Chapter 296-63 WAC
RIGHT TO KNOW FEE ASSESSMENT

WAC

296-63-001	Purpose and scope.
296-63-003	Definitions.
296-63-005	Selected industries.
296-63-007	Fee assessment.
296-63-009	Exemption requests.
296-63-011	Fraudulent exemption requests.
296-63-013	Appeals.
296-63-015	Fee assessment not received.

WAC 296-63-001 Purpose and scope. This chapter establishes a fee assessment under the Worker and Community Right to Know Act in accordance with RCW 49.70.170.

[Statutory Authority: RCW 49.17.040 and 49.17.050. 86-23-003 (Order 86-38), § 296-63-001, filed 11/6/86.]

WAC 296-63-003 Definitions. Unless the context clearly requires otherwise, the definitions of this section shall apply throughout this chapter.

(1) "Department" means the department of labor and industries.

(2) "Director" means the director of the department of labor and industries or his/her designee.

[Statutory Authority: RCW 49.17.040 and 49.17.050. 86-23-003 (Order 86-38), § 296-63-003, filed 11/6/86.]

WAC 296-63-005 Selected industries. Fees shall only be assessed to employers engaged in business operations having a standard industrial classification, as designated in the standard industrial classification manual prepared by the federal Office of Management and Budget, within the following major groups:

(1) Numbers 01 through 08 (agriculture and forestry industries).

(2) Numbers 10 through 14 (mining industries).

(3) Numbers 15 through 17 (construction industries).

(4) Numbers 20 through 39 (manufacturing industries).

(5) Numbers 41, 42, and 44 through 49 (transportation, communications, electric, gas, and sanitary services).

(6) Number 75 (automotive repair services, and garages).

(7) Number 76 (miscellaneous repair services).

(8) Number 80 (health services).

(9) Number 82 (educational services).

[Statutory Authority: RCW 49.17.040 and 49.17.050. 86-23-003 (Order 86-38), § 296-63-005, filed 11/6/86.]

WAC 296-63-007 Fee assessment. (1) The department shall assess an annual fee to each employer in the selected industries identified in WAC 296-63-003.

(2) The fee shall only be assessed to employers who reported ten thousand four hundred or more worker hours to the department.

(3) The fee assessment shall be based on reported worker hours for the prior calendar year.

(4) One full-time equivalent employee is equal to two thousand eighty worker hours.

(5) The fee assessment shall be two dollars and fifty cents for each full-time equivalent employee. Any fraction of a full-time equivalent employee shall be counted as one full-time equivalent employee.

(6) The annual fee shall not exceed fifty thousand dollars for an individual employer.

(7) All fees collected by the department shall be deposited in the worker and community right to know fund.

[Statutory Authority: RCW 49.17.040 and 49.17.050. 86-23-003 (Order 86-38), § 296-63-007, filed 11/6/86.]

WAC 296-63-009 Exemption requests. (1) Employers who do not have hazardous chemicals at their workplace may submit a written request for exemption to the department. Submission of an exemption request does not relieve an employer of his/her obligation to pay the fee assessment until such time as the request is approved. Employers granted exemptions will be removed from the listing of employers to be assessed a fee beginning with the current billing period.

(2) Exemptions shall only be considered for an employer's entire workplace consisting of all activities reported to the department under the same employer identification number.

(3) Each request for exemption must contain the following information:

(a) Firm name and employer identification number;

(b) Complete mailing address;

(c) Complete location (such as street) address;

(d) A certified statement in the form required by RCW 9A.72.085 that a hazardous chemical survey of the employer's premises has been completed by a qualified person, the identity and qualifications of the person completing the survey, and that no hazardous chemicals as defined by WAC 296-800-170 are present at the workplace.

(4) The department may schedule an on-site inspection to determine the validity of the exemption request.

(5) The employer shall provide to the department within five working days of receiving a request from the department, any additional information identified by the department as necessary for evaluating the exemption request.

(6) Exemption requests shall be mailed to:

Right to Know Program
Department of Labor and Industries
P.O. Box 44620
Olympia, Washington 98504-4620

[Statutory Authority: RCW 49.17.010, [49.17].040, and [49.17].050. 01-11-038, § 296-63-009, filed 5/9/01, effective 9/1/01. Statutory Authority: RCW 49.70.170 and 49.17.040. 98-02-029, § 296-63-009, filed 12/31/97, effective 1/31/98. Statutory Authority: RCW 49.17.040 and 49.17.050. 86-23-003 (Order 86-38), § 296-63-009, filed 11/6/86.]

WAC 296-63-011 Fraudulent exemption requests. (1) The department may assess a civil penalty against any employer who submits a fraudulent exemption request. Such penalty assessment shall be consistent with RCW 49.17.180 (1), and shall not exceed seventy thousand dollars.

(2) In addition, the director may cause a record of such fraudulent exemptions submission to be referred to the prosecuting attorney of the county wherein such submission occurred.

[Statutory Authority: Chapter 49.17 RCW. 91-24-017 (Order 91-07), § 296-63-011, filed 11/22/91, effective 12/24/91. Statutory Authority: RCW

49.17.040 and 49.17.050. 86-23-003 (Order 86-38), § 296-63-011, filed 11/6/86.]

WAC 296-63-013 Appeals. An employer may appeal the fee assessment or penalties in accordance with RCW 49.70.170(4).

[Statutory Authority: RCW 49.17.040 and 49.17.050. 86-23-003 (Order 86-38), § 296-63-013, filed 11/6/86.]

WAC 296-63-015 Fee assessment not received. When fee assessments are not received by the department, penalties shall be assessed to the delinquent employer in accordance with chapter 49.70 RCW and RCW 49.70.177.

[Statutory Authority: RCW 49.17.040 and 49.17.050. 86-23-003 (Order 86-38), § 296-63-015, filed 11/6/86.]

Chapter 296-65 WAC
ASBESTOS REMOVAL AND ENCAPSULATION

WAC

296-65-001	Purpose and scope.
296-65-003	Definitions.
296-65-005	Asbestos worker training course content.
296-65-007	Asbestos supervisor training course content.
296-65-010	Asbestos worker certification.
296-65-012	Asbestos supervisor certification.
296-65-015	Training course approval.
296-65-017	Contractor certification.
296-65-020	Notification requirements.
296-65-025	Fees.
296-65-030	Methods of compliance.
296-65-035	Reciprocity.
296-65-050	Denial, suspension, and revocation of certificates.

DISPOSITION OF SECTIONS FORMERLY CODIFIED IN THIS CHAPTER

296-65-040	Appeals—Notice and filing. [Statutory Authority: RCW 49.17.050(2) and 49.17.040. 87-10-008 (Order 87-06), § 296-65-040, filed 4/27/87. Statutory Authority: SSB 4209, 1985 c 387. 85-21-080 (Order 85-30), § 296-65-040, filed 10/22/85.] Repealed by 87-24-051 (Order 87-24), filed 11/30/87. Statutory Authority: Chapter 49.17 RCW.
296-65-045	Appeals—Procedure. [Statutory Authority: SSB 4209, 1985 c 387. 85-21-080 (Order 85-30), § 296-65-045, filed 10/22/85.] Repealed by 87-24-051 (Order 87-24), filed 11/30/87. Statutory Authority: Chapter 49.17 RCW.

WAC 296-65-001 Purpose and scope. This standard regulates asbestos removal and encapsulation, requires contractor certification, specifies minimum training for supervisors and workers on asbestos projects, requires notification of asbestos projects, and establishes a training course approval program. This standard applies to the removal or encapsulation of any materials containing more than one percent asbestos.

[Statutory Authority: RCW 49.17.040, [49.17.]050 and [49.17.]060. 97-19-014, § 296-65-001, filed 9/5/97, effective 11/5/97. Statutory Authority: Chapter 49.17 RCW. 89-21-018 (Order 89-10), § 296-65-001, filed 10/10/89, effective 11/24/89. Statutory Authority: SSB 4209, 1985 c 387. 85-21-080 (Order 85-30), § 296-65-001, filed 10/22/85.]

WAC 296-65-003 Definitions. Unless the context clearly requires otherwise, the definitions in this section apply throughout this standard.

"Approved" means approved by the department.

"Asbestos" includes chrysotile, amosite, crocidolite, tremolite asbestos, anthophyllite asbestos, and actinolite asbestos, and any of these minerals that have been chemically treated and/or altered.

"Asbestos fiber" means asbestos fiber as defined in WAC 296-62-07703 as "fiber."

"Asbestos abatement project" means an asbestos project involving three square feet or three linear feet, or more, of asbestos containing material.

"Asbestos project" includes the construction, demolition, repair, remodeling, maintenance or renovation of any public or private building or structure, mechanical piping equipment or system involving the demolition, removal, encapsulation, salvage, or disposal of material or outdoor activity releasing or likely to release asbestos fibers into the air.

"Certified asbestos contractor" means any partnership, firm, association, corporation or sole proprietorship, registered under chapter 18.27 RCW, that submits a bid, or contracts to remove or encapsulate asbestos for another and is certified by the department to remove or encapsulate asbestos.

"Certificate" means a certificate issued by the department that shall include the name of person awarded the certificate, certificate number, the discipline for which certification was conferred, training and examination dates, the course provider's name and address, and the course provider's telephone number, expiration date, and a statement that the person receiving the certificate has completed the training for asbestos accreditation under TSCA Title II.

"Certified asbestos supervisor" means an individual who is certified by the department under WAC 296-65-012.

"Certified asbestos worker" means an individual certified by the department under WAC 296-65-010.

"Department" means the department of labor and industries.

"Demolition" means the activity of razing a structure which includes the wrecking, removal, or dismantling of any load-supporting structural member of any facility including any related handling operations.

"Director" means the director of the department of labor and industries or the director's designee.

"Emergency project" means a project that was not planned but results from a sudden, unexpected event and does not include operations that are necessitated by nonroutine failures of equipment or systems.

"Encapsulation" means the application of an encapsulant to asbestos containing materials to control the release of asbestos fibers into the air. The encapsulation process either creates a membrane over the surface (bridging encapsulant) or penetrates the material and binds its components together (penetrating encapsulant).

"EPA MAP" means the environmental protection agency model accreditation plan for asbestos requirements in 40 CFR Part 763.

"HEPA filtration" means high-efficiency particulate air filtration found in respirators and vacuum systems capable of filtering 0.3 micron particles with 99.97% efficiency.

"Intact" means that the asbestos containing material has not crumbled, been pulverized, or otherwise deteriorated so that it is no longer likely to be bound with its matrix.

"NESHAP" means the National Emission Standards for Hazardous Air Pollutants.

"Owner" means the person who owns any public or private building, structure, facility, or mechanical system, or the remnants thereof, or the agent of such person, but does not include individuals who work on asbestos projects in their own single-family residences, no part of which is used for commercial purposes.

"Person" means any individual, partnership, firm, association, corporation, sole proprietorship, or the state of Washington or its political subdivisions.

"Revocation" means a permanent withdrawal of a certification issued by the department.

"Suspension" means a temporary withdrawal of a certification issued by the department. No suspension shall be less than six months or longer than one year.

[Statutory Authority: RCW 49.17.010, [49.17].040, [49.17].050, and 49.26.130. 00-06-075, § 296-65-003, filed 3/1/00, effective 4/10/00. Statutory Authority: RCW 49.17.040, 49.17.050, 49.26.040 and 49.26.130. 99-17-026, § 296-65-003, filed 8/10/99, effective 11/10/99. Statutory Authority: RCW 49.17.040, [49.17.]050 and [49.17.]060. 96-05-056, § 296-65-003, filed 2/16/96, effective 4/1/96. Statutory Authority: Chapter 49.17 RCW. 89-21-018 (Order 89-10), § 296-65-003, filed 10/10/89, effective 11/24/89; 87-24-051 (Order 87-24), § 296-65-003, filed 11/30/87. Statutory Authority: SSB 4209, 1985 c 387. 85-21-080 (Order 85-30), § 296-65-003, filed 10/22/85.]

WAC 296-65-005 Asbestos worker training course content. An approved asbestos worker training course shall consist of four days of training with a minimum of thirty-two hours. This initial training course shall provide, at a minimum, information on the following topics:

(1) The physical characteristics of asbestos including types, fiber size, aerodynamic characteristics and physical appearance.

(2) Examples of different types of asbestos and asbestos-containing materials. Real asbestos shall be used only for observation by trainees and shall be enclosed in sealed unbreakable containers.

(3) The health hazards of asbestos including the nature of asbestos related diseases, routes of exposure, dose-response relationships, synergism between cigarette smoking and asbestos exposure, latency period of diseases, hazards to immediate family, and the health basis for asbestos standards.

(4) Employee personal protective equipment including the classes and characteristics of respirator types, limitations of respirators, proper selection, inspection, donning, use, maintenance and storage procedure, methods for field checking of the facepiece-to-face seal (positive and negative-pressure checks), qualitative and quantitative fit testing procedures, variability between field and laboratory protection factors, factors that alter respirator fit (e.g., eye glasses and facial hair), the components of a proper respiratory protection program, respirator program administrator, requirements on oil lubricated reciprocating piston compressors for breathing air, and selection and use of personal protective clothing. Qualitative or quantitative fit testing shall be performed on at least one student for demonstration purposes and in accordance with WAC 296-62-07715 and 296-62-07739.

(5) Use, storage and handling of launderable clothing, nonslip footwear, gloves, eye protection and hard hats.

(6) Medical monitoring procedures and requirements, including the provisions of WAC 296-62-071 through 296-62-07121 and 296-62-07725, any additional recommended procedures and tests, benefits of medical monitoring and employee access to records.

(7) Air monitoring procedures and requirements specified in WAC 296-62-07709, including a description of equipment, sampling methods and strategies, reasons for air monitoring, types of samples, including area, personal and clearance samples, current standards with proposed changes if any, employee observation and notification, recordkeeping and employee access to records, interpretation of air monitoring results, and analytical methods for bulk and air samples.

(8) State-of-the-art work practices for asbestos removal and encapsulation activities including purpose, proper construction and maintenance of barriers and decontamination enclosure systems, posting of warning signs, electrical and ventilation system lock-out, proper working techniques and tools with vacuum attachments for minimizing fiber release, use of wet methods and surfactants, use of negative-pressure ventilation equipment for minimizing employee exposure to asbestos fibers and contamination prevention, scoring and breaking techniques for rigid asbestos products, glove bag techniques, recommended and prohibited work practices, potential exposure situations, emergency procedures for sudden releases, use of HEPA vacuums and proper clean-up and disposal procedures. Work practice requirements for removal, encapsulation, enclosure, repair, and waste transportation shall be discussed individually. Appropriate work practices for both indoor and outdoor asbestos projects shall be included.

(9) Personal hygiene including entry and exit procedures for the work area, use of showers and prohibition of eating, drinking, smoking and chewing (gum or tobacco) in the work area. Potential exposures, such as family exposure shall also be included.

(10) Additional safety hazards that may be encountered during asbestos removal and encapsulation activities and hazard abatement, including electrical hazards, scaffold and ladder hazards, slips, trips and falls, confined spaces, noise, and heat stress.

(11) The requirements, procedures and standards established by:

(a) The Environmental Protection Agency, 40 CFR Part 61, Subparts A and M, and 40 CFR Part 763.

(b) Washington state department of ecology.

(c) Local air pollution control agencies.

(d) Washington state department of labor and industries, division of industrial safety and health, chapter 49.17 RCW (Washington Industrial Safety and Health Act), chapter 49.26 RCW (Health and safety—Asbestos), and ensuing regulations.

(12) Actual worksite considerations.

(13) The instruction required by this section shall include, at a minimum fourteen hours of hands-on training for the following:

(a) Glove bag techniques;

(b) The opportunity to don respirators including half facepiece and full facepiece air purifying respirators, powered air purifying respirators (PAPR), and Type-C supplied-air respirators;

(c) Removal of sprayed-on or troweled-on material, and pipe lagging;

(d) Basic construction of a decontamination unit, and proper entry and exit;

(e) Suit-up in protective clothing consisting of coveralls, foot coverings and head coverings.

(14) Course review, a review of the key aspects of the training course.

(15) Asbestos-containing materials shall not be used for hands-on training.

(16) In recognition that asbestos abatement is an evolving industry, the department reserves the right to require additional subjects to be taught and to specify the amount of time which shall be allotted to adequately cover required subjects. To assure adequate coverage of required material, each sponsor shall be provided and required to incorporate into the training course, a detailed outline of subject matter developed by the department.

[Statutory Authority: RCW 49.17.040, [49.17.]050 and [49.17.]060. 96-05-056, § 296-65-005, filed 2/16/96, effective 4/1/96. Statutory Authority: Chapter 49.17 RCW. 89-21-018 (Order 89-10), § 296-65-005, filed 10/10/89, effective 11/24/89; 87-24-051 (Order 87-24), § 296-65-005, filed 11/30/87. Statutory Authority: RCW 49.17.050(2) and 49.17.040. 87-10-008 (Order 87-06), § 296-65-005, filed 4/27/87. Statutory Authority: SSB 4209, 1985 c 387. 85-21-080 (Order 85-30), § 296-65-005, filed 10/22/85.]

WAC 296-65-007 Asbestos supervisor training course content. An approved asbestos supervisor training course shall consist of at least five days of training. This initial training course shall include lectures, demonstrations, at least fourteen hours of hands-on training, course review and a written examination. Audio-visual materials, where appropriate, are recommended to complement lectures. The training course shall provide, at a minimum, information on the following topics:

(1) The physical characteristics of asbestos and asbestos-containing materials including identification of asbestos, aerodynamic characteristics, typical uses, physical appearance, hazard assessment considerations, and a summary of abatement control options.

(2) Health effects related to asbestos exposure including the nature of asbestos related diseases, routes of exposure, dose-response relationships and the lack of a safe level of exposure, synergism between asbestos exposure and cigarette smoking, latency period, hazards to the immediate family and the health basis for the standard.

(3) Employee personal protective equipment including the classes and characteristics of respirator types, limitations of respirators, proper selection, inspection, donning, use, maintenance, and storage procedures, methods for field checking of the facepiece-to-face seal (positive and negative pressure checks), variability between field and laboratory protection factors, quantitative and qualitative fit test requirements, factors that alter respirator fit (facial hair, scars, etc.), the components of a proper respirator program, requirements for oil lubricated reciprocating compressors, maintenance of Type-C systems, standards for breathing air, selection and use of personal protective clothing, use, storage, and handling of nondisposable clothing, and regulations covering personal protective equipment.

(4) State-of-the-art work practices for asbestos removal and encapsulation activities including purpose, proper construction and maintenance of barriers and decontamination enclosure systems, posting of warning signs, electrical and ventilation system lock-out, proper working techniques and tools with vacuum attachments for minimizing fiber release, use of wet methods and surfactants, use of negative-pressure ventilation equipment for minimizing employee exposure to asbestos fibers and contamination prevention, scoring and breaking techniques for rigid asbestos products, glove bag techniques, recommended and prohibited work practices, potential exposure situations, emergency procedures for sudden releases, use of HEPA vacuums and proper clean-up and disposal procedures. Work practice requirements for removal, encapsulation, and repair shall be discussed separately. Appropriate work practices for both indoor and outdoor asbestos projects shall be included.

(5) Personal hygiene including entry and exit procedures for the work area, use of showers and prohibition of eating, drinking, smoking, and chewing (gum and tobacco) in the work area. Potential exposures, such as family exposure shall also be included.

(6) Additional safety hazards that may be encountered during asbestos abatement activities and how to deal with them, including electrical hazards, heat stress, air contaminants other than asbestos, fire and explosion hazards, scaffold and ladder hazards, slips, trips, and falls, confined space entry requirements, and noise hazards.

(7) Medical monitoring procedures and requirements, including the provisions of WAC 296-62-071 through 296-62-07121 and 296-62-07725, any additional recommended procedures and tests, benefits of medical monitoring and recordkeeping requirements.

(8) Air monitoring procedures and requirements specified in WAC 296-62-07709, including a description of equipment, sampling methods and strategies, reasons for air monitoring, types of samples, including area, personal and clearance samples, a description of aggressive sampling, current standards with proposed changes if any, employee observation and notification, recordkeeping, interpretation of air monitoring results, specifically from analyses performed by polarized light, phase contrast, and electron microscopy.

(9) The requirements, procedures, and standards established by:

(a) The Environmental Protection Agency, 40 CFR Part 61, Subparts A and M, and 40 CFR Part 763.

(b) The Washington state department of ecology.

(c) Local air pollution control agencies.

(d) Washington state department of labor and industries, division of industrial safety and health, chapter 49.17 RCW (Washington Industrial Safety and Health Act), chapter 49.26 RCW (Health and safety—Asbestos), and ensuing regulations.

(10) Actual worksite considerations.

(11) Insurance and liability issues including contractor issues, industrial insurance coverage and exclusions, third party liabilities and defenses, private insurance coverage and exclusions, recordkeeping recommended for legal and insurance purposes.

(12) Supervisory techniques for asbestos abatement projects including supervisory practices to enforce and reinforce the required work practices and discourage unsafe work practices.

(13) Contract specifications including a discussion of the key elements to be included in contract specifications.

(14) A minimum of fourteen hours of hands-on training for the following:

(a) Calibration of air-sampling equipment;

(b) Routine maintenance of air-purifying and air-supplied respirators;

(c) Setup of a decontamination unit including calculating the number of negative air machines needed as well as proper placement of the machines within the enclosure; and

(d) Quantitative and qualitative fit-testing protocols.

(15) Course review, a review of the key aspects of the training course.

(16) In recognition that asbestos abatement is an evolving industry, the department reserves the right to require additional subjects to be taught and to specify the amount of time which shall be allotted to adequately cover required subjects. To assure adequate coverage of required material, each sponsor shall be provided and required to incorporate into their training course, a detailed outline of subject matter developed by the department.

[Statutory Authority: RCW 49.17.040, [49.17.]050 and [49.17.]060. 96-05-056, § 296-65-007, filed 2/16/96, effective 4/1/96. Statutory Authority: Chapter 49.17 RCW. 89-21-018 (Order 89-10), § 296-65-007, filed 10/10/89, effective 11/24/89.]

WAC 296-65-010 Asbestos worker certification. (1) For the purposes of this section "individual" means any natural person.

(2) To qualify for an asbestos worker certificate, an individual must do the following:

(a) Successfully complete an approved asbestos worker training course;

(b) Achieve a score of at least seventy percent on a one hundred question multiple choice closed book examination approved by the department but administered by the training course sponsor. If an individual does not pass the examination, then another examination (meeting the above criteria) may be given after a sufficient period of study. The new examination must not duplicate more than fifty percent of the questions used on prior examinations;

(c) Submit to the department a timely application validated by an approved training course sponsor. To be considered timely, an application must be received by the department no later than sixty days after the completion of the course. In the event that an application is not timely, the individual will be required to pass, with a score of at least seventy percent, an examination administered by the department. A nonrefundable fifty-dollar fee will be assessed when the application is submitted to the department; and

(d) Pay the fee prescribed in WAC 296-65-025.

(3) Individuals must not perform any asbestos project work prior to issuance of the certificate.

(4) Certificates will be issued and mailed to the individual applicants and will be valid for one year from the date of issuance.

(5) Certified asbestos workers shall attend an eight-hour worker refresher course prior to certificate renewal.

(a) The course shall, at a minimum, adequately review the subjects required by WAC 296-65-005, update information on state-of-the-art procedures and equipment, and review regulatory changes and interpretations. The department may require specific subjects.

(b) An application for renewal of the certificate must be validated by the refresher training course instructor.

(c) The refresher course must be taken prior to expiration of the certificate.

(d) The department must receive the certificate renewal application no later than the expiration date of the current certificate. Applicants missing this renewal deadline will be required to pass, with a score of seventy percent, an examination administered by the department. A nonrefundable fifty-dollar fee will be charged to take this examination.

(e) Individuals whose certificates have been expired for more than six months will be required to retake the entire basic worker course.

(6) The initial TSCA Title II worker accreditation certificate and the current worker certificate must be available for inspection at all times at the location of the asbestos project.

(7) The department may suspend or revoke a certificate as provided in WAC 296-65-050 and chapter 296-350 WAC.

[Statutory Authority: RCW 49.17.040, 49.17.050, 49.26.040 and 49.26.130. 99-17-026, § 296-65-010, filed 8/10/99, effective 11/10/99. Statutory Authority: RCW 49.17.040, [49.17.]050 and [49.17.]060. 96-05-056, § 296-65-010, filed 2/16/96, effective 4/1/96. Statutory Authority: Chapter 49.17 RCW. 89-21-018 (Order 89-10), § 296-65-010, filed 10/10/89, effective 11/24/89. Statutory Authority: SSB 4209, 1985 c 387. 85-21-080 (Order 85-30), § 296-65-010, filed 10/22/85.]

WAC 296-65-012 Asbestos supervisor certification. (1) For the purposes of this section, "individual" means any natural person.

(2) To qualify for an asbestos supervisor certificate, an individual must meet the following criteria:

(a) Have at least 1600 hours of experience in one or more of the following disciplines:

(i) Asbestos abatement;

(ii) Asbestos project design;

(iii) Consultation on asbestos abatement projects;

(iv) Operations and maintenance program supervision;

(v) Construction project supervision;

(b) Successfully complete an approved asbestos supervisor training course;

(c) Achieve a score of at least seventy percent on a one hundred question multiple choice closed book examination approved by the department but administered by the training course sponsor. If an individual does not pass the examination, then another examination (meeting the above criteria) may be given after a sufficient period of study. The new examination must not duplicate more than fifty percent of the questions used on prior examinations;

(d) Submit to the department a timely application validated by an approved training course sponsor. To be considered timely, an application must be received by the department no later than sixty days after the completion of the course. In the event that an application is not timely, the individual will be required to pass, with a score of at least seventy percent, an examination administered by the department. A nonrefundable fifty-dollar fee will be assessed when the application is submitted to the department; and

(e) Pay the fee prescribed in WAC 296-65-025.

(3) An individual must not supervise any asbestos project prior to issuance of the certificate.

(4) Certificates will be issued and mailed to the individual applicants and will be valid for one year from the date of issuance.

(5) A certified asbestos supervisor must attend an eight-hour supervisor refresher course prior to certificate renewal. It is not necessary to also take a worker refresher course.

(a) The course must, at a minimum, adequately review the subjects required by WAC 296-65-007, update information on state-of-the-art procedures and equipment, and review regulatory changes and interpretations. The department may require specific subjects.

(b) An application for renewal of the certificate must be validated by the refresher training course instructor.

(c) The refresher course must be taken prior to expiration of the certificate.

(d) The department must receive the certificate renewal application no later than the expiration date of the current certificate. Applicants missing this renewal deadline will be required to pass, with a score of seventy percent, an examination administered by the department. A nonrefundable fifty-dollar fee will be charged to take this examination.

(e) Individuals whose certificates have been expired for more than six months will be required to retake the entire basic supervisor course.

(6) The initial TSCA Title II supervisor accreditation certificate and the current supervisor certificate must be available for inspection at all times at the location of the asbestos project.

(7) The department may suspend or revoke a certificate as provided in WAC 296-65-050 and chapter 296-350 WAC.

[Statutory Authority: RCW 49.17.040, 49.17.050, 49.26.040 and 49.26.130. 99-17-026, § 296-65-012, filed 8/10/99, effective 11/10/99. Statutory Authority: RCW 49.17.040, [49.17.]050 and [49.17.]060. 96-05-056, § 296-65-012, filed 2/16/96, effective 4/1/96. Statutory Authority: Chapter 49.17 RCW. 89-21-018 (Order 89-10), § 296-65-012, filed 10/10/89, effective 11/24/89.]

WAC 296-65-015 Training course approval. (1) Basic and refresher asbestos training courses may be sponsored by any individual, person, or other entity having department approval. Approval shall be contingent on the sponsor's compliance, as applicable, with licensing requirements established by the state board of vocational education.

(2) Prior to receiving department approval, each course shall be evaluated by the department for the breadth of knowledge and experience required to properly train asbestos workers or supervisors. Course content shall be carefully scrutinized for adequacy and accuracy. Training techniques will be evaluated by the department.

(3) Sponsors of basic and refresher training courses proposed for approval must submit:

(a) Background information about course sponsors;

(b) Course locations and fees;

(c) Copies of course handouts;

(d) A detailed description of course content and the amount of time allotted to each major topic;

(e) A description of teaching methods to be utilized and a list of all audio-visual materials; the department may, in its discretion, request that copies of the materials be provided for review. Any audio-visual materials provided to the department will be returned to the applicant;

(f) A list of all personnel involved in course preparation and presentation and a description of the background, special training and qualifications of each. Instructors shall have academic and/or field experience in asbestos abatement. The department may, in its discretion, require proposed instructors to pass an examination on subjects related to their respective topics of instruction;

(g) A description of student evaluation methods and a copy of the required written examination including the scoring methodology to be used in grading the examination;

(h) A description of course evaluation methods;

(i) Any restrictions on attendance (language, class size, affiliation, etc.);

(j) A list of any other states that currently approve the training course;

(k) A letter from the course provider that clearly indicates how the course provider meets the EPA MAP requirements; and

(l) The amount and type of hands-on training for initial training courses.

(4) Application for training course approval and course materials shall be submitted to the department at least sixty days prior to the requested approval date. Materials may be mailed to:

Asbestos Certification Program
Department of Labor and
Industries
P.O. Box 44614
Olympia, Washington 98504-4614

(5) The decision to grant or renew approval of a basic or refresher asbestos training course shall be in the sole discretion of the department.

Following approval of a basic or refresher asbestos training course, the department will issue the course sponsor an approval which is valid for one year from the date of issuance. Application for renewal must follow the procedures described in subsections (3) and (4) of this section.

Following approval of a basic or refresher asbestos training course, in recognition that asbestos abatement is an evolving industry, the department reserves the right to require additional subjects to be taught and to specify the amount of time which shall be allotted to adequately cover required subjects. To assure adequate coverage of required material, each sponsor shall be provided and required to incorporate into their training course, a detailed outline of subject matter developed by the department.

(6) To be considered timely, the training course approval renewal must be received by the department no later than thirty days before the certificate expiration date.

(7) Any changes to a training course must be approved by the department in advance.

(8) The course sponsor shall provide the department with a list of all persons who have completed a basic or refresher training course. The list must be provided no later than ten days after a course is completed and must include the name and address of each trainee.

(9) The course sponsor must notify the department, in writing, at least fourteen days before a training course is

scheduled to begin. The notification must include the date, time and address where the training will be conducted.

(10) A representative of the department may, at the department's discretion, attend a training course as an observer to verify that the training course is conducted in accordance with the program approved by the department.

(11) Course sponsors conducting training outside the state of Washington shall reimburse the department for reasonable travel expenses associated with department audits of the training courses. Reasonable travel expenses are defined as current state of Washington per diem and travel allowance rates including airfare and/or surface transportation rates. Such reimbursement shall be paid within thirty days of receipt of the billing notice.

(12) The training course sponsor shall limit each class to a maximum of thirty participants.

(13) The instructor to student ratio shall not exceed one-to-ten for any of the training required by WAC 296-65-005(13) and 296-65-007(14).

(14) The department may terminate the training course approval, if in the department's judgment the sponsor fails to maintain the course content and quality as initially approved, or fails to make changes to a course as required by WAC 296-65-015(5). The minimum criteria for withdrawal of training course approval shall include:

(a) Misrepresentation of the extent of training courses approval by a state or EPA;

(b) Failure to submit required information or notification in a timely manner;

(c) Failure to maintain requisite records;

(d) Falsification of accreditation records, instructor qualifications, or other accreditation information; or

(e) Failure to adhere to the training standards and accreditation requirements of chapter 296-65 WAC.

(15) Any "notice of termination of training course approval" issued by the department may act as an order of immediate restraint as described by RCW 49.17.130.

(16) Recordkeeping requirements for training providers: All approved providers of accredited asbestos training courses must comply with the following minimum recordkeeping requirements:

(a) Training course materials. A training provider must retain copies of all instructional materials used in delivery of the classroom training such as student manuals, instructor notebooks and handouts.

(b) Instructor qualifications. A training provider must retain copies of all instructors' resumes, and the documents approving each instructor issued by either EPA or the department. Instructors must be approved by the department before teaching courses for accreditation purposes. A training provider must notify the department in advance whenever it changes course instructors. Records must accurately identify the instructors that taught each particular course for each date that a course is offered.

(c) Examinations. A training provider must document that each person who receives an accreditation certificate for an initial training course has achieved a passing score on the examination. These records must clearly indicate the date upon which the exam was administered, the training course and discipline for which the exam was given, the name of the person who proctored the exam, a copy of the exam, and the name and test score of each person taking the exam. The topic and dates of the training course must correspond to those listed on that person's accreditation certificate.

(d) Accreditation certificates. The training providers shall maintain records that document the names of all persons who have been awarded certificates, their certificate numbers, the disciplines for which accreditation was conferred, training and expiration dates, and the training location. The training provider shall maintain the records in a manner that allows verification by telephone of the required information.

(e) Verification of certificate information. Training providers of refresher training courses shall confirm that their students possess valid accreditation before granting course admission.

(f) Records retention and access.

(i) The training provider shall maintain all required records for a minimum of three years. The training provider, however, may find it advantageous to retain these records for a longer period of time.

(ii) The training provider must allow reasonable access to all of the records required by the MAP, and to any other records which may be required by the department for the approval of asbestos training providers or the accreditation of asbestos training courses, to both EPA and to the department, on request.

(iii) If a training provider ceases to conduct training, the training provider shall notify the department and give it the opportunity to take possession of that provider's asbestos training records.

(17) A representative of the department may, at the department's discretion, provide an examination as a substitution to the examination administered by the training course provider. The examination replacement will be used to verify that the training course is conducted in accordance with the program approved by the department.

[Statutory Authority: RCW 49.17.040, [49.17.]050 and [49.17.]060. 97-01-079, § 296-65-015, filed 12/17/96, effective 3/1/97; 96-05-056, § 296-65-015, filed 2/16/96, effective 4/1/96. Statutory Authority: Chapter 49.17 RCW. 89-21-018 (Order 89-10), § 296-65-015, filed 10/10/89, effective 11/24/89; 87-24-051 (Order 87-24), § 296-65-015, filed 11/30/87. Statutory Authority: RCW 49.17.050(2) and 49.17.040. 87-10-008 (Order 87-06), § 296-65-015, filed 4/27/87. Statutory Authority: SSB 4209, 1985 c 387. 85-21-080 (Order 85-30), § 296-65-015, filed 10/22/85.]

WAC 296-65-017 Contractor certification. (1) In order to obtain certification, an asbestos contractor must submit an application to the department. The application shall provide the following information:

(a) A list of asbestos projects conducted by the contractor during the previous twelve months. Such list shall include for each project:

(i) Project name;

(ii) Location;

(iii) Brief description;

(iv) Identity of any citations or enforcement actions issued for violations of asbestos regulations by any local, state, or federal jurisdiction relative to each individual project; and

(v) Name of the on-site project manager or supervisor.

(b) A list of asbestos supervisors (include certification number) working for the company.

(c) A statement certifying that the contractor has read and understands all applicable Washington state rules and regulations regarding asbestos abatement and will comply with them.

(d) A statement certifying that the applicant contractor's asbestos license or accreditation issued by any other state or jurisdiction has not been revoked, suspended, or denied by that state or jurisdiction.

(2) Upon approval, the department will issue the contractor a certificate. Denial of approval shall be in writing.

(3) Certificates shall be valid for a period of twelve months. Certificates may be extended during department review of a renewal application.

Note: In circumstances where it is necessary to coordinate an expiration date with the date of expiration of a contractor registration issued under chapter 18.27 RCW, certificates may be valid for less than one year. In such circumstances, the certificate fee prescribed in WAC 296-65-025 shall be prorated accordingly for the initial application only.

(4) The application for certificate renewal shall contain the information specified in subsection (1) of this section.

(5) Applications for renewal must be received by the department not less than sixty days before the certificate expires.

(6) The department may suspend or revoke the certificate as provided in WAC 296-65-050 and chapter 296-350 WAC.

[Statutory Authority: Chapter 49.17 RCW. 89-21-018 (Order 89-10), § 296-65-017, filed 10/10/89, effective 11/24/89.]

WAC 296-65-020 Notification requirements. (1) Before any person or individual begins an asbestos project as defined in WAC 296-62-07722 and 296-65-003 involving more than forty-eight square feet or ten linear feet, unless the surface area of the pipe is greater than forty-eight square feet, of asbestos containing material, written notification must be provided to the department. Notices must include:

(a) Name and address of the owner and contractor.

(b) Description of the facility including size, age, and prior use of the facility.

(c) Amount of asbestos-containing material to be removed or encapsulated.

(d) Location of the facility.

(e) Exact starting and completion dates of the asbestos project, including shifts during which abatement work will be accomplished. These dates must correspond to the dates specified for asbestos removal in the contract. Any change in these dates or work shifts must be communicated to the department by an amended notice filed at the office where the original notice was filed.

• When the starting date or time changes, the amended notice must be filed no later than 5:00 p.m. on the business day prior to the starting date in the original notice and prior to the new starting date.

• When the completion date or time changes, the amended notice must be filed before completion of the project, and within eight hours from when the person learns that the change will occur.

Notice may be filed by facsimile (fax).

(f) Nature of the project and methods used to remove or encapsulate the material.

(2) Notices must be received by the department no later than ten days prior to the start of the project. Notices must be sent directly to the department of labor and industries regional office having jurisdiction on the project.

(3) The director may waive the prenotification requirement upon written request of an owner for large-scale, ongoing projects. In granting such a waiver, the director will require the owner to provide prenotification if significant changes in personnel, methodologies, equipment, work site, or work procedures occur or are likely to occur. The director will further require annual resubmittal of such notification.

(4) The director, upon review of an owner's reports, work practices, or other data available as a result of inspections, audits, or other authorized activities, may reduce the size threshold for prenotification required by this section. Such a change will be based on the director's determination that significant problems in personnel, methodologies, equipment, work site, or work procedures are creating the potential for violations of this chapter.

(5) Emergency projects which disturb or release asbestos into the air must be reported to the department within three working days after commencement of the project in the manner otherwise required under this chapter. The employees, the employees' collective bargaining representative or employee representative, if any, and other persons at the project area must be notified of the emergency as soon as possible by the person undertaking the emergency project. A notice describing the nature of the emergency project must be clearly posted adjacent to the work area.

(6) Incremental phasing in the conduct or design of asbestos projects or otherwise conducting or designing asbestos projects of a size less than the threshold exemption specified in subsection (1) of this section, with the intent of avoiding the notification requirements, is a violation of this chapter.

[Statutory Authority: RCW 49.17.040, 49.17.050, 49.26.040 and 49.26.130. 99-17-026, § 296-65-020, filed 8/10/99, effective 11/10/99. Statutory Authority: RCW 49.17.040, [49.17.]050 and [49.17.]060. 96-05-056, § 296-65-020, filed 2/16/96, effective 4/1/96. Statutory Authority: Chapter 49.17 RCW. 89-21-018 (Order 89-10), § 296-65-020, filed 10/10/89, effective 11/24/89; 87-24-051 (Order 87-24), § 296-65-020, filed 11/30/87. Statutory Authority: RCW 49.17.050(2) and 49.17.040. 87-10-008 (Order 87-06), § 296-65-020, filed 4/27/87. Statutory Authority: SSB 4209, 1985 c 387. 85-21-080 (Order 85-30), § 296-65-020, filed 10/22/85.]

WAC 296-65-025 Fees. (1) A nonrefundable administrative fee of twenty-five dollars will be assessed for each initial, replacement, or renewal asbestos worker certificate application. The fee (check or money order) must accompany the certificate application and be made payable to the department. An application form may be obtained from any approved training course instructor or directly from the department.

(2) A nonrefundable administrative fee of thirty-five dollars will be assessed for each initial, replacement, or renewal asbestos supervisor certificate application. The fee (check or money order) must accompany the certificate application and be made payable to the department. An application form may be obtained from any approved training course instructor or directly from the department.

(3) A nonrefundable administrative fee of one thousand dollars will be assessed for each initial or renewal contractor

certificate application. The fee (check or money order) must accompany the certificate application and be made payable to the department. An application form may be obtained from the department.

Note: In circumstances where it is necessary to coordinate an expiration date with the date of expiration of a contractor registration issued under chapter 18.27 RCW, certificates may be valid for less than one year. In such circumstances, the certificate fee prescribed in WAC 296-65-025 will be prorated accordingly for the initial application only.

(4) A nonrefundable administrative fee of one thousand dollars will be assessed for each initial and renewal application for training course approval. A check or money order must accompany any application made under the provisions of WAC 296-65-015.

[Statutory Authority: RCW 49.17.040, 49.17.050, 49.26.040, and 49.26.130. 99-17-026, § 296-65-025, filed 8/10/99, effective 11/10/99. Statutory Authority: Chapter 49.17 RCW. 89-21-018 (Order 89-10), § 296-65-025, filed 10/10/89, effective 11/24/89; 87-24-051 (Order 87-24), § 296-65-025, filed 11/30/87. Statutory Authority: SSB 4209, 1985 c 387. 85-21-080 (Order 85-30), § 296-65-025, filed 10/22/85.]

WAC 296-65-030 Methods of compliance. (1) Before submitting a bid or working on an asbestos abatement project, any person or individual must obtain an asbestos contractor certificate as provided in WAC 296-65-017 and must have in its employ at least one certified asbestos supervisor responsible for supervising all asbestos projects undertaken by the contractor.

(2) A certified asbestos supervisor will not be required on asbestos projects involving less than three square feet or three linear feet of asbestos-containing material unless the surface area of the pipe is greater than three square feet. A certified asbestos supervisor is required for all Class I and II asbestos work in accordance with WAC 296-62-07728(4).

(3) No employee or other individual is eligible to do work or supervise an asbestos project without being issued a certificate by the department.

(a) Employees performing Class I or Class II asbestos work must be certified asbestos workers as specified in WAC 296-62-07722.

(b) Employees performing Class III or Class IV asbestos work specified by WAC 296-62-07722 as an asbestos project shall be certified asbestos workers.

(4) No person may assign any employee, contract with, or permit any individual, to work on an asbestos project as specified in WAC 296-62-07722 in any facility without the project being performed by a certified asbestos worker.

(5) A certified asbestos supervisor must provide direct, on-site supervision for an asbestos project. When an employer conducts an asbestos abatement project in its own facility by its own certified employees, supervision may be performed in the regular course of a certified asbestos supervisor's duties. Asbestos workers must have access to and be under the control of certified asbestos supervisors throughout the duration of the project.

(6) Any construction, renovation, remodeling, maintenance, repair, or demolition which was started without meeting the requirements of this section must be halted immediately and cannot be resumed before meeting such requirements.

[Statutory Authority: RCW 49.17.040, 49.17.050, 49.26.040 and 49.26.130. 99-17-026, § 296-65-030, filed 8/10/99, effective 11/10/99. Statutory Authority: RCW 49.17.040, [49.17.]050 and [49.17.]060. 97-19-014, § 296-65-030, filed 9/5/97, effective 11/5/97; 96-05-056, § 296-65-030, filed 2/16/96, effective 4/1/96. Statutory Authority: Chapter 49.17 RCW. 89-21-018 (Order 89-10), § 296-65-030, filed 10/10/89, effective 11/24/89. Statutory Authority: RCW 49.17.050(2) and 49.17.040. 87-10-008 (Order 87-06), § 296-65-030, filed 4/27/87. Statutory Authority: SSB 4209, 1985 c 387. 85-21-080 (Order 85-30), § 296-65-030, filed 10/22/85.]

WAC 296-65-035 Reciprocity. (1) The department may recognize certifications issued by another state for asbestos workers or supervisors provided that:

(a) The worker is in possession of a currently valid certification from the other state; and

(b) The department evaluates the other state's qualification procedures and determines the certification to be equivalent to the minimum requirements of this chapter.

(2) When the department's evaluation of another state's qualification procedures identifies that equivalent requirements are met, the department is authorized to issue a Washington state certification upon receipt of a completed application.

(3) When the department's evaluation of another state's qualification procedures identifies deficiencies, the department may require specific supplemental training and/or examination before issuing a Washington state certification.

[Statutory Authority: Chapter 49.17 RCW. 89-21-018 (Order 89-10), § 296-65-035, filed 10/10/89, effective 11/24/89.]

WAC 296-65-050 Denial, suspension, and revocation of certificates. (1) The department may deny, suspend, or revoke a certificate for failure of the holder to comply with any requirement of this chapter or any applicable health and safety standards and regulations.

(2) The criteria for decertification for asbestos workers, supervisors, and contractors shall include:

(a) Performing work requiring accreditation at a job site without being in physical possession of initial and current accreditation certificates;

(b) Permitting the duplication or use of one's own accreditation certificate by another;

(c) Performing work for which accreditation has not been received; or

(d) Obtaining accreditation from a training provider that does not have approval to offer training for the particular discipline from either EPA or from a state that has a contractor accreditation plan at least as stringent as the EPA MAP.

(3) The following persons are not certified for the purposes of this chapter and their respective certificate(s) shall be revoked by the department:

(a) Any person who obtains accreditation through fraudulent representation of training or examination documents;

(b) Any person who obtains training documentation through fraudulent means;

(c) Any person who gains admission to and completes refresher training through fraudulent representation of initial or previous refresher training documentation; or

(d) Any person who obtains accreditation through fraudulent representation of accreditation requirements such as education, training, professional registration, or experience.

(4) Before any certificate may be denied, suspended, or revoked, the holder thereof shall be given written notice of the department's intention to do so, mailed by registered mail, return receipt requested, to the holder's last known address. The notice shall enumerate the allegations against such holder and shall give him or her the opportunity to request a conference before the department. At such conference, the department and the holder shall have opportunity to produce witnesses and give testimony.

(5) A denial, suspension, or revocation order may be appealed to the board of industrial insurance appeals within fifteen working days after the denial, suspension, or revocation order is entered. The notice of appeal may be filed with the department or the board of industrial insurance appeals. The board of industrial insurance appeals shall hold the hearing in accordance with procedures established in RCW 49.17.140. Any party aggrieved by an order of the board of industrial insurance appeals may obtain superior court review in the manner provided in RCW 49.17.150.

(6) The department may suspend or revoke any certificate issued under this chapter for a period of not less than six months upon the following grounds:

(a) The certificate was obtained through error or fraud; or

(b) The holder thereof is judged to be incompetent to carry out the work for which the certificate was issued.

[Statutory Authority: RCW 49.17.040, [49.17.]050 and [49.17.]060. 96-05-056, § 296-65-050, filed 2/16/96, effective 4/1/96. Statutory Authority: Chapter 49.17 RCW. 89-21-018 (Order 89-10), § 296-65-050, filed 10/10/89, effective 11/24/89.]

Chapter 296-67 WAC

SAFETY STANDARDS FOR PROCESS SAFETY MANAGEMENT OF HIGHLY HAZARDOUS CHEMICALS

WAC	
296-67-001	Process safety management of highly hazardous chemicals.
296-67-005	Definitions.
296-67-009	Employee participation.
296-67-013	Process safety information.
296-67-017	Process hazard analysis.
296-67-021	Operating procedures.
296-67-025	Training.
296-67-029	Contractors.
296-67-033	Prestartup safety review.
296-67-037	Mechanical integrity.
296-67-041	Hot work permit.
296-67-045	Management of change.
296-67-049	Incident investigation.
296-67-053	Emergency planning and response.
296-67-057	Compliance audits.
296-67-061	Trade secrets.
296-67-285	Appendix A—List of highly hazardous chemicals, toxics and reactives (mandatory).
296-67-289	Appendix B—Block flow diagram and simplified process flow diagram (nonmandatory).
296-67-291	Appendix C—Compliance guidelines and recommendations for process safety management (nonmandatory).
296-67-293	Appendix D—Sources of further information (nonmandatory).

WAC 296-67-001 Process safety management of highly hazardous chemicals. (1) Purpose. This section contains requirements for preventing or minimizing the consequences of catastrophic releases of toxic, reactive, flammable, or explosive chemicals. These releases may result in toxic, fire, or explosion hazards.

(2) Application.

(a) This part applies to the following:

(i) A process which involves a chemical at or above the specified threshold quantities listed in WAC 296-67-285, Appendix A;

(ii) A process which involves a flammable liquid or gas (as defined in WAC 296-62-05405 [WAC 296-800-170]) on site in one location, in a quantity of 10,000 pounds (4535.9 kg) or more except for:

(A) Hydrocarbon fuels used solely for workplace consumption as a fuel (e.g., propane used for comfort heating, gasoline for vehicle refueling), if such fuels are not a part of a process containing another highly hazardous chemical covered by this standard;

(B) Flammable liquids stored in atmospheric tanks or transferred which are kept below their normal boiling point without benefit of chilling or refrigeration.

(b) This part does not apply to:

(i) Retail facilities;

(ii) Oil or gas well drilling or servicing operations; or

(iii) Normally unoccupied remote facilities.

[Statutory Authority: Chapter 49.17 RCW. 92-17-022 (Order 92-06), § 296-67-001, filed 8/10/92, effective 9/10/92.]

WAC 296-67-005 Definitions. "Atmospheric tank" means a storage tank which has been designed to operate at pressures from atmospheric through 0.5 p.s.i.g. (pounds per square inch gauge, 3.45 Kpa).

"Boiling point" means the boiling point of a liquid at a pressure of 14.7 pounds per square inch absolute (p.s.i.a.) (760 mm.). For the purposes of this part, where an accurate boiling point is unavailable for the material in question, or for mixtures which do not have a constant boiling point, the 10 percent point of a distillation performed in accordance with the Standard Method of Test for Distillation of Petroleum Products, ASTM D-86-62, may be used as the boiling point of the liquid.

"Catastrophic release" means a major uncontrolled emission, fire, or explosion, involving one or more highly hazardous chemicals, that presents serious danger to employees in the workplace.

"Facility" means the buildings, containers, or equipment which contain a process.

"Highly hazardous chemical" means a substance possessing toxic, reactive, flammable, or explosive properties and specified by WAC 296-67-001 (2)(a).

"Hot work" means work involving electric or gas welding, cutting, brazing, or similar flame or spark-producing operations.

"Normally unoccupied remote facility" means a facility which is operated, maintained, or serviced by employees who visit the facility only periodically to check its operation and to perform necessary operating or maintenance tasks. No employees are permanently stationed at the facility. Facilities meeting this definition are not contiguous with, and must be geographically remote from all other buildings, processes, or persons.

"Process" means any activity involving a highly hazardous chemical including any use, storage, manufacturing, han-

dling, or the on-site movement of such chemicals, or combination of these activities. For purposes of this definition, any group of vessels which are interconnected and separate vessels which are located such that a highly hazardous chemical could be involved in a potential release shall be considered a single process.

"Replacement in kind" means a replacement which satisfies the design specification.

"Trade secret" means any confidential formula, pattern, process, device, information, or compilation of information that is used in an employer's business, and that gives the employer an opportunity to obtain an advantage over competitors who do not know or use it. Chapter 296-62 WAC, Part B-1, sets out the criteria to be used in evaluating trade secrets.

[Statutory Authority: RCW 49.17.010, [49.17].040, and [49.17].050. 01-11-038, § 296-67-005, filed 5/9/01, effective 9/1/01. Statutory Authority: Chapter 49.17 RCW. 93-21-075 (Order 93-06), § 296-67-005, filed 10/20/93, effective 12/1/93; 92-17-022 (Order 92-06), § 296-67-005, filed 8/10/92, effective 9/10/92.]

WAC 296-67-009 Employee participation. (1) Employers shall develop a written plan of action regarding the implementation of the employee participation required by this section.

(2) Employers shall consult with employees and their representatives on the conduct and development of process hazards analyses and on the development of the other elements of process safety management in this standard.

(3) Employers shall provide to employees and their representatives access to process hazard analyses and to all other information required to be developed under this standard.

[Statutory Authority: Chapter 49.17 RCW. 92-17-022 (Order 92-06), § 296-67-009, filed 8/10/92, effective 9/10/92.]

WAC 296-67-013 Process safety information. In accordance with the schedule set forth in WAC 296-67-017, the employer shall complete a compilation of written process safety information before conducting any process hazard analysis required by the standard. The compilation of written process safety information is to enable the employer and the employees involved in operating the process to identify and understand the hazards posed by those processes involving highly hazardous chemicals. This process safety information shall include information pertaining to the hazards of the highly hazardous chemicals used or produced by the process, information pertaining to the technology of the process, and information pertaining to the equipment in the process.

(1) Information pertaining to the hazards of the highly hazardous chemicals in the process. This information shall consist of at least the following:

(a) Toxicity information;

(b) Permissible exposure limits;

(c) Physical data;

(d) Reactivity data;

(e) Corrosivity data;

(f) Thermal and chemical stability data; and

(g) Hazardous effects of inadvertent mixing of different materials that could foreseeably occur.

Note: Material Safety Data Sheets meeting the requirements of WAC 296-62-05413 may be used to comply with this requirement to the extent they contain the information required by this section.

(2) Information pertaining to the technology of the process.

(a) Information concerning the technology of the process shall include at least the following:

(i) A block flow diagram or simplified process flow diagram (see WAC 296-67-289, Appendix B);

(ii) Process chemistry;

(iii) Maximum intended inventory;

(iv) Safe upper and lower limits for such items as temperatures, pressures, flows, or compositions; and

(v) An evaluation of the consequences of deviations, including those affecting the safety and health of employees.

(b) Where the original technical information no longer exists, such information may be developed in conjunction with the process hazard analysis in sufficient detail to support the analysis.

(3) Information pertaining to the equipment in the process.

(a) Information pertaining to the equipment in the process shall include:

(i) Materials of construction;

(ii) Piping and instrument diagrams (P&IDs);

(iii) Electrical classification;

(iv) Relief system design and design basis;

(v) Ventilation system design;

(vi) Design codes and standards employed;

(vii) Material and energy balances for processes built after May 26, 1992; and

(viii) Safety systems (e.g., interlocks, detection, or suppression systems).

(b) The employer shall document that equipment complies with recognized and generally accepted good engineering practices.

(c) For existing equipment designed and constructed in accordance with codes, standards, or practices that are no longer in general use, the employer shall determine and document that the equipment is designed, maintained, inspected, tested, and operating in a safe manner.

[Statutory Authority: Chapter 49.17 RCW. 92-17-022 (Order 92-06), § 296-67-013, filed 8/10/92, effective 9/10/92.]

WAC 296-67-017 Process hazard analysis. (1) The employer shall perform an initial process hazard analysis (hazard evaluation) on processes covered by this standard. The process hazard analysis shall be appropriate to the complexity of the process and shall identify, evaluate, and control the hazards involved in the process. Employers shall determine and document the priority order for conducting process hazard analyses based on a rationale which includes such considerations as extent of the process hazards, number of potentially affected employees, age of the process, and operating history of the process. The process hazard analysis shall be conducted as soon as possible, but not later than the following schedule:

(a) No less than 25 percent of the initial process hazards analyses shall be completed by May 26, 1994;

(b) No less than 50 percent of the initial process hazards analyses shall be completed by May 26, 1995;

(c) No less than 75 percent of the initial process hazards analyses shall be completed by May 26, 1996;

(d) All initial process hazards analyses shall be completed by May 26, 1997;

(e) Process hazards analyses completed after May 26, 1987, which meet the requirements of this section are acceptable as initial process hazards analyses. These process hazard analyses shall be updated and revalidated, based on their completion date, in accordance with this section.

(2) The employer shall use one or more of the following methodologies that are appropriate to determine and evaluate the hazards of the process being analyzed.

(a) What-If;

(b) Checklist;

(c) What-If/Checklist;

(d) Hazard and Operability Study (HAZOP);

(e) Failure Mode and Effects Analysis (FMEA);

(f) Fault Tree Analysis; or

(g) An appropriate equivalent methodology.

(3) The process hazard analysis shall address:

(a) The hazards of the process;

(b) The identification of any previous incident which had a likely potential for catastrophic consequences in the workplace;

(c) Engineering and administrative controls applicable to the hazards and their interrelationships such as appropriate application of detection methodologies to provide early warning of releases. (Acceptable detection methods might include process monitoring and control instrumentation with alarms, and detection hardware such as hydrocarbon sensors);

(d) Consequences of failure of engineering and administrative controls;

(e) Facility siting;

(f) Human factors; and

(g) A qualitative evaluation of a range of the possible safety and health effects of failure of controls on employees in the workplace.

(4) The process hazard analysis shall be performed by a team with expertise in engineering and process operations, and the team shall include at least one employee who has experience and knowledge specific to the process being evaluated. Also, one member of the team must be knowledgeable in the specific process hazard analysis methodology being used.

(5) The employer shall establish a system to promptly address the team's findings and recommendations; assure that the recommendations are resolved in a timely manner and that the resolution is documented; document what actions are to be taken; complete actions as soon as possible; develop a written schedule of when these actions are to be completed; communicate the actions to operating, maintenance, and other employees whose work assignments are in the process and who may be affected by the recommendations or actions.

(6) At least every five years after the completion of the initial process hazard analysis, the process hazard analysis shall be updated and revalidated by a team meeting the requirements of this section, to assure that the process hazard analysis is consistent with the current process.

(7) Employers shall retain process hazards analyses and updates or revalidations for each process covered by this part, as well as the documented resolution of recommendations described in this section for the life of the process.

[Statutory Authority: Chapter 49.17 RCW. 92-17-022 (Order 92-06), § 296-67-017, filed 8/10/92, effective 9/10/92.]

WAC 296-67-021 Operating procedures. (1) The employer shall develop and implement written operating procedures that provide clear instructions for safely conducting activities involved in each covered process consistent with the process safety information and shall address at least the following elements.

(a) Steps for each operating phase:

(i) Initial startup;

(ii) Normal operations;

(iii) Temporary operations;

(iv) Emergency shutdown including the conditions under which emergency shutdown is required, and the assignment of shutdown responsibility to qualified operators to ensure that emergency shutdown is executed in a safe and timely manner;

(v) Emergency operations;

(vi) Normal shutdown; and

(vii) Startup following a turnaround, or after an emergency shutdown.

(b) Operating limits:

(i) Consequences of deviation; and

(ii) Steps required to correct or avoid deviation.

(c) Safety and health considerations:

(i) Properties of, and hazards presented by, the chemicals used in the process;

(ii) Precautions necessary to prevent exposure, including engineering controls, administrative controls, and personal protective equipment;

(iii) Control measures to be taken if physical contact or airborne exposure occurs;

(iv) Quality control for raw materials and control of hazardous chemical inventory levels; and

(v) Any special or unique hazards.

(d) Safety systems and their functions.

(2) Operating procedures shall be readily accessible to employees who work in or maintain a process.

(3) The operating procedures shall be reviewed as often as necessary to assure that they reflect current operating practice, including changes that result from changes in process chemicals, technology, and equipment, and changes to facilities.

(4) The employer shall certify annually that these operating procedures are current and accurate.

(5) The employer shall develop and implement safe work practices to provide for the control of hazards during operations such as lockout/tagout; confined space entry; opening process equipment or piping; and control over entrance into a facility by maintenance, contractor, laboratory, or other support personnel. These safe work practices shall apply to employees and contractor employees.

[Statutory Authority: Chapter 49.17 RCW. 92-17-022 (Order 92-06), § 296-67-021, filed 8/10/92, effective 9/10/92.]

WAC 296-67-025 Training. (1) Initial training.

(a) Each employee presently involved in operating a process, and each employee before being involved in operating a newly assigned process, shall be trained in an overview of the process and in the operating procedures as specified in WAC

296-67-021. The training shall include emphasis on the specific safety and health hazards, emergency operations including shutdown, and safe work practices applicable to the employee's job tasks.

(b) In lieu of initial training for those employees already involved in operating a process on May 26, 1992, an employer may certify in writing that the employee has the required knowledge, skills, and abilities to safely carry out the duties and responsibilities as specified in the operating procedures.

(2) Refresher training. Refresher training shall be provided at least every three years, and more often if necessary, to each employee involved in operating a process to assure that the employee understands and adheres to the current operating procedures of the process. The employer, in consultation with the employees involved in operating the process, shall determine the appropriate frequency of refresher training.

(3) Training documentation. The employer shall ascertain that each employee involved in operating a process has received and understood the training required by this section. The employer shall prepare a record which contains the identity of the employee, the date of training, and the means used to verify that the employee understood the training.

[Statutory Authority: Chapter 49.17 RCW. 92-17-022 (Order 92-06), § 296-67-025, filed 8/10/92, effective 9/10/92.]

WAC 296-67-029 Contractors. (1) Application. This section applies to contractors performing maintenance or repair, turnaround, major renovation, or specialty work on or adjacent to a covered process. It does not apply to contractors providing incidental services which do not influence process safety, such as janitorial work, food and drink services, laundry, delivery, or other supply services.

(2) Employer responsibilities.

(a) The employer, when selecting a contractor, shall obtain and evaluate information regarding the contract employer's safety performance and programs.

(b) The employer shall inform contract employers of the known potential fire, explosion, or toxic release hazards related to the contractor's work and the process.

(c) The employer shall explain to contract employers the applicable provisions of the emergency action plan required by WAC 296-67-053.

(d) The employer shall develop and implement safe work practices consistent with WAC 296-67-021, to control the entrance, presence, and exit of contract employers and contract employees in covered process areas.

(e) The employer shall periodically evaluate the performance of contract employers in fulfilling their obligations as specified in subsection (3) of this section.

(f) The employer shall maintain a contract employee injury and illness log related to the contractor's work in process areas.

(3) Contract employer responsibilities.

(a) The contract employer shall assure that each contract employee is trained in the work practices necessary to safely perform his/her job.

(b) The contract employer shall assure that each contract employee is instructed in the known potential fire, explosion, or toxic release hazards related to his/her job and the process, and the applicable provisions of the emergency action plan.

(c) The contract employer shall document that each contract employee has received and understood the training required by this paragraph. The contract employer shall prepare a record which contains the identity of the contract employee, the date of training, and the means used to verify that the employee understood the training.

(d) The contract employer shall assure that each contract employee follows the safety rules of the facility including the safe work practices required by WAC 296-67-021.

(e) The contract employer shall advise the employer of any unique hazards presented by the contract employer's work, or of any hazards found by the contract employer's work.

[Statutory Authority: Chapter 49.17 RCW. 92-17-022 (Order 92-06), § 296-67-029, filed 8/10/92, effective 9/10/92.]

WAC 296-67-033 Prestartup safety review. (1) The employer shall perform a prestartup safety review for new facilities and for modified facilities when the modification is significant enough to require a change in the process safety information.

(2) The prestartup safety review shall confirm that prior to the introduction of highly hazardous chemicals to a process:

(a) Construction and equipment is in accordance with design specifications;

(b) Safety, operating, maintenance, and emergency procedures are in place and are adequate;

(c) For new facilities, a process hazard analysis has been performed and recommendations have been resolved or implemented before startup; and modified facilities meet the requirements contained in management of change, WAC 296-67-045.

(d) Training of each employee involved in operating a process has been completed.

[Statutory Authority: Chapter 49.17 RCW. 92-17-022 (Order 92-06), § 296-67-033, filed 8/10/92, effective 9/10/92.]

WAC 296-67-037 Mechanical integrity. (1) Application. WAC 296-67-037 (2) through (6) apply to the following process equipment:

(a) Pressure vessels and storage tanks;

(b) Piping systems (including piping components such as valves);

(c) Relief and vent systems and devices;

(d) Emergency shutdown systems;

(e) Controls (including monitoring devices and sensors, alarms, and interlocks); and

(f) Pumps.

(2) Written procedures. The employer shall establish and implement written procedures to maintain the ongoing integrity of process equipment.

(3) Training for process maintenance activities. The employer shall train each employee involved in maintaining the ongoing integrity of process equipment in an overview of that process and its hazards and in the procedures applicable to the employee's job tasks to assure that the employee can perform the job tasks in a safe manner.

(4) Inspection and testing.

(a) Inspections and tests shall be performed on process equipment.

(b) Inspection and testing procedures shall follow recognized and generally accepted good engineering practices.

(c) The frequency of inspections and tests of process equipment shall be consistent with applicable manufacturers' recommendations and good engineering practices, and more frequently if determined to be necessary by prior operating experience.

(d) The employer shall document each inspection and test that has been performed on process equipment. The documentation shall identify the date of the inspection or test, the name of the person who performed the inspection or test, the serial number or other identifier of the equipment on which the inspection or test was performed, a description of the inspection or test performed, and the results of the inspection or test.

(5) Equipment deficiencies. The employer shall correct deficiencies in equipment that are outside acceptable limits (defined by the process safety information in WAC 296-67-013) before further use or in a safe and timely manner when necessary means are taken to assure safe operation.

(6) Quality assurance.

(a) In the construction of new plants and equipment, the employer shall assure that equipment as it is fabricated is suitable for the process application for which they will be used.

(b) Appropriate checks and inspections shall be performed to assure that equipment is installed properly and consistent with design specifications and the manufacturer's instructions.

(c) The employer shall assure that maintenance materials, spare parts and equipment are suitable for the process application for which they will be used.

[Statutory Authority: Chapter 49.17 RCW. 92-17-022 (Order 92-06), § 296-67-037, filed 8/10/92, effective 9/10/92.]

WAC 296-67-041 Hot work permit. (1) The employer shall issue a hot work permit for hot work operations conducted on or near a covered process.

(2) The permit shall document that the fire prevention and protection requirements in WAC 296-24-695 have been implemented prior to beginning the hot work operations; it shall indicate the date(s) authorized for hot work; and identify the object on which hot work is to be performed.

(3) The permit shall be kept on file until completion of the hot work operations.

[Statutory Authority: Chapter 49.17 RCW. 92-17-022 (Order 92-06), § 296-67-041, filed 8/10/92, effective 9/10/92.]

WAC 296-67-045 Management of change. (1) The employer shall establish and implement written procedures to manage changes (except for "replacements in kind") to process chemicals, technology, equipment, and procedures; and, changes to facilities that affect a covered process.

(2) The procedures shall assure that the following considerations are addressed prior to any change:

(a) The technical basis for the proposed change;

(b) Impact of change on safety and health;

(c) Modifications to operating procedures;

(d) Necessary time period for the change; and

(e) Authorization requirements for the proposed change.

(3) Employees involved in operating a process and maintenance and contract employees whose job tasks will be affected by a change in the process shall be informed of, and trained in, the change prior to start up of the process or affected part of the process.

(4) If a change covered by this section results in a change in the process safety information required by WAC 296-67-013, such information shall be updated accordingly.

(5) If a change covered by this section results in a change in the operating procedures or practices required by WAC 296-67-021, such procedures or practices shall be updated accordingly.

[Statutory Authority: Chapter 49.17 RCW. 92-17-022 (Order 92-06), § 296-67-045, filed 8/10/92, effective 9/10/92.]

WAC 296-67-049 Incident investigation. (1) The employer shall investigate each incident which resulted in, or could reasonably have resulted in a catastrophic release of highly hazardous chemical in the workplace.

(2) An incident investigation shall be initiated as promptly as possible, but not later than 48 hours following the incident.

(3) An incident investigation team shall be established and consist of at least one person knowledgeable in the process involved, including a contract employee if the incident involved work of the contractor, and other persons with appropriate knowledge and experience to thoroughly investigate and analyze the incident.

(4) A report shall be prepared at the conclusion of the investigation which includes at a minimum:

(a) Date of incident;

(b) Date investigation began;

(c) A description of the incident;

(d) The factors that contributed to the incident; and

(e) Any recommendations resulting from the investigation.

(5) The employer shall establish a system to promptly address and resolve the incident report findings and recommendations. Resolutions and corrective actions shall be documented.

(6) The report shall be reviewed with all affected personnel whose job tasks are relevant to the incident findings including contract employees where applicable.

(7) Incident investigation reports shall be retained for five years.

[Statutory Authority: Chapter 49.17 RCW. 92-17-022 (Order 92-06), § 296-67-049, filed 8/10/92, effective 9/10/92.]

WAC 296-67-053 Emergency planning and response. The employer shall establish and implement an emergency action plan for the entire plant in accordance with the provisions of WAC 296-24-567. In addition, the emergency action plan shall include procedures for handling small releases. Employers covered under this standard may also be subject to the emergency response provisions contained in chapter 296-824 WAC, Emergency response to hazardous substance releases.

[Statutory Authority: RCW 49.17.010, [49.17].040, [49.17].050, and [49.17].060. 02-20-034, § 296-67-053, filed 9/24/02, effective 10/1/02. Statutory Authority: RCW 49.17.010, [49.17].040, and [49.17].050. 01-11-038,

§ 296-67-053, filed 5/9/01, effective 9/1/01. Statutory Authority: Chapter 49.17 RCW. 92-17-022 (Order 92-06), § 296-67-053, filed 8/10/92, effective 9/10/92.]

WAC 296-67-057 Compliance audits. (1) Employers shall certify that they have evaluated compliance with the provisions of this section at least every three years to verify that the procedures and practices developed under the standard are adequate and are being followed.

(2) The compliance audit shall be conducted by at least one person knowledgeable in the process.

(3) A report of the findings of the audit shall be developed.

(4) The employer shall promptly determine and document an appropriate response to each of the findings of the compliance audit, and document that deficiencies have been corrected.

(5) Employers shall retain the two most recent compliance audit reports.

[Statutory Authority: Chapter 49.17 RCW. 92-17-022 (Order 92-06), § 296-67-057, filed 8/10/92, effective 9/10/92.]

WAC 296-67-061 Trade secrets. (1) Employers shall make all information necessary to comply with the section available to those persons responsible for compiling the process safety information (required by WAC 296-67-013), those assisting in the development of the process hazard analysis (required by WAC 296-67-017), those responsible for developing the operating procedures (required by WAC 296-67-021), and those involved in incident investigations (required by WAC 296-67-049), emergency planning and response (WAC 296-67-053) and compliance audits (WAC 296-67-057) without regard to possible trade secret status of such information.

(2) Nothing in this section shall preclude the employer from requiring the persons to whom the information is made available under WAC 296-67-061 to enter into confidentiality agreements not to disclose the information as set forth in WAC 296-62-053.

(3) Subject to the rules and procedures set forth in WAC 296-62-053, employees and their designated representatives shall have access to trade secret information contained within the process hazard analysis and other documents required to be developed by this standard.

[Statutory Authority: RCW 49.17.010, [49.17].040, and [49.17].050. 01-11-038, § 296-67-061, filed 5/9/01, effective 9/1/01. Statutory Authority: Chapter 49.17 RCW. 92-17-022 (Order 92-06), § 296-67-061, filed 8/10/92, effective 9/10/92.]

WAC 296-67-285 Appendix A—List of highly hazardous chemicals, toxics and reactives (mandatory). This appendix contains a listing of toxic and reactive highly hazardous chemicals which present a potential for a catastrophic event at or above the threshold quantity.

CHEMICAL NAME	CAS*	TQ**
Acetaldehyde	75-07-0	2500
Acrolein (2-Propenal)	107-02-8	150
Acrylyl Chloride	814-68-6	250
Allyl Chloride	107-05-1	1000
Allylamine	107-11-9	1000
Alkylaluminums	Varies	5000
Ammonia, Anhydrous	7664-41-7	10000
Ammonia solutions (>44% ammonia by weight)	7664-41-7	15000
Ammonium Perchlorate	7790-98-9	7500
Ammonium Permanganate	7787-36-2	7500
Arsine (also called Arsenic Hydride)	7784-42-1	100
Bis(Chloromethyl) Ether	542-88-1	100
Boron Trichloride	10294-34-5	2500
Boron Trifluoride	7637-07-2	250
Bromine	7726-95-6	1500
Bromine Chloride	13863-41-7	1500
Bromine Pentafluoride	7789-30-2	2500
Bromine Trifluoride	7787-71-5	15000
3-Bromopropyne (also called Propargyl Bromide)	106-96-7	100
Butyl Hydroperoxide (Tertiary)	75-91-2	5000
Butyl Perbenzoate (Tertiary)	614-45-9	7500
Carbonyl Chloride (see Phosgene)	75-44-5	100
Carbonyl Fluoride	353-50-4	2500
Cellulose Nitrate (concentration >12.6% nitrogen)	9004-70-0	2500
Chlorine	7782-50-5	1500
Chlorine Dioxide	10049-04-4	1000
Chlorine Pentafluoride	13637-63-3	1000
Chlorine Trifluoride	7790-91-2	1000
Chlorodiethylaluminum (also called Diethylaluminum Chloride)	96-10-6	5000
1-Chloro-2,4-Dinitrobenzene	97-00-7	5000
Chloromethyl Methyl Ether	107-30-2	500
Chloropicrin	76-06-2	500
Chloropicrin and Methyl Bromide mixture	None	1500
Chloropicrin and Methyl Chloride mixture	None	1500
Cumene Hydroperoxide	80-15-9	5000
Cyanogen	460-19-5	2500
Cyanogen Chloride	506-77-4	500
Cyanuric Fluoride	675-14-9	100
Diacetyl Peroxide (Concentration >70%)	110-22-5	5000
Diazomethane	334-88-3	500
Dibenzoyl Peroxide	94-36-0	7500
Diborane	19287-45-7	100
Dibutyl Peroxide (Tertiary)	110-05-4	5000
Dichloro Acetylene	7572-29-4	250
Dichlorosilane	4109-96-0	2500
Diethylzinc	557-20-0	10000
Diisopropyl Peroxydicarbonate	105-64-6	7500
Dilaluroyl Peroxide	105-74-8	7500
Dimethyldichlorosilane	75-78-5	1000
Dimethylhydrazine, 1,1-	57-14-7	1000
Dimethylamine, Anhydrous	124-40-3	2500
2,4-Dinitroaniline	97-02-9	5000
Ethyl Methyl Ketone Peroxide (also Methyl Ethyl Ketone Peroxide; concentration >60%)	1338-23-4	5000
Ethyl Nitrite	109-95-5	5000
Ethylamine	75-04-7	7500
Ethylene Fluorohydrin	371-62-0	100
Ethylene Oxide	75-21-8	5000
Ethyleneimine	151-56-4	1000
Fluorine	7782-41-4	1000
Formaldehyde (Formalin)	50-00-0	1000
Furan	110-00-9	500
Hexafluoroacetone	684-16-2	5000
Hydrochloric Acid, Anhydrous	7647-01-0	5000
Hydrofluoric Acid, Anhydrous	7664-39-3	1000
Hydrogen Bromide	10035-10-6	5000
Hydrogen Chloride	7647-01-0	5000
Hydrogen Cyanide, Anhydrous	74-90-8	1000
Hydrogen Fluoride	7664-39-3	1000
Hydrogen Peroxide (52% by weight or greater)	7722-84-1	7500
Hydrogen Selenide	7783-07-5	150
Hydrogen Sulfide	7783-06-4	1500
Hydroxylamine	7803-49-8	2500
Iron, Pentacarbonyl	13463-40-6	250
Isopropylamine	75-31-0	5000
Ketene	463-51-4	100

CHEMICAL NAME	CAS*	TQ**
Methacrylaldehyde	78-85-3	1000
Methacryloyl Chloride	920-46-7	150
Methacryloyloxyethyl Isocyanate	30674-80-7	100
Methyl Acrylonitrile	126-98-7	250
Methylamine, Anhydrous	74-89-5	1000
Methyl Bromide	74-83-9	2500
Methyl Chloride	74-87-3	15000
Methyl Chloroformate	79-22-1	500
Methyl Ethyl Ketone Peroxide (concentration >60%)	1338-23-4	5000
Methyl Fluoroacetate	453-18-9	100
Methyl Fluorosulfate	421-20-5	100
Methyl Hydrazine	60-34-4	100
Methyl Iodide	74-88-4	7500
Methyl Isocyanate	624-83-9	250
Methyl Mercaptan	74-93-1	5000
Methyl Vinyl Ketone	79-84-4	100
Methyltrichlorosilane	75-79-6	500
Nickel Carbonyl (Nickel Tetracarbonyl)	13463-39-3	150
Nitric Acid (94.5% by weight or greater)	7697-37-2	500
Nitric Oxide	10102-43-9	250
Nitroaniline (para Nitroaniline)	100-01-6	5000
Nitromethane	75-52-5	2500
Nitrogen Dioxide	10102-44-0	250
Nitrogen Oxides (NO; NO2; N204; N203)	10102-44-0	250
Nitrogen Tetroxide (also called Nitrogen Peroxide)	10544-72-6	250
Nitrogen Trifluoride	7783-54-2	5000
Nitrogen Trioxide	10544-73-7	250
Oleum (65% to 80% by weight; also called Fuming Sulfuric Acid)	8014-94-7	1000
Osmium Tetroxide	20816-12-0	100
Oxygen Difluoride (Fluorine Monoxide)	7783-41-7	100
Ozone	10028-15-6	100
Pentaborane	19624-22-7	100
Peracetic Acid (concentration >60% Acetic Acid; also called Peroxyacetic Acid)	79-21-0	1000
Perchloric Acid (concentration >60% by weight)	7601-90-3	5000
Perchloromethyl Mercaptan	594-42-3	150
Perchloryl Fluoride	7616-94-6	5000
Peroxyacetic Acid (concentration >60% Acetic Acid; also called Peracetic Acid)	79-21-0	1000
Phosgene (also called Carbonyl Chloride)	75-44-5	100
Phosphine (Hydrogen Phosphide)	7803-51-2	100
Phosphorus Oxychloride (also called Phosphoryl Chloride)	10025-87-3	1000
Phosphorus Trichloride	7719-12-2	1000
Phosphoryl Chloride (also called Phosphorus Oxychloride)	10025-87-3	1000
Propargyl Bromide	106-96-7	100
Propyl Nitrate	627-3-4	2500
Sarin	107-44-8	100
Selenium Hexafluoride	7783-79-1	1000
Stibine (Antimony Hydride)	7803-52-3	500
Sulfur Dioxide (liquid)	7446-09-5	1000
Sulfur Pentafluoride	5714-22-7	250
Sulfur Tetrafluoride	7783-60-0	250
Sulfur Trioxide (also called Sulfuric Anhydride)	7446-11-9	1000
Sulfuric Anhydride (also called Sulfur Trioxide)	7446-11-9	1000
Tellurium Hexafluoride	7783-80-4	250
Tetrafluoroethylene	116-14-3	5000
Tetrafluorohydrazine	10036-47-2	5000
Tetramethyl Lead	75-74-1	1000
Thionyl Chloride	7719-09-7	250
Trichloro (chloromethyl) Silane	1558-25-4	100
Trichloro (dichlorophenyl) Silane	27137-85-5	2500
Trichlorosilane	10025-78-2	5000
Trifluorochloroethylene	79-38-9	10000
Trimethyoxysilane	2487-90-3	1500

* Chemical Abstract Service Number.

** Threshold Quantity in Pounds (Amount necessary to be covered by this standard).

[Statutory Authority: Chapter 49.17 RCW. 93-21-075 (Order 93-06), § 296-67-285, filed 10/20/93, effective 12/1/93; 92-17-022 (Order 92-06), § 296-67-285, filed 8/10/92, effective 9/10/92.]

WAC 296-67-289 Appendix B—Block flow diagram and simplified process flow diagram (nonmandatory).

EXAMPLE OF A BLOCK FLOW DIAGRAM

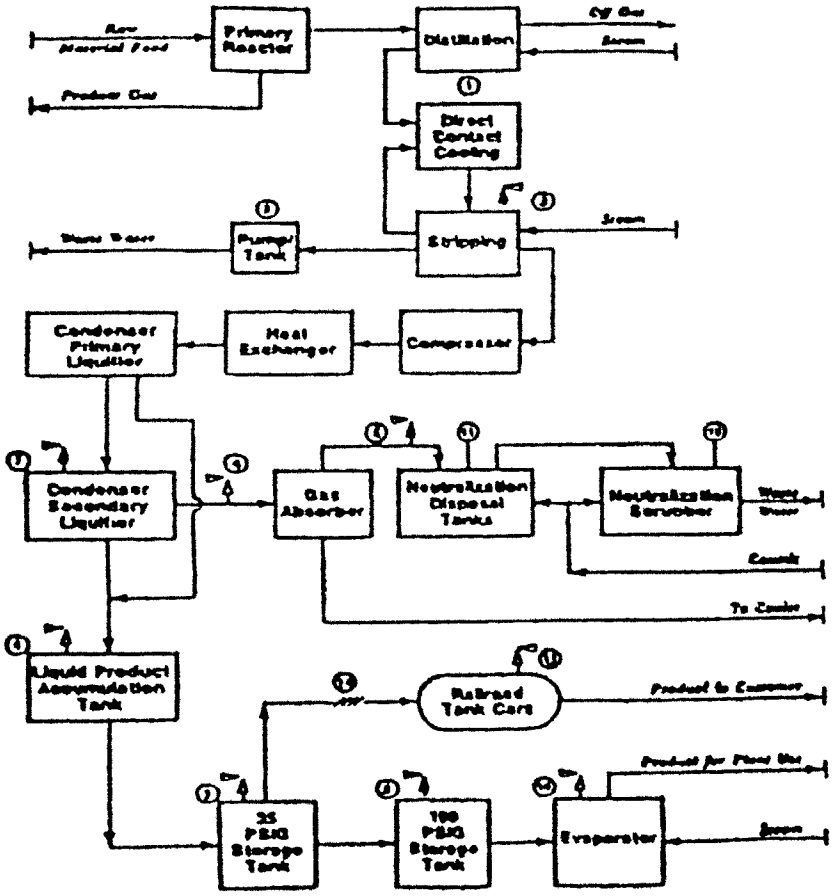

EXAMPLE OF A PROCESS FLOW DIAGRAM

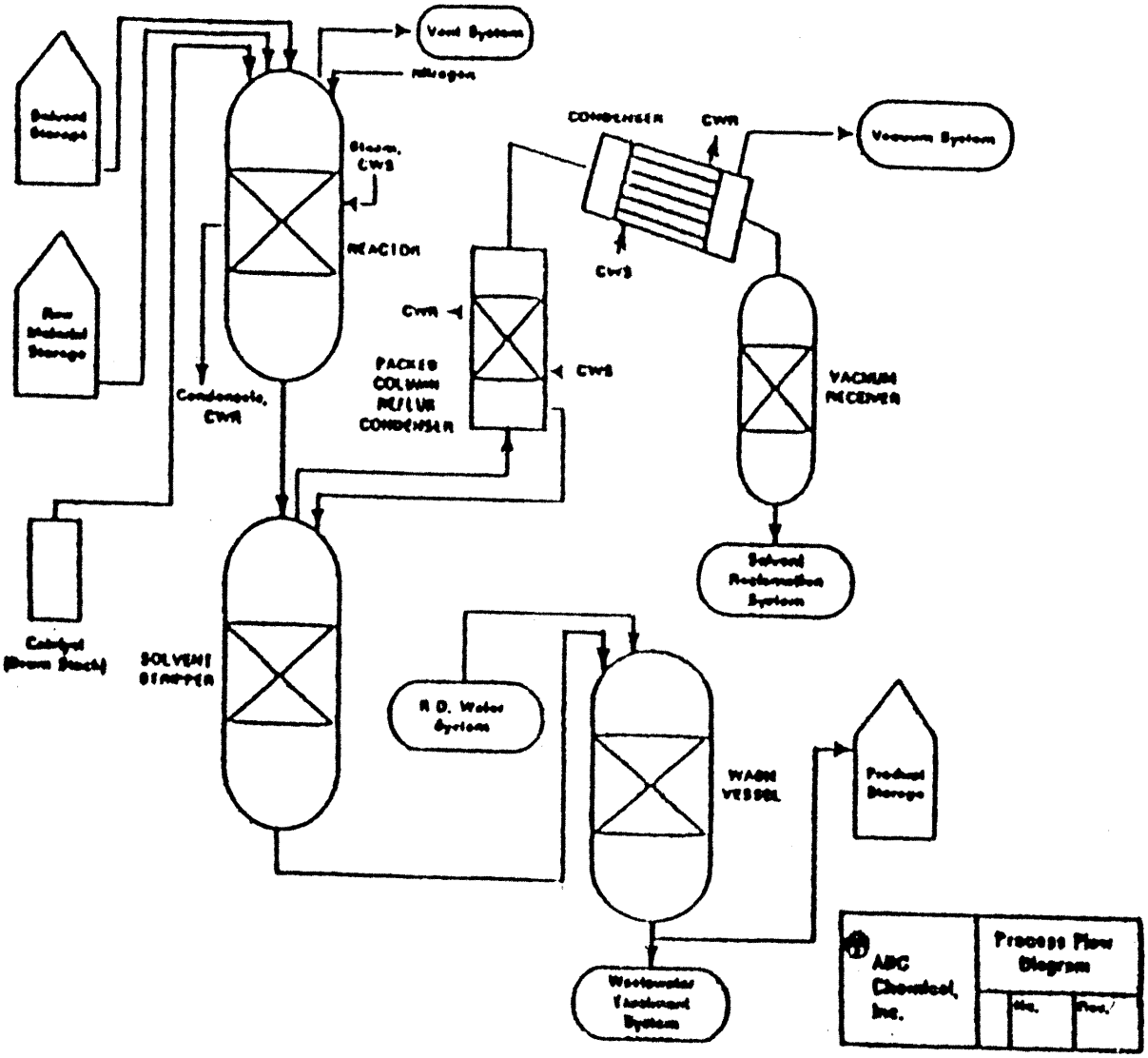

[Statutory Authority: Chapter 49.17 RCW. 92-17-022 (Order 92-06), § 296-67-289, filed 8/10/92, effective 9/10/92.]

WAC 296-67-291 Appendix C—Compliance guidelines and recommendations for process safety management (nonmandatory). This appendix serves as a nonmandatory guideline to assist employers and employees in complying with the requirements of this section, as well as provides other helpful recommendations and information. Examples presented in this appendix are not the only means of achieving the performance goals in the standard. This appendix neither adds nor detracts from the requirements of the standard.

(1) Introduction to process safety management. The major objective of process safety management of highly hazardous chemicals is to prevent unwanted releases of hazardous chemicals especially into locations which could expose employees and others to serious hazards. An effective process safety management program requires a systematic approach to evaluating the whole process. Using this approach the process design, process technology, operational and maintenance activities and procedures, nonroutine activities and procedures, emergency preparedness plans and procedures, training programs, and other elements which impact the process are all considered in the evaluation. The various lines of defense that have been incorporated into the design and operation of the process to prevent or mitigate the release of hazardous chemicals need to be evaluated and strengthened to assure their effectiveness at each level. Process safety management is the proactive identification, evaluation and mitigation or prevention of chemical releases that could occur as a result of failures in process, procedures, or equipment. The process safety management standard targets highly hazardous chemicals that have the potential to cause a catastrophic incident. This standard as a whole is to aid employ-

ers in their efforts to prevent or mitigate episodic chemical releases that could lead to a catastrophe in the workplace and possibly to the surrounding community. To control these types of hazards, employers need to develop the necessary expertise, experiences, judgment, and proactive initiative within their workforce to properly implement and maintain an effective process safety management program as envisioned in the WISHA standard. This WISHA standard is required by the Clean Air Act amendments as is the Environmental Protection Agency's Risk Management Plan. Employers, who merge the two sets of requirements into their process safety management program, will better assure full compliance with each as well as enhancing their relationship with the local community. While WISHA believes process safety management will have a positive effect on the safety of employees in workplaces and also offers other potential benefits to employers (increased productivity), smaller businesses which may have limited resources available to them at this time, might consider alternative avenues of decreasing the risks associated with highly hazardous chemicals at their workplaces. One method which might be considered is the reduction in the inventory of the highly hazardous chemical. This reduction in inventory will result in a reduction of the risk or potential for a catastrophic incident. Also, employers including small employers may be able to establish more efficient inventory control by reducing the quantities of highly hazardous chemicals on site below the established threshold quantities. This reduction can be accomplished by ordering smaller shipments and maintaining the minimum inventory necessary for efficient and safe operation. When reduced inventory is not feasible, then the employer might consider dispersing inventory to several locations on site. Dispersing storage into locations where a release in one location will not cause a release in another location is a practical method to also reduce the risk or potential for catastrophic incidents.

(2) Employee involvement in process safety management. Section 304 of the Clean Air Act amendments states that employers are to consult with their employees and their representatives regarding the employers efforts in the development and implementation of the process safety management program elements and hazard assessments. Section 304 also requires employers to train and educate their employees and to inform affected employees of the findings from incident investigations required by the process safety management program. Many employers, under their safety and health programs, have already established means and methods to keep employees and their representatives informed about relevant safety and health issues and employers may be able to adapt these practices and procedures to meet their obligations under this standard. Employers who have not implemented an occupational safety and health program may wish to form a safety and health committee of employees and management representatives to help the employer meet the obligations specified by this standard. These committees can become a significant ally in helping the employer to implement and maintain an effective process safety management program for all employees.

(3) Process safety information. Complete and accurate written information concerning process chemicals, process technology, and process equipment is essential to an effective process safety management program and to a process hazards analysis. The compiled information will be a necessary resource to a variety of users including the team that will perform the process hazards analysis as required under WAC 296-67-017; those developing the training programs and the operating procedures; contractors whose employees will be working with the process; those conducting the prestartup reviews; local emergency preparedness planners; and incurrence and enforcement officials. The information to be compiled about the chemicals, including process intermediates, needs to be comprehensive enough for an accurate assessment of the fire and explosion characteristics, reactivity hazards, the safety and health hazards to workers, and the corrosion and erosion effects on the process equipment and monitoring tools. Current material safety data sheet (MSDS) information can be used to help meet this requirement which must be supplemented with process chemistry information including runaway reaction and over pressure hazards if applicable. Process technology information will be a part of the process safety information package and it is expected that it will include diagrams of the type shown in WAC 296-67-289, Appendix B of this part as well as employer established criteria for maximum inventory levels for process chemicals; limits beyond which would be considered upset conditions; and a qualitative estimate of the consequences or results of deviation that could occur if operating beyond the established process limits. Employers are encouraged to use diagrams which will help users understand the process. A block flow diagram is used to show the major process equipment and interconnecting process flow lines and show flow rates, stream composition, temperatures, and pressures when necessary for clarity. The block flow diagram is a simplified diagram. Process flow diagrams are more complex and will show all main flow streams including valves to enhance the understanding of the process, as well as pressures and temperatures on all feed and product lines within all major vessels, in and out of headers and heat exchangers, and points of pressure and temperature control. Also, materials of construction information, pump capacities and pressure heads, compressor horsepower and vessel design pressures and temperatures are shown when necessary for clarity. In addition, major components of control loops are usually shown along with key utilities on process flow diagrams. Piping and instrument diagrams (P&IDs) may be the more appropriate type of diagrams to show some of the above details and to display the information for the piping designer and engineering staff. The P&Ids are to be used to describe the relationships between equipment and instrumentation as well as other relevant information that will enhance clarity. Computer software programs which do P&Ids or other diagrams useful to the information package, may be used to help meet this requirement. The information pertaining to process equipment design must be documented. In other words, what were the codes and standards relied on to establish good engineering practice. These codes and standards are published by such organizations as the American Society of Mechanical Engineers, American Petroleum Institute, American National Standards Institute, National Fire Protection Association, American Society for Testing and Materials, National Board of Boiler and Pressure Vessel Inspectors, National Association of Corrosion Engineers, American Society of Exchange Manufacturers Association, and model building code groups.

In addition, various engineering societies issue technical reports which impact process design. For example, the American Institute of Chemical Engineers has published technical reports on topics such as two phase flow for venting devices. This type of technically recognized report would constitute good engineering practice. For existing equipment designed and constructed many years ago in accordance with the codes and standards available at that time and no longer in general use today, the employer must document which codes and standards were used and that the design and construction along with the testing, inspection and operation are still suitable for the intended use. Where the process technology requires a design which departs from the applicable codes and standards, the employer must document that the design and construction is suitable for the intended purpose.

(4) Process hazard analysis. A process hazard analysis (PHA), sometimes called a process hazard evaluation, is one of the most important elements of the process safety management program. A PHA is an organized and systematic effort to identify and analyze the significance of potential hazards associated with the processing or handling of highly hazardous chemicals. A PHA provides information which will assist employers and employees in making decisions for improving safety and reducing the consequences of unwanted or unplanned releases of hazardous chemicals. A PHA is directed toward analyzing potential causes and consequences of fires, explosions, releases of toxic or flammable chemicals and major spills of hazardous chemicals. The PHA focuses on equipment, instrumentation, utilities, human actions (routine and nonroutine), and external factors that might impact the process. These considerations assist in determining the hazards and potential failure points or failure modes in a process. The selection of a PHA methodology or technique will be influenced by many factors including the amount of existing knowledge about the process. Is it a process that has been operated for a long period of time with little or no innovation and extensive experience has been generated with its use? Or, is it a new process or one which has been changed frequently by the inclusion of innovative features? Also, the size and complexity of the process will influence the decision as to the appropriate PHA methodology to use. All PHA methodologies are subject to certain limitations. For example, the checklist methodology works well when the process is very stable and no changes are made, but it is not as effective when the process has undergone extensive change. The checklist may miss the most recent changes and consequently the changes would not be evaluated. Another limitation to be considered concerns the assumptions made by the team or analyst. The PHA is dependent on good judgment and the assumptions made during the study need to be documented and understood by the team and reviewer and kept for a future PHA. The team conducting the PHA need to understand the methodology that is going to be used. A PHA team can vary in size from two people to a number of people with varied operational and technical backgrounds. Some team members may only be a part of the team for a limited time. The team leader needs to be fully knowledgeable in the proper implementation of the PHA methodology that is to be used and should be impartial in the evaluation. The other full or part time team members need to provide the team with expertise in areas such as process technology, process design, operating procedures and practices, including how the work is actually performed, alarms, emergency procedures, instrumentation, maintenance procedures, both routine and nonroutine tasks, including how the tasks are authorized, procurement of parts and supplies, safety and health, and any other relevant subject as the need dictates. At least one team member must be familiar with the process. The ideal team will have an intimate knowledge of the standards, codes, specifications and regulations applicable to the process being studied. The selected team members need to be compatible and the team leader needs to be able to manage the team, and the PHA study. The team needs to be able to work together while benefiting from the expertise of others on the team or outside the team, to resolve issues, and to forge a consensus on the findings of the study and recommendations. The application of a PHA to a process may involve the use of different methodologies for various parts of the process. For example, a process involving a series of unit operations of varying sizes, complexities, and ages may use different methodologies and team members for each operation. Then the conclusions can be integrated into one final study and evaluation. A more specific example is the use of a checklist PHA for a standard boiler or heat exchanger and the use of a hazard and operability PHA for the overall process. Also, for batch type processes like custom batch operations, a generic PHA of a representative batch may be used where there are only small changes of monomer or other ingredient ratios and the chemistry is documented for the full range and ratio of batch ingredients. Another process that might consider using a generic type of PHA is a gas plant. Often these plants are simply moved from site to site and therefore, a generic PHA may be used for these movable plants. Also, when an employer has several similar size gas plants and no sour gas is being processed at the site, then a generic PHA is feasible as long as the variations of the individual sites are accounted for in the PHA. Finally, when an employer has a large continuous process which has several control rooms for different portions of the process such as for a distillation tower and a blending operation, the employer may wish to do each segment separately and then integrate the final results. Additionally, small businesses which are covered by this rule, will often have processes that have less storage volume, less capacity, and less complicated than processes at a large facility. Therefore, WISHA would anticipate that the less complex methodologies would be used to meet the process hazard analysis criteria in the standard. These process hazard analyses can be done in less time and with a few people being involved. A less complex process generally means that less data, P&Ids, and process information is needed to perform a process hazard analysis. Many small businesses have processes that are not unique, such as cold storage lockers or water treatment facilities. Where employer associations have a number of members with such facilities, a generic PHA, evolved from a checklist or what-if questions, could be developed and used by each employer effectively to reflect his/her particular process; this would simplify compliance for them. When the employer has a number of processes which require a PHA, the employer must set up a priority system of which PHAs to conduct first. A preliminary or gross hazard analysis may be useful in prioritizing the processes that the employer has determined are subject to coverage by the process safety

management standard. Consideration should first be given to those processes with the potential of adversely affecting the largest number of employees. This prioritizing should consider the potential severity of a chemical release, the number of potentially affected employees, the operating history of the process such as the frequency of chemical releases, the age of the process and any other relevant factors. These factors would suggest a ranking order and would suggest either using a weighing factor system or a systematic ranking method. The use of a preliminary hazard analysis would assist an employer in determining which process should be of the highest priority and thereby the employer would obtain the greatest improvement in safety at the facility. Detailed guidance on the content and application of process hazard analysis methodologies is available from the American Institute of Chemical Engineers' Center for Chemical Process Safety (see WAC 296-67-293, Appendix D).

(5) Operating procedures and practices. Operating procedures describe tasks to be performed, data to be recorded, operating conditions to be maintained, samples to be collected, and safety and health precautions to be taken. The procedures need to be technically accurate, understandable to employees, and revised periodically to ensure that they reflect current operations. The process safety information package is to be used as a resource to better assure that the operating procedures and practices are consistent with the known hazards of the chemicals in the process and that the operating parameters are accurate. Operating procedures should be reviewed by engineering staff and operating personnel to ensure that they are accurate and provide practical instructions on how to actually carry out job duties safely. Operating procedures will include specific instructions or details on what steps are to be taken or followed in carrying out the stated procedures. These operating instructions for each procedure should include the applicable safety precautions and should contain appropriate information on safety implications. For example, the operating procedures addressing operating parameters will contain operating instructions about pressure limits, temperature ranges, flow rates, what to do when an upset condition occurs, what alarms and instruments are pertinent if an upset condition occurs, and other subjects. Another example of using operating instructions to properly implement operating procedures is in starting up or shutting down the process. In these cases, different parameters will be required from those of normal operation. These operating instructions need to clearly indicate the distinctions between startup and normal operations such as the appropriate allowances for heating up a unit to reach the normal operating parameters. Also the operating instructions need to describe the proper method for increasing the temperature of the unit until the normal operating temperature parameters are achieved. Computerized process control systems add complexity to operating instructions. These operating instructions need to describe the logic of the software as well as the relationship between the equipment and the control system; otherwise, it may not be apparent to the operator. Operating procedures and instructions are important for training operating personnel. The operating procedures are often viewed as the standard operating practices (SOPs) for operations. Control room personnel and operating staff, in general, need to have a full understanding of operating procedures. If workers are not fluent in English then procedures and instructions need to be prepared in a second language understood by the workers. In addition, operating procedures need to be changed when there is a change in the process as a result of the management of change procedures. The consequences of operating procedure changes need to be fully evaluated and the information conveyed to the personnel. For example, mechanical changes to the process made by the maintenance department (like changing a valve from steel to brass or other subtle changes) need to be evaluated to determine if operating procedures and practices also need to be changed. All management of change actions must be coordinated and integrated with current operating procedures and operating personnel must be oriented to the changes in procedures before the change is made. When the process is shut down in order to make a change, then the operating procedures must be updated before startup of the process. Training in how to handle upset conditions must be accomplished as well as what operating personnel are to do in emergencies such as when a pump seal fails or a pipeline ruptures. Communication between operating personnel and workers performing work within the process area, such as nonroutine tasks, also must be maintained. The hazards of the tasks are to be conveyed to operating personnel in accordance with established procedures and to those performing the actual tasks. When the work is completed, operating personnel should be informed to provide closure on the job.

(6) Employee training. All employees, including maintenance and contractor employees, involved with highly hazardous chemicals need to fully understand the safety and health hazards of the chemicals and processes they work with for the protection of themselves, their fellow employees and the citizens of nearby communities. Training conducted in compliance with WAC 296-800-170, chemical hazard communication program standard, will help employees to be more knowledgeable about the chemicals they work with as well as familiarize them with reading and understanding MSDS. However, additional training in subjects such as operating procedures and safety work practices, emergency evacuation and response, safety procedures, routine and nonroutine work authorization activities, and other areas pertinent to process safety and health will need to be covered by an employer's training program. In establishing their training programs, employers must clearly define the employees to be trained and what subjects are to be covered in their training. Employers in setting up their training program will need to clearly establish the goals and objectives they wish to achieve with the training that they provide to their employees. The learning goals or objectives should be written in clear measurable terms before the training begins. These goals and objectives need to be tailored to each of the specific training modules or segments. Employers should describe the important actions and conditions under which the employee will demonstrate competence or knowledge as well as what is acceptable performance. Hands-on-training where employees are able to use their senses beyond listening, will enhance learning. For example, operating personnel, who will work in a control room or at control panels, would benefit by being trained at a simulated control panel or panels. Upset conditions of various types could be displayed on the simulator, and then the employee could go through the proper operating

procedures to bring the simulator panel back to the normal operating parameters. A training environment could be created to help the trainee feel the full reality of the situation but, of course, under controlled conditions. This realistic type of training can be very effective in teaching employees correct procedures while allowing them to also see the consequences of what might happen if they do not follow established operating procedures. Other training techniques using videos or on-the-job training can also be very effective for teaching other job tasks, duties, or other important information. An effective training program will allow the employee to fully participate in the training process and to practice their skill or knowledge. Employers need to periodically evaluate their training programs to see if the necessary skills, knowledge, and routines are being properly understood and implemented by their trained employees. The means or methods for evaluating the training should be developed along with the training program goals and objectives. Training program evaluation will help employers to determine the amount of training their employees understood, and whether the desired results were obtained. If, after the evaluation, it appears that the trained employees are not at the level of knowledge and skill that was expected, the employer will need to revise the training program, provide retraining, or provide more frequent refresher training sessions until the deficiency is resolved. Those who conducted the training and those who received the training should also be consulted as to how best to improve the training process. If there is a language barrier, the language known to the trainees should be used to reinforce the training messages and information. Careful consideration must be given to assure that employees including maintenance and contract employees receive current and updated training. For example, if changes are made to a process, impacted employees must be trained in the changes and understand the effects of the changes on their job tasks (e.g., any new operating procedures pertinent to their tasks). Additionally, as already discussed the evaluation of the employee's absorption of training will certainly influence the need for training.

(7) Contractors. Employers who use contractors to perform work in and around processes that involve highly hazardous chemicals, will need to establish a screening process so that they hire and use contractors who accomplish the desired job tasks without compromising the safety and health of employees at a facility. For contractors, whose safety performance on the job is not known to the hiring employer, the employer will need to obtain information on injury and illness rates and experience and should obtain contractor references. Additionally, the employer must assure that the contractor has the appropriate job skills, knowledge and certifications (such as for pressure vessel welders). Contractor work methods and experiences should be evaluated. For example, does the contractor conducting demolition work swing loads over operating processes or does the contractor avoid such hazards? Maintaining a site injury and illness log for contractors is another method employers must use to track and maintain current knowledge of work activities involving contract employees working on or adjacent to covered processes. Injury and illness logs of both the employer's employees and contract employees allow an employer to have full knowledge of process injury and illness experience. This log will also contain information which will be of use to those auditing process safety management compliance and those involved in incident investigations. Contract employees must perform their work safely. Considering that contractors often perform very specialized and potentially hazardous tasks such as confined space entry activities and nonroutine repair activities it is quite important that their activities be controlled while they are working on or near a covered process. A permit system or work authorization system for these activities would also be helpful to all affected employers. The use of a work authorization system keeps an employer informed of contract employee activities, and as a benefit the employer will have better coordination and more management control over the work being performed in the process area. A well run and well maintained process where employee safety is fully recognized will benefit all of those who work in the facility whether they be contract employees or employees of the owner.

(8) Prestartup safety. For new processes, the employer will find a PHA helpful in improving the design and construction of the process from a reliability and quality point of view. The safe operation of the new process will be enhanced by making use of the PHA recommendations before final installations are completed. P&Ids are to be completed along with having the operating procedures in place and the operating staff trained to run the process before startup. The initial startup procedures and normal operating procedures need to be fully evaluated as part of the prestartup review to assure a safe transfer into the normal operating mode for meeting the process parameters. For existing processes that have been shutdown for turnaround, or modification, etc., the employer must assure that any changes other than "replacement in kind" made to the process during shutdown go through the management of change procedures. P&Ids will need to be updated as necessary, as well as operating procedures and instructions. If the changes made to the process during shutdown are significant and impact the training program, then operating personnel as well as employees engaged in routine and nonroutine work in the process area may need some refresher or additional training in light of the changes. Any incident investigation recommendations, compliance audits or PHA recommendations need to be reviewed as well to see what impacts they may have on the process before beginning the startup.

(9) Mechanical integrity. Employers will need to review their maintenance programs and schedules to see if there are areas where "breakdown" maintenance is used rather than an ongoing mechanical integrity program. Equipment used to process, store, or handle highly hazardous chemicals needs to be designed, constructed, installed, and maintained to minimize the risk of releases of such chemicals. This requires that a mechanical integrity program be in place to assure the continued integrity of process equipment. Elements of a mechanical integrity program include the identification and categorization of equipment and instrumentation, inspections and tests, testing and inspection frequencies, development of maintenance procedures, training of maintenance personnel, the establishment of criteria for acceptable test results, documentation of test and inspection results, and documentation of manufacturer recommendations as to meantime to failure for equipment and instrumentation. The first line of defense an employer has available is to operate and maintain the pro-

cess as designed, and to keep the chemicals contained. This line of defense is backed up by the next line of defense which is the controlled release of chemicals through venting to scrubbers or flares, or to surge or overflow tanks which are designed to receive such chemicals, etc. These lines of defense are the primary lines of defense or means to prevent unwanted releases. The secondary lines of defense would include fixed fire protection systems like sprinklers, water spray, or deluge systems, monitor guns, etc., dikes, designed drainage systems, and other systems which would control or mitigate hazardous chemicals once an unwanted release occurs. These primary and secondary lines of defense are what the mechanical integrity program needs to protect and strengthen these primary and secondary lines of defenses where appropriate. The first step of an effective mechanical integrity program is to compile and categorize a list of process equipment and instrumentation for inclusion in the program. This list would include pressure vessels, storage tanks, process piping, relief and vent systems, fire protection system components, emergency shutdown systems, and alarms and interlocks and pumps. For the categorization of instrumentation and the listed equipment the employer would prioritize which pieces of equipment require closer scrutiny than others. Meantime to failure of various instrumentation and equipment parts would be known from the manufacturer's data or the employer's experience with the parts, which would then influence the inspection and testing frequency and associated procedures. Also, applicable codes and standards such as the National Board Inspection Code, or those from the American Society for Testing and Material, American Petroleum Institute, National Fire Protection Association, American National Standards Institute, American Society of Mechanical Engineers, and other groups, provide information to help establish an effective testing and inspection frequency, as well as appropriate methodologies. The applicable codes and standards provide criteria for external inspections for such items as foundation and supports, anchor bolts, concrete or steel supports, guy wires, nozzles and sprinklers, pipe hangers, grounding connections, protective coatings and insulation, and external metal surfaces of piping and vessels, etc. These codes and standards also provide information on methodologies for internal inspection, and a frequency formula based on the corrosion rate of the materials of construction. Also, erosion both internal and external needs to be considered along with corrosion effects for piping and valves. Where the corrosion rate is not known, a maximum inspection frequency is recommended, and methods of developing the corrosion rate are available in the codes. Internal inspections need to cover items such as vessel shell, bottom and head; metallic linings; nonmetallic linings; thickness measurements for vessels and piping; inspection for erosion, corrosion, cracking and bulges; internal equipment like trays, baffles, sensors, and screens for erosion, corrosion or cracking and other deficiencies. Some of these inspections may be performed by state or local government inspectors under state and local statutes. However, each employer needs to develop procedures to ensure that tests and inspections are conducted properly and that consistency is maintained even where different employees may be involved. Appropriate training is to be provided to maintenance personnel to ensure that they understand the preventive maintenance program procedures, safe practices, and the proper use and application of special equipment or unique tools that may be required. This training is part of the overall training program called for in the standard. A quality assurance system is needed to help ensure that the proper materials of construction are used, that fabrication and inspection procedures are proper, and that installation procedures recognize field installation concerns. The quality assurance program is an essential part of the mechanical integrity program and will help to maintain the primary and secondary lines of defense that have been designed into the process to prevent unwanted chemical releases or those which control or mitigate a release. "As built" drawings, together with certifications of coded vessels and other equipment, and materials of construction need to be verified and retained in the quality assurance documentation. Equipment installation jobs need to be properly inspected in the field for use of proper materials and procedures and to assure that qualified craftsmen are used to do the job. The use of appropriate gaskets, packing, bolts, valves, lubricants, and welding rods need to be verified in the field. Also procedures for installation of safety devices need to be verified, such as the torque on the bolts on ruptured disc installations, uniform torque on flange bolts, proper installation of pump seals, etc. If the quality of parts is a problem, it may be appropriate to conduct audits of the equipment supplier's facilities to better assure proper purchases of required equipment which is suitable for its intended service. Any changes in equipment that may become necessary will need to go through the management of change procedures.

(10) Nonroutine work authorizations. Nonroutine work which is conducted in process areas needs to be controlled by the employer in a consistent manner. The hazards identified involving the work that is to be accomplished must be communicated to those doing the work, but also to those operating personnel whose work could affect the safety of the process. A work authorization notice or permit must have a procedure that describes the steps the maintenance supervisor, contractor representative or other person needs to follow to obtain the necessary clearance to get the job started. The work authorization procedures need to reference and coordinate, as applicable, lockout/tagout procedures, line breaking procedures, confined space entry procedures and hot work authorizations. This procedure also needs to provide clear steps to follow once the job is completed in order to provide closure for those that need to know the job is now completed and equipment can be returned to normal.

(11) Managing change. To properly manage changes to process chemicals, technology, equipment and facilities, one must define what is meant by change. In this process safety management standard, change includes all modifications to equipment, procedures, raw materials and processing conditions other than "replacement in kind." These changes need to be properly managed by identifying and reviewing them prior to implementation of the change. For example, the operating procedures contain the operating parameters (pressure limits, temperature ranges, flow rates, etc.) and the importance of operating within these limits. While the operator must have the flexibility to maintain safe operation within the established parameters, any operation outside of these parameters requires review and approval by a written management of change procedure. Management of change covers such as

changes in process technology and changes to equipment and instrumentation. Changes in process technology can result from changes in production rates, raw materials, experimentation, equipment unavailability, new equipment, new product development, change in catalyst and changes in operating conditions to improve yield or quality. Equipment changes include among others change in materials of construction, equipment specifications, piping prearrangements, experimental equipment, computer program revisions and changes in alarms and interlocks. Employers need to establish means and methods to detect both technical changes and mechanical changes. Temporary changes have caused a number of catastrophes over the years, and employers need to establish ways to detect temporary changes as well as those that are permanent. It is important that a time limit for temporary changes be established and monitored since, without control, these changes may tend to become permanent. Temporary changes are subject to the management of change provisions. In addition, the management of change procedures are used to insure that the equipment and procedures are returned to their original or designed conditions at the end of the temporary change. Proper documentation and review of these changes is invaluable in assuring that the safety and health considerations are being incorporated into the operating procedures and the process. Employers may wish to develop a form or clearance sheet to facilitate the processing of changes through the management of change procedures. A typical change form may include a description and the purpose of the change, the technical basis for the change, safety and health considerations, documentation of changes for the operating procedures, maintenance procedures, inspection and testing, P&Ids, electrical classification, training and communications, prestartup inspection, duration if a temporary change, approvals and authorization. Where the impact of the change is minor and well understood, a check list reviewed by an authorized person with proper communication to others who are affected may be sufficient. However, for a more complex or significant design change, a hazard evaluation procedure with approvals by operations, maintenance, and safety departments may be appropriate. Changes in documents such as P&Ids, raw materials, operating procedures, mechanical integrity programs, electrical classifications, etc., need to be noted so that these revisions can be made permanent when the drawings and procedure manuals are updated. Copies of process changes need to be kept in an accessible location to ensure that design changes are available to operating personnel as well as to PHA team members when a PHA is being done or one is being updated.

(12) Investigation of incidents. Incident investigation is the process of identifying the underlying causes of incidents and implementing steps to prevent similar events from occurring. The intent of an incident investigation is for employers to learn from past experiences and thus avoid repeating past mistakes. The incidents for which WISHA expects employers to become aware and to investigate are the types of events which result in or could reasonably have resulted in a catastrophic release. Some of the events are sometimes referred to as "near misses," meaning that a serious consequence did not occur, but could have. Employers need to develop in-house capability to investigate incidents that occur in their facilities. A team needs to be assembled by the employer and trained in the techniques of investigation including how to conduct interviews of witnesses, needed documentation and report writing. A multidisciplinary team is better able to gather the facts of the event and to analyze them and develop plausible scenarios as to what happened, and why. Team members should be selected on the basis of their training, knowledge and ability to contribute to a team effort to fully investigate the incident. Employees in the process area where the incident occurred should be consulted, interviewed, or made a member of the team. Their knowledge of the events form a significant set of facts about the incident which occurred. The report, its findings and recommendations are to be shared with those who can benefit from the information. The cooperation of employees is essential to an effective incident investigation. The focus of the investigation should be to obtain facts, and not to place blame. The team and the investigation process should clearly deal with all involved individuals in a fair, open, and consistent manner.

(13) Emergency preparedness. Each employer must address what actions employees are to take when there is an unwanted release of highly hazardous chemicals. Emergency preparedness or the employer's tertiary (third) lines of defense are those that will be relied on along with the secondary lines of defense when the primary lines of defense which are used to prevent an unwanted release fail to stop the release. Employers will need to decide if they want employees to handle and stop small or minor incidental releases. Whether they wish to mobilize the available resources at the plant and have them brought to bear on a more significant release. Or whether employers want their employees to evacuate the danger area and promptly escape to a preplanned safe zone area, and allow the local community emergency response organizations to handle the release. Or whether the employer wants to use some combination of these actions. Employers will need to select how many different emergency preparedness or tertiary lines of defense they plan to have and then develop the necessary plans and procedures, and appropriately train employees in their emergency duties and responsibilities and then implement these lines of defense. Employers at a minimum must have an emergency action plan which will facilitate the prompt evacuation of employees due to an unwanted release of a highly hazardous chemical. This means that the employer will have a plan that will be activated by an alarm system to alert employees when to evacuate and, that employees who are physically impaired, will have the necessary support and assistance to get them to the safe zone as well. The intent of these requirements is to alert and move employees to a safe zone quickly. Delaying alarms or confusing alarms are to be avoided. The use of process control centers or similar process buildings in the process area as safe areas is discouraged. Recent catastrophes have shown that a large life loss has occurred in these structures because of where they have been sited and because they are not necessarily designed to withstand over-pressures from shockwaves resulting from explosions in the process area. Unwanted incidental releases of highly hazardous chemicals in the process area must be addressed by the employer as to what actions employees are to take. If the employer wants employees to evacuate the area, then the emergency action plan will be activated. For outdoor processes where wind direction is important for selecting the safe route to a refuge

area, the employer should place a wind direction indicator such as a wind sock or pennant at the highest point that can be seen throughout the process area. Employees can move in the direction of cross wind to upwind to gain safe access to the refuge area by knowing the wind direction. If the employer wants specific employees in the release area to control or stop the minor emergency or incidental release, these actions must be planned for in advance and procedures developed and implemented. Preplanning for handling incidental releases for minor emergencies in the process area needs to be done, appropriate equipment for the hazards must be provided, and training conducted for those employees who will perform the emergency work before they respond to handle an actual release. The employer's training program, including the hazard communication standard training is to address the training needs for employees who are expected to handle incidental or minor releases. Preplanning for releases that are more serious than incidental releases is another important line of defense to be used by the employer. When a serious release of a highly hazardous chemical occurs, the employer through preplanning will have determined in advance what actions employees are to take. The evacuation of the immediate release area and other areas as necessary would be accomplished under the emergency action plan. If the employer wishes to use plant personnel such as a fire brigade, spill control team, a hazardous materials team, or use employees to render aid to those in the immediate release area and control or mitigate the incident, these actions are covered by chapter 296-824 WAC, Emergency response to hazardous substance releases. If outside assistance is necessary, such as through mutual aid agreements between employers or local government emergency response organizations, these emergency responders are also covered by chapter 296-824 WAC. The safety and health protections required for emergency responders are the responsibility of their employers and of the on-scene incident commander. Responders may be working under very hazardous conditions and therefore the objective is to have them competently led by an on-scene incident commander and the commander's staff, properly equipped to do their assigned work safely, and fully trained to carry out their duties safely before they respond to an emergency. Drills, training exercises, or simulations with the local community emergency response planners and responder organizations is one means to obtain better preparedness. This close cooperation and coordination between plant and local community emergency preparedness managers will also aid the employer in complying with the Environmental Protection Agency's risk management plan criteria. One effective way for medium to large facilities to enhance coordination and communication during emergencies for on plant operations and with local community organizations is for employers to establish and equip an emergency control center. The emergency control center would be sited in a safe zone area so that it could be occupied throughout the duration of an emergency. The center would serve as the major communication link between the on-scene incident commander and plant or corporate management as well as with the local community officials. The communication equipment in the emergency control center should include a network to receive and transmit information by telephone, radio, or other means. It is important to have a backup communication network in case of power failure or one communication means fails. The center should also be equipped with the plant layout and community maps, utility drawings including fire water, emergency lighting, appropriate reference materials such as a government agency notification list, company personnel phone list, SARA Title III reports and material safety data sheets, emergency plans and procedures manual, a listing with the location of emergency response equipment, mutual aid information, and access to meteorological or weather condition data and any dispersion modeling data.

(14) Compliance audits. Employers need to select a trained individual or assemble a trained team of people to audit the process safety management system and program. A small process or plant may need only one knowledgeable person to conduct an audit. The audit is to include an evaluation of the design and effectiveness of the process safety management system and a field inspection of the safety and health conditions and practices to verify that the employer's systems are effectively implemented. The audit should be conducted or led by a person knowledgeable in audit techniques and who is impartial towards the facility or area being audited. The essential elements of an audit program include planning, staffing, conducting the audit, evaluation and corrective action, follow-up and documentation. Planning in advance is essential to the success of the auditing process. Each employer needs to establish the format, staffing, scheduling, and verification methods prior to conducting the audit. The format should be designed to provide the lead auditor with a procedure or checklist which details the requirements of each section of the standard. The names of the audit team members should be listed as part of the format as well. The checklist, if properly designed, could serve as the verification sheet which provides the auditor with the necessary information to expedite the review and assure that no requirements of the standard are omitted. This verification sheet format could also identify those elements that will require evaluation or a response to correct deficiencies. This sheet could also be used for developing the follow-up and documentation requirements. The selection of effective audit team members is critical to the success of the program. Team members should be chosen for their experience, knowledge, and training and should be familiar with the processes and with auditing techniques, practices, and procedures. The size of the team will vary depending on the size and complexity of the process under consideration. For a large, complex, highly instrumented plant, it may be desirable to have team members with expertise in process engineering and design, process chemistry, instrumentation and computer controls, electrical hazards and classifications, safety and health disciplines, maintenance, emergency preparedness, warehousing or shipping, and process safety auditing. The team may use part-time members to provide for the depth of expertise required as well as for what is actually done or followed, compared to what is written. An effective audit includes a review of the relevant documentation and process safety information, inspection of the physical facilities, and interviews with all levels of plant personnel. Utilizing the audit procedure and checklist developed in the preplanning stage, the audit team can systematically analyze compliance with the provisions of the standard and any other corporate policies that are relevant. For example, the audit team will review all aspects of

the training program as part of the overall audit. The team will review the written training program for adequacy of content, frequency of training, effectiveness of training in terms of its goals and objectives as well as to how it fits into meeting the standard's requirements, documentation, etc. Through interviews, the team can determine the employee's knowledge and awareness of the safety procedures, duties, rules, emergency response assignments, etc. During the inspection, the team can observe actual practices such as safety and health policies, procedures, and work authorization practices. This approach enables the team to identify deficiencies and determine where corrective actions or improvements are necessary. An audit is a technique used to gather sufficient facts and information, including statistical information, to verify compliance with standards. Auditors should select as part of their preplanning a sample size sufficient to give a degree of confidence that the audit reflects the level of compliance with the standard. The audit team, through this systematic analysis, should document areas which require corrective action as well as those areas where the process safety management system is effective and working in an effective manner. This provides a record of the audit procedures and findings, and serves as a baseline of operation data for future audits. It will assist future auditors in determining changes or trends from previous audits. Corrective action is one of the most important parts of the audit. It includes not only addressing the identified deficiencies, but also planning, followup, and documentation. The corrective action process normally begins with a management review of the audit findings. The purpose of this review is to determine what actions are appropriate, and to establish priorities, timetables, resource allocations, and requirements and responsibilities. In some cases, corrective action may involve a simple change in procedure or minor maintenance effort to remedy the concern. Management of change procedures need to be used, as appropriate, even for what may seem to be a minor change. Many of the deficiencies can be acted on promptly, while some may require engineering studies or indepth review of actual procedures and practices. There may be instances where no action is necessary and this is a valid response to an audit finding. All actions taken, including an explanation where no action is taken on a finding, needs to be documented as to what was done and why. It is important to assure that each deficiency identified is addressed, the corrective action to be taken noted, and the audit person or team responsible be properly documented by the employer. To control the corrective action process, the employer should consider the use of a tracking system. This tracking system might include periodic status reports shared with affected levels of management, specific reports such as completion of an engineering study, and a final implementation report to provide closure for audit findings that have been through management of change, if appropriate, and then shared with affected employees and management. This type of tracking system provides the employer with the status of the corrective action. It also provides the documentation required to verify that appropriate corrective actions were taken on deficiencies identified in the audit.

[Statutory Authority: RCW 49.17.010, [49.17].040, [49.17].050, and [49.17].060. 02-20-034, § 296-67-291, filed 9/24/02, effective 10/1/02. Statutory Authority: RCW 49.17.010, [49.17].040, and [49.17].050. 01-11-038, § 296-67-291, filed 5/9/01, effective 9/1/01. Statutory Authority: Chapter 49.17 RCW. 93-21-075 (Order 93-06), § 296-67-291, filed 10/20/93, effective 12/1/93; 92-17-022 (Order 92-06), § 296-67-291, filed 8/10/92, effective 9/10/92.]

WAC 296-67-293 Appendix D—Sources of further information (nonmandatory). (1) Center for Chemical Process Safety, American Institute of Chemical Engineers, 345 East 47th Street, New York, NY 10017, (212) 705-7319.

(2) "Guidelines for Hazard Evaluation Procedures," American Institute of Chemical Engineers; 345 East 47th Street, New York, NY 10017.

(3) "Guidelines for Technical Management of Chemical Process Safety," Center for Chemical Process Safety of the American Institute of Chemical Engineers; 345 East 47th Street, New York, NY 10017.

(4) "Evaluating Process Safety in the Chemical Industry," Chemical Manufacturers Association; 2501 M Street NW, Washington, DC 20037.

(5) "Safe Warehousing of Chemicals," Chemical Manufacturers Association; 2501 M Street NW, Washington, D.C. 20037.

(6) "Management of Process Hazards," American Petroleum Institute (API Recommended Practice 750); 1220 L Street, N.W., Washington, D.C. 20005.

(7) "Improving Owner and Contractor Safety Performance," American Petroleum Institute (API Recommended Practice 2220); API, 1220 L Street N.W., Washington, D.C. 20005.

(8) Chemical Manufacturers Association (CMA's Manager Guide), First Edition, September 1991; CMA, 2501 M Street, N.W., Washington, D.C. 20037.

(9) "Improving Construction Safety Performance," Report A-3, The Business Roundtable; The Business Roundtable, 200 Park Avenue, New York, NY 10166. (Report includes criteria to evaluate contractor safety performance and criteria to enhance contractor safety performance).

(10) "Recommended Guidelines for Contractor Safety and Health," Texas Chemical Council; Texas Chemical Council, 1402 Nueces Street, Austin, TX 78701-1534.

(11) "Loss Prevention in the Process Industries," Volumes I and II; Frank P. Lees, Butterworth; London 1983.

(12) "Safety and Health Program Management Guidelines," 1989; U.S. Department of Labor, Occupational Safety and Health Administration.

(13) "Safety and Health Guide for the Chemical Industry," 1986, (OSHA 3091); U.S. Department of Labor, Occupational Safety and Health Administration; 200 Constitution Avenue, N.W., Washington, D.C. 20210.

(14) "Review of Emergency Systems," June 1988; U.S. Environmental Protection Agency (EPA), Office of Solid Waste and Emergency Response, Washington, D.C. 20460.

(15) "Technical Guidance for Hazards Analysis, Emergency Planning for Extremely Hazardous Substances," December 1987; U.S. Environmental Protection Agency (EPA), Federal Emergency Management Administration (FEMA) and U.S. Department of Transportation (DOT), Washington, D.C. 20460.

(16) "Accident Investigation*** A New Approach," 1983, National Safety Council; 444 North Michigan Avenue, Chicago, IL 60611-3991.

(17) "Fire Explosion Index Hazard Classification Guide," 6th Edition, May 1987, Dow Chemical Company; Midland, Michigan 48674.

(18) "Chemical Exposure Index," May 1988, Dow Chemical Company; Midland, Michigan 48674.

[Statutory Authority: Chapter 49.17 RCW. 92-17-022 (Order 92-06), § 296-67-293, filed 8/10/92, effective 9/10/92.]

Chapter 296-78 WAC

SAFETY STANDARDS FOR SAWMILLS AND WOODWORKING OPERATIONS

WAC

296-78-500 Foreword.
296-78-505 Definitions applicable to this chapter.
296-78-510 Education and first-aid standards.
296-78-515 Management's responsibility.
296-78-520 Employee's responsibility.
296-78-525 Accident-prevention programs.
296-78-530 Safety and health committee plan.
296-78-535 Safety bulletin board.
296-78-540 First-aid training and certification.
296-78-545 First-aid supplies.
296-78-550 First-aid station.
296-78-560 Safe place standards.
296-78-565 Log dumps and ponds—Headmills.
296-78-56501 Log dumps and ponds.
296-78-56503 Log hauls.
296-78-56505 Boats and mechanical devices on waters.
296-78-56507 Log decks.
296-78-56509 Mechanical barkers.
296-78-56511 Head rigs and feed works.
296-78-56513 Log carriages.
296-78-570 Band saws—Saws.
296-78-575 Circular saws.
296-78-580 Edgers.
296-78-585 Equalizer saws.
296-78-590 Gang saws and re-saws.
296-78-595 Jump saws.
296-78-600 Trimmer and slasher saws.
296-78-605 Swing saws.
296-78-610 Circular saws, speeds, repairs.
296-78-615 Saw filing and grinding rooms and equipment.
296-78-620 Miscellaneous woodworking machines—Planers, stickers, molders, matchers.
296-78-625 Planers (stave and headings).
296-78-630 Stave croziers.
296-78-635 Jointers.
296-78-640 Jointers (stave and heading).
296-78-645 Wood shapers.
296-78-650 Boring and mortising machines.
296-78-655 Tenoning machines.
296-78-660 Lathe (pail and barrel).
296-78-665 Sanding machines.
296-78-670 Glue machines.
296-78-675 Lath mills.
296-78-680 Veneer and plywood plants—Peeling and barking.
296-78-685 Veneer lathe.
296-78-690 Veneer slicer and cutter.
296-78-695 Veneer clipper.
296-78-700 Veneer wringer (swede).
296-78-705 The shake and shingle industry.
296-78-70501 Definitions—Terms, general.
296-78-70503 Shake and shingle machinery—General.
296-78-70505 Shake machinery.
296-78-70507 Upright shingle machine.
296-78-70509 Related shake and shingle sawing machinery.
296-78-70511 Safety rules.
296-78-710 Construction and isolated equipment.
296-78-71001 General.
296-78-71003 Floor and wall openings.
296-78-71005 Floors, docks, platforms and runways.
296-78-71007 Footwalks and passageways.
296-78-71009 Stairways and ladders.
296-78-71011 Egress and exit.
296-78-71013 Cableways.
296-78-71015 Tanks and chemicals.
296-78-71017 Dry kilns.
296-78-71019 Exhaust systems.
296-78-71021 Spray painting.
296-78-71023 Lighting.
296-78-71025 Gas piping and appliances.
296-78-715 Mechanical, steam and electrical equipment.
296-78-71501 General provisions.
296-78-71503 Lock out—Tag out.
296-78-71505 Mechanical power transmission apparatus.
296-78-720 Boiler and pressure vessels.
296-78-725 Nonionizing radiation.
296-78-730 Electrical service and equipment.
296-78-735 Elevators, moving walks.
296-78-740 Transportation—Lumber handling equipment—Cranes—Construction.
296-78-745 Electrical equipment.
296-78-750 Chains, wire rope, cables and fiber rope.
296-78-755 Natural and synthetic fiber rope slings.
296-78-760 Synthetic web slings.
296-78-765 Floor operated cranes.
296-78-770 Operators.
296-78-775 Signalpersons.
296-78-780 Repairpersons.
296-78-785 Construction requirements.
296-78-790 Crane platforms and footwalks.
296-78-795 Crane cages.
296-78-800 Crane rail stops, bumpers and fenders.
296-78-805 Crawler locomotive and truck cranes.
296-78-810 Chain and electric hoists.
296-78-815 Monorail hoists.
296-78-820 Air hoists.
296-78-825 Jib, pillar, and portable floor cranes, crabs, and winches.
296-78-830 Standard crane hand signals—Illustrations.
296-78-835 Vehicles.
296-78-840 Loading, piling, storage and conveying.
296-78-84001 Loading, piling, storage and conveying—General.
296-78-84003 Conveyors.
296-78-84005 Dry kilns.
296-78-84007 Chippers and hogs.
296-78-84009 Bins and bunkers.
296-78-84011 Burners.

DISPOSITION OF SECTIONS FORMERLY CODIFIED IN THIS CHAPTER

296-78-005 Foreword. [Order 76-7, § 296-78-005, filed 3/1/76; Order 74-28, § 296-78-005, filed 5/7/74; Foreword, effective 6/1/51, filed 3/23/60.] Repealed by 81-18-029 (Order 81-21), filed 8/27/81. Statutory Authority: RCW 49.17.040, 49.17.050 and 49.17.240.

296-78-007 Definitions applicable to this chapter. [Order 74-28, § 296-78-007, filed 5/7/74.] Repealed by 81-18-029 (Order 81-21), filed 8/27/81. Statutory Authority: RCW 49.17.040, 49.17.050 and 49.17.240.

296-78-010 General safety standards. [Rules A-1 through A-19, effective 6/1/51, filed 3/23/60.] Repealed by Order 74-28, filed 5/7/74 and Order 76-7, filed 3/1/76.

296-78-015 Minimum requirements for first aid. [Rule B-1, effective 6/1/51, filed 3/23/60.] Repealed by Order 74-28, filed 5/7/74 and Order 76-7, filed 3/1/76.

296-78-020 First-aid kit. [Rule B-2, effective 6/1/51, filed 3/23/60.] Repealed by Order 74-28, filed 5/7/74 and Order 76-7, filed 3/1/76.

296-78-025 First-aid room. [Rule B-3, effective 6/1/51, filed 3/23/60.] Repealed by Order 74-28, filed 5/7/74 and Order 76-7, filed 3/1/76.

296-78-030 Construction and isolated equipment. [Order 77-12, § 296-78-030, filed 7/11/77; Order 76-7, § 296-78-030, filed 3/1/76; Order 74-28, § 296-78-030, filed 5/7/74; Rules C-1 through C-61, effective 6/1/51, filed 3/23/60.] Repealed by 81-18-029 (Order 81-21), filed 8/27/81. Statutory Authority: RCW 49.17.040, 49.17.050 and 49.17.240.

296-78-035 Mechanical, steam and electrical equipment—General provisions. [Order 74-28, § 296-78-035, filed 5/7/74; Rules D-1 through D-19, effective 6/1/51, filed 3/23/60.] Repealed by 81-18-029 (Order 81-21), filed 8/27/81. Statutory Authority: RCW 49.17.040, 49.17.050 and 49.17.240.

296-78-040 Boiler and pressure vessels. [Order 74-28, § 296-78-040, filed 5/7/74; Rule D-20, effective 6/1/51, filed 3/23/60.] Repealed by 81-18-029 (Order 81-21), filed 8/27/81. Statutory Authority: RCW 49.17.040, 49.17.050 and 49.17.240.

296-78-045 Electrical service and equipment. [Order 74-28, § 296-78-045, filed 5/7/74; Rule D-21, effective 6/1/51, filed

3/23/60.] Repealed by 81-18-029 (Order 81-21), filed 8/27/81. Statutory Authority: RCW 49.17.040, 49.17.050 and 49.17.240.

296-78-050 Electrical utilization—Definitions. [Rule D-22, effective 6/1/51, filed 3/23/60.] Repealed by Order 74-28, filed 5/7/74 and Order 76-7, filed 3/1/76.

296-78-055 Electrical utilization—General requirements—Safety. [Rule D-23, effective 6/1/51, filed 3/23/60.] Repealed by Order 74-28, filed 5/7/74 and Order 76-7, filed 3/1/76.

296-78-060 Electrical utilization—General requirements—Current. [Rule D-24, effective 6/1/51, filed 3/23/60.] Repealed by Order 74-28, filed 5/7/74 and Order 76-7, filed 3/1/76.

296-78-065 Electrical utilization—General requirements—Grounding. [Rule D-25, effective 6/1/51, filed 3/23/60.] Repealed by Order 74-28, filed 5/7/74 and Order 76-7, filed 3/1/76.

296-78-070 Electrical utilization—General requirements—Circuits to be grounded. [Rule D-26, effective 6/1/51, filed 3/23/60.] Repealed by Order 74-28, filed 5/7/74 and Order 76-7, filed 3/1/76.

296-78-075 Electrical utilization—General requirements—Grounding noncurrent-carrying metal parts. [Rule D-27, effective 6/1/51, filed 3/23/60.] Repealed by Order 74-28, filed 5/7/74 and Order 76-7, filed 3/1/76.

296-78-080 Electrical utilization—Working spaces about electrical equipment—Dimensions. [Rule D-28, effective 6/1/51, filed 3/23/60.] Repealed by Order 74-28, filed 5/7/74 and Order 76-7, filed 3/1/76.

296-78-085 Electrical utilization—Guarding or isolating live parts—Inclosure or elevation. [Rule D-29, effective 6/1/51, filed 3/23/60.] Repealed by Order 74-28, filed 5/7/74 and Order 76-7, filed 3/1/76.

296-78-090 Electrical utilization—Separation and barriers. [Rule D-30, effective 6/1/51, filed 3/23/60.] Repealed by Order 74-28, filed 5/7/74 and Order 76-7, filed 3/1/76.

296-78-095 Electrical utilization—Hazardous locations. [Rule D-31, effective 6/1/51, filed 3/23/60.] Repealed by Order 74-28, filed 5/7/74 and Order 76-7, filed 3/1/76.

296-78-100 Electrical utilization—Suitability and size of conductors. [Rule D-32, effective 6/1/51, filed 3/23/60.] Repealed by Order 74-28, filed 5/7/74 and Order 76-7, filed 3/1/76.

296-78-105 Electrical utilization—Fuses and circuit breakers. [Rule D-33, effective 6/1/51, filed 3/23/60.] Repealed by Order 74-28, filed 5/7/74 and Order 76-7, filed 3/1/76.

296-78-110 Electrical utilization—General requirements for switches—Accessibility, marking and installation. [Rule D-34, effective 6/1/51, filed 3/23/60.] Repealed by Order 74-28, filed 5/7/74 and Order 76-7, filed 3/1/76.

296-78-115 Electrical utilization—Guarding switches. [Rule D-35, effective 6/1/51, filed 3/23/60.] Repealed by Order 74-28, filed 5/7/74 and Order 76-7, filed 3/1/76.

296-78-120 Electrical utilization—Platforms and mats. [Rule D-36, effective 6/1/51, filed 3/23/60.] Repealed by Order 74-28, filed 5/7/74 and Order 76-7, filed 3/1/76.

296-78-125 Electrical utilization—Switchboards and panelboards—Control or arrangement. [Rule D-37, effective 6/1/51, filed 3/23/60.] Repealed by Order 74-28, filed 5/7/74 and Order 76-7, filed 3/1/76.

296-78-130 Electrical utilization—Inclosure of parts. [Rule D-38, effective 6/1/51, filed 3/23/60.] Repealed by Order 74-28, filed 5/7/74 and Order 76-7, filed 3/1/76.

296-78-135 Electrical utilization—Motors and motor-driven machinery—Grounding machine frames. [Rule D-39, effective 6/1/51, filed 3/23/60.] Repealed by Order 74-28, filed 5/7/74 and Order 76-7, filed 3/1/76.

296-78-140 Electrical utilization—Mats and platforms. [Rule D-40, effective 6/1/51, filed 3/23/60.] Repealed by Order 74-28, filed 5/7/74 and Order 76-7, filed 3/1/76.

296-78-145 Electrical utilization—Water barrel rheostats prohibited. [Rule D-41, effective 6/1/51, filed 3/23/60.] Repealed by Order 74-28, filed 5/7/74 and Order 76-7, filed 3/1/76.

296-78-150 Electrical utilization—Employees—Safety requirements. [Rule D-42, effective 6/1/51, filed 3/23/60.] Repealed by Order 74-28, filed 5/7/74 and Order 76-7, filed 3/1/76.

296-78-155 Electrical utilization—"Bridging" fuses prohibited. [Rule D-43, effective 6/1/51, filed 3/23/60.] Repealed by Order 74-28, filed 5/7/74 and Order 76-7, filed 3/1/76.

296-78-160 Electrical utilization—Leakage of electricity shall be reported. [Rule D-44, effective 6/1/51, filed 3/23/60.] Repealed by Order 74-28, filed 5/7/74 and Order 76-7, filed 3/1/76.

296-78-162 Electrical utilization—Safe standing room required. [Rule D-45, effective 6/1/51, filed 3/23/60.] Repealed by Order 74-28, filed 5/7/74 and Order 76-7, filed 3/1/76.

296-78-165 Electrical utilization—Use of disconnected wires for starting machinery prohibited. [Rules D-46 through D-53, effective 6/1/51, filed 3/23/60.] Repealed by Order 74-28, filed 5/7/74 and Order 76-7, filed 3/1/76.

296-78-170 Elevators, moving walks and other lifting devices. [Order 76-29, § 296-78-170, filed 9/30/76; Order 74-28, § 296-78-170, filed 5/7/74; Rule D-54, effective 6/1/51, filed 3/23/60.] Repealed by 81-18-029 (Order 81-21), filed 8/27/81. Statutory Authority: RCW 49.17.040, 49.17.050 and 49.17.240.

296-78-175 Platform hoists. [Rule D-55, effective 6/1/51, filed 3/23/60.] Repealed by Order 74-28, filed 5/7/74 and Order 76-7, filed 3/1/76.

296-78-180 Transportation—Lumber handling equipment—Cranes—Construction. [Order 74-28, § 296-78-180, filed 5/7/74; Rule E-1, effective 6/1/51, filed 3/23/60.] Repealed by 81-18-029 (Order 81-21), filed 8/27/81. Statutory Authority: RCW 49.17.040, 49.17.050 and 49.17.240.

296-78-185 Electrical equipment. [Order 74-28, § 296-78-185, filed 5/7/74; Rule E-2, effective 6/1/51, filed 3/23/60.] Repealed by 81-18-029 (Order 81-21), filed 8/27/81. Statutory Authority: RCW 49.17.040, 49.17.050 and 49.17.240.

296-78-190 Chains, wire rope, cables and fiber rope. [Order 74-28, § 296-78-190, filed 5/7/74; Rule E-3, effective 6/1/51, filed 3/23/60.] Repealed by 81-18-029 (Order 81-21), filed 8/27/81. Statutory Authority: RCW 49.17.040, 49.17.050 and 49.17.240.

296-78-195 Floor operated cranes. [Order 74-28, § 296-78-195, filed 5/7/74; Rule E-4, effective 6/1/51, filed 3/23/60.] Repealed by 81-18-029 (Order 81-21), filed 8/27/81. Statutory Authority: RCW 49.17.040, 49.17.050 and 49.17.240.

296-78-200 Operators. [Order 77-12, § 296-78-200, filed 7/11/77; Order 74-28, § 296-78-200, filed 5/7/74; Rule E-5, effective 6/1/51, filed 3/23/60.] Repealed by 81-18-029 (Order 81-21), filed 8/27/81. Statutory Authority: RCW 49.17.040, 49.17.050 and 49.17.240.

296-78-205 Signalmen. [Order 74-28, § 296-78-205, filed 5/7/74; Rule E-6, effective 6/1/51, filed 3/23/60.] Repealed by 81-18-029 (Order 81-21), filed 8/27/81. Statutory Authority: RCW 49.17.040, 49.17.050 and 49.17.240.

296-78-210 Repairmen. [Order 74-28, § 296-78-210, filed 5/7/74; Rule E-7, effective 6/1/51, filed 3/23/60.] Repealed by 81-18-029 (Order 81-21), filed 8/27/81. Statutory Authority: RCW 49.17.040, 49.17.050 and 49.17.240.

296-78-215 Construction requirements. [Order 74-28, § 296-78-215, filed 5/7/74; Rule E-8, effective 6/1/51, filed 3/23/60.] Repealed by 81-18-029 (Order 81-21), filed 8/27/81. Statutory Authority: RCW 49.17.040, 49.17.050 and 49.17.240.

296-78-220 Crane platforms and footwalks. [Order 74-28, § 296-78-220, filed 5/7/74; Rule E-9, effective 6/1/51, filed 3/23/60.] Repealed by 81-18-029 (Order 81-21), filed 8/27/81. Statutory Authority: RCW 49.17.040, 49.17.050 and 49.17.240.

296-78-225 Crane cages. [Order 74-28, § 296-78-225, filed 5/7/74; Rule E-10, effective 6/1/51, filed 3/23/60.] Repealed by 81-18-029 (Order 81-21), filed 8/27/81. Statutory Authority: RCW 49.17.040, 49.17.050 and 49.17.240.

296-78-230 Crane rail stops, bumpers and fenders. [Order 74-28, § 296-78-230, filed 5/7/74; Rule E-11, effective 6/1/51, filed 3/23/60.] Repealed by 81-18-029 (Order 81-21), filed 8/27/81. Statutory Authority: RCW 49.17.040, 49.17.050 and 49.17.240.

296-78-235 Crawler locomotive and truck cranes. [Order 74-28, § 296-78-235, filed 5/7/74; Rule E-12, effective 6/1/51, filed 3/23/60.] Repealed by 81-18-029 (Order 81-21), filed 8/27/81. Statutory Authority: RCW 49.17.040, 49.17.050 and 49.17.240.

296-78-240 Construction, operation and maintenance—Chain and electric hoists. [Order 74-28, § 296-78-240, filed 5/7/74; Rule E-13, effective 6/1/51, filed 3/23/60.] Repealed by 81-18-029 (Order 81-21), filed 8/27/81. Statutory Authority: RCW 49.17.040, 49.17.050 and 49.17.240.

296-78-245 Monorail hoists. [Order 74-28, § 296-78-245, filed 5/7/74; Rule E-14, effective 6/1/51, filed 3/23/60.] Repealed by 81-18-029 (Order 81-21), filed 8/27/81. Statutory Authority: RCW 49.17.040, 49.17.050 and 49.17.240.

296-78-250 Air hoists. [Order 74-28, § 296-78-250, filed 5/7/74; Rule E-15, effective 6/1/51, filed 3/23/60.] Repealed by 81-18-029 (Order 81-21), filed 8/27/81. Statutory Authority: RCW 49.17.040, 49.17.050 and 49.17.240.

296-78-255 Jib, pillar, and portable floor cranes, crabs, and winches. [Order 74-28, § 296-78-255, filed 5/7/74; Rule E-16, effective 6/1/51, filed 3/23/60.] Repealed by 81-18-029 (Order 81-21), filed 8/27/81. Statutory Authority: RCW 49.17.040, 49.17.050 and 49.17.240.

296-78-260 Standard crane hand signals—Illustration. [Order 74-28, § 296-78-260, filed 5/7/74; Rule E-17, effective 6/1/51, filed 3/23/60.] Repealed by 81-18-029 (Order 81-21), filed 8/27/81. Statutory Authority: RCW 49.17.040, 49.17.050 and 49.17.240.

296-78-265 Vehicles. [Order 77-12, § 296-78-265, filed 7/11/77; Order 74-28, § 296-78-265, filed 5/7/74; Rules E-18 through E-39, effective 6/1/51, filed 3/23/60.] Repealed by 81-18-029 (Order 81-21), filed 8/27/81. Statutory Authority: RCW 49.17.040, 49.17.050 and 49.17.240.

296-78-270 Loading, piling, storage and conveying. [Order 76-7, § 296-78-270, filed 3/1/76; Order 74-28, § 296-78-270, filed 5/7/74; Rules F-1 through F-43, effective 6/1/51, filed 3/23/60.] Repealed by 81-18-029 (Order 81-21), filed 8/27/81. Statutory Authority: RCW 49.17.040, 49.17.050 and 49.17.240.

296-78-275 Log dumps and ponds—Headmills. [Order 76-7, § 296-78-275, filed 3/1/76; Order 74-28, § 296-78-275, filed 5/7/74; Rules G-1 through G-50, effective 6/1/51, filed 3/23/60.] Repealed by 81-18-029 (Order 81-21), filed 8/27/81. Statutory Authority: RCW 49.17.040, 49.17.050 and 49.17.240.

296-78-280 Band saws—Saws. [Order 76-7, § 296-78-280, filed 3/1/76; Order 74-28, § 296-78-280, filed 5/7/74; Rule H-1, effective 6/1/51, filed 3/23/60.] Repealed by 81-18-029 (Order 81-21), filed 8/27/81. Statutory Authority: RCW 49.17.040, 49.17.050 and 49.17.240.

296-78-285 Circular saws. [Order 74-28, § 296-78-285, filed 5/7/74; Rule H-2, effective 6/1/51, filed 3/23/60.] Repealed by 81-18-029 (Order 81-21), filed 8/27/81. Statutory Authority: RCW 49.17.040, 49.17.050 and 49.17.240.

296-78-290 Edgers. [Order 77-12, § 296-78-290, filed 7/11/77; Order 76-7, § 296-78-290, filed 3/1/76; Order 74-28, § 296-78-290, filed 5/7/74; Rules H-3A through H-3J, effective 6/1/51, filed 3/23/60.] Repealed by 81-18-029 (Order 81-21), filed 8/27/81. Statutory Authority: RCW 49.17.040, 49.17.050 and 49.17.240.

296-78-295 Equalizer saws. [Order 74-28, § 296-78-295, filed 5/7/74; Rule H-4, effective 6/1/51, filed 3/23/60.] Repealed by 81-18-029 (Order 81-21), filed 8/27/81. Statutory Authority: RCW 49.17.040, 49.17.050 and 49.17.240.

296-78-300 Gang saws and re-saws. [Order 74-28, § 296-78-300, filed 5/7/74; Rule H-5, effective 6/1/51, filed 3/23/60.] Repealed by 81-18-029 (Order 81-21), filed 8/27/81. Statutory Authority: RCW 49.17.040, 49.17.050 and 49.17.240.

296-78-305 Jump saws. [Order 74-28, § 296-78-305, filed 5/7/74; Rule H-6, effective 6/1/51, filed 3/23/60.] Repealed by 81-18-029 (Order 81-21), filed 8/27/81. Statutory Authority: RCW 49.17.040, 49.17.050 and 49.17.240.

296-78-310 Saws—Shingle saws. [Rule H-7, effective 6/1/51, filed 3/23/60.] Repealed by Order 74-28, filed 5/7/74 and Order 76-7, filed 3/1/76.

296-78-315 Trimmer and slasher saws. [Order 74-28, § 296-78-315, filed 5/7/74; Rule H-8, effective 6/1/51, filed 3/23/60.] Repealed by 81-18-029 (Order 81-21), filed 8/27/81. Statutory Authority: RCW 49.17.040, 49.17.050 and 49.17.240.

296-78-320 Barrel stave saws. [Order 74-28, § 296-78-320, filed 5/5/74; Rule H-9, effective 6/1/51, filed 3/23/60.] Repealed by 81-18-029 (Order 81-21), filed 8/27/81. Statutory Authority: RCW 49.17.040, 49.17.050 and 49.17.240.

296-78-325 Swing saws. [Order 74-28, § 296-78-325, filed 5/7/74; Rule H-10, effective 6/1/51, filed 3/23/60.] Repealed by 81-18-029 (Order 81-21), filed 8/27/81. Statutory Authority: RCW 49.17.040, 49.17.050 and 49.17.240.

296-78-330 Table saws. [Order 74-28, § 296-78-330, filed 5/7/74; Rule H-11, effective 6/1/51, filed 3/23/60.] Repealed by 81-18-029 (Order 81-21), filed 8/27/81. Statutory Authority: RCW 49.17.040, 49.17.050 and 49.17.240.

296-78-335 Circular saws, speeds, repairs. [Order 74-28, § 296-78-335, filed 5/7/74; Rule H-12, effective 6/1/51, filed 3/23/60.] Repealed by 81-18-029 (Order 81-21), filed 8/27/81. Statutory Authority: RCW 49.17.040, 49.17.050 and 49.17.240.

296-78-340 Saw filing and grinding rooms and equipment. [Order 74-28, § 296-78-340, filed 5/7/74; Rule H-13, effective 6/1/51, filed 3/23/60.] Repealed by 81-18-029 (Order 81-21), filed 8/27/81. Statutory Authority: RCW 49.17.040, 49.17.050 and 49.17.240.

296-78-345 Miscellaneous woodworking machines—Planers, stickers, molders, matchers. [Order 74-28, § 296-78-345, filed 5/7/74; Rule I-1, effective 6/1/51, filed 3/23/60.] Repealed by 81-18-029 (Order 81-21), filed 8/27/81. Statutory Authority: RCW 49.17.040, 49.17.050 and 49.17.240.

296-78-350 Planers (stave and heading). [Order 74-28, § 296-78-350, filed 5/7/74; Rule I-2, effective 6/1/51, filed 3/23/60.] Repealed by 81-18-029 (Order 81-21), filed 8/27/81. Statutory Authority: RCW 49.17.040, 49.17.050 and 49.17.240.

296-78-355 Stave croziers. [Order 74-28, § 296-78-355, filed 5/7/74; Rule I-3, effective 6/1/51, filed 3/23/60.] Repealed by 81-18-029 (Order 81-21), filed 8/27/81. Statutory Authority: RCW 49.17.040, 49.17.050 and 49.17.240.

296-78-360 Jointers. [Order 74-28, § 296-78-360, filed 5/7/74; Rule I-4, effective 6/1/51, filed 3/23/60.] Repealed by 81-18-029 (Order 81-21), filed 8/27/81. Statutory Authority: RCW 49.17.040, 49.17.050 and 49.17.240.

296-78-365 Jointers (stave and heading). [Order 74-28, § 296-78-365, filed 5/7/74; Rule I-5, effective 6/1/51, filed 3/23/60.] Repealed by 81-18-029 (Order 81-21), filed 8/27/81. Statutory Authority: RCW 49.17.040, 49.17.050 and 49.17.240.

296-78-370 Miscellaneous woodworking machines—Jointers—(Shingle). [Rule I-6, effective 6/1/51, filed 3/23/60.] Repealed by Order 74-28, filed 5/7/74 and Order 76-7, filed 3/1/76.

296-78-375 Wood shapers. [Order 74-28, § 296-78-375, filed 5/7/74; Rule I-7, effective 6/1/51, filed 3/23/60.] Repealed by 81-18-029 (Order 81-21), filed 8/27/81. Statutory Authority: RCW 49.17.040, 49.17.050 and 49.17.240.

296-78-380 Boring and mortising machines. [Order 74-28, § 296-78-380, filed 5/7/74; Rule I-8, effective 6/1/51, filed 3/23/60.] Repealed by 81-18-029 (Order 81-21), filed 8/27/81. Statutory Authority: RCW 49.17.040, 49.17.050 and 49.17.240.

296-78-385 Tenoning machines. [Order 74-28, § 296-78-385, filed 5/7/74; Rule I-9, effective 6/1/51, filed 3/23/60.] Repealed by 81-18-029 (Order 81-21), filed 8/27/81. Statutory Authority: RCW 49.17.040, 49.17.050 and 49.17.240.

296-78-390 Lathe (pail and barrel). [Order 74-28, § 296-78-390, filed 5/7/74; Rule I-10, effective 6/1/51, filed 3/23/60.] Repealed by 81-18-029 (Order 81-21), filed 8/27/81. Statutory Authority: RCW 49.17.040, 49.17.050 and 49.17.240.

296-78-395 Sanding machines. [Order 74-28, § 296-78-395, filed 5/7/74; Rule I-11, effective 6/1/51, filed 3/23/60.] Repealed by 81-18-029 (Order 81-21), filed 8/27/81. Statutory Authority: RCW 49.17.040, 49.17.050 and 49.17.240.

296-78-400 Glue machines. [Order 74-28, § 296-78-400, filed 5/7/74; Rule I-12, effective 6/1/51, filed 3/23/60.] Repealed by 81-18-029 (Order 81-21), filed 8/27/81. Statutory Authority: RCW 49.17.040, 49.17.050 and 49.17.240.

296-78-405 Lath mills. [Order 74-28, § 296-78-405, filed 5/7/74; Rule J-1, effective 6/1/51, filed 3/23/60.] Repealed by 81-18-029 (Order 81-21), filed 8/27/81. Statutory Authority: RCW 49.17.040, 49.17.050 and 49.17.240.

296-78-410 Veneer and plywood plants—Peeling and barking. [Order 74-28, § 296-78-410, filed 5/7/74; Rule K-1, effective 6/1/51, filed 3/23/60.] Repealed by 81-18-029 (Order 81-21), filed 8/27/81. Statutory Authority: RCW 49.17.040, 49.17.050 and 49.17.240.

296-78-415 Veneer lathe. [Order 74-28, § 296-78-415, filed 5/7/74; Rules K-2 through K-4, effective 6/1/51, filed 3/23/60.] Repealed by 81-18-029 (Order 81-21), filed 8/27/81.

	Statutory Authority: RCW 49.17.040, 49.17.050 and 49.17.240.
296-78-420	Veneer slicer and cutter. [Order 74-28, § 296-78-420, filed 5/7/74; Rule K-5, effective 6/1/51, filed 3/23/60.] Repealed by 81-18-029 (Order 81-21), filed 8/27/81. Statutory Authority: RCW 49.17.040, 49.17.050 and 49.17.240.
296-78-425	Veneer clipper. [Order 74-28, § 296-78-425, filed 5/7/74; Rule K-6, effective 6/1/51, filed 3/23/60.] Repealed by 81-18-029 (Order 81-21), filed 8/27/81. Statutory Authority: RCW 49.17.040, 49.17.050 and 49.17.240.
296-78-430	Veneer wringer (swede). [Order 74-28, § 296-78-430, filed 5/7/74; Rule K-7, effective 6/1/51, filed 3/23/60.] Repealed by 81-18-029 (Order 81-21), filed 8/27/81. Statutory Authority: RCW 49.17.040, 49.17.050 and 49.17.240.
296-78-450	The shake and shingle industry. [Order 76-7, § 296-78-450, filed 3/1/76; Order 74-28, § 296-78-450, filed 5/7/74.] Repealed by 81-18-029 (Order 81-21), filed 8/27/81. Statutory Authority: RCW 49.17.040, 49.17.050 and 49.17.240.
296-78-555	First-aid room. [Statutory Authority: RCW 49.17.040, 49.17.050 and 49.17.240. 81-18-029 (Order 81-21), § 296-78-555, filed 8/27/81.] Repealed by 00-01-038, filed 12/7/99, effective 2/1/00. Statutory Authority: RCW 49.17.010, [49.17].040 and [49.17].050.

WAC 296-78-500 Foreword. (1) General requirements. The chapter 296-78 WAC shall apply to and include safety requirements for all installations where the primary manufacturing of wood building products takes place. The installations may be a permanent fixed establishment or a portable operation. These operations shall include but are not limited to log and lumber handling, sawing, trimming and planing, plywood or veneer manufacturing, canting operations, waste or residual handling, operation of dry kilns, finishing, shipping, storage, yard and yard equipment, and for power tools and affiliated equipment used in connection with such operation. WAC 296-78-450 shall apply to shake and shingle manufacturing. The provisions of WAC 296-78-500 through 296-78-84011 are also applicable in shake and shingle manufacturing except in instances of conflict with the requirements of WAC 296-78-705. (Rev. 1-28-76.)

(2) This standard shall augment the Washington state general safety and health standards, general occupational health standards, electrical workers safety rules, and any other standards which are applicable to all industries governed by chapter 80, Laws of 1973, Washington Industrial Safety and Health Act. In the event of any conflict between any portion of this chapter and any portion of any of the general application standards, the provisions of this chapter 296-78 WAC, shall apply.

(3) In exceptional cases where compliance with specific provisions of this chapter can only be accomplished to the serious detriment and disadvantage of an operation, variance from the requirement may be permitted by the director of the department of labor and industries after receipt of application for variance which meets the requirements of chapter 296-350 WAC.

(4) No safety program will run itself. To be successful, the wholehearted interest of the employees' group (labor unions) and management must not only be behind the program, but the fact must also be readily apparent to all.

[Statutory Authority: RCW 49.17.010, [49.17].040, and [49.17].050. 01-11-038, § 296-78-500, filed 5/9/01, effective 9/1/01. Statutory Authority: RCW 49.17.040, 49.17.050 and 49.17.240. 81-18-029 (Order 81-21), § 296-78-500, filed 8/27/81.]

WAC 296-78-505 Definitions applicable to this chapter. (1) "A-frame" means a structure made of two independent columns fastened together at the top and separated at the bottom for stability.

(2) "Annealing" heating then cooling to soften and render less brittle.

(3) "Binder" a hinged lever assembly used to connect the ends of a wrapper to tighten the wrapper around the load of logs or materials.

(4) "Boom" logs or timbers fastened together end to end and used to contain floating logs. The term includes enclosed logs.

(5) "Brow log" a log placed parallel to a roadway at a landing or dump to protect vehicles while loading or unloading.

(6) "Bunk" a cross support for a load.

(7) "Cant" a log slabbed on one or more sides.

(8) "Carriage" (log carriage) a framework mounted on wheels which runs on tracts or in grooves in a direction parallel to the face of the saw, and which contains apparatus to hold a log securely and advance it toward the saw.

(9) "Carrier" an industrial truck so designed and constructed that it straddles the load to be transported with mechanisms to pick up the load and support it during transportation.

(10) "Chipper" a machine which cuts material into chips.

(11) "Chock," "bunk block," and "cheese block" a wedge that prevents logs or loads from moving.

(12) "Cold deck" a pile of logs stored for future removal.

(13) "Crotch lines" two short lines attached to a hoisting line by a ring or shackle, the lower ends being attached to loading hooks.

(14) "Dog" (carriage dog) a steel tooth or assembly of steel teeth, one or more of which are attached to each carriage knee to hold log firmly in place on carriage.

(15) "Drag saw" a power-driven, reciprocating cross-cut saw mounted on suitable frame and used for bucking logs.

(16) "Head block" that part of a carriage which holds the log and upon which it rests. It generally consists of base, knee, taper set, and mechanism.

(17) "Head rig" a combination of head saw and log carriage used for the initial breakdown of logs into timbers, cants, and boards.

(18) "Hog" a machine for cutting or grinding slabs and other coarse residue from the mill.

(19) "Husk" a head saw framework on a circular mill.

(20) "Industrial truck" a mobile, power-driven vehicle used to carry, push or pull material. It is designed for "in-plant" or "on-site" use rather than highway use.

(21) "Kiln tender" the operator of a kiln.

(22) "Lift truck" an industrial truck used for lateral transportation and equipped with a power-operated lifting device, usually in the form of forks, for piling or unpiling lumber units or packages.

(23) "Live rolls" cylinders of wood or metal mounted on horizontal axes and rotated by power, which are used to convey slabs, lumber, and other wood products.

(24) "Loading boom" any structure projecting from a pivot point and intended to be used for lifting and guiding loads for the purpose of loading or unloading.

(25) "Log" a portion of a tree, usually a minimum of twelve feet in length, capable of being further processed into a variety of wood products.

(26) "Log deck" a platform in the sawmill on which the logs remain until needed for sawing.

(27) "Log haul" a conveyor for transferring logs to mill.

(28) "Lumber dimensions" the nominal size of surfaced lumber, unless otherwise stated.

(29) "Lumber hauling truck" an industrial truck, other than a lift truck or a carrier, used for the transport of lumber.

(30) "Package" a unit of lumber.

(31) "Peavy" a stout wooden handle fitted with a spike and hook and used for rolling logs.

(32) "Peeler block" a portion of a tree usually bucked in two foot intervals plus trim, to be peeled in a lathe or sliced in a slicer into veneer for further processing into plywood.

(33) "Pike pole" a long pole whose end is shod with a sharp pointed spike.

(34) "Pitman rod" connecting rod.

(35) "Resaw" band, circular, or sash gang saws used to break down slabs, cants, or flitches into lumber.

(36) "Running line" any moving rope as distinguished from a stationary rope such as a guyline.

(37) "Safety factor" a calculated reduction factor which may be applied to laboratory test values to obtain safe working stresses for wooden beams and other mechanical members; ratio of breaking load to safe load.

(38) "Saw guide" a device for steadying a circular or bandsaw.

(39) "Setwork" a mechanism on a sawmill carriage which enables an operator to move the log into position for another cut.

(40) "Sorting gaps" the areas on a log pond enclosed by boom sticks into which logs are sorted.

(41) "Spreader wheel" a metal wheel that separates the board from the log in back of circular saws to prevent binding.

(42) "Splitter" a knife-type, nonrotating spreader.

(43) "Sticker" a strip of wood or other material used to separate layers of lumber.

(44) "Stiff boom" the anchored, stationary boom sticks which are tied together and on which boom persons work.

(45) "Swifter" is a tying of boom sticks together to prevent them from spreading while being towed.

(46) "Telltale" a device used to serve as a warning for overhead objects.

(47) "Top saw" the upper of two circular saws on a head rig, both being on the same husk.

(48) "Tramway" a way for trams, usually consisting of parallel tracks laid on wooden beams.

(49) "Trestle" a braced framework of timbers, piles or steelwork for carrying a road or railroad over a depression.

(50) "Wrapper" a chain, strap or wire rope assembly used to contain a load of logs or materials.

[Statutory Authority: RCW 49.17.040, 49.17.050 and 49.17.240. 81-18-029 (Order 81-21), § 296-78-505, filed 8/27/81.]

WAC 296-78-510 Education and first-aid standards. It shall be the duty of every employer to comply with such standards and systems of education for safety as shall be, from time to time, prescribed for such employer by the director of labor and industries through the division of industrial safety and health or by statute.

[Statutory Authority: RCW 49.17.040, 49.17.050 and 49.17.240. 81-18-029 (Order 81-21), § 296-78-510, filed 8/27/81.]

WAC 296-78-515 Management's responsibility. (1) It shall be the responsibility of management to establish, supervise, and enforce, in a manner which is effective in practice:

(a) A safe and healthful working environment.

(b) An accident prevention program as required by these standards.

(c) Training programs to improve the skill and competency of all employees in the field of occupational safety and health. Such training shall include the on-the-job instructions on the safe use of powered materials handling equipment, machine tool operations, use of toxic materials and operation of utility systems prior to assignments to jobs involving such exposures.

(2) The employer shall develop and maintain a chemical hazard communication program as required by WAC 296-800-170, which will provide information to all employees relative to hazardous chemicals or substances to which they are exposed, or may become exposed, in the course of their employment.

(3) Management shall not assign mechanics, millwrights, or other persons to work on equipment by themselves when there is a probability that the person could fall from elevated work locations or equipment or that a person could be pinned down by heavy parts or equipment so that they could not call for or obtain assistance if the need arises.

Note: This subsection does not apply to operators of motor vehicles, watchperson or certain other jobs which, by their nature, are singular employee assignments. However, a definite procedure for checking the welfare of all employees during their working hours shall be instituted and all employees so advised.

(4) After the emergency actions following accidents that cause serious injuries that have immediate symptoms, a preliminary investigation of the cause of the accident shall be conducted. The investigation shall be conducted by a person designated by the employer, the immediate supervisor of the injured employee, witnesses, employee representative if available and any other person with the special expertise required to evaluate the facts relating to the cause of the accident. The findings of the investigation shall be documented by the employer for reference at any following formal investigation.

(5) Reporting of fatality or multiple hospitalization incidents.

(a) Within eight hours after the fatality or probable fatality of any employee from a work-related incident or the inpatient hospitalization of two or more employees as a result of a work-related incident, the employer of any employees so affected shall report the fatality/multiple hospitalization by telephone or in person, to the nearest office of the department or by using the OSHA toll-free central telephone number, 1-800-321-6742.

(i) This requirement applies to each such fatality or hospitalization of two or more employees which occurs within thirty days of the incident.

(ii) Exception: If any employer does not learn of a reportable incident at the time it occurs and the incident would otherwise be reportable under this subsection, the employer shall make a report within eight hours of the time the incident is reported to any agent or employee of the employer.

(iii) Each report required by this subsection shall relate the following information: Establishment name, location of the incident, time of the incident, number of fatalities or hospitalized employees, contact person, phone number, and a brief description of the incident.

(b) Equipment involved in an incident resulting in an immediate or probable fatality or in the in-patient hospitalization of two or more employees, shall not be moved, until a representative of the department investigates the incident and releases such equipment, except where removal is essential to prevent further incident. Where necessary to remove the victim, such equipment may be moved only to the extent of making possible such removal.

(c) Upon arrival of a department investigator, employer shall assign to assist the investigator, the immediate supervisor and all employees who were witnesses to the incident, or whoever the investigator deems necessary to complete the investigation.

(6) A system for maintaining records of occupational injuries and illnesses as prescribed by chapter 296-27 WAC.

Note: Recordable cases include:
(a) Every occupational death.
(b) Every industrial illness.
(c) Every occupational injury that involves one of the following:
(i) Unconsciousness.
(ii) Inability to perform all phases of regular job.
(iii) Inability to work full time on regular job.
(iv) Temporary assignment to another job.
(v) Medical treatment beyond first aid.

All employers with eleven or more employees shall record occupational injury and illness information on forms OSHA 101 - supplementary record occupational injuries and illnesses and OSHA 200 - log and summary. Forms other than OSHA 101 may be substituted for the supplementary record of occupational injuries and illnesses if they contain the same items.

[Statutory Authority: RCW 49.17.010, [49.17].040, and [49.17].050. 01-11-038, § 296-78-515, filed 5/9/01, effective 9/1/01. Statutory Authority: Chapter 49.17 RCW. 94-20-057 (Order 94-16), § 296-78-515, filed 9/30/94, effective 11/20/94; 91-24-017 (Order 91-07), § 296-78-515, filed 11/22/91, effective 12/24/91; 89-11-035 (Order 89-03), § 296-78-515, filed 5/15/89, effective 6/30/89. Statutory Authority: RCW 49.17.040, 49.17.050 and 49.17.240. 81-18-029 (Order 81-21), § 296-78-515, filed 8/27/81.]

WAC 296-78-520 Employee's responsibility. (1) Employees shall coordinate and cooperate with all other employees in an attempt to eliminate accidents.

(2) Employees shall study and observe all safe practices governing their work.

(3) Employees should offer safety suggestions, wherein such suggestions may contribute to a safer work environment.

(4) Employees shall apply the principles of accident prevention in their daily work and shall use proper safety devices and protective equipment as required by their employment or employer.

(5) Employees shall properly care for all personal protective equipment.

(6) Employees shall make a prompt report to their immediate supervisor, of each industrial injury or occupational illness, regardless of the degree of severity.

(7) Employees shall not wear torn or loose clothing while working around machinery.

[Statutory Authority: RCW 49.17.040, 49.17.050 and 49.17.240. 81-18-029 (Order 81-21), § 296-78-520, filed 8/27/81.]

WAC 296-78-525 Accident-prevention programs. Each employer shall develop a formal accident-prevention program, tailored to the needs of the particular plant or operation and to the type of hazards involved. The department may be contacted for assistance in developing appropriate programs.

(1) The following are the minimal program elements for all employers:

(a) A safety orientation program describing the employer's safety program and including:

(i) How and when to report injuries, including instruction as to the location of first-aid facilities.

(ii) How to report unsafe conditions and practices.

(iii) The use and care of required personal protective equipment.

(iv) The proper actions to take in event of emergencies including the routes of exiting from areas during emergencies.

(v) Identification of the hazardous gases, chemicals or materials involved along with the instructions on the safe use and emergency action following accidental exposure.

(vi) A description of the employers total safety program.

(vii) An on-the-job review of the practices necessary to perform the initial job assignments in a safe manner.

(b) A designated safety and health committee consisting of management and employee representatives with the employee representatives being elected or appointed by fellow employees.

(2) Each accident-prevention program shall be outlined in written format.

[Statutory Authority: Chapter 49.17 RCW. 94-20-057 (Order 94-16), § 296-78-525, filed 9/30/94, effective 11/20/94. Statutory Authority: RCW 49.17.040, 49.17.050 and 49.17.240. 81-18-029 (Order 81-21), § 296-78-525, filed 8/27/81.]

WAC 296-78-530 Safety and health committee plan. (1) All employers of eleven or more employees, shall have a designated safety committee composed of employer and employee elected members.

(a) The terms of employee-elected members shall be a maximum of one year. Should a vacancy occur on the committee, a new member shall be elected prior to the next scheduled meeting.

(b) The number of employer-selected members shall not exceed the number of employee-elected members.

(2) The safety committee shall have an elected chairperson.

(3) The safety committee shall be responsible for determining the frequency of committee meetings.

Note: If the committee vote on the frequency of safety meetings is stalemated, the division's regional safety educational representative may be consulted for recommendations.

(a) The committee shall be responsible for determining the date, hour and location of the meetings.

(b) The length of each meeting shall not exceed one hour except by majority vote of the committee.

(4) Minutes of each committee meeting shall be prepared and filed for a period of at least one year and shall be made available for review by noncompliance personnel of the division of industrial safety and health.

(5) Safety and health committee meetings shall address the following:

(a) A review of the safety and health inspection reports to assist in correction of identified unsafe conditions or practices.

(b) An evaluation of the accident investigations conducted since the last meeting to determine if the cause of the unsafe acts or unsafe conditions involved was properly identified and corrected.

(c) An evaluation of the accident or illness prevention program with the discussion of recommendation for improvement where indicated.

(d) The attendance shall be documented.

(e) The subject(s) discussed shall be documented.

(6) All employers of ten or less employees and employers of eleven or more employees where the employees are segregated on different shifts or in widely dispersed locations in crews of ten or less employees, may elect to have foreman-crew meetings in lieu of a safety and health committee plan provided:

(a) Foreman-crew safety meetings be held at least once a month, however, if conditions require, weekly or semi-monthly meetings shall be held to discuss safety problems as they arise.

(b) All items under subsection (5) of this section shall be covered.

[Statutory Authority: RCW 49.17.040, 49.17.050 and 49.17.240. 81-18-029 (Order 81-21), § 296-78-530, filed 8/27/81.]

WAC 296-78-535 Safety bulletin board. There shall be installed and maintained in every fixed establishment, a safety bulletin board sufficient in size to display and post safety bulletins, newsletters, posters, accident statistics and other safety educational material. It is recommended that safety bulletin boards be painted green and white.

[Statutory Authority: RCW 49.17.040, 49.17.050 and 49.17.240. 81-18-029 (Order 81-21), § 296-78-535, filed 8/27/81.]

WAC 296-78-540 First-aid training and certification. The employer must ensure that first-aid trained personnel are available to help employees who are injured or who become acutely ill on the job. The employer must meet this requirement by maintaining first-aid trained staff on the job site. The employer must ensure that:

(1) Each person in charge of employees has first-aid training; or another person with first-aid training is present or available to the employees. Such training must be successfully completed every two years;

(2) Documentation of first-aid training is kept;

(3) Emergency telephone numbers are adequately posted.

[Statutory Authority: RCW 49.17.010, 49.17.040, 49.17.050, and 49.17.060. 04-07-160, § 296-78-540, filed 3/23/04, effective 5/1/04. Statutory Authority: RCW 49.17.010, [49.17].040, and [49.17].050. 01-11-038, § 296-78-540, filed 5/9/01, effective 9/1/01; 00-01-038, § 296-78-540, filed 12/7/99, effective 2/1/00. Statutory Authority: RCW 49.17.040, 49.17.050 and 49.17.240. 81-18-029 (Order 81-21), § 296-78-540, filed 8/27/81.]

WAC 296-78-545 First-aid supplies. The first-aid kits and supplies requirements of WAC 296-800-150 apply within the scope of chapter 296-78 WAC.

[Statutory Authority: RCW 49.17.010, [49.17].040, and [49.17].050. 01-11-038, § 296-78-545, filed 5/9/01, effective 9/1/01; 00-01-038, § 296-78-545, filed 12/7/99, effective 2/1/00. Statutory Authority: RCW 49.17.040, 49.17.050 and 49.17.240. 81-18-029 (Order 81-21), § 296-78-545, filed 8/27/81.]

WAC 296-78-550 First-aid station. Employers with fifty or more employees per shift at one location must establish a first-aid station in accordance with the requirements in chapter 296-24 WAC, Part A-1.

[Statutory Authority: RCW 49.17.010, [49.17].040 and [49.17].050. 00-01-038, § 296-78-550, filed 12/7/99, effective 2/1/00. Statutory Authority: RCW 49.17.040, 49.17.050 and 49.17.240. 81-18-029 (Order 81-21), § 296-78-550, filed 8/27/81.]

WAC 296-78-560 Safe place standards. (1) Each employer shall furnish to each of his employees a place of employment free from recognized hazards that are causing or likely to cause serious injury or death to his employees.

(2) Every employer shall furnish and use safety devices and safeguards, and shall adopt and use practices, means, methods, operations, and processes which are reasonably adequate to render such employment and place of employment safe. Every employer shall do every other thing reasonably necessary to protect the life and safety of employees.

(3) No employer shall require any employee to go or be in any employment or place of employment which is not safe.

(4) No employer shall fail or neglect:

(a) To provide and use safety devices and safeguards.

(b) To adopt and use methods and processes reasonably adequate to render the employment and place of employment safe.

(c) To do every other thing reasonably necessary to protect the life and safety of employees.

(5) No employer, owner, or lessee of any real property shall construct or cause to be constructed any place of employment that is not safe.

(6) No person shall do any of the following:

(a) Remove, displace, damage, destroy or carry off any safety device, safeguard, notice, or warning, furnished for use in any employment or place of employment.

(b) Interfere in any way with the use thereof by any other person.

(c) Interfere with the use of any method or process adopted for the protection of any employee, including himself, in such employment, or place of employment.

(d) Fail or neglect to do every other thing reasonably necessary to protect the life and safety of employees.

(e) Intoxicating beverages and narcotics shall not be permitted or used in or around work sites. Workers under the

influence of alcohol or narcotics shall not be permitted on the work site. This rule does not apply to persons taking prescription drugs and or narcotics as directed by a physician providing such use shall not endanger the worker or others.

[Statutory Authority: RCW 49.17.040, 49.17.050 and 49.17.240. 81-18-029 (Order 81-21), § 296-78-560, filed 8/27/81.]

WAC 296-78-565 Log dumps and ponds—Headmills.

[Statutory Authority: RCW 49.17.040, 49.17.050 and 49.17.240. 81-18-029 (Order 81-21), § 296-78-565, filed 8/27/81.]

WAC 296-78-56501 Log dumps and ponds. (1) Log dumps, booms, ponds or storage areas, if used at night, shall be illuminated in accordance with the requirements of WAC 296-800-210, safety and health core rules.

(2) A log dump shall be constructed at each log pond or decking ground. Log trucks shall not be unloaded by use of peavies or by hand.

(a) The roadbed shall be of hard packed gravel, heavy planking or equivalent material and shall be maintained at all times. Roadbeds at log dumps shall be of width and evenness to insure safe operation of equipment.

(b) A mechanical unloading device shall be provided and used for unloading logs. Log unloading areas shall be arranged and maintained to provide a safe working area.

(c) Signs prohibiting unauthorized foot or vehicle traffic in log unloading and storage areas shall be posted.

(d) At no time shall one person be permitted to work alone on a log dump, a booming or rafting grounds, or a log pond.

(3) Water log dumps. Ungrounded electrically powered hoists using handheld remote control in grounded locations, such as log dumps or mill log lifts, shall be actuated by circuits operating at less than 50 volts to ground.

(4)(a) A brow log, skid timbers or the equivalent shall be installed on all log dumps.

(b) Where logs are unloaded onto skids, sufficient space shall be provided between the top of the skids and the ground to accommodate the body of a person.

(c) All truck dumps shall be built with not more than six inches variation of level from side to side.

(5)(a) All truck log dumps shall be equipped with a positive safeguard to prevent logs from leaving the load on the side opposite the brow log. Jill pokes shall not be used on truck log dumps.

(b) Unloading lines shall be attached and tightened or other positive safeguard in place before binder chains are released at any log dump.

(c) Stakes and chocks which trip shall be constructed in such manner that the tripping mechanism that releases the stake or chocks is activated at the opposite side of the load being tripped.

(d) Binders shall be released only from the side on which the unloader operates, except when released by remote control devices or except when person making release is protected by racks or stanchions or other equivalent means.

(e) Loads on which a binder is fouled by the unloading machine shall have an extra binder or metal band of equal strength placed around the load, or the load shall be otherwise secured so that the fouled binder can be safely removed.

(f) Unloading lines, crotch lines, or equally effective means shall be arranged and used in a manner to minimize the possibility of any log swinging or rolling back.

(6)(a) In unloading operations, the operator of unloading machine shall have an unobstructed view of the vehicle and the logs being unloaded.

(b) Unloading lines shall be arranged so that it is not necessary for the employees to attach them from the pond or dump site of the load except when entire loads are lifted from the log-transporting vehicle.

(7) All log dumps shall be kept reasonably free of bark and other debris.

(8) Employees shall remain in the clear until all moving equipment has come to a complete stop.

(9) Artificial log ponds subject to unhealthy stagnation shall be drained, cleansed, and water changed at least once every six months.

(10) All employees whose regular work requires walking on logs shall wear spiked or calked shoes, except when working in snow.

(11) Employees whose duties require them to work from boats, floating logs, boom sticks, or walkways along or on water must be provided with and must wear appropriate buoyant devices while performing such duties.

(a) Employees are not considered exposed to the danger of drowning:

(i) When working behind standard height and strength guardrails;

(ii) When working inside operating cabs or stations which eliminate the possibility of accidentally falling into the water;

(iii) When wearing approved safety belts with lifeline attached so as to preclude the possibility of falling into the water.

(b) Prior to and after each use, personal floating devices shall be inspected for defects which would reduce their designed effectiveness. Defective personal flotation devices shall not be used.

(c) To meet the approved criteria required by this subsection (11), a personal flotation device shall be approved by the United States Coast Guard as a Type I PFD, Type II PFD, Type III PFD, or Type V PFD, or their equivalent, pursuant to 46 CFR 160 (Coast Guard lifesaving equipment specifications) and 33 CFR 175.23 (Coast Guard table of devices equivalent to personal flotation devices). Ski belt or inflatable type personal flotation devices are specifically prohibited.

(12)(a) Wooden pike poles shall be of continuous, straight grained No. 1 material. Defective poles, blunt or dull pikes shall not be used.

(b) Aluminum or other metal poles shall not be used where hazard of coming in contact with live electric wires exists.

(13)(a) Walkways and floats shall be provided and security anchored to provide safe passage for workers.

(b) Permanent cable swifters shall be so arranged that it will not be necessary to roll boom sticks in order to attach or detach them.

(c) Inspection of cable or dogging lines shall be made as necessary to determine when repair or removal from service is necessary.

(14)(a) Decks of floats or other walkways shall be kept above the waterline at all times and shall be capable of supporting four times the load to be imposed.

(b) Floating donkeys or other power-driven machinery used on booms shall be placed on a raft or float with enough buoyancy to keep the deck above water.

(15)(a) All regular boom sticks and foot logs shall be reasonably straight, have all protruding knots and bark removed, and shall be capable of supporting above the waterline at either end, any necessary weight of workers and equipment.

(b) Stiff booms shall be two float logs wide secured by boom chains or other connecting devices, and of a width adequate for the working needs. Walking surfaces shall be free of loose material and maintained in good repair.

(c) Boom sticks shall be fastened together with crossties or couplings.

[Statutory Authority: RCW 49.17.010, [49.17].040, and [49.17].050. 02-03-124, § 296-78-56501, filed 1/23/02, effective 3/1/02; 01-11-038, § 296-78-56501, filed 5/9/01, effective 9/1/01. Statutory Authority: Chapter 49.17 RCW. 89-11-035 (Order 89-03), § 296-78-56501, filed 5/15/89, effective 6/30/89. Statutory Authority: RCW 49.17.040, 49.17.050 and 49.17.240. 81-18-029 (Order 81-21), § 296-78-56501, filed 8/27/81.]

WAC 296-78-56503 Log hauls. (1) Every log haul used as a walkway shall have at least one walkway with standard railing to enable workers to stand clear of the logs in the chute. Cleats shall be installed to provide safe footing on sloping walkways.

(2) Workers shall not stand under or dangerously near to logs that are being hoisted vertically to the log deck.

(3)(a) Log haul gears and bull chain drive mechanism shall be adequately guarded for the protection of employees.

(b) Log haul bull chains or cable shall be designed, installed, and maintained to provide a 4 to 1 safety factor for the intended load.

(c) Troughs for the return strand of log haul chains shall be provided over passageways.

(d) Overhead protection shall be provided for employees working below logs being moved to the log deck.

(4) Log haul controls shall be arranged to operate from a position where the operator will at all times be in the clear of logs, machinery lines and rigging. Such controls shall operate mechanism only when moved toward the log slip or deck.

(5) Where possible an automatic stop shall be installed on all log hauls. A positive stop shall be installed on all log hauls to prevent logs from traveling too far ahead in the mill.

(6)(a) Slip persons shall handle pike poles in such manner as to be in the clear in case of a slip back.

(b) All sorting gaps shall have a stiff boom on each side.

(c) The banks of the log pond in the vicinity of the log haul shall be reinforced to prevent caving in.

[Statutory Authority: RCW 49.17.040, 49.17.050 and 49.17.240. 81-18-029 (Order 81-21), § 296-78-56503, filed 8/27/81.]

WAC 296-78-56505 Boats and mechanical devices on waters. (1) The applicable provisions of the Standard for Fire Protection for Motorcraft, NFPA No. 302-1994, shall be complied with. Prior to starting the boat motor, any spilled fuel shall be removed and vapors shall be exhausted from any area in which they may accumulate.

(2) The bilge area shall be kept clean and oil, grease, fuel, or highly combustible materials shall not be allowed to accumulate.

(3) Adequate ventilation equipment shall be provided and used for the bilge area to prevent the accumulation of toxic or explosive gases or vapors.

(4) Adequate ventilation equipment shall be provided and used for the cabin area on enclosed cabin-type boats to prevent an accumulation of harmful gases or vapors.

(5) Deck and cabin lighting shall be provided and used where necessary to provide safe levels of illumination aboard boats. Boats operated during the period from sunset to sunrise, or in conditions of restricted visibility, shall display navigation lights as required by the United States Coast Guard. Searchlights or floodlights shall be provided to facilitate safe navigation and to illuminate working or boarding areas adjacent to the craft.

(6) Decks of pond boats shall be covered with nonslip material. On craft used by workers wearing calked shoes, all areas where the operator or workers must stand or walk shall be made of or be covered with wood or other suitable matting or nonslip material and such covering shall be maintained in good condition.

(7) Each boat shall be provided with a fire extinguisher and life ring with at least fifty feet of one-fourth inch line attached.

Note: For additional requirements relating to portable fire extinguishers see WAC 296-800-300.

(8)(a) Along docks, walkways, or other fixed installations on or adjacent to open water more than five feet deep, approved life rings with at least ninety feet of one-fourth inch line attached, shall be provided. The life rings shall be spaced at intervals not to exceed two hundred feet and shall be kept in easily visible and readily accessible locations.

(b) When employees are assigned work at other casual locations where exposure to drowning exists, at least one approved life ring with at least ninety feet of line attached, shall be provided in the immediate vicinity of the work assigned.

(c) When work is assigned over water where the vertical drop from the accidental fall would exceed fifty feet, special arrangements shall be made with and approved by the department of labor and industries prior to such assignment.

(d) Lines attached to life rings on fixed locations shall be at least ninety feet in length, at least one-fourth inch in diameter, and have a minimum breaking strength of five hundred pounds. Similar lines attached to life rings on boats shall be at least fifty feet in length.

(e) Life rings must be United States Coast Guard approved thirty-inch size.

(f) Life rings and attached lines shall be provided and maintained to retain their buoyancy and strength.

(g) Log broncs, boomscooters, and boomboats shall not be loaded with personnel or equipment so as to adversely affect their stability or seaworthiness.

(h) Boats shall not be operated at an excessive speed or handled recklessly.

(i) Boat fuel shall be transported and stored in approved containers. Refer to WAC 296-24-58501(19) for definition of approved.

[Statutory Authority: RCW 49.17.010, 49.17.040, 49.17.050, and 49.17.060. 03-06-076, § 296-78-56505, filed 3/4/03, effective 8/1/03. Statutory Authority: RCW 49.17.010, [49.17].040, and [49.17].050. 02-03-124, § 296-78-56505, filed 1/23/02, effective 3/1/02; 01-17-033, § 296-78-56505, filed 8/8/01, effective 9/1/01. Statutory Authority: Chapter 49.17 RCW. 96-17-056, § 296-78-56505, filed 8/20/96, effective 10/15/96; 88-23-054 (Order 88-25), § 296-78-56505, filed 11/14/88. Statutory Authority: RCW 49.17.040, 49.17.050 and 49.17.240. 81-18-029 (Order 81-21), § 296-78-56505, filed 8/27/81.]

WAC 296-78-56507 Log decks. (1) Dry deck storage.

(a) Dry deck storage areas shall be kept orderly and shall be maintained in a condition which is conducive to safe operation of mobile equipment.

(b) Logs shall be stored in stabilized piles, and roadways and traffic lanes shall be maintained at a width adequate for safe travel of log handling equipment.

(c) Logs shall be arranged to minimize the chance of accidentally rolling from the deck.

(2)(a) Employees shall not spool cable on winch or drums with their hands.

(b) Log wells shall be provided with safeguard to prevent logs from rolling back into well off log deck.

(3) Jump skids on log decks shall be installed in grooves in a manner that they cannot work out onto the carriage way.

(4)(a) Log decks shall be provided with effective means to prevent logs from accidentally rolling down the deck onto the carriage or its runway.

(b) Swing saws. Swing saws on log decks shall be equipped with a barricade and stops for protection of employees who may be on the opposite side of the log haul chute.

(c) Drag saws. Where reciprocating log cutoff saws (drag saws) are provided, they shall not project into walkway or aisle.

(d) Circular cutoff saws. Circular log bucking or cutoff saws shall be so located and guarded as to allow safe entrance to and exit from the building.

(e) Entrance doorway. Where the cutoff saw partially blocks the entrance from the log haul runway the entrance shall be guarded.

(5) A barricade or other positive stop shall be erected between the sawyer's stand and the log deck to protect the sawyer from rolling logs. Such barricade or stop shall be of sufficient strength to stop any log.

(6) Chains from overhead canting gear or other equipment shall not be allowed to hang over the log deck in such manner as to endanger workers.

(7) Canting gear control levers shall be so arranged that they move away from the carriage to operate.

(8) Moving parts or equipment on or about log decks shall be guarded.

(9) Peavies, canthooks and other hand tools shall be kept in good repair at all times.

(10) Workers shall not go below logs on decks that are likely to roll or be rolled. Means of access shall be provided to the head rig which does not subject employees to the hazard of moving logs or equipment.

[Statutory Authority: RCW 49.17.040, 49.17.050 and 49.17.240. 81-18-029 (Order 81-21), § 296-78-56507, filed 8/27/81.]

WAC 296-78-56509 Mechanical barkers. (1) Rotary barkers. Rotary barking devices shall be so guarded as to protect employees from flying chips, bark, or other extraneous material.

(2) Elevating ramp. If an elevating ramp or gate is used, it shall be provided with a safety chain, hook, or other means of suspension while employees are underneath.

(3) Area around barkers. The hazardous area around ring barkers and their conveyors shall be fenced off or posted as a prohibited area for unauthorized persons.

(4) Enclosing hydraulic barkers. Hydraulic barkers shall be enclosed with strong baffles at the inlet and outlet. The operator shall be protected by adequate safety glass or equivalent.

(5) Holddown rolls. Holddown rolls shall be installed at the infeed and outfeed sections of mechanical ring barkers to control the movement of logs.

(6) If such holddown rolls have a tendency to throw logs or chunks, horseshoe or equivalent type guards shall be installed to contain the logs or chunks.

[Statutory Authority: RCW 49.17.040, 49.17.050 and 49.17.240. 81-18-029 (Order 81-21), § 296-78-56509, filed 8/27/81.]

WAC 296-78-56511 Head rigs and feed works. (1) A clear walkway shall be provided along the upper side of the log deck and around the head rig unless an overhead walkway is provided.

(2) The sawyer shall be primarily responsible for the safety of the carriage crew and off-bearers. He shall exercise due care in the operation of the carriage and log turning devices.

(3) Feedworks and log turning control levers shall be so arranged that they may be securely locked when not in use and shall be guarded against accidental contact.

(4)(a) A positive means shall be provided to prevent unintended movement of the carriage. This shall involve a control locking device, a carriage tie-down, or both.

(b) An emergency control or equally effective means shall be provided so that the sawyer may stop the head rig section of the mill without leaving the operator station.

(5) An effective method of disengaging the head rig saws from the power unit shall be installed on all head rigs where the power unit is not directly controlled by the sawyer. The saws shall be disengaged from the source of power while repairs or changes are made.

(6) A shield of lexan, makrolon, merlon, plestar, or equivalent transparent material, shall be installed between the sawyer's stand and the head saws in all circular mills. In band mills and chipper type installations, a wire screen of not less than twelve gauge wire, one-half inch mesh, mounted in a frame in compliance with chapter 296-806 WAC, Machine safety, is an acceptable substitute for the type shield required in circular mills.

(7) Safety glasses, safety shields or other suitable eye protection shall be provided for and use by head rig off-bearers.

[Statutory Authority: RCW 49.17.010, 49.17.040, 49.17.050, and 49.17.060. 04-14-028, § 296-78-56511, filed 6/29/04, effective 1/1/05. Statutory Authority: RCW 49.17.040, 49.17.050 and 49.17.240. 81-18-029 (Order 81-21), § 296-78-56511, filed 8/27/81.]

WAC 296-78-56513 Log carriages. (1) Carriages upon which employees are required to work shall be solidly decked over.

(2) Dogs. Dogging devices shall be adequate to secure logs, cants, or boards, during sawing operations.

(3) The feed control lever of friction or belt driven carriage feed works shall be arranged to operate away from the saws or carriage track.

(4) A quick action valve, controlled from the sawyer's stand, shall be located in the steam line to any steam operated feed works. The valve shall be tested daily.

(5) Valves in steam feeds shall be closed and locked in a neutral position before the sawyer leaves his station. Leaking steam valves or piping shall not be used on carriage drives.

(6)(a) Where employees ride the headrig carriage, clearance of the rear edge of the carriage shall be either not more than two inches or shall be not less than thirty inches from the side wall of the building. The side wall shall be boarded over smoothly to height of not less than six feet six inches from the setter's platform and for at least the length of the carriage travel. Where the clearance is thirty inches or more the floor between the back side of the setter's platform and the wall shall be raised to the level of the platform. The clearance between the floor edge and the platform shall not be more than two inches.

(b) Barriers and warning signs. A barrier shall be provided to prevent employees from entering the space necessary for travel of the carriage, with headblocks fully receded, for the full length and extreme ends of carriage runways. Warning signs shall be posted at possible entry points to this area.

(7) Safe access to the head rig shall be provided.

(8) No roof truss or roof timber or other obstruction shall be located within six feet six inches of the upper surface of the setter's platform on any carriage.

(9) Doors which lead onto a passageway at the end or side of the carriage runway shall be provided with a handrail opposite such doorway. Handrail shall not be less than eighteen inches from the carriage run. A warning sign shall be posted on the entrance side of such doorways.

(10) A stop or bumper capable of stopping the loaded carriage at operating speed shall be installed at each end of the carriage run.

(11) Rail sweeps shall be installed in front of the front wheels in the direction of travel. Such sweeps shall extend to within one-fourth inch of the rail.

(12) Where power operated log turners are used, carriage knees shall be provided with goosenecks or other means of protecting the carriage crew from climbing logs.

(13) Employees shall use a stick or wire brush to clear head blocks of debris.

(14) All weakened or broken carriage boards which will not support the load to be imposed with a safety factor of 4, shall be immediately replaced.

(15) Carriage control. A positive means shall be provided to prevent unintended movement of the carriage. This may involve a control locking device, a carriage tie-down, or both.

[Statutory Authority: Chapter 49.17 RCW. 96-17-056, § 296-78-56513, filed 8/20/96, effective 10/15/96. Statutory Authority: RCW 49.17.040, 49.17.050 and 49.17.240. 81-18-029 (Order 81-21), § 296-78-56513, filed 8/27/81.]

WAC 296-78-570 Band saws—Saws. (1) Band head rigs shall be given a thorough daily inspection and any deficiency reported and corrected.

(2) Any band saw found to have developed a crack greater than one-tenth the width of the saw shall be removed from service until the width of the saw is reduced to eliminate the crack, the cracked section is removed, or the development of the crack is arrested by welding.

(3) Band saws shall not be continued in use of the head rig for which they have been designed after they have been reduced forty percent in width.

(4) Leather gloves, or equivalent hand protection, shall be worn by employees while changing band saws.

(5) All head band saw wheels shall have a minimum rim thickness of five-eighths inch, except for a distance of not to exceed one inch from the front edge of the wheel.

(6) Provisions shall be made for alerting and warning employees before starting band head saws, and measures shall be taken to insure that all persons are in the clear.

(7) No band saw shall be run at a peripheral speed in excess of that recommended by the manufacturer. The manufacturer's recommended maximum speed shall be stamped in plainly legible figures on some portion of the assembly.

(8) A band wheel that has developed a crack in the rim shall be immediately removed from service. If a crack has developed in a spoke the wheel shall be removed from service until repaired.

(9) All band wheels shall be completely encased or guarded on both sides. The exposed part of the saw blade on the uptravel between the two wheels shall be encased, and no portion of the blade exposed, except such part of the cutting edge as is essential for sawing the material at hand.

(10) All band wheel guards shall be constructed of not less than ten U.S. gauge metal, or not less than two inch wood material or equivalent, attached to the frames. Ventilating ports shall not exceed 2 x 4 inches in size. Openings necessary for lubrication or repair of the saw shall have doors or gates of equivalent strength to the remainder of the guard, and such doors or gates shall be securely closed during operation.

(11) Every band mill shall be equipped with a saw catcher, rest or guard of substantial construction.

(12) All band saws other than head mills shall be enclosed or guarded except the working side of the blade between the guide and the table. The guard for the portion of the saw between the sliding guide and the upper saw wheel guard shall be adjusted with the guide.

(13) Each gang ripper of band or straight saw type shall have the cutting edges of the saw guarded by a hood or screen secured to the framework of the machine.

[Statutory Authority: Chapter 49.17 RCW. 96-17-056, § 296-78-570, filed 8/20/96, effective 10/15/96. Statutory Authority: RCW 49.17.040, 49.17.050 and 49.17.240. 81-18-029 (Order 81-21), § 296-78-570, filed 8/27/81.]

WAC 296-78-575 Circular saws. (1) Single circular head saws. Circular head saws shall not be operated at speeds

in excess of those specified by the manufacturer. Maximum speed shall be etched on the saw.

(2) On all circular saw mills the horizontal distance from the side of the saw to the nearest post of the husk or frame shall be at least one inch greater than the clear vertical distance between the collars of the top and bottom saws.

(3) Circular head saws shall be equipped with safety guides that can be readily adjusted without use of wrench or other hand tools. Brackets or edging supports shall be installed between the saw and the side of the husk.

(4) The upper saw of a double circular mill shall be provided with a hood or guard. A screen or other suitable device shall be placed so as to protect the sawyer from flying particles.

(5) All circular sawmills where live rolls are not used behind the head saw shall be equipped with an effective spreader or splitter. In any mill where the head saw is used for edging lumber, the splitter shall be solid and stationary and shall extend above the head blocks.

(6) Drag saws or circular cut-off saws shall be so arranged that they will not project into any passageway. When existing installations do not leave clear passage, saws shall be fenced off in order to make it impossible for anyone to walk into them. Means to securely hold material being sawed shall be provided wherever such material creates a hazard.

(7) All employees shall be in the clear before starting operation of drag or swing cut-off saws.

(8) Twin circular head saws. Twin circular head saw rigs such as scrag saws, shall meet the specifications for single circular head saws in subsection (1) of this section, where applicable.

[Statutory Authority: RCW 49.17.040, 49.17.050 and 49.17.240. 81-18-029 (Order 81-21), § 296-78-575, filed 8/27/81.]

WAC 296-78-580 Edgers. (1) Edgers shall be guarded by a metal housing of ten gauge sheet metal, ten gauge by one-half inch mesh wire, screen, or by a baffle of not less than two inch wood material.

(2) Openings in end frames shall be enclosed with sheet metal, wire screen or wood and may be hinged or arranged to permit oiling and removal of saws.

(3) The top of the edger shall be guarded to prevent contact by employees or debris being thrown and all chains and gears fully enclosed as required by WAC 296-78-710 of this chapter.

(4) Vertical arbor edgers installed ahead of the main saw shall be so located and guarded that an employee cannot contact any part of the edger saws from his normal operating position.

(5) Edgers shall not be located in the main roll case behind the head saw.

(6) All edgers shall be equipped with pressure feed rolls. The controls shall be installed and located so that from the normal work station the operator can quickly stop the infeed drive without releasing the hold down tension of the pressure rolls.

(7) All edgers shall be provided with a method of preventing or guarding against kickbacks. Finger units or dogs installed at the edger, or hinged steel plates suspended across the feed table may be used for this purpose. A kickback barricade, in line with the edger, if fenced off may be used.

(8) Pressure and feed rolls on edgers shall be guarded against accidental contact by means of roll covers, bars or strips. The pressure rolls shall not be lifted while stock is being run, or while any person is in line with the feed side of the saws.

(9) Edger men shall not raise feed rolls and reach between saws while edger is in operation.

(10) Edger men shall not put hands on cants being run through the edger.

(11) Live rolls and rotating powered tailing devices in back of edger shall operate at a speed not less than the speed of the edger feed rolls.

(12) Tables in back of edgers shall be kept clear of cants, edgings and unnecessary debris.

[Statutory Authority: Chapter 49.17 RCW. 96-17-056, § 296-78-580, filed 8/20/96, effective 10/15/96. Statutory Authority: RCW 49.17.040, 49.17.050 and 49.17.240. 81-18-029 (Order 81-21), § 296-78-580, filed 8/27/81.]

WAC 296-78-585 Equalizer saws. (1) Equalizer saws for bolts, staves, heading, etc., shall have the saws encased, except that portion immediately adjacent to the feeding device.

(2) Feeding devices on all such equipment shall be provided with guards to prevent contact with the feeding device by employees.

[Statutory Authority: RCW 49.17.040, 49.17.050 and 49.17.240. 81-18-029 (Order 81-21), § 296-78-585, filed 8/27/81.]

WAC 296-78-590 Gang saws and re-saws. (1) Gang saws and re-saws shall be fully guarded or housed in accordance with conditions. Cranks, pitman rods, and other moving parts shall be guarded.

(2) Feed rolls shall be enclosed by a cover over the top, front, and open ends except where guarded by location. Drive mechanism to feed rolls shall be enclosed.

(3) Feed rolls shall be enclosed and if the operator stands within thirty inches of the feed rolls, they shall be so guarded as to prevent operator coming into contact with them.

(4) Circular re-saws or rip saws, except power feed rip saws with a roller or wheel back of the saw, shall be provided with splitters or spreaders.

(5) A hood of metal or wood of sufficient strength to give protection against splinters or flying teeth shall be provided over all circular rip saws.

(6) That portion of the saw extending below the table shall be so guarded as to prevent contact.

(7) Circular rip saws shall be equipped with a standard anti-kickback device.

(8) Carriage cradles of whole-log sash gang saws, Swedish gangs shall be of height to prevent logs from kicking out while being loaded.

(9) Band re-saws. Band re-saws shall meet the specifications for band head saws as required in WAC 296-78-570(7).

(10) Circular gang re-saws.

(a) Banks of circular gang re-saws shall be guarded by a hood to contain teeth or debris which can be thrown by the saws.

(b) Circular gang re-saws shall be provided with safety fingers or other anti-kickback devices.

(c) Circular gang re-saws shall not be operated at speeds exceeding those recommended by the manufacturer.

(d) Feed belts and drive pulleys shall be guarded in accordance with chapter 296-806 WAC, Machine safety.

(e) Each circular gang re-saw, except self-feed saws with a live roll or wheel at back of saw, shall be provided with spreaders.

[Statutory Authority: RCW 49.17.010, 49.17.040, 49.17.050, and 49.17.060. 04-14-028, § 296-78-590, filed 6/29/04, effective 1/1/05. Statutory Authority: RCW 49.17.040, 49.17.050 and 49.17.240. 81-18-029 (Order 81-21), § 296-78-590, filed 8/27/81.]

WAC 296-78-595 Jump saws. (1) Jump saws shall have guards below the top of the table or roll case. A guard shall be placed over the roll casing to prevent persons from walking into or over the saw.

(2) Jump saws, underhung swing saws, or bed trimmers shall be so arranged that the saws are fully enclosed when not in actual use.

(3) A positive stop shall be installed to prevent the saw from passing the front edge of the roll case or table. The throat in the table or roll case shall be only wide enough to permit unobstructed operation of the saw.

(4) Guards constructed of not less than two inch wood material or of heavy wire mesh mounted in a steel frame shall be placed in front of jump saw trimmers. Stops shall be installed to prevent timber from being thrown off the roll case.

(5) Foot treadle operated saws shall be provided with safeguards to prevent accidental contact.

[Statutory Authority: RCW 49.17.040, 49.17.050 and 49.17.240. 81-18-029 (Order 81-21), § 296-78-595, filed 8/27/81.]

WAC 296-78-600 Trimmer and slasher saws. (1) Trimmer of [and] slasher saws shall be guarded in front by a flat or round steel framework with a rigid metal screen or light iron bars attached thereto, or by wood baffles of not less than two inch wood material securely bolted to the frame.

Maximum speed. Trimmer saws shall not be run at peripheral speeds in excess of those recommended by the manufacturer.

(2) Front guards for a series of saws shall be set as close to the top of the feed table as is practical when considering the type of machine in use and the material being cut. The end saws of a series shall be guarded or fenced off.

(3) The rear of a series of saws shall have a stationary or swinging guard of not less than two inch wood material or equivalent the full width of the saws and as much wider as is necessary to protect persons at the rear of the trimmer.

(4) Safety stops. Automatic trimmer saws shall be provided with safety stops or hangers to prevent saws from dropping on table.

(5) Feed chains shall be stopped while employees are on the feed table.

(6) Spotters for trimmers or slashers shall be provided with goggles or other eye protection when conditions so warrant.

[Statutory Authority: RCW 49.17.040, 49.17.050 and 49.17.240. 81-18-029 (Order 81-21), § 296-78-600, filed 8/27/81.]

WAC 296-78-605 Swing saws. (1) Manually operated swing cut-off saws of the following types shall be set up, guarded and operated in accordance with chapter 296-806 WAC, Machine safety:

• Saws into which materials to be cut are fed or positioned and/or held in position by hand pressure during the cutting stroke; and/or

• Saws on which the cutting stroke is propelled by hand pressure; and/or

• Saws on which the operator is within arm's reach of the blade when the operator is standing at the operator's control station and the blade is fully extended to the limit of operating travel.

(2) Operators of hand operated swing saws shall not stand directly in front of saw while making a cut.

(3) Swing cut-off saws which are fed by powered live rolls, conveyor chains and/or belts and which are operated from a remote operator's station (defined as being beyond arm's reach of the blade when the blade is fully extended to the limit of operating travel) shall be set up, guarded and operated in accordance with the following:

(a) Overhead swing cut-off saws shall be guarded by a hood which shall cover the upper half of the cutting edge at least to the depth of the teeth.

(b) The driving belts on overhead swing cut-off saws, where exposed to contact, shall be provided with guards as required by WAC 296-78-71505.

(c) Saws shall be completely enclosed when in idle position.

(d) Power operated swing saws shall have controls so arranged that the operators will not stand directly in front of saw when making cut.

(e) All swing saws shall be equipped with a counter balance which shall be permanently fastened to the frame of the saw and so arranged or adjusted that it will return the saw beyond the rear edge of the table or roll case without a rebounding motion. Wire rope, chain or nonmetallic rope running to a weight over a sheave shall not be used for attaching counter balance.

(f) No swing cut-off or trim saw shall be located directly in line with stock coming from an edger.

(g) Swing limit stops shall be provided and so adjusted that at no time shall the forward swing of the saw extend the cutting edge of the saw beyond a line perpendicular with the edge of the saw table, roll case, guard or barrier.

(h) Saws that are fed into the cut by means of air, steam, hydraulic cylinders, or other power device or arrangement shall be designed so they can be locked or rendered inoperative.

(i) Foot treadle operated saws shall be provided with safeguards to prevent accidental contact.

(j) Swing saws on log decks shall be equipped with a positive stop for the protection of persons who may be on the opposite side of the log haul chute.

(k) Tables or roll casings for swing saws shall be provided with stops or lineup rail to prevent material being pushed off on opposite side.

(4) Operators of hand operated swing saws shall not stand directly in front of saw while making cut.

[Statutory Authority: RCW 49.17.010, 49.17.040, 49.17.050, and 49.17.060. 04-14-028, § 296-78-605, filed 6/29/04, effective 1/1/05. Statu-

tory Authority: Chapter 49.17 RCW. 96-17-056, § 296-78-605, filed 8/20/96, effective 10/15/96. Statutory Authority: RCW 49.17.040, 49.17.050 and 49.17.240. 81-18-029 (Order 81-21), § 296-78-605, filed 8/27/81.]

WAC 296-78-610 Circular saws, speeds, repairs. (1) Circular saws shall not be operated at speeds in excess of that specified by the manufacturer. Speeds shall be etched on all new saws. When saws are repaired, remanufactured or retensioned in any way to change their operating speeds, such change of speed shall be etched on the saw. These etched speeds shall not be exceeded.

(2) Circular saws shall be inspected for cracks each time that the teeth are filed or set.

(3) A circular saw shall be discontinued from use until properly repaired when found to have developed a crack equal to the length indicated in the following table:

Length of Crack	Diameter
1/2 -inch	Up to 12"
1 -inch	Over 12" to 24"
1-1/2 -inch	Over 24" to 36"
2 -inch	Over 36" to 48"
2-1/2 -inch	Over 48" to 60"
3 -inch	Over 60"

(4) Welding or slotting of cracked saws shall be done by a sawsmith under a procedure recommended by the saw manufacturer. Holes shall not be drilled in saws as a means of arresting cracks. After saws are repaired they shall be retensioned. Unless a sawsmith is employed, saws shall be returned to the manufacturer for welding or tensioning.

[Statutory Authority: RCW 49.17.040, 49.17.050 and 49.17.240. 81-18-029 (Order 81-21), § 296-78-610, filed 8/27/81.]

WAC 296-78-615 Saw filing and grinding rooms and equipment. (1) Approaches to filing rooms shall be kept free from material and equipment at all times.

(2) Enclosed grinding and filing rooms shall be ventilated as specified in the general occupational health standard, WAC 296-62-110 through 296-62-11019.

(3) Each filing and grinding room shall be provided with two exits so arranged as to permit easy escape in case of fire.

(4) Floor shall be cleaned regularly and shall be kept free from oil, grease and other materials that might cause employees to slip or fall.

(5) Flooring around machines shall be kept in good repair at all times.

(6) Saw grinding machine belts shall be provided with guards where these belts pass through the frame of the machine.

(7) All grinding wheels on such machines shall be provided with a metal retaining hood which shall also cover the arbor ends if they are exposed to contact.

(8) Filing room employees shall be provided with goggles, face shields, or other necessary protective equipment and are required to wear the same.

(9) Guarding and mounting of abrasive wheels shall be in accordance with chapter 296-806 WAC, Machine safety.

[Statutory Authority: RCW 49.17.010, 49.17.040, 49.17.050, and 49.17.060. 04-14-028, § 296-78-615, filed 6/29/04, effective 1/1/05. Statutory Authority: RCW 49.17.040, 49.17.050 and 49.17.240. 81-18-029 (Order 81-21), § 296-78-615, filed 8/27/81.]

WAC 296-78-620 Miscellaneous woodworking machines—Planers, stickers, molders, matchers. (1) Each planing, molding, sticking and matching machine shall have all cutting heads, and saws if used, covered by a solid metal guard. If such guard is constructed of sheet metal, the material used shall be not less than one-sixteenth inch in thickness, and if cast iron is used, it shall be not less than three-sixteenths inch in thickness.

(2) Planers, stickers, molding, sticking and matching machines shall be provided with exhaust fans, hoods and dust conveyors to remove the harmful dusts, etc., from the vicinity of the operator. Such hoods may be arranged to serve as guards for cutting heads.

(3) Planers and other machinery or equipment shall not be oiled while in motion, unless provided with guards or other devices to permit oiling without any possibility of contact with moving parts of machinery.

(4) Feed rolls shall be guarded by means of roll covers, bars or strips, attached to the roll frame in such manner as to remain in adjustment for any thickness of lumber.

(5)(a) Levers or controls shall be so arranged or guarded as to prevent accidental operation of machines.

(b) Foot treadle operated machines shall have a treadle guard fastened over the treadle.

(c) Locks, blocks, or other device shall be provided for positive immobilization of machine controls while repairs or adjustments are being made.

(6) Side head hoods shall be of sufficient height to safeguard the head set screw.

(7) Side heads shall not be adjusted while machine is in operation, except when extension adjusting devices are provided.

(8) Side belt and pulley guards shall be kept in place at all times the machine is in motion.

(9) All universal joints shall be enclosed.

[Statutory Authority: Chapter 49.17 RCW. 96-17-056, § 296-78-620, filed 8/20/96, effective 10/15/96. Statutory Authority: RCW 49.17.040, 49.17.050 and 49.17.240. 81-18-029 (Order 81-21), § 296-78-620, filed 8/27/81.]

WAC 296-78-625 Planers (stave and headings). (1) Each planer (stave and heading) shall have all cutting heads, and saws if used, covered by a solid metal guard.

(2) Stave and heading planers shall be provided with exhaust fans, hoods and dust conveyors to remove the harmful dusts, etc., from the vicinity of the operator. Such hoods may be arranged to serve as guards for cutting heads.

(3) Sectional feed rolls should be provided. Where solid feed rolls are used, a sectional finger device (or other means equally effective) shall be provided to prevent kickbacks.

[Statutory Authority: RCW 49.17.040, 49.17.050 and 49.17.240. 81-18-029 (Order 81-21), § 296-78-625, filed 8/27/81.]

WAC 296-78-630 Stave croziers. (1) Stave croziers shall have the heads guarded completely by the exhaust hood or other device, except that portion which actually inbeds itself in the stock.

(2) Each stave crozier shall have all feed chains and sprockets completely enclosed.

[Statutory Authority: RCW 49.17.040, 49.17.050 and 49.17.240. 81-18-029 (Order 81-21), § 296-78-630, filed 8/27/81.]

WAC 296-78-635 Jointers. (1) Each hand feed jointer or buzz planer with horizontal head shall be provided with an automatic guard over the cutting head both in front of and in back of the guide.

(2) Each jointer or buzz planer with horizontal head shall be equipped with a cylindrical cutting head, the throat of which shall not exceed three-eighths inch in depth or one-half inch in width. The knife projection shall not exceed one-eighth inch beyond the cylindrical body of the head.

(3) The opening in the table shall be kept as small as possible. The clearance between the edge of the rear table and the cutter head shall be not more than one-eighth inch. The table throat opening shall be not more than two and one-half inches when tables are set or aligned with each other for zero cut.

(4) Each jointer or buzz planer with vertical head shall be guarded by an exhaust hood or other approved device which shall completely enclose the revolving head except for a slot sufficiently wide to permit the application of material. The guard shall effectively protect the operator's hand from coming in contact with the revolving knives. The guard shall automatically adjust itself to cover the unused portion of the head and shall remain in contact with the material at all times.

(5) Push sticks shall be provided and used for feeding stock through hand operated jointers or buzz planers.

[Statutory Authority: Chapter 49.17 RCW. 96-17-056, § 296-78-635, filed 8/20/96, effective 10/15/96. Statutory Authority: RCW 49.17.040, 49.17.050 and 49.17.240. 81-18-029 (Order 81-21), § 296-78-635, filed 8/27/81.]

WAC 296-78-640 Jointers (stave and heading). (1) Stave and heading jointers and matchers shall have the heads guarded completely by the exhaust hood or other device, except that portion where the stock is applied.

(2) Foot power stave jointing machines shall have the knife effectively guarded to prevent the operator's fingers from coming in contact with it.

[Statutory Authority: RCW 49.17.040, 49.17.050 and 49.17.240. 81-18-029 (Order 81-21), § 296-78-640, filed 8/27/81.]

WAC 296-78-645 Wood shapers. (1) The cutting head of each wood shaper, hand feed panel raiser, or other similar machine not automatically fed, shall be guarded with a cage or pulley guard or other device so designed as to keep the operator's hands away from the cutting edge. In no case shall a warning device of leather or other material attached to the spindle be acceptable. Cylindrical heads shall be used wherever the nature of the work permits. The diameter of circular shaper guards shall be not less than the greatest diameter of the cutter.

(2) All double spindle shapers shall be provided with a spindle starting and stopping device for each spindle or provision shall be made that only one spindle operate at any one time.

[Statutory Authority: RCW 49.17.040, 49.17.050 and 49.17.240. 81-18-029 (Order 81-21), § 296-78-645, filed 8/27/81.]

WAC 296-78-650 Boring and mortising machines. (1) Boring and mortising machines shall be provided with safety bit chucks without projecting set screws. Automatic machines shall be provided with point of operation guards. When necessary to prevent material from revolving with the bit, clamps or stops shall be provided and used to hold material firmly against the guides.

(2) The requirements of WAC 296-806-48048, Make sure boring and mortising machines meet these requirements, shall be applicable to boring and mortising machines.

[Statutory Authority: RCW 49.17.010, 49.17.040, 49.17.050, and 49.17.060. 04-14-028, § 296-78-650, filed 6/29/04, effective 1/1/05. Statutory Authority: Chapter 49.17 RCW. 96-17-056, § 296-78-650, filed 8/20/96, effective 10/15/96. Statutory Authority: RCW 49.17.040, 49.17.050 and 49.17.240. 81-18-029 (Order 81-21), § 296-78-650, filed 8/27/81.]

WAC 296-78-655 Tenoning machines. (1) Each tenoning machine shall have all cutting heads, saws if used, and all exposed moving parts guarded. In the case of cutting heads and saws, the guard shall be of solid metal.

(2) If sheet metal is used, it shall be not less than ten U.S. gauge in thickness. If cast metal is used it shall be not less than three-sixteenths inch thick, or if aluminum is used, it shall be not less than five-eighths inch thick. The hood of the exhaust system may form part or all of the guard. When so used, the hood shall be constructed of metal of a thickness not less than that specified herein.

(3) Feed chains and sprockets of all double end tenoning machines shall be completely enclosed, except that portion of chain used for conveying stock. At rear ends of frames over which the feed conveyors run, sprockets and chains shall be guarded at the sides by plates projecting beyond the periphery of sprockets and ends of lugs.

(4) The rear end of the frame over which the feed conveyors run shall be so extended that the material as it leaves the machine will be guided to a point within easy reach of the person removing stock at the rear of the tenoner.

(5) Single end tenoners, hand fed, shall have a piece of sheet metal placed so that the operator's hands cannot slip off the lever handle into the tool in passing. Such guard shall be fastened to the lever.

[Statutory Authority: RCW 49.17.040, 49.17.050 and 49.17.240. 81-18-029 (Order 81-21), § 296-78-655, filed 8/27/81.]

WAC 296-78-660 Lathe (pail and barrel). (1) Each profile, swing-head and back-knife lathe shall have all cutting heads covered by a solid metal guard.

(2) If sheet metal is used, it shall be not less than ten U.S. gauge in thickness. If cast metal is used, it shall be not less than three-sixteenths inch thick, or if aluminum is used, it shall be not less than five-eighths inch thick. The hood of the exhaust system may form part or all of the guard. When so used, the hood shall be constructed of metal of a thickness not less than that specified above.

(3) Pail and barrel lathes shall be guarded in accordance with the specifications for profile and back-knife lathes insofar as they are applicable.

(4) The requirements of WAC 296-806-450, Lathes, shall be applicable to pail and barrel lathes.

[Statutory Authority: RCW 49.17.010, 49.17.040, 49.17.050, and 49.17.060. 04-14-028, § 296-78-660, filed 6/29/04, effective 1/1/05. Statutory Authority: Chapter 49.17 RCW. 96-17-056, § 296-78-660, filed 8/20/96, effective 10/15/96. Statutory Authority: RCW 49.17.040, 49.17.050 and 49.17.240. 81-18-029 (Order 81-21), § 296-78-660, filed 8/27/81.]

WAC 296-78-665 Sanding machines. (1) Each belt sanding machine shall have both pulleys enclosed in such a manner as to guard the points where the belt runs onto the pulleys. The edges of the unused run of belt shall be enclosed or otherwise guarded from contact by employees.

(2) Each drum sanding machine shall be provided with a guard so arranged as to completely enclose the revolving drum except such portion required for the application of the material to be finished. Guards with hinges to facilitate the insertion of sandpaper may be installed. The exhaust hood may form part or all of this guard. When so used, the hood shall conform to the specifications as given under exhaust systems in WAC 296-78-710.

(3) All standard stationary sanding machines shall be provided with exhaust systems in conformity with the section of this code dealing with exhaust systems.

(4) All portable sanding machines shall be provided with means of removing excessive dust, or employees using equipment shall be provided with such necessary respiratory protective equipment as will conform to the requirements of the general occupational health standards, chapter 296-62 WAC, Part E.

(5) The requirements of WAC 296-806-475 Sanding machines, shall be applicable to sanding machines.

[Statutory Authority: RCW 49.17.010, 49.17.040, 49.17.050, and 49.17.060. 04-14-028, § 296-78-665, filed 6/29/04, effective 1/1/05. Statutory Authority: RCW 49.17.010, [49.17].040 and [49.17].050. 99-10-071, § 296-78-665, filed 5/4/99, effective 9/1/99. Statutory Authority: Chapter 49.17 RCW. 96-17-056, § 296-78-665, filed 8/20/96, effective 10/15/96. Statutory Authority: RCW 49.17.040, 49.17.050 and 49.17.240. 81-18-029 (Order 81-21), § 296-78-665, filed 8/27/81.]

WAC 296-78-670 Glue machines. (1) Personal protective equipment as required by the safety and health core rules, WAC 296-800-160, and the general occupational health standard, WAC 296-62-11021, and proper washing facilities with noncaustic soap and sterilizers, shall be provided for all employees handling glue. Rubber gloves and other personal equipment must be sterilized when transferred from one person to another.

(2) Glue spreaders shall be enclosed on the in-running side, leaving only sufficient space to insert the stock.

(3) All glue spreaders shall be equipped with a panic bar or equivalent type device that can be reached from either the infeed or outfeed side of the spreader to shut off the power in an emergency situation. Such device shall be installed on existing glue spreaders no later than April 1, 1982, and be standard equipment on any glue spreader purchased after January 1, 1982.

(4) All glue mixing and handling rooms where located above work areas shall have water tight floors.

(5) All glue rooms shall be provided with ventilation in accordance with WAC 296-62-110 through 296-62-11013, of the general occupational health standard.

[Statutory Authority: RCW 49.17.010, [49.17].040, and [49.17].050. 01-11-038, § 296-78-670, filed 5/9/01, effective 9/1/01. Statutory Authority: Chapter 49.17 RCW. 94-20-057 (Order 94-16), § 296-78-670, filed 9/30/94, effective 11/20/94. Statutory Authority: RCW 49.17.040, 49.17.050 and 49.17.240. 81-18-029 (Order 81-21), § 296-78-670, filed 8/27/81.]

WAC 296-78-675 Lath mills. (1) Lath mills shall be so arranged that stock pickers shall be protected from slabs and blocks from slasher and trimmers.

(2) Bolters and lath machines shall be provided with a wall or shield of not less than two inch wood material or equivalent, constructed in front of the machines, to protect stock pickers and passing employees from kickbacks.

(3) Lath bolters and lath mills shall have all feed rolls, belts, gears and moving parts provided with approved guards. Feed chains shall be guarded to as low a point as the maximum height of the stock will permit.

(4)(a) Lath bolters and lath mill saws shall be provided with a sheet metal guard not less than one-eighth inch thick, or a cast iron guard not less than three-sixteenths inch thick, or equivalent. These hoods may be hinged so that they can be turned back to permit changing of the saws.

(b) A metal plate baffle, finger device or other device, shall be installed to prevent kickbacks.

(5)(a) The feed rolls on bolters or lath mills shall not be raised while any employee is in line with the saws.

(b) The stock shall be pushed through the saws with another piece of stock or push stick.

(6)(a) The lath trimmer shall be provided with guards on the ends, the top and the rear so designed as to contain debris and prevent employee contact with the saw. The belt drive shall be provided with guards as required by WAC 296-78-710.

(b) The entire top half of all trimmer saws shall be provided with guards. The guards shall be so adjusted as to prevent employees from accidentally contacting saws.

[Statutory Authority: RCW 49.17.040, 49.17.050 and 49.17.240. 81-18-029 (Order 81-21), § 296-78-675, filed 8/27/81.]

WAC 296-78-680 Veneer and plywood plants—Peeling and barking. (1) Where peeling or barking pits are located directly under the log cranes, logs shall not be moved over workers.

(2) Single spiked hooks without a bell shall not be used for handling logs. Hooks shall be equipped with hand holds and shall be maintained in condition to safely perform the job application.

(3) Mechanical barking devices shall be so guarded as to protect employees from flying chips, bark or other matter.

(4) Logs shall not be removed from barker until barking head has ceased to revolve, unless barker is so designed and arranged that barking head will not create or constitute a hazard to employees.

[Statutory Authority: RCW 49.17.040, 49.17.050 and 49.17.240. 81-18-029 (Order 81-21), § 296-78-680, filed 8/27/81.]

WAC 296-78-685 Veneer lathe. (1) The elevating ramp (gate) shall be provided with a safety chain and hook or other positive means of suspension while employees are working underneath same.

(2) The area under the tipple from lathe to stock trays shall be provided with railings or other suitable means of preventing employees from entering this area, if access is not prevented by the construction of the machine and employees can enter this area.

(3) Catwalks shall be provided along stock trays so that employees will not have to climb on the sides of trays to straighten stock.

(4) Any section of stock trays shall be locked out or shall have an operator stationed at starting controls while stock is being removed or adjusted.

(5) Guards which will cover the cutting edge of veneer lathe and clipper blades shall be provided and used while such blades are being transported about premises.

[Statutory Authority: RCW 49.17.040, 49.17.050 and 49.17.240. 81-18-029 (Order 81-21), § 296-78-685, filed 8/27/81.]

WAC 296-78-690 Veneer slicer and cutter. (1) Each veneer slicer and each rotary veneer cutter shall have all revolving and other moving knives provided with guards.

(2) The requirements of chapter 296-806 WAC, Machine safety, shall be applicable to veneer slicers and cutters.

[Statutory Authority: RCW 49.17.010, 49.17.040, 49.17.050, and 49.17.060. 04-14-028, § 296-78-690, filed 6/29/04, effective 1/1/05. Statutory Authority: Chapter 49.17 RCW. 96-17-056, § 296-78-690, filed 8/20/96, effective 10/15/96. Statutory Authority: RCW 49.17.040, 49.17.050 and 49.17.240. 81-18-029 (Order 81-21), § 296-78-690, filed 8/27/81.]

WAC 296-78-695 Veneer clipper. (1) Each veneer clipper shall have either automatic feed or shall be provided with a guard which will make it impossible to place any portion of the hand under the knife while feeding stock. Where practicable, such guard shall be of the vertical finger type.

(2) The rear of each manually operated clipper shall be guarded either by a screen or vertical finger guard which shall make it impossible for any portion of the hand to be placed under the knife while removing clipped stock.

[Statutory Authority: RCW 49.17.040, 49.17.050 and 49.17.240. 81-18-029 (Order 81-21), § 296-78-695, filed 8/27/81.]

WAC 296-78-700 Veneer wringer (swede). The entry side of each veneer wringer other than glue spreader shall be enclosed, leaving only sufficient space to insert stock. A guard shall be provided to prevent the veneer from overriding the top roll and kicking back.

[Statutory Authority: RCW 49.17.040, 49.17.050 and 49.17.240. 81-18-029 (Order 81-21), § 296-78-700, filed 8/27/81.]

WAC 296-78-705 The shake and shingle industry. The following terms and standards shall apply only in the manufacturing of shakes and shingles and these requirements shall take precedence over other sawmill and woodworking standards.

[Statutory Authority: RCW 49.17.040, 49.17.050 and 49.17.240. 81-18-029 (Order 81-21), § 296-78-705, filed 8/27/81.]

WAC 296-78-70501 Definitions—Terms, general. (1) "Block(s)" - those sections of a log cut in various lengths.

(2) "Block(s)" and "bolt(s)" may be considered to be synonymous.

(3) "Clipper saw" - a circular saw used to trim manufactured shingles.

(4) "Groover" - a cylinder-type knife (knives) similar to a planer knife (knives), used to cut grooves into the face surface of shakes or shingles.

(5) "Hip" and "ridge saw" - a circular saw used to cut various angles on the side edge of shakes or shingles.

(6) "Johnson bar" - a shaft used to control the feed of the carriage.

(7) "Knee bolter circular saw" - a stationary circular saw used to trim and debark blocks (the blocks are manually maneuvered onto a carriage and fed into a saw).

(8) "Log haul" - a power conveyor used to move logs to mill.

(9) "Packers" - employees who pack the manufactured shakes or shingles into bundles.

(10) "Panagraph power splitter" - a hydraulically operated wedge, manually positioned into place, used to split blocks.

(11) "Power saw splitter" - a stationary circular saw used to split (saw) blocks, (the blocks are manually maneuvered onto a carriage and fed into the saw).

(12) "Set works" - a component of the shingle machine, located on the machine frame, used to control the thickness of each shingle being manufactured.

(13) "Shake machine" - a band saw used to cut shake blanks into manufactured shakes.

(14) "Shake splitter" - a stationary hydraulically operated wedge, manually controlled, used to split shake blocks into shake blanks or boards.

(15) "Shim saw" - a circular saw used to re-cut manufactured shingles into narrow widths.

(16) "Shingle machine" - a machine used to manufacture shingles; composed of a feed, set works, and carriage system, all functioning in relation to a circular saw.

(17) "Shingle saw" - a circular saw used to cut shingles from blocks.

(18) "Spault" - the first and last section(s) of a block as it is cut into shingles.

(19) "Spault catcher" - a device located on the shingle machine next to the solid feed rolls, used to hold the last section of each block being cut (called a spault), in place.

(20) "Track or swing cutoff saw" - a circular saw used to cut blocks from a log.

[Statutory Authority: RCW 49.17.040, 49.17.050 and 49.17.240. 81-18-029 (Order 81-21), § 296-78-70501, filed 8/27/81.]

WAC 296-78-70503 Shake and shingle machinery—General. (1) Track or swing cutoff circular saw.

(a) Manually operated track or swing circular cutoff saws of the following types shall be set up, guarded and operated in accordance with chapter 296-806 WAC, Machine safety:

• Saws into which materials to be cut are fed or positioned and/or held in position by hand pressure during the cutting stroke; and

• Saws on which the cutting stroke is propelled by manual (hand) pressure; and

• Saws on which the operator is within arm's reach of the blade when the blade is fully extended to the limit of operating travel and the operator is standing at the operator's normal control station/location.

(b) Large track or swing circular cutoff saws into which materials to be cut are fed by powered live rolls, conveyor belts and/or chains and which are operated from a remote operator's control station, defined as beyond arm's reach

when the blade is fully extended to the limit of operating travel, shall be set up, guarded and operated in accordance with the following:

(i) A power operated track or swing cutoff circular saw shall have controls so arranged that operators are not positioned directly in front of the saw while making a cut.

(ii) All track or swing cutoff circular saws shall be completely encased or guarded when the saw is in the retract position, except for that portion of the guard that must be left open for the operation of the saw.

(iii) Track or swing cutoff circular saw guards shall be constructed of sheet metal not less than one-eighth inch thick, or a wood guard of not less than nominal two inch thick wood material, or equivalent.

Hinged or removable doors or gates will be permitted where necessary to permit adjusting and oiling.

(iv) The driving belt(s) on the track or swing cutoff circular saw shall be guarded in accordance with chapter 296-806 WAC, Machine safety.

(v) A safety catch shall be provided to prevent the track cutoff saw from leaving the track.

(2) Overhead deck splitter - panagraph.

(a) Panagraph splitters shall have a shroud incorporated on the upper pressure plate to eliminate the possibility of the splitter moving from the operating area. This shroud shall be constructed of solid design with a minimum width of three inches and a minimum thickness of three-eighths inch.

(b) Mechanically operated overhead splitters shall have handles moving opposite the stroke of the piston.

(c) When the leading edge of the panagraph splitter is completely extended, the maximum clearance from the deck to the splitting edge shall be two inches.

(3) Power splitter saw. Power splitters shall have spreaders behind the saw to prevent materials from squeezing the saw or being thrown back on the operator. The top of the saw shall be completely covered.

(4) Knee bolter circular saw.

(a) A safety catch shall be provided to prevent the bolter carriage from leaving the track.

(b) Bolter saws shall be provided with a canopy guard of sheet metal not less than one-eighth inch thick, or cast iron guard not less than three-sixteenths inch thick or a wood guard of not less than nominal four inch thick wood material or equivalent.

The bolter canopy guard shall completely enclose the rear portion of the saw. It shall be so arranged and adjusted as to cover the front of the saw; not to exceed twenty inches from the top of the carriage to the bottom of the guard on sixteen inch and eighteen inch block and twenty-six inches on twenty-four inch blocks, of the material being cut.

(c) Bolter saws shall be provided with wipers of belting or other suitable material. These wipers shall be installed on both sides of the saw in such a manner as to deflect knots, chips, slivers, etc., that are carried by the saw.

(d) A positive device shall be provided and used to manually lock and hold the feed table in the neutral position when not in use.

(e) That portion of all bolter saws which is below and behind the saw table shall be guarded by the exhaust hood or other device. Hinged or removable doors or gates will be permitted where necessary to permit adjusting and oiling.

[Statutory Authority: RCW 49.17.010, 49.17.040, 49.17.050, and 49.17.060. 04-14-028, § 296-78-70503, filed 6/29/04, effective 1/1/05. Statutory Authority: Chapter 49.17 RCW. 96-17-056, § 296-78-70503, filed 8/20/96, effective 10/15/96. Statutory Authority: RCW 49.17.040, 49.17.050 and 49.17.240. 81-18-029 (Order 81-21), § 296-78-70503, filed 8/27/81.]

WAC 296-78-70505 Shake machinery. (1) Shake splitters.

(a) A positive deenergizing device shall be provided within ready reach of each shake splitter operator.

(b) Each shake splitter shall be provided with an adjustable stroke limiter to eliminate the splitting blade from striking the table.

(c) All splitters shall have a maximum clearance of four inches, from the splitting edge to the table surface, when the splitter is in the extended position.

(d) All splitter tables shall have a friction surface to reduce kick out of the material being split.

(e) Shake splitters shall not be operated at a speed that would cause chunks to be thrown in such a manner as to create a hazard.

(f) The use of foot pedal (treadle) mechanisms shall be provided with protection to prevent unintended operation from falling or moving objects or by accidental stepping onto the pedal.

(i) The pedal shall have a nonslip surface.

(ii) The pedal return spring shall be of the compression type, operating on a rod or guided within a hole or tube, or designed to prevent interleaving of spring coils in event of breakage.

(iii) If pedal counterweights are provided, the path of the travel of the weight shall be enclosed.

(2) Shake saw guards.

(a) Every shake band saw shall be equipped with a saw guard on both sides of the blade down to the top side of the guide.

(b) The outside saw guard shall extend a minimum of three and one-half inches below the bottom edge of the saw guide.

(c) The maximum opening between the saw guide and table rolls shall be fifteen inches.

(3) Shake saw band wheel guards.

(a) The band wheels on all shake band saws shall be completely encased or guarded on both sides. The guards shall be constructed of not less than No. 14 U.S. gauge metal or material equal in strength.

(b) The metal doors, on such guards, shall have a wood liner of a minimum thickness of one-half inch.

(4) Shake saw band wheel speeds and maintenance.

(a) No band wheel shall be run at a peripheral speed in excess of that recommended by the manufacturer.

(b) Each band wheel shall be carefully inspected at least once a month by management.

Any band wheel in which a crack is found in the rim or in a spoke shall be immediately discontinued from service until properly repaired.

(c) Each band saw frame shall be provided with a tension indicator.

[Statutory Authority: RCW 49.17.040, 49.17.050 and 49.17.240. 81-18-029 (Order 81-21), § 296-78-70505, filed 8/27/81.]

WAC 296-78-70507 Upright shingle machine. (1) Upright shingle saw guard.

(a) Every shingle machine carriage shall be equipped with a hand guard which:

(i) Projects at least one inch beyond the cutting edge of the saw.

(ii) Shall be located not more than one-half inch from the side of the saw blade.

(b) Shingle saw guards shall have a rim guard so designed and installed as to prevent chips and knots from flying from the saws. Such guards shall cover the edge of the saw to at least the depth of the teeth, except such part of the cutting edge as is essential for sawing the material.

(c) Saw arbors and couplings shall be guarded to prevent contact.

(d) Every part of a clipper saw blade, except that part which is exposed to trim shingles, shall be enclosed by a guard, so designed and installed to prevent contact with the clipper saw. An additional guard shall be installed not more than four inches above the clipper board and not more than one-half inch from the vertical plane of the saw.

(e) The underside of clipper saw boards shall be equipped with a finger guard to effectively protect the operator's fingers. The guard shall be a minimum of five inches long and one and one-quarter inches deep.

(2) Upright carriage guards.

(a) Automatic revolving cam set works and rocker arms, on machine frame, shall be guarded where exposed to contact.

(b) The spault catchers shall be not less than three-sixteenths inch thick and kept sharp at all times. Missing teeth shall be replaced.

(3) Carriage feed works.

(a) The pinion gear, bull wheel and Johnson bar, operating the saw carriage, shall be guarded where exposed to contact.

(b) Each shingle machine clutch treadle shall be arranged so that it is necessary to manually operate the treadle to start the machine. Devices which start the machine when the jaw treadle is released shall not be installed or used. The carriage shall have a brake to hold it in a neutral position.

(c) Carriage speed shall not exceed thirty-four strokes per minute.

[Statutory Authority: RCW 49.17.040, 49.17.050 and 49.17.240. 81-18-029 (Order 81-21), § 296-78-70507, filed 8/27/81.]

WAC 296-78-70509 Related shake and shingle sawing machinery. (1) Flat or taper saw. A wood or metal guard or its equivalent shall be secured to the sliding table at the side nearest the sawyer to protect him from contact with the cutting edge of the saw when a block is not in the cut.

(2) Hip and ridge saws. The hip and ridge saws shall be guarded with a hood-like device. This guard shall cover that portion of the saw not needed to cut the material, located above the cutting table.

(a) The remaining portion of the saw, located below the table, shall be guarded to prevent contact by employees.

(b) The hip and ridge guarding standard is applicable to both shake and shingle hip and ridge saws.

(3) Shim stock saws. The top ends and sides of the shim stock saws shall be guarded. All shim stock saw power transmission mechanism shall be guarded.

(4) Shake or shingle groover. The top ends and sides of the groover, to include the press rolls, shall be guarded to contain material or debris which can be thrown and to prevent contact. All groover machine power transmission mechanism shall be guarded in compliance with WAC 296-78-710.

(5) Circular saws, speeds and repairs.

(a) Maximum allowable speeds.

(i) No circular saw shall be run at a speed in excess of that recommended by the manufacturer.

(ii) Such speed shall be etched or otherwise permanently marked on the blade, and that speed shall not be exceeded.

(b) Repairs and reconditions.

(i) Shingle saws when reduced in size to less than forty inches in diameter shall be discontinued from service as shingle saws on upright or vertical machines.

(ii) Shingle saws may be reconditioned for use as clipper saws provided the surface is reground and the proper balance attained.

(iii) Shingle saws may be used to no less than thirty-six inches on flat or taper saw machines.

[Statutory Authority: RCW 49.17.040, 49.17.050 and 49.17.240. 81-18-029 (Order 81-21), § 296-78-70509, filed 8/27/81.]

WAC 296-78-70511 Safety rules. (1) General.

(a) Workers shall not leave shingle machines unattended while the carriage is in motion.

(b) Shingle blocks shall not be piled more than one tier high on tables or roll cases. Chunks may be placed horizontally one tier high on top of shingle blocks. Shingle blocks shall be piled in a stable manner, not more than seventy-two inches high, within the immediate working area of the shingle sawyer or the area shall be barricaded.

(c) Provisions shall be made to prevent blocks from falling into the packing area.

(d) On each machine operated by electric motors, positive means shall be provided for rendering such controls or devices inoperative while repairs or adjustments are being made to the machines they control.

(e) Workers shall not stand on top of blocks while in the process of splitting other blocks into bolts.

(2) Jointers (shingle). Shingle jointers shall have the front, or cutting face of the knives, housed except for a narrow slot through which the shingles may be fed against the knives.

[Statutory Authority: RCW 49.17.040, 49.17.050 and 49.17.240. 81-18-029 (Order 81-21), § 296-78-70511, filed 8/27/81.]

WAC 296-78-710 Construction and isolated equipment.

[Statutory Authority: RCW 49.17.040, 49.17.050 and 49.17.240. 81-18-029 (Order 81-21), § 296-78-710, filed 8/27/81.]

WAC 296-78-71001 General. (1) Construction when not specifically covered in these standards shall be governed by such other standards adopted by the department of labor and industries as may apply.

(2) All buildings, docks, tramways, walkways, log dumps and other structures shall be so designed, constructed, and maintained as to provide a safety factor of four. This means that all members shall be capable of supporting four times the maximum load to be imposed. This provision refers to buildings, docks and so forth designed and constructed subsequent to the effective date of these standards and also refers in all cases where either complete or major changes or repairs are made to such buildings, docks, tramways, walkways, log dumps and other structures.

(3) Basements on ground floors under mills shall be evenly surfaced, free from unnecessary obstructions and debris, and provided with lighting facilities in compliance with the requirements of the safety and health core rules, WAC 296-800-210.

(4) All engines, motors, transmission machinery or operating equipment installed in mill basements or ground floors shall be equipped with standard safeguards for the protection of workers.

(5) Flooring of buildings, ramps and walkways not subject to supporting motive equipment shall be of not less than two-inch wood planking or material of equivalent structural strength.

(6) Flooring of buildings, ramps, docks, trestles and other structure required to support motive equipment shall be of not less than full two and one-half inch wood planing or material of equivalent structural strength. However, where flooring is covered by steel floor plates, two inch wood planking or material or equivalent structural strength may be used.

(7) Walkways, docks, and platforms.

(a) Walkways, docks and platforms shall be constructed and maintained in accordance with the requirements of WAC 296-24-735 through 296-24-75011 and WAC 296-800-270.

(b) Maintenance. Walkways shall be evenly floored and kept in good repair.

(c) Where elevated platforms are used they shall be equipped with stairways or ladders in accordance with WAC 296-24-765 through 296-24-81013, and WAC 296-800-250 and 296-800-290.

[Statutory Authority: RCW 49.17.010, 49.17.040, 49.17.050, 49.17.060. 04-18-080, § 296-78-71001, filed 8/31/04, effective 11/1/04; 03-06-076, § 296-78-71001, filed 3/4/03, effective 8/1/03. Statutory Authority: RCW 49.17.010, [49.17].040, and [49.17].050. 01-11-038, § 296-78-71001, filed 5/9/01, effective 9/1/01. Statutory Authority: RCW 49.17.040, 49.17.050 and 49.17.240. 81-18-029 (Order 81-21), § 296-78-71001, filed 8/27/81.]

WAC 296-78-71003 Floor and wall openings. (1) All floor and wall openings either temporary or permanent, shall be protected as required by WAC 296-24-750 through 296-24-75011 and WAC 296-800-260.

(2) The area under floor openings shall, where practical, be fenced off. When this is not practical, the areas shall be plainly marked with yellow lines and telltails shall be installed to hang within five and one-half feet of the ground or floor level.

(3) Where floor openings are used to drop materials from one level to another, audible warning systems shall be installed and used to indicate to employees on the lower level that material is to be dropped.

[Statutory Authority: RCW 49.17.010, [49.17].040, and [49.17].050. 01-11-038, § 296-78-71003, filed 5/9/01, effective 9/1/01. Statutory Authority: Chapter 49.17 RCW. 96-17-056, § 296-78-71003, filed 8/20/96, effective 10/15/96. Statutory Authority: RCW 49.17.040, 49.17.050 and 49.17.240. 81-18-029 (Order 81-21), § 296-78-71003, filed 8/27/81.]

WAC 296-78-71005 Floors, docks, platforms and runways. (1) Faces of docks except on loading and unloading sides of rail and truck loading platforms, and runways used for the operation of lift trucks and other vehicles shall have a guard or shear timber eight by eight inches set over three inch blocks and securely fastened to the floor by bolts of not less than five-eighths inch diameter.

(2) The flooring of buildings, docks and passageways shall be kept in good repair at all times. When a hazardous condition develops that cannot be immediately repaired, the area shall be fenced off and not used until adequate repairs are made.

(3) All working areas shall be kept free from unnecessary obstruction and debris.

(4) Floors around machines and other places where workers are required to stand shall be provided with effective means to prevent slipping.

[Statutory Authority: RCW 49.17.040, 49.17.050 and 49.17.240. 81-18-029 (Order 81-21), § 296-78-71005, filed 8/27/81.]

WAC 296-78-71007 Footwalks and passageways. (1) All footwalks and passageways subject to slipping hazards due to peculiarities of conditions or processes of the operation shall be provided with nonslip surfaces.

(2) Walkways in accordance with WAC 296-78-71001(8) shall be provided over roll casings, transfer tables, conveyors or other moving parts except where stepping over such equipment is not in connection with usual and necessary traffic.

(3) Walkways alongside of sorting tables shall be of sufficient width to provide safe working area. Such walkways shall be evenly floored and kept in good repair at all times. They shall be kept free from obstructions and debris.

(4) When employees are required to clear plug-ups in veneer trays or lumber sorting trays, adequate walkways with standard guardrails shall be provided for access to the trays whenever possible. When walkways are not provided, safety belts or harnesses with lanyards, tied off to substantial anchorages, shall be provided and used at all times.

(5) Walkways and stairways with standard hand rails shall be provided wherever space will permit, for oilers and other employees whose duties require them to go consistently to elevated and hazardous locations.

(a) Where such passageways are over walkways or work areas, standard toeboards shall be provided.

(b) Protection as required by chapter 296-806 WAC, Machine safety, shall be provided against contact with transmission machinery or moving conveyors.

[Statutory Authority: RCW 49.17.010, 49.17.040, 49.17.050, and 49.17.060. 04-14-028, § 296-78-71007, filed 6/29/04, effective 1/1/05. Statutory Authority: RCW 49.17.040, 49.17.050 and 49.17.240. 81-18-029 (Order 81-21), § 296-78-71007, filed 8/27/81.]

WAC 296-78-71009 Stairways and ladders. (1) Stairways shall be used in preference over ladders wherever possible. Stairways or ladders, whichever is used, shall be con-

structed and maintained in accordance with the provisions of WAC 296-24-75009 through 296-24-81013, and WAC 296-800-250 and 296-800-290.

(2) Doors shall not open directly on a flight of stairs.

(3) Permanent ladders shall be fastened securely at both top and bottom.

(4) Portable ladders shall not be used upon footing other than suitable type.

(5) Hooks or other means of securing portable ladders when in use, shall be provided.

(6) Portable ladders shall not be used for oiling machinery which is in motion.

[Statutory Authority: RCW 49.17.010, [49.17].040, and [49.17].050. 01-11-038, § 296-78-71009, filed 5/9/01, effective 9/1/01. Statutory Authority: RCW 49.17.040, 49.17.050 and 49.17.240. 81-18-029 (Order 81-21), § 296-78-71009, filed 8/27/81.]

WAC 296-78-71011 Egress and exit. (1) In all enclosed buildings, means of egress shall be provided in accordance with the provisions of WAC 296-800-310.

(2) All swinging doors shall be provided with windows, the bottom of which shall be not more than forty-eight inches above the floor. One window shall be provided for each section of double swinging doors. All such windows shall be of shatter proof or safety glass unless otherwise protected against breakage.

(3) Outside exits shall open outward. Where sliding doors are used as exits, an inner door not less than two feet six inches by six feet shall be cut inside each of the main doors and arranged to open outward.

(4) At least two fire escapes or substantial outside stairways, shall be provided for mill buildings where the floor level is more than eight feet above the ground.

(a) Buildings over one hundred fifty feet in length shall have at least one additional fire escape or substantial outside stairway for each additional one hundred fifty feet of length or fraction thereof.

(b) Passageways to fire escapes or outside stairways shall be marked and kept free of obstructions at all times.

(c) Fire protection. The requirements of Part G2 (Fire Protection) and Part G3 (Fire Suppression Equipment), chapter 296-24 WAC of the general safety and health standard, and WAC 296-800-300 of the safety and health core rules, shall be complied with in providing the necessary fire protection for sawmills.

(d) Fire drills shall be held at least quarterly and shall be documented.

(5) Where a doorway opens upon a roadway, railroad track, or upon a tramway or dock over which vehicles travel, a barricade or other safeguard and a warning sign shall be placed to prevent workers from stepping directly into moving traffic.

(6) Tramways and trestles shall be substantially supported by piling or framed bent construction which shall be frequently inspected and maintained in good repair at all times. Tramways or trestles used both for vehicular and pedestrian traffic shall have a walkway with standard hand rail at the outer edge and shear timber on the inner edge, and shall provide three feet clearance to vehicles. When walkways cross over other thoroughfares, they shall be solidly fenced at the outer edge to a height of 42 inches over such thoroughfares.

(7) Where tramways and trestles are built over railroads they shall have a vertical clearance of twenty-two feet above the top of the rails. When constructed over carrier docks or roads, they shall have a vertical clearance of not less than six feet above the drivers foot rest on the carrier, and in no event shall this clearance be less than twelve feet from the surface of the lower roadway or dock.

(8) Walkways (either temporary or permanent) shall be not less than twenty-four inches wide and two inches thick, nominal size, securely fastened at each end. When such walkways are used on an incline the angle shall not be greater than twenty degrees from horizontal.

(9) Walkways from the shore or dock to floats or barges shall be securely fastened at the shore end only and clear space provided for the other end to adjust itself to the height of the water.

(10) Cleats of one by four inch material shall be fastened securely across walkways at uniform intervals of eighteen inches whenever the grade is sufficient to create a slipping hazard.

[Statutory Authority: RCW 49.17.010, 49.17.040, 49.17.050, and 49.17.060. 03-06-076, § 296-78-71011, filed 3/4/03, effective 8/1/03. Statutory Authority: RCW 49.17.010, [49.17].040, and [49.17].050. 01-11-038, § 296-78-71011, filed 5/9/01, effective 9/1/01. Statutory Authority: RCW 49.17.040, 49.17.050 and 49.17.240. 81-18-029 (Order 81-21), § 296-78-71011, filed 8/27/81.]

WAC 296-78-71013 Cableways. (1)(a) Inclined cableways shall have a central line between the rails in practical alignment with the center of the hoisting drums. A substantial bumper shall be installed at the foot of each incline.

(b) Barricades or warning signs shall be installed to warn pedestrians to stand clear of the cables on inclined cableways. The cables shall not be put into motion without activating an alarm system, either audible or visible, which will inform anyone on the tracks to stand clear.

(2) Employees shall not ride on or stand below the cars on an inclined cableway.

[Statutory Authority: RCW 49.17.040, 49.17.050 and 49.17.240. 81-18-029 (Order 81-21), § 296-78-71013, filed 8/27/81.]

WAC 296-78-71015 Tanks and chemicals. (1) All open vats and tanks into which workers may fall shall be guarded with standard railings or screen guards in all cases where such guarding is possible with regard to practical operation.

(2) Foundations of elevated tanks shall be accessible for inspections. When the tank platform is more than five feet above the ground a stairway or ladder shall be permanently attached.

(3) Every open tank over five feet in height shall be equipped with fixed standard ladders both inside and out, extending from the bottom to the rim of the tank arranged to be accessible to each other, so far as local conditions permit.

(4) The use of chemicals for treating of lumber for prevention of sap stain or mold or as preservatives, shall conform to the requirements of chapter 296-835 WAC, Dipping and coating operations (dip tanks).

(a) Storage, handling, and use of chemicals. Threshold limits. Employees shall not be exposed to airborne concentration of toxic dusts, vapors, mists or gases that exceed the threshold limit values set forth in chapter 296-62 WAC, Part H, and chapter 296-62 WAC, Part E, general occupational health standards.

(b) Protective equipment. The use of chemicals shall be controlled so as to protect employees from harmful exposure to toxic materials. Where necessary, employees shall be provided with and required to wear such protective equipment as will afford adequate protection against harmful exposure as required by WAC 296-800-160, and chapter 296-62 WAC, Part E, general occupational health standards.

(5)(a) Means shall be provided and used to collect any excess of chemicals used in treating lumber so as to protect workers from accidental contact with harmful concentrations of toxic chemicals or fumes.

(b) Dip tanks containing flammable or combustible liquids shall be constructed, maintained and used in accordance with chapter 296-835 WAC, Dipping and coating operations (dip tanks).

(c) An evacuation plan shall be developed and implemented for all employees working in the vicinity of dip tanks using flammable and/or combustible liquids. A copy of the plan shall be available at the establishment for inspection at all times. Every employee shall be made aware of the evacuation plan and know what to do in the event of an emergency and be evacuated in accordance with the plan. The plan shall be reviewed with employees at least quarterly and documented.

(d) When automatic foam, automatic carbon dioxide or automatic dry chemical extinguishing systems are used, an alarm device shall be activated to alert employees in the dip tank area before and during the activation of the system. The following combinations of extinguishment systems when used in conjunction with the evacuation plan as stated above will be acceptable in lieu of bottom drains:

(i) A dip tank cover with an automatic foam extinguishing system under the cover, or an automatic carbon dioxide system, or an automatic dry chemical extinguishing system, or an automatic water spray extinguishing system;

(ii) An automatic dry chemical extinguishing system with an automatic carbon dioxide system or a second automatic dry chemical extinguishing system or an automatic foam extinguishing system;

(iii) An automatic carbon dioxide system with a second automatic carbon dioxide system or an automatic foam extinguishing system.

(e) The automatic water spray extinguishing systems, automatic foam extinguishing systems, and dip tank covers shall conform with the requirements of chapter 296-835 WAC, Dipping and coating operations (dip tanks). The automatic carbon dioxide systems and dry chemical extinguishing system shall conform with the requirements of WAC 296-24-615 and 296-24-620.

(6) Where workers are engaged in the treating of lumber with chemicals or are required to handle lumber or other materials so treated, the workers shall be provided with, at no cost to the worker, and required to use such protective equipment as will provide complete protection against contact with toxic chemicals or fumes therefrom.

(7) Sanitation requirements. The requirements of WAC 296-800-220 and 296-800-230 (safety and health core rules), shall govern sanitation practices.

(8) The sides of steam vats and soaking pits unless otherwise guarded shall extend forty-two inches above the floor level. The floor adjacent thereto shall be of nonslip construction.

(9) Large steam vats or soaking pits, divided into sections, shall be provided with substantial walkways between each section, each walkway to be provided with standard railings which may be removable if necessary.

(10) Covers shall be removed only from that portion of the steaming vats on which workers are working and a portable railing shall be placed at this point to protect the operators.

(11) Workers shall not ride or step on logs in steam vats.

[Statutory Authority: RCW 49.17.010, [49.17].040, and [49.17].050. 02-15-102, § 296-78-71015, filed 7/17/02, effective 10/1/02; 01-11-038, § 296-78-71015, filed 5/9/01, effective 9/1/01. Statutory Authority: Chapter 49.17 RCW. 96-17-056, § 296-78-71015, filed 8/20/96, effective 10/15/96; 94-20-057 (Order 94-16), § 296-78-71015, filed 9/30/94, effective 11/20/94. Statutory Authority: RCW 49.17.040, 49.17.050 and 49.17.240. 81-18-029 (Order 81-21), § 296-78-71015, filed 8/27/81.]

WAC 296-78-71017 Dry kilns. (1) Dry kilns shall be so constructed upon solid foundations that tracks will not sag. Dry kilns shall be provided with suitable walkways. Each kiln shall have doors that operate from the inside and be provided with escape doors of adequate height and width to accommodate an average size man, that also operates from the inside, and shall be located in or near the main door. Escape doors shall swing in the direction of exit. Kiln doors and door carriers shall be fitted with safety devices to prevent the doors or carriers from falling.

(2) Ladders. A fixed ladder, in accordance with the requirements of WAC 296-24-810 through 296-24-81013 of the general safety and health standards and WAC 296-800-290 of the safety and health core rules, or other means shall be provided to permit access to the roof. Where controls and machinery are mounted on the roof, a permanent stairway with standard handrail shall be installed in accordance with the requirements of WAC 296-800-290.

(3) A heated room shall be provided for the use of the kiln operator in inclement weather. He should remain in such room for at least ten minutes after leaving a hot kiln before going to cold outside air.

(4) Where operating pits are used, they shall be well ventilated, drained and lighted. Substantial gratings shall be installed at the kiln floor line. Steam lines shall be provided with insulation wherever exposed to contact by employees. Fans shall be enclosed by standard safeguards.

(5) Mechanical equipment. All belts, pulleys, blowers, and other exposed moving equipment used in or about kilns shall be guarded in accordance with chapter 296-806 WAC, Machine safety.

[Statutory Authority: RCW 49.17.010, 49.17.040, 49.17.050, and 49.17.060. 04-14-028, § 296-78-71017, filed 6/29/04, effective 1/1/05. Statutory Authority: RCW 49.17.010, [49.17].040, and [49.17].050. 01-11-038, § 296-78-71017, filed 5/9/01, effective 9/1/01. Statutory Authority: Chapter 49.17 RCW. 96-17-056, § 296-78-71017, filed 8/20/96, effective 10/15/96. Statutory Authority: RCW 49.17.040, 49.17.050 and 49.17.240. 81-18-029 (Order 81-21), § 296-78-71017, filed 8/27/81.]

WAC 296-78-71019 Exhaust systems. (1) Air requirements in buildings, where persons are habitually employed, shall meet the requirements of the general occupational health standard, WAC 296-62-100 through 296-62-11013.

(2) Where the natural ventilation is not sufficient to remove dust, fumes or vapors that create or constitute a hazard, additional means of removal shall be provided.

(3) All mills containing one or more machines whose operations create dust, shavings, chips or slivers during a period of time equal to or greater than one-fourth of the working day or shift, shall be equipped with a collecting system either continuous or automatic in action and of sufficient strength and capacity to thoroughly remove such refuse from the points of operation of the machines and the work areas.

(4) Each woodworking machine that creates dust, shavings, chips, or slivers shall be equipped with an exhaust or conveyor system located and adjusted to remove the maximum amount of refuse from the point of operation and immediate vicinity.

(5) Blower, collecting and exhaust systems shall be designed, constructed and maintained in accordance with American National Standards Z33.1 - 1961 (for the installation of blower and exhaust systems for dust, stock and vapor removal or conveying) and Z12.2 - 1962 (R1969) (code for the prevention of dust explosions in woodworking and wood flour manufacturing plants).

(6) Fans used for ventilating shall be of ample capacity, as evidenced by the performance schedules of the manufacturers, and shall be guarded when exposed to contact. Hoods, dust conveyors, dust collectors and other accessary equipment shall be large enough to insure free intake and discharge.

(7) The outlet or discharge of all ventilating equipment shall be so arranged that at no time will the dust, vapors, gases or other air borne impurities discharged, create or constitute a hazard.

(8) Where a hood is used to form a part or all of the guard required on a given machine, it shall be constructed of not less than ten U.S. gauge sheet metal, or if of cast iron it shall be not less than three-sixteenths inches in thickness.

(9) All exhaust pipes shall be of such construction and internal dimensions as to minimize the possibility of clogging. They shall be readily accessible for cleaning.

(10) All exhaust pipes shall empty into settling or dust chambers which shall effectively prevent the dust or refuse from entering any work area. Such settling or dust chambers shall be so designed and operated as to reduce to a minimum the danger of fire or dust explosions.

(11) In lieu of a general ventilating system, exhaust or blower units may be installed on the dust or fume producing machine, provided the required protection is secured thereby.

(12) When proper ventilation is not provided, and temporary hazardous conditions are therefore encountered, the employer shall furnish approved respiratory and visual equipment: Provided, however, That the exposure to such hazard shall not be for more than two hours duration. Protective measures and equipment shall meet the requirements of the general occupational health standard, chapter 296-62 WAC, Part E.

(13) Provisions for the daily removal of refuse shall be made in all operations not required to have an exhaust system, or having refuse too heavy, or bulky, or otherwise unsuitable to be handled by an exhaust system.

[Statutory Authority: RCW 49.17.010, [49.17].040, and [49.17].050. 01-11-038, § 296-78-71019, filed 5/9/01, effective 9/1/01; 99-10-071, § 296-78-71019, filed 5/4/99, effective 9/1/99. Statutory Authority: RCW 49.17.040, 49.17.050 and 49.17.240. 81-18-029 (Order 81-21), § 296-78-71019, filed 8/27/81.]

WAC 296-78-71021 Spray painting. All spray painting operations shall be carried on in accordance with the requirements of the general safety and health standard, WAC 296-24-370 through 296-24-37027 and the general occupational health standard, WAC 296-62-11019.

[Statutory Authority: RCW 49.17.040, 49.17.050 and 49.17.240. 81-18-029 (Order 81-21), § 296-78-71021, filed 8/27/81.]

WAC 296-78-71023 Lighting. The lighting and illumination requirements of the safety and health core rules, WAC 296-800-210, shall apply.

[Statutory Authority: RCW 49.17.010, [49.17].040, and [49.17].050. 01-11-038, § 296-78-71023, filed 5/9/01, effective 9/1/01. Statutory Authority: RCW 49.17.040 and 49.17.050. 82-13-045 (Order 82-22), § 296-78-71023, filed 6/11/82. Statutory Authority: RCW 49.17.040, 49.17.050 and 49.17.240. 81-18-029 (Order 81-21), § 296-78-71023, filed 8/27/81.]

WAC 296-78-71025 Gas piping and appliances. All gas piping and appliances shall be installed in accordance with the American National Standard Requirements for Gas Appliances and Gas Piping Installations, Z21.30 - 1964.

[Statutory Authority: RCW 49.17.040, 49.17.050 and 49.17.240. 81-18-029 (Order 81-21), § 296-78-71025, filed 8/27/81.]

WAC 296-78-715 Mechanical, steam and electrical equipment.

[Statutory Authority: RCW 49.17.040, 49.17.050 and 49.17.240. 81-18-029 (Order 81-21), § 296-78-715, filed 8/27/81.]

WAC 296-78-71501 General provisions. (1) All machinery or other equipment located or used on the premises of the operation or in the processes incidental thereto, shall be provided and maintained with approved standard safeguards, irrespective of ownership.

(2) Machines shall be so located that each operator will have sufficient space in which to handle material with the least possible interference from or to other workers or machines.

(3) Machines shall be so placed that it will not be necessary for the operator to stand where passing traffic creates a hazard.

(4) Aisles of sufficient width to permit the passing of vehicles or employees without crowding shall be provided in all work areas and stock or storage rooms.

(5) All metal decking around machinery shall be equipped to effectively prevent slipping.

(6) All machinery or equipment started by a control so located as to create impaired vision of any part of such machinery or equipment shall be provided with an audible warning device, where such machinery or equipment is exposed to contact at points not visible to the operator. Such devices shall be sounded before starting up unless positive mechanical or electrical interlocking controls are provided which will prevent starting until all such posts are cleared.

(7) A mechanical or electrical power control device shall be provided at each machine which will make it possible for the operator to stop the machine feed without leaving his position at the point of operation.

(8) All machines operated by means of treadles, levers, or other similar devices, shall be provided with positive and approved nonrepeat devices except where such machine is being used as an automatic repeating device.

(9) Operating levers and treadles on all machines or machinery shall be so located and protected that they cannot be shifted or tripped accidentally.

(10) All power driven machinery shall be stopped and brought to a complete standstill before any repairs or adjustments are made or pieces of material or refuse removed, except where motion is necessary to make adjustments.

[Statutory Authority: RCW 49.17.040, 49.17.050 and 49.17.240. 81-18-029 (Order 81-21), § 296-78-71501, filed 8/27/81.]

WAC 296-78-71503 Lock out—Tag out. (1) To avoid accidental activation of machinery, electrical devices or other equipment which could create a hazardous condition while performing maintenance, repair, cleanup or construction work, the main disconnect(s) (line circuit breakers) shall first be locked out and tagged in accordance with the following provisions:

(2) Effective date. Effective July 1, 1982, only padlocks or other equivalent protective devices shall be used for locking out the main disconnect(s) (line circuit breakers) of machinery, electrical devices or other equipment that is shut down while maintenance, repair, cleanup, construction work or other type of work is done to the equipment. Tags shall be used to supplement the padlocks or other equivalent protective devices, and shall be used only for informational purposes.

(3) Padlocks, tags or equivalent protective devices to be supplied. The employer shall supply and the employee(s) shall use as many padlocks or other equivalent protective devices as are necessary to effectively lock out all affected equipment.

(4) Lock out plan. An effective lock out plan shall be formulated in writing and all concerned employees so informed. The plan shall contain specific procedures for locking out equipment, information to be contained on supplemental tags and specific procedures for unlocking equipment after repairs, cleanup, etc., have been completed.

(5) Informational tags. Tags used for providing supplemental information with lock out padlocks or other equivalent protective devices shall contain the name of the person authorizing placement, reason for placing, date, signature of person placing tag and such other relative information as deemed necessary by the person placing the tag.

(6) Lock out by pushbutton only. Locking out a machine or item of equipment by use of a pushbutton or other local control device only will not be acceptable as meeting the intent of these rules.

(7) Coordination of locking out devices. When repair, adjustment, cleanup, maintenance or construction work is necessary and the lock out procedures must be followed by any person not familiar with all power sources or material entry sources to any area involved, that person shall consult with the operator, supervisor, or some person that is capable of informing him of proper lock out procedures and supplemental tagging information.

(8) Lock out before removing guards. Equipment shall be stopped and locked out before employees remove guards or reach into any potentially hazardous area. The only exception to this rule will be when equipment must be in motion in order to make proper adjustments.

(9) Removal of lock outs. Each person actively engaged in the repair, maintenance, cleanup, etc., shall lock out the affected equipment and place the informational tag. Upon completion of the work and reinstallation of the guards, that person shall personally remove his lock and tag, except when it is positively determined that an employee has left the premises without removing his lock and tag, other persons may remove the locks and tags in accordance with a procedure formulated by each firm and approved by the division of industrial safety and health.

(10) Valves to be locked and tagged out. Each valve used to control the flow of hazardous materials into, or used to activate the equipment being worked on, shall be locked and tagged out.

(11) Piping systems deactivated. Prior to working on piping systems containing pressurized or hazardous materials, the valve(s) controlling the flow to the affected area shall be locked and tagged out. The piping in the area to be worked on shall be drained and purged, if needed. If the piping contains hazardous materials, the piping shall be isolated from the work area by the insertion of blank flanges in the piping system.

(12) Pipe lines without valves. If pipelines or ducts are constructed without valves or closures that can be locked out, the lines or ducts shall be broken at a flange and a blank flange inserted to stop accidental flow of any hazardous material.

(13) Testing after lock out. After locking out and tagging equipment, a test shall be conducted to ascertain that the equipment has been made inoperative or the flow of hazardous material has been positively stopped. Precautions shall be taken to ascertain that persons will not be subjected to hazard while conducting the test if power source or flow of material is not shut off.

(14) Temporary or alternate power to be avoided. Whenever possible, temporary or alternate sources of power to the equipment being worked on shall be avoided. If the use of such power is necessary, all affected employees shall be informed and the source of temporary or alternate power shall be identified.

[Statutory Authority: RCW 49.17.040, 49.17.050 and 49.17.240. 81-18-029 (Order 81-21), § 296-78-71503, filed 8/27/81.]

WAC 296-78-71505 Mechanical power transmission apparatus. (1) Machines and other equipment shall not be oiled while in motion, unless provided with guards or other devices to permit oiling without any possibility of contact with moving parts of machinery.

(2) Inspections shall be made to assure that shaftings, bearings and machines are in proper alignment at all times and that bolts in shaft hangars, couplings and boxes are tight.

(3) Isolated bearings or other equipment not reached by walkway shall be served by a ladder or other means of safe access.

(4) Running belts under power on or off pulleys shall be accomplished by mechanical means which will not expose employees to moving elements of the operation.

(5) Counterweights located on or near passageways or work areas shall be provided with enclosures. Overhead counterweights shall be provided with substantial safety chains or cables, or otherwise secured against falling.

(6) The construction, operation, and maintenance of all mechanical power-transmission apparatus shall be in accordance with chapter 296-806 WAC, Machine safety.

(7) Baffles shall be erected, where necessary, to protect employees from breaking belts, chains, ropes or cables.

(8) Overhead horizontal belts, chains or rope drives shall be provided with guards.

(9) Hydraulic systems. Means shall be provided to block, chain, or otherwise secure equipment normally supported by hydraulic pressure so as to provide for safe maintenance.

[Statutory Authority: RCW 49.17.010, 49.17.040, 49.17.050, and 49.17.060. 04-14-028, § 296-78-71505, filed 6/29/04, effective 1/1/05. Statutory Authority: RCW 49.17.040, 49.17.050 and 49.17.240. 81-18-029 (Order 81-21), § 296-78-71505, filed 8/27/81.]

WAC 296-78-720 Boiler and pressure vessels. Boilers and pressure vessels shall be constructed, maintained and inspected in accordance with the provisions of the boiler and unfired pressure vessel law, chapter 70.79 RCW, and chapter 296-104 WAC as administered by the boiler inspection section of the department of labor and industries.

[Statutory Authority: RCW 49.17.040, 49.17.050 and 49.17.240. 81-18-029 (Order 81-21), § 296-78-720, filed 8/27/81.]

WAC 296-78-725 Nonionizing radiation. (1) Only qualified and trained employees shall be assigned to install, operate, adjust, and maintain laser equipment. Proof of qualification of the laser equipment operator shall be available and in possession of operator at all times.

(2) Employees, when working in areas in which a potentially hazardous exposure (see WAC 296-62-09005(4)) to direct or reflected laser radiation exists, shall be provided with antilaser eye protection devices specified in WAC 296-62-09005, general occupational health standards.

(3) Areas in which lasers are used shall be posted with standard laser warning placards.

(4) Beam shutters or caps shall be utilized, or the laser turned off, when laser transmission is not actually required. When the laser is left unattended for a substantial period of time, such as during lunch hour, overnight, or at change of shifts, the laser shall be turned off or shutters or caps shall be utilized.

(5) The laser beam shall not be directed at employees.

(6) Only mechanical or electronic means shall be used as a detector for guiding the internal alignment of the laser.

(7) The laser equipment shall bear such labels, logos and data placards to indicate maximum output and class designation as required of the manufacturer at time of sale, by I.A.W. Part 1040, CFR Title 21. Such labels, logos, data placards, etc., shall be maintained in a legible condition.

(8) When it is raining or snowing, or when there is dust or fog in the air, and it is impracticable to cease laser system operation, employees shall be kept out of range of the area of source and target during such weather conditions.

(9) Employees shall not be exposed to light intensities in excess of:

(a) Direct staring: One micro-watt per square centimeter;

(b) Incidental observing: One milliwatt per square centimeter;

(c) Diffused reflected light: Two and one-half watts per square centimeter.

(10) The laser equipment shall not be modified except by the manufacturer.

(11) Laser unit in operation shall be set up above the heads of the employees, when possible.

(12) Employees shall not be exposed to radio frequency/microwave radiation in excess of the permissible exposure limits specified in WAC 296-62-09005.

[Statutory Authority: Chapter 49.17 RCW. 96-17-056, § 296-78-725, filed 8/20/96, effective 10/15/96. Statutory Authority: RCW 49.17.040, 49.17.050 and 49.17.240. 81-18-029 (Order 81-21), § 296-78-725, filed 8/27/81.]

WAC 296-78-730 Electrical service and equipment. (1) Electrical service and equipment shall be constructed, maintained, inspected and operated according to chapter 296-24 WAC, General safety and health standards, Part L, and WAC 296-800-280 of the safety and health core rules.

(2) Repairs. Electrical repairs shall be made only by authorized and qualified personnel.

(3) Identification. Marks of identification on electrical equipment shall be clearly visible.

(4) Protective equipment. Rubber protective equipment shall be provided as required by WAC 296-24-092(1) of the general safety and health standard.

(5) Open switches. Before working on electrical equipment, switches shall be open and shall be locked out.

(6) Concealed conductors. Where electrical conductors are known to be concealed, no work shall be performed until such conductors are located.

(7) Overload relays. Overload relays shall be reset by authorized qualified personnel only.

(8) Passageways to panels. Passageways to switch centers or panels shall at all times be kept free from obstruction. Not less than three feet of clear space shall be maintained in front of switch centers or panels at all times.

(9) Bridging fuses. Fuses shall not be doubled or bridged.

[Statutory Authority: RCW 49.17.010, [49.17].040, and [49.17].050. 01-11-038, § 296-78-730, filed 5/9/01, effective 9/1/01. Statutory Authority: Chapter 49.17 RCW. 91-24-017 (Order 91-07), § 296-78-730, filed 11/22/91, effective 12/24/91. Statutory Authority: RCW 49.17.040, 49.17.050 and 49.17.240. 81-18-029 (Order 81-21), § 296-78-730, filed 8/27/81.]

WAC 296-78-735 Elevators, moving walks. Elevators, moving walks and other lifting devices intended for either passenger or freight service shall be constructed, maintained, inspected and operated in accordance with the provisions of chapter 70.87 RCW, WAC 296-24-875 through 296-24-90009 of the general safety and health standards, and those specific standards which are applicable from the division of building and construction safety inspection services, elevator section.

[Statutory Authority: RCW 49.17.010, [49.17].040, and [49.17].050. 01-11-038, § 296-78-735, filed 5/9/01, effective 9/1/01. Statutory Authority: RCW

49.17.040, 49.17.050 and 49.17.240. 81-18-029 (Order 81-21), § 296-78-735, filed 8/27/81.]

WAC 296-78-740 Transportation—Lumber handling equipment—Cranes—Construction. (1) All apparatus shall be designed throughout, with not less than the following factors of safety, under static full rated load stresses, based on ultimate strength of the material used:

Material	Factor of Safety
Cast iron	12
Cast steel	8
Structural steel	5
Forged steel	5
Cables	5

(2) A notice shall be placed on every crane and hoist showing the maximum allowable load in pounds or tons. This notice shall be placed in such a manner as to be clearly legible from the floor.

(3) Cranes shall be of what is known as "all steel construction." No cast iron shall be used in parts subject to tension except in drums, trolley sides, bearings, brackets and brake shoes.

(4) The construction of cranes shall be such that all parts may be safely lubricated and inspected when cranes are not in operation.

(5) Bolts subject to stress shall be of the through type and all bolts shall be equipped with approved protection so that the bolt will not work loose or nuts work off.

(6) Outside crane cages shall be enclosed. There shall be windows on three sides of the cage and windows in the front, and the side opposite the door shall be the full width of the cage.

(7) Where a tool box or receptacle is used for the storing of oil cans, tools, etc., it shall be permanently secured in the cage or on the foot-walk of outside cranes and on the foot-walk of inside cranes. Tool boxes of hot metal cranes shall be constructed of metal.

(8) All gears on cranes shall be provided with standard guards.

(9) Keys projecting from revolving shafts shall be guarded.

(10) A braking apparatus shall be provided on every type of crane and shall be so designed and installed as to be capable of effectually braking a weight of at least one and one-half times the full rated load.

[Statutory Authority: RCW 49.17.040, 49.17.050 and 49.17.240. 81-18-029 (Order 81-21), § 296-78-740, filed 8/27/81.]

WAC 296-78-745 Electrical equipment. (1) All exposed current-carrying parts except conductors, connected to circuits above three hundred volts to ground shall be so isolated, insulated, or guarded that no employee can come in contact with them. Exposed parts less than 300 volts shall be protected in some suitable way against possible accidental contact. Exposed metallic parts of conduit armored cable or molding shall be permanently grounded.

(2) Guards for the current-carrying parts of unisolated electrical equipment, such as controllers, motors, transformers, automatic cutouts, circuit breakers, switches, and other devices shall consist of cabinets, casings, or shields of permanently grounded metal or of insulating material.

(3) All parts of electrical equipment, such as fuses and the handles and arc chutes of circuit breakers, shall be so isolated or guarded that the liability of employees being struck or burned by sparking, flashing or movement during operation is reduced to a minimum.

(4) All exposed noncurrent carrying metal parts of electrical equipment shall be permanently grounded. The ground connection through well bonded track rails will be considered satisfactory.

(5) The metallic parts of portable cranes, derricks, hoists, and similar equipment on which wires, cables, chains, or other conducting objects are maintained shall be provided with an effective protective ground, where operated in the vicinity of supply lines.

(6) Readily accessible means shall be provided whereby all conductors and equipment located in cranes can be disconnected entirely from the source of energy at a point as near as possible to the main current collectors.

(7) Means shall be provided to prevent the starting and operation of equipment by unauthorized persons.

(8) The control levers of traveling cranes shall be so located that the operator can readily face the direction of travel.

(9) A hoist limiting device shall be provided for each hoist.

(10) All fuses shall be of the enclosed arcless type.

[Statutory Authority: RCW 49.17.040, 49.17.050 and 49.17.240. 81-18-029 (Order 81-21), § 296-78-745, filed 8/27/81.]

WAC 296-78-750 Chains, wire rope, cables and fiber rope. (1) Ropes, cables, slings, and chains.

(a) Safe usage. Ropes, cables, slings, and chains shall be used in accordance with safe use practices recommended by the manufacturer or within safe limits recommended by the equipment manufacturer when used in conjunction with it.

Work by qualified persons. Installation, inspection, maintenance, repair, and testing of ropes, cables, slings, and chains shall be done only by persons qualified to do such work.

(b) Proof testing. The employer shall ensure that before use, each new, repaired, or reconditioned alloy steel chain sling, including all welded components in the sling assembly, shall be proof tested by the sling manufacturer or equivalent entity, in accordance with paragraph 5.2 of the American Society of Testing and Materials Specification A391.65 (ANSI G61.1-1968). The employer shall retain the certificate of the proof test and shall make it available for examination. When a chain sling assembly is made up of segments of proof tested alloy chain and proof tested individual components such as mechanical coupling links, hooks and similar devices; it is not necessary to test the assembled unit, when appropriate test certification of individual components is available and the assembled sling is appropriately tagged by the manufacturer or equal entity. The sling shall not be used in excess of the rated capacity of the weakest component.

(c) Slings. Slings and their fittings and fastenings, when in use, shall be inspected daily for evidence of overloading, excessive wear, or damage. Slings found to be defective shall be removed from service.

(2) Proper storage shall be provided for slings while not in use.

(3) Protection shall be provided between the sling and sharp unyielding surfaces of the load to be lifted.

(4) Hooks. No open hook shall be used in rigging to lift any load where there is hazard from relieving the tension on the hook from the load or hook catching or fouling.

(5) Ropes or cables. Wire rope or cable shall be inspected when installed and once each day thereafter, when in use. It shall be removed from hoisting or load-carrying service when kinked or when one of the following conditions exist:

(a) When three broken wires are found in one lay of 6 by 6 wire rope.

(b) When six broken wires are found in one lay of 6 by 19 wire rope.

(c) When nine broken wires are found in one lay of 6 by 37 wire rope.

(d) When eight broken wires are found in one lay of 8 by 19 wire rope.

(e) When marked corrosion appears.

(f) Wire rope of a type not described herein shall be removed from service when four percent of the total number of wires composing such rope are found to be broken in one lay.

(g) Condemned. When wire rope, slings or cables deteriorate through rust, wear, broken wires, kinking or other conditions, to the extent there is a reasonable doubt that the necessary safety factor is maintained, the use of such equipment shall be discontinued.

(6) Wire rope removed from service due to defects shall be plainly marked or identified as being unfit for further use on cranes, hoists, and other load-carrying devices.

(7) The ratio between the rope diameter and the drum, block, sheave, or pulley tread diameter shall be such that the rope will adjust itself to the bend without excessive wear, deformation, or injury. In no case shall the safe value of drums, blocks, sheaves, or pulleys be reduced when replacing such items unless compensating changes are made for rope used and for safe loading limits.

(8) Drums, sheaves, and pulleys. Drums, sheaves, and pulleys shall be smooth and free from surface defects liable to injure rope. Drums, sheaves, or pulleys having eccentric bores or cracked hubs, spokes, or flanges shall be removed from service.

(9) Connections. Connections, fittings, fastenings, and other parts used in connection with ropes and cables shall be of the quality, size and strength recommended by the manufacturer for the use intended. These connections shall be installed in accordance with the manufacturer's recommendations.

(10) Socketing, splicing, and seizing.

(a) Socketing, splicing, and seizing of cables shall be performed only by qualified persons.

(b) All eye splices shall be made in a manner recommended by the manufacturer and wire rope thimbles of proper size shall be fitted in the eye, except that in slings the use of thimbles shall be optional.

(11) Wire rope clips attached with U-bolts shall have these bolts on the dead or short end of the rope. The U-bolt nuts shall be retightened immediately after initial load carrying use and at frequent intervals thereafter. The number and spacing of clips shall be as follows:

Improved Plow Steel Diameter of Rope	Number of Clips (Drop Forged)	Required Other Material	Minimum Space Between Clips
3/8 to 5/8"	3	4	3-3/4 "
3/4"	4	5	4-1/2 "
7/8"	4	5	5-1/4 "
1 "	5	6	6 "
1-1/8"	6	6	6-3/4 "
1-1/4"	6	7	7-1/2 "
1-3/8"	7	7	8-1/4 "
1-1/2"	7	8	9 "

(a) When a wedge socket-type fastening is used, the dead or short end of the cable shall be clipped with a U-bolt or otherwise made secure against loosening.

(b) Fittings. Hooks, shackles, rings, pad eyes, and other fittings that show excessive wear or that have been bent, twisted, or otherwise damaged shall be removed from service.

(12) Running lines. Running lines of hoisting equipment located within six feet six inches of the ground or working level shall be boxed off or otherwise guarded, or the operating area shall be restricted.

(13) Preventing abrasion. The reeving of a rope shall be so arranged as to minimize chafing or abrading while in use.

(14) Sheave guards. Bottom sheaves shall be protected by close fitting guards to prevent cable from jumping the sheave.

(15) There shall be not less than two full wraps of hoisting cable on the drums of cranes and hoists at all times of operation.

(16) Where the cables are allowed to pile on the drums of cranes, the drums shall have a flange at each end to prevent the cables from slipping off the drum.

(17) Chains. Chains used in load carrying service shall be inspected before initial use and weekly thereafter.

If at any time any three-foot length of chain is found to have stretched one-third the length of a link it shall be discarded.

(18) Chains shall be spliced in compliance with the requirements of the general safety and health standard, WAC 296-24-29413.

(19) Wherever annealing of chains is attempted, it shall be done in properly equipped annealing furnaces and under the direct supervision of a competent person thoroughly versed in heat treating.

Chain shall be normalized or annealed periodically as recommended by the manufacturer.

(20) Fiber rope.

(a) Frozen fiber rope shall not be used in load carrying service.

(b) Fiber rope that has been subjected to acid shall not be used for load carrying purposes.

(c) Fiber rope shall be protected from abrasion by padding where it is fastened or drawn over square corners or sharp or rough surfaces.

[Statutory Authority: Chapter 49.17 RCW. 96-17-056, § 296-78-750, filed 8/20/96, effective 10/15/96. Statutory Authority: RCW 49.17.040, 49.17.050 and 49.17.240. 81-18-029 (Order 81-21), § 296-78-750, filed 8/27/81.]

WAC 296-78-755 Natural and synthetic fiber rope slings. (1) Sling use.

(a) Fiber rope slings made from conventional three strand construction fiber rope shall not be used with loads in excess of the rated capacities prescribed in Tables D-16 through D-19 of Part "D" of the general safety and health standards, chapter 296-24 WAC.

(b) Slings not included in these tables shall be used only in accordance with the manufacturer's recommendations.

(2) Safe operating temperatures. Natural and synthetic fiber rope slings, except for wet frozen slings, may be used in a temperature range from minus 20°F to plus 180°F without decreasing the working load limit. For operations outside this temperature range and for wet frozen slings, the sling manufacturer's recommendations shall be followed.

(3) Splicing. Spliced fiber rope slings shall not be used unless they have been spliced in accordance with the following minimum requirements and in accordance with any additional recommendations of the manufacturer:

(a) In manila rope, eye splices shall consist of at least three full tucks, and short splices shall consist of at least six full tucks, three on each side of the splice center line.

(b) In synthetic fiber rope, eye splices shall consist of at least four full tucks, and short splices shall consist of at least eight full tucks, four on each side of the center line.

(c) Strand end tails shall not be trimmed flush with the surface of the rope immediately adjacent to the full tucks. This applies to all types of fiber rope and both eye and short splices. For fiber rope under one inch in diameter, the tail shall project at least six rope diameters beyond the last full tuck. For fiber rope one inch in diameter and larger, the tail shall project at least six inches beyond the last full tuck. Where a projecting tail interferes with the use of the sling, the tail shall be tapered and spliced into the body of the rope using at least two additional tucks (which will require a tail length of approximately six rope diameters beyond the last full tuck).

(d) Fiber rope slings shall have a minimum clear length of rope between eye splices equal to ten times the rope diameter.

(e) Knots shall not be used in lieu of splices.

(f) Clamps not designed specifically for fiber ropes shall not be used for splicing.

(g) For all eye splices, the eye shall be of such size to provide an included angle of not greater than sixty degrees at the splice when the eye is placed over the load or support.

(4) End attachments. Fiber rope slings shall not be used if end attachments in contact with the rope have sharp edges or projections.

(5) Removal from service. Natural and synthetic fiber rope slings shall be immediately removed from service if any of the following conditions are present:

(a) Abnormal wear.

(b) Powdered fiber between strands.

(c) Broken or cut fibers.

(d) Variations in the size or roundness of strands.

(e) Discoloration or rotting.

(f) Distortion of hardware in the sling.

(6) Repairs. Only fiber rope slings made from new rope shall be used. Use of repaired or reconditioned fiber rope slings is prohibited.

[Statutory Authority: RCW 49.17.040, 49.17.050 and 49.17.240. 81-18-029 (Order 81-21), § 296-78-755, filed 8/27/81.]

WAC 296-78-760 Synthetic web slings. (1) Sling identification. Each sling shall be marked or coded to show the rated capacities for each type of hitch and type of synthetic web material.

(2) Webbing. Synthetic webbing shall be of uniform thickness and width and selvage edges shall not be split from the webbing's width.

(3) Fittings. Fittings shall be:

(a) Of a minimum breaking strength equal to that of the sling; and

(b) Free of all sharp edges that could in any way damage the webbing.

(4) Attachment of end fittings to webbing and formation of eyes. Stitching shall be the only method used to attach end fittings to webbing and to form eyes. The thread shall be in an even pattern and contain a sufficient number of stitches to develop the full breaking strength of the sling.

(5) Sling use. Synthetic web slings illustrated in Figure D-6 shall not be used with loads in excess of the rated capacities specified in Tables D-20 through D-22. Slings not included in these tables shall be used only in accordance with the manufacturer's recommendations.

(6) Environmental conditions. When synthetic web slings are used, the following precautions shall be taken:

(a) Nylon web slings shall not be used where fumes, vapors, sprays, mists or liquids of acids or phenolics are present.

(b) Polyester and polypropylene web slings shall not be used where fumes, vapors, sprays, mists or liquids of caustics are present.

(c) Web slings with aluminum fittings shall not be used where fumes, vapors, sprays, mists or liquids of caustics are present.

(7) Safe operating temperatures. Synthetic web slings of polyester and nylon shall not be used at temperatures in excess of 180°F. Polypropylene web slings shall not be used at temperatures in excess of 200°F.

(8) Repairs.

(a) Synthetic web slings which are repaired shall not be used unless repaired by a sling manufacturer or an equivalent entity.

(b) Each repaired sling shall be proof tested by the manufacturer or equivalent entity to twice the rated capacity prior to its return to service. The employer shall retain a certificate of the proof test and make it available for examination.

(c) Slings, including webbing and fittings, which have been repaired in a temporary manner shall not be used.

(9) Removal from service. Synthetic web slings shall be immediately removed from service if any of the following conditions are present:

(a) Acid or caustic burns;

(b) Melting or charring of any part of the sling surface;

(c) Snags, punctures, tears or cuts;

(d) Broken or worn stitches; or

(e) Distortion of fittings.

[Statutory Authority: RCW 49.17.040, 49.17.050 and 49.17.240. 81-18-029 (Order 81-21), § 296-78-760, filed 8/27/81.]

WAC 296-78-765 Floor operated cranes. (1) An unobstructed aisle not less than three feet wide shall be maintained for travel of the operator except in such cases where the control handles are hung from the trolleys of traveling cranes.

(2) The controller or controllers, if rope operated, shall automatically return to the "off" position when released by the operator.

(3) Pushbuttons, in pendant stations, shall return to the "off" position when pressure is released by the crane operator.

(4) All pushbuttons shall be marked to indicate their purpose.

[Statutory Authority: RCW 49.17.040, 49.17.050 and 49.17.240. 81-18-029 (Order 81-21), § 296-78-765, filed 8/27/81.]

WAC 296-78-770 Operators. (1) Cranes shall be operated only by regular crane operators, authorized substitutes who have had adequate experience and training under the supervision of a competent operator, or by crane repair person or inspectors.

(2) No person under the age of eighteen years shall be permitted to operate a crane.

(3) Operators shall be required to pass a practical examination limited to the specific type of equipment to be operated. Operators shall meet the following physical qualifications:

(a) Have vision of at least 20/30 Snellen in one eye, and 20/50 in the other, with or without corrective lenses.

(b) Be able to distinguish red, green, and yellow, regardless of position of colors, if color differentiation is required for operation.

(c) Hearing, with or without hearing aid, must be adequate for the specific operation.

(d) A history of epilepsy or an uncorrected disabling heart condition shall be cause for a doctor decision to determine qualifications to operate a crane.

(4) Hands shall be kept free when going up and down ladders. Articles which are too large to go into pockets or belts shall be lifted to or lowered from the crane by hand line. (Except where stairways are provided.)

(5) Cages shall be kept free of clothing and other personal belongings. Tools, extra fuses, oil cans, waste and other articles necessary in the crane cage shall be stored in a tool box and not left loose on or about the crane.

(6) The operator shall familiarize himself fully with all crane rules and with the crane mechanism and its proper care. If adjustments or repairs are necessary, he shall report the same at once to the proper authority.

(7) The operator shall not eat, smoke or read while actually engaged in the operation of the crane.

(8) The operator or someone especially designated shall lubricate all working parts of the crane.

(9) Cranes shall be examined for loose parts or defects each day on which they are in use.

(10) Sawdust, oil or other debris shall not be allowed to accumulate to create a fire, health or slipping hazard.

(11) Operators shall avoid, as far as possible, carrying loads over workers. Loads shall not be carried over employees without sounding an audible warning alarm.

(12) Whenever the operator finds the main or emergency switch open, he shall not close it, even when starting on regular duty, until he has made sure that no one is on or about the crane. He shall not oil or repair the crane unless the main switch is open.

(13) If the power goes off, the operator shall immediately throw all controllers to "off" position until the power is again available.

(14) Before closing the main switch the operator shall make sure that all controllers are in "off" position until the power is again available.

(15) The operator shall pay special attention to the block, when long hitches are made, to avoid tripping the limit switch.

(16) The operator shall recognize signals only from the person who is supervising the lift except for emergency stop signals. Operating signals shall follow established standard crane signals as illustrated in WAC 296-78-830 of this chapter. Whistle signals may be used where one crane only is in operation. Cranes shall have audible warning device which shall be sounded in event of emergency.

(17) Before starting to hoist, the operator shall place the trolley directly over the load to avoid swinging it when being hoisted.

(18) The operator shall not make side pulls with the crane except when especially instructed to do so by the proper authority.

(19) When handling maximum loads, the operator shall test the hoist brakes after the load has been lifted a few inches. If the brakes do not hold, the load shall be lowered at once and the brakes adjusted or repaired.

(20) Bumping into runway stops or other cranes shall be avoided. When the operator is ordered to engage with or push other cranes, he shall do so with special care for the safety of persons on or below cranes.

(21) When lowering a load, the operator shall proceed carefully and make sure that he has the load under safe control.

(22) When leaving the cage the operator shall throw all controllers to "off" position and open the main switch.

(23) If the crane is located out of doors the operator shall lock the crane in a secure position to prevent it from being blown along or off the track by a severe wind.

(24) Railroad cars shall not be pulled along the tracks with sidepulls on an overhead crane.

(25) Operators shall not move the crane or a load unless floor signals are clearly understood.

(26) The rated lifting capacity of a crane shall not be exceeded. If any doubt exists about the weight of a load which might exceed the rated capacity, the foreman in charge must be contacted before any attempt is made to lift the load. The foreman shall determine that the load is within the rated capacity of the crane or the load shall not be lifted.

(27) Crane operators and floorpersons shall coordinate their activities on every lift or movement of the crane. Both the operator and signalperson shall clearly understand any

problem a movement might create with regard to surrounding materials, structures, equipment or personnel.

[Statutory Authority: RCW 49.17.040, 49.17.050 and 49.17.240. 81-18-029 (Order 81-21), § 296-78-770, filed 8/27/81.]

WAC 296-78-775 Signalpersons. (1) Signalpersons shall give all the signals to the operator in accordance with established standard signals as illustrated in WAC 296-78-830 of this chapter.

(2) A designated person shall be responsible for the condition and use of all hoisting accessories and for all hitches.

(3) Before an operator moves a crane upon which an empty chain or cable sling is hanging, both ends of the sling shall be placed on the hook.

(4) Signalpersons, where necessary, shall walk ahead of the moving load and warn people to keep clear of it. They shall see that the load is carried high enough to clear all obstructions.

(5) Signalpersons shall notify the person in charge in advance when an extra heavy load is to be handled.

(6) No person shall be permitted to stand or pass under an electric magnet in use.

(7) The electrical circuit for electric magnets shall be maintained in good condition. Means for taking up the slack cable shall be provided.

[Statutory Authority: RCW 49.17.040, 49.17.050 and 49.17.240. 81-18-029 (Order 81-21), § 296-78-775, filed 8/27/81.]

WAC 296-78-780 Repairpersons. (1) When repairs are necessary, repairpersons shall have the crane run to a location where the repair work will least interfere with the other cranes and with operations on the floor.

(2) Before starting repairs, repairpersons shall see that all controllers are thrown to the "off" position, and that main or emergency switches are opened; one of these shall be locked out in compliance with WAC 296-78-715(11) of this chapter.

(3) Repairpersons shall immediately place warning signs or "Out of Order" signs on a crane to be repaired and also on the floor beneath or hanging from the crane so that it can easily be seen from the floor. If other cranes are operated on the same runway, repairpersons shall also place rail stops at a safe distance or make other safe provisions.

(4) When repairing runways, repairpersons shall place rail stops and warning signs or signals so as to protect both ends of the section to be repaired.

(5) Repairpersons shall take care to prevent loose parts from falling or being thrown upon the floor beneath.

(6) Repairs shall not be considered complete until all guards and safety devices have been put in place and the block and tackle and other loose material have been removed.

[Statutory Authority: RCW 49.17.040, 49.17.050 and 49.17.240. 81-18-029 (Order 81-21), § 296-78-780, filed 8/27/81.]

WAC 296-78-785 Construction requirements. (1) Calculations for wind pressure on outside overhead traveling cranes shall be based on not less than 30 pounds per square foot of exposed surface.

(2) No overhung gears shall be used unless provided with an effective means of keeping them in place, and keys shall be secured to prevent gears working loose.

Safety lugs or brackets shall be provided on the trolley frames and bridge ends of overhead traveling cranes, so that in the event of a broken axle or wheel the trolley or bridge proper will not have a drop greater than one inch.

(3) Where there are no members over an outside overhead crane suitable for attaching blocks for repair work, and a locomotive crane is not available, a structural steel outrigger of sufficient strength to lift the heaviest part of the trolley shall be provided.

(4) Outside overhead traveling cranes shall be equipped with wind indicators and rail clamps as required by the general safety and health standards, WAC 296-24-23503.

(5) Foot brakes, or other effective means shall be provided to control the bridge travel of all overhead traveling cranes.

[Statutory Authority: RCW 49.17.040, 49.17.050 and 49.17.240. 81-18-029 (Order 81-21), § 296-78-785, filed 8/27/81.]

WAC 296-78-790 Crane platforms and footwalks. (1) Platforms shall be provided when changing and repairing truck wheels on end trucks.

(2) A platform or footwalk shall be located on crane or crane runway to give access to the crane cage, and it shall be accessible from one or more stairways or fixed ladders. This platform or footwalk shall be not less than eighteen inches in width.

(3) Where stairways are used to give access to platforms they shall make an angle of not more than fifty degrees with the horizontal and shall be equipped with substantial railing. If ladders are used to give access to platforms they shall extend not less than thirty-six inches above the platform. Railed stairways or ladders to be used as a means of ingress and egress to crane cages shall be located at either or both ends.

(4) A footwalk shall be placed along the entire length of the bridge on the motor side, and a short platform twice the length of the trolley placed at one end of the girder on the opposite side, with a vertical clearance of a least six feet six inches where the design of crane or building permits, but in no case shall there be less than four feet clearance. For hand operated cranes the footwalk shall not be required to be installed on the bridge of the crane, but there shall be a repair platform equal in strength and design to that required for motor operated cranes, installed on the wall of the building or supported by the crane runway at a height equal to the lower edge of the bridge girder to facilitate necessary repairs.

(5) Clear width of footwalks shall not be less than eighteen inches except around the bridge motor where it may be reduced to fifteen inches.

(6) Footwalks shall be of substantial construction and rigidly braced. Footwalks for outside service shall be constructed so as to provide proper drainage, but the cracks between the boards shall not be wider than one-fourth inch.

(7) Every footwalk shall have a standard railing and toeboard at all exposed edges. Railings and toeboards shall conform in construction and design with the following requirements:

(a) Railings shall be not less than thirty-six inches nor more than forty-two inches in height, with an additional rail midway between the top rail and the floor.

(b) Pipe railings shall be not less than one and one-fourth inch inside diameter if of iron or be not less than one and one-half inches outside diameter if of brass tubing.

(c) Metal rails other than pipe shall be at least equal in strength to that of one and one-half by three-sixteenths inch angle and shall be supported by uprights of equal strength.

(d) Posts or uprights shall be spaced not more than eight feet center to center.

(e) Toeboards shall be not less than four inches in height.

(f) Toeboards shall be constructed in a permanent and substantial manner of metal, wood, or other material equivalent thereto in strength. Where of wood, toeboards shall be at least equal in cross section to one inch by four inches; where of steel at least one-eighth inch by four inches; where of other construction at least equal to the requirements for steel. Perforations up to one-half inch are permissible in metal toeboards.

(8) No openings shall be permitted between the bridge footwalk and the crane girders. Where wire mesh is used to fill this opening the mesh openings shall be not greater than one-half inch.

(9) All footwalks and platforms shall be so designed as to be capable of sustaining a concentrated load of one hundred pounds per lineal foot.

[Statutory Authority: RCW 49.17.040, 49.17.050 and 49.17.240. 81-18-029 (Order 81-21), § 296-78-790, filed 8/27/81.]

WAC 296-78-795 Crane cages. (1) Safe means of escape shall be provided for operators of all cranes in all operating locations. Rope ladders shall not be used as a regular means of access but may be installed as an emergency escape device to be used in the event of fire, mechanical breakdown or other emergency.

(2) The operator's cage shall be located at a place from which signals can be clearly distinguishable, and shall be securely fastened in a place and well braced to minimize vibration. It shall be large enough to allow ample room for the control equipment and the operator. The operator shall not be required to step over an open space of more than eighteen inches when entering the cage.

(3) Cab operated cranes shall be equipped with a portable fire extinguisher which meets the requirements of WAC 296-24-590 through 296-24-59007 and WAC 296-800-300.

(4) In establishments where continuous loud noises prevail such as caused by the operation of pneumatic tools, steam exhausts from boilers, etc., adequate signals shall be installed on cranes or one or more employees shall be placed on the floor for each crane operated to give warning to other employees of the approach of a crane with a load. Where there are more than two cranes on the same runway or within the same building structure, signaling devices are required to give warning to other employees of the approach of a crane with a load.

(5) Cages of cranes subjected to heat from below shall be of noncombustible construction and shall have a steel plate shield not less than one-eighth inch thick, placed not less than six inches below the bottom of the floor of the cage.

(6) Outside crane cages shall be enclosed. There shall be windows on three sides of the cage. The windows in the front and the side opposite the door shall be the full width of the cage.

(7) The floor of the cage on out-door cranes shall be extended to form an entrance landing which shall be equipped with a handrail and toeboard constructed to the specifications of WAC 296-78-790 of this chapter.

(8) A copy of the rules for operators shall be permanently posted in the cages of all cage-operated cranes.

[Statutory Authority: RCW 49.17.010, [49.17].040, and [49.17].050. 01-11-038, § 296-78-795, filed 5/9/01, effective 9/1/01. Statutory Authority: RCW 49.17.040, 49.17.050 and 49.17.240. 81-18-029 (Order 81-21), § 296-78-795, filed 8/27/81.]

WAC 296-78-800 Crane rail stops, bumpers and fenders. (1) Rail stops shall be provided at both ends of the crane runway and at ends of the crane bridge. When two trolleys are operated on the same bridge rails, bumpers shall be provided to prevent collision of trolleys.

(2) Bumpers and rail stops shall extend at least as high as the centers of the wheel.

(3) Rail stops shall be fastened to the girders or girders and rails, but not to the rails alone. This does not apply to portable rail stops. Portable rail stops shall not be used as permanent rail stops.

(4) Rail stops shall be built up of plates and angles or be made of cast steel.

(5) Fenders shall be installed which extend below the lowest point of the treads of gantry type crane wheels. They shall be of a shape and form that will tend to push or raise an employee's hand, arm or leg off the rail and away from the wheel.

[Statutory Authority: Chapter 49.17 RCW. 96-17-056, § 296-78-800, filed 8/20/96, effective 10/15/96. Statutory Authority: RCW 49.17.040, 49.17.050 and 49.17.240. 81-18-029 (Order 81-21), § 296-78-800, filed 8/27/81.]

WAC 296-78-805 Crawler locomotive and truck cranes. Crawler locomotive and truck cranes shall be constructed, maintained, inspected and operated in accordance with the provisions of WAC 296-24-240 through 296-24-24019 of the general safety and health standards.

[Statutory Authority: RCW 49.17.040, 49.17.050 and 49.17.240. 81-18-029 (Order 81-21), § 296-78-805, filed 8/27/81.]

WAC 296-78-810 Chain and electric hoists. (1) Chain and electric hoists shall be of what is known as "all steel construction." No cast iron shall be used in parts subject to tension except drums, bearings or brake shoes.

(2) The chains shall be made of the best quality steel or iron with welded links.

(3) Chain and electric hoists shall have a factor of safety of at least five.

(4) Chain and electric hoists shall be equipped with a device which will automatically lock the load when hoisting is stopped.

(5) Electric hoists shall be provided with a limit stop to prevent the hoist block from traveling too far in case the operating handle is not released in time.

(6) Workers shall not ride the load of any chain or electric hoist. If necessary to balance the load manually, it shall be done from a safe distance.

(7) The rated capacity of the hoist shall be posted on both the hoist and the jib or rail.

[Statutory Authority: RCW 49.17.040, 49.17.050 and 49.17.240. 81-18-029 (Order 81-21), § 296-78-810, filed 8/27/81.]

WAC 296-78-815 Monorail hoists. (1) No attempt shall be made with a monorail hoist to lift or move an object by a side pull, unless designed for that purpose.

(2) A stop shall be provided at all switches and turntables which will prevent the trolley from running off should the switch be turned or be left in the open position.

(3) All monorail hoists operating on swivels shall be equipped with one or more safety catches which will support the load should a suspension pin fail. All trolley frames shall be safeguarded against spreading.

(4) Rail stops shall be provided at the ends of crane runways. Such rail stops shall extend at least as high as the centers of the wheels.

(5) All monorail hoists shall have the rated capacity posted on both the hoist and the rail.

[Statutory Authority: RCW 49.17.040, 49.17.050 and 49.17.240. 81-18-029 (Order 81-21), § 296-78-815, filed 8/27/81.]

WAC 296-78-820 Air hoists. (1) To prevent piston rod lock nuts from becoming loose and allowing rod to drop when supporting a load, lock nut shall be secured to piston rod by a castellated nut and cotter-pin.

(2) A clevis, "D" strap or other means shall be used to prevent the hoist cylinder becoming detached from the hanger.

(3) All air hoists shall have their rated capacity posted on both the hoist and the jib or rail.

[Statutory Authority: RCW 49.17.040, 49.17.050 and 49.17.240. 81-18-029 (Order 81-21), § 296-78-820, filed 8/27/81.]

WAC 296-78-825 Jib, pillar, and portable floor cranes, crabs, and winches. (1) Side pulls shall not be made with jib or pillar cranes. The arm or boom shall be directly over the load when making a lift.

(2) The gears of all cranes shall be enclosed, and if hand operated by means of a crab or winch, a locking dog shall be provided to hold load when the handle is released.

(3) Some form of brake or safety lowering device shall be provided on all crabs, winches, and jib cranes.

(4) A hoist limiting device shall be provided on all jib cranes of ten or more tons capacity.

(5) The rated capacity of the hoisting device shall be posted on the hoist and the arm or boom.

[Statutory Authority: RCW 49.17.040, 49.17.050 and 49.17.240. 81-18-029 (Order 81-21), § 296-78-825, filed 8/27/81.]

WAC 296-78-830 Standard crane hand signals—Illustrations. (1) The following hand signals shall be used for crawler, locomotive, and truck cranes and a copy shall be posted in the cab at the operator's station.

CRAWLER, LOCOMOTIVE, AND TRUCK CRANES

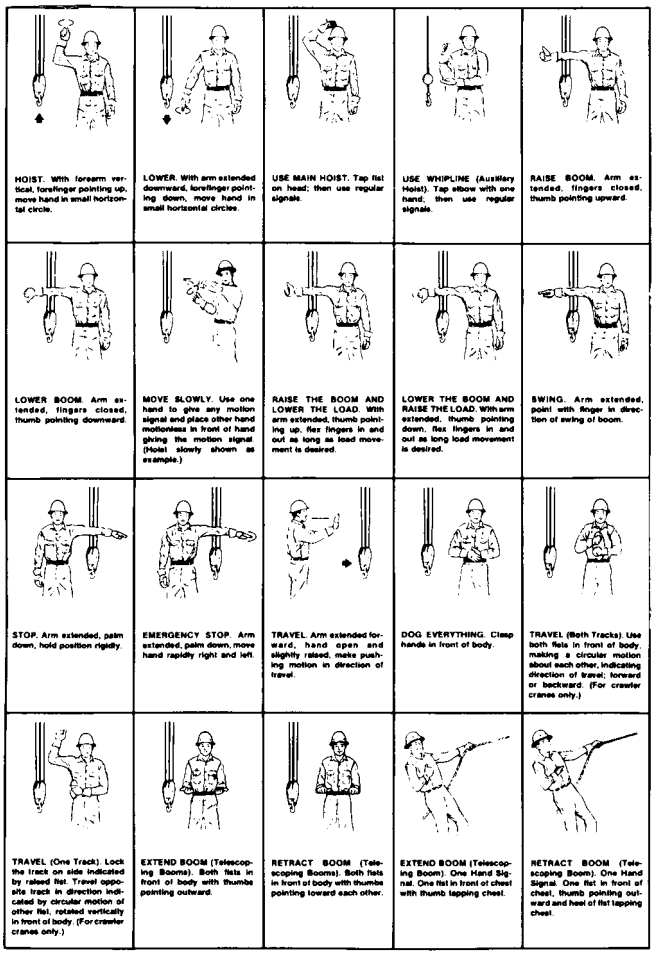

(2) The following hand signals shall be used for overhead and gantry cranes and a copy shall be posted in the cab at the operator's station.

STANDARD HAND SIGNALS FOR CONTROLLING OVERHEAD AND GANTRY CRANES

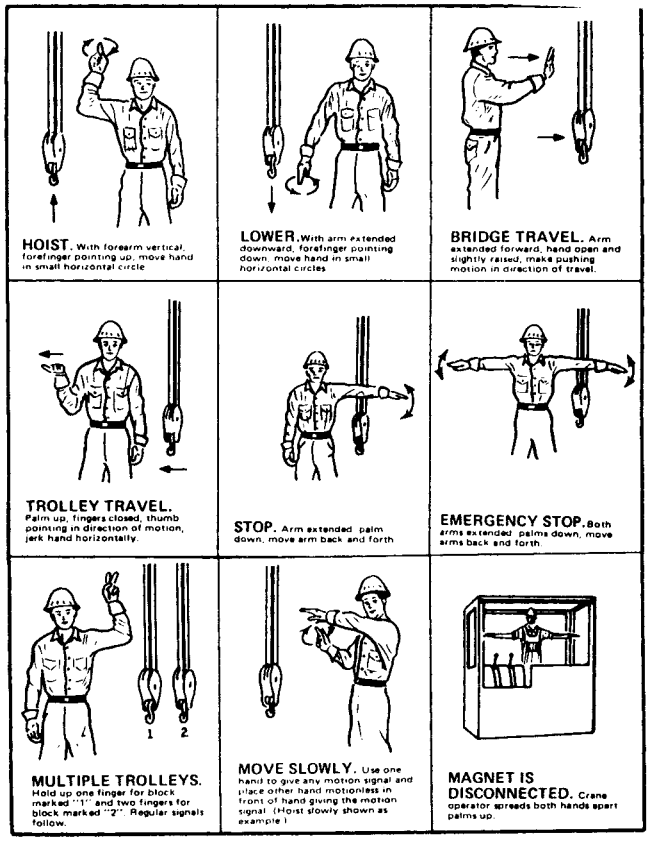

(3) The following hand signals shall be used for derricks and a copy shall be posted in the cab at the operator's station.

STANDARD HAND SIGNALS FOR CONTROLLING DERRICKS

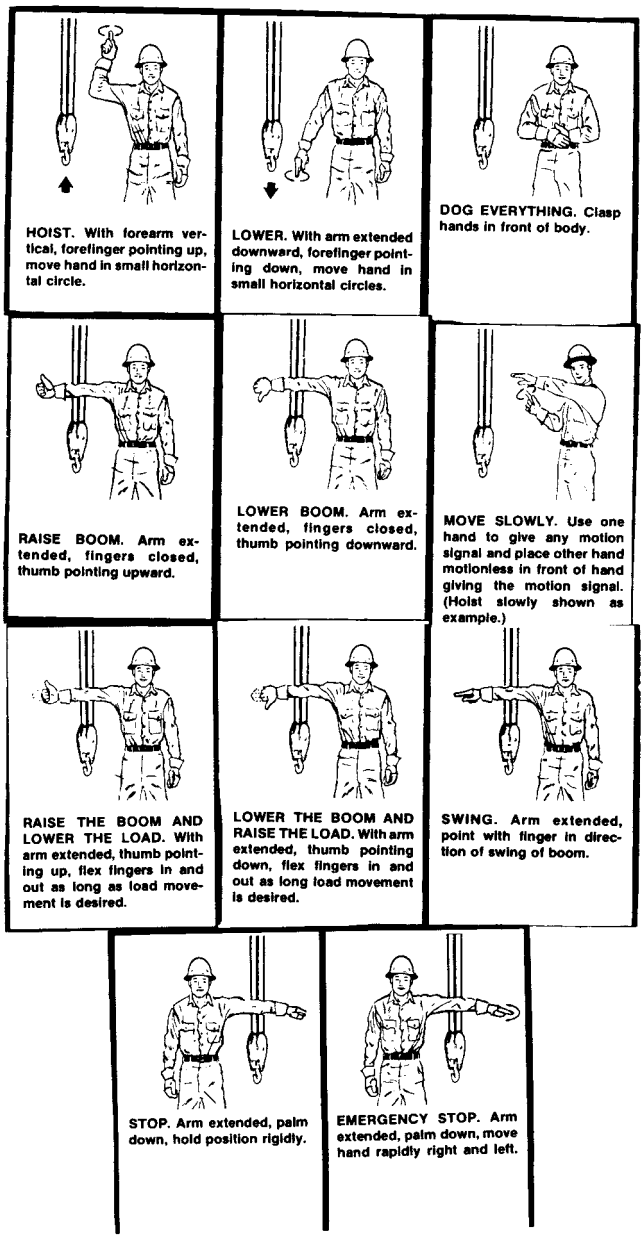

(4) The following hand signals shall be used for portal, tower, and pillar cranes and a copy shall be posted in the cab at the operator's station.

STANDARD HAND SIGNALS FOR CONTROLLING PORTAL, TOWER AND PILLAR CRANES

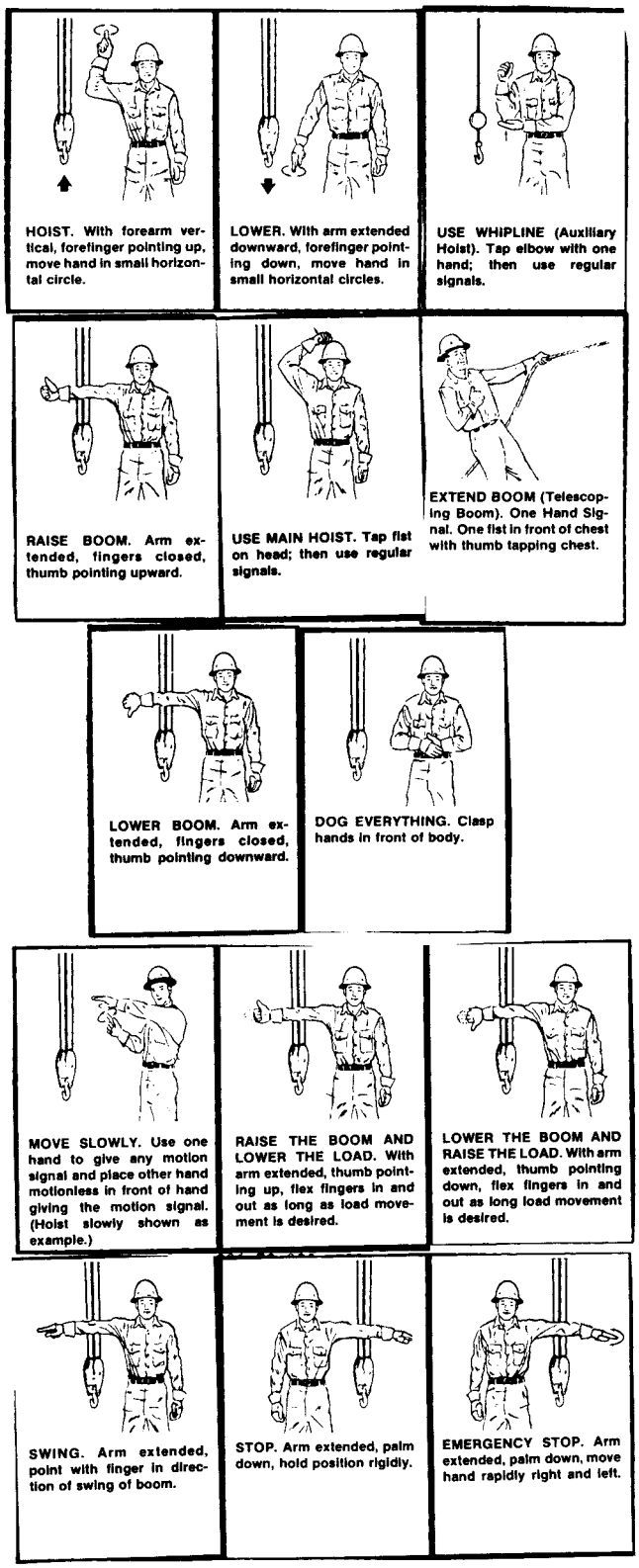

[Statutory Authority: RCW 49.17.040, 49.17.050 and 49.17.240. 81-18-029 (Order 81-21), § 296-78-830, filed 8/27/81.]

WAC 296-78-835 Vehicles. (1) Vehicles.

(a) Scope. Vehicles shall include all mobile equipment normally used in sawmill, planing mill, storage, shipping, and yard operations, including log sorting yards.

(b) Lift trucks. Lift truck shall be designed, constructed, maintained and operated in accordance with the requirements of WAC 296-24-230 through 296-24-23035 of the general safety and health standards.

(c) Carriers. Drive chains on lumber carriers shall be adequately guarded to prevent contact at the pinch points.

(d)(i) Lumber carriers shall be so designed and constructed that the operator's field of vision shall not be unnecessarily restricted.

(ii) Carriers shall be provided with ladders or equivalent means of access to the operator's platform or cab.

(e) Lumber hauling trucks.

(i) On trucks where the normal operating position is ahead of the load in the direction of travel, the cab shall be protected by a barrier at least as high as the cab. The barrier shall be capable of stopping the weight of the load capacity of the vehicle if the vehicle were to be stopped suddenly while traveling at its normal operating speed. The barrier shall be constructed in such a manner that individual pieces of a normal load will not go through openings in the barrier.

(ii) Stakes, stake pockets, racks, tighteners, and binders shall provide a positive means to secure the load against any movement during transit.

(iii) Where rollers are used, at least two shall be equipped with locks which shall be locked when supporting loads during transit.

(2) Warning signals and spark arrestors. All vehicles shall be equipped with audible warning signals and where practicable shall have spark arrestors.

(3) Flywheels, gears, sprockets and chains and other exposed parts that constitute a hazard to workers shall be enclosed in standard guards.

(4) All vehicles operated after dark or in any area of reduced visibility shall be equipped with head lights and backup lights which adequately illuminate the direction of travel for the normal operating speed of the vehicle. The vehicle shall also be equipped with tail lights which are visible enough to give sufficient warning to surrounding traffic at the normal traffic operating speed.

(5) All vehicles operated in areas where overhead hazards exist shall be equipped with an overhead guard for the protection of the operator.

(6) Where vehicles are so constructed and operated that there is a possibility of the operator being injured by backing into objects, a platform guard shall be provided and so arranged as not to hinder the exit of the driver.

(7) Trucks, lift trucks and carriers shall not be operated at excessive rates of speed. When operating on tramways or docks more than six feet above the ground or lower level they shall be limited to a speed of not more than twelve miles per hour. When approaching blind corners they shall be limited to four miles per hour.

(8) Vehicles shall not be routed across principal thoroughfares while employees are going to or from work unless pedestrian lanes are provided.

(a) Railroad tracks and other hazardous crossings shall be plainly posted and traffic control devices (American

National Standard D8.1 - 1967 for Railroad-Highway Grade Crossing Protection) should be utilized.

(b) Restricted overhead clearance. All areas of restricted side or overhead clearance shall be plainly marked.

(c) Pickup and unloading points. Pickup and unloading points and paths for lumber packages on conveyors and transfers and other areas where accurate spotting is required, shall be plainly marked and wheel stops provided where necessary.

(d) Aisles, passageways, and roadways. Aisles, passageways, and roadways shall be sufficiently wide to provide safe side clearance. One-way aisles may be used for two-way traffic if suitable turnouts are provided.

(9) Where an operator's vision is impaired by the vehicle or load it is carrying, he shall move only on signal from someone so stationed as to have a clear view in the direction the vehicle is to travel.

(10) Lift trucks shall be equipped, maintained and operated in compliance with the requirements of the general safety and health standard, WAC 296-24-230 through 296-24-23035.

(11) Load limits. No vehicle shall be operated with loads exceeding its safe load capacity.

(12) Vehicles with internal combustion engines shall not be operated in enclosed buildings or buildings with ceilings less than sixteen feet high unless the buildings have ventilation adequate to maintain air quality as required by the general occupational health standard, chapter 296-62 WAC.

(13) Vehicles shall not be refueled while motor is running. Smoking or open flames shall not be allowed in the refueling area.

(14) No employee other than trained operators or mechanics shall start the motor of, or operate any log or lumber handling vehicle.

(15) All vehicles shall be equipped with brakes capable of holding and controlling the vehicle and capacity load upon any grade or incline over which they may operate.

(16) Unloading equipment and facilities.

(a) Machines used for hoisting, unloading, or lowering logs shall be equipped with brakes capable of controlling or holding the maximum load in midair.

(b) The lifting cylinders of all hydraulically operated log handling machines, or where the load is lifted by wire rope, shall be equipped with a positive device for preventing the uncontrolled lowering of the load or forks in case of a failure in the hydraulic system.

(c) A limit switch shall be installed on powered log handling machines to prevent the lift arms from traveling too far in the event the control switch is not released in time.

(d) When forklift-type machines are used to load trailers, a means of securing the loading attachment to the fork shall be installed and used.

(e) A-frames and similar log unloading devices shall have adequate height to provide safe clearance for swinging loads and to provide for adequate crotch lines and spreader bar devices.

(f) Log handling machines used to stack logs or lift loads above operator's head shall be equipped with overhead protection.

(g) Unloading devices shall be equipped with a horn or other plainly audible signaling device.

(h) Movement of unloading equipment shall be coordinated by audible or hand signals when operator's vision is impaired or operating in the vicinity of other employees.

Lift trucks regularly used for transporting peeler blocks or cores shall have tusks or a similar type hold down device to prevent the blocks or cores from rolling off the forks.

(17) Where spinners are used on steering wheels, they shall be of the automatic retracting type or shall be built into the wheel in such a manner as not to extend above the plane surface of the wheel. Vehicles equipped with positive anti-kickback steering are exempted from this requirement.

(18) Mechanical stackers and unstackers shall have all gears, sprockets and chains exposed to the contact of workers, fully enclosed by guards as required by WAC 296-78-710 of this chapter.

(19) Manually operated control switches shall be properly identified and so located as to be readily accessible to the operator. Main control switches shall be so designed that they can be locked in the open position.

(20) Employees shall not stand or walk under loads being lifted or moved. Means shall be provided to positively block the hoisting platform when employees must go beneath the stacker or unstacker hoist.

(21) No person shall ride any lift truck or lumber carrier unless a suitable seat is provided, except for training purposes.

(22) Unstacking machines shall be provided with a stopping device which shall at all times be accessible to at least one employee working on the machine.

(23) Floor of unstacker shall be kept free of broken stickers and other debris. A bin or frame shall be provided to allow for an orderly storage of stickers.

(24) Drags or other approved devices shall be provided to prevent lumber from running down on graders.

(25) Liquified petroleum gas storage and handling. Storage and handling of liquified petroleum gas shall be in accordance with the requirements of WAC 296-24-475 through 296-24-47517 of the general safety and health standards.

(26) Flammable liquids. Flammable liquids shall be stored and handled in accordance with WAC 296-24-330 through 296-24-33019 of the general safety and health standards.

(27) Guarding side openings. The hoistway side openings at the top level of the stacker and unstacker shall be protected by enclosures of standard railings.

(28) Guarding hoistway openings. When the hoist platform or top of the load is below the working platform, the hoistway openings shall be guarded.

(29) Guarding lower landing area. The lower landing area of stackers and unstackers shall be guarded by enclosures that prevent entrance to the area or pit below the hoist platform. Entrances should be protected by electrically interlocked gates which, when open, will disconnect the power and set the hoist brakes. When the interlock is not installed, other positive means of protecting the entrance shall be provided.

(30) Lumber lifting devices. Lumber lifting devices on all stackers shall be designed and arranged so as to minimize the possibility of lumber falling from such devices.

(31) Inspection. At the start of each work shift, equipment operators shall inspect the equipment they will use for

evidence of failure or incipient failure. Equipment found to have defects which might affect the operating safety shall not be used until the defects are corrected.

(32) Cleaning pits. Safe means of entrance and exit shall be provided to permit cleaning of pits.

(33) Preventing entry to hazardous area. Where the return of trucks from unstacker to stacker is by mechanical power or gravity, adequate signs, warning devices, or barriers shall be erected to prevent entry into the hazardous area.

[Statutory Authority: RCW 49.17.010, 49.17.040, 49.17.050, and 49.17.060. 03-06-076, § 296-78-835, filed 3/4/03, effective 8/1/03. Statutory Authority: Chapter 49.17 RCW. 96-17-056, § 296-78-835, filed 8/20/96, effective 10/15/96. Statutory Authority: RCW 49.17.040, 49.17.050 and 49.17.240. 81-18-029 (Order 81-21), § 296-78-835, filed 8/27/81.]

WAC 296-78-840 Loading, piling, storage and conveying.

[Statutory Authority: RCW 49.17.040, 49.17.050 and 49.17.240. 81-18-029 (Order 81-21), § 296-78-840, filed 8/27/81.]

WAC 296-78-84001 Loading, piling, storage and conveying—General. (1) Units or loads of lumber built up for transportation by overhead cranes, lift trucks, auto trucks, or manually or mechanically operated transfers shall be provided with at least one set of stickers for each eighteen inches in height of unit or load. One set of stickers shall be not more than six inches from the top of units of lumber up to three inch dimension. Where dimension of material is greater than three inches, a set of stickers shall be placed under the top layer. Stickers shall extend the full width of the package, shall be uniformly spaced, and shall be aligned one above the other. Stickers may be lapped with a minimum overlapping of twelve inches. Stickers shall not protrude more than two inches beyond the sides of the package.

(2) Lumber loading. Loads shall be built and secured to insure stability in transit.

(3) Units or loads of lumber shall not be lifted or moved until all workers are in the clear.

(4) Gradient of roll sets or roll cases over which units of lumber are to be moved shall not exceed three percent. The movement of units shall be under control at all times.

(5) Stacking of lumber in yards, either by units or in block piles, shall be conducted in a safe and orderly manner.

(6) Foundations for piling lumber in yards shall be capable of supporting the maximum applied load without tipping or sagging.

(7) The height of stacked units in storage areas shall not exceed seven of the usual four foot units, subject to the following qualifications:

(a) Units of lumber shall not be stacked more than four high unless two or more stacks of units are tied together with ties.

(b) Long units of lumber shall not be stacked upon shorter packages except where a stable pile can be made with the use of package separators.

(c) In unit package piles, substantial polsters or unit separators shall be placed between each package directly over the stickers.

(8) Wooden horses used for loading preformed loads of lumber shall be of material not less than four by six inches in cross section net measure.

(9) Unstable piles. Piles of lumber which have become unstable shall be immediately made stable or removed.

(10) Lift boards or pallets shall be loaded in such a manner as to prevent material from spilling or the material shall be secured with a binder.

(11) Packing rooms shall be kept free of debris and chutes shall be equipped with a means of slowing down the materials.

(12) Sorting chains shall be provided with a stopping device which shall at all times be readily accessible to at least one employee working on the chain.

(13) The inside of the walkway of all green chains and sorting tables shall be provided with a standard toeboard.

(14) Rollers or other devices shall be provided for removing heavy dimension lumber from the cabin or table.

(15) Roll casings and transfer tables shall be cleaned regularly and shall be kept reasonably free from debris.

(16) In all permanent installations, green chains and sorting tables shall be roofed over to provide protection from inclement weather. Normal work stations shall be provided with a drained work surface which is evenly floored of nonslip material.

(17) Power driven rolls shall be operated in a manner to prevent end collisions.

(18) The space between live rolls shall be filled in on either side of crosswalks with material of structural strength to withstand the load imposed with a four to one safety factor.

(19) The driving mechanism of live rolls shall be guarded wherever exposed to contact.

(20) Live rolls shall be replaced when their surface develops a break or hole.

(21) Guarding. Spiked live rolls shall be guarded.

(22) Ramps or skidways used to transfer lumber or materials from one level to another shall be provided with all safeguards necessary for the protection of workers.

(23) Landings on a lower level where lumber or timbers are discharged over ramps or skidways shall be provided with a solid bumper not less than six inches in height at the outer edge. Such landing shall be maintained in good repair at all times.

(24) Ramps or skidways shall be so arranged that the person putting lumber down shall have a clear view of the lower landing. Lumber or timbers shall not be put down until all workers are in the clear.

(25)(a) The under face of all ramp or skidway landings shall be fenced off or other positive means provided to prevent persons from walking out under dropping timber.

(b) Return strands of sorting table ramp chains shall be supported by troughs of sufficient strength to support the weight of a broken chain.

[Statutory Authority: RCW 49.17.040, 49.17.050 and 49.17.240. 81-18-029 (Order 81-21), § 296-78-84001, filed 8/27/81.]

WAC 296-78-84003 Conveyors. (1) Construction, operation, and maintenance of conveyors shall be in accordance with American National Standard B20.1 - 1957, Safety Code for Conveyors, Cableways and related equipment.

(2) Conveyor troughs in which the working strands of a conveyor operate shall be of ample dimension and strength to carry a broken chain and shall afford effective protection to all employees.

(3) When the return strand of a conveyor operates within seven feet of the floor there shall be a trough provided of sufficient strength to carry the weight resulting from a broken chain.

(4) When the return strands of a conveyor pass over passageways or work areas such guards shall be placed under them as will effectively protect workers.

(5) When the working strand of a conveyor crosses within three feet of the floor level in passageways, the trough in which it works shall be bridged the full width of the passageway.

(6) Where conveyor, idler pulleys or other equipment is located over or dangerously near burning refuse, any worker going to such location shall use a safety line which shall be securely fastened to his body and tended by a helper.

(7) Conveyors shall be provided with an emergency panic-type stopping device which can be reached by a person in a sitting position on the conveyor. Such device shall be located near the material entrance to each barker, chipper, hog, saw, or similar type of equipment except where the conveyor leading into such equipment is under constant control of an operator who has full view of the material entrance and is located or restrained where he/she cannot possibly fall onto the conveyor. The device shall stop the conveyor a sufficient distance away from the hazard to prevent injury or further injury by the hazard.

(8) Screw or auger type conveyor troughs and boxes shall be equipped with covers. If it is not practical to cover the troughs or boxes, other equivalent type guards shall be provided.

[Statutory Authority: RCW 49.17.040, 49.17.050 and 49.17.240. 81-18-029 (Order 81-21), § 296-78-84003, filed 8/27/81.]

WAC 296-78-84005 Dry kilns. (1) Transfer, kiln and dolly tracks shall be properly maintained at all times and shall have a grade of not more than one and one-fourth percent. Bumpers or stops shall be installed at the ends of all tracks capable of stopping a normal load for which the track is installed. A means shall be provided for chocking or blocking cars.

(2) Doors.

(a) Main kiln doors. Main kiln doors shall be provided with a method of holding them open while kiln is being loaded.

(b) Counterweights on vertical lift doors shall be boxed or otherwise guarded.

(c) Means shall be provided to firmly secure main doors, when they are disengaged from carriers and hangers, to prevent toppling.

(3) Kilns whose operation requires inside inspection shall be maintained with not less than eighteen inches clearance between loaded cars and the walls of the kiln. The requirements for personal protective equipment specified in WAC 296-800-160, safety and health core rules, and chapter 296-62 WAC, Part E, general occupational health standards, shall be complied with.

(4) Kiln loads shall be equipped or arranged for easy attachment and detachment of transfer cables. Means for stopping kiln cars shall be available at all times.

(5) Cars shall not be moved until tracks are clear and workers are out of the bight of transfer lines.

(6) When kiln or dolly loads of lumber are permitted to coast through or adjacent to any work area, audible warning shall be given.

(7) Stickers shall not be allowed to protrude more than two inches from the sides of kiln stacks.

(8) Yards and storage areas shall be kept reasonably free of debris and unnecessary obstruction. Warning signs shall be conspicuously posted wherever there is danger from moving vehicles or equipment.

[Statutory Authority: RCW 49.17.010, [49.17].040, and [49.17].050. 01-11-038, § 296-78-84005, filed 5/9/01, effective 9/1/01. Statutory Authority: Chapter 49.17 RCW. 96-17-056, § 296-78-84005, filed 8/20/96, effective 10/15/96; 94-20-057 (Order 94-16), § 296-78-84005, filed 9/30/94, effective 11/20/94. Statutory Authority: RCW 49.17.040, 49.17.050 and 49.17.240. 81-18-029 (Order 81-21), § 296-78-84005, filed 8/27/81.]

WAC 296-78-84007 Chippers and hogs. (1) Chippers. The feed system to the chipper shall be arranged so the operator does not stand in direct line with the chipper spout (hopper). The chipper spout shall be enclosed to a height or distance of not less than forty inches from the floor or the operator's station. A safety belt and lifeline shall be worn by workers when working at or near the spout unless the spout is guarded. The lifeline shall be short enough to prevent workers from falling into the chipper.

(2) Hog mills shall be provided with feed chutes so designed and arranged that from no position on the rim of the chute shall the distance to the knives or feed roll be less than forty inches. Baffles shall be provided which shall effectively prevent material from being thrown from the mill.

(3) Employees feeding hog mills shall be provided with safety belts and lines, which they shall be required to use at all times, unless otherwise protected from any possibility of falling into the mill.

[Statutory Authority: Chapter 49.17 RCW. 96-17-056, § 296-78-84007, filed 8/20/96, effective 10/15/96. Statutory Authority: RCW 49.17.040, 49.17.050 and 49.17.240. 81-18-029 (Order 81-21), § 296-78-84007, filed 8/27/81.]

WAC 296-78-84009 Bins and bunkers. (1) Bins, bunkers, hoppers, and fuel houses. Guarding. Open bins, bunkers, and hoppers whose upper edges extend less than three feet above working level shall be equipped with standard handrails and toeboards, or have their tops covered by a substantial grill or grating with openings small enough to prevent a person from falling through.

(2) Fuel hoppers shall be provided with doors that may be remotely operated.

(3) Fuel hoppers shall be provided with platforms with standard railings and adequately lighted for the protection of workers taking out fuel.

(4)(a) Fuel bins shall be provided with an approved railed platform or walkway near the top or other approved means, for the use of employees engaged in dislodging congested fuel. No employee shall enter any fuel bin except where adequately safeguarded.

(b) Recognizing however, the varying designs of fuel storage vaults and the type of fuel handled and certain peculiar local conditions, the adequacy of safety devices shall be determined by a duly authorized representative of the department of labor and industries, division of industrial safety and health.

(c) During operations when the flow of normal fuel is interrupted but dust from operating sanders is received in the bin, workers shall not enter the fuel bin until the flow of sander dust has been discontinued and the dust has settled.

(d) Use of wheeled equipment to load bins. Where automotive or other wheeled equipment is used to move materials into bins, bunkers, and hoppers, adequate guard rails shall be installed along each side of the runway, and a substantial bumper stop provided when necessary.

[Statutory Authority: RCW 49.17.040, 49.17.050 and 49.17.240. 81-18-029 (Order 81-21), § 296-78-84009, filed 8/27/81.]

WAC 296-78-84011 Burners. (1) Burners and smoke stacks other than the self-supporting type shall be adequately guyed. Buckle guys shall be installed if burner or stack is more than fifty feet in height.

(2) Runway. The conveyor runway to the burner shall be equipped with a standard handrail. If the runway crosses a roadway or thoroughfare, standard toeboards shall be provided in addition.

[Statutory Authority: RCW 49.17.040, 49.17.050 and 49.17.240. 81-18-029 (Order 81-21), § 296-78-84011, filed 8/27/81.]

Chapter 296-79 WAC

SAFETY STANDARDS FOR PULP, PAPER, AND PAPERBOARD MILLS AND CONVERTERS

WAC

296-79-010	Scope and application.
296-79-011	Definitions.
296-79-020	General requirements.
296-79-030	Guards and guarding.
296-79-040	Fire protection, ignition sources and means of egress.
296-79-050	Personal protection clothing and equipment.
296-79-070	Illumination.
296-79-080	Elevators, manlifts and other lifting devices.
296-79-090	Electrical equipment and distribution.
296-79-100	Floors, platforms, stairways, ladders, loading docks.
296-79-110	Elevated runways and ramps used by vehicles.
296-79-120	Scaffolds, construction, use and maintenance.
296-79-130	Crossovers, aisles, passages.
296-79-140	Installation, inspection, and maintenance of pipes, piping systems, and hoses.
296-79-150	Powered industrial trucks and other equipment.
296-79-160	Requirements for cranes and hoists—See general safety and health standards (chapter 296-24 WAC, Part D).
296-79-170	Requirements for crawler and truck cranes.
296-79-180	Privately owned standard gauge railroad operations.
296-79-190	Loading and unloading materials from railway cars or trucks.
296-79-200	Bridge and dock plates.
296-79-210	For conveyors, maintenance and inspection.
296-79-220	Deactivating and lockout requirements.
296-79-230	Confined spaces.
296-79-240	Storage of fuel, oil, flammables and chemicals.
296-79-250	Safety procedure for handling sulfur.
296-79-260	Pulpwood storage and handling.
296-79-270	Pulpwood preparation.
296-79-27003	Log hauls, slips, and carriages.
296-79-27005	Band saws.
296-79-27007	Circular saws speeds and repairs.
296-79-27009	Slasher saws-tables.
296-79-27011	Circular swing saws.
296-79-27013	Drag saws—Fixed chain saws—Circular cut-off saws.
296-79-27015	Construction and use of pulpwood splitters.
296-79-280	Chip and hog fuel storage.
296-79-290	Stock preparation and reprocessing.
296-79-29001	Digester valves and piping.
296-79-29003	Warning of digester being blown.
296-79-29005	Unplugging quick lime stoppages.
296-79-29007	Bleach plant.
296-79-29009	Audible alarm in bleach plant.
296-79-29011	Pocket grinder doors.
296-79-29013	Pulping device procedures.
296-79-29015	Off machine repulping devices.
296-79-29017	Pulping device cleaning, inspection and repairing.
296-79-29021	Shredders and blowers.
296-79-29023	Clearing shredder jams.
296-79-29027	Guillotine type roll splitters.
296-79-29029	Broke hole.
296-79-29031	Industrial kiln guns and ammunition.
296-79-29033	Chlorine dioxide system.
296-79-29035	Piling and unpiling pulp.
296-79-29037	Chocking rolls.
296-79-300	Machine room equipment and procedures.
296-79-310	Converting operations (bag and container manufacturing, printing, coating, finishing and related processes).
296-79-31001	General requirements for converting operations (bag and container manufacturing, printing, coating, finishing and related processes).
296-79-31003	Corrugator.
296-79-31009	Die cutting.
296-79-320	Sulfite recovery furnace area requirements.

DISPOSITION OF SECTIONS FORMERLY CODIFIED IN THIS CHAPTER

296-79-060	Protection from radiation. [Order 74-24, § 296-79-060, filed 5/6/74; Order 70-6, § 296-79-060, filed 7/10/70, effective 8/10/70.] Repealed by 99-16-083, filed 8/3/99, effective 11/3/99. Statutory Authority: RCW 49.17.010, [49.17].040 and [49.17].050.
296-79-255	Safety procedure for handling liquid sulfur. [Order 74-24, § 296-79-255, filed 5/6/74.] Repealed by 99-16-083, filed 8/3/99, effective 11/3/99. Statutory Authority: RCW 49.17.010, [49.17].040 and [49.17].050.
296-79-27001	Barkers, chippers, and hog feed devices. [Order 74-24, § 296-79-27001, filed 5/6/74.] Repealed by 99-16-083, filed 8/3/99, effective 11/3/99. Statutory Authority: RCW 49.17.010, [49.17].040 and [49.17].050.
296-79-29019	Guarding hand knives and sharpening steels. [Order 74-24, § 296-79-29019, filed 5/6/74.] Repealed by 99-16-083, filed 8/3/99, effective 11/3/99. Statutory Authority: RCW 49.17.010, [49.17].040 and [49.17].050.
296-79-29025	Repairing shredders. [Order 74-24, § 296-79-29025, filed 5/6/74.] Repealed by 99-16-083, filed 8/3/99, effective 11/3/99. Statutory Authority: RCW 49.17.010, [49.17].040 and [49.17].050.
296-79-31005	Adhesive system. [Order 74-24, § 296-79-31005, filed 5/6/74.] Repealed by 99-16-083, filed 8/3/99, effective 11/3/99. Statutory Authority: RCW 49.17.010, [49.17].040 and [49.17].050.
296-79-31007	Printing and cutting. [Order 74-24, § 296-79-31007, filed 5/6/74.] Repealed by 99-16-083, filed 8/3/99, effective 11/3/99. Statutory Authority: RCW 49.17.010, [49.17].040 and [49.17].050.
296-79-31011	Power lifts on gluers, tapers and stitchers. [Order 74-24, § 296-79-31011, filed 5/6/74.] Repealed by 99-16-083, filed 8/3/99, effective 11/3/99. Statutory Authority: RCW 49.17.010, [49.17].040 and [49.17].050.
296-79-31013	Strapping-banding operations. [Order 74-24, § 296-79-31013, filed 5/6/74.] Repealed by 99-16-083, filed 8/3/99, effective 11/3/99. Statutory Authority: RCW 49.17.010, [49.17].040 and [49.17].050.

WAC 296-79-010 Scope and application. (1) This chapter applies to establishments, firms, persons and corporations that manufacture, process, store, finish, or convert pulp, paper or paperboard and includes all buildings, machinery, and equipment.

(2) This chapter shall augment the Washington state general safety and health standards (chapter 296-24 WAC), general occupational health standards (chapter 296-62 WAC), and safety and health core rules (chapter 296-800 WAC). In the event of any conflict between any portion of this chapter and any portion of any of the general application standards, the provisions of this chapter 296-79 WAC, shall prevail.

(3) The rules contained in this chapter are minimum requirements and the use of additional guards, or other

means, methods or procedures may be needed to make the work or place of work safe.

[Statutory Authority: RCW 49.17.010, [49.17].040, and [49.17].050. 01-11-038, § 296-79-010, filed 5/9/01, effective 9/1/01; 99-16-083, § 296-79-010, filed 8/3/99, effective 11/3/99; Order 74-24, § 296-79-010, filed 5/6/74; Order 70-6, § 296-79-010, filed 7/10/70, effective 8/10/70.]

WAC 296-79-011 Definitions. "Authorized" - One who is qualified by reason of training and to whom the responsibility to perform a specific assignment has been given by the employer.

"Guarded" - The means to remove the likelihood of approach or contact by persons or objects to a point of danger.

"Knowledgeable" - The demonstrated ability to communicate the safe work practices required to perform a job or task correctly.

"Qualified" - One who is familiar with the construction and operation of the equipment and the duties of the position they may be filling. This includes being aware of the hazards of the job and the means and procedures necessary to eliminate or control those hazards.

"Training" - The procedure that must establish and document the employee's competency in the work practices that they are required to perform.

"Shall" or "must" as used in this standard mean the requirement is compulsory.

"May" or "should" as used in this standard identify recommendations or suggestions only.

[Statutory Authority: RCW 49.17.010, [49.17].040 and [49.17].050. 99-16-083, § 296-79-011, filed 8/3/99, effective 11/3/99.]

WAC 296-79-020 General requirements. (1) Housekeeping.

(a) Floors must be kept reasonably clear of spilled or leaking oil, grease, water, broke, etc., that may cause slipping, tripping or falling. Nonskid type surfacing must be installed in vehicular or pedestrian traffic areas where slipping hazards otherwise would exist.

In areas where it is not possible to keep the floor free of materials which cause a slipping hazard, mats, cleats, or other suitable materials which will effectively minimize or eliminate the hazard must be installed.

(b) Hoses, cords, slings or similar items or equipment must be stored in such a manner that they will not create a hazard.

(2) Storage and transportation of materials. Materials, objects or equipment must be stored or transported by methods which will prevent them from falling, tipping or rolling.

(3) Warning of open manholes or excavations. Open manholes or excavations must be:

• Roped off, barricaded, or adequately safeguarded when located in or adjacent to walkways, aisleways, or roadways.

• Provided with warning lights or lanterns during periods of darkness or reduced visibility.

(4) Training. Employees must receive proper instruction and be familiar with safe operating procedures:

(a) Before they supervise the operation, or make adjustments to any machine or equipment.

(b) To be able to cope with emergencies arising from breaks, ruptures, or spills which would create a hazardous condition.

(c) For lifting and moving objects. Mechanical devices should be used or employees should ask for assistance in lifting or moving heavy objects.

(d) On prompt reporting of any faulty equipment or hazardous condition to the person in charge.

(5) Working alone. When an employee is assigned to work alone in a remote or isolated area, procedures must be developed to ensure:

• That the employee reports by use of radio or telephone to someone periodically; or

• At reasonable intervals a designated person must check on the employee; and

• All persons involved in working alone are advised of the procedures to be followed.

(6) Exits from hazardous areas. Where physically and reasonably possible, there must be at least two unobstructed exits from any hazardous area. Such exits should be on opposite walls.

(7) Safe work area. Sufficient clearance must be maintained between machines to allow employees a safe work area.

(8) Protection from overhead hazard. Warning signs/devices must be:

• Placed in conspicuous locations below areas where overhead work is being done and

• Removed promptly when work is completed and the overhead hazard no longer exists.

(9) Welding areas protected.

(a) Areas in which welding is being done must be screened or barricaded to protect persons from flash burns, when practical.

(b) If the welding process cannot be isolated, all persons who may be exposed to the hazard of arc flash must be properly protected.

(10) Testing safety devices. Brakes, back stops, anti-runaway devices, overload releases, emergency stops, and other safety devices must be inspected and tested frequently to ensure that all are operative and maintained in good repair.

(11) Starting and stopping devices.

• Electrically or manually operated power starting or stopping devices must be provided within easy reach of the operator from the normal operating position.

• If necessary for safety of the operation, the machine must be so equipped that retarding or braking action can be applied at the time of or after the source of power is deactivated.

(12) Interlocks:

Interlocks that affect the safety of employees must not be bypassed except where the employer demonstrates that alternate procedures or devices provide a level of safety for employees equivalent to that provided by the safety interlock. Interlocks are considered to be bypassed anytime the designed control strategy is bypassed by means including, but not limited to, a temporary wiring change, physical interference or a temporary software change of "force."

Prior to bypassing a safety interlock the employer must:

• Develop a written procedure detailing how the bypass will be accomplished and the alternate means of protecting employees.

• Inform affected employees of all pertinent information including at a minimum the reason for the change, the date of the change, who is responsible for the change, and approximately how long the change will be in effect.

• Post appropriate warning of the change on the equipment or area.

(13) Designing control systems. Employers must ensure that all control systems are designed to:

• Ensure that the system does not create an unsafe state that endangers personnel.

• Ensure that when control systems fail, the equipment being controlled fails to a safe state.

• Have an independent method to safely stop the process or equipment, such as a hardwired emergency stop button or other controls that deenergize the system, or independent methods to force the system to a safe state.

(14) Compressed air.

(a) Compressed air must not be used for cleaning clothing that is being worn, or if it will endanger persons in the area.

(b) Sections of high pressure air hoses must be properly coupled and have safety chains or equivalent safety device attached between the sections (30 psi or more is high pressure air).

(15) Punch bars. Open pipes must not be used as punch bars if the use would create a hazard.

(16) Saw table limit stop or extension. Employees must be protected from contact with the front edge of a circular saw by:

• A limit stop which will prevent the forward swing of the cutting edge from extending beyond the edge of the table or

• Installation of a table extension.

(17) Powder-actuated tools.

• Powder-actuated tool design, construction, operation and use shall comply with all requirements specified in "safety requirements for powder actuated fastening systems," (see chapter 296-24 WAC, Part H-1).

• A careful check must be made to ensure that no cartridges or charges are left where they could enter equipment or be accidentally discharged in any area where they could create a fire or explosion hazard.

(18) Ladders required on waterfront docks. Employers must ensure that either permanent ladders or portable ladders:

• Are readily available for emergency use on all waterfront docks.

• Extend from the face of the dock to the water line at its lowest elevation.

• Are installed at intervals not to exceed 400 feet.

• Are noticeable by painting the dock area immediately adjacent to the ladder with a bright color which contrasts with the surrounding area.

• Have been secured with a suitable method.

Note: When working on or around water also see WAC 296-800-160.

(19) Prevent overhang while removing materials. Extreme care must be taken to prevent material from creating an overhang while removing the materials from piles or bins.

[Statutory Authority: RCW 49.17.010, [49.17].040, and [49.17].050. 01-11-038, § 296-79-020, filed 5/9/01, effective 9/1/01; 99-16-083, § 296-79-020, filed 8/3/99, effective 11/3/99. Statutory Authority: RCW 49.17.040 and 49.17.050. 82-13-045 (Order 82-22), § 296-79-020, filed 6/11/82; Order 77-12, § 296-79-020, filed 7/11/77; Order 74-24, § 296-79-020, filed 5/6/74; Order 70-6, § 296-79-020, filed 7/10/70, effective 8/10/70.]

WAC 296-79-030 Guards and guarding. For additional guarding requirements see chapter 296-806 WAC, Machine safety.

(1) Safeguarding specific areas, machines or conditions. Certain equipment, tools, machines, and areas present definite hazards and must be safeguarded by compliance with the following requirements:

(a) Broke shredders. Cutting heads must be completely enclosed except for opening at feed side sufficient only to permit entry of stock. The enclosure must be:

• Bolted or locked in place, and

• Of solid material or with mesh or other openings not exceeding 1/2 inch.

(b) Stitching or sewing machine. Carton or bag stitching machines must be properly safeguarded to prevent persons from coming in contact with the stitching head and other pinch or nip points.

(c) Beaters and pulpers.

(i) A guardrail of standard height must be installed when the top edge of vessels or tubs is less than standard height guardrails above the floor or operator's platform. If necessary for the protection of the person feeding equipment, an intermediate guardrail or other suitable protection shall be installed.

(ii) Beater rolls must be provided with covers.

(d) First dryer. A permanent guard or apron guard, or both, must be installed to protect workers from any exposed ingoing nip of the first dryer drum in each section if the area is accessible to workers while the dryer is in operation.

(e) Floor and drain openings. Floor and drain openings in walkways and general work areas must be covered with material or gratings with openings no larger than 2" in the narrow dimension.

(f) Mechanical devices to dump chip cars, trucks or trailers.

• When using mechanical equipment to elevate the front end of the chip containers for dumping into a hopper, the shear area between the floor and the elevated section must be safeguarded.

• The pit area must be adequately safeguarded or barricaded.

• Safeguards must be installed around the exposed sides of a chip hopper.

(2) Replacing guards. All permanent guards must be replaced or adequate temporary safeguards provided before a machine is put into operation.

(3) Protection from moving materials. When material, such as chunks, slivers, cants, or logs, could be thrown or flipped by a saw, barker, or other machines, adequate barricades, screens, netting, or other safeguards must be provided and maintained.

(4) Protection for areas where guards are impractical. When normal guarding is impractical:

• The hazard must be reduced to a minimum by use of safety chains, lifelines, signs or other reasonable means, and

• Areas which present a hazard which cannot be reasonably safeguarded must be identified by use of paint or other materials.

(5) Knives and scissors.

(a) Knives used for chip or hog fuel machines, or guillotine cutters, must be secured in properly constructed containers during transportation.

(b) Workers must be furnished properly designed and constructed sheaths for safely carrying knives and scissors used for cutting or trimming pulp and paper.

(c) Tables where paper is being cut must be equipped with sheaths or shelves for safe storage of knives and scissors.

(d) Sharp edged slitter knives subject to accidental contact must be effectively guarded. Carriers must be provided and used when transporting or carrying sharp edged slitter knives.

(e) Hand knives and sharpening steels used in paper preparation, must be provided with guards at the junction of the handle and the blade. Utility knives with blade exposure two and one-half inches or less are exempted from this requirement.

(6) Safeguard for foot operated treadle switch used to activate power driven equipment. Foot operated treadle switches used for activation of power driven equipment must be protected by a stirrup type guard or equivalent protection must be provided to prevent accidental activation.

(7) Automatic pressure actuated stopping devices. Hand fed machines and other moving equipment which create shear or pinch points which cannot be reasonably guarded may be safeguarded by the installation of pressure activated bars or sensing devices which, when contacted, will automatically stop the machine or equipment.

[Statutory Authority: RCW 49.17.010, 49.17.040, 49.17.050, and 49.17.060. 04-14-028, § 296-79-030, filed 6/29/04, effective 1/1/05. Statutory Authority: RCW 49.17.010, [49.17].040 and [49.17].050. 99-16-083, § 296-79-030, filed 8/3/99, effective 11/3/99; Order 74-24, § 296-79-030, filed 5/6/74; Order 70-6, § 296-79-030, filed 7/10/70, effective 8/10/70.]

WAC 296-79-040 Fire protection, ignition sources and means of egress. For fire protection, ignition source, and means of egress requirements see chapter 296-24 WAC, Part G-1, G-2 and G-3 and WAC 296-800-300.

[Statutory Authority: RCW 49.17.010, [49.17].040, and [49.17].050. 01-11-038, § 296-79-040, filed 5/9/01, effective 9/1/01; 99-16-083, § 296-79-040, filed 8/3/99, effective 11/3/99; Order 74-24, § 296-79-040, filed 5/6/74; Order 70-6, § 296-79-040, filed 7/10/70, effective 8/10/70.]

WAC 296-79-050 Personal protection clothing and equipment. See WAC 296-800-160 for additional personal protective equipment requirements.

(1) Rings or other jewelry that could create a hazard should not be worn by employees while in the performance of their work.

(2) Protective footwear.

• Employees who work in areas where there is a possibility of foot injury due to falling or rolling objects must wear safety type footwear.

• Employers will supply shoe guards and toe protectors.

• Employers must also make safety shoes available for purchase by employees at not more than actual cost to the employer.

(3) Calks or other suitable footwear that will afford reasonable protection from slipping must be:

• Worn while working on logs.

• Made available at not more than actual cost to the employer.

[Statutory Authority: RCW 49.17.010, [49.17].040, and [49.17].050. 01-11-038, § 296-79-050, filed 5/9/01, effective 9/1/01; 99-16-083, § 296-79-050, filed 8/3/99, effective 11/3/99. Statutory Authority: Chapter 49.17 RCW. 94-20-057 (Order 94-16), § 296-79-050, filed 9/30/94, effective 11/20/94; 89-11-035 (Order 89-03), § 296-79-050, filed 5/15/89, effective 6/30/89. Statutory Authority: RCW 49.17.040 and 49.17.050. 83-24-013 (Order 83-34), § 296-79-050, filed 11/30/83; 82-13-045 (Order 82-22), § 296-79-050, filed 6/11/82; Order 74-24, § 296-79-050, filed 5/6/74; Order 70-6, § 296-79-050, filed 7/10/70, effective 8/10/70.]

WAC 296-79-070 Illumination. (1) Illumination required. Lighting that is adequately adjusted to provide a margin of safety for all work tasks must be provided and maintained.

(a) The minimum level of task lighting for all indoor activities must be an average of ten-foot candles measured thirty inches above the floor or at the task.

(b) The minimum level of task lighting for all outdoor activities must be an average of five-foot candles measured thirty inches above the working surface or at the task.

(2) If general lighting is not provided throughout the work area, the employer must provide illumination which is adequately adjusted to provide visibility of nearby objects that might be potential hazards or to see to operate emergency control or other equipment. The minimum level of nontask lighting for all indoor and outdoor activities must be an average of three-foot candles measured thirty inches above the floor or working surface.

Note: This section establishes minimal levels of illumination for safety purposes only. Guidelines pertaining to optimal levels of lighting and illumination may be found in practice for Industrial Lighting, ANSI/IES RP7-1979. The minimum levels specified in subsections (1) and (2) of this section represent averages with the lowest level in an area to be no less than fifty percent of the indicated value.

(3) Emergency or secondary lighting system required.

(a) There must be an emergency or secondary lighting system that can be actuated immediately upon failure of the normal power supply system. The emergency or secondary lighting system must provide illumination in the following areas:

• Wherever it is necessary for workers to remain at their machine or station to shut down equipment in case of power failure.

• At stairways and passageways or aisleways used by workers as an emergency exit in case of power failure.

(b) Emergency lighting facilities must be checked at least every 30 days for mechanical defects. Defective equipment must be given priority for repair schedule.

[Statutory Authority: RCW 49.17.010, [49.17].040 and [49.17].050. 99-16-083, § 296-79-070, filed 8/3/99, effective 11/3/99; Order 74-24, § 296-79-070, filed 5/6/74; Order 70-6, § 296-79-070, filed 7/10/70, effective 8/10/70.]

WAC 296-79-080 Elevators, manlifts and other lifting devices. (1) All elevators, manlifts or other lifting devices must be installed and maintained in conformity with the requirements specified in the Washington state elevator laws and regulations adopted by the elevator section of the department of labor and industries.

(2) Inspection of elevators, etc., for acid towers.

(a) Outside elevators must be inspected daily during winter months when ice materially affects safety.

(b) Elevators, runways, stairs, etc., for acid towers must be inspected monthly for defects that may occur because of exposure to acid or corrosive gases.

(3) Respirators on elevators. Elevators located in areas where exposure to potentially harmful concentrations of toxic substances may occur must be equipped with an adequate supply of respirators to protect the maximum number of passengers.

[Statutory Authority: RCW 49.17.010, [49.17].040 and [49.17].050. 99-16-083, § 296-79-080, filed 8/3/99, effective 11/3/99; Order 74-24, § 296-79-080, filed 5/6/74; Order 70-6, § 296-79-080, filed 7/10/70, effective 8/10/70.]

WAC 296-79-090 Electrical equipment and distribution. All electrical installations and electrical utilization equipment must comply with chapter 296-24 WAC, Part L, and WAC 296-800-280.

(1) Operator controlled devices. Push buttons, selector switches, remote control switches, automatic circuit activating devices, and other control circuit type devices must be marked to indicate their function and the equipment they control.

(2) Posting equipment automatically activated or remotely controlled. If it will create a hazard to personnel, equipment which is automatically activated or remotely controlled must be posted, warning persons that machine may start automatically.

[Statutory Authority: RCW 49.17.010, [49.17].040, and [49.17].050. 01-11-038, § 296-79-090, filed 5/9/01, effective 9/1/01; 99-16-083, § 296-79-090, filed 8/3/99, effective 11/3/99. Statutory Authority: Chapter 49.17 RCW. 91-24-017 (Order 91-07), § 296-79-090, filed 11/22/91, effective 12/24/91; Order 74-24, § 296-79-090, filed 5/6/74; Order 70-6, § 296-79-090, filed 7/10/70, effective 8/10/70.]

WAC 296-79-100 Floors, platforms, stairways, ladders, loading docks. See chapter 296-24 WAC, Part J, and chapter 296-800 WAC.

[Statutory Authority: RCW 49.17.010, [49.17].040, and [49.17].050. 01-11-038, § 296-79-100, filed 5/9/01, effective 9/1/01; 99-16-083, § 296-79-100, filed 8/3/99, effective 11/3/99; Order 74-24, § 296-79-100, filed 5/6/74; Order 70-6, § 296-79-100, filed 7/10/70, effective 8/10/70.]

WAC 296-79-110 Elevated runways and ramps used by vehicles. (1) Runways and ramps must:

(a) Be cleated, grooved, rough surfaced, or covered with a material that will minimize the danger of skidding.

(b) Not have a maximum incline exceeding 20° from horizontal if used for wheeled equipment.

(2) Guarding exposed sides.

• Elevated ramps or runways used for the travel of wheeled equipment must have exposed sides guarded with a substantial bull rail or shear rail of sufficient height to prevent wheeled equipment from going over the rail.

• If elevated ramps or runways are used by pedestrians, standard guardrails must be installed on runways wherever the height exceeds 4 feet above the adjacent area except where used for loading or unloading purposes.

[Statutory Authority: RCW 49.17.010, [49.17].040 and [49.17].050. 99-16-083, § 296-79-110, filed 8/3/99, effective 11/3/99; Order 74-24, § 296-79-110, filed 5/6/74; Order 70-6, § 296-79-110, filed 7/10/70, effective 8/10/70.]

WAC 296-79-120 Scaffolds, construction, use and maintenance. See General safety and health standards, chapter 296-24 WAC, Part J-2 or Safety standards for construction work, chapter 296-155 WAC, Part J-1.

[Statutory Authority: RCW 49.17.010, [49.17].040, and [49.17].050. 01-11-038, § 296-79-120, filed 5/9/01, effective 9/1/01; 99-16-083, § 296-79-120, filed 8/3/99, effective 11/3/99; Order 74-24, § 296-79-120, filed 5/6/74; Order 70-6, § 296-79-120, filed 7/10/70, effective 8/10/70.]

WAC 296-79-130 Crossovers, aisles, passages. See chapter 296-24 WAC, Part D, for additional requirements for aisles and passages.

(1) Clearances to be marked. Low clearance areas under conveyors which could present a hazard to mobile equipment operations must be identified by a suitable means, such as signs, contrasting colors, or tell-tales.

(2) Crossovers over obstructions in passageways. Crossovers must be provided where employees are required to cross over transmission drive lines or other permanent obstructions in passageways or walkways.

[Statutory Authority: RCW 49.17.010, [49.17].040 and [49.17].050. 99-16-083, § 296-79-130, filed 8/3/99, effective 11/3/99; Order 74-24, § 296-79-130, filed 5/6/74; Order 70-6, § 296-79-130, filed 7/10/70, effective 8/10/70.]

WAC 296-79-140 Installation, inspection, and maintenance of pipes, piping systems, and hoses. (1) Definitions applicable to this section.

"Hazardous material system" - any system within the following classifications:

• Flammable or explosive - any system containing materials which are hazardous because they are easily ignited and create a fire or explosion hazard, defined by NFPA as Class I liquids;

• Chemically active or toxic - any system containing material which offers corrosion or toxic hazard in itself or can be productive of harmful gases upon release, defined by NFPA 704M as Class 3 and 4 materials;

• Thermally hazardous - any system above 130°F which exposes persons to potential thermal burns;

• Pressurized - any gaseous system above 200 psig or liquid system above 500 psig.

"Piping system" - any fixed piping, either rigid pipe or flexible hose, including all fittings and valves, in either permanent or temporary application.

(2) Design and installation. All new piping systems intended to be used in hazardous material service must be designed and installed in accordance with applicable provisions of the ASME Code for Pressure Piping or in accordance with applicable provisions of ANSI B31.1-1995 through B31.8-1995.

(3) Inspection and maintenance.

(a) The employer must develop a formal program of installation inspections and maintenance for all hazardous material piping systems. The program must be:

• Based on sound maintenance engineering principle, and

• Demonstrate due consideration for the manufacturing specifications of the pipe, hose, valves and fittings, the ambient environment of the installation and the corrosive or abrasive effect of the material handled within the system.

(b) Type and frequency of tests and/or inspections and selection of inspection sites must be adequate to give indications that minimum safe design operating tolerances are maintained. The tests may include visual or nondestructive methods.

(4) Inspection records.

(a) Results of inspections and/or tests must be maintained as a record for each system. Portions of systems that are buried or enclosed in permanent structures in such a manner as to prevent exposure to employees even in the event of a failure, may be exempted from the inspection requirements only.

• Past records may be discarded provided the current inspection report and the immediately preceding two reports are maintained.

• When a system is replaced, a new record must be established and all past records may be discarded.

(b) Upon request the records for each system must be made available for review by the department of labor and industries.

(5) Systems or sections of systems found to be below the minimum design criteria requirements for the current service must be repaired or replaced with component parts and methods which equal the requirements for new installations.

(6) Identification of piping systems.

(a) USAS A13.1-1956, "Scheme for Identification of Piping Systems," must be followed.

Positive identification of a piping system content:

• Must have a lettered legend giving the name of the content in full or abbreviated form, or a commonly used identification system.

• Must be made and maintained at suitable intervals and at valves, fittings, and on both sides of walls or floors as needed.

• May have arrows to indicate the direction of flow.

• May provide necessary supplementary information such as hazard of use. This may be done by additional legend or by color applied to the entire piping system or as colored bands. Legends may be placed on colored bands.

Examples of legend which may give both positive identification and supplementary information regarding hazards or use are:

Ammonia	Hazardous liquid or gas
Chlorine	Hazardous liquid or gas
Chlorine dioxide	Hazardous liquid or gas
Sulphur dioxide	Hazardous gas
Liquid caustic	Hazardous liquid
Liquid sulphur	Hazardous liquid
Sulphuric acid	Hazardous liquid
Sodium chlorate	When dry, danger of fire or explosion

Note: Manual L-1, published by Chemical Manufacturers Association, Inc., is a valuable guide in respect to supplementary legend.

• When color, applied to the entire piping system or as colored bands, is used to give supplementary information it should conform to the following:

CLASSIFICATION	PREDOMINANT COLOR
F—Fire-protection equipment	Red
D—Dangerous materials	Yellow (or orange)
S—Safe materials	Green (or the achromatic colors, white, black, gray or aluminum)

and, when required,

P—Protective materials	Bright blue

(b) When legend systems are used, legend boards showing the color and identification scheme in use must be prominently displayed at each plant. They must be located so that employees who may be exposed to hazardous material piping systems will have a frequent reminder of the identification program.

(c) All employees who work in the area of hazardous material piping systems must be given training in the color and identification scheme in use.

(7) Steam hoses. Steam hoses must be specifically designed to safely carry steam at any pressures to which they may be subjected.

[Statutory Authority: RCW 49.17.010, [49.17].040, [49.17].050. 02-12-098, § 296-79-140, filed 6/5/02, effective 8/1/02; 99-16-083, § 296-79-140, filed 8/3/99, effective 11/3/99. Statutory Authority: RCW 49.17.040, 49.17.050 and 49.17.240. 81-13-053 (Order 81-9), § 296-79-140, filed 6/17/81. Statutory Authority: RCW 49.17.040, 49.17.240, and chapters 43.22 and 42.30 RCW. 81-03-007 (Order 80-31), § 296-79-140, filed 1/8/81; Order 74-24, § 296-79-140, filed 5/6/74; Order 70-6, § 296-79-140, filed 7/10/70, effective 8/10/70.]

WAC 296-79-150 Powered industrial trucks and other equipment. Additional requirements on mobile equipment and lift trucks are in chapter 296-24 WAC, Part D.

(1) The operator of a power-driven vehicle must test the brakes, steering gear, lights, horns, warning devices, clutches, etc., before operating vehicle.

(2) Control levers of lift trucks, front end loaders, or similar types of equipment must not be operated except when the operator is in the proper operating position.

(3) No person may be permitted to ride on a powered hand truck unless it is so designed by the manufacturer. A limit switch must be on the operating handle—30 degrees each way from a 45-degree angle up and down.

(4) Employees must not work below the raised bed of a dump truck, raised buckets of front end loaders, raised blades of tractors or in similar positions without blocking the equipment in a manner that will prevent it from falling.

(5) Reporting suspected defects. If, in the opinion of the operator, a power-driven vehicle is unsafe, the operator must report the suspected defect immediately to the person in charge. Any defect that would make the vehicle unsafe to

operate under existing conditions will be cause to take the vehicle out of service and it must not be put back into use until it has been made safe.

(6) Vehicle operators must have a reasonably unobstructed view of the direction of travel, or, where this is not possible, the operator must be directed by a person or by a safe guidance means or device. Where practical, mirrors must be installed at blind corners or intersections that will allow operators to observe oncoming traffic.

(7) Vehicles in congested areas must operate with a warning light.

(8) Passengers must not be permitted to ride with legs or arms extending outside any vehicle nor must they be permitted to ride unless a passenger seat or other protective device is provided.

(9) Guard on operator's platform. Every power truck operated from an end platform or standing position must be:

• Equipped with a platform extending beyond the operator's position, and

• Strong enough to withstand a compression load equal to the weight of the loaded vehicle applied along the longitudinal axis of the truck with the outermost projection of the platform against the flat vertical surface.

(10) Cleaning vehicles. All vehicles must be kept free of excessive accumulations of dust and grease that may present a hazard.

(11) Vehicles must be controlled manually while being pushed or towed except when a tow bar is used. Pushing of vehicles or railroad cars with the forks or clamps of a lift truck is prohibited.

(12) Aisles or passageways should be at least three feet wider than the widest vehicle or load traveling the aisle or passageway. When this clearance cannot be maintained, adequate precautions must be taken.

(13) The forks, clamps, or attachments of lift trucks must be kept as low as possible while the vehicle is moving.

(14) The hoisting of personnel by lift trucks must meet the requirements in WAC 296-24-230.

(15) Exhaust systems on lift trucks and jitneys shall be constructed to discharge either within 20 inches from the floor or 84 inches or more above the floor.

(16) Mobile equipment with an enclosed cab must be provided with an escape hatch or other method of exit in case the regular exit cannot be used.

(17) Suitable methods must be used or devices installed which will prevent the trailer from tipping while being loaded or unloaded.

(18) Whenever vehicles using LP gas as a fuel are parked overnight or stored for extended periods of time indoors, with the fuel container in place, the service valve of the fuel container must be closed.

(19) The use of spinners on steering wheels must be prohibited unless an anti-kick device is installed or the equipment has a hydraulic steering system.

(20) Rolls transported with a grab or clamp attachment must be carried with the core in a vertical position.

(21) When traveling empty with a grab or clamp attachment, the jaws or blades of those attachments must remain within the running lines of the lift truck.

(22) When transporting two or more rolls with a roll grab attachment, the bottom roll will have at least sixty percent of the grab attachment on it.

(23) When transporting two or more rolls or bales with a grab or clamp attachment, there must be no rolls or bales unsecured if there is risk of part or all of the load shifting or falling.

[Statutory Authority: RCW 49.17.010, [49.17].040 and [49.17].050. 99-16-083, § 296-79-150, filed 8/3/99, effective 11/3/99; Order 74-24, § 296-79-150, filed 5/6/74; Order 70-6, § 296-79-150, filed 7/10/70, effective 8/10/70.]

WAC 296-79-160 Requirements for cranes and hoists—See general safety and health standards (chapter 296-24 WAC, Part D). Grounding - Where conditions such as corrosive atmospheres, dirt, paint, rust, or other insulating materials prevent reliable metal-to-metal contact for grounding (bridge, wheel and its respective tracks), a separate ground conductor must be provided.

[Statutory Authority: RCW 49.17.010, [49.17].040 and [49.17].050. 99-16-083, § 296-79-160, filed 8/3/99, effective 11/3/99; Order 74-24, § 296-79-160, filed 5/6/74; Order 70-6, § 296-79-160, filed 7/10/70, effective 8/10/70.]

WAC 296-79-170 Requirements for crawler and truck cranes. (1) Boom length indicated. The length must be plainly marked on each boom section of a mobile crane having a sectioned boom.

(2) Radius or boom angle indicator. A radius or boom angle indicator must be installed where it is readily visible to the operator's normal operating position on all cranes having a movable working boom.

(3) Safety device for light fixtures. Any light fixtures attached to crane boom or machinery house must have a safety strap or other device attached which will prevent the fixture from falling.

(4) Boom stops. Boom stops must be:

• Installed to govern the upward travel of the boom to a safe limit.

• Of adequate strength to prevent the boom from traveling past the vertical position.

(5) Controls marked. Crane operating controls must be marked or an explanation of the controls' functions must be posted in full view of the operator.

(6) Locking hydraulic outriggers. Hydraulic outriggers must be:

• Equipped with a pilot operated check valve or

• Installed with a mechanical lock which will prevent outriggers from retracting in case of failure of the hydraulic system.

(7) Top of boom painted. The top six feet of the boom or jib must be painted bright yellow or other bright contrasting color if the boom is yellow.

(8) Warning devices. All cranes must be equipped with a suitable warning device such as a horn or whistle.

(9) Hook safety device. All hooks must be equipped with a safety device or other effective means must be used to prevent accidental unhooking of the load.

(10) Counterweight limited. The amount of crane counterweight must not exceed the maximum amount specified by the crane manufacturer.

(11) Use proper size wire rope for sheaves. The size and diameter of sheaves and wire rope must be compatible and follow the recommendations by the manufacturer, published by the Wire Rope Institute or other acceptable engineering practices.

(12) Loading or unloading gear. Unloading gear such as grapples, tongs, and buckets, must not be left suspended when not in use or whenever the machine is unattended.

(13) No one under load. Personnel must not position themselves under crane loads and such loads must not be carried over workers.

(14) Operating clearance from stationary objects. Where the area is accessible to workers:

• A distance of 30 inches must be maintained between the outermost part of a revolving crane and any stationary object within the swing radius of the crane or

• The hazardous area must be temporarily guarded or barricaded.

(15) See WAC 296-24-960 when working around energized lines.

(16) Operators must avoid contacting overhead obstructions which may damage the boom or adversely affect stability. In instances where the operator may have difficulty in observing clearances, a signal person must be stationed where they can observe clearances and signal the operator.

(17) Safe travel across thoroughfares or railroad tracks.

• When moving cranes, shovels or similar types of equipment across thoroughfares or railroad tracks and the operator does not have a clear vision of approaching traffic, a flagperson must be used.

• The flag person must be stationed where the equipment operator can be signaled and other traffic can be controlled.

(18) Only a designated member of the crew may give signals to the crane operator. Exception: Anyone may give an emergency stop signal.

(19) Standard hand signals. When using visual signals, standard hand signals as illustrated, must be used for directing crane operators.

CRAWLER, LOCOMOTIVE, AND TRUCK CRANES
STANDARD HAND SIGNALS FOR CRANES

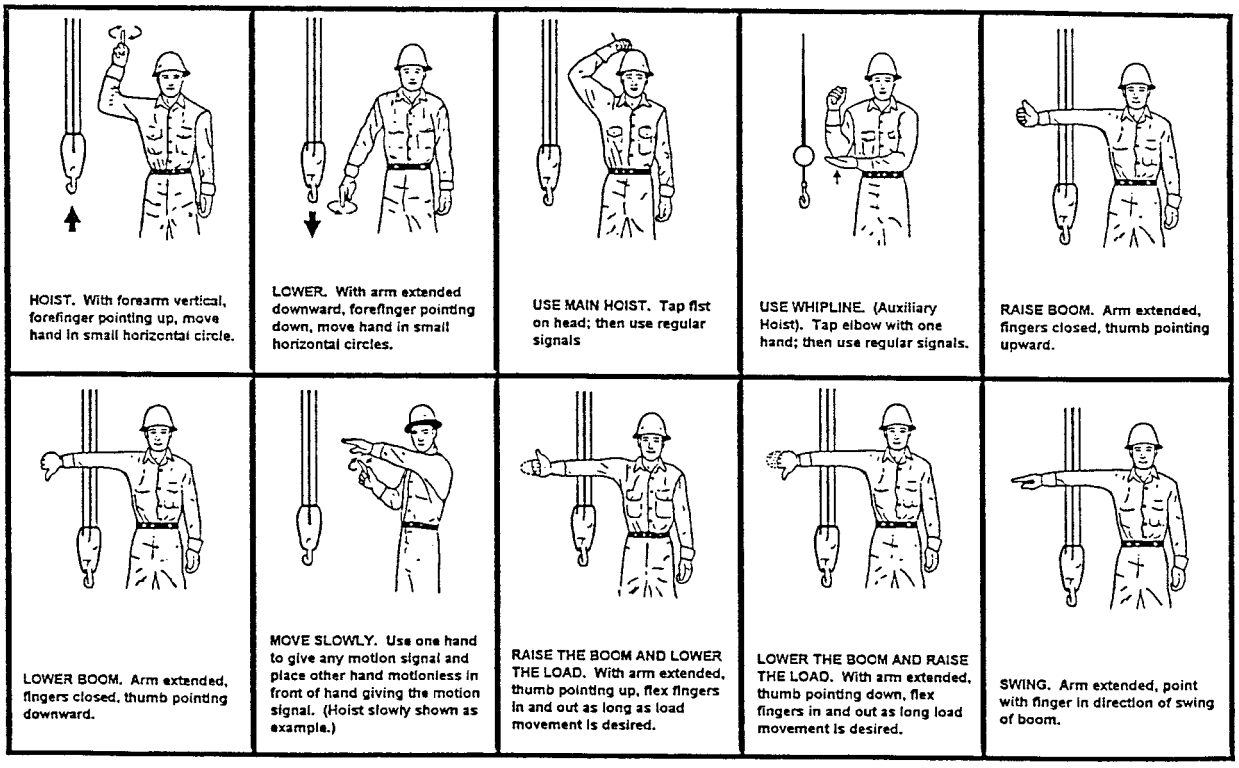

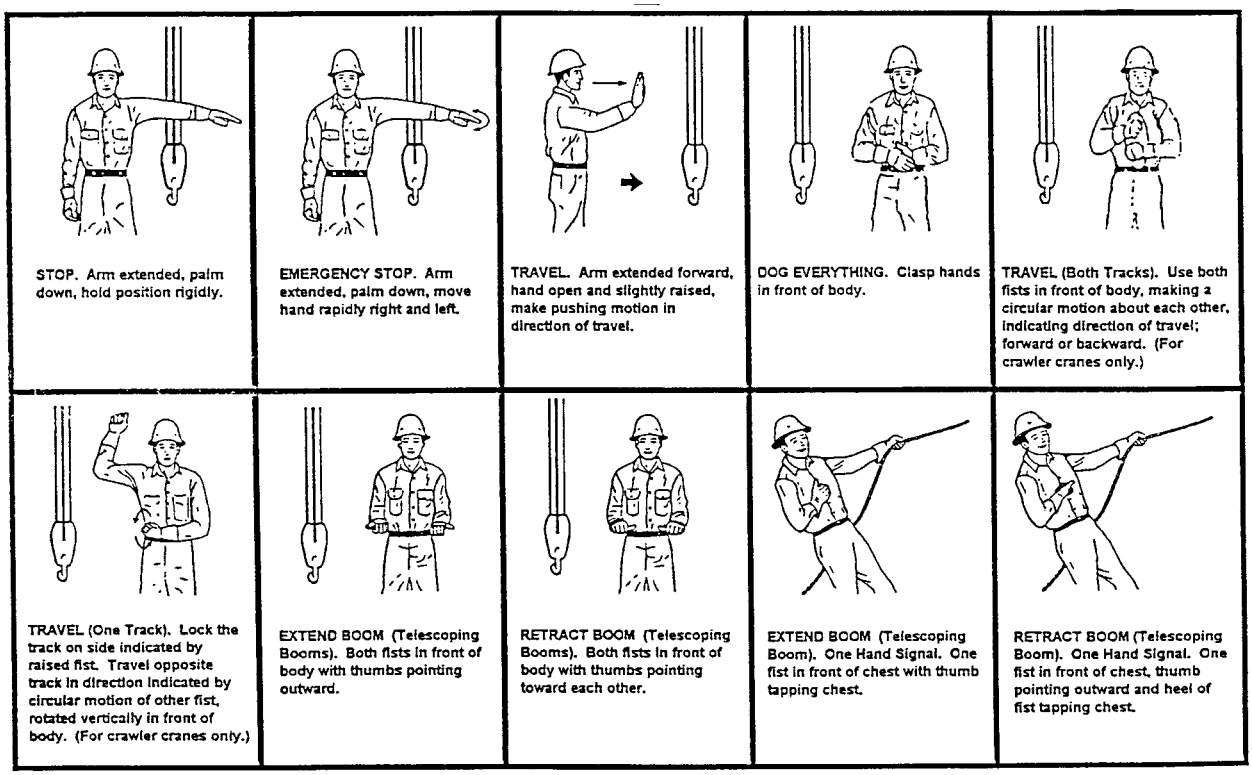

STANDARD HAND SIGNALS FOR CONTROLLING OVERHEAD AND GANTRY CRANES

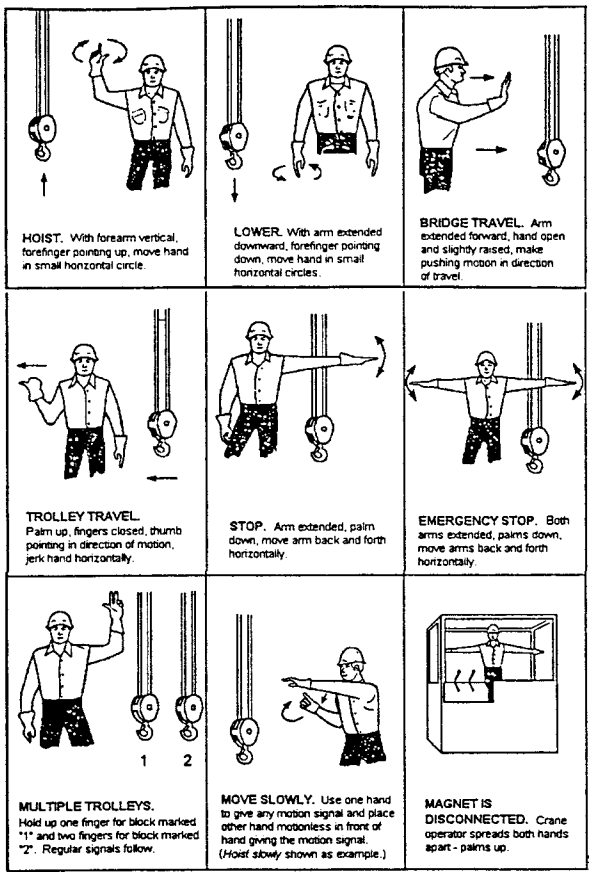

[Statutory Authority: RCW 49.17.010, [49.17].040 and [49.17].050. 99-16-083, § 296-79-170, filed 8/3/99, effective 11/3/99. Statutory Authority: RCW 49.17.040, 49.17.050 and 49.17.240. 81-13-053 (Order 81-9), § 296-79-170, filed 6/17/81. Statutory Authority: RCW 49.17.040, 49.17.240, and chapters 43.22 and 42.30 RCW. 81-03-007 (Order 80-31), § 296-79-170, filed 1/8/81; Order 74-24, § 296-79-170, filed 5/6/74; Order 70-6, § 296-79-170, filed 7/10/70, effective 8/10/70.]

WAC 296-79-180 Privately owned standard gauge railroad operations. (1) Blue flag or light for railroad operations.

• A blue signal (blue flag or blue light for nonilluminated areas) must be displayed at one or both ends of an engine, car(s), or train, to indicate that workers are under or about the railway equipment.

• When such warning devices are displayed, the equipment must not be coupled to or moved.

• On a dead end spur, a blue signal may be displayed adjacent to the switch opening while cars are being loaded or unloaded.

(2) Blue signals and derails.

• Work being carried on which subjects employees to the hazard of moving railroad equipment must be protected by blue signals and locked derails set a minimum of 50 feet from one or both ends of the worksite.

• Where the spur track switch is less than 50 feet from the work location, the switch padlocked in the open position will take the place of the derail and the blue signal must be placed at that point.

(3) Signals unobscured. Equipment which would obscure the blue signal must not be placed on the track.

(4) Signals displayed by each maintenance crew. Each maintenance crew must display and remove its own set of blue signals.

(5) Warning device.

• A flashing warning light or other device must be installed near any opening which leads to a passageway crossing railroad tracks adjacent to the building.

• Such light or device must be activated prior to any switching or movement of railroad equipment to warn workers of the dangerous condition in the area.

(6) Cars to be immobilized. Spotted cars must either have brakes set, wheels blocked, or must be coupled to other immobilized cars to prevent each car from rolling.

(7) Crawling under or between coupled cars prohibited. Workers must not crawl under or pass between coupled railroad cars to cross tracks.

(8) Warning at road crossing. An audible whistle, horn or bell must be sounded by the locomotive engineer to give adequate warning prior to switching across any road crossing.

(9) Flying switches. When switching railroad equipment in congested areas or across roadways or walkways "flying switches" must be prohibited.

(10) Car opening devices. All box car doors and associated mechanisms must be carefully inspected before workers attempt to open or close them. If the door is not free and cannot be opened safely by hand, equipment must be provided, where necessary, and a safe method must be used to open or close the door.

(11) Clearance from railroad tracks. Materials must not be stacked or piled closer than 8 1/2' from the center line of a standard gauge railroad track.

(12) Operating under limited visibility conditions.

Unless trains are operated in a manner to allow the operator to see a safe stopping distance in the direction of travel, a flagperson(s) must be positioned in such a manner to safely direct movement of the train.

Flagperson must:

• Remain within sight of the operator, or

• Be equipped to maintain visual or voice communication with the operator as conditions dictate.

(13) A flagperson must direct the movement of trains being moved across main roads or thoroughfares which do not have adequate traffic warning lights, bells or barricades.

[Statutory Authority: RCW 49.17.010, [49.17].040 and [49.17].050. 99-16-083, § 296-79-180, filed 8/3/99, effective 11/3/99. Statutory Authority: RCW 49.17.040, 49.17.240, and chapters 43.22 and 42.30 RCW. 81-03-007 (Order 80-31), § 296-79-180, filed 1/8/81; Order 74-24, § 296-79-180, filed 5/6/74; Order 70-6, § 296-79-180, filed 7/10/70, effective 8/10/70.]

WAC 296-79-190 Loading and unloading materials from railway cars or trucks. (1) Safe access to top of railroad cars or trucks. Platforms with ladders or stairways must be installed or made available when needed so that workers may safely gain access to and perform work on the top of railroad cars or trucks when ladders are not installed on such equipment.

(2) Nets not to cover ladders. Rolled chip nets must not be positioned where they cover the ladders on railroad cars or trucks.

(3) Tipple type unloading device. When a tipple type unloading device is used for removing chips from cars, the cars must be properly secured in place and all employees must be in the clear before dumping operation is started.

(4) Handling pulp chips and hog fuel from trucks and trailers.

(a) Elevating platform-type or cable-lift type unloading devices must have adequate back bumper stops.

(b) Side rails or other positive means to prevent the trailer from falling must be used while unloading single trailer units.

(c) The truck or tractor must be secured when elevating platform lifts are used to elevate both the tractor and trailer or single unit trucks.

(d) All personnel must be clear of all hoisting or elevating mechanisms before dumping commences.

(e) No person is allowed in any truck while the truck is being elevated.

(5) Taking chip samples. A safe area and suitable device must be provided for the chip tester to use while taking chip samples.

(6) Derail required for hazardous materials. To protect tank cars from being moved while loading or unloading hazardous materials by use of pipes or hoses, a derail and blue flag must be set between the spotted tank cars and any moving railroad equipment.

(7) Moving cars by tugger or powered drums. When rail cars are moved by a tugger or powered drums with cables, a means should be provided or the area barricaded in such a manner that the moving cables do not endanger the workers.

(8) Handling pulpwood from flatcars and all other railway cars.

(a) Railroad flatcars for the conveyance of pulpwood loaded parallel to the length of the car must be equipped with safety-stake pockets.

(b) Where pulpwood is loaded crosswise on a flatcar sufficient stakes of sizes not smaller than 4 by 4 inches must be used to prevent the load from shifting.

(c) Cutting stakes on log bundles. When it is necessary to cut stakes:

• Those on the unloading side should be partially cut through first, and then the binder wires cut on the opposite side.

• Wire cutters equipped with long extension handles must be used.

• No person is permitted along the dumping side of the car after the stakes have been cut.

(d) Cutting bands on log bundles. When cutting bands on bundled logs, workers must:

• Position themselves in a safe location;

• Not use double bitted axes for cutting bands;

• Use caution to prevent being struck by ends of bands being cut and;

• If needed, wear personal protective equipment.

(e) Flatcars and all other cars must be:

• Chocked during unloading and,

• Rail clamping chocks must be used when equipment is not provided with hand brakes.

(9) Handling pulpwood from trucks.

(a) Cutting of stakes and binder wires must be done in accordance with (8)(c) of this section.

(b) Binders or stakes must not be loosened or removed:

• Until the logs are secured and held by equipment which will prevent them from rolling off the truck, or

• Barricades will prevent logs from striking the person removing the binders or stakes.

(c) Where binder chains and crane slings are used:

• The crane slings must be attached and taut before the binder chains are released and,

• The hooker must see that the helper is clear before signaling for the movement of the load.

(d) The truck driver must:

• Leave the truck cab and remain in the clear, preferably in a designated area, and

• Be in clear view of the unloading equipment operator while the unloader is approaching the loaded truck.

• After a complete load is lifted as a unit and held stationary, the truck driver may enter the cab and drive forward from under the suspended load.

[Statutory Authority: RCW 49.17.010, [49.17].040 and [49.17].050. 99-16-083, § 296-79-190, filed 8/3/99, effective 11/3/99; Order 74-24, § 296-79-190, filed 5/6/74; Order 70-6, § 296-79-190, filed 7/10/70, effective 8/10/70.]

WAC 296-79-200 Bridge and dock plates. Properly constructed bridge or dock plates must be furnished and used to bridge the area between a dock and truck or railroad car. The following requirements must be complied with for construction and use of such bridge or dock plates:

(1) Strength. The plate must be capable of supporting three times the maximum load to which it will be subjected.

(2) Stops. The plates must be provided with positive stops to prevent the plates from shifting or moving.

(3) Plates.

• The plates must bear solidly on the dock and on the floor of the car or truck.

• Plates with excessive teeter or rock must be repaired or replaced.

(4) Upturn or lip on plates. The sides of bridge or dock plates must have an upturn or lip of at least 4 inches covering the area between the edge of the loading dock and edge of car or truck floor whenever this distance exceeds 18 inches to prevent wheeled equipment from running off the sides.

(5) Bearing surface. Bridge or dock plates must have at least 6 inches bearing surface on the loading dock.

(6) Suitable fittings to be used. Bridge or dock plates intended to be moved by mechanized equipment must be designed for this purpose or appropriate fittings or attachments must be used.

[Statutory Authority: RCW 49.17.010, [49.17].040 and [49.17].050. 99-16-083, § 296-79-200, filed 8/3/99, effective 11/3/99; Order 74-24, § 296-79-200, filed 5/6/74; Order 70-6, § 296-79-200, filed 7/10/70, effective 8/10/70.]

WAC 296-79-210 For conveyors, maintenance and inspection. See chapter 296-24 WAC, Part D.

[Statutory Authority: RCW 49.17.010, [49.17].040 and [49.17].050. 99-16-083, § 296-79-210, filed 8/3/99, effective 11/3/99; Order 74-24, § 296-79-210, filed 5/6/74; Order 70-6, § 296-79-210, filed 7/10/70, effective 8/10/70.]

WAC 296-79-220 Deactivating and lockout requirements. (1) Control requirement. Whenever the unexpected startup of machinery, the energizing of electrical circuits, the flow of material in piping systems or the removal of guards would endanger workers, such exposure must be prevented by deactivating and locking out the controls as required by chapter 296-803 WAC, Lockout/tagout (control of hazardous energy).

EXCEPTION: In instances where any machine must be in motion for proper adjustment, for removal or replacement of materials from the machine, for machine clothing changes or for roping up, the following precautions must be observed:

• The machine must be operated at thread or jog speed;

• Extension tools which minimize personnel exposure must be used where possible;

• The operating controls must at all times be under the control of a qualified operator or craftsman;

• All personnel must remain in view of the operator or other means of communication shall be established;

• All personnel must be beyond the reach of other machine section(s) or element(s) which offer potential exposure. In any instance where such potential exposure exists, such other section(s) or element(s) must be separately locked out.

(2) Group lockout or tagout devices. Procedures must meet the minimum requirements of chapter 296-803 WAC, Lockout/tagout (control of hazardous energy). The employer must develop a specific written group lockout or tagout procedure and review it with the local plant labor/management safety committee before it can be utilized.

(3) Temporary or alternate power.

• Whenever possible, temporary or alternate sources of power to the equipment being worked on must be avoided.

• If the use of such power is necessary, all affected employees must be informed and the source of temporary or alternate power must be identified.

(4) Deactivating piping systems.

(a) Nonhazardous systems must be deactivated by at least locking out either the pump or a single valve.

(b) Lockout of the following hazardous material piping systems must isolate to the worksite and must provide protection against backflow where such potential exists:

• Gaseous systems that are operated at more than 200 psig;

• Systems containing any liquid at more than 500 psig;

• Systems containing any material at more than 130°F;

• Any cryogenic system,

• Systems containing material which is chemically hazardous as defined by NFPA 704 1996 Class 3 and 4;

• Systems containing material classified as flammable or explosive as defined in NFPA Class I.

Such systems must be deactivated by one of the following:

• Locking out both the pump and one valve between the pump and the worksite;

• Locking out two valves between the hazard source and the worksite;

• Installing and locking out a blank flange between the hazard source and worksite. When a blank flange (blind) is used to separate off portions of hazardous material systems from a portion which is in operation, the employer must develop and implement a procedure for installation and removal of the blank flange that will ensure all hazards have been eliminated;

• Line breaking between the hazard and the worksite;

• On hazardous chemical systems where the methods already listed are not feasible, or by themselves create a hazard, single valve closure isolation may be used provided that potentially exposed employees are adequately protected by other means such as personal protective equipment.

• On all steam systems where the methods already listed are not feasible, single valve closure isolation may be used provided that the system is equipped with valves meeting all requirements of ANSI B16.5-1996 and ANSI B16.34-1996. Where single valve isolation is used, the steamline must also be equipped with a bleed valve downstream from the valve closure to prove isolation of the worksite.

Note: Bleeder valves are recommended behind all primary valve closures on hazardous material systems. Consideration should be given to the nature of the material in the system when installing bleeder valves. To assist in preventing plugging, bleeder valves should generally be installed in the top one-third of the pipe. Short exhaust pipes should be installed on bleeder valves to direct the flow of possible escapement away from the position where an employee would normally be when using the bleeder valve.

[Statutory Authority: RCW 49.17.010, 49.17.040, 49.17.050, and 49.17.060. 04-15-105, § 296-79-220, filed 7/20/04, effective 11/1/04. Statutory Authority: RCW 49.17.010, [49.17].040 and [49.17].050. 99-16-083, § 296-79-220, filed 8/3/99, effective 11/3/99. Statutory Authority: RCW 49.17.040, 49.17.050 and 49.17.240. 81-13-053 (Order 81-9), § 296-79-220, filed 6/17/81. Statutory Authority: RCW 49.17.040, 49.17.240, and chapters 43.22 and 42.30 RCW. 81-03-007 (Order 80-31), § 296-79-220, filed 1/8/81; Order 76-7, § 296-79-220, filed 3/1/76; Order 74-24, § 296-79-220, filed 5/6/74; Order 70-6, § 296-79-220, filed 7/10/70, effective 8/10/70.]

WAC 296-79-230 Confined spaces. (1) Entry into confined spaces must be in accordance with chapter 296-62 WAC, Part M.

(2) All equipment necessary to perform the work, including safety equipment, must be at the confined space and must be inspected or tested to assure that it functions properly.

(3) Protective equipment that will afford proper protection to the employee from any condition which may arise based on the hazard assessment, must be available either at the entrance or within the confined space.

(4) Electrical circuits leading into confined spaces where electrical conductive hazards exist must be protected by a ground fault interrupter or the voltage must not exceed 24 volts.

(5) Battery operated flashlights or lantern must be readily available for use by persons working in areas where escape would be difficult if normal lighting system should fail. Only explosion-proof type lights may be taken into any atmosphere which may contain an explosive concentration.

[Statutory Authority: RCW 49.17.010, [49.17].040 and [49.17].050. 99-16-083, § 296-79-230, filed 8/3/99, effective 11/3/99; Order 74-24, § 296-79-230, filed 5/6/74; Order 70-6, § 296-79-230, filed 7/10/70, effective 8/10/70.]

WAC 296-79-240 Storage of fuel, oil, flammables and chemicals. See chapter 296-24 WAC, Part E.

[Statutory Authority: RCW 49.17.010, [49.17].040 and [49.17].050. 99-16-083, § 296-79-240, filed 8/3/99, effective 11/3/99; Order 76-7, § 296-79-240, filed 3/1/76; Order 74-24, § 296-79-240, filed 5/6/74; Order 70-6, § 296-79-240, filed 7/10/70, effective 8/10/70.]

WAC 296-79-250 Safety procedure for handling sulfur. (1) Sulfur burners. Sulfur-burner houses must:

• Be safely and adequately ventilated, and

• Every precaution taken to guard against dust, explosion hazards and fires, in accordance with American National Standards Z9.2-1979 (R1991).

(2) Handling/storage of dry sulfur.

(a) Nonsparking tools and equipment must be used in handling dry sulfur.

(b) Sulfur storage bins must be kept free of sulfur dust accumulation, and buildings should be designed with explosion relief, in accordance with the latest revision of American National Standard Z9.2-1979 (R1991).

(c) Sulfur-melting equipment must not be located in the burner room.

(3) Handling/storage of liquid sulfur.

(a) Each facility utilizing liquid sulfur must:

• Carefully examine its own handling system and

• Formulate a written procedure for maintenance, receiving, storing and using this product.

(b) A minimum of two trained employees must be assigned when a tank car is first opened in preparation for venting and unloading.

(c) Approved respiratory protective equipment for H2S exposure, chemical splash goggles and gloves must be worn when performing this work.

(d) Spark producing or electric operated tools must not be used to unplug railroad car vents.

(e) Where venting can cause harmful exposure to other unprotected workers in the area:

• A venting system must be installed which adequately contains any gas escapement from a tank car while venting.

• The vented gas must be carried to a safe location for discharge or circulated through a scrubbing system.

• The venting system must be connected before valves which would allow escapement are opened.

(f) Smoking, open burning or welding must be prohibited while unloading is in process or danger of gas escapement exists.

(4) Acid plant - Protection for employees.

(a) Where lime slaking takes place, employees must be provided with rubber boots, rubber gloves, protective aprons, and eye protection. A deluge shower and eyewash must be provided to flush the skin and eyes to counteract lime and acid burns.

(b) Hoops for acid storage tanks must be:

(i) Made of round rods rather than flat strips, and

(ii) Regularly inspected and safety maintained.

(c) Sulphur burner ignitors must have a means to automatically shut off the fuel to the ignitor when the flame has been extinguished.

[Statutory Authority: RCW 49.17.010, [49.17].040 and [49.17].050. 99-16-083, § 296-79-250, filed 8/3/99, effective 11/3/99. Statutory Authority: Chapter 49.17 RCW. 91-24-017 (Order 91-07), § 296-79-250, filed 11/22/91, effective 12/24/91; Order 76-7, § 296-79-250, filed 3/1/76; Order 74-24, § 296-79-250, filed 5/6/74; Order 70-6, § 296-79-250, filed 7/10/70, effective 8/10/70.]

WAC 296-79-260 Pulpwood storage and handling. (1) Piling of logs.

• Logs must be piled or removed in an orderly manner.

• The piles must be stable and individual logs properly placed to prevent them from rolling or falling.

• The ends must not project into walkways, roadways or areas reserved for other purposes and

• Sufficient clearance must be maintained for safe travel of all vehicles and loads.

(2) Wire rope doglines used for towing or rafting must not be used when:

• They acquire jaggers to the extent that they present a hazard to the employees handling them; or

• When they are weakened to the extent that they are hazardous.

(3) Boom sticks must be capable of safely supporting the weight imposed upon them.

(4) Stiff booms must be:

• Made by fastening not less than two boom sticks together.

• Not less than 36 inches in width measured from outside to outside of the outer logs.

• Fastened together with not less than 4 inch by 6 inch cross ties or cable lashing properly recessed into notches in the boom sticks and secured.

(5) Pike poles must be kept in good repair. Conductive pike poles must not be used when it is possible that they may come in contact with electrical conductors.

(6) Logs must not be lifted over employees and employees must stay clear of the hazardous area near where logs are being lifted or swung.

(7) Storing or sorting on water or any boom work other than boom boat operations, must require a minimum of two persons.

(8) All mobile equipment used to handle logs, blocks or cants must be provided with adequate overhead protection.

(9) Unloading lines must be so arranged that it is not necessary for the worker to attach them on the pond or dump side of the load.

(10) Unauthorized vehicles and unauthorized foot traffic must not be allowed in any active sorting, storing, loading, or unloading areas.

(11) Log unloaders must not be moved about the premises with loads raised higher than absolutely necessary.

(12) Jackets or vests of fluorescent or other high visibility material must be worn by persons working on dry land log storage.

(13) All log dumps must be periodically cleared of bark and other debris.

(14) Handles of wood hooks must be locked to the shank to prevent them from rotating.

[Statutory Authority: RCW 49.17.010, [49.17].040 and [49.17].050. 99-16-083, § 296-79-260, filed 8/3/99, effective 11/3/99; Order 74-24, § 296-79-260, filed 5/6/74; Order 70-6, § 296-79-260, filed 7/10/70, effective 8/10/70.]

WAC 296-79-270 Pulpwood preparation. (1) Barker feeding devices must be designed in such a manner that the operator will not be required to hold or make any physical contact with any log or bolt during the barking operations.

(2) A dog or locking device in addition to the motor switch, clutch, belt shifter or other power disconnecting device must be installed on all intermittent barking drums to prevent the drum from moving while it is being filled or emptied.

(3) Hydraulic barkers.

(a) The inlet and outlet areas of hydraulic barkers must be equipped with baffles or devices that will reasonably prevent material from flying out while the machine is in operation.

(b) The operator must be protected by at least five-ply laminated glass or material of equivalent strength.

(4) The high pressure hoses of hydraulic barkers must be secured in such a manner that the hose connection ends will be restrained if a hose connection fails.

(5) The feed operator's station must not be in direct line with the chipper blades. Suitable safeguards must be installed to prevent chips or chunks from being thrown out and striking the person feeding the machine.

(6) When the operator cannot readily observe the material being fed into the chipper, a mirror or other device must be installed in such a position that the ingoing material can be monitored.

(7) Metal bars or other nonchippable devices must not be used to clear jams or plug-up at the feed entrance to a chipper or hog while the machine is running.

(8) Water wheel speed governor.

• Water wheels, when directly connected to marker disks or grinders, must be provided with speed governors, if operated with gate wide open.

• Water wheels directly connected to pulp grinders must be provided with speed governors limiting the peripheral speed of the grinder to that recommended by the manufacturer.

(9) Knot cleaners of the woodpecker type.

• The operators of knot cleaners of the woodpecker type must wear eye protection equipment.

• Such knot cleaners should be enclosed to protect passersby from flying chips.

[Statutory Authority: RCW 49.17.010, [49.17].040 and [49.17].050. 99-16-083, § 296-79-270, filed 8/3/99, effective 11/3/99; Order 74-24, § 296-79-270, filed 5/6/74; Order 70-6, § 296-79-270, filed 7/10/70, effective 8/10/70.]

WAC 296-79-27003 Log hauls, slips, and carriages. (1) Controls must be:

• Arranged to operate from a position where the operator will at all times be in the clear of logs, machinery, lines, and rigging.

• Marked to indicate their function.

(2) Log decks must be provided with effective means to prevent logs from accidentally rolling down the deck and onto the carriage or its runway.

(3) When needed for protection of personnel, an automatic stop or interlocking device must be installed on log hauls or slips. These devices are not a substitute for lockout.

(4) A barricade or other positive stop of adequate strength must be provided to protect the sawyer from rolling logs.

(5) Canting gear or other equipment must not hang over the log deck in such a manner as to endanger employees.

(6) The sawyer shall be primarily responsible for the safety of the carriage crew and offbearers and must exercise due care in the operation of the carriage and log turning devices.

(7) Feed works and log turning control levers must be so arranged that they may be secured when not in use and must be adequately guarded against accidental activation.

(8) A control device must be provided so that the sawyer may stop the head rig section of the mill without leaving the stand.

(9) An effective method of disengaging the head rig saws from the power unit must be installed on all head rigs where the power unit is not directly controlled by the sawyer.

(10) The sawyer must be safeguarded either by location or by use of substantial screens or approved safety glass.

(11) Carriages upon which employees are required to work must be solidly decked over and the employees properly protected.

(12) The feed control lever of friction or belt-driven carriage feed works must be designed to operate away from the saws or carriage track.

(13) A substantial stop or bumper must be installed at each end of the carriage run.

(14) Substantial sweeps must be installed in front of each carriage wheel. Such sweeps must extend to within 1/4 inch of the rails.

(15) Where power-operated log turners are used, carriage knees must be provided with goosenecks or other substantial means of protecting the carriage crew.

[Statutory Authority: RCW 49.17.010, [49.17].040 and [49.17].050. 99-16-083, § 296-79-27003, filed 8/3/99, effective 11/3/99; Order 74-24, § 296-79-27003, filed 5/6/74.]

WAC 296-79-27005 Band saws. (1) Band saws must be given a thorough daily inspection and any deficiency reported and corrected.

(2) Any band saw found to have developed a crack greater than one-tenth the width of the saw must be:

• Removed from service until the width of the saw is reduced to eliminate the crack,

• The cracked section is removed, or

• The development of the crack is arrested by welding.

(3) Band saws must not be continued in use on the head rig for which they have been designed after they have been reduced 40% in width.

(4) Band saw guides must be maintained in good condition and proper alignment at all times.

(5) All head band saw wheels must have a minimum rim thickness of 5/8 inches, except for a distance not to exceed one inch from the front edge of the wheel.

(6) Band saws must not be run at a speed in excess of the manufacturer's recommendations.

(7) A band wheel that has developed a crack in the rim must be immediately removed from service. If a crack has developed in a spoke, the wheel must be removed from service until properly repaired.

(8) All band wheel guards must be constructed of not lighter than ten U.S. Gauge metal, or not less than two-inch wood material or equivalent, attached to substantial frames. Necessary ventilating ports, not larger than two by four inches, and suitable doors or gates for the lubrication and repair of the saw will be permitted.

(9) Every band mill must be equipped with a saw catcher, rest or guard of substantial construction.

(10) Each gang ripper of band or straight saw type must have the cutting edges of the saw guarded by a hood or screen substantially secured to the framework of the machine.

[Statutory Authority: RCW 49.17.010, [49.17].040 and [49.17].050. 99-16-083, § 296-79-27005, filed 8/3/99, effective 11/3/99; Order 74-24, § 296-79-27005, filed 5/6/74.]

WAC 296-79-27007 Circular saws speeds and repairs. (1) Circular saws must not be operated at speeds in excess of those specified by the manufacturers.

(2) Circular saws must be inspected for cracks each time the teeth are filed or set. They must be discontinued from use until properly repaired when found to have developed a crack exceeding the safe limits specified by the manufacturer.

(3) Damaged saws must be repaired only by persons experienced and knowledgeable in this type of work or by a manufacturers representative.

[Statutory Authority: RCW 49.17.010, [49.17].040 and [49.17].050. 99-16-083, § 296-79-27007, filed 8/3/99, effective 11/3/99; Order 74-24, § 296-79-27007, filed 5/6/74.]

WAC 296-79-27009 Slasher saws-tables. (1) Slasher saws must be guarded in accordance with WAC 296-79-030(3) of this chapter.

(2) Saws must be stopped and locked or tagged out whenever it is necessary for any person to be on the slasher table.

(3) Saws below table where not protected by the frame of the machine, the underside of the slasher saws must be adequately guarded.

[Statutory Authority: RCW 49.17.010, [49.17].040 and [49.17].050. 99-16-083, § 296-79-27009, filed 8/3/99, effective 11/3/99; Order 74-24, § 296-79-27009, filed 5/6/74.]

WAC 296-79-27011 Circular swing saws. (1) Each circular swing saw must be provided with a hood guard that completely encloses the upper half of the saw.

(2) Each swing saw must be equipped with a positive stop at the extent of the swing necessary to cut the material.

[Statutory Authority: RCW 49.17.010, [49.17].040 and [49.17].050. 99-16-083, § 296-79-27011, filed 8/3/99, effective 11/3/99; Order 74-24, § 296-79-27011, filed 5/6/74.]

WAC 296-79-27013 Drag saws—Fixed chain saws—Circular cut-off saws. (1) Saws must be so arranged that they will not project into any passageway when in an idle or working position. When existing conditions do not leave clear passage the saws must be fenced off in order to make it impossible for anyone to walk into them.

(2) Log decks must be equipped with a device to hold the material stable when being cut.

(3) Drag saws and fixed chain saws must be equipped with a device that will safely lock them in an "up" position.

(4) All persons must be in the clear before starting operations.

[Statutory Authority: RCW 49.17.010, [49.17].040 and [49.17].050. 99-16-083, § 296-79-27013, filed 8/3/99, effective 11/3/99; Order 74-24, § 296-79-27013, filed 5/6/74.]

WAC 296-79-27015 Construction and use of pulpwood splitters. (1) The activating control unit for a splitter must be of the clutch or positive acting type and must be so arranged and designed that it will not repeat without additional activation before starting a second cycle.

(2) The base or rest upon which the wood seats while being split must have a corrugated surface or other means shall be provided which will prevent the wood block or log from shifting as the pressure is applied.

(3) The splitter base or rest and wood to be split must be free of ice, snow, and chips.

(4) The splitter machine operator must have a clear, unobstructed view of the work area adjacent to the splitting operation when other workers must be in such area while blocks are being split.

[Statutory Authority: RCW 49.17.010, [49.17].040 and [49.17].050. 99-16-083, § 296-79-27015, filed 8/3/99, effective 11/3/99; Order 74-24, § 296-79-27015, filed 5/6/74.]

WAC 296-79-280 Chip and hog fuel storage. (1) Entry into bins and silos.

(a) Entry into chip bins and silos, must be in compliance with the requirements of confined space entry, WAC 296-79-230, of this chapter.

(b) Chip and sawdust bins. Steam or compressed air lances, or other safe methods, must be used for breaking bridges and hangups.

(c) Employees must be prohibited from working under or on top overhangs or bridges. Extreme care must be taken to prevent chips or hog fuel from creating an overhang or bridging.

(d) Hog fuel bins must be provided with an approved railed platform or walkways near the top or other approved means must be provided for use of employees engaged in dislodging hog fuel.

(2) Exterior chip and hog fuel storage.

(a) When mobile equipment is used on top of hog fuel or chip piles, a roll-over protection system must be installed on the equipment.

(b) If the cab is of the enclosed type, windshield wipers must be installed.

(c) If used during hours of darkness the area must be adequately illuminated or the equipment must have adequate lights to provide the operator sufficient illumination to safely perform the work.

[Statutory Authority: RCW 49.17.010, [49.17].040 and [49.17].050. 99-16-083, § 296-79-280, filed 8/3/99, effective 11/3/99; Order 74-24, § 296-79-280, filed 5/6/74; Order 70-6, § 296-79-280, filed 7/10/70, effective 8/10/70.]

WAC 296-79-290 Stock preparation and reprocessing.

[Statutory Authority: RCW 49.17.010, [49.17].040 and [49.17].050. 99-16-083, § 296-79-290, filed 8/3/99, effective 11/3/99; Order 74-24, § 296-79-290, filed 5/6/74; Order 70-6, § 296-79-290, filed 7/10/70, effective 8/10/70.]

WAC 296-79-29001 Digester valves and piping. (1) The blow valve of a digester must be arranged so as to be operated from another room, remote from safety valves.

(2) Heavy duty pipe, valves, and fittings must be used between the digester and blow pit, blowtanks and dumptanks. These valves, fittings, and pipes must be inspected at least semiannually to determine the degree of deterioration and should be replaced when necessary.

(3) Digester blow valves or controls must be pinned or locked in closed position throughout the entire cooking period.

(4) Test holes in blow lines of piping systems must not be covered with insulation or other materials.

[Statutory Authority: RCW 49.17.010, [49.17].040 and [49.17].050. 99-16-083, § 296-79-29001, filed 8/3/99, effective 11/3/99; Order 74-24, § 296-79-29001, filed 5/6/74.]

WAC 296-79-29003 Warning of digester being blown. (1) Procedures must be developed to ensure that digester operators are aware of personnel entering hazardous areas.

• Audible warning signals and red warning lights must be installed in areas which may be hazardous to personnel while digesters are being blown.

• Such devices must be activated prior to blowing a digester and the warning lights must remain lighted as long as the hazard exists.

(2) Blowing digester. Blow-off valves must be opened slowly.

(3) After the digester has started to be blown, the blow-off valve must be left open, and the hand plate must not be removed until the person responsible signals the blow-pit person that the blow is completed. Whenever it becomes necessary to remove the hand plate to clear stock, operators must wear eye protection equipment and protective clothing to guard against burns from hot stock.

(4) Blow-pit hoops must be maintained in a safe condition.

(5) Where the processes of the sulfate and soda operations are similar to those of the sulfite processes, the standard of WAC 296-79-29001 and 296-79-29003, of this chapter, applies to both processes.

(6) Means must be provided so the digester cook can signal the employee in the chip bin before starting to load the digester.

[Statutory Authority: RCW 49.17.010, [49.17].040 and [49.17].050. 99-16-083, § 296-79-29003, filed 8/3/99, effective 11/3/99; Order 77-12, § 296-79-29003, filed 7/11/77; Order 76-7, § 296-79-29003, filed 3/1/76; Order 74-24, § 296-79-29003, filed 5/6/74.]

WAC 296-79-29005 Unplugging quick lime stoppages. Water must not be used to unplug quick lime stops or plugs in pipes or confined spaces.

[Statutory Authority: RCW 49.17.010, [49.17].040 and [49.17].050. 99-16-083, § 296-79-29005, filed 8/3/99, effective 11/3/99; Order 74-24, § 296-79-29005, filed 5/6/74.]

WAC 296-79-29007 Bleach plant. (1) Work areas used for preparation and processing of bleaching mixtures must be equipped with properly designed exhaust ventilation systems capable of clearing the area of toxic gases. See chapter 296-62 WAC, Part H and Part L.

(2) Bleaching containers, such as cells, towers, etc., except the Bellmer type, must be completely covered on the top, with the exception of one small opening large enough to allow filling but too small to admit a person.

[Statutory Authority: RCW 49.17.010, [49.17].040 and [49.17].050. 99-16-083, § 296-79-29007, filed 8/3/99, effective 11/3/99; Order 74-24, § 296-79-29007, filed 5/6/74.]

WAC 296-79-29009 Audible alarm in bleach plant. An audible alarm system must be installed and it must be activated whenever a serious leak or break develops in the bleach plant area which creates a health or fire hazard.

[Statutory Authority: RCW 49.17.010, [49.17].040 and [49.17].050. 99-16-083, § 296-79-29009, filed 8/3/99, effective 11/3/99; Order 74-24, § 296-79-29009, filed 5/6/74.]

WAC 296-79-29011 Pocket grinder doors. Doors of pocket grinders must be so designed and arranged as to keep them from closing accidentally.

[Statutory Authority: RCW 49.17.010, [49.17].040 and [49.17].050. 99-16-083, § 296-79-29011, filed 8/3/99, effective 11/3/99; Order 74-24, § 296-79-29011, filed 5/6/74.]

WAC 296-79-29013 Pulping device procedures. Each company must develop a safe procedure which shall be followed for feeding, clearing jams, or removing foreign objects from any pulping device. These procedures must comply with applicable provisions of this standard.

[Statutory Authority: RCW 49.17.010, [49.17].040 and [49.17].050. 99-16-083, § 296-79-29013, filed 8/3/99, effective 11/3/99; Order 74-24, § 296-79-29013, filed 5/6/74.]

WAC 296-79-29015 Off machine repulping devices. (1) When fed manually from the floor above, conveniently located emergency stop devices must be provided at the top level.

(2) When fed from floor above:

• The chute opening, if less than standard guardrail height from the feed platform or floor, must be provided with a complete guardrail or other enclosure to standard guardrail height.

• Openings for manual feeding must be sufficient only for entry of stock and must be provided with at least two permanently secured crossrails, in accordance with, the general safety and health standards, WAC 296-24-75003.

[Statutory Authority: RCW 49.17.010, [49.17].040 and [49.17].050. 99-16-083, § 296-79-29015, filed 8/3/99, effective 11/3/99; Order 74-24, § 296-79-29015, filed 5/6/74.]

WAC 296-79-29017 Pulping device cleaning, inspection and repairing. When cleaning, inspecting or performing other work that requires that persons enter pulping devices, all control devices must be locked or tagged out in accordance with the requirements of this standard.

[Statutory Authority: RCW 49.17.010, [49.17].040 and [49.17].050. 99-16-083, § 296-79-29017, filed 8/3/99, effective 11/3/99; Order 74-24, § 296-79-29017, filed 5/6/74.]

WAC 296-79-29021 Shredders and blowers. (1) On manually fed broke shredders, the feed table must be of a height and distance from the knives as to prevent the operator from reaching or falling into the knives or the operator must be safeguarded by other acceptable means.

(2) A smooth-pivoted idler roll resting on the stock or feed table must be provided in front of feed rolls except when arrangements prevent the operator from standing closer than 36 inches to any part of the feed rolls.

(3) Any manually fed cutter, shredder, or duster must be provided with an idler roll as specified in (2) of this section or the operator shall use special hand-feeding tools.

(4) Blowers used for transporting materials must be provided with feed hoppers having outer edges located not less than 48 inches from the fan.

(5) The blower discharge outlets and work areas must be arranged to prevent material from falling on workers.

[Statutory Authority: RCW 49.17.010, [49.17].040 and [49.17].050. 99-16-083, § 296-79-29021, filed 8/3/99, effective 11/3/99; Order 74-24, § 296-79-29021, filed 5/6/74.]

WAC 296-79-29023 Clearing shredder jams. To clear jams or blockage to the machine, the operator must use objects which will not create a hazard. The use of metal bars for such purposes is prohibited.

[Statutory Authority: RCW 49.17.010, [49.17].040 and [49.17].050. 99-16-083, § 296-79-29023, filed 8/3/99, effective 11/3/99; Order 74-24, § 296-79-29023, filed 5/6/74.]

WAC 296-79-29027 Guillotine type roll splitters. (1) The engaging control for activating the guillotine blade must be a "deadman type" switch that demands continuous operator activation and must be:

• A positive two-hand operating control, or

• Located far enough from the cutting location so that the operator cannot reach the blade during the cutting process.

(2) Personnel must not position any part of the body under the blade.

(3) Rolls must be in the horizontal position while being split.

(4) Rolls must be centered directly below the blade.

[Statutory Authority: RCW 49.17.010, [49.17].040 and [49.17].050. 99-16-083, § 296-79-29027, filed 8/3/99, effective 11/3/99; Order 76-7, § 296-79-29027, filed 3/1/76; Order 74-24, § 296-79-29027, filed 5/6/74.]

WAC 296-79-29029 Broke hole. (1) An alarm bell or flashing light must be actuated or other suitable warning must be given before dropping material through a broke hole when persons working below may be endangered.

(2) Broke holes must be guarded to the fullest extent possible consistent with operational necessities. The degree of guarding provided by standard height and strength guardrails will be considered as a minimum acceptable level of protection.

(3) When repulping devices or feed conveyor systems for repulping devices are located beneath broke holes, special precautions must be used.

• The broke hole opening must be reduced to the smallest practical dimension.

• If the broke hole opening is large enough to permit a worker to fall through and is not guarded at least to the equivalent degree of protection provided by standard guardrails, any employee pushing broke down the broke hole must wear a safety belt or harness attached to a lanyard, and

• The lanyard must be fastened in such a manner that it is impossible for the person to fall into the repulping device.

(4) Guarding to the equivalent degree of protection provided by standard guardrails and meeting the requirements of

subsections (2) and (3), may be achieved by the use of guard bars separated no more than 15-1/2 inches in a vertical plane and 12 inches in a horizontal plane, or any other location within that segment.

[Statutory Authority: RCW 49.17.010, [49.17].040 and [49.17].050. 99-16-083, § 296-79-29029, filed 8/3/99, effective 11/3/99. Statutory Authority: RCW 49.17.040, 49.17.240, and chapters 43.22 and 42.30 RCW. 81-03-007 (Order 80-31), § 296-79-29029, filed 1/8/81; Order 74-24, § 296-79-29029, filed 5/6/74.]

WAC 296-79-29031 Industrial kiln guns and ammunition. The employer must ensure that there are written instructions, including safety procedures, for storing and operating industrial kiln guns and ammunition. All personnel working with this equipment must be instructed in these procedures and must follow them.

[Statutory Authority: RCW 49.17.010, [49.17].040 and [49.17].050. 99-16-083, § 296-79-29031, filed 8/3/99, effective 11/3/99; Order 74-24, § 296-79-29031, filed 5/6/74.]

WAC 296-79-29033 Chlorine dioxide system. See chapter 296-62 WAC, Part P and chapter 296-67 WAC, process safety management.

(1) Sodium chlorate.

(a) Personnel handling and working with sodium chlorate must be thoroughly instructed in precautions to be used in handling and special work habits.

(b) Facilities for storage and handling of sodium chlorate must be constructed so as to eliminate possible contact of dry or evaporated sodium chlorate with wood or other material which could cause a fire or explosion.

(c) Sodium chlorate facilities should be constructed with a minimum of packing glands, stuffing boxes, etc.

(2) Chlorine dioxide.

Chlorine dioxide generating and storage facilities must be placed in areas which are adequately ventilated and are easily kept clean of wood, paper, pulp, etc., to avoid contamination which might cause a reaction. This can be accomplished by placing these facilities in a separate room or in a designated outside space.

(3) General.

(a) Facilities handling sodium chlorate and chlorine dioxide must be declared "no smoking" areas and must have signs posted accordingly.

(b) Management shall be responsible for developing written instructions including safety procedures for operating and maintaining the generator and associated equipment. All personnel working on this equipment must be thoroughly trained in these procedures and must follow them. A periodic review of these procedures is recommended.

[Statutory Authority: RCW 49.17.010, [49.17].040 and [49.17].050. 99-16-083, § 296-79-29033, filed 8/3/99, effective 11/3/99; Order 74-24, § 296-79-29033, filed 5/6/74.]

WAC 296-79-29035 Piling and unpiling pulp. (1) Piles of wet lap pulp (unless palletized) must be stepped back one-half the width of the sheet for each 8 feet of pile height. Sheets of pulp must be interlapped to make the pile secure. Pulp must not be piled over pipelines to jeopardize pipes, or so as to cause overloading of floors, or to within 18 inches below sprinkler heads.

(2) Piles of pulp must not be undermined when being unpiled.

(3) Floor capacities must be clearly marked on all floors.

(4) When sprinklers are used for fire protection in the storage area, baled paper and rags must be stored in stable piles which do not extend into the area necessary for the proper function of sprinkler systems.

[Statutory Authority: RCW 49.17.010, [49.17].040 and [49.17].050. 99-16-083, § 296-79-29035, filed 8/3/99, effective 11/3/99; Order 76-7, § 296-79-29035, filed 3/1/76; Order 74-24, § 296-79-29035, filed 5/6/74.]

WAC 296-79-29037 Chocking rolls. Rolls must be secured by chocks or other means to prevent movement when stored horizontally.

[Statutory Authority: RCW 49.17.010, [49.17].040 and [49.17].050. 99-16-083, § 296-79-29037, filed 8/3/99, effective 11/3/99; Order 74-24, § 296-79-29037, filed 5/6/74.]

WAC 296-79-300 Machine room equipment and procedures. (1) Pulp and paper machines must be equipped with emergency stopping control(s) which can be actuated quickly from all normal operating stations. If useful for the safety of personnel, the stopping control(s) must be interlocked with adequate retarding or braking action to stop the machine as quickly as is practical. The devices must consist of push buttons for electric motive power (or electrically operated engine stops), pull cords connected directly to the prime mover, control clutches, or other devices.

(2) Steps and footwalks along the fourdrinier/forming and press section must have nonslip surfacing and be complete with standard handrails, when practical.

(3) If a machine must be lubricated while in operation an automatic lubricating device must be provided or oil cups and grease fittings must be provided which can be serviced safely without exposing the worker to any hazards.

(4) All levers carrying weights must be so constructed that weights will not slip or fall off.

(5) Guarding inrunning nip points.

(a) The drums on pulp and paper machine winders.

(i) These drums must be provided with suitable guards to prevent a person from being caught between the roll and the front drum on the winder when the pinch point is on the operator's side.

(ii) Such guards must be interlocked with the drive mechanism to prevent the winder from running while the guard is not in place. Except that the winder may be wired to allow it to run at thread or jog speed only for adjustment and start up purposes while the guard is not in position.

(iii) A zero speed switch or locking device must be installed to prevent the guard from being removed while the roll is turning above thread or jog speed.

(b) Rewinders.

When rewinding large rolls and the nip point is adjacent to the normal work area.

• The nip point must be protected by a barrier guard and

• Such guard must be interlocked with the drive mechanism to prevent operating the machine above thread or jog speed without the guard in place and

• A zero speed switch must be installed to prevent the guard from being raised while the roll is turning.

(c) Inrunning nips where paper is not being fed into a calender must be guarded.

(6) An audible alarm must be sounded prior to starting up any section of a pulp or paper machine. Sufficient time must be allowed between activation of the alarm system and start up of the equipment to allow any persons to clear the hazardous area.

(7) When starting up a dryer section, steam to heat the drums must be introduced slowly and while the drums are revolving.

(8) A safe method must be used when starting paper into the nip of drum type reels or calender stacks. This may be accomplished by the use of feeder belts, carrier ropes, air carriage or other device or instrument.

• A rope carrying system should be used wherever possible at points of transfer, or

• Sheaves should be spaced so that they do not create a nip point with each other and the sheave and its support should be capable of withstanding the speed and breaking strength of the rope for which they are intended.

(9) Employees must not feed a stack with any hand held device which is capable of going through the nip.

(10) Employees must not attempt to remove a broken carrier rope from a dryer while the section is running at operating speed.

(11) Employees must stop the dryer to remove a wrap except in cases where it can be safely removed by using air or other safe means.

(12) To remove deposits from rolls, a specially designed scraper or tool shall be used. Scraping of rolls must be performed on the outgoing nip side.

(13) Doctor blades.

(a) Cleaning. Employees must not place their hands between the sharp edge of an unloaded doctor blade and the roll while cleaning the doctor blade.

(b) Doctor blades must have the sharp edges properly guarded during transportation and storage.

(c) Special protective gloves must be provided and must be worn by employees when filing or handling sharp edged doctor blades.

(14) Handling reels.

(a) Reels must stop rotating before being lifted away from reel frame.

Crane hooks must not be used to stop a turning reel.

(b) Exposed rotating reel shafts with square block ends must be guarded.

(c) The crane operator must ascertain that reels are properly seated at winder stand or at reel arms before they disengage the hooks.

(d) On stored reels, a clearance of at least 8 inches between the reels of paper must be maintained.

(15) All winder shafts must be equipped with a winder collar guide. The winder must have a guide rail to align the shaft for easy entrance into the opened rewind shaft bearing housing. If winder shafts are too heavy for manual handling, mechanical equipment must be used.

(16) Shaftless winders must be provided with a barrier guard of sufficient strength and size to confine the rolls in the event they become dislodged while running.

(17) All calender stacks and spreader bars must be grounded according to chapter 296-24 WAC, Part L, and WAC 296-800-280 as protection against shock induced by static electricity.

(18) Nonskid type surface required.

(a) All exposed sole plates between dryers, calenders, reels, and rewinders must have a nonskid type surface.

(b) A nonskid type surface must be provided in the work areas around the winders or rewinders.

(19) If a powered roll ejector is used it should be interlocked to prevent accidental actuation until the receiving platform or roll lowering table is in position to receive the roll.

(20) Employees must keep clear of hazardous areas around the lowerator, especially all lowerator openings in a floor and where roll is being discharged.

(21) Provision must be made to hold the rider roll when in a raised position unless counterbalancing eliminates the hazard.

(22) Drain openings in pits. Flush floor drain openings larger than 3 inches in diameter in the bottom of pits must be guarded to prevent workers from stepping through, while working in this area.

(23) Employees must not enter into or climb on any paper machine roll that is subject to free turning unless a positive locking device has been installed to prevent the roll from turning.

(24) The employer must ensure sufficient inspection and nondestructive examination of reel spool and calender roll journals. The type and frequency of testing must be adequate to detect indications of failure. Any reel spool or calender roll journal found to have an indication of failure must be removed from service. Nondestructive examination personnel must be qualified in accordance with SNT-TC 1A.

[Statutory Authority: RCW 49.17.010, [49.17].040, and [49.17].050. 01-11-038, § 296-79-300, filed 5/9/01, effective 9/1/01; 99-16-083, § 296-79-300, filed 8/3/99, effective 11/3/99. Statutory Authority: Chapter 49.17 RCW. 91-24-017 (Order 91-07), § 296-79-300, filed 11/22/91, effective 12/24/91. Statutory Authority: RCW 49.17.040, 49.17.240, and chapters 43.22 and 42.30 RCW. 81-03-007 (Order 80-31), § 296-79-300, filed 1/8/81; Order 76-7, § 296-79-300, filed 3/1/76; Order 74-24, § 296-79-300, filed 5/6/74; Order 70-6, § 296-79-300, filed 7/10/70, effective 8/10/70.]

WAC 296-79-310 Converting operations (bag and container manufacturing, printing, coating, finishing and related processes).

[Statutory Authority: RCW 49.17.010, [49.17].040 and [49.17].050. 99-16-083, § 296-79-310, filed 8/3/99, effective 11/3/99; Order 74-24, § 296-79-310, filed 5/6/74; Order 70-6, § 296-79-310, filed 7/10/70, effective 8/10/70.]

WAC 296-79-31001 General requirements for converting operations (bag and container manufacturing, printing, coating, finishing and related processes). (1) Guillotine-type trimmers must be designed in a manner which will require the operator to use both hands simultaneously to activate the cutting blade. If machine helpers are employed in the control function of the cutter, separate two-hand controls must be provided for the control function performed by the helper.

(2) Guillotine-type trimmers must be designed in a manner that the trimming blade will not repeat unless manually reactivated.

(3) Sorting and counting tables must be smooth and free from splinters, with edges and corners rounded.

Paddles must be smooth and free from splinters.

(4) Devices (i.e., mirrors) must be installed to assist the converting machine operator in viewing blind work stations where a hazard exists.

(5) Mechanical lifting devices must be provided for placing and removing rolls from rewinders. Rolls must not be left suspended overhead while the controls are unattended.

(6) When using a crane or hoist to place rolls into a backstand and the operator cannot see both ends of the backstand, assistance will be provided or appropriate devices will be installed to eliminate the hazards involved. The operator must ascertain that rolls are properly seated at winder stand or at roll arms before disengaging the hooks.

(7) Slitters, slotters, and scorers not in use must be properly stored so a hazard is not created.

(8) All power closing sections must be equipped with an audible warning system which will be activated when closing the sections.

(9) Roll-type embosser. The nipping point located on the operator's side must be guarded by either automatic or manually operated barrier guards interlocked with the drive.

[Statutory Authority: RCW 49.17.010, [49.17].040 and [49.17].050. 99-16-083, § 296-79-31001, filed 8/3/99, effective 11/3/99; Order 76-7, § 296-79-31001, filed 3/1/76; Order 74-24, § 296-79-31001, filed 5/6/74.]

WAC 296-79-31003 Corrugator. (1) Every recessed floor conveyor system must be identified by standard color coding, and so designed and installed to minimize tripping hazards.

(2) All areas subject to wet processes must be provided with drains.

• Drain trenches must be provided with gratings flush with the adjoining floor.

• Use of curbing in work areas should be avoided in new installations. If the use of curbing cannot be avoided, the design must be such that the curbs do not constitute a tripping hazard in normal working areas. When curbing exists and constitutes a hazard, it must be color coded.

(3) Rails of rail mounted devices such as roll stands must be flush with the adjacent floor, and so installed to provide a minimum of 18 inches clearance between the equipment and walls or other fixed objects.

(4) All corrugating and pressure rolls must be equipped with appropriately designed and installed threading guides so as to prevent contact with the infeed nip of the various rolls by the operator.

(5) A minimum of 4 inches clearance or effective nip guarding must be maintained between heated drums, idler rolls, and cross shafting on all preheaters and preconditioners.

(6) Lower elevating conveyor belt rolls on the single facer bridge must have a minimum nip clearance of 4 inches or effective nip guarding.

(7) Web shears at the discharge end of the double facer must be equipped with barrier type guards.

(8) Slitter stations not in use must be disconnected from the power source by positive means.

(9) Elevating type conveyors must have the floor area color-coded.

[Statutory Authority: RCW 49.17.010, [49.17].040 and [49.17].050. 99-16-083, § 296-79-31003, filed 8/3/99, effective 11/3/99; Order 74-24, § 296-79-31003, filed 5/6/74.]

WAC 296-79-31009 Die cutting. Bobst type die cutters.

A minimum of 4 inches must be provided between the end of the slat and the guide bar.

[Statutory Authority: RCW 49.17.010, [49.17].040 and [49.17].050. 99-16-083, § 296-79-31009, filed 8/3/99, effective 11/3/99; Order 74-24, § 296-79-31009, filed 5/6/74.]

WAC 296-79-320 Sulfite recovery furnace area requirements. (1) The employer must have a program to train all personnel associated with recovery boiler operations in safe operating procedures and emergency shutdown procedures.

(2) An audible warning system must be installed in kraft and soda base sulfite recovery furnace areas and must be actuated whenever an emergency exists.

(3) All personnel who enter the recovery furnace area must understand the emergency evacuation procedure.

(4) Warning system maintenance. Emergency warning systems in the recovery furnace areas must be kept in proper working condition and must be tested or checked weekly.

(5) Personnel must stand to the side while opening a furnace or boiler firebox door.

[Statutory Authority: RCW 49.17.010, [49.17].040 and [49.17].050. 99-16-083, § 296-79-320, filed 8/3/99, effective 11/3/99; Order 74-24, § 296-79-320, filed 5/6/74; Order 70-6, § 296-79-320, filed 7/10/70, effective 8/10/70.]

Chapter 296-96 WAC

SAFETY REGULATIONS AND FEES FOR ALL ELEVATORS, DUMBWAITERS, ESCALATORS AND OTHER CONVEYANCES

(Formerly chapters 296-81, 296-82, 296-84, 296-85, 296-87, 296-89, 296-91, 296-93A, 296-94, 296-95, and 296-100 WAC)

WAC

PART A - ADMINISTRATIVE

296-96-00500 Scope, purpose, and authority.
296-96-00600 What rules apply to your conveyance?
296-96-00650 Which National Elevator Codes and Supplements has the department adopted?
296-96-00700 Chapter definitions.
296-96-00800 Advisory committee on conveyances.
296-96-00805 Appeal rights and hearings.

PART B - LICENSES AND FEES FOR ALL ELEVATORS, DUMBWAITERS, ESCALATORS AND OTHER CONVEYANCES

NOTE: Total fees include the sum of the permit cost plus plan check fees.

296-96-00900 In general, who is required to be licensed under this chapter?
296-96-00902 Are there exceptions from the elevator mechanic licensing requirements?
296-96-00903 Are there exceptions from the elevator contractor licensing requirements?
296-96-00904 What must you do to become and remain a licensed elevator contractor?
296-96-00906 What must you do to become a licensed elevator mechanic?
296-96-00910 What are the elevator mechanic license categories?
296-96-00912 How long is the elevator contractor, elevator mechanic, and temporary mechanics licensing period and what is required for renewal?

296-96-00914 Where can you obtain information regarding department-approved continuing education course providers?
296-96-00916 Who approves and what is the process for becoming a continuing education course provider?
296-96-00918 Who is exempt from the continuing education requirements?
296-96-00920 When and where are elevator licensing examinations held?
296-96-00922 What are the fees associated with licensing?
296-96-00924 What procedures does the department follow when issuing a civil penalty for licensing violations?
296-96-00926 What are the civil (monetary) penalties for violating the licensing requirements of chapter 70.87 RCW or this chapter?
296-96-00930 What if I owe outstanding final judgments to the department?

PART B-1 - REGULATIONS AND FEES FOR ALL ELEVATORS, DUMBWAITERS, ESCALATORS AND OTHER CONVEYANCES

296-96-01000 What is the permit process for conveyances?
296-96-01005 When do I need a permit?
296-96-01006 What type of conveyance work requires permitting and inspection?
296-96-01007 What is the inspection and approval process for alterations?
296-96-01009 Who can purchase a permit?
296-96-01010 What are the installation permit fees for conveyances, material lifts, and hoists and how are they calculated?
296-96-01012 What are the permit fees for alterations to conveyances, material lifts, and hoists and how are they calculated?
296-96-01025 What is the permit fee for personnel and material hoists?
296-96-01027 Are initial installation permit fees refundable?
296-96-01030 What is the process for installation and alteration plan approval?
296-96-01035 Are there inspection fees?
296-96-01040 What is the fee for testing and inspecting regular elevators used as temporary elevators to provide transportation for construction personnel, tools, and materials only?
296-96-01045 What are the inspection requirements and fees for conveyances in private residences?
296-96-01050 How do I get a supplemental inspection?
296-96-01055 Are technical services available and what is the fee?
296-96-01060 Can I request an after hours inspection and what is the fee?
296-96-01065 What are the annual operating permits fees?
296-96-01070 What are the civil (monetary) penalties for violating the conveyance permit and operation requirements of chapter 70.87 RCW and this chapter?
296-96-01075 How does an owner or licensee receive a variance from the installation and alteration requirements of chapter 70.87 RCW and this chapter?

PART C - REGULATIONS FOR NEW AND ALTERED ELEVATORS AND LIFTING DEVICES

NOTE: The following rules set the minimum standard for all new installations and, where applicable, alterations.

296-96-02230 When must the department be notified for a new or altered inspection?
296-96-02232 What are the conditions for obtaining a temporary operating permit?
296-96-02235 What are the requirements for temporary operating permits?
296-96-02240 Where is a shut-off valve required for hydraulic elevators?
296-96-02275 What are the requirements for Fireman's Service Phase I and Phase II recall?
296-96-02276 What are the requirements for sprinklers in hoistways and machine rooms?
296-96-02277 How does the department enforce ASME requirements for sprinklers, smoke detectors, and heat detectors in hoistways and machine rooms?
296-96-02278 Are keys required to be onsite?
296-96-02280 Can pipes and ducts be installed above a machine room?
296-96-02281 What is required for emergency escape hatches?
296-96-02282 What is required for fire fighters' service?
296-96-02283 What is the minimum working space required in machine rooms?
296-96-02285 Are there exceptions for correction facility elevators?
296-96-02290 What are the requirements for underground hydraulic elevator pipes, fittings, and cylinders?
296-96-02300 Are self-leveling devices required?
296-96-02306 Is a door reopening device required on automatic-closing car doors?
296-96-02310 What is the minimum acceptable initial transfer time for an elevator door?
296-96-02315 What are the minimum cab size and other applicable requirements for car interiors?
296-96-02317 When does the department require a local building official to sign off for the installation of LULAs, stair lifts, inclined wheelchair lifts and vertical wheelchair lifts?
296-96-02318 What are the general requirements for LULA elevators?
296-96-02320 What is required for car controls?
296-96-02325 What are the location and operation requirements for car position indicators in the car?
296-96-02330 What is required for installation and operation of emergency communication systems?
296-96-02340 What requirements apply to the size and location of car handrails?
296-96-02350 What requirements apply to floor designations on elevator door jambs?
296-96-02355 What are the installation and operation requirements for hall buttons?
296-96-02360 What are the requirements for installation and operation of hall lanterns?
296-96-02361 What are the requirements for electrical main line disconnects?
296-96-02362 What are the requirements associated with elevator machine rooms?
296-96-02363 What are the requirements for fire doors installed in front of hoistway doors?
296-96-02364 What are the requirements for accessing elevated elevator pit equipment?
296-96-02366 What are the requirements for submersible pumps or sumps?
296-96-02367 What are the requirements for top of car lighting for freight and passenger elevators?
296-96-02370 What is required for physically handicapped lifts?
296-96-02371 Are private residence inclined stairway chairlifts required to be permanently wired?

PART C1 - MINIMUM STANDARDS FOR ALL MATERIAL LIFTS

296-96-05010 What are the department's rules on material lifts?
296-96-05020 What requirements apply to the construction and fire safety of hoistway enclosures?
296-96-05030 What are the construction requirements for hoistway enclosure gates and doors?
296-96-05040 What requirements apply to a hoistway that does not extend to the lowest levels of a building or structure?
296-96-05050 What requirements apply to lift hoist driving machines?
296-96-05070 What car enclosure requirements apply to lifts?
296-96-05080 How much running clearance is permitted between a car sill and a hoistway?
296-96-05090 What requirements apply to car and counterweight guides?
296-96-05100 How much weight can be placed on a car frame and platform during loading and unloading?
296-96-05120 What requirements apply to car operating devices, terminal stopping devices and electrical protective devices?
296-96-05140 What requirements apply to car safeties?
296-96-05150 What requirements apply to lift brakes?
296-96-05160 What types of ropes, chains, and rope connections must be used on a lift?
296-96-05170 What requirements apply to lift control stations?
296-96-05190 How must lift pits be constructed?
296-96-05200 Which lift landings must be illuminated?
296-96-05210 What signs must be posted on landings and lifts?
296-96-05220 What electrical wiring standards apply to lifts?
296-96-05230 What safety regulations apply to exposed equipment?
296-96-05240 What are the minimum maintenance requirements for lifts?
296-96-05260 When are inspections required?
296-96-05290 Under what conditions is a five-year test administered?

PART C2 - CONSTRUCTION, OPERATION, MAINTENANCE AND INSPECTION OF INCLINED PRIVATE RESIDENCE ELEVATOR FOR TRANSPORTING PERSON(S) FOR RESIDENTIAL USE

296-96-07010 What is the scope of Part C-2?

296-96-07020 What is the definition for inclined private residence elevator?
296-96-07021 What are the requirements for existing inclined private residence elevators?
296-96-07024 What rules apply to alterations of inclined private residence elevators?
296-96-07030 Does the department approve private residence elevator plans and specifications?
296-96-07035 What are the minimum maintenance requirements for inclined private residence elevators?
296-96-07040 What are the clearance requirements for an incline runway?
296-96-07050 What are the construction requirements for car landing enclosures and gates for inclined private residence elevators?
296-96-07060 What types of bumpers and buffers must be installed on inclined private residence elevators?
296-96-07070 What are the requirements for machinery beams and supports?
296-96-07080 What are the load and size requirements for car platforms?
296-96-07090 What is the maximum rated speed of an incline elevator?
296-96-07100 What construction requirements apply to inclined private residence elevators?
296-96-07110 What construction requirements apply to car enclosures?
296-96-07120 What construction requirements apply to car doors and gates?
296-96-07130 What type of glass or plastic can be used in a car enclosure?
296-96-07140 Are capacity and data plates required?
296-96-07150 What are the construction requirements for guide rails, track supports and fastenings?
296-96-07160 What construction requirements apply to counterweights?
296-96-07170 What are the requirements of safeties and governors?
296-96-07171 How and when are safeties and governors tested?
296-96-07180 What are the construction requirements for driving machines and sheaves?
296-96-07190 What construction requirements apply to terminal stopping switches?
296-96-07200 What are the requirements for operation of an inclined private residence elevator?
296-96-07210 What are the construction requirements for suspension methods?
296-96-07215 What are the requirements for controllers?
296-96-07220 What are the requirements for traveling cables?
296-96-07230 What requirements apply to electrical wiring?
296-96-07240 What are the requirements for track supporting structures?
296-96-07250 What additional requirements apply to inclined private residence elevators?

PART C3 - CONSTRUCTION, OPERATION, MAINTENANCE AND INSPECTION OF PRIVATE RESIDENCE CONVEYANCES FOR TRANSPORTING PROPERTY FOR RESIDENTIAL USE

296-96-08010 What is the scope of Part C-3?
296-96-08020 What is the definition for inclined private residence conveyances for transporting property?
296-96-08022 What are the requirements for existing inclined private residence conveyances for transporting property?
296-96-08024 What rules apply to alterations of inclined private residence conveyances for transporting property?
296-96-08030 Does the department approve elevators plans and specifications for inclined private residence conveyances for transporting property?
296-96-08035 What are the minimum maintenance requirements for inclined private residence elevators for transporting property?
296-96-08050 What are the construction requirements for inclined private residence conveyances for transporting property for cars, landing gates, and enclosures?
296-96-08060 What types of bumpers and buffers must be installed on inclined private residence conveyances for transporting property?
296-96-08070 What are the requirements for machinery beams and supports?
296-96-08080 What are the load and size requirements for car platforms?
296-96-08090 What is the maximum rated speed of an inclined conveyance?
296-96-08100 What requirements apply to inclined conveyance?
296-96-08110 What requirements apply to car enclosures?
296-96-08140 Are capacity and data plates required on inclined private residence conveyances for transporting property?
296-96-08150 What are the requirements for guide rails, track supports and fastenings?
296-96-08160 What requirements apply to counterweights?
296-96-08170 What are the requirements of safeties and governors?
296-96-08175 How and when are conveyance safeties tested?
296-96-08180 What are the requirements for driving machines and sheaves?
296-96-08190 What requirements apply to terminal stopping switches?
296-96-08200 What are the requirements for the activation and operation of an inclined private residence conveyances for transporting property?
296-96-08210 What are the requirements for suspension methods?
296-96-08215 What are the requirements for controllers?
296-96-08220 What are the requirements for traveling cables?
296-96-08230 What requirements apply to electrical wiring?
296-96-08240 What are the requirements for track supporting structures?
296-96-08250 What additional requirements apply to inclined private residence conveyances for transporting property?

PART C4 - TEMPORARY HOISTS

Personnel Hoists

296-96-09001 What regulations apply to personnel hoists?
296-96-09002 May a drop plate be used for temporary hoists?
296-96-09003 What are the requirements for landing gates?
296-96-09004 Do jumps (increased travel) have to be inspected?

Material Hoists

296-96-10001 What regulations apply to material hoists?
296-96-10002 Do jumps (increased travel) have to be inspected?

PART C5 - ADDITIONAL TYPES OF CONVEYANCES

Belt Manlifts

296-96-11001 What regulations apply to belt manlifts?
296-96-11010 What are the definitions for belt manlifts?
296-96-11016 What general requirements apply to belt manlift landings?
296-96-11019 What requirements apply to the guards and cones of belt manlift landings?
296-96-11022 What requirements apply to guarding lift entrances and exits?
296-96-11025 What structural requirements apply to floor opening guards?
296-96-11028 What structural requirements apply to floor landing guards?
296-96-11031 What requirements apply to bottom landings?
296-96-11034 What requirements apply to top clearance?
296-96-11037 What requirements apply to emergency exit ladders?
296-96-11040 What lighting requirements apply to belt manlifts?
296-96-11045 What drive machine requirements apply to belt manlifts?
296-96-11048 What is an acceptable operating speed for a belt manlift?
296-96-11051 What are the construction requirements for steps?
296-96-11054 What requirements apply to the location and construction of handholds?
296-96-11057 What requirements apply to "up-limit stops"?
296-96-11060 What requirements apply to emergency stops?
296-96-11066 What are the warning sign requirements?
296-96-11070 Can you carry tools and materials on a belt manlift?
296-96-11078 What is required for belt manlift inspections?
296-96-11080 Under what conditions is a five-year test administered?

Electric Manlifts

296-96-13135 What are the requirements for electric manlifts?
296-96-13139 What structural requirements apply to hoistway enclosures and landings?
296-96-13143 What structural requirements apply to hoistway gates and doors?
296-96-13145 What structural requirements apply to elevator cars?
296-96-13147 What structural requirements apply to elevator doors?
296-96-13149 What are the structural requirements for counterweights, counterweight enclosures, and counterweight fastenings?
296-96-13151 What construction requirements apply to car guide rails?
296-96-13153 What construction requirements apply to hoisting ropes?
296-96-13155 What are the requirements for a hoistway space?

296-96-13157 What requirements apply to car safeties?
296-96-13159 What requirements apply to brakes?
296-96-13161 What requirements apply to car controls and safety devices?
296-96-13167 What requirements apply to elevator driving machines?
296-96-13169 What requirements apply to car and counterweight buffers?
296-96-13171 What other requirements apply to electric manlifts?

Hand-Powered Manlifts

296-96-14010 What is the scope and application of the department's hand-powered manlift rules?
296-96-14020 What construction requirements apply to hoistway landings and entrances?
296-96-14025 What are acceptable hoistway clearances?
296-96-14030 Can there be a habitable space beneath an elevator hoistway or counterweight shaft?
296-96-14035 What construction requirements apply to hoistway guide rails?
296-96-14040 What installation requirements apply to buffer springs?
296-96-14045 What construction specifications apply to hoistway cars?
296-96-14050 What are the requirements for assembly, installation, and operation of sectional counterweights?
296-96-14055 What is the minimum acceptable sheave diameter?
296-96-14060 What requirements apply to hoisting ropes?
296-96-14065 What requirements apply to operating ropes?
296-96-14070 Where must hoistway lights be located?
296-96-14075 What is the factor of safety for overhead supports?
296-96-14080 What additional requirements apply to the installation and operation of hand powered manlifts?

Casket Lifts

296-96-16010 What is the scope of the department's casket lift regulations?
296-96-16020 What requirements apply to the location and operation of machine rooms and machinery space?
296-96-16030 What equipment can be located in a machine room?
296-96-16040 What requirements apply to the location of electrical wiring, pipes and ducts in hoistways and machine rooms?
296-96-16050 Is a pit required in a casket lift hoistway?
296-96-16060 What requirements apply to the size and location of hoistway door openings?
296-96-16070 How must hoistway doors be hung?
296-96-16080 Where must hoistway doors be located?
296-96-16090 What requirements apply to hoistway doors locks?
296-96-16100 How should space beneath a hoistway be protected?
296-96-16110 What requirements apply to car doors and gates?
296-96-16120 What requirements apply to car enclosures?
296-96-16130 What requirements apply to the construction of car frames and platforms?
296-96-16140 How must car frames and platforms be connected?
296-96-16150 What is the load capacity of a casket lift car?
296-96-16160 What types of casket lift driving machines are allowed?
296-96-16170 What material and grooving is required for sheaves and drums?
296-96-16180 What types of brakes must be used on the driving machine?
296-96-16190 Where must terminal stopping devices be located?
296-96-16200 What are the specifications for casket lift ropes and rope connections?
296-96-16210 What specific requirements apply to hydraulic elevators?
296-96-16220 What requirements apply to valves, supply piping, and fittings?
296-96-16230 What type of stopping devices must be installed?
296-96-16240 What type of operating devices must be used?

Boat Launching Elevators

296-96-18010 What are the definitions for boat launching elevators?
296-96-18020 Must boat launching elevator cars and platforms be enclosed?
296-96-18030 What electrical wiring requirements apply to boat launching elevators?
296-96-18040 What type of brakes must be used on boat launching elevators?
296-96-18050 What types of stop switches and protective devices are required on boat launching elevators?
296-96-18060 When must hoisting cables be reshackled or refastened?
296-96-18070 What requirements apply to hoistway gates and doors?
296-96-18080 Must boat launching elevator hoistways be enclosed?

Mechanized Parking Garage Equipment

296-96-20005 What national safety codes has the department adopted for mechanized parking garage equipment?

PART D - REGULATIONS FOR EXISTING ELEVATORS, DUMBWAITERS, AND ESCALATORS

296-96-23100 Are keys required to be on-site?

Subpart I
Hoistways and Related Construction for Electric and Hydraulic Elevators

296-96-23101 What is the scope of Subpart I?

Section 1
Hoistways

296-96-23110 What structural requirements apply to hoistway enclosures?
296-96-23111 Are guards required for windows in hoistway enclosures?
296-96-23113 What are the requirements for pipes in hoistways that convey gases, vapors, or liquids?
296-96-23115 What safety requirements apply to inspecting and maintaining overhead sheaves?
296-96-23116 What requirements apply to car numbers?
296-96-23117 What requirements apply to top of car railings for traction elevators?
296-96-23118 What requirements apply to top of car railings for hydraulic elevators in unenclosed hoistways?
296-96-23119 What signage requirements apply to traction elevators with minimal overhead clearance?

Section 2
Machine Rooms and Machinery Spaces

296-96-23121 What are the requirements for machine room and machinery space access?
296-96-23122 What type of lighting must be installed in machine rooms and machinery space?
296-96-23123 What type of service outlets must be installed in elevator cars, hoistways and machinery spaces?
296-96-23124 What installation requirements apply to pipes conveying gases, vapors, or liquids in machine rooms and machinery spaces?
296-96-23125 Must elevator machines and control equipment be protected from the weather?
296-96-23126 What protective measures should be taken in hoistways, machine rooms and machinery spaces to insure safety?

Section 3
Pits

296-96-23130 What requirements apply to pit access?
296-96-23131 What requirements apply to pit drains?
296-96-23132 What lighting requirements apply to pits?
296-96-23133 What requirements apply to counterweight pit guards?

Section 4
Protection of Space Below Hoistways

296-96-23140 What requirements apply to any space below a hoistway that is not permanently protected from access?

Section 5
Hoistway Entrances

296-96-23150 Are hoistway doors (gates) required?
296-96-23151 What requirements apply to hoistway door closing devices?
296-96-23152 What requirements apply to hoistway door vision panels?
296-96-23153 What requirements apply to door hangers for horizontal slide doors?
296-96-23154 Are astragals required?
296-96-23155 What requirements apply to pull straps?
296-96-23156 What requirements apply to landing sill clearances?
296-96-23157 What is the maximum allowable threshold clearance?
296-96-23158 What requirements apply to elevator floor numbers?

Section 6
Hoistway Door Locking Devices, Parking Devices, and Access

296-96-23160 What requirements apply to hoistway door (gate) locking devices?
296-96-23161 What requirements apply to elevator parking devices?

296-96-23162 What requirements apply to hoistway door unlocking devices?

Section 7
Power Operation of Doors and Gates

296-96-23165 What requirements apply to reopening devices for power-operated car doors and gates?
296-96-23166 What requirements apply to photo electric or electric eye door reopening devices?

Subpart II
Machinery and Equipment for Electric Elevators

296-96-23200 What is the scope of Subpart II?

Section 1
Buffers and Bumpers

296-96-23203 What requirements apply to buffers and bumpers?

Section 2
Counterweights

296-96-23205 What requirements apply to counterweights?

Section 3
Car Frames and Platforms

296-96-23206 What requirements apply to car platforms and frames?
296-96-23207 What requirements apply to platform guards (aprons)?
296-96-23208 What requirements apply to hinged platform sills?
296-96-23209 What requirements apply to floating (movable) platforms?

Section 4
Car Enclosures

296-96-23215 What requirements apply to car enclosures?
296-96-23216 What requirements apply to the lining materials used on passenger car enclosures?
296-96-23220 What requirements apply to car doors and gates?
296-96-23221 What requirements apply to the location of car doors and gates?
296-96-23222 What control requirements apply to operating circuits?
296-96-23225 What requirements apply to car emergency exits?
296-96-23226 What requirements apply to car lighting?

Section 5
Safeties

296-96-23227 What requirements apply to car safeties?
296-96-23228 What is the maximum amount of governor rope movement allowed when operating a safety mechanism?
296-96-23229 What requirements apply to rail lubricants and lubrication plates?

Section 6
Speed Governors

296-96-23235 What requirements apply to speed governors?
296-96-23236 What requirements apply to speed governor overspeed and car safety mechanism switches?

Section 7
Capacity and Loading

296-96-23240 What is the minimum rated load for passenger elevators?
296-96-23241 What requirements apply to the use of partitions that reduce inside net platform area?
296-96-23243 What is the minimum rated load for freight elevators?
296-96-23244 What requirements apply to capacity plates?
296-96-23245 What requirements apply to signs on freight elevators?

Section 8
Driving Machines and Sheaves

296-96-23250 What general requirements apply to driving machines and sheaves?
296-96-23255 What requirements apply to winding drum machines?
296-96-23256 What requirements apply to indirect-drive machines?
296-96-23260 What requirements apply to driving machine brakes?
296-96-23261 What requirements apply to the application and release of driving machine brakes?

Section 9
Terminal Stopping Devices

296-96-23262 What requirements apply to normal terminal stopping devices?
296-96-23264 What requirements apply to final terminal-stopping devices?

Section 10
Operating Devices and Control Equipment

296-96-23266 What types of operating devices must not be used?
296-96-23268 What requirements apply to car-switch operation elevators?
296-96-23269 What requirements apply to passenger elevator emergency stop buttons?
296-96-23270 What requirements apply to car top operating devices?
296-96-23272 What electrical protective devices are required?
296-96-23274 What requirements apply to the power supply line disconnect?
296-96-23276 What requirements apply to phase reversal and failure protection methods?
296-96-23277 What requirements apply to grounding and overcurrent protections?
296-96-23278 What requirements apply to the absorption of regenerated power?
296-96-23279 What requirements apply to door by-pass systems?

Section 11
Emergency Operation and Signaling Devices

296-96-23280 What requirements apply to all car emergency signaling devices in all buildings?

Section 12
Suspension Systems and Their Connections

296-96-23282 What requirements apply to suspension systems?
296-96-23283 What requirements apply to rope data tags?
296-96-23284 What is the factor of safety for wire suspension ropes?
296-96-23285 What is the minimum number of suspension ropes allowed?
296-96-23287 What requirements apply to suspension rope equalizers?
296-96-23288 What requirements apply to securing suspension wire ropes to winding drums?
296-96-23289 What requirements apply to spare rope turns on winding drum machines?
296-96-23290 What requirements apply to suspension rope fastenings?
296-96-23291 What requirements apply to auxiliary rope fastening devices?

Subpart III
Hydraulic Elevators

296-96-23300 What is the scope of Subpart III, Hydraulic Elevators?

Section 1
Hoistways, Hoistway Enclosures, and Related Construction

296-96-23302 What requirements apply to hoistways, hoistway enclosures and related construction?
296-96-23303 What requirements apply to hydraulic elevators without safety bulkheads?

Section 2
Mechanical Equipment

296-96-23304 What requirements apply to buffers and bumpers?
296-96-23307 What requirements apply to car frames and platforms?
296-96-23309 What requirements apply to car enclosures?
296-96-23311 What requirements apply to capacity and loading?

Section 3
Driving Machines

296-96-23313 What requirements apply to driving machine connections?
296-96-23316 What requirements apply to plunger stops?

Section 4
Valves, Supply Piping, and Fittings

296-96-23318 What requirements apply to pump relief valves?
296-96-23321 What requirements apply to check valves?
296-96-23322 What requirements apply to supply piping and fittings?
296-96-23323 What requirements apply to flexible hydraulic connections?

Section 5
Tanks

296-96-23324 What general requirements apply to tanks?
296-96-23325 What requirements apply to pressure tanks?

Section 6
Terminal Stopping Devices

296-96-23326 What requirements apply to terminal stopping devices?

Section 7
Operating Devices and Control Equipment

296-96-23328 What requirements apply to operating devices?
296-96-23330 What requirements apply to car top operating devices?
296-96-23332 What requirements apply to anti-creep leveling devices?
296-96-23334 What requirements apply to electrical protective devices?
296-96-23336 What requirements apply to power supply line disconnects?
296-96-23338 What requirements apply to devices that make hoistway door interlocks or electric contacts and car door (gate) electric contacts inoperative?
296-96-23340 What requirements apply to control and operating circuits?
296-96-23342 What requirements apply to emergency operation and signaling devices?

Section 8
Additional Requirements for Counterweighted Hydraulic Elevators

296-96-23344 What additional requirements apply to counterweighted hydraulic elevators?

Subpart IV
Escalators

296-96-23400 What is the scope of Subpart IV, Escalators?

Section 1
Construction

296-96-23405 What requirements apply to balustrades?
296-96-23408 How much clearance is required between skirt panels and step treads?
296-96-23410 What requirements apply to guards at ceiling or soffit intersections?
296-96-23412 What requirements apply to anti-slide devices?
296-96-23414 What requirements apply to handrails?
296-96-23416 What requirements apply to handrail guards?
296-96-23418 What requirements apply to step riser slotting?
296-96-23420 What requirements apply to step tread slotting?
296-96-23422 What requirements apply to combplates?

Section 2
Brakes

296-96-23424 What general requirements apply to escalator brakes?
296-96-23427 What requirements apply to main drive shaft brakes?

Section 3
Operating and Safety Devices

296-96-23429 What requirements apply to starting switches?
296-96-23431 What requirements apply to emergency stop buttons?
296-96-23432 What requirements apply to speed governors?
296-96-23434 What requirements apply to broken step-chain devices?
296-96-23436 What requirements apply to brake applications?
296-96-23438 What requirements apply to broken drive-chain devices?
296-96-23440 What requirements apply to skirt obstruction devices?
296-96-23442 What requirements apply to rolling shutter devices?
296-96-23444 What requirements apply to reversal stop device?
296-96-23446 What requirements apply to tandem operations?
296-96-23448 What requirements apply to caution signs?

Section 4
Lighting of Step Treads

296-96-23450 What requirements apply to step tread lighting?

Subpart V
Dumbwaiters and Hand-Powered Elevators

296-96-23500 What is the scope of Subpart V, Dumbwaiters and Hand-powered elevators?
296-96-23510 What requirements apply to electric and electro-hydraulic dumbwaiters?
296-96-23540 What requirements apply to hand-power elevators and dumbwaiters?

Subpart VI
Alterations, Repairs and Maintenance

296-96-23600 What is the scope of Part VI, Alterations, Repairs and Maintenance?
296-96-23610 What requirements apply to routine periodic inspections and tests?
296-96-23620 What requirements apply to alterations, repairs and maintenance?
296-96-23630 What requirements apply to elevator equipment displaced by seismic activity?

Subpart VII
Lifts for Physically Handicapped

296-96-23700 What is the scope of Subpart VII, Lifts for Physically Handicapped?
296-96-23710 What requirements apply to lifts for the physically handicapped?

Subpart VIII
Sidewalk Elevators

296-96-23800 What is the scope of Subpart VIII, Sidewalk Elevators?
296-96-23810 What requirements apply to electrically-operated sidewalk elevators?

DISPOSITION OF SECTIONS FORMERLY CODIFIED IN THIS CHAPTER

296-96-01015 What are the permit fees for material lifts and how are they calculated? [Statutory Authority: RCW 70.87.020, 70.87.030, 70.87.034, 70.87.120, 70.87.185 and chapter 70.87 RCW. 01-02-026, § 296-96-01015, filed 12/22/00, effective 1/22/01.] Repealed by 02-12-022, filed 5/28/02, effective 6/28/02. Statutory Authority: RCW 43.22.350, 43.22.434, 43.22.480, 43.22.500, 18.27.040, 18.27.070, 18.27.075, 70.87.030, 19.28.041, 19.28.051, 19.28.101, 19.28.121, 19.28.161, 19.28.201, 19.28.211, 19.28.341, 2001 c 7, 2002 c 249, and chapters 19.28, 43.22, 18.27, and 70.87 RCW.

296-96-01080 How do you appeal a notice of violation? [Statutory Authority: RCW 70.87.020, 70.87.030, 70.87.034, 70.87.120, 70.87.185 and chapter 70.87 RCW. 01-02-026, § 296-96-01080, filed 12/22/00, effective 1/22/01.] Repealed by 04-12-047, filed 5/28/04, effective 6/30/04. Statutory Authority: RCW 70.87.020, 70.87.030, 70.87.034, 70.87.120, 70.87.185, 70.87.190, 2002 c 98, 2003 c 143 and 2004 c 66.

296-96-02365 What is required for physically handicapped lifts? [Statutory Authority: RCW 70.87.020, 70.87.030, 70.87.034, 70.87.120, 70.87.185 and chapter 70.87 RCW. 01-02-026, § 296-96-02365, filed 12/22/00, effective 1/22/01.] Repealed by 04-12-047, filed 5/28/04, effective 6/30/04. Statutory Authority: RCW 70.87.020, 70.87.030, 70.87.034, 70.87.120, 70.87.185, 70.87.190, 2002 c 98, 2003 c 143 and 2004 c 66.

296-96-11000 What regulations apply to belt manlifts after 1974? [Statutory Authority: RCW 70.87.020, 70.87.030, 70.87.034, 70.87.120, 70.87.185 and chapter 70.87 RCW. 01-02-026, § 296-96-11000, filed 12/22/00, effective 1/22/01.] Repealed by 04-12-047, filed 5/28/04, effective 6/30/04. Statutory Authority: RCW 70.87.020, 70.87.030, 70.87.034, 70.87.120, 70.87.185, 70.87.190, 2002 c 98, 2003 c 143 and 2004 c 66.

PART A - ADMINISTRATIVE

WAC 296-96-00500 Scope, purpose, and authority. This chapter is authorized by chapter 70.87 RCW covering elevators, lifting devices, moving walks, and other conveyances. The purpose of this chapter is to:

(1) Provide for the safe design, mechanical and electrical operation, and inspection of conveyances, and performance of conveyance work;

(2) Ensure that all such operation, design inspection, and conveyance work subject to the provisions of this chapter will be reasonably safe to persons and property and in conformity with the provisions of this chapter and the applicable statutes of the state of Washington.

(3) Establish and ensure compliance with the minimum standards for becoming a licensed elevator contractor and/or licensed elevator mechanic performing work on elevators or other conveyances covered by chapter 70.87 RCW and this chapter.

[Statutory Authority: RCW 70.87.020, 70.87.030, 70.87.034, 70.87.120, 70.87.185, 70.87.190, 2002 c 98, 2003 c 143 and 2004 c 66. 04-12-047, § 296-96-00500, filed 5/28/04, effective 6/30/04. Statutory Authority: RCW 70.87.020, 70.87.030, 70.87.034, 70.87.120, 70.87.185 and chapter 70.87 RCW. 01-02-026, § 296-96-00500, filed 12/22/00, effective 1/22/01.]

WAC 296-96-00600 What rules apply to your conveyance? Elevators and other conveyances must comply with the rules adopted by the department that were in effect at the time the conveyance was permitted, regardless of whether the rule(s) has been repealed, unless any new rule specifically states that it applies to all conveyances, regardless of when the conveyance was permitted. Copies of previous rules adopted by the department are available upon request.

Please note, if the conveyance is altered the components associated with the alteration must comply with all of the applicable rules adopted by the department in effect at the time the conveyance was altered. If the department determines that a conveyance was altered without a permit and inspection, the alteration will be required to comply with the applicable rules adopted by the department at the time the noncompliant alteration was identified.

[Statutory Authority: RCW 70.87.020, 70.87.030, 70.87.034, 70.87.120, 70.87.185, 70.87.190, 2002 c 98, 2003 c 143 and 2004 c 66. 04-12-047, § 296-96-00600, filed 5/28/04, effective 6/30/04. Statutory Authority: RCW 70.87.020, 70.87.030, 70.87.034, 70.87.120, 70.87.185 and chapter 70.87 RCW. 01-02-026, § 296-96-00600, filed 12/22/00, effective 1/22/01.]

WAC 296-96-00650 Which National Elevator Codes and Supplements has the department adopted?

NATIONAL ELEVATOR CODES AND SUPPLEMENTS ADOPTED				
TYPE OF CONVEYANCE	NATIONAL CODE AND SUPPLEMENTS	DATE INSTALLED		COMMENTS
		FROM	TO	
Elevators, Dumbwaiters, Escalators	American Standard Safety Code (ASA) A17.1, 1960	Prior to 11/1/1963		Adopted Standard Part X of ASA applies to all installations in existence prior to 11/1/63.
Elevators, Dumbwaiters, Escalators	American Standard Safety Code (ASA) A17.1, 1960	11/1/1963	12/29/1967	Adopted Standard
Moving Walks	American Safety Association A17.1.13, 1962	11/1/1963	12/29/1967	Adopted Standard
Elevators, Dumbwaiters, Escalators, and Moving Walks	U.S.A. Standards (USAS) USAS A17.1, 1965; Supplements A17.1a, 1967; A17.1b, 1968; A17.1c, 1969;	12/30/1967	2/24/1972	Adopted Standard USAS 1965 includes revision and consolidation of A17.1-1, 1960, A17.1a, 1963, and A17.1-13, 1962. Adopted code and supplements, excluding Appendix E and ANSI 17.1d, 1970.
Elevators, Dumbwaiters, Escalators, and Moving Walks	American National Standard Institute ANSI A17.1, 1971	2/25/1972	6/30/1982	Adopted Standard as amended and revised through 1971.
Elevators, Dumbwaiters, Escalators, and Moving Walks	ANSI A17.1, 1971; A17.1a, 1972	2/25/1972	6/30/1982	Adopted Supplement
Elevators, Dumbwaiters, Escalators, and Moving Walks	ANSI A17.1, 1981	7/1/1982	1/9/1986	Adopted Standard
Elevators, Dumbwaiters, Escalators, and Moving Walks	ANSI A17.1a, 1982	3/1/1984	1/9/1986	Adopted Supplement
Elevators, Dumbwaiters, Escalators, and Moving Walks	ANSI A17.1b, 1983	12/1/1984	1/9/1986	Adopted Supplement, except portable escalators covered by Part VIII of A17.1b, 1983.
Elevators, Dumbwaiters, Escalators, and Moving Walks	ANSI A17.1, 1984	1/10/1986	12/31/1988	Adopted Standard Except Part XIX. After 11/1/1988 Part II, Rule 211.3b was replaced by WAC 296-81-275.
Elevators, Dumbwaiters, Escalators, and Moving Walks	ANSI A17.1a, 1985	1/10/1986	12/31/1988	Adopted Supplement
Elevators, Dumbwaiters, Escalators, and Moving Walks	ANSI A17.1b, 1985; A17.1c, 1986; A17.1d, 1986; and A17.1e, 1987	12/6/1987	12/31/1988	Adopted Supplement
Elevators, Dumbwaiters, Escalators, and Moving Walks	ANSI A17.1, 1987	1/1/1989	12/31/1992	Adopted Standard Except Part XIX and Part II, Rule 211.3b. WAC 296-81-275 replaced Part II, Rule 211.3b.
Elevators, Dumbwaiters, Escalators, and Moving Walks	ANSI A17.1, 1990	1/1/1993	2/28/1995	Adopted Standard Except Part XIX and Part V, Section 513. Chapter 296-94 WAC replaced Part V, Section 513.

NATIONAL ELEVATOR CODES AND SUPPLEMENTS ADOPTED				
TYPE OF CONVEYANCE	NATIONAL CODE AND SUPPLEMENTS	DATE INSTALLED		COMMENTS
		FROM	TO	
Elevators, Dumbwaiters, Escalators, and Moving Walks	ANSI A17.1, 1993	3/1/1995	6/30/1998	Adopted Standard Except Part XIX and Part V, Section 513. Chapter 296-94 WAC replaced Part V, Section 513.
Elevators, Dumbwaiters, Escalators, and Moving Walks	ASME A17.1, 1996	6/30/1998	Effective date of these rules	Adopted Standard Except Part V, Section 513.
Elevators, Dumbwaiters, Escalators, and Moving Walks	ASME A17.1, 2000; A17.1a, 2002; A17.1b, 2003	Effective date of these rules	Current	Adopted Standards and Addenda Except Rules 2.4.12.2, 8.6.5.8 and Sections 5.4, 7.4, 7.5, 7.6, 7.9, 7.10, 8.10.1.1.3 and 8.11.1.1.
Safety Standards for Platform Lifts and Stairway Chairlifts	ASME A18.1, 1999; A18.1a, 2001; A18.1b, 2001	Effective date of these rules	Current	Adopted Standards and Addenda.
Note: Copies of codes and supplements can be obtained from The American Society of Mechanical Engineers, Order Department, 22 Law Drive, Box 2900, Fairfield, New Jersey, 07007-2900 or by visiting www.asme.org.				

[Statutory Authority: RCW 70.87.020, 70.87.030, 70.87.034, 70.87.120, 70.87.185, 70.87.190, 2002 c 98, 2003 c 143 and 2004 c 66. 04-12-047, § 296-96-00650, filed 5/28/04, effective 6/30/04. Statutory Authority: RCW 70.87.020, 70.87.030, 70.87.034, 70.87.120, 70.87.185 and chapter 70.87 RCW. 01-02-026, § 296-96-00650, filed 12/22/00, effective 1/22/01.]

WAC 296-96-00700 Chapter definitions. The following definitions apply to this chapter (see RCW 70.87.010 for additional definitions necessary for use with this chapter):

"ANSI" means the American National Standard Institute.

"ASA" means the American Safety Association.

"ASME" means the American Society of Mechanical Engineers.

"Acceptable proof" refers to the documentation that must be provided to the department during the elevator contractor and mechanic license application and renewal process. Acceptable proof may include department-approved forms documenting years of experience, affidavits, letters from previous employers, declarations of experience, education credits, copies of contractor registration information, etc. Additional documentation may be requested by the department to verify the information provided on the application.

"Code" refers to nationally accepted codes (i.e., ASME, ANSI, ASA, and NEC) and/or the Washington Administrative Code.

"Decommissioned conveyance" means an installation whose power feed lines have been disconnected and:

(a) A traction elevator, dumbwaiter, or material lift whose suspension ropes have been removed, whose car and counterweight rests at the bottom of the hoistway, and whose hoistway doors have been permanently barricaded or sealed in the closed position on the hoistway side;

(b) A hydraulic elevator, dumbwaiter, or material lift whose: Car rests at the bottom of the hoistway, pressure piping has been disassembled and a section removed from the premises, hoistway doors have been permanently barricaded or sealed in the closed position on the hoistway side, suspension ropes have been removed and counterweights, if provided, landed at the bottom of the hoistway; or

(c) An escalator or moving walk whose entrances have been permanently barricaded.

"Final judgment" means any money that is owed the department as the result of an individual's or firm's unsuccessful appeal of a civil penalty. Final judgment also includes any penalties assessed against an individual or firm owed the department as a result of an unappealed civil penalty or any outstanding fees due under chapter 70.87 RCW and this chapter.

"General direction—Installation and alteration work" means the necessary education, assistance, and supervision provided by a licensed elevator mechanic (in the appropriate category) who is on the same job site as the helper/apprentice at least seventy-five percent of each working day. The ratio of helper to mechanic shall be one-to-one.

"General direction—Maintenance work" means the necessary education, assistance, and supervision provided by a licensed elevator mechanic (in the appropriate category) to ensure that the maintenance work is performed safely and to code.

"Lockout" means the placement of a lockout device on an energy isolating device, in accordance with an established procedure, ensuring that the energy isolating device and the equipment being controlled cannot be operated until the lockout device is removed.

"Primary point of contact" is the designated individual employed by a licensed elevator contractor.

"Red tag" or **"red tag status"** means an elevator or other conveyance that has been removed from service and operation because of noncompliance with chapter 70.87 RCW and this chapter or at the request of the owner.

"Private residence elevator" (residential elevator) means a power passenger elevator which is limited in size, capacity, rise and speed and is installed in a private residence or multiple dwelling as a means of access to a private residence provided the elevators are so installed that they are not accessible to the general public or to other occupants in the building.

"RCW" means the Revised Code of Washington.

"Tagout" means the placement of a tagout device on an energy isolating device, in accordance with an established procedure, to indicate that the energy isolating device and the equipment being controlled may not be operated until the tagout device is removed.

"Traction elevator" means an elevator in which the friction between the hoist ropes and the machine sheave is used to move the elevator car.

"USAS" means the U.S.A. Standards.

"WAC" means the Washington Administrative Code.

[Statutory Authority: RCW 70.87.020, 70.87.030, 70.87.034, 70.87.120, 70.87.185, 70.87.190, 2002 c 98, 2003 c 143 and 2004 c 66. 04-12-047, § 296-96-00700, filed 5/28/04, effective 6/30/04. Statutory Authority: RCW 70.87.020, 70.87.030, 70.87.034, 70.87.120, 70.87.185 and chapter 70.87 RCW. 01-02-026, § 296-96-00700, filed 12/22/00, effective 1/22/01.]

WAC 296-96-00800 Advisory committee on conveyances. (1) The purpose of the advisory committee is to advise the department on the adoption of regulations that apply to conveyances; methods of enforcing and administering the elevator law, chapter 70.87 RCW; and matters of concern to the conveyance industry and to the individual installers, owners and users of conveyances.

(2) The advisory committee consists of seven members appointed by the director or his or her authorized representative.

(3) The committee members shall serve four years. However, if a member is unable to fulfill his or her obligations, a new member may be appointed.

(4) The committee shall meet on the third Tuesday of February, May, August, and November of each year, and at other times at the discretion of the chief of the elevator section.

(5) The chief of the elevator section shall be the secretary for the advisory committee.

(6) An advisory committee member may appoint an alternate to attend meetings in case of conflict or illness.

[Statutory Authority: RCW 70.87.020, 70.87.030, 70.87.034, 70.87.120, 70.87.185, 70.87.190, 2002 c 98, 2003 c 143 and 2004 c 66. 04-12-047, § 296-96-00800, filed 5/28/04, effective 6/30/04. Statutory Authority: RCW 70.87.020, 70.87.030, 70.87.034, 70.87.120, 70.87.185 and chapter 70.87 RCW. 01-02-026, § 296-96-00800, filed 12/22/00, effective 1/22/01.]

WAC 296-96-00805 Appeal rights and hearings. (1) Chapter 70.87 RCW provides the authority for the duties and responsibilities of the department. Except as provided in chapter 70.87 RCW and this chapter, all appeals and hearings will be conducted according to chapter 34.05 RCW, the Administrative Procedure Act and chapter 10-08 WAC, Model Rules of Procedure.

(2) A person who contests a notice of violation or infraction issued by the department may request a hearing. The request for a hearing must be:

(a) In writing;

(b) Accompanied by a certified or cashier's check, payable to the department, for two hundred dollars; and

(c) Postmarked or received by the department within fifteen days after the person receives the department's violation notice.

(3) In all appeals of chapter 70.87 RCW and this chapter the appellant has the burden of proof by a preponderance of the evidence.

[Statutory Authority: RCW 70.87.020, 70.87.030, 70.87.034, 70.87.120, 70.87.185, 70.87.190, 2002 c 98, 2003 c 143 and 2004 c 66. 04-12-047, § 296-96-00805, filed 5/28/04, effective 6/30/04.]

PART B - LICENSES AND FEES FOR ALL ELEVATORS, DUMBWAITERS, ESCALATORS AND OTHER CONVEYANCES

NOTE: Total fees include the sum of the permit cost plus plan check fees.

WAC 296-96-00900 In general, who is required to be licensed under this chapter? (1) Any person, firm, or company wishing to engage in the business of conveyance work regulated under chapter 70.87 RCW and this chapter must be a licensed elevator contractor.

(2) Any person wishing to perform conveyance work regulated under chapter 70.87 RCW and this chapter must be a licensed elevator mechanic employed by a licensed elevator contractor.

[Statutory Authority: RCW 70.87.020, 70.87.030, 70.87.034, 70.87.120, 70.87.185, 70.87.190, 2002 c 98, 2003 c 143 and 2004 c 66. 04-12-047, § 296-96-00900, filed 5/28/04, effective 6/30/04.]

WAC 296-96-00902 Are there exceptions from the elevator mechanic licensing requirements? Yes.

(1) Elevator mechanic licenses issued under chapter 70.87 RCW and this chapter are not required for:

(a) Individuals who install signal systems, fans, electric light fixtures, illuminated thresholds and feed wires to the terminals on the elevator main line control provided that the individual does not require access to the pit, hoistway, or top of the car for the installation of these items.

(b) An owner or regularly employed employee of the owner performing only maintenance work of conveyances in accordance with RCW 70.87.270.

(2) Elevator mechanic licenses may not be required for certain types of incidental work that is performed on conveyances when the appropriate lockout and tagout procedures have been performed by a licensed elevator mechanic in the appropriate category. The department must be notified and must approve the scope of work prior to it being performed.

[Statutory Authority: RCW 70.87.020, 70.87.030, 70.87.034, 70.87.120, 70.87.185, 70.87.190, 2002 c 98, 2003 c 143 and 2004 c 66. 04-12-047, § 296-96-00902, filed 5/28/04, effective 6/30/04.]

WAC 296-96-00903 Are there exceptions from the elevator contractor licensing requirements? Yes. Elevator contractor licenses issued under chapter 70.87 RCW and this chapter are not required for:

(1) An owner or regularly employed employee of the owner performing only maintenance work of conveyances in accordance with RCW 70.87.270.

(2) A public agency that employs licensed elevator mechanics to perform maintenance.

[Statutory Authority: RCW 70.87.020, 70.87.030, 70.87.034, 70.87.120, 70.87.185, 70.87.190, 2002 c 98, 2003 c 143 and 2004 c 66. 04-12-047, § 296-96-00903, filed 5/28/04, effective 6/30/04.]

WAC 296-96-00904 What must you do to become and remain a licensed elevator contractor? (1) Obtain and maintain a valid specialty or general contractor registration under chapter 18.27 RCW to engage in the business of conveyance work.

(2) Complete and submit a department-approved application. As part of the application:

(a) Specify the employee who is the licensed elevator contractor's primary point of contact.

(b) The person, firm or company who is applying for the elevator contractor's license must:

(i) Provide acceptable proof to the department that shows that the person, firm, or company has five years of work experience in performing conveyance work as verified by current and previous elevator contractor licenses to do business; or

(ii) Pass a written examination administered by the department on chapter 70.87 RCW and this chapter. (In the case of a firm or company, the exam will be administered to the designated primary point of contact.)

(iii) Failure to pass the examination will require the submittal of a new application.

(3) Pay the fees specified in WAC 296-96-00922.

(4) The department may deny application of a license under this section if the applicant owes outstanding final judgments to the department.

(5) If the primary point of contact identified in subsection (2)(a) of this section separates employment, his/her relationship or designation is terminated, or death of the designated individual occurs, the elevator contractor must, within ninety days, designate a new individual who has successfully completed the elevator contractor examination and inform the department of the change in writing or the elevator contractor license will be automatically suspended.

[Statutory Authority: RCW 70.87.020, 70.87.030, 70.87.034, 70.87.120, 70.87.185, 70.87.190, 2002 c 98, 2003 c 143 and 2004 c 66. 04-12-047, § 296-96-00904, filed 5/28/04, effective 6/30/04.]

WAC 296-96-00906 What must you do to become a licensed elevator mechanic? (1) Qualify for licensing:

(a) For conveyance work covered by all categories identified in WAC 296-96-00910 except material lifts (05), residential conveyances (06), residential inclined elevators (07) and temporary licenses (09), the applicant must comply with the applicable mechanic licensing requirements as follows:

(i) Test.

(A) The applicant must provide acceptable proof to the department that shows the necessary combination of documented experience and education credits in the applicable license category (see WAC 296-96-00910) of not less than three years' work experience in the elevator industry performing conveyance work as verified by current and previous employers licensed to do business in this state or as an employee of a public agency; and

(B) Pass an examination administered by the department on chapter 70.87 RCW and this chapter.

(ii) Grandfather.

(A) Before October 1, 2004, the applicant must provide acceptable proof to the department that shows the necessary combination of documented experience and education credits in the applicable license category (see WAC 296-96-00910) of not less than three years' work experience in the elevator industry, performing conveyance work, as verified by current and previous employers licensed to do business in this state or as an employee of a public agency; and

(B) Have worked without direct and immediate supervision for an elevator contractor licensed to do business in this state or as an employee of a public agency. This employment may not be less than three years immediately before March 1, 2004.

(iii) National exam/education.

(A) Have obtained a certificate of completion and successfully passed the mechanic examination of a nationally recognized training program for the elevator industry such as the National Elevator Industry Educational Program or its equivalent; or

(B) Have obtained a certificate of completion of an apprenticeship program for an elevator mechanic, having standards substantially equal to those of chapter 70.87 RCW and this chapter, and registered with the Washington state apprenticeship and training council under chapter 49.04 RCW.

(iv) Reciprocity. The applicant must provide acceptable proof to the department that shows that the applicant is holding a valid license from a state having entered into a reciprocal agreement with the department and having standards substantially equal to those of chapter 70.87 RCW and this chapter.

(b) For conveyance work performed on material lifts as identified in WAC 296-96-00910(5):

(i) Test.

(A) The applicant and the licensed elevator contractor/employer must comply with the provisions of RCW 70.87.245; and

(B) The applicant must pass an examination administered by the department on chapter 70.87 RCW and this chapter;

(ii) Grandfather.

(A) Before October 1, 2004, the applicant must provide acceptable proof to the department that shows the necessary combination of documented experience and education credits in the material lift license category (see WAC 296-96-00910) performing conveyance work on material lifts, as verified by current and previous employers licensed to do business in this state; and

(B) Worked without direct and immediate supervision for an elevator contractor licensed to do business in this state. This employment may not be less than three years immediately before March 1, 2004.

(c) For residential conveyance work covered by category (06) as identified in WAC 296-96-00910:

(i) Test.

(A) The applicant must provide acceptable proof to the department that shows the necessary combination of documented experience and education credits in the applicable license category (see WAC 296-96-00910) of not less than two years' work experience in the elevator industry performing conveyance work as verified by current and previous employers licensed to do business in this state; and

(B) Pass an examination administered by the department on chapter 70.87 RCW and this chapter.

(ii) Grandfather.

(A) Before October 1, 2004, the applicant must provide acceptable proof to the department that shows the necessary combination of documented experience and education credits in the residential conveyance license category (see WAC 296-96-00910) performing conveyance work on residential inclined and vertical wheelchair lifts and stair chairlifts, as

verified by current and previous employers licensed to do business in this state; and

(B) Worked without direct and immediate supervision for an elevator contractor licensed to do business in this state. This employment may not be less than two years immediately before March 1, 2004.

(d) For residential inclined conveyance work covered by category (07) as identified in WAC 296-96-00910;

(i) Test.

(A) The applicant must provide acceptable proof to the department that shows the necessary combination of documented experience and education credits in the applicable license category (see WAC 296-96-00910) of not less than one year's work experience in the elevator industry or not less than three years' documented experience and education credits in conveyance work as described in category (01) performing conveyance work as verified by current and previous employers licensed to do business in this state; and

(B) Pass an examination administered by the department on chapter 70.87 RCW and this chapter.

(ii) Grandfather.

(A) Before October 1, 2004, the applicant must provide acceptable proof to the department that shows the necessary combination of documented experience and education credits in the residential inclined conveyance license category (see WAC 296-96-00910) performing conveyance work on residential inclined conveyances, as verified by current and previous employers licensed to do business in this state; and

(B) Worked without direct and immediate supervision for an elevator contractor licensed to do business in this state. This employment may not be less than one year immediately before March 1, 2004.

(e) For temporary mechanic licenses as identified in WAC 296-96-00910 category (09) the applicant must provide acceptable proof from a licensed elevator contractor that attests that the temporary mechanic is certified as qualified and competent to perform work under chapter 70.87 RCW and this chapter.

(2) Complete and submit a department-approved application.

(a) **Applications received before October 1, 2004.** If an applicant who meets subsection (1)(d)(i)(A) of this section, who applies before October 1, 2004, and is required to take an examination under the provisions of this section, the applicant may perform the duties of a licensed elevator mechanic until the applicant has been provided notice by the department of the results of his/her examination.

(b) **Applications received on or after October 1, 2004.** An applicant who is required to take an examination under the provisions of this section may not perform the duties of a licensed elevator mechanic until the applicant has been notified by the department that he/she has passed the examination.

(3) Pay the fees specified in WAC 296-96-00922.

(4) The department may deny application of a license under this section if the applicant owes outstanding final judgments to the department.

[Statutory Authority: RCW 70.87.020, 70.87.030, 70.87.034, 70.87.120, 70.87.185, 70.87.190, 2002 c 98, 2003 c 143 and 2004 c 66. 04-12-047, § 296-96-00906, filed 5/28/04, effective 6/30/04.]

WAC 296-96-00910 What are the elevator mechanic license categories? The following are the licensing categories for qualified elevator mechanics or temporary elevator mechanics:

(1) **Category (01):** A general elevator mechanic license encompasses mechanical and electrical operation, construction, installation, alteration, maintenance, inspection, relocation, and repair of all types of elevators and other conveyances in any location covered under chapter 70.87 RCW and this chapter.

(2) **Category (02):** This license is limited to the mechanical and electrical operation, construction, installation, alteration, maintenance, inspection, relocation, and repair of the following commercial and residential conveyances:

(a) Wheelchair lifts;

(b) Dumbwaiters; and

(c) Incline chairlifts.

Note: Work experience on residential conveyances in (a)(i), (ii), and (iii) of this subsection may not be applied toward the category (02) license requirements.

(3) **Category (03):** This license is limited to the mechanical and electrical operation, construction, installation, alteration, maintenance, inspection, relocation, and repair of the following conveyances in industrial sites and grain terminals:

(a) Electric and hand powered manlifts;

(b) Special purpose elevators; and

(c) Belt manlifts.

(4) **Category (04):** This license is limited to the mechanical and electrical operation, construction, installation, alteration, maintenance, inspection, relocation, and repair of the following conveyances:

(a) Temporary personnel hoists;

(b) Temporary material hoists; and

(c) Special purpose elevators.

(5) **Category (05):** This license is limited to the mechanical and electrical operation, construction, installation, alteration, maintenance, inspection, relocation, and repair of material lifts.

(6) **Category (06):**

(a) This license is limited to the mechanical and electrical operation, construction, installation, alteration, maintenance, inspection, relocation, and repair of the following conveyances:

(i) Residential wheelchair lifts;

(ii) Residential dumbwaiters; and

(iii) Residential incline chairlifts.

(b) Work experience on conveyances in (a)(i), (ii), and (iii) of this subsection may not be applied toward the category (02) license requirements.

Note: Maintenance work performed by the owner or at the direction of the owner is exempted from licensing requirements provided that the owner resides in the residence at which the conveyance is located and the conveyance is not accessible to the general public. Such exempt work does not count toward work experience for licensure.

(7) **Category (07):** This license is limited to the mechanical and electrical operation, construction, installation, alteration, maintenance, inspection, relocation, and repair of residential inclined elevators.

Note: Maintenance work performed by the owner or at the direction of the owner is exempted from licensing requirements provided that the owner resides in the residence at which the conveyance is located and the conveyance is not accessible to the general public. Such exempt work does not count toward work experience for licensure.

(8) **Category (08):** This license is limited to maintenance of all conveyances and is further limited to employees of public agencies to obtain and maintain the license. This work should not count towards other licenses.

(9) **Category (09):** This temporary license is limited to the mechanical and electrical operation, construction, installation, alteration, maintenance, inspection, relocation, and repair of conveyances. This license is limited to individuals that are certified as qualified and competent by licensed elevator contractors. The individual must be an employee of the licensed elevator contractor. The contractor shall furnish acceptable proof of competency as the department may require. Each license must recite that it is valid for a period of thirty days from the date of issuance and for such particular elevators or geographical areas as the department may designate, and otherwise entitles the licensee to the rights and privileges of an elevator mechanic license issued under chapter 70.87 RCW and this chapter.

[Statutory Authority: RCW 70.87.020, 70.87.030, 70.87.034, 70.87.120, 70.87.185, 70.87.190, 2002 c 98, 2003 c 143 and 2004 c 66. 04-12-047, § 296-96-00910, filed 5/28/04, effective 6/30/04.]

WAC 296-96-00912 How long is the elevator contractor, elevator mechanic, and temporary mechanics licensing period and what is required for renewal? (1) Elevator contractors.

(a) The renewal period is two years from the date of issuance.

(b) As part of the renewal process the elevator contractor must:

(i) Complete and submit a department-approved application.

(ii) Designate an employee as a primary point of contact.

(iii) Pay the fees specified in WAC 296-96-00922.

(2) Elevator mechanics.

(a) The renewal period is two years from the date of your birthday. The initial license may be for a shorter period as follows. If your birth year is:

(i) In an even-numbered year, your certificate will expire on your birth date in the next even-numbered year.

(ii) In an odd-numbered year, your certificate will expire on your birth date in the next odd-numbered year.

(b) As part of the renewal process you must:

(i) Complete and submit a department-approved application.

(ii) Have attended an approved continuing education course and submitted a certificate of completion for the course. The course must consist of not less than eight hours of instruction that must have been attended and completed within one year immediately preceding any license renewal.

(iii) Pay the fees specified in WAC 296-96-00922.

(3) Temporary elevator mechanics.

(a) The renewal period is thirty days from the date of issuance.

(b) As part of the renewal process you must:

(i) Complete and submit a department-approved application.

(ii) Pay the fees specified in WAC 296-96-00922.

(4) The department may deny renewals of licenses under this section if the applicant owes outstanding final judgments to the department.

[Statutory Authority: RCW 70.87.020, 70.87.030, 70.87.034, 70.87.120, 70.87.185, 70.87.190, 2002 c 98, 2003 c 143 and 2004 c 66. 04-12-047, § 296-96-00912, filed 5/28/04, effective 6/30/04.]

WAC 296-96-00914 Where can you obtain information regarding department-approved continuing education course providers? The department will produce a list of all approved training course providers and/or course contact persons that provide continuing education courses required under chapter 70.87 RCW and this chapter. This list will be available to all renewal applicants who request it.

The department may also provide continuing education training.

[Statutory Authority: RCW 70.87.020, 70.87.030, 70.87.034, 70.87.120, 70.87.185, 70.87.190, 2002 c 98, 2003 c 143 and 2004 c 66. 04-12-047, § 296-96-00914, filed 5/28/04, effective 6/30/04.]

WAC 296-96-00916 Who approves and what is the process for becoming a continuing education course provider? (1) The department approves continuing education course providers.

(2) The department will review and approve courses.

(a) All providers seeking course approval must submit the required information to the department on a form provided by the department.

(b) The courses must be taught by instructors through continuing education providers; courses may include but are not limited to, association seminars and labor training programs.

(c) All instructors must be approved by the department and are exempt from the requirements of WAC 296-96-00912 (2)(b)(ii) with regard to his or her application for license renewal, provided that such applicant was qualified as an instructor at any time during the one year immediately preceding the scheduled date for such renewal and the instructor must teach two or more courses in the year preceding the renewal.

(d) All training courses must conform to and be based upon current standards and requirements governing the operation, construction, installation, alteration, inspection and repair of elevators and other conveyances.

(e) All course approval requests must include:

(i) A general description of the course, including its scope, the instructional materials to be used and the instructional methods to be followed;

(ii) A detailed course outline;

(iii) The name and qualifications of the course instructor(s);

(iv) The locations where the course will be taught;

(v) The days and hours the course will be offered; and

(vi) The specific fees associated with the course, as well as, the total cost of the course.

(f) Training courses will be approved for a two-year period.

(g) It is the responsibility of the provider to annually review and update its courses and to notify the department of any changes.

(h) The department may withdraw its approval of any training course if it determines the provider is no longer in compliance with the requirements of this chapter. If the department withdraws its approval of a training course, it will give the provider written notification of the withdrawal, specifying the reasons for its decision.

(i) Approved training providers must keep uniform records, for a period of ten years, of attendance of licensees and these records must be available for inspection by the department at its request. The provider must submit a list of names of the attendees to the department on or before thirty days after the date of the course being held. Approved training providers are responsible for the security of all attendance records and certificates of completion. Falsifying or knowingly allowing another to falsify attendance records or certificates of completion constitutes grounds for suspension or revocation of the approval required under this section.

[Statutory Authority: RCW 70.87.020, 70.87.030, 70.87.034, 70.87.120, 70.87.185, 70.87.190, 2002 c 98, 2003 c 143 and 2004 c 66. 04-12-047, § 296-96-00916, filed 5/28/04, effective 6/30/04.]

WAC 296-96-00918 Who is exempt from the continuing education requirements? The following individuals are exempt from continuing education requirements:

(1) A licensee who is unable to complete the continuing education course required under this section before the expiration of his or her license due to a temporary disability may apply for a waiver from the department. Application shall be made on a form provided by the department and signed under the penalty of perjury and accompanied by a certified statement from a competent physician attesting to the temporary disability. Upon the termination of the temporary disability, the licensee must submit to the department a certified statement from the same physician, if practicable, attesting to the termination of the temporary disability at which time a waiver sticker, valid for ninety days, must be issued to the licensee and affixed to his or her license.

The licensee can work during the time that a certified statement from the physician is submitted to the department. The licensee has ninety days from this date to take the required courses in order to renew his/her license. If the licensee has not taken the required courses on or before the ninetieth day from the date the certified statement was sent in to the department, he/she will no longer be able to perform work.

(2) Approved instructors under WAC 296-96-00916 with regard to his or her application for license renewal, provided that such applicant was qualified as an instructor at any time during the one year immediately preceding the scheduled date for such renewal and that the instructor must teach two or more courses in the year preceding the renewal.

[Statutory Authority: RCW 70.87.020, 70.87.030, 70.87.034, 70.87.120, 70.87.185, 70.87.190, 2002 c 98, 2003 c 143 and 2004 c 66. 04-12-047, § 296-96-00918, filed 5/28/04, effective 6/30/04.]

WAC 296-96-00920 When and where are elevator licensing examinations held? Examinations shall be held at locations and times when considered necessary by the department. The department will notify qualified applicants of the date, time, and location of the examination.

[Statutory Authority: RCW 70.87.020, 70.87.030, 70.87.034, 70.87.120, 70.87.185, 70.87.190, 2002 c 98, 2003 c 143 and 2004 c 66. 04-12-047, § 296-96-00920, filed 5/28/04, effective 6/30/04.]

WAC 296-96-00922 What are the fees associated with licensing? The following are the department's elevator license fees:

Type of Fee	Period Covered by Fee	Dollar Amount of Fee
Elevator contractor/mechanic application fee (not required for renewal of valid license)	Per application	$50.00
Elevator contractor/mechanic examination fee	Per application	$150.00
Reciprocity application fee*	Per application	$50.00
Elevator mechanic license	2 years	$100.00
Elevator contractor license	2 years	$100.00
Temporary elevator mechanic license	30 days	$25.00
Elevator mechanic/contractor timely renewal fee**	2 years	$100.00
Elevator mechanic/contractor late renewal fee***	2 years	$200.00
Training provider application/renewal fee	2 years	$100.00
Continuing education course fee by approved training provider****	1 year	Not applicable
Replacement of any licenses		$15.00
Refund processing fee		$30.00

* Reciprocity application is only allowed for applicants who are applying for licensing based upon possession of a valid license that was obtained in state(s) with which the department has a reciprocity agreement.

** Renewals will be considered "timely" when the renewal application is received on or prior to the expiration date of the license.

*** Late renewal is for renewal applications received no later than ninety days after the expiration of the licenses. If the application is not received within ninety days from license expiration, the licensee must reapply and pass the competency examination.

**** This fee is paid directly to the continuing education training course provider approved by the department.

[Statutory Authority: RCW 70.87.020, 70.87.030, 70.87.034, 70.87.120, 70.87.185, 70.87.190, 2002 c 98, 2003 c 143 and 2004 c 66. 04-12-047, § 296-96-00922, filed 5/28/04, effective 6/30/04.]

WAC 296-96-00924 What procedures does the department follow when issuing a civil penalty for licensing violations? (1) If the department determines that an individual has violated the licensing requirements of chapter 70.87 RCW or this chapter, the department may issue a civil penalty describing the reasons for the violation(s). The department may issue a civil penalty to:

(a) A person who is advertising, offering to do work or submitting a bid to perform conveyance work, or employing elevator mechanics and does not have a valid elevator contractor's license as required under chapter 70.87 RCW or this chapter; or

(b) An individual who is working under chapter 70.87 RCW or this chapter and does not have a valid elevator mechanic license.

(2) A person may appeal a civil penalty issued under chapter 70.87 RCW or this chapter.

(3) The following enforcement schedule will be used for licenses issued under chapter 70.87 RCW and this chapter:

(a) **July 1, 2004, through September 30, 2004.** Any individual, firm, or company that is found in violation of the licensing requirements will be notified of the violation and be allowed ten calendar days to make application with the department to avoid being issued a civil penalty. If the individual, firm, or company does not make application within ten calendar days they will be issued a civil penalty.

(b) **On or after October 1, 2004.** Any individual, firm, or company that is found in violation of the licensing requirements may be issued a civil penalty.

[Statutory Authority: RCW 70.87.020, 70.87.030, 70.87.034, 70.87.120, 70.87.185, 70.87.190, 2002 c 98, 2003 c 143 and 2004 c 66. 04-12-047, § 296-96-00924, filed 5/28/04, effective 6/30/04.]

WAC 296-96-00926 What are the civil (monetary) penalties for violating the licensing requirements of chapter 70.87 RCW or this chapter? (1) A person cited for a violation under chapter 70.87 RCW or this chapter may be assessed a civil (monetary) penalty based upon the following schedule:

First Violation	$500.00
Each additional Violation	$500.00

(2) Each day a person, firm or company is in violation may be considered a separate violation.

(3) Each job site at which a person is in violation may be considered a separate violation.

(4) The department must serve notice by certified mail to a person for a violation of chapter 70.87 RCW or this chapter.

[Statutory Authority: RCW 70.87.020, 70.87.030, 70.87.034, 70.87.120, 70.87.185, 70.87.190, 2002 c 98, 2003 c 143 and 2004 c 66. 04-12-047, § 296-96-00926, filed 5/28/04, effective 6/30/04.]

WAC 296-96-00930 What if I owe outstanding final judgments to the department? The department may deny renewal or application of, or suspend your license if you have an outstanding final judgment.

[Statutory Authority: RCW 70.87.020, 70.87.030, 70.87.034, 70.87.120, 70.87.185, 70.87.190, 2002 c 98, 2003 c 143 and 2004 c 66. 04-12-047, § 296-96-00930, filed 5/28/04, effective 6/30/04.]

PART B-1 - REGULATIONS AND FEES FOR ALL ELEVATORS, DUMBWAITERS, ESCALATORS AND OTHER CONVEYANCES

WAC 296-96-01000 What is the permit process for conveyances? (1) Prior to the start of the construction, alteration, or relocation of all conveyances (this includes both private residence and commercial conveyances) plans must be submitted to and approved by the department. See WAC 296-96-01030.

(2) Prior to construction, alteration, or relocation of any conveyance, you must get an installation permit from the department. See WAC 296-96-01010 through 296-96-01025.

(3) Your conveyance must be inspected upon completion of the construction, alteration, or relocation. See WAC 296-96-01035.

(4) You must obtain and renew an annual operating permit for each conveyance that you own, except for residential conveyances. See WAC 296-96-01065.

(5) After initial purchase and inspection private residence conveyance(s) do not require an annual permit. However, annual inspections may be conducted upon request. See WAC 296-96-01065 for the associated fees.

[Statutory Authority: RCW 70.87.020, 70.87.030, 70.87.034, 70.87.120, 70.87.185, 70.87.190, 2002 c 98, 2003 c 143 and 2004 c 66. 04-12-047, § 296-96-01000, filed 5/28/04, effective 6/30/04. Statutory Authority: RCW 70.87.020, 70.87.030, 70.87.034, 70.87.120, 70.87.185 and chapter 70.87 RCW. 01-02-026, § 296-96-01000, filed 12/22/00, effective 1/22/01.]

WAC 296-96-01005 When do I need a permit? (1) You must obtain a permit from the department before you begin constructing, altering or relocating any conveyance. To obtain your permit, you need to complete the permit application and pay the appropriate fee. Once your application is approved, a permit will be issued and you may begin work on your project.

(2) Construction and alteration permits are valid for one year from the date of issue. However, permits may be renewed if you:

(a) Apply for a renewal permit before your current permit expires;

(b) The department approves your request for a renewal permit; and

(c) You pay a fifty-dollar renewal fee to the department for each permit you renew;

(3) If your permit has expired you must reapply for a new permit.

(4) You are not required to obtain permits and pay fees for repairs and replacement associated with normal functions and necessary maintenance done with parts of equivalent materials, strength and design; or for any conveyance exempted by RCW 70.87.200.

[Statutory Authority: RCW 70.87.020, 70.87.030, 70.87.034, 70.87.120, 70.87.185, 70.87.190, 2002 c 98, 2003 c 143 and 2004 c 66. 04-12-047, § 296-96-01005, filed 5/28/04, effective 6/30/04. Statutory Authority: RCW 43.22.350, 43.22.434, 43.22.480, 43.22.500, 70.87.030, 18.106.070, 18.106.125, 2001 c 7, and chapters 18.106, 43.22, and 70.87 RCW. 03-12-045, § 296-96-01005, filed 5/30/03, effective 6/30/03. Statutory Authority:

RCW 70.87.020, 70.87.030, 70.87.034, 70.87.120, 70.87.185 and chapter 70.87 RCW. 01-02-026, § 296-96-01005, filed 12/22/00, effective 1/22/01.]

WAC 296-96-01006 What type of conveyance work requires permitting and inspection? (1) All installations and relocation of conveyances requires permitting and inspection. All conveyance work must be performed by an elevator mechanic licensed to perform work in the appropriate category. (See WAC 296-96-00910).

(2) All alterations and other conveyance work requires permitting and inspection and includes but is not limited to:

(a) Items identified in ASME A17.1.

(b) Any conveyance work that requires the conveyance to be tested prior to being returned to service, including:

(i) The replacement or repair of any parts, the installation of which would require recalibration or testing (e.g., brakes, hydraulic valves and piping, safeties, door reopening devices, governors, communication systems, cab interiors, car/hall buttons, etc.); or

(ii) Work performed on components or equipment affecting or necessary for fire and life safety (e.g., cab interiors, systems associated with fire recall, etc.).

Contact the department if you have any questions or need assistance determining if a permit and inspection are required.

[Statutory Authority: RCW 70.87.020, 70.87.030, 70.87.034, 70.87.120, 70.87.185, 70.87.190, 2002 c 98, 2003 c 143 and 2004 c 66. 04-12-047, § 296-96-01006, filed 5/28/04, effective 6/30/04.]

WAC 296-96-01007 What is the inspection and approval process for alterations? (1) The following process must be followed when performing alterations:

(a) Obtain a permit from the department prior to performing the alteration. The permit application must include detailed information on the scope of the alteration.

(b) Take the conveyance out-of-service and perform the alteration.

(c)(i) If the conveyance requires an inspection prior to being returned to service (as identified on the alteration permit), you must contact the department to perform an inspection and:

(A) If the conveyance passes the inspection, the conveyance may be placed back into service.

(B) If the conveyance fails the inspection, the conveyance must remain out-of-service until the corrections are made and approved by the department.

(ii) If the conveyance is not required to be inspected prior to being returned to service, you must contact the department to perform an inspection and:

(A) If the conveyance passes the inspection, the conveyance may remain in service.

(B) If the conveyance fails the inspection, the conveyance will be placed out-of-service until the corrections are made and approved by the department.

(2) For certain types of alterations additional work may be required as part of the alteration and prior to approval of the conveyance. These alterations include, but are not limited to:

(a) Replacements of controllers:

(i) Fire fighter service requirements must be met in accordance with the most recent code adopted by the department.

(ii) Seismic requirements ("ring and string" or "shaker box") must be met in accordance with the most recent code adopted by the department. In addition, the car must be capable of moving away from the floor.

(iii) Lighting in the machine room and pit must comply with the most recent code adopted by the department.

(iv) Electrical outlets in the machine room and pit must be of the ground fault interrupter type.

(b) Replacement of controllers and a car operating panel and/or hall fixtures:

(i) The requirements of (a) of this subsection must be met.

(ii) All panels and fixtures must meet the applicable (e.g., height, sound, Braille, etc.) requirements in accordance with the Americans with Disabilities Act.

(c) Replacement of door operators and/or door equipment: Any changes to these items require the installation of door restrictors:

(d) Hydraulic piping: Replacement, repair, or relocation of hydraulic piping will require the installation of a rupture valve.

Note: The department may grant exceptions to the requirements identified in this section.

[Statutory Authority: RCW 70.87.020, 70.87.030, 70.87.034, 70.87.120, 70.87.185, 70.87.190, 2002 c 98, 2003 c 143 and 2004 c 66. 04-12-047, § 296-96-01007, filed 5/28/04, effective 6/30/04.]

WAC 296-96-01009 Who can purchase a permit? The department may only issue a permit for conveyance work to a licensed elevator contractor.

Permits are only required for alterations and installations. Beginning with the effective date of these rules, the homeowner will no longer be allowed to purchase a permit.

[Statutory Authority: RCW 70.87.020, 70.87.030, 70.87.034, 70.87.120, 70.87.185, 70.87.190, 2002 c 98, 2003 c 143 and 2004 c 66. 04-12-047, § 296-96-01009, filed 5/28/04, effective 6/30/04.]

WAC 296-96-01010 What are the installation permit fees for conveyances, material lifts, and hoists and how are they calculated? Installation permit fees are based on the total cost of the conveyance and the labor to install the conveyance. The following permit fees apply to the construction or relocation of all conveyances and material lifts:

TOTAL COST OF CONVEYANCE	FEE
$0 to and including $1,000	$50.00
$1,001 to and including $5,000	75.00
$5,001 to and including $7,000	125.00
$7,001 to and including $10,000	150.00
$10,001 to and including $15,000	200.00
OVER $15,000	280.00 plus
Each additional $1,000 or fraction thereof	7.00

[Statutory Authority: RCW 70.87.020, 70.87.030, 70.87.034, 70.87.120, 70.87.185, 70.87.190, 2002 c 98, 2003 c 143 and 2004 c 66. 04-12-047, § 296-96-01010, filed 5/28/04, effective 6/30/04. Statutory Authority: RCW 43.22.350, 43.22.434, 43.22.480, 43.22.500, 18.27.040, 18.27.070, 18.27.075, 70.87.030, 19.28.041, 19.28.051, 19.28.101, 19.28.121, 19.28.161, 19.28.201, 19.28.211, 19.28.341, 2001 c 7, 2002 c 249, and chapters 19.28, 43.22, 18.27, and 70.87 RCW. 02-12-022, § 296-96-01010, filed 5/28/02, effective 6/28/02. Statutory Authority: RCW 43.22.350, 43.22.434, 43.22.480, 43.22.500, 18.27.070, 18.27.075, 70.87.030, 19.28.041, 19.28.051, 19.28.101, 19.28.121, 19.28.161, 19.28.201, 19.28.211,

19.28.341, 2001 c 159, and chapters 43.22, 19.28, 18.27, and 70.87 RCW. 01-12-035, § 296-96-01010, filed 5/29/01, effective 6/29/01. Statutory Authority: RCW 70.87.020, 70.87.030, 70.87.034, 70.87.120, 70.87.185 and chapter 70.87 RCW. 01-02-026, § 296-96-01010, filed 12/22/00, effective 1/22/01.]

WAC 296-96-01012 What are the permit fees for alterations to conveyances, material lifts, and hoists and how are they calculated? Permit fees are based on the total cost of the equipment, materials and labor to perform the alteration. The following permit fees apply to the alteration of all conveyances and material lifts:

TOTAL COST OF ALTERATION	FEE
$0 to and including $1,000	$50.00
$1,001 to and including $5,000	75.00
$5,001 to and including $7,000	125.00
$7,001 to and including $10,000	150.00
$10,001 to and including $15,000	200.00
OVER $15,000	200.00
Each additional $1,000 or fraction thereof	$7.00

[Statutory Authority: RCW 43.22.350, 43.22.434, 43.22.480, 43.22.500, 18.27.040, 18.27.070, 18.27.075, 70.87.030, 19.28.041, 19.28.051, 19.28.101, 19.28.121, 19.28.161, 19.28.201, 19.28.211, 19.28.341, 2001 c 7, 2002 c 249, and chapters 19.28, 43.22, 18.27, and 70.87 RCW. 02-12-022, § 296-96-01012, filed 5/28/02, effective 6/28/02.]

WAC 296-96-01025 What is the permit fee for personnel and material hoists? The fee for each personnel hoist or material hoist installation is $200.00

Note: An operating permit is also required for these types of conveyances.

[Statutory Authority: RCW 43.22.350, 43.22.434, 43.22.480, 43.22.500, 18.27.040, 18.27.070, 18.27.075, 70.87.030, 19.28.041, 19.28.051, 19.28.101, 19.28.121, 19.28.161, 19.28.201, 19.28.211, 19.28.341, 2001 c 7, 2002 c 249, and chapters 19.28, 43.22, 18.27, and 70.87 RCW. 02-12-022, § 296-96-01025, filed 5/28/02, effective 6/28/02. Statutory Authority: RCW 70.87.020, 70.87.030, 70.87.034, 70.87.120, 70.87.185 and chapter 70.87 RCW. 01-02-026, § 296-96-01025, filed 12/22/00, effective 1/22/01.]

WAC 296-96-01027 Are initial installation permit fees refundable? Your initial installation permit fees are refundable if the installation work has not been performed minus a processing fee unless your permits have expired. No refunds will be issued for expired permits. All requests for refunds must be submitted in writing to the elevator section and must identify the specific permits and the reasons for which the refunds are requested.

The processing fee for each refund is $30.00

[Statutory Authority: RCW 70.87.020, 70.87.030, 70.87.034, 70.87.120, 70.87.185, 70.87.190, 2002 c 98, 2003 c 143 and 2004 c 66. 04-12-047, § 296-96-01027, filed 5/28/04, effective 6/30/04. Statutory Authority: RCW 43.22.350, 43.22.434, 43.22.480, 43.22.500, 18.27.040, 18.27.070, 18.27.075, 70.87.030, 19.28.041, 19.28.051, 19.28.101, 19.28.121, 19.28.161, 19.28.201, 19.28.211, 19.28.341, 2001 c 7, 2002 c 249, and chapters 19.28, 43.22, 18.27, and 70.87 RCW. 02-12-022, § 296-96-01027, filed 5/28/02, effective 6/28/02. Statutory Authority: RCW 43.22.350, 43.22.434, 43.22.480, 43.22.500, 18.27.070, 18.27.075, 70.87.030, 19.28.041, 19.28.051, 19.28.101, 19.28.121, 19.28.161, 19.28.201, 19.28.211, 19.28.341, 2001 c 159, and chapters 43.22, 19.28, 18.27, and 70.87 RCW. 01-12-035, § 296-96-01027, filed 5/29/01, effective 6/29/01. Statutory Authority: RCW 70.87.020, 70.87.030, 70.87.034, 70.87.120, 70.87.185 and chapter 70.87 RCW. 01-02-026, § 296-96-01027, filed 12/22/00, effective 1/22/01.]

WAC 296-96-01030 What is the process for installation and alteration plan approval? Prior to the start of construction, you must submit to the department for approval two copies of plans for new installations or major alterations. To be approved, the plan must comply with the latest adopted edition of the American Society of Mechanical Engineers (ASME), the National Electrical Code (NEC) and applicable Washington Administrative Codes (WAC). In addition, the plans must include all information necessary in determining whether each installation/alteration complies with all applicable codes. You must keep a copy of the approved plan on the job site until the department has witnessed all acceptance tests. Any alterations to the approved plan must be submitted to the department for approval before a final inspection will be conducted. The nonrefundable fees for reviewing your plans are:

For each installation/major alteration $25.00

If more than two sets of plans are submitted, the fee for each additional set $10.00

[Statutory Authority: RCW 43.22.350, 43.22.434, 43.22.480, 43.22.500, 70.87.030, 18.106.070, 18.106.125, 2001 c 7, and chapters 18.106, 43.22, and 70.87 RCW. 03-12-045, § 296-96-01030, filed 5/30/03, effective 6/30/03. Statutory Authority: RCW 43.22.350, 43.22.434, 43.22.480, 43.22.500, 18.27.040, 18.27.070, 18.27.075, 70.87.030, 19.28.041, 19.28.051, 19.28.101, 19.28.121, 19.28.161, 19.28.201, 19.28.211, 19.28.341, 2001 c 7, 2002 c 249, and chapters 19.28, 43.22, 18.27, and 70.87 RCW. 02-12-022, § 296-96-01030, filed 5/28/02, effective 6/28/02. Statutory Authority: RCW 43.22.350, 43.22.434, 43.22.480, 43.22.500, 18.27.070, 18.27.075, 70.87.030, 19.28.041, 19.28.051, 19.28.101, 19.28.121, 19.28.161, 19.28.201, 19.28.211, 19.28.341, 2001 c 159, and chapters 43.22, 19.28, 18.27, and 70.87 RCW. 01-12-035, § 296-96-01030, filed 5/29/01, effective 6/29/01. Statutory Authority: RCW 70.87.020, 70.87.030, 70.87.034, 70.87.120, 70.87.185 and chapter 70.87 RCW. 01-02-026, § 296-96-01030, filed 12/22/00, effective 1/22/01.]

WAC 296-96-01035 Are there inspection fees? Yes. The initial inspection of a conveyance or for the initial inspection of construction, alteration or relocation of a conveyance is included with your permit fee. Once the department has approved the initial installation of the conveyance you will be issued a temporary operating permit that is valid for 30 days. Prior to the expiration of the 30-day permit the application for an annual operating permit and the appropriate fees must be paid to the department. Once the department has received the appropriate fees and application you will be issued your first annual operating permit. You are required to renew your annual operating permit yearly.

The following inspections require an additional inspection fee:

(1) **Reinspection.** If a conveyance does not pass an initial inspection and an additional inspection is required, the fee for each reinspection of a conveyance is $100.00 per conveyance plus $50.00 per hour for each hour in addition to the first hour.

The department may waive reinspection fees.

(2) **Inspecting increases in the height (jumping) of personnel and material hoists.**

The fee for inspecting an increase in the height (jumping) of each personnel hoist or material hoist is $100.00 plus $50.00 per hour for each hour in addition to 2 hours. This fee is for inspections occurring during regular working hours.

(3) **Variance inspections.**

(a) The fee for an on-site variance inspection is $150.00 per conveyance plus $50.00 per hour for each hour in addition to 2 hours. This fee is for inspections occurring during regular working hours.

(b) The fee for a variance that does not require an on-site inspection is $50.00 per conveyance. The individual requesting the variance must provide the department with pictures, documentation, or other information necessary for the department to review the variance. The department may conduct an on-site variance inspection to verify the information provided or if it determines that an inspection is necessary. If an on-site variance inspection is performed, the fees in (a) of this subsection will apply.

(4) **"Red tag" status fee.** The annual fee for a conveyance in "Red tag" status is $25.00.

Note: You must provide the department with written approval from the building official, indicating that the conveyance is not required for building occupancy, when you apply to have the conveyance placed in voluntary red tag status.

(5) **Decommission inspection.** The fee for performing a decommission inspection is $50.00. Once the decommission inspection has been performed and approved, the conveyance will no longer require annual inspections until such time that the conveyance is brought back into service. Prior to operating the conveyance, a new inspection and annual operating permit must be obtained.

(6) **Voluntary inspections by request.** The owner or potential purchaser of a building within the department's jurisdiction may request a voluntary inspection of a conveyance. The fee for this inspection will be $100.00 per conveyance and $50.00 per hour for each hour in addition to 2 hours plus the standard per diem and mileage allowance granted to department inspectors. The owner/potential purchaser requesting the voluntary inspection will not be subject to any penalties based on the inspector's findings.

[Statutory Authority: RCW 70.87.020, 70.87.030, 70.87.034, 70.87.120, 70.87.185, 70.87.190, 2002 c 98, 2003 c 143 and 2004 c 66. 04-12-047, § 296-96-01035, filed 5/28/04, effective 6/30/04. Statutory Authority: RCW 43.22.350, 43.22.434, 43.22.480, 43.22.500, 18.27.040, 18.27.070, 18.27.075, 70.87.030, 19.28.041, 19.28.051, 19.28.101, 19.28.121, 19.28.161, 19.28.201, 19.28.211, 19.28.341, 2001 c 7, 2002 c 249, and chapters 19.28, 43.22, 18.27, and 70.87 RCW. 02-12-022, § 296-96-01035, filed 5/28/02, effective 6/28/02. Statutory Authority: RCW 43.22.350, 43.22.434, 43.22.480, 43.22.500, 18.27.070, 18.27.075, 70.87.030, 19.28.041, 19.28.051, 19.28.101, 19.28.121, 19.28.161, 19.28.201, 19.28.211, 19.28.341, 2001 c 159, and chapters 43.22, 19.28, 18.27, and 70.87 RCW. 01-12-035, § 296-96-01035, filed 5/29/01, effective 6/29/01. Statutory Authority: RCW 70.87.020, 70.87.030, 70.87.034, 70.87.120, 70.87.185 and chapter 70.87 RCW. 01-02-026, § 296-96-01035, filed 12/22/00, effective 1/22/01.]

WAC 296-96-01040 What is the fee for testing and inspecting regular elevators used as temporary elevators to provide transportation for construction personnel, tools, and materials only? (1) The fee for the inspecting and testing of regular elevators used as temporary elevators is $80.00, in addition to any other fees required in this chapter. This fee purchases a 30-day temporary use permit that may be renewed at the department's discretion.

(2) When this temporary use permit is purchased, a notice declaring that the equipment has not received final approval from the department must be conspicuously posted in the elevator.

[Statutory Authority: RCW 43.22.350, 43.22.434, 43.22.480, 43.22.500, 18.27.040, 18.27.070, 18.27.075, 70.87.030, 19.28.041, 19.28.051, 19.28.101, 19.28.121, 19.28.161, 19.28.201, 19.28.211, 19.28.341, 2001 c 7, 2002 c 249, and chapters 19.28, 43.22, 18.27, and 70.87 RCW. 02-12-022, § 296-96-01040, filed 5/28/02, effective 6/28/02. Statutory Authority: RCW 43.22.350, 43.22.434, 43.22.480, 43.22.500, 18.27.070, 18.27.075, 70.87.030, 19.28.041, 19.28.051, 19.28.101, 19.28.121, 19.28.161, 19.28.201, 19.28.211, 19.28.341, 2001 c 159, and chapters 43.22, 19.28, 18.27, and 70.87 RCW. 01-12-035, § 296-96-01040, filed 5/29/01, effective 6/29/01. Statutory Authority: RCW 70.87.020, 70.87.030, 70.87.034, 70.87.120, 70.87.185 and chapter 70.87 RCW. 01-02-026, § 296-96-01040, filed 12/22/00, effective 1/22/01.]

WAC 296-96-01045 What are the inspection requirements and fees for conveyances in private residences? (1) Chapter 70.87 RCW requires the department to inspect all new, altered or relocated conveyances operated exclusively for single-family use in private residences. Prior to inspection, you must complete a permit application as described in WAC 296-96-01005 and pay the appropriate fee listed in WAC 296-96-01010.

(2) Chapter 70.87 RCW allows the department to inspect conveyances operated exclusively for single-family use in private residences when the department is investigating an accident or an alleged or apparent violation of the statute or these rules.

(3) No annual inspection and operating permit is required for a private residence conveyance operated exclusively for single-family use unless the owner requests it. When an owner requests an inspection and an annual operating permit, the following fee must be paid prior to an inspection:

TYPE OF CONVEYANCE	FEE
Each inclined stairway chair lift in private residence	$23.40
Each inclined wheel chair lift in a private residence	23.40
Each vertical wheel chair lift in a private residence	29.60
Each dumbwaiter in a private residence	23.40
Each inclined elevator at a private residence	83.20
Each private residence elevator	53.60
Duplication of a lost, damaged or stolen operating permit	10.00

[Statutory Authority: RCW 43.22.350, 43.22.434, 43.22.480, 43.22.500, 18.27.040, 18.27.070, 18.27.075, 70.87.030, 19.28.041, 19.28.051, 19.28.101, 19.28.121, 19.28.161, 19.28.201, 19.28.211, 19.28.341, 2001 c 7, 2002 c 249, and chapters 19.28, 43.22, 18.27, and 70.87 RCW. 02-12-022, § 296-96-01045, filed 5/28/02, effective 6/28/02. Statutory Authority: RCW 43.22.350, 43.22.434, 43.22.480, 43.22.500, 18.27.070, 18.27.075, 70.87.030, 19.28.041, 19.28.051, 19.28.101, 19.28.121, 19.28.161, 19.28.201, 19.28.211, 19.28.341, 2001 c 159, and chapters 43.22, 19.28, 18.27, and 70.87 RCW. 01-12-035, § 296-96-01045, filed 5/29/01, effective 6/29/01. Statutory Authority: RCW 70.87.020, 70.87.030, 70.87.034, 70.87.120, 70.87.185 and chapter 70.87 RCW. 01-02-026, § 296-96-01045, filed 12/22/00, effective 1/22/01.]

WAC 296-96-01050 How do I get a supplemental inspection? Any person, firm, corporation or governmental agency can request a supplemental inspection from the department by paying a fee of $60.00 per hour (including travel time) plus the standard per diem and mileage allowance granted to department inspectors. This fee is for inspections occurring during regular working hours.

[Statutory Authority: RCW 43.22.350, 43.22.434, 43.22.480, 43.22.500, 70.87.030, 18.106.070, 18.106.125, 2001 c 7, and chapters 18.106, 43.22, and 70.87 RCW. 03-12-045, § 296-96-01050, filed 5/30/03, effective 6/30/03. Statutory Authority: RCW 43.22.350, 43.22.434, 43.22.480, 43.22.500, 18.27.040, 18.27.070, 18.27.075, 70.87.030, 19.28.041, 19.28.051, 19.28.101, 19.28.121, 19.28.161, 19.28.201, 19.28.211, 19.28.341, 2001 c 7, 2002 c 249, and chapters 19.28, 43.22, 18.27, and 70.87 RCW. 02-12-022, § 296-96-01050, filed 5/28/02, effective 6/28/02. Statutory Authority: RCW 43.22.350, 43.22.434, 43.22.480, 43.22.500, 18.27.070, 18.27.075, 70.87.030, 19.28.041, 19.28.051, 19.28.101, 19.28.121, 19.28.161, 19.28.201, 19.28.211, 19.28.341, 2001 c 159, and chapters 43.22, 19.28, 18.27, and 70.87 RCW. 01-12-035, § 296-96-01050, filed 5/29/01, effective 6/29/01. Statutory Authority: RCW 70.87.020, 70.87.030, 70.87.034, 70.87.120, 70.87.185 and chapter 70.87 RCW. 01-02-026, § 296-96-01050, filed 12/22/00, effective 1/22/01.]

WAC 296-96-01055 Are technical services available and what is the fee? You may request elevator field technical services from the department by paying a fee of $60.00 per hour (including travel time) plus the standard per diem and mileage allowance granted to department inspectors. These field technical services may include code evaluation, code consultation, plan examination, code interpretation and clarification of technical data relating to the application of the department's conveyance rules. Field technical services do not include inspections.

[Statutory Authority: RCW 43.22.350, 43.22.434, 43.22.480, 43.22.500, 70.87.030, 18.106.070, 18.106.125, 2001 c 7, and chapters 18.106, 43.22, and 70.87 RCW. 03-12-045, § 296-96-01055, filed 5/30/03, effective 6/30/03. Statutory Authority: RCW 43.22.350, 43.22.434, 43.22.480, 43.22.500, 18.27.040, 18.27.070, 18.27.075, 70.87.030, 19.28.041, 19.28.051, 19.28.101, 19.28.121, 19.28.161, 19.28.201, 19.28.211, 19.28.341, 2001 c 7, 2002 c 249, and chapters 19.28, 43.22, 18.27, and 70.87 RCW. 02-12-022, § 296-96-01055, filed 5/28/02, effective 6/28/02. Statutory Authority: RCW 43.22.350, 43.22.434, 43.22.480, 43.22.500, 18.27.070, 18.27.075, 70.87.030, 19.28.041, 19.28.051, 19.28.101, 19.28.121, 19.28.161, 19.28.201, 19.28.211, 19.28.341, 2001 c 159, and chapters 43.22, 19.28, 18.27, and 70.87 RCW. 01-12-035, § 296-96-01055, filed 5/29/01, effective 6/29/01. Statutory Authority: RCW 70.87.020, 70.87.030, 70.87.034, 70.87.120, 70.87.185 and chapter 70.87 RCW. 01-02-026, § 296-96-01055, filed 12/22/00, effective 1/22/01.]

WAC 296-96-01060 Can I request an after hours inspection and what is the fee? You may request an inspection outside of normal business hours, which are 7:00 a.m. to 5:00 p.m., if an inspector is available and the inspection is authorized by the department. The minimum fee for an after-hours inspection is $75.00 and $75.00 per hour for each hour in addition to the first hour plus the standard per diem and mileage allowance granted to department inspectors. This fee is in addition to any other fees required for your project.

[Statutory Authority: RCW 43.22.350, 43.22.434, 43.22.480, 43.22.500, 18.27.040, 18.27.070, 18.27.075, 70.87.030, 19.28.041, 19.28.051, 19.28.101, 19.28.121, 19.28.161, 19.28.201, 19.28.211, 19.28.341, 2001 c 7, 2002 c 249, and chapters 19.28, 43.22, 18.27, and 70.87 RCW. 02-12-022, § 296-96-01060, filed 5/28/02, effective 6/28/02. Statutory Authority: RCW 43.22.350, 43.22.434, 43.22.480, 43.22.500, 18.27.070, 18.27.075, 70.87.030, 19.28.041, 19.28.051, 19.28.101, 19.28.121, 19.28.161, 19.28.201, 19.28.211, 19.28.341, 2001 c 159, and chapters 43.22, 19.28, 18.27, and 70.87 RCW. 01-12-035, § 296-96-01060, filed 5/29/01, effective 6/29/01. Statutory Authority: RCW 70.87.020, 70.87.030, 70.87.034, 70.87.120, 70.87.185 and chapter 70.87 RCW. 01-02-026, § 296-96-01060, filed 12/22/00, effective 1/22/01.]

WAC 296-96-01065 What are the annual operating permits fees? An annual operating permit will be issued to you upon payment of the appropriate fee:

TYPE OF CONVEYANCE	FEE
Each hydraulic elevator	$100.00
Each roped-hydraulic elevator	125.00
plus for each hoistway opening in excess of two	10.00
Each cable elevator	125.00
plus for each hoistway opening in excess of two	10.00
Each cable elevator traveling more than 25 feet without an opening—for each 25 foot traveled	10.00
Each limited-use/limited-application (—LULA) elevator	100.00
Each escalator	83.10
Each dumbwaiter in other than a private residence	53.60
Each material lift	100.00
Each incline elevator in other than a private residence	107.50
Each belt manlift	100.00
Each stair lift in other than a private residence	53.60
Each wheel chair lift in other than a private residence	53.60
Each personnel hoist	100.00
Each grain elevator personnel lift	83.10
Each material hoist	100.00
Each special purpose elevator	100.00
Each private residence elevator installed in other than a private residence	100.00
Each casket lift	83.10
Each sidewalk freight elevator	83.10
Each hand-powered manlift or freight elevator	56.30
Each boat launching elevator	83.10
Each auto parking elevator	83.10
Each moving walk	83.10
Duplication of a damaged, lost or stolen operating permit	10.00

[Statutory Authority: RCW 43.22.350, 43.22.434, 43.22.480, 43.22.500, 18.27.040, 18.27.070, 18.27.075, 70.87.030, 19.28.041, 19.28.051, 19.28.101, 19.28.121, 19.28.161, 19.28.201, 19.28.211, 19.28.341, 2001 c 7, 2002 c 249, and chapters 19.28, 43.22, 18.27, and 70.87 RCW. 02-12-022, § 296-96-01065, filed 5/28/02, effective 6/28/02. Statutory Authority: RCW 43.22.350, 43.22.434, 43.22.480, 43.22.500, 18.27.070, 18.27.075, 70.87.030, 19.28.041, 19.28.051, 19.28.101, 19.28.121, 19.28.161, 19.28.201, 19.28.211, 19.28.341, 2001 c 159, and chapters 43.22, 19.28, 18.27, and 70.87 RCW. 01-12-035, § 296-96-01065, filed 5/29/01, effective 6/29/01. Statutory Authority: RCW 70.87.020, 70.87.030, 70.87.034, 70.87.120, 70.87.185 and chapter 70.87 RCW. 01-02-026, § 296-96-01065, filed 12/22/00, effective 1/22/01.]

WAC 296-96-01070 What are the civil (monetary) penalties for violating the conveyance permit and operation requirements of chapter 70.87 RCW and this chapter? (1) Any licensee, installer, owner or operator of a conveyance who violates a provision of chapter 70.87 RCW or this chapter shall be subject to the following civil penalties:

(a)	Operation of a conveyance without a permit:	
	First violation	$150.00
	Second violation	300.00
	Each additional violation	500.00

(b)	Installation of a conveyance without a permit:	
	First violation	$150.00
	Second violation	300.00
	Each additional violation	500.00
(c)	Relocation of a conveyance without a permit:	
	First violation	$150.00
	Second violation	300.00
	Each additional violation	500.00
(d)	Alteration of a conveyance without a permit:	
	First violation	$150.00
	Second violation	300.00
	Each additional violation	500.00
(e)	(i) Operation of a conveyance for which the department has issued a red tag or has revoked or suspended an operating permit or operation of a decommissioned elevator	$500.00
	(ii) Removal of a red tag from a conveyance	$500.00
(f)	Failure to comply with a correction notice:	
	Within 90 days	$100.00
	Between 91 and 180 days	250.00
	Between 181 and 270 days	400.00
	Between 271 and 360 days	500.00
	Each 30 days after 360 days	500.00
	Note: Penalties cumulate	
(g)	Failure to submit official written notification that all corrections have been completed:	
	Within 90 days	$100.00
	Between 91 and 180 days	250.00
	Between 181 and 270 days	400.00
	Between 271 and 360 days	500.00
	Each 30 days after 360 days	500.00
	Note: Penalties cumulate	
(h)	Failure to notify the department of each accident to a person requiring the services of a physician or resulting in a disability exceeding one day may result in a $500 penalty per day. The conveyance must be removed from service until the department authorizes the operation of the conveyance. This may require an inspection and the applicable fees will be applied. Failure to remove the conveyance from service may result in an additional $500 penalty per day.	

(2) A violation as described in subsection (1)(a), (b), (c), and (d) of this section will be a "second" or "additional" violation only if it occurs within one year of the first violation.

(3) The department must serve notice by certified mail to an installer, licensee, owner, or operator for a violation of chapter 70.87 RCW, or this chapter.

[Statutory Authority: RCW 70.87.020, 70.87.030, 70.87.034, 70.87.120, 70.87.185, 70.87.190, 2002 c 98, 2003 c 143 and 2004 c 66. 04-12-047, § 296-96-01070, filed 5/28/04, effective 6/30/04. Statutory Authority: RCW 70.87.020, 70.87.030, 70.87.034, 70.87.120, 70.87.185 and chapter 70.87 RCW. 01-02-026, § 296-96-01070, filed 12/22/00, effective 1/22/01.]

WAC 296-96-01075 How does an owner or licensee receive a variance from the installation and alteration requirements of chapter 70.87 RCW and this chapter? Variances from the installation and alteration requirements of this chapter may be requested. The variance request shall be in writing on a form approved by the department accompanied with the required fee. The individual requesting the variance must provide the department with pictures, documentation, or other information necessary for the department to review the variance. The department may conduct an on-site variance inspection to verify the information provided or if it determines that an inspection is necessary. If an on-site variance inspection is performed, the fees in WAC 296-96-01035 will also apply.

[Statutory Authority: RCW 70.87.020, 70.87.030, 70.87.034, 70.87.120, 70.87.185, 70.87.190, 2002 c 98, 2003 c 143 and 2004 c 66. 04-12-047, § 296-96-01075, filed 5/28/04, effective 6/30/04.]

PART C - REGULATIONS FOR NEW AND ALTERED ELEVATORS AND LIFTING DEVICES

NOTE: The following rules set the minimum standard for all new installations and, where applicable, alterations.

WAC 296-96-02230 When must the department be notified for a new or altered inspection? (1) The person or firm installing, relocating, or altering a conveyance shall notify the department in writing, at least seven days before requesting any inspection of the work, and shall subject the new, moved, or altered portions of the conveyance to the acceptance tests.

(2) The department may grant exceptions to this notice requirement.

[Statutory Authority: RCW 70.87.020, 70.87.030, 70.87.034, 70.87.120, 70.87.185, 70.87.190, 2002 c 98, 2003 c 143 and 2004 c 66. 04-12-047, § 296-96-02230, filed 5/28/04, effective 6/30/04.]

WAC 296-96-02232 What are the conditions for obtaining a temporary operating permit? (1) Hydraulic elevators with less than four stops may not be issued a temporary operating permit unless preapproved by the department. In order to obtain a permit:

(a) The elevator must pass load tests and safety circuit inspections.

(b) Temporary or permanent lights in the cab, machine room and at the landings must be provided.

(c) Machine rooms must be fully enclosed and have a lockable door.

(d) Hoistways must be fully enclosed.

(e) A single means of disconnecting the elevator must be provided and related equipment must be identified by the use of numbers or letters on the disconnect, the controller, the drive machine, the cross head, and the car operating panel.

(f) Elevator cab interiors must be completed. Temporary cabs may be used and walls must be covered with fire retardant materials.

(g) The key operation of Phase I must recall the elevator.

(h) A means of emergency communication with the elevator must be provided. If there is no permanent method of

emergency communication an operator with communication equipment must be provided.

(2) The person operating the permitted conveyance under this section must be properly trained in operation and safety and:

(a) The operator must be on the elevator whenever it is in use. The operator may be one of your employees.

(b) He or she must be designated to be the sole operator of the elevator.

(c) The operator must be trained in the proper operation of the elevator, the proper procedure to handle an emergency and must know who to contact in the event of an emergency involving the operation of the elevator.

(d) The operator must carry a means of two-way communication on his/her person at all times. (This may be in the form of a cell-phone, walkie-talkie, etc., providing proper reception is obtainable at all times.)

[Statutory Authority: RCW 70.87.020, 70.87.030, 70.87.034, 70.87.120, 70.87.185, 70.87.190, 2002 c 98, 2003 c 143 and 2004 c 66. 04-12-047, § 296-96-02232, filed 5/28/04, effective 6/30/04.]

WAC 296-96-02235 What are the requirements for temporary operating permits? (1) A thirty-day temporary operating permit is for transportation of construction personnel and materials only, not for the transportation by the general public.

(2) Temporary operating permits are valid for thirty days.

(3) You must contact the department for a reinspection to renew the permit.

(4) All elevators with expired temporary operating permits that have not passed a final inspection may not be operated.

(5) Renewal of a temporary operating permit is at the discretion of the department.

[Statutory Authority: RCW 70.87.020, 70.87.030, 70.87.034, 70.87.120, 70.87.185, 70.87.190, 2002 c 98, 2003 c 143 and 2004 c 66. 04-12-047, § 296-96-02235, filed 5/28/04, effective 6/30/04.]

WAC 296-96-02240 Where is a shut-off valve required for hydraulic elevators? Two shut-off valves may be required.

(1) ASME requires that a shut-off valve be installed in the machine room.

(2) When the pit is lower than the machine a shut-off valve must be installed in the pit. A separate shut-off valve is not required in the pit for hydraulic elevators equipped with a safety/rupture valve that rotates no more than 180 degrees to stop the flow of hydraulic fluid and has a safety shut-off handle capable of being grasped.

EXCEPTION: Limited use/limited application (LULA), special purpose and residential elevators are exempt from this section.

[Statutory Authority: RCW 70.87.020, 70.87.030, 70.87.034, 70.87.120, 70.87.185, 70.87.190, 2002 c 98, 2003 c 143 and 2004 c 66. 04-12-047, § 296-96-02240, filed 5/28/04, effective 6/30/04. Statutory Authority: RCW 70.87.020, 70.87.030, 70.87.034, 70.87.120, 70.87.185 and chapter 70.87 RCW. 01-02-026, § 296-96-02240, filed 12/22/00, effective 1/22/01.]

WAC 296-96-02275 What are the requirements for Fireman's Service Phase I and Phase II recall? Devices for deactivating recall must be in the line of sight of the elevator; be secure from tampering; and must be accessible to fire, inspection, and elevator service personnel only. Owner-designated patient express and emergency hospital service elevators may have a manual control in the car for use by authorized patient care personnel. When activated, it shall preclude Phase I recall.

The illuminated visual signal in the car that indicates when Phase I Emergency Recall Operation is in effect must stay illuminated until the car is taken off Phase I operation.

Once the car returns to the designated landing on Phase I recall and the doors have reached their full open position, the buzzer must be silenced within ten seconds.

Groups of elevators containing four or more cars shall be provided with two, three-position key switches per group. For purposes of this section, a group shall be defined as all elevators serving the same portion of a building. Hall call buttons common to a group will remain in service unless both Phase I recall switches of a four car or larger group are placed in the recall mode or a fire alarm recall signal is initiated.

EXCEPTION: Limited use/limited application (LULA), special purpose, and residential elevators are exempt from this section.

[Statutory Authority: RCW 70.87.020, 70.87.030, 70.87.034, 70.87.120, 70.87.185, 70.87.190, 2002 c 98, 2003 c 143 and 2004 c 66. 04-12-047, § 296-96-02275, filed 5/28/04, effective 6/30/04. Statutory Authority: RCW 70.87.020, 70.87.030, 70.87.034, 70.87.120, 70.87.185 and chapter 70.87 RCW. 01-02-026, § 296-96-02275, filed 12/22/00, effective 1/22/01.]

WAC 296-96-02276 What are the requirements for sprinklers in hoistways and machine rooms? (1) The machine room sprinkler piping must terminate in the machine room. The sprinkler piping must not run through the machine room to other spaces.

(2) The hoistway must not be used to supply sprinkler runs to more than one floor.

(3) The pit will be considered as a floor level.

(4) Sprinkler heads at the top of the shaft must terminate in the shaft. The sprinkler must not run through the hoistway to other spaces. "Other spaces" includes the machine room.

(5) All risers and returns must be located outside of the hoistway and machine room.

[Statutory Authority: RCW 70.87.020, 70.87.030, 70.87.034, 70.87.120, 70.87.185, 70.87.190, 2002 c 98, 2003 c 143 and 2004 c 66. 04-12-047, § 296-96-02276, filed 5/28/04, effective 6/30/04.]

WAC 296-96-02277 How does the department enforce ASME requirements for sprinklers, smoke detectors, and heat detectors in hoistways and machine rooms? ASME A17.2.8.2.3.2 states: "Means shall be provided to automatically disconnect the mainline power supply to the affected elevator upon or prior to the application of water from sprinklers located in the machine room or in the hoistway more than 600 mm (24 inches) above the pit floor. This means shall be independent of the elevator control and shall not be self-resetting. The activation of sprinklers outside the hoistway or machine room shall not disconnect the main line power supply." This section applies to both new and altered elevators when sprinklers have been installed in the elevator machine room and/or hoistway.

(1) The department enforces this rule as follows:

(a) When sprinkler systems are installed in an elevator hoistway, fixed temperature heat detectors, set only at 135°F, must be located at the top of the hoistway. If sprinklers are

installed in the machine room, the same rule applies to heat detectors in the machine room. If heat detectors are installed, smoke detectors must also be installed for elevator recall. The purpose of the heat detector is to automatically disconnect mainline power to the elevator before water flows from any sprinkler associated with the elevator system.

(b) Activation of a smoke detector or other initiating device at the top of the hoistway shall cause all elevators having any equipment in that hoistway, and any associated elevators of a group automatic operation, to be returned nonstop to the designated level.

(c) Heat detectors must be:

(i) Located within 18 inches of each sprinkler head, as required by the local building official, or as required by NFPA 13.

(ii) Ceiling mounted. However, pit detectors, if installed, may only be used as a signaling device and wall-mounted if they are so designed.

(iii) Heat detectors are not required in pits provided the automatic sprinkler heads are installed in such a way that the water spray pattern does not spray higher than three feet above the pit floor with a spray pattern directed level and down. The shunt trip disconnect must be installed in the machine room or machinery space and it must be easily identifiable.

(d) The shunt trip disconnect must be installed in the machine room or machinery space and it must be easily identifiable.

(e) Power for the automatic disconnect control circuit must be derived from a 120 volt separate branch circuit. Circuit location must be identified on or next to the elevator disconnects. An illuminated visual device must be installed in the machine room adjacent to each elevator's disconnect. The purpose of this visual device is to indicate that power is available to the shunt trip activation mechanism.

(f) All electrical equipment and wiring associated with shunt trip devices must conform to the applicable ANSI/NFPA 70.

(g) The department does not require sprinkler shut-off valves. However, where they are installed, they must be located in an accessible place outside the hoistway, machine room or machinery space with their handles placed at no more than 6 feet above the floor.

(h) Emergency return units must be disabled when the shunt trip is activated.

(2) Alternative methods used to achieve ASME A17.2.8.2.3.2 must be approved by the department prior to installation.

EXCEPTION: Limited use/limited application (LULA), special purpose, and residential elevators are exempt from this section.

[Statutory Authority: RCW 70.87.020, 70.87.030, 70.87.034, 70.87.120, 70.87.185, 70.87.190, 2002 c 98, 2003 c 143 and 2004 c 66. 04-12-047, § 296-96-02277, filed 5/28/04, effective 6/30/04. Statutory Authority: RCW 70.87.020, 70.87.030, 70.87.034, 70.87.120, 70.87.185 and chapter 70.87 RCW. 01-02-026, § 296-96-02277, filed 12/22/00, effective 1/22/01.]

WAC 296-96-02278 Are keys required to be on-site? Yes. The keys to the machine room and the keys that are necessary to operate the elevator must be located in a locked key retainer box in the elevator lobby at the designated level above the hall buttons; or located by machine room doors at no more than six feet above the floor, provided access to the key box doesn't require passage through locked doors. The key retainer box must be:

- Readily accessible to authorized personnel;
- Clearly labeled "elevator";
- Securely mounted; and
- Equipped with a 1-inch cylinder cam lock key #39504 and securely mounted.

Further:

- Keys for access to elevator machine rooms and for operating elevator equipment must be tagged and kept in the key box.
- The key box must contain all keys necessary for inspection of the elevator.
- Mechanical hoistway access devices must be located in the key box or machine room.

EXCEPTION: Residential elevators are exempt from this section.

[Statutory Authority: RCW 70.87.020, 70.87.030, 70.87.034, 70.87.120, 70.87.185, 70.87.190, 2002 c 98, 2003 c 143 and 2004 c 66. 04-12-047, § 296-96-02278, filed 5/28/04, effective 6/30/04. Statutory Authority: RCW 70.87.020, 70.87.030, 70.87.034, 70.87.120, 70.87.185 and chapter 70.87 RCW. 01-02-026, § 296-96-02278, filed 12/22/00, effective 1/22/01.]

WAC 296-96-02280 Can pipes and ducts be installed above a machine room? Electric conduit, pipes, and ducts may be installed in the upper space ("upper space" is defined as the space above the fire-rated ceiling) of the elevator machine room as long as they are installed above the required seven-foot clearance and they do not interfere with the elevator equipment which also must be installed to allow a seven-foot head clearance.

(1) Straight through runs of electrical conduit without junction boxes may be installed in this space.

(2) Pipes and ducts conveying gases, vapor, or liquids may be installed in the space above the machine room provided they are encased in a noncombustible secondary pipe without joints, or a moisture barrier without penetration.

EXCEPTION: Residential elevators are exempt from this section.

[Statutory Authority: RCW 70.87.020, 70.87.030, 70.87.034, 70.87.120, 70.87.185, 70.87.190, 2002 c 98, 2003 c 143 and 2004 c 66. 04-12-047, § 296-96-02280, filed 5/28/04, effective 6/30/04. Statutory Authority: RCW 70.87.020, 70.87.030, 70.87.034, 70.87.120, 70.87.185 and chapter 70.87 RCW. 01-02-026, § 296-96-02280, filed 12/22/00, effective 1/22/01.]

WAC 296-96-02281 What is required for emergency escape hatches? Emergency escape hatches must be hinged and secured from the car top so that the cover opens from the top of the car only. The hatch must be able to be opened without the use of tools.

[Statutory Authority: RCW 70.87.020, 70.87.030, 70.87.034, 70.87.120, 70.87.185, 70.87.190, 2002 c 98, 2003 c 143 and 2004 c 66. 04-12-047, § 296-96-02281, filed 5/28/04, effective 6/30/04. Statutory Authority: RCW 70.87.020, 70.87.030, 70.87.034, 70.87.120, 70.87.185 and chapter 70.87 RCW. 01-02-026, § 296-96-02281, filed 12/22/00, effective 1/22/01.]

WAC 296-96-02282 What is required for fire fighters' service? It is the owner's responsibility to test fire fighters' service operation of Phase I and Phase II key switches quarterly. A log with dates and the initials of the person performing the test must be posted in the machine room.

EXCEPTION: Limited use/limited application (LULA), special purpose, and residential elevators are exempt from this section.

[Statutory Authority: RCW 70.87.020, 70.87.030, 70.87.034, 70.87.120, 70.87.185, 70.87.190, 2002 c 98, 2003 c 143 and 2004 c 66. 04-12-047, § 296-96-02282, filed 5/28/04, effective 6/30/04.]

WAC 296-96-02283 What is the minimum working space required in machine rooms? (1) In machine rooms with equipment requiring maintenance and inspection, an eighteen-inch working space must be established.

(2) There must be a minimum of eighteen inches working space (other than the required controller panel clearances) on either side of the hydraulic tank.

(3) The requirements in subsections (1) and (2) of this section do not supersede NFPA 70.

(4) The side with the hydraulic outlet pipe is not considered usable working space.

[Statutory Authority: RCW 70.87.020, 70.87.030, 70.87.034, 70.87.120, 70.87.185, 70.87.190, 2002 c 98, 2003 c 143 and 2004 c 66. 04-12-047, § 296-96-02283, filed 5/28/04, effective 6/30/04.]

WAC 296-96-02285 Are there exceptions for correction facility elevators? Facilities that require special consideration to ensure the safety of security personnel and to prevent escapes must meet the relevant requirements of ASME A17.1, except that accessible "in-car" stop switches and signaling devices are not required when the elevator operation is:

(1) Continually monitored by audio-visual equipment; and

(2) Remotely controlled from a single location.

(3) Controls necessary for an elevator's operation may be located inside a car when the operating panel has a locked cover.

[Statutory Authority: RCW 70.87.020, 70.87.030, 70.87.034, 70.87.120, 70.87.185, 70.87.190, 2002 c 98, 2003 c 143 and 2004 c 66. 04-12-047, § 296-96-02285, filed 5/28/04, effective 6/30/04.]

WAC 296-96-02290 What are the requirements for underground hydraulic elevator pipes, fittings, and cylinders? All newly installed underground pressure cylinders and pipes containing hydraulic elevator fluids shall be encased in an outer plastic containment.

(1) The plastic casing shall be constructed of polyethylene or polyvinyl chloride (PVC). The plastic pipe wall thickness must not be less than 0.125 inches (3.175 mm). The casing shall be capped at the bottom and all joints must be solvent or heat welded.

(2) The casing shall be sealed and dry around hydraulic pipe and cylinder to contain any leakage into the ground and to prevent electrolysis to the hydraulic pipe and the cylinder. Dry sand may be used to stabilize the hydraulic cylinder.

(3) A one-half inch pipe nipple with a one-way check valve shall be located between the casing and cylinder for monitoring purposes.

(4) Alternate methods must receive approval from the department prior to installation.

(5) This rule shall apply to all conveyances with installation permits issued by the department on or after the effective date of these rules.

[Statutory Authority: RCW 70.87.020, 70.87.030, 70.87.034, 70.87.120, 70.87.185, 70.87.190, 2002 c 98, 2003 c 143 and 2004 c 66. 04-12-047, § 296-96-02290, filed 5/28/04, effective 6/30/04.]

WAC 296-96-02300 Are self-leveling devices required? Automatic elevators must be equipped with a self-leveling device that:

(1) Operates automatically;

(2) Stops the car at each floor landing within a tolerance of plus or minus 1/2 inch under normal loading and unloading conditions;

(3) Functions independently of the car's operating device;

(4) Corrects for over-travel and under-travel; and

(5) Always maintains the car within a tolerance of plus or minus 1/2 inch with the landing regardless of load.

[Statutory Authority: RCW 70.87.020, 70.87.030, 70.87.034, 70.87.120, 70.87.185 and chapter 70.87 RCW. 01-02-026, § 296-96-02300, filed 12/22/00, effective 1/22/01.]

WAC 296-96-02306 Is a door reopening device required on automatic-closing car doors? (1) If an elevator car door closes automatically, a door reopening device must be installed that:

(a) Stops and reopens the car door and the adjacent hoist-way door whenever the car door is obstructed while closing;

(b) Is activated by a sensor, not physical contact;

(c) Is capable of sensing an object or a person in the path of the closing car door; and

(2) The sensing device can be located along the entire edge of the door. When used with a manually operated device (safety edge), a minimum of two sensing devices must be installed between 5 and 29 inches above the floor.

[Statutory Authority: RCW 70.87.020, 70.87.030, 70.87.034, 70.87.120, 70.87.185 and chapter 70.87 RCW. 01-02-026, § 296-96-02306, filed 12/22/00, effective 1/22/01.]

WAC 296-96-02310 What is the minimum acceptable initial transfer time for an elevator door? "Initial transfer time" refers to the period of time between an elevator car receiving a call for service and when the car door begins to close. The minimum acceptable initial transfer time for an elevator is:

(1) For HALL CALLS, minimum acceptable initial transfer time is based upon the distance between a point in the center of the corridor or lobby (maximum 5 feet) that is directly opposite the farthest hall button controlling the car and the centerline of the hoist-way entrance. Minimum acceptable times for specific distances are:

(a) 0-5 feet: 4 seconds;

(b) 10 feet: 7 seconds;

(c) 15 feet: 10 seconds; and

(d) 20 feet: 13 seconds.

(2) For CAR CALLS, the minimum acceptable initial transfer time for doors to remain fully open is 3 seconds.

EXCEPTION: Limited use/limited application (LULA), special purpose, and residential elevators are exempt from this section.

[Statutory Authority: RCW 70.87.020, 70.87.030, 70.87.034, 70.87.120, 70.87.185, 70.87.190, 2002 c 98, 2003 c 143 and 2004 c 66. 04-12-047, § 296-96-02310, filed 5/28/04, effective 6/30/04. Statutory Authority: RCW 70.87.020, 70.87.030, 70.87.034, 70.87.120, 70.87.185 and chapter 70.87 RCW. 01-02-026, § 296-96-02310, filed 12/22/00, effective 1/22/01.]

WAC 296-96-02315 What are the minimum cab size and other applicable requirements for car interiors? (1) All car interiors must be constructed to allow wheelchair users to enter the car, to maneuver within reach of the control panel and to exit the car.

(2) Minimum door width must be 36 inches.

(3) Minimum cab depth:

(a) From the rear wall to the return panel must be 51 inches; and

(b) From the rear wall to the inside face of the cab door must be 54 inches.

(4) For cabs with side-opening doors, the minimum cab width is 68 inches;

(5) For cabs with center-opening doors, the minimum cab width is 80 inches;

(6) Maximum clearance between a car platform sill and the edge of a hoistway landing sill must be 1 1/4 inch; and

(7) If the building official having jurisdiction determines the elevator must comply with accessibility requirements, the elevator must comply with subsections (1) through (6) of this section.

EXCEPTION 1: Elevators located in existing school buildings or other buildings specifically identified by local authorities may have a minimum clear distance between walls or between a wall and the door, including the return panel, of 54 inches, and a minimum distance from the wall to the return panel of 51 inches.

EXCEPTION 2: LULA, special purpose, and residential elevators must meet the specifications in ASME A17.1 pertaining to car size.

[Statutory Authority: RCW 70.87.020, 70.87.030, 70.87.034, 70.87.120, 70.87.185, 70.87.190, 2002 c 98, 2003 c 143 and 2004 c 66. 04-12-047, § 296-96-02315, filed 5/28/04, effective 6/30/04. Statutory Authority: RCW 70.87.020, 70.87.030, 70.87.034, 70.87.120, 70.87.185 and chapter 70.87 RCW. 01-02-026, § 296-96-02315, filed 12/22/00, effective 1/22/01.]

WAC 296-96-02317 When does the department require a local building official to sign off for the installation of LULAs, stair lifts, inclined wheelchair lifts and vertical wheelchair lifts? In existing buildings where LULAs, stair lifts, inclined wheelchair lifts and vertical wheelchair lifts are to be installed, the local building official must signify that he/she is allowing this type of conveyance on a form provided by the department.

[Statutory Authority: RCW 70.87.020, 70.87.030, 70.87.034, 70.87.120, 70.87.185, 70.87.190, 2002 c 98, 2003 c 143 and 2004 c 66. 04-12-047, § 296-96-02317, filed 5/28/04, effective 6/30/04.]

WAC 296-96-02318 What are the general requirements for LULA elevators? (1) LULAs may be permitted in churches, private clubs, and buildings listed on the historical register that are not required to comply with accessibility requirements.

(2) Installation of LULAs in existing buildings that are not required to comply with accessibility requirements, will be considered on a case-by-case basis by the department.

(3) For LULAs installed according to subsections (1) and (2) of this section a form provided by the department must be signed by the local building official.

(4) LULAs must be equipped with an emergency communication device meeting the requirements of WAC 296-96-02330.

[Statutory Authority: RCW 70.87.020, 70.87.030, 70.87.034, 70.87.120, 70.87.185, 70.87.190, 2002 c 98, 2003 c 143 and 2004 c 66. 04-12-047, § 296-96-02318, filed 5/28/04, effective 6/30/04.]

WAC 296-96-02320 What is required for car controls? (1) The following requirements apply to the location of car controls:

(a) Upon entering an elevator, at least one set of controls must be readily accessible from a wheelchair;

(b) The centerline of the alarm button and emergency stop switch must be 35 inches;

(c) Where a side approach is used, the highest floor buttons must be no higher than 54 inches from the floor;

(d) Where a forward approach is used, the highest floor buttons must be no higher than 48 inches from the floor;

(e) Emergency controls must be grouped together at the bottom of the control panel and centered at 35 inches; and

(f) Controls unessential to the elevator's operation may be located in a convenient place.

(2) The following requirements apply to the construction of control panels:

(a) Raised or flush floor registration buttons, exclusive of the panel border, must be at least 3/4 inch and arranged from left to right in ascending order.

(b) When pushed, the depth of flush buttons must not exceed 3/8 inch.

(c) Indicator lights must be installed to show each call registered and they must extinguish when a call is answered.

(d) All markings must be located to the left of and adjacent to the car controls on a contrasting color background.

(e) All letters or numbers must be at least 5/8 inches high and must be raised .030 of an inch.

(f) Braille must be used to identify all control buttons. Permanently attached plates are acceptable.

(g) Standard ASME A17.1 symbols must be used to identify essential controls.

EXCEPTION: Special purpose and residential elevators are exempt from this section.

[Statutory Authority: RCW 70.87.020, 70.87.030, 70.87.034, 70.87.120, 70.87.185, 70.87.190, 2002 c 98, 2003 c 143 and 2004 c 66. 04-12-047, § 296-96-02320, filed 5/28/04, effective 6/30/04. Statutory Authority: RCW 70.87.020, 70.87.030, 70.87.034, 70.87.120, 70.87.185 and chapter 70.87 RCW. 01-02-026, § 296-96-02320, filed 12/22/00, effective 1/22/01.]

WAC 296-96-02325 What are the location and operation requirements for car position indicators in the car? (1) A visual car position indicator must be located either above the car control panel or above the car door.

(2) As the car passes or stops at a floor, the corresponding floor numbers must light up and a signal must sound.

(3) All numerals must be at least 1/2 inch high.

(4) All audible signals must be at least 20 decibels with a frequency no higher than 1500 Hz.

(5) The automatic announcement of a floor number may be substituted for an audible signal.

EXCEPTION: Limited use/limited application (LULA), special purpose, and residential elevators are exempt from this section.

[Statutory Authority: RCW 70.87.020, 70.87.030, 70.87.034, 70.87.120, 70.87.185, 70.87.190, 2002 c 98, 2003 c 143 and 2004 c 66. 04-12-047, § 296-96-02325, filed 5/28/04, effective 6/30/04. Statutory Authority: RCW 70.87.020, 70.87.030, 70.87.034, 70.87.120, 70.87.185 and chapter 70.87 RCW. 01-02-026, § 296-96-02325, filed 12/22/00, effective 1/22/01.]

WAC 296-96-02330 What is required for installation and operation of emergency communication systems? Every elevator must contain an emergency two-way communication system. The installation and operation of this emergency communication system must comply with the ASME A17.1 code in effect when the department issued the elevator's installation permit. In addition to the appropriate ASME A17.1 code, the following department requirements apply:

(1) The communication device located in the elevator car must comply with the following:

(a) The maximum height of any operable part of the communication system is 48 inches above the floor.

(b) Raised symbols and letters must identify the communication system. These symbols and letters must be located adjacent to the communication device. The characters used must be:

(i) At least 5/8 inches but no more than 2 inches high;

(ii) Raised 1/32 inch;

(iii) Upper case;

(iv) Sans serif or simple serif type; and

(v) Accompanied by Grade 2 Braille.

(c) If the system is located in a closed compartment, opening the door to the compartment must:

(i) Require the use of only one hand without tight grasping, pinching, or twisting of the wrist; and

(ii) Require a maximum force of 5 pounds.

(d) The emergency communication system must not be based solely upon voice communication since voice-only systems are inaccessible to people with speech or hearing impairments. An indicator light must be visible when the telephone is activated. This nonverbal means must enable the message recipient to determine the elevator's location address and, when more than one elevator is installed, the elevator's number.

(e) The emergency communication system must use a line that is capable of communicating with and signaling to a person or service that can respond appropriately to the emergency at all times.

(2) A communication device must be installed in the lobby adjacent to the Phase I key switch. This device must be a two-way communication device used to communicate with individuals in the elevator.

(a) The height of any communication device(s) located in the lobby must be located between 48-60 inches above the floor.

(b) Additional communication device(s) may also be located in other parts of the building in addition to the one located in the lobby.

(c) Exception: Elevators that have less than sixty feet of travel do not require an intercom.

(3) Subsections (1) and (2) of this section do not apply to special purpose elevators. However, residential, and special purpose elevators must have a means of communication located inside the elevator cab. This communication device must be available at all times.

EXCEPTION:Residential inclined elevators are exempt from this section.

[Statutory Authority: RCW 70.87.020, 70.87.030, 70.87.034, 70.87.120, 70.87.185, 70.87.190, 2002 c 98, 2003 c 143 and 2004 c 66. 04-12-047, § 296-96-02330, filed 5/28/04, effective 6/30/04. Statutory Authority: RCW 70.87.020, 70.87.030, 70.87.034, 70.87.120, 70.87.185 and chapter 70.87 RCW. 01-02-026, § 296-96-02330, filed 12/22/00, effective 1/22/01.]

WAC 296-96-02340 What requirements apply to the size and location of car handrails? (1) A handrail must be installed on all car walls not used for normal exits. The hand rails must be:

(a) Attached to the wall at a height of between 32 and 35 inches from the floor.

(b) Attached to the wall with a 1 1/2 inch space between the wall and the rail;

(c) Constructed with the hand grip portion not less than 1 1/4 inches but not more than 2 inches wide;

(d) Constructed with a cross-section shape that is substantially oval or round;

(e) Constructed with smooth surfaces and no sharp corners.

Approaching handrail ends on a blank wall in the interior corners of a car do not have to return to the wall. However, if the handrail is located on the closing door wall of a single-slide or two-speed entrance elevator and it projects an abrupt end towards people entering the car, the handrail end must return to the wall.

(2) Residential elevators must have at least one handrail. The handrail must be installed on a car wall not used for normal exits.

EXCEPTION: Special purpose elevators are exempt from this section.

[Statutory Authority: RCW 70.87.020, 70.87.030, 70.87.034, 70.87.120, 70.87.185, 70.87.190, 2002 c 98, 2003 c 143 and 2004 c 66. 04-12-047, § 296-96-02340, filed 5/28/04, effective 6/30/04. Statutory Authority: RCW 70.87.020, 70.87.030, 70.87.034, 70.87.120, 70.87.185 and chapter 70.87 RCW. 01-02-026, § 296-96-02340, filed 12/22/00, effective 1/22/01.]

WAC 296-96-02350 What requirements apply to floor designations on elevator door jambs? Floor designations must be:

(1) Located on both sides of the doorjamb at each hoistway entrance;

(2) Visible from within the car and from the lobby;

(3) Positioned on a centerline height of 60 inches above the floor;

(4) Two inches high and raised 3/10 inch;

(5) Placed on a contrasting color background; and

(6) Accompanied by Grade 2 Braille. Permanently attached plates are acceptable.

EXCEPTION: Special purpose and residential elevators are exempt from this section.

[Statutory Authority: RCW 70.87.020, 70.87.030, 70.87.034, 70.87.120, 70.87.185, 70.87.190, 2002 c 98, 2003 c 143 and 2004 c 66. 04-12-047, § 296-96-02350, filed 5/28/04, effective 6/30/04. Statutory Authority: RCW 70.87.020, 70.87.030, 70.87.034, 70.87.120, 70.87.185 and chapter 70.87 RCW. 01-02-026, § 296-96-02350, filed 12/22/00, effective 1/22/01.]

WAC 296-96-02355 What are the installation and operation requirements for hall buttons? (1) The centerline of all hall call buttons must be 42 inches above the floor.

(2) The "UP" direction button must be on top.

(3) Raised or flush direction buttons, exclusive of the panel border, must be a minimum of 3/4 inch in size.

(4) Indicator lights must be installed to show each call registered and they must extinguish when the call is answered.

(5) When pushed, the depth of flush buttons must not exceed 3/8 inch.

Exception: Special purpose and residential elevators are exempt from this section.
Note: The exception becomes effective August 20, 2004.

[Statutory Authority: Chapter 70.87 RCW. 04-15-104, § 296-96-02355, filed 7/20/04, effective 8/20/04. Statutory Authority: RCW 70.87.020, 70.87.030, 70.87.034, 70.87.120, 70.87.185 and chapter 70.87 RCW. 01-02-026, § 296-96-02355, filed 12/22/00, effective 1/22/01.]

WAC 296-96-02360 What are the requirements for installation and operation of hall lanterns? (1) A visual and audible signal must be installed at each hoistway entrance. These signals must indicate, to the prospective passenger, which car is responding to the call and the direction the car is traveling.

(2) The visual signal for each direction must be at least 2 1/2 inches in size and must be visible from the vicinity of the hall call button.

(3) The audible signal must sound once for "up" and twice for "down."

(4) The centerline of the lantern fixture must be located at least 6 feet above the floor.

(5) Car lanterns may be located either on the jamb or in the car.

EXCEPTION: Limited use/limited application (LULA), special purpose, and residential elevators are exempt from this section.

[Statutory Authority: RCW 70.87.020, 70.87.030, 70.87.034, 70.87.120, 70.87.185, 70.87.190, 2002 c 98, 2003 c 143 and 2004 c 66. 04-12-047, § 296-96-02360, filed 5/28/04, effective 6/30/04. Statutory Authority: RCW 70.87.020, 70.87.030, 70.87.034, 70.87.120, 70.87.185 and chapter 70.87 RCW. 01-02-026, § 296-96-02360, filed 12/22/00, effective 1/22/01.]

WAC 296-96-02361 What are the requirements for electrical main line disconnects? (1) The main line disconnect switch(es) or circuit breaker must be located inside the machine room door on the lock jamb side of the machine room door and not more than twenty-four inches from the jamb to the operating handle; and it must be at a height of not more than sixty-six inches above the finish floor.

(2) For multicar machine rooms the switches shall be grouped together as close as possible to that location.

(3) For machine rooms with double swing doors, the doors must swing out and the switch(es) must be on the wall adjacent to the hinge side of the active door panel.

(4) The switch(es) must be designed so that they may be locked out and tagged in the open position.

EXCEPTION: Special purpose and residential inclined elevators are exempt from this section.

[Statutory Authority: RCW 70.87.020, 70.87.030, 70.87.034, 70.87.120, 70.87.185, 70.87.190, 2002 c 98, 2003 c 143 and 2004 c 66. 04-12-047, § 296-96-02361, filed 5/28/04, effective 6/30/04.]

WAC 296-96-02362 What are the requirements associated with elevator machine rooms? (1) Panels or doors for the purpose of accessing nonelevator equipment are not permitted in elevator machine rooms. Passage through the machine room may not be used to gain access to other parts of the building that do not contain elevator equipment.

(2) The lighting control switch must be located inside the machine room within twenty-four inches of the lock jamb side of the machine room door.

(3) Cooling or venting of the elevator machine room:

(a) When solid state equipment is used to operate the elevators, the elevator machine room must be provided with an independent ventilation or air conditioning system to prevent overheating of the electrical equipment.

(b) The operating temperature shall be established by the elevator equipment manufacturer's specifications. Where no specifications are available, the machine room temperature shall be maintained at no less than fifty-five degrees Fahrenheit and no more than one hundred degrees Fahrenheit.

(c) When standby power is connected to the elevators, the machine room ventilation or air conditioning system shall be connected to the standby power.

(i) All cooling and heating systems must be independent.

(ii) If air conditioners are used, they must service the elevator machine room only. If the air conditioner is mounted overhead, seven feet of headroom clearance must be provided from the underside of the unit to the machine room floor.

(iii) If air exchange is used, it must not draw air from or exhaust air into other parts of the building.

(d) Machine rooms located in underground parking garages must have a means to exchange the air in the machine room. An "exchange of air" is completed through separate intake and exhaust systems.

EXCEPTION: The air in an underground parking garage machine room can be exchanged directly into the parking garage area.

(4) All elevators that are provided with remote elevator machine and/or control rooms must be provided with a permanent means of communication between the elevator car and the remote machine room and/or control room.

(5) Elevator machine room doors must have signs with lettering at least two inches in height with "elevator equipment room authorized personnel only - no storage."

EXCEPTION: Residential conveyances, LULAs and special purpose elevators are exempted from these requirements.

[Statutory Authority: RCW 70.87.020, 70.87.030, 70.87.034, 70.87.120, 70.87.185, 70.87.190, 2002 c 98, 2003 c 143 and 2004 c 66. 04-12-047, § 296-96-02362, filed 5/28/04, effective 6/30/04.]

WAC 296-96-02363 What are the requirements for fire doors installed in front of hoistway doors? If fire and/or smoke doors are required to be installed by the International Building Code or the local building official they must not:

(1) Be permanently attached to the hoistway door assembly.

(2) Encroach upon the full width and height of the hoistway door opening.

[Statutory Authority: RCW 70.87.020, 70.87.030, 70.87.034, 70.87.120, 70.87.185, 70.87.190, 2002 c 98, 2003 c 143 and 2004 c 66. 04-12-047, § 296-96-02363, filed 5/28/04, effective 6/30/04.]

WAC 296-96-02364 What are the requirements for accessing elevated elevator pit equipment? Where elevated pit equipment requires assisted vertical access of more than five feet, a permanent noncombustible working platform shall be provided. Access to the platform must be by a fixed ladder or stair conforming to ANSI A14.3. The platform shall be of sufficient strength to support personnel and may be of open grillwork.

In residential installations where the pit depth exceeds three feet, a fixed vertical ladder, designed to the current adopted rules for commercial installations, must be provided.

[Statutory Authority: RCW 70.87.020, 70.87.030, 70.87.034, 70.87.120, 70.87.185, 70.87.190, 2002 c 98, 2003 c 143 and 2004 c 66. 04-12-047, § 296-96-02364, filed 5/28/04, effective 6/30/04.]

WAC 296-96-02366 What are the requirements for submersible pumps or sumps? Sump pumps and drains are not required in elevator pits. Sump holes must be installed and measure a minimum of 18" x 18" x 18". If drains or sump pumps are installed they must not be directly connected to sewers and/or storm drains. P-traps and check valves are not allowed. All installations must meet the NEC and all plumbing codes.

Sump hole covers must be designed to withstand a load of three hundred pounds per square foot.

[Statutory Authority: RCW 70.87.020, 70.87.030, 70.87.034, 70.87.120, 70.87.185, 70.87.190, 2002 c 98, 2003 c 143 and 2004 c 66. 04-12-047, § 296-96-02366, filed 5/28/04, effective 6/30/04.]

WAC 296-96-02367 What are the requirements for top of car lighting for freight and passenger elevators? A permanently wired work light and outlet shall be installed on the top of freight and passenger elevators. The light(s) shall provide illumination of 10-foot candles across the entire horizontal plane of the top of the car up to a height of six feet. The fixture(s) shall be protected from accidental breakage.

[Statutory Authority: RCW 70.87.020, 70.87.030, 70.87.034, 70.87.120, 70.87.185, 70.87.190, 2002 c 98, 2003 c 143 and 2004 c 66. 04-12-047, § 296-96-02367, filed 5/28/04, effective 6/30/04.]

WAC 296-96-02370 What is required for physically handicapped lifts? (1) All inclined stairway chairlifts and inclined and vertical wheelchair lifts installed in buildings where the conveyance is not visible at all times must be equipped with a standard electric switch Chicago style lock and #2252 key.

(2) All inclined stairway chairlifts and inclined and vertical wheelchair lifts installed in residences licensed as group homes must be equipped with a standard electric key switch Chicago style lock and #2252 key.

(3) All inclined stairway chairlifts and inclined and vertical wheelchair lifts installed in schools, day care centers, churches and other facilities which typically accommodate or provide services for children must also be equipped with a standard electric key switch Chicago style lock and #2252 key.

(4) Where these conveyances are installed outdoors, they must be equipped with either a standard electric key switch Chicago style lock and #2252 key or a timing device. The timing device must not allow the conveyance to run outside of normal business hours.

(5) In locations where the conveyance is not visible at all times, the conveyance must be equipped with a means of two-way communication that is capable of communicating with and signaling to a person or service that can respond appropriately at all times.

EXEMPTION: Inclined stairway chairlifts and inclined and vertical wheelchair lifts in private residences are not required to be equipped with key switches.

(6) Beginning July 1, 2004, vertical wheelchair lifts in commercial installations must be equipped with low energy power-operated doors or gates complying with ANSI/BHMA A156.19. Doors and gates shall remain open for twenty seconds minimum. End doors shall be thirty-two inches minimum clear width. Side doors shall be forty-two inches minimum clear width.

EXCEPTION: Lifts having doors or gates on opposite sides shall be permitted to have manual doors and gates.

(7) For purposes of this section, "not visible at all times" includes, but is not limited to, conveyances located in stairwells, auditoriums, and other areas which are not generally in the normal path of travel during the hours that the building is occupied.

[Statutory Authority: RCW 70.87.020, 70.87.030, 70.87.034, 70.87.120, 70.87.185, 70.87.190, 2002 c 98, 2003 c 143 and 2004 c 66. 04-12-047, § 296-96-02370, filed 5/28/04, effective 6/30/04.]

WAC 296-96-02371 Are private residence inclined stairway chairlifts required to be permanently wired? No. Private residence inclined stairway chairlifts are not required to be permanently wired into a structure. These conveyances may be equipped with a cord and plug. The plug must be directly inserted into a wall receptacle that is protected by a fuse or a circuit breaker at its source and is capable of supporting the additional load on the circuit. The source must be identified either at the receptacle or at the feeder panel. The cord must be secured in a manner that will not create any tripping hazards.

[Statutory Authority: RCW 70.87.020, 70.87.030, 70.87.034, 70.87.120, 70.87.185, 70.87.190, 2002 c 98, 2003 c 143 and 2004 c 66. 04-12-047, § 296-96-02371, filed 5/28/04, effective 6/30/04.]

PART C1 - MINIMUM STANDARDS FOR ALL MATERIAL LIFTS

WAC 296-96-05010 What are the department's rules on material lifts? (1) These rules define a "material lift" as a fixed stationary conveyance that:

(a) Has a car or platform moving in guides;

(b) Serves two or more floors of a building or structure;

(c) Has a vertical rise of at least 5 feet and no more than 60 feet;

(d) Has a maximum speed of 50 feet per minute;

(e) Is not part of a conveying system but is an isolated self-contained lift;

(f) Travels only in an inclined or vertical direction;

(g) Is operated or supervised by an individual designated by the employer;

(h) Is installed in a commercial or industrial area not accessible to the general public; and

(i) May not be operated from within the car.

(2) Material lifts must not carry people so their operation or failure will not endanger people working near them. WAC 296-96-05010 through 296-96-05290 establishes requirements for the construction, installation, and operation of material lifts. These rules allow certain conveyances designed solely to transport material and equipment to be constructed to less stringent and costly standards than ASME A17.1.

These rules do not apply to conveyances that lack a car (platform) and use rollers, belts, tracks, power conveyors, or similar carrying (loading) surfaces. (See ASME/ANSI B20.1.)

[Statutory Authority: RCW 70.87.020, 70.87.030, 70.87.034, 70.87.120, 70.87.185, 70.87.190, 2002 c 98, 2003 c 143 and 2004 c 66. 04-12-047, § 296-96-05010, filed 5/28/04, effective 6/30/04. Statutory Authority: RCW 70.87.020, 70.87.030, 70.87.034, 70.87.120, 70.87.185 and chapter 70.87 RCW. 01-02-026, § 296-96-05010, filed 12/22/00, effective 1/22/01.]

WAC 296-96-05020 What requirements apply to the construction and fire safety of hoistway enclosures? Generally, local codes and ordinances govern hoistway enclosure construction. When not in conflict with a local code requirement, the enclosure must:

(1) Be built to a height of 7 feet above each floor, landing and adjacent stairway tread;

(2) Extend (adjacent to the counterweights) the full height of the floor and 8 inches beyond the counterweight raceway;

(3) Be constructed of either solid material or material with openings that will reject a 2-inch diameter ball; and

(4) Be supported and braced so that it does not deflect more than 1 inch when subjected to a force of 100 pounds applied perpendicular at any point.

[Statutory Authority: RCW 70.87.020, 70.87.030, 70.87.034, 70.87.120, 70.87.185 and chapter 70.87 RCW. 01-02-026, § 296-96-05020, filed 12/22/00, effective 1/22/01.]

WAC 296-96-05030 What are the construction requirements for hoistway enclosure gates and doors? Enclosure gates (doors) must be constructed according to the following standards:

(1) The gate must guard the full width of each opening on every landing.

(2) It must be built in one of the following styles:

(a) Vertically sliding;

(b) Biparting;

(c) Counter-balanced;

(d) Horizontally swinging; or

(e) Horizontally sliding.

(3) Be constructed of either solid material or material with openings that will reject a 2-inch diameter ball.

(4) Be constructed with a distance of not more than 2 1/2 inches between a hoistway gate or hoistway door face and a landing sill edge.

(5) Be designed and guided to withstand (without being broken, permanently deformed, or displaced from its guides or tracks) a 100 pound lateral pressure applied near its center.

(6) Be equipped with labeled and listed electrical interlock(s) that prevents the operation of the lift when the doors or gates are open.

(7) Be constructed with balanced type vertically sliding gates that extend no more than 2 inches vertically from the landing threshold and no less than 66 inches above it.

[Statutory Authority: RCW 70.87.020, 70.87.030, 70.87.034, 70.87.120, 70.87.185, 70.87.190, 2002 c 98, 2003 c 143 and 2004 c 66. 04-12-047, § 296-96-05030, filed 5/28/04, effective 6/30/04. Statutory Authority: RCW 70.87.020, 70.87.030, 70.87.034, 70.87.120, 70.87.185 and chapter 70.87 RCW. 01-02-026, § 296-96-05030, filed 12/22/00, effective 1/22/01.]

WAC 296-96-05040 What requirements apply to a hoistway that does not extend to the lowest levels of a building or structure? If the space directly below the hoistway is accessible, the following requirements apply:

(1) All lift counterweights must have safeties.

(2) All cars and counterweights must have either spring or oil buffers.

(3) Spring buffers must not fully compress when struck by a car carrying its rated load or by the counterweights when they are moving at the following speeds:

(a) For safeties operated by a governor, the tripping speed of the governor is the maximum striking speed.

(b) For safeties not operated by a governor, 125 percent of the rated speed is the maximum striking speed.

(4) Car and counterweight-buffer supports must be able to withstand any impact upon the buffer (without permanent deformation) while occurring at the following speeds:

(a) For safeties operated by a governor, the tripping speed of the governor at the rated capacity is the maximum impact speed.

(b) For safeties not operated by a governor, 125 percent of the rated speed is the maximum impact speed.

[Statutory Authority: RCW 70.87.020, 70.87.030, 70.87.034, 70.87.120, 70.87.185 and chapter 70.87 RCW. 01-02-026, § 296-96-05040, filed 12/22/00, effective 1/22/01.]

WAC 296-96-05050 What requirements apply to lift hoist driving machines? (1) Lift hoist driving machines must be one of the following types:

(a) Winding drum.

(b) Traction.

(c) Direct plunger.

(d) Hydraulic.

(e) Roped or chained hydraulic.

(f) Rack and pinion.

(g) Roller chain drive.

(h) Scissors.

(i) Screw.

(2) Overhead mounted driving machines must either be secured to the top of overhead beams or supported by the floor above. Hooks, cables, chains or similar devices cannot suspend driving machines.

(3) For traction machines, the diameter of drive sheaves cannot be less than 30 times the diameter of the hoisting cables. The diameters of all other sheaves cannot be less than 21 times this diameter.

[Statutory Authority: RCW 70.87.020, 70.87.030, 70.87.034, 70.87.120, 70.87.185 and chapter 70.87 RCW. 01-02-026, § 296-96-05050, filed 12/22/00, effective 1/22/01.]

WAC 296-96-05070 What car enclosure requirements apply to lifts? Lift cars must have their sides enclosed with solid panels or openwork that will reject a 2-inch diameter ball. On the car sides where there is no gate (door), the enclosure must extend to a height of at least 48 inches from the floor or to a height necessary to enclose the materials that are being moved. On the car side next to the counterweight runway, the enclosure must extend vertically to the car top or underside of the car crosshead and horizontally to at least 6 inches on each side of the runway. Material lifts in unenclosed hoistways must have a car gate that is constructed of the same material as the car enclosure. The gate must be the same height as the sidewalls of the car enclosure and must be provided with a latching device.

[Statutory Authority: RCW 70.87.020, 70.87.030, 70.87.034, 70.87.120, 70.87.185, 70.87.190, 2002 c 98, 2003 c 143 and 2004 c 66. 04-12-047, §

296-96-05070, filed 5/28/04, effective 6/30/04. Statutory Authority: RCW 70.87.020, 70.87.030, 70.87.034, 70.87.120, 70.87.185 and chapter 70.87 RCW. 01-02-026, § 296-96-05070, filed 12/22/00, effective 1/22/01.]

WAC 296-96-05080 How much running clearance is permitted between a car sill and a hoistway? Running clearance between a car sill and a hoistway must not exceed 2 inches.

[Statutory Authority: RCW 70.87.020, 70.87.030, 70.87.034, 70.87.120, 70.87.185 and chapter 70.87 RCW. 01-02-026, § 296-96-05080, filed 12/22/00, effective 1/22/01.]

WAC 296-96-05090 What requirements apply to car and counterweight guides? Car and counterweight guide rails must be fastened so they will not deflect more than 1/8 inch. They must also be strong enough to withstand, without deformation, the application of a car safety when the car is carrying its rated load and traveling at its rated speed.

[Statutory Authority: RCW 70.87.020, 70.87.030, 70.87.034, 70.87.120, 70.87.185 and chapter 70.87 RCW. 01-02-026, § 296-96-05090, filed 12/22/00, effective 1/22/01.]

WAC 296-96-05100 How much weight can be placed on a car frame and platform during loading and unloading? Car frames and platforms must be designed and constructed per manufacturers' specifications to withstand the impact of the maximum weight encountered during loading and unloading.

[Statutory Authority: RCW 70.87.020, 70.87.030, 70.87.034, 70.87.120, 70.87.185 and chapter 70.87 RCW. 01-02-026, § 296-96-05100, filed 12/22/00, effective 1/22/01.]

WAC 296-96-05120 What requirements apply to car operating devices, terminal stopping devices and electrical protective devices? If electrically operated, such devices must be enclosed. On lifts driven by winding drum machines, there must be a slack rope device employing an enclosed electric switch (manually reset type) which halts power to the drum and brake when the hoisting rope becomes slack.

[Statutory Authority: RCW 70.87.020, 70.87.030, 70.87.034, 70.87.120, 70.87.185 and chapter 70.87 RCW. 01-02-026, § 296-96-05120, filed 12/22/00, effective 1/22/01.]

WAC 296-96-05140 What requirements apply to car safeties? Car safeties must be used on all material lifts that are suspended by wire ropes or chains. They must be able to stop and sustain a car carrying 125 percent of its rated load. On lifts driven by rack and pinion machines:

(1) Car safeties will consist of a freely rotating safety pinion, an overspeed governor and a safety device which may be mounted on the car.

(2) The rotating pinion driving an overspeed governor will travel on a stationary rack which is vertically mounted in the hoistway.

(3) The governor will actuate the safety device when the downward speed of the car reaches the tripping speed and will bring the car to a gradual stop.

[Statutory Authority: RCW 70.87.020, 70.87.030, 70.87.034, 70.87.120, 70.87.185 and chapter 70.87 RCW. 01-02-026, § 296-96-05140, filed 12/22/00, effective 1/22/01.]

WAC 296-96-05150 What requirements apply to lift brakes? On electric lifts, brakes must engage by springs and must release electronically. All brakes must have the ability to stop a car and hold it at rest while the car is carrying 125 percent of its rated load. At least one brake must be mounted on the load side of the driving machine's worm shaft. On indirectly driven lifts, brakes must engage when the driving mechanism fails.

[Statutory Authority: RCW 70.87.020, 70.87.030, 70.87.034, 70.87.120, 70.87.185 and chapter 70.87 RCW. 01-02-026, § 296-96-05150, filed 12/22/00, effective 1/22/01.]

WAC 296-96-05160 What types of ropes, chains, and rope connections must be used on a lift? (1) The following general requirements apply:

(a) Iron (low carbon steel) or steel wire ropes with fiber cores must be used to suspend cars and counterweights.

(b) The minimum safety factor for suspension ropes must be 6 times the manufacturers rated breaking strength per rope.

(c) The car, the counterweight end of the car and the counterweight wire ropes (or the stationary hitch ends where multiple roping is used) must be fastened so that the looped ends of the turned back portion in the rope sockets are clearly visible. Fastenings must either be:

(i) Individual tapered, babbitted rope sockets; or

(ii) Other types of department approved rope fastenings.

(d) Rope sockets must develop at least 80 percent of the breaking strength of the strongest rope used in the sockets.

(e) U-bolt rope clips (clamps) cannot be used for load fastenings.

(f) A metal or plastic data tag must be securely attached to one of the wire rope fastenings each time the ropes are replaced or reshackled. The data tag must include:

(i) The diameter of the ropes in inches; and

(ii) The manufacturer's rated breaking strength.

(iii) All replacements of wire rope or chain must be in accordance with the lift manufacturer's specifications.

(2) The following requirements apply to specific types of material lifts:

(a) Traction type lifts must use at least three hoisting ropes.

(b) Lifts suspended by hoisting chains must comply with the chain manufacturer's specifications for maintenance, inspection, and application.

(c) Lifts using roller chain type lifting chains must use chains with a six to one safety factor based on ASME/ANSI B-29.1M minimum (not average) chain strength.

(d) Drum type lifts, must use either at least two hoisting ropes or a secondary as well as a primary load path to the hoist must be employed. Also, the cable secured to the drum must be at least one and one-half turns around the drum when the carrier is at its extreme limit of travel.

[Statutory Authority: RCW 70.87.020, 70.87.030, 70.87.034, 70.87.120, 70.87.185, 70.87.190, 2002 c 98, 2003 c 143 and 2004 c 66. 04-12-047, § 296-96-05160, filed 5/28/04, effective 6/30/04. Statutory Authority: RCW 70.87.020, 70.87.030, 70.87.034, 70.87.120, 70.87.185 and chapter 70.87 RCW. 01-02-026, § 296-96-05160, filed 12/22/00, effective 1/22/01.]

WAC 296-96-05170 What requirements apply to lift control stations? Lift control stations must be located at each landing out of reach but within sight of the car. They

must have controls that are permanently and clearly labeled by function. The controls must have a stop switch that will halt electrical power to the driving machine and brake. This stop switch must:

(1) Be manually operated;

(2) Have red operating handles or buttons;

(3) Be conspicuously and permanently marked "STOP"; and

(4) Clearly indicate the stop and run position.

[Statutory Authority: RCW 70.87.020, 70.87.030, 70.87.034, 70.87.120, 70.87.185, 70.87.190, 2002 c 98, 2003 c 143 and 2004 c 66. 04-12-047, § 296-96-05170, filed 5/28/04, effective 6/30/04. Statutory Authority: RCW 70.87.020, 70.87.030, 70.87.034, 70.87.120, 70.87.185 and chapter 70.87 RCW. 01-02-026, § 296-96-05170, filed 12/22/00, effective 1/22/01.]

WAC 296-96-05190 How must lift pits be constructed? Lift pits must:

(1) Have noncombustible floors;

(2) Be designed to prevent the entry of ground water into the pit;

(3) Have floors that are substantially level;

(4) Have drains that are not directly connected to sewers;

(5) Provide safe and convenient access to the pit;

(6) Provide an approved ladder for pits deeper than 3 feet; and

(7) Have non-perforated metal guards installed on the open sides of the counterweights where spring, solid or oil type buffers are attached. These guards must:

(a) Extend from a point not more than 12 inches above the pit floor to a point at least 7 feet but not more than 8 feet above the floor;

(b) Be fastened to a properly reinforced and braced metal frame which will be at least equal in strength and stiffness to No. 14 U.S. gauge sheet steel; and

(c) Be omitted on the pit side where compensating chains or ropes are attached to the counterweight.

[Statutory Authority: RCW 70.87.020, 70.87.030, 70.87.034, 70.87.120, 70.87.185 and chapter 70.87 RCW. 01-02-026, § 296-96-05190, filed 12/22/00, effective 1/22/01.]

WAC 296-96-05200 Which lift landings must be illuminated? All lift landings must be illuminated.

[Statutory Authority: RCW 70.87.020, 70.87.030, 70.87.034, 70.87.120, 70.87.185 and chapter 70.87 RCW. 01-02-026, § 296-96-05200, filed 12/22/00, effective 1/22/01.]

WAC 296-96-05210 What signs must be posted on landings and lifts? Each lift must have the following two signs:

(1) A "CAPACITY" sign permanently fastened in the lift car and on each landing. This sign must indicate the rated load of the lift in pounds and be made of metal with 2-inch high black letters on a yellow background.

(2) A "NO RIDERS" sign conspicuously and permanently fastened on the landing side of all hoistway gates (doors) and in the enclosure of each car. This sign must be made of metal with 2-inch high black letters on a red background.

[Statutory Authority: RCW 70.87.020, 70.87.030, 70.87.034, 70.87.120, 70.87.185 and chapter 70.87 RCW. 01-02-026, § 296-96-05210, filed 12/22/00, effective 1/22/01.]

WAC 296-96-05220 What electrical wiring standards apply to lifts? All electrical wiring, installations, and equipment in a hoistway, machine room or machinery space must conform to the National Electrical Code in effect at the time of installation or major alteration.

[Statutory Authority: RCW 70.87.020, 70.87.030, 70.87.034, 70.87.120, 70.87.185 and chapter 70.87 RCW. 01-02-026, § 296-96-05220, filed 12/22/00, effective 1/22/01.]

WAC 296-96-05230 What safety regulations apply to exposed equipment? All exposed gears, sprockets, sheaves, drums, ropes and chains must be guarded to protect against accidental contact as required General safety and health standards adopted according to chapter 49.17 RCW.

[Statutory Authority: RCW 70.87.020, 70.87.030, 70.87.034, 70.87.120, 70.87.185, 70.87.190, 2002 c 98, 2003 c 143 and 2004 c 66. 04-12-047, § 296-96-05230, filed 5/28/04, effective 6/30/04. Statutory Authority: RCW 70.87.020, 70.87.030, 70.87.034, 70.87.120, 70.87.185 and chapter 70.87 RCW. 01-02-026, § 296-96-05230, filed 12/22/00, effective 1/22/01.]

WAC 296-96-05240 What are the minimum maintenance requirements for lifts? All owners, or designated owner representatives, of material lifts described in this chapter are responsible for the maintenance of their lifts and parts. Minimum maintenance requirements are:

(1) All lifts described in this chapter and their parts must be maintained in a safe condition; and

(2) All devices and safeguards that are required by this chapter must be maintained in good working order.

[Statutory Authority: RCW 70.87.020, 70.87.030, 70.87.034, 70.87.120, 70.87.185 and chapter 70.87 RCW. 01-02-026, § 296-96-05240, filed 12/22/00, effective 1/22/01.]

WAC 296-96-05260 When are inspections required? Inspections are required for each lift installation, alteration or relocation and must be conducted at the completion of the job before the lift is placed into service. The inspection must include a safety test at 125 percent of rated load.

[Statutory Authority: RCW 70.87.020, 70.87.030, 70.87.034, 70.87.120, 70.87.185 and chapter 70.87 RCW. 01-02-026, § 296-96-05260, filed 12/22/00, effective 1/22/01.]

WAC 296-96-05290 Under what conditions is a five-year test administered? A five-year test of the material lift car and counterweight safety devices must be conducted, and the test must be administered under the following conditions:

(1) Qualified people will conduct the test. A qualified person is either:

(a) An elevator mechanic licensed in the appropriate category for the conveyance being tested;

(b) The representative of a firm that manufactured the particular material lift, and who holds a current temporary mechanic's license in this state;

(c) The representative of a firm that manufactured the particular material lift who is working under the direct supervision of an elevator mechanic licensed in the appropriate category for the conveyance being tested.

(2) The car safety devices must be tested while the car is carrying a 100 percent rated load and the counterweight is at no load.

(3) A report of the test results must be submitted to the department for approval.

[Statutory Authority: RCW 70.87.020, 70.87.030, 70.87.034, 70.87.120, 70.87.185, 70.87.190, 2002 c 98, 2003 c 143 and 2004 c 66. 04-12-047, § 296-96-05290, filed 5/28/04, effective 6/30/04. Statutory Authority: RCW 70.87.020, 70.87.030, 70.87.034, 70.87.120, 70.87.185 and chapter 70.87 RCW. 01-02-026, § 296-96-05290, filed 12/22/00, effective 1/22/01.]

PART C2 - CONSTRUCTION, OPERATION, MAINTENANCE AND INSPECTION OF INCLINED PRIVATE RESIDENCE ELEVATOR FOR TRANSPORTING PERSON(S) FOR RESIDENTIAL USE

WAC 296-96-07010 What is the scope of Part C-2? The rules in this part are the minimum standard for all new inclined private residence elevators for single family use. The purpose of this part is to provide for the safety of all persons riding in or operating an inclined private residence elevator to ensure that no person in proximity of the elevator will be endangered by its operation or failure.

[Statutory Authority: RCW 70.87.020, 70.87.030, 70.87.034, 70.87.120, 70.87.185, 70.87.190, 2002 c 98, 2003 c 143 and 2004 c 66. 04-12-047, § 296-96-07010, filed 5/28/04, effective 6/30/04. Statutory Authority: RCW 70.87.020, 70.87.030, 70.87.034, 70.87.120, 70.87.185 and chapter 70.87 RCW. 01-02-026, § 296-96-07010, filed 12/22/00, effective 1/22/01.]

WAC 296-96-07020 What is the definition for inclined private residence elevator? "Inclined private residence elevator" means a device constructed and operated for transporting people or property from one elevation to another at an angle of inclination of seventy degrees or less from the horizontal. Essentially, it is a car or platform traveling on guides or guiding members in an inclined plane.

NOTE: For purposes of this chapter, devices installed indoors on stairways that utilize chairs to carry passengers are not considered "inclined passenger elevators."

[Statutory Authority: RCW 70.87.020, 70.87.030, 70.87.034, 70.87.120, 70.87.185 and chapter 70.87 RCW. 01-02-026, § 296-96-07020, filed 12/22/00, effective 1/22/01.]

WAC 296-96-07021 What are the requirements for existing inclined private residence elevators? Inclined private residence elevators must comply with the rules adopted by the department that were in effect at the time the elevator was permitted, regardless of whether the rule(s) has been repealed, unless any new rule specifically states that it applies to all conveyances, regardless of when the conveyance was permitted. Copies of previous rules adopted by the department are available upon request.

If the department determines that an inclined private residence elevator was installed without a permit and/or without an inspection the conveyance will be required to comply with the current rules adopted by the department unless you are able to provide documentation determining the date the conveyance was installed (e.g., sales receipts, building permits, or other appropriate documentation).

[Statutory Authority: RCW 70.87.020, 70.87.030, 70.87.034, 70.87.120, 70.87.185, 70.87.190, 2002 c 98, 2003 c 143 and 2004 c 66. 04-12-047, § 296-96-07021, filed 5/28/04, effective 6/30/04.]

WAC 296-96-07024 What rules apply to alterations of inclined private residence elevators? If the inclined private residence elevator is altered only the component(s) that was altered must comply with the applicable rules adopted by the department in effect at the time the conveyance was altered. If the department determines that an elevator was altered without a permit and inspection, the conveyance will be required to comply with the applicable rules adopted by the department at the time the noncompliant alteration was identified.

[Statutory Authority: RCW 70.87.020, 70.87.030, 70.87.034, 70.87.120, 70.87.185, 70.87.190, 2002 c 98, 2003 c 143 and 2004 c 66. 04-12-047, § 296-96-07024, filed 5/28/04, effective 6/30/04.]

WAC 296-96-07030 Does the department approve private residence elevator plans and specifications? Yes. (1) Before commencing construction of any inclined private residence elevator the owner must submit complete plans and specifications to the department for approval.

(2) Plans and specifications covering the installation of an inclined private residence elevator must be endorsed by a professional engineer before the department will approve the plans.

[Statutory Authority: RCW 70.87.020, 70.87.030, 70.87.034, 70.87.120, 70.87.185 and chapter 70.87 RCW. 01-02-026, § 296-96-07030, filed 12/22/00, effective 1/22/01.]

WAC 296-96-07035 What are the minimum maintenance requirements for inclined private residence elevators? Owners of inclined private residence elevator are responsible for the following:

(1) Maintaining elevators and mechanical parts in a safe condition; and

(2) Ensuring that all devices and safeguards required by these regulations are maintained in good working order.

[Statutory Authority: RCW 70.87.020, 70.87.030, 70.87.034, 70.87.120, 70.87.185 and chapter 70.87 RCW. 01-02-026, § 296-96-07035, filed 12/22/00, effective 1/22/01.]

WAC 296-96-07040 What are the clearance requirements for an incline runway? (1) If the car sides extend less than 6 feet above the floor of the car, there must be no obstruction along the runway within 24 inches of the car sides. EXCEPTION: When solid guards are installed on the obstruction in both directions of travel which project at least 14 inches in line with the direction of travel, the running clearance may be reduced to 7 inches. The guard must be arched and the edges rounded to eliminate shear hazard.

(2) Guiding members and moving parts of the inclined private residence elevator must be kept free of brush and other types of material that might either impede the travel or cause deterioration of the equipment over time.

[Statutory Authority: RCW 70.87.020, 70.87.030, 70.87.034, 70.87.120, 70.87.185 and chapter 70.87 RCW. 01-02-026, § 296-96-07040, filed 12/22/00, effective 1/22/01.]

WAC 296-96-07050 What are the construction requirements for car landing enclosures and gates for inclined private residence elevators? Any landing enclosures and gates must have:

(1) A railing at least 42 inches high to protect all landing platforms and those areas of a building used as landing platforms; and

(2) A gate whose height is equal to the height of the railing to protect the passenger landing opening.

(a) Gates may either be a horizontally sliding type or a swing type; and

(b) All gates must be equipped with a latch that holds the gate closed and an electrical contact to prevent movement of the car when a gate is open.

[Statutory Authority: RCW 70.87.020, 70.87.030, 70.87.034, 70.87.120, 70.87.185 and chapter 70.87 RCW. 01-02-026, § 296-96-07050, filed 12/22/00, effective 1/22/01.]

WAC 296-96-07060 What types of bumpers and buffers must be installed on inclined private residence elevators? (1) If spring or equivalent type buffers are not being used and rated speeds do not exceed 50 feet per minute, solid bumpers must be installed. Solid bumpers must:

(a) Be built of wood or other suitable resilient material;

(b) Have the ability to resist deterioration from weather;

(c) Have sufficient strength to withstand, without failure, the impact of a descending car carrying its rated load or counterweight and traveling at 115 percent of its rated speed.

(2) Spring type buffers must be installed when speeds exceed 50 feet per minute. Spring buffers must:

(a) Be built with a minimum stroke of 3/4 inch and with a maximum stroke of 1 1/2 inches;

(b) Not fully compress when struck by a car carrying its rated load or counterweight and traveling at 115 percent of its rated speed.

(3) Inclined private residence elevators are not required to have bumpers and buffers except when obstructions are encountered.

[Statutory Authority: RCW 70.87.020, 70.87.030, 70.87.034, 70.87.120, 70.87.185 and chapter 70.87 RCW. 01-02-026, § 296-96-07060, filed 12/22/00, effective 1/22/01.]

WAC 296-96-07070 What are the requirements for machinery beams and supports? (1) All machinery and sheaves must be sufficiently secured and supported to prevent any part from becoming loose or displaced. Beams directly supporting machinery must be made of steel, sound timber or reinforced concrete.

(2) Beams and support loads must be computed as follows:

(a) The total load on the beams must be equal to the weight of all apparatus resting on the beams plus twice the maximum load suspended from the beams.

(b) The load resting on the beams must include the complete weights of the driving machine, sheaves, controller, etc.

(c) The load suspended from the beams must include the sum of the tensions in all ropes suspended from the beams.

(3) The elevator driving machine or sheaves must not be fastened to the underside of the supporting beams at the top of the hoistway. EXCEPTION: Cast iron in tension must not be used for supporting members for idler and deflecting sheaves where hung beneath beams.

(4) The factor of safety for beams and supports must be no less than:

(a) Five for steel; and

(b) Six for timber and reinforced concrete.

[Statutory Authority: RCW 70.87.020, 70.87.030, 70.87.034, 70.87.120, 70.87.185 and chapter 70.87 RCW. 01-02-026, § 296-96-07070, filed 12/22/00, effective 1/22/01.]

WAC 296-96-07080 What are the load and size requirements for car platforms? The minimum rated load shall be not less than the following:

(1) For net platform areas up to and including twelve square feet, the rated load shall be not less than forty pounds per square foot or three hundred fifty pounds whichever is greater.

(2) For net platform areas greater than twelve square feet, the rated load shall be based upon sixty-two and one-half pounds per square foot.

[Statutory Authority: RCW 70.87.020, 70.87.030, 70.87.034, 70.87.120, 70.87.185, 70.87.190, 2002 c 98, 2003 c 143 and 2004 c 66. 04-12-047, § 296-96-07080, filed 5/28/04, effective 6/30/04. Statutory Authority: RCW 70.87.020, 70.87.030, 70.87.034, 70.87.120, 70.87.185 and chapter 70.87 RCW. 01-02-026, § 296-96-07080, filed 12/22/00, effective 1/22/01.]

WAC 296-96-07090 What is the maximum rated speed of an incline elevator? The maximum rated speed of an incline elevator, measured along the incline, is 75 feet per minute.

[Statutory Authority: RCW 70.87.020, 70.87.030, 70.87.034, 70.87.120, 70.87.185 and chapter 70.87 RCW. 01-02-026, § 296-96-07090, filed 12/22/00, effective 1/22/01.]

WAC 296-96-07100 What construction requirements apply to inclined private residence elevators? (1) All of the components associated with inclined private residence elevators must be built to a minimum safety factor of five, unless otherwise specified in this part.

(2) Inclined private residence elevator car frames and platforms must:

(a) Be built of metal, a combination of metal and wood or other materials of equal strength;

(b) Be suitably prepared and/or protected for exposure to weather.

(3) Incline car chassis must:

(a) Be built of metal, except for the guiding members, and

(b) Chassis guiding members must be retained and/or enclosed in guides so that the chassis cannot be derailed.

(4) Cast iron may not be used in the construction of a car frame or chassis.

(5) A car may have only one compartment.

[Statutory Authority: RCW 70.87.020, 70.87.030, 70.87.034, 70.87.120, 70.87.185, 70.87.190, 2002 c 98, 2003 c 143 and 2004 c 66. 04-12-047, § 296-96-07100, filed 5/28/04, effective 6/30/04. Statutory Authority: RCW 70.87.020, 70.87.030, 70.87.034, 70.87.120, 70.87.185 and chapter 70.87 RCW. 01-02-026, § 296-96-07100, filed 12/22/00, effective 1/22/01.]

WAC 296-96-07110 What construction requirements apply to car enclosures? Car enclosures must be:

(1) Enclosed on all sides, except at the entrance, to a height of at least 42 inches;

(2) Enclosed with a type of material that will reject a 1 1/2 inch diameter ball;

(3) Securely fastened to the car platform so that it cannot become loose or displaced due to ordinary service, application of the car safety, or car contact with a buffer.

(4) Built to withstand a 75 pound pressure, horizontally applied at any point on the wall, without causing a wall deflection that reduces running clearance below 3/4 inch or above 1 inch.

[Statutory Authority: RCW 70.87.020, 70.87.030, 70.87.034, 70.87.120, 70.87.185 and chapter 70.87 RCW. 01-02-026, § 296-96-07110, filed 12/22/00, effective 1/22/01.]

WAC 296-96-07120 What construction requirements apply to car doors and gates? (1) All car entrances must be protected by a door or gate. The height of the door or gate must be at least 42 inches and equal to the height of the car enclosure. Doors and gates may be either of a solid design or an openwork design. If of an openwork design, the door or gate must be able to reject a 3-inch diameter ball.

(2) Car doors or gates must be equipped with an electric contact that prevents the elevator from operating unless the door or gate is securely closed. If the gate is a swing type opening outward from the car, the electric contact must not be made until the gate is securely latched.

(3) All car doors or gates must be manually operated.

[Statutory Authority: RCW 70.87.020, 70.87.030, 70.87.034, 70.87.120, 70.87.185 and chapter 70.87 RCW. 01-02-026, § 296-96-07120, filed 12/22/00, effective 1/22/01.]

WAC 296-96-07130 What type of glass or plastic can be used in a car enclosure? Weather resistant plastic and tempered safety glass may be used in car enclosures.

[Statutory Authority: RCW 70.87.020, 70.87.030, 70.87.034, 70.87.120, 70.87.185 and chapter 70.87 RCW. 01-02-026, § 296-96-07130, filed 12/22/00, effective 1/22/01.]

WAC 296-96-07140 Are capacity and data plates required? (1) The manufacturer must install a weather resistant capacity plate. It must be securely fastened to the car in a conspicuous place and state the car's rated load in pounds using letters at least 1/4 inch high.

(2) The manufacturer must install a metal data plate showing the car's weight, speed, suspension means data, manufacturer's name and date of installation. The data plate must be securely fastened in a conspicuous place in the machine area.

[Statutory Authority: RCW 70.87.020, 70.87.030, 70.87.034, 70.87.120, 70.87.185 and chapter 70.87 RCW. 01-02-026, § 296-96-07140, filed 12/22/00, effective 1/22/01.]

WAC 296-96-07150 What are the construction requirements for guide rails, track supports and fastenings? (1) Guides, guide rails, guide rail brackets, splice plates, and fastenings must be made of steel or other metals conforming to the requirements of this section.

(2) Guides, guide rails, guide rail brackets, and their fastenings and supports must, at the point of support, deflect 1/8 inch or less while resisting horizontal forces encountered during loading. When horizontal force is measured at a midpoint between brackets, guide rails must deflect 1/4 inch or less in any direction.

(3) The top and bottom of each guide or guide rail run must not allow a car and counterweight guiding members to travel beyond the guide rail ends.

(4) Guides for inclined private residence elevators must have no more stresses and deflection than allowed by the manufacturer's specifications.

[Statutory Authority: RCW 70.87.020, 70.87.030, 70.87.034, 70.87.120, 70.87.185 and chapter 70.87 RCW. 01-02-026, § 296-96-07150, filed 12/22/00, effective 1/22/01.]

WAC 296-96-07160 What construction requirements apply to counterweights? (1) Counterweights, where used, must be in a guide or guiding members.

(2) Counterweights must not be of sufficient weight to cause undue slackening of any car hoisting rope or chain during acceleration or retardation of the car. Counterweight weight section must be mounted in structural or formed metal frames which are designed to retain weights securely in place.

EXCEPTION: Counterweights may be constructed of a single metal plate.

[Statutory Authority: RCW 70.87.020, 70.87.030, 70.87.034, 70.87.120, 70.87.185 and chapter 70.87 RCW. 01-02-026, § 296-96-07160, filed 12/22/00, effective 1/22/01.]

WAC 296-96-07170 What are the requirements of safeties and governors? (1) All inclined private residence elevators must be equipped with a safety capable of stopping and sustaining a car carrying its rated load.

(a) Elevator safeties must be type "A" or "B" or other devices approved by the department and must be operated by a speed governor.

(b) Elevator safeties must operate independently of governor speed action and without delay when a hoist rope breaks.

(2) Governors shall operate to set the safety at a maximum of 140 percent of rated speed. Upon slackening of the hoist ropes the safety shall set without appreciable delay and independently of the speed governor. The governor shall be located where:

(a) If over-travel occurs, the governor will not be struck by the car or counterweight;

(b) All parts can freely and fully move;

(c) The governor is accessible for a complete examination;

(d) Governors are required to be of the mechanical type; and

(e) Belt driven governors must be monitored. In the case of belt breakage or disengagement, the car must be shut down.

(3) If ropes are used, the ropes must be made of iron, steel, Monel metal or phosphor bronze and be at least 1/4 inch in diameter. Tiller rope construction must not be used.

(4) Motor-control circuits and brake-control circuits must be opened either before the safety applies or at the time the safety applies.

(5) All safeties must apply mechanically. Electrically operated safeties must not be used.

(6) All winding drum type inclined elevators that use rope suspensions must be equipped with a manually reset slack-rope device. During a car's descent, if the travel of the car is obstructed and the hoisting ropes go slack, the slack-rope device must stop power to the elevator motor and brake

(7) Cast iron must not be used to build any elevator safety part that stops and sustains the elevator.

[Statutory Authority: RCW 70.87.020, 70.87.030, 70.87.034, 70.87.120, 70.87.185, 70.87.190, 2002 c 98, 2003 c 143 and 2004 c 66. 04-12-047, § 296-96-07170, filed 5/28/04, effective 6/30/04. Statutory Authority: RCW 70.87.020, 70.87.030, 70.87.034, 70.87.120, 70.87.185 and chapter 70.87 RCW. 01-02-026, § 296-96-07170, filed 12/22/00, effective 1/22/01.]

WAC 296-96-07171 How and when are safeties and governors tested? (1) A safety must be tested before the inclined private residence elevator is put into service. It must be tested while the elevator is carrying its rated load.

(2) Governors on instantaneous type safeties must be tested by hand tripping the governor while the elevator is traveling at its rated speed. Creating sufficient slack in the rope and dropping the elevator is the method of testing speed governors located on a elevator or chassis.

[Statutory Authority: RCW 70.87.020, 70.87.030, 70.87.034, 70.87.120, 70.87.185 and chapter 70.87 RCW. 01-02-026, § 296-96-07171, filed 12/22/00, effective 1/22/01.]

WAC 296-96-07180 What are the construction requirements for driving machines and sheaves? (1)(a) Winding drums, traction sheaves, overhead sheaves and deflecting sheaves must:

(i) Be made of cast iron or steel;

(ii) Have diameters at least 30 times the diameter of the wire hoisting ropes; and

(iii) Have machined rope grooves.

(b) EXCEPTION:

(i) If 8 x 19 steel ropes are used, drum and sheave diameters may be reduced to 21 times the diameter of the hoisting rope.

(ii) Existing incline lifts suspended by cables are not required to have machine grooves, except for the first row of cables wrapped on the drum and shall be required to have a tracking device.

(iii) On existing inclined lifts suspended by cables that do not have machine grooves on the drum, the first layer of ropes will be recognized as providing the same traction as grooves, provided that this layer remains on the drum at all times and is not allowed to wind out. Such lifts must be provided with a tracking device to ensure that the rope does not wind over itself on the drum.

(2) The factor of safety, based on the static load (the rated load plus the weight of the car, ropes, counterweights, etc.) to be used in the design of driving machines and sheaves, must be at least:

(a) Eight for driving machines and sheaves built of wrought iron and steel; or

(b) Ten for driving machines built of cast iron, cast steel or other materials.

(3) Set screw type fastenings must not be substituted for keys or pins if connections are subject to torque or tension.

(4) Gears:

(a) When connecting drums or sheaves to the main driving gear, friction gears, clutch mechanisms or couplings must not be used.

(b) Worm gears having cast iron teeth must not be used.

(5) Brakes:

(a) Electric brakes must be of the friction type set by springs and must release electrically.

(b) All brakes must be able to stop and hold a elevator carrying 125 percent of its rated load.

(c) At least one brake must be mounted so that in the case of gearbox failure, the drum will hold the rated load.

(d) If a single ground or short-circuit, a counter-voltage or a motor field discharge occurs and the operating device is set in the stop position, the brake magnet must set the brake.

(6) Driving machines:

(a) A driving machine may be mounted on a elevator chassis or in a remote location. However, if mounted in a remote location, all sheaves and sprockets must be guarded and positioned so the hoisting ropes and chains remain properly aligned while the elevator is in use.

(b) Screw type machines must not be used.

(c) Hydraulic driving machines must conform to ASME A17.1.

(d) Roped-hydraulic machines may be used.

[Statutory Authority: RCW 70.87.020, 70.87.030, 70.87.034, 70.87.120, 70.87.185, 70.87.190, 2002 c 98, 2003 c 143 and 2004 c 66. 04-12-047, § 296-96-07180, filed 5/28/04, effective 6/30/04. Statutory Authority: RCW 70.87.020, 70.87.030, 70.87.034, 70.87.120, 70.87.185 and chapter 70.87 RCW. 01-02-026, § 296-96-07180, filed 12/22/00, effective 1/22/01.]

WAC 296-96-07190 What construction requirements apply to terminal stopping switches? A hoistway must be equipped with normal upper and lower terminal stopping switches that are activated by a elevator chassis. Normal upper and lower terminal stopping switches must stop the elevator at the normal top and bottom terminals of travel.

(1) A hoistway must be equipped with final terminal stopping switches that are activated by a elevator chassis. These switches must stop the elevator if the elevator travels beyond the normal terminals and prevent the elevator from moving in either direction.

(2) Winding drum machines may use a slack cable switch instead of a bottom final terminal switch.

(3) Normal and final terminal stopping switches must not control the same switches on the controller unless at least two separate and independent switches are used. At least two of these separate switches must be closed in order to complete the motor and brake circuits for each direction of travel.

[Statutory Authority: RCW 70.87.020, 70.87.030, 70.87.034, 70.87.120, 70.87.185, 70.87.190, 2002 c 98, 2003 c 143 and 2004 c 66. 04-12-047, § 296-96-07190, filed 5/28/04, effective 6/30/04. Statutory Authority: RCW 70.87.020, 70.87.030, 70.87.034, 70.87.120, 70.87.185 and chapter 70.87 RCW. 01-02-026, § 296-96-07190, filed 12/22/00, effective 1/22/01.]

WAC 296-96-07200 What are the requirements for operation of an inclined private residence elevator? (1) If the activation of the elevator is by key switch or key pad it must conform to the requirements of (a) and (b) of this subsection. The department may approve alternative methods of equal security such as key card or magnetic swipe card. Methods must conform to the following:

(a) The key or code must be entered each time to move the elevator.

(b) Key-operated switches must be of the spring return type and must be operated by a weatherproof cylinder type lock having not less than five pin or five disc combination with the key removable only when the switch is in the off position.

(2) If activation of the elevator is provided by a timing circuit that only allows the circuits to be initiated or unlocked for a sufficient amount of time to allow passengers to board the elevator and begin transit, a separate activation switch on the car is not required. The operating circuits must automatically relock:

(a) If the elevator is not activated within its preset period of time;

(b) When any landing stop button is activated;

(c) When the preset timing period has expired and the car has completed transit to another landing or returns to the departure landing.

(3) Emergency stop switches must be provided on or adjacent to the operating station.

(a) Stop switches in the car must:

(i) Be of a manually opened and manually closed type;

(ii) Have red handles or buttons and be conspicuously marked "STOP";

(iii) Open even if springs fail when springs are used.

(b) Stop switch at other operating stations:

(i) May be of a momentary type;

(ii) Must have red handles or buttons and be conspicuously marked "stop";

(iii) Must open even if springs fail when springs are used;

(iv) After initiation of stopping, the car may not automatically restart. Run condition must be manually initiated.

(4) Design and installation of control and operating circuits must meet the following:

(a) Control systems based upon the completion or maintenance of an electric circuit must not be used for interrupting power and applying machine brakes at terminals; stopping elevators when an emergency stop switch is open or when any electrical protective device operates; stopping a machine when the safety applies.

(b) If springs are used to activate switches, contact, or circuit breaking relays to stop the elevator at a terminal, the springs must be of the restrained compression type.

(5) Hand rope operation must not be used.

(6) Radio controls may be used in lieu of wiring for all car controls provided:

(a) The system is set up so that it is fail safe (if contact is lost, the unit will stop);

(b) In such installations, the stop button in the car shall interrupt the circuit of frequency; and

(c) The controls are permanently mounted and conform to code.

[Statutory Authority: RCW 70.87.020, 70.87.030, 70.87.034, 70.87.120, 70.87.185, 70.87.190, 2002 c 98, 2003 c 143 and 2004 c 66. 04-12-047, § 296-96-07200, filed 5/28/04, effective 6/30/04. Statutory Authority: RCW 70.87.020, 70.87.030, 70.87.034, 70.87.120, 70.87.185 and chapter 70.87 RCW. 01-02-026, § 296-96-07200, filed 12/22/00, effective 1/22/01.]

WAC 296-96-07210 What are the construction requirements for suspension methods? (1) When a chassis is suspended from a driving machine by a wire rope, a single method of suspension may be used. The suspension means may be any one of the following:

(a) Steel elevator wire rope;

(b) Steel aircraft cable; or

(c) Roller chain conforming to ANSI transmission roller chains and sprocket teeth.

(2) Steel tapes must not be used as a suspension method.

(3) The minimum diameter of hoist ropes or cables must be 1/4 inch for elevator wire rope and 3/16 inch for galvanized aircraft cable.

(4) Factor of safety:

(a) The minimum factor of safety for a suspension method is 8 based upon the rope tension while elevating a car carrying its rated load.

(b) In no case, must the rated breaking strength of the rope be less than 4,000 pounds.

(5) The contact arc of a wire rope on a traction sheave must be sufficient to produce adequate traction under all load conditions.

(6) All wire ropes anchored to a winding drum must have at least one full turn of rope on the drum when the car or counterweight reaches its over-travel limit.

(7) The winding-drum ends of car and counterweight wire ropes must be secured by:

(a) Clamps on the inside of the drum; or

(b) Return loop; or

(c) Properly made individual tapered babbitted sockets; or

(d) Properly attached fittings recommended by wire rope manufacturers.

(e) U-bolt type clamps must not be used.

(8) The ends of wire ropes must be fastened to cars or counterweights by:

(a) Return loop; or

(b) Properly made individual tapered babbitted sockets that conform to ASME A17.1 requirements. (The diameter of the hole in the small end of the socket must not exceed the nominal diameter of the rope by more than 3/32 inch.); or properly attached fittings recommended by wire rope manufacturers.

(c) U-bolt type clamps must not be used.

(9) Rope repair:

(a) Car and counterweight wire ropes cannot be lengthened or repaired by splicing.

(b) If a single wire rope in a set is worn or damaged and needs to be replaced, the entire set must be replaced.

[Statutory Authority: RCW 70.87.020, 70.87.030, 70.87.034, 70.87.120, 70.87.185 and chapter 70.87 RCW. 01-02-026, § 296-96-07210, filed 12/22/00, effective 1/22/01.]

WAC 296-96-07215 What are the requirements for controllers? All controllers must be labeled and listed. In addition, controller covers must be locked.

[Statutory Authority: RCW 70.87.020, 70.87.030, 70.87.034, 70.87.120, 70.87.185, 70.87.190, 2002 c 98, 2003 c 143 and 2004 c 66. 04-12-047, § 296-96-07215, filed 5/28/04, effective 6/30/04.]

WAC 296-96-07220 What are the requirements for traveling cables? (1) All traveling cables must conform to the National Electrical Code (NEC) in effect at the time of installation or major alteration.

(2) Where circuits through the traveling cable(s) exceed 30 volts, a means must be provided to stop the power automatically if the traveling cables part.

[Statutory Authority: RCW 70.87.020, 70.87.030, 70.87.034, 70.87.120, 70.87.185 and chapter 70.87 RCW. 01-02-026, § 296-96-07220, filed 12/22/00, effective 1/22/01.]

WAC 296-96-07230 What requirements apply to electrical wiring? (1) All wiring must conform to the National Electrical Code (NEC) in effect at the time of installation or major alteration.

(2) If a driving machine is mounted on the elevator chassis, the electrical connections between the elevator and the power source must be able to stop power if a traveling cable parts.

(3) All electrical connections between the elevator and the stationary connections must be insulated flexible conductors conforming to the applicable articles in the NEC relating to Elevators, Dumbwaiters, Escalators, Moving Walks, Wheelchair Lifts, and Stairway Chair Lifts.

[Statutory Authority: RCW 70.87.020, 70.87.030, 70.87.034, 70.87.120, 70.87.185, 70.87.190, 2002 c 98, 2003 c 143 and 2004 c 66. 04-12-047, § 296-96-07230, filed 5/28/04, effective 6/30/04. Statutory Authority: RCW 70.87.020, 70.87.030, 70.87.034, 70.87.120, 70.87.185 and chapter 70.87 RCW. 01-02-026, § 296-96-07230, filed 12/22/00, effective 1/22/01.]

WAC 296-96-07240 What are the requirements for track supporting structures? All supporting structures must meet the local building codes.

[Statutory Authority: RCW 70.87.020, 70.87.030, 70.87.034, 70.87.120, 70.87.185 and chapter 70.87 RCW. 01-02-026, § 296-96-07240, filed 12/22/00, effective 1/22/01.]

WAC 296-96-07250 What additional requirements apply to inclined private residence elevators? (1) All inclined private residence elevators must be equipped with:

(a) A Manual method of moving the elevator in accordance with ASME A17.1; and

(b) A machine brake with a lever to release the brake allowing use of the manual method.

(2) Machinery spaces must be protected from weather and accidental contact. Machinery spaces must be locked.

(3) Guiding members and moving parts of the inclined private residence elevator must be free of brush and other types of material that might either impede the travel or cause deterioration of the equipment over time.

[Statutory Authority: RCW 70.87.020, 70.87.030, 70.87.034, 70.87.120, 70.87.185, 70.87.190, 2002 c 98, 2003 c 143 and 2004 c 66. 04-12-047, § 296-96-07250, filed 5/28/04, effective 6/30/04. Statutory Authority: RCW 70.87.020, 70.87.030, 70.87.034, 70.87.120, 70.87.185 and chapter 70.87 RCW. 01-02-026, § 296-96-07250, filed 12/22/00, effective 1/22/01.]

PART C3 - CONSTRUCTION, OPERATION, MAINTENANCE AND INSPECTION OF PRIVATE RESIDENCE CONVEYANCES FOR TRANSPORTING PROPERTY FOR RESIDENTIAL USE

WAC 296-96-08010 What is the scope of Part C-3? The rules in this section are the minimum standard for all new and existing inclined private residence conveyances for transporting property for single family use in a private residence. The purpose of this section is to ensure that inclined private residence conveyances will be used only for transporting materials and goods, not people, and that no person in proximity of the conveyance will be endangered by its operation or failure.

[Statutory Authority: RCW 70.87.020, 70.87.030, 70.87.034, 70.87.120, 70.87.185, 70.87.190, 2002 c 98, 2003 c 143 and 2004 c 66. 04-12-047, § 296-96-08010, filed 5/28/04, effective 6/30/04. Statutory Authority: RCW 70.87.020, 70.87.030, 70.87.034, 70.87.120, 70.87.185 and chapter 70.87 RCW. 01-02-026, § 296-96-08010, filed 12/22/00, effective 1/22/01.]

WAC 296-96-08020 What is the definition for inclined private residence conveyances for transporting property? "Inclined private residence conveyances for transporting property" means a device constructed and operated for transporting property from one elevation to another at an angle of inclination of 70 degrees or less from the horizontal. Essentially, it is a car or platform traveling on guides or guiding members in an inclined plane.

[Statutory Authority: RCW 70.87.020, 70.87.030, 70.87.034, 70.87.120, 70.87.185, 70.87.190, 2002 c 98, 2003 c 143 and 2004 c 66. 04-12-047, § 296-96-08020, filed 5/28/04, effective 6/30/04. Statutory Authority: RCW 70.87.020, 70.87.030, 70.87.034, 70.87.120, 70.87.185 and chapter 70.87 RCW. 01-02-026, § 296-96-08020, filed 12/22/00, effective 1/22/01.]

WAC 296-96-08022 What are the requirements for existing inclined private residence conveyances for transporting property? Inclined private residence conveyances for transporting property must comply with the rules adopted by the department that were in effect at the time the conveyance was permitted, regardless of whether the rule(s) has been repealed, unless any new rule specifically states that it applies to all conveyances, regardless of when the conveyance was permitted. Copies of previous rules adopted by the department are available upon request.

If the department determines that an inclined private residence conveyance for transporting property was installed without a permit and inspection the conveyance will be required to comply with the current rules adopted by the department unless you are able to provide documentation determining the date the conveyance was installed (e.g., sales receipts, building permits, or other appropriate documentation).

[Statutory Authority: RCW 70.87.020, 70.87.030, 70.87.034, 70.87.120, 70.87.185, 70.87.190, 2002 c 98, 2003 c 143 and 2004 c 66. 04-12-047, § 296-96-08022, filed 5/28/04, effective 6/30/04.]

WAC 296-96-08024 What rules apply to alterations of inclined private residence conveyances for transporting property? If the inclined private residence conveyance for transporting property is altered only the component(s) that was altered must comply with the applicable rules adopted by the department in effect at the time the conveyance was altered.

If the department determines that a conveyance was altered without a permit and inspection, the conveyance will be required to comply with the applicable rules adopted by the department at the time the noncompliant alteration was identified.

[Statutory Authority: RCW 70.87.020, 70.87.030, 70.87.034, 70.87.120, 70.87.185, 70.87.190, 2002 c 98, 2003 c 143 and 2004 c 66. 04-12-047, § 296-96-08024, filed 5/28/04, effective 6/30/04.]

WAC 296-96-08030 Does the department approve elevators plans and specifications for inclined private residence conveyances for transporting property? Yes. (1) Before commencing construction of any inclined private residence elevator for transporting property the owner must submit complete plans and specifications to the department for approval.

(2) Plans and specifications covering the installation of an inclined private residence conveyance for transporting

property must be endorsed by a professional engineer before the department will approve the plans.

[Statutory Authority: RCW 70.87.020, 70.87.030, 70.87.034, 70.87.120, 70.87.185, 70.87.190, 2002 c 98, 2003 c 143 and 2004 c 66. 04-12-047, § 296-96-08030, filed 5/28/04, effective 6/30/04. Statutory Authority: RCW 70.87.020, 70.87.030, 70.87.034, 70.87.120, 70.87.185 and chapter 70.87 RCW. 01-02-026, § 296-96-08030, filed 12/22/00, effective 1/22/01.]

WAC 296-96-08035 What are the minimum maintenance requirements for inclined private residence elevators for transporting property? Owners of inclined private residence elevators for transporting property are responsible for ensuring that:

(1) Elevators and their parts are maintained in a safe condition; and

(2) All devices and safeguards required by these regulations are maintained in good working order.

[Statutory Authority: RCW 70.87.020, 70.87.030, 70.87.034, 70.87.120, 70.87.185 and chapter 70.87 RCW. 01-02-026, § 296-96-08035, filed 12/22/00, effective 1/22/01.]

WAC 296-96-08050 What are the construction requirements for inclined private residence conveyances for transporting property for cars, landing gates, and enclosures? (1) Any landing enclosure must have a railing at least 42 inches high to protect all landing platforms and those areas of a building used as landing platforms.

(2) Where gates are not provided at the entrance to the platform, a chain with a sign must be provided to block the landing entrance. The sign must state "Keep off landing until elevator has stopped at platform."

(3) If gates are provided, they must be:

(a) Either a horizontally sliding type or a swing type; and

(b) Equipped with a latch that holds the gate closed and an electrical contact to prevent movement of the elevator when a gate is open.

[Statutory Authority: RCW 70.87.020, 70.87.030, 70.87.034, 70.87.120, 70.87.185, 70.87.190, 2002 c 98, 2003 c 143 and 2004 c 66. 04-12-047, § 296-96-08050, filed 5/28/04, effective 6/30/04. Statutory Authority: RCW 70.87.020, 70.87.030, 70.87.034, 70.87.120, 70.87.185 and chapter 70.87 RCW. 01-02-026, § 296-96-08050, filed 12/22/00, effective 1/22/01.]

WAC 296-96-08060 What types of bumpers and buffers must be installed on inclined private residence conveyances for transporting property? Solid bumpers or spring type buffers may be used. (1) Solid bumpers must:

(a) Be built of wood or other suitable resilient material;

(b) Have the ability to resist deterioration from weather; and

(c) Have sufficient strength to withstand, without failure, the impact of a descending conveyance carrying its rated load or counterweight and traveling at 115 percent of its rated speed.

(2) Spring type buffers, if used, must:

(a) Be built with a minimum stroke of 3/4 inch and with a maximum stroke of 1 1/2 inches; and

(b) Not fully compress when struck by the conveyance carrying its rated load or counterweight and traveling at 115 percent of its rated speed.

(3) Inclined private residence conveyances for transporting property are not required to have bumpers and buffers except when obstructions are encountered.

[Statutory Authority: RCW 70.87.020, 70.87.030, 70.87.034, 70.87.120, 70.87.185, 70.87.190, 2002 c 98, 2003 c 143 and 2004 c 66. 04-12-047, § 296-96-08060, filed 5/28/04, effective 6/30/04. Statutory Authority: RCW 70.87.020, 70.87.030, 70.87.034, 70.87.120, 70.87.185 and chapter 70.87 RCW. 01-02-026, § 296-96-08060, filed 12/22/00, effective 1/22/01.]

WAC 296-96-08070 What are the requirements for machinery beams and supports? (1) All machinery and sheaves must be sufficiently secured and supported to prevent any part from becoming loose or displaced. Beams directly supporting machinery must be made of steel, sound timber or reinforced concrete.

(2) Beams and support loads must be computed as follows:

(a) The total load on the beams must be equal to the weight of all apparatus resting on the beams plus twice the maximum load suspended from the beams.

(b) The load resting on the beams must include the complete weights of the driving machine, sheaves, controller, etc.

(c) The load suspended from the beams must include the sum of the tensions in all ropes suspended from the beams.

(3) The elevator driving machine or sheaves shall not be fastened to the underside of the supporting beams at the top of the hoistway. EXCEPTION: Cast iron in tension must not be used for supporting members for idler and deflecting sheaves where they are hung beneath beams.

(4) The factor of safety for beams and supports must be no less than:

(a) Five for steel; or

(b) Six for timber and reinforced concrete.

[Statutory Authority: RCW 70.87.020, 70.87.030, 70.87.034, 70.87.120, 70.87.185 and chapter 70.87 RCW. 01-02-026, § 296-96-08070, filed 12/22/00, effective 1/22/01.]

WAC 296-96-08080 What are the load and size requirements for car platforms? (1) The rated load of a platform must not exceed 5,000 pounds.

(2) The rated load of the platform must be no less than the load to be carried and must not exceed 50 pounds per square foot of inside net platform area.

[Statutory Authority: RCW 70.87.020, 70.87.030, 70.87.034, 70.87.120, 70.87.185 and chapter 70.87 RCW. 01-02-026, § 296-96-08080, filed 12/22/00, effective 1/22/01.]

WAC 296-96-08090 What is the maximum rated speed of an inclined conveyance? The maximum rated speed of an inclined conveyance, measured along the incline, is 75 feet per minute.

[Statutory Authority: RCW 70.87.020, 70.87.030, 70.87.034, 70.87.120, 70.87.185, 70.87.190, 2002 c 98, 2003 c 143 and 2004 c 66. 04-12-047, § 296-96-08090, filed 5/28/04, effective 6/30/04. Statutory Authority: RCW 70.87.020, 70.87.030, 70.87.034, 70.87.120, 70.87.185 and chapter 70.87 RCW. 01-02-026, § 296-96-08090, filed 12/22/00, effective 1/22/01.]

WAC 296-96-08100 What requirements apply to inclined conveyance? (1) Inclined conveyance elevator frames and platforms must:

(a) Be built of metal, a combination of metal and wood or other materials of equal strength;

(b) Have a safety factor of at least 5; and

(c) Be suitably prepared and/or protected from exposure to weather.

(2) Inclined conveyance chassis must:

(a) Be built of metal, except for the guiding members;

(b) Have a safety factor of at least 5, based upon the conveyance's rated load; and

(c) Have the chassis guiding members retained and/or enclosed in guides so that the chassis cannot be derailed.

(3) Cast iron may not be used in the construction of the conveyance frame or chassis.

(4) A car may have only one compartment.

[Statutory Authority: RCW 70.87.020, 70.87.030, 70.87.034, 70.87.120, 70.87.185, 70.87.190, 2002 c 98, 2003 c 143 and 2004 c 66. 04-12-047, § 296-96-08100, filed 5/28/04, effective 6/30/04. Statutory Authority: RCW 70.87.020, 70.87.030, 70.87.034, 70.87.120, 70.87.185 and chapter 70.87 RCW. 01-02-026, § 296-96-08100, filed 12/22/00, effective 1/22/01.]

WAC 296-96-08110 What requirements apply to car enclosures? (1) Car enclosures are not required; however, if provided, the car enclosure must be:

(a) Securely fastened to the car platform so that it cannot become loose or displaced due to ordinary service, application of the conveyance safety, or from the conveyance coming into contact with the buffer.

(b) Built to withstand a 75 pound pressure, horizontally applied at any point on the wall, without causing a wall deflection that reduces running clearance below 3/4 inch or above 1 inch.

(2) If glass or plastic is used in the car enclosure, it must be weather resistant plastic or tempered safety glass.

(3) Where there is no car enclosure, a means must be provided to secure all materials to the platform.

[Statutory Authority: RCW 70.87.020, 70.87.030, 70.87.034, 70.87.120, 70.87.185, 70.87.190, 2002 c 98, 2003 c 143 and 2004 c 66. 04-12-047, § 296-96-08110, filed 5/28/04, effective 6/30/04. Statutory Authority: RCW 70.87.020, 70.87.030, 70.87.034, 70.87.120, 70.87.185 and chapter 70.87 RCW. 01-02-026, § 296-96-08110, filed 12/22/00, effective 1/22/01.]

WAC 296-96-08140 Are capacity and data plates required on inclined private residence conveyances for transporting property? (1) The manufacturer must install a weather resistant capacity plate. It must be securely fastened to the conveyance in a conspicuous place and state the conveyance's rated load in pounds using letters at least 1/4 inch high.

(2) The manufacturer must install a metal data plate showing the conveyance's weight, speed, suspension means data, manufacturer's name and date of installation. The data plate must be securely fastened in a conspicuous place in the machine area.

[Statutory Authority: RCW 70.87.020, 70.87.030, 70.87.034, 70.87.120, 70.87.185, 70.87.190, 2002 c 98, 2003 c 143 and 2004 c 66. 04-12-047, § 296-96-08140, filed 5/28/04, effective 6/30/04. Statutory Authority: RCW 70.87.020, 70.87.030, 70.87.034, 70.87.120, 70.87.185 and chapter 70.87 RCW. 01-02-026, § 296-96-08140, filed 12/22/00, effective 1/22/01.]

WAC 296-96-08150 What are the requirements for guide rails, track supports and fastenings? (1) Guides, guide rails, guide rail brackets, splice plates, and fastenings must be made of steel or other metals conforming to the requirements of this section.

(2) Guides, guide rails, guide rail brackets, and their fastenings and supports must, at the point of support, deflect 1/8 inch or less while resisting horizontal forces encountered during loading. When horizontal force is measured at a midpoint between brackets, guide rails must deflect 1/4 inch or less in any direction.

(3) The top and bottom of each guide or guide rail run must not allow the conveyance and counterweight guiding members to travel beyond the guide rail ends.

(4) Guides for inclined private residence conveyances must have no more stresses and deflection than allowed by the manufacturer's specifications.

[Statutory Authority: RCW 70.87.020, 70.87.030, 70.87.034, 70.87.120, 70.87.185, 70.87.190, 2002 c 98, 2003 c 143 and 2004 c 66. 04-12-047, § 296-96-08150, filed 5/28/04, effective 6/30/04. Statutory Authority: RCW 70.87.020, 70.87.030, 70.87.034, 70.87.120, 70.87.185 and chapter 70.87 RCW. 01-02-026, § 296-96-08150, filed 12/22/00, effective 1/22/01.]

WAC 296-96-08160 What requirements apply to counterweights? (1) Counterweights, where used, must be in a guide or track.

(2) Counterweights must not be of sufficient weight to cause undue slackening of any conveyance hoisting rope or chain during acceleration or retardation of the conveyance. Counterweight weight section must be mounted in structural or formed metal frames which are designed to retain weights securely in place.

EXCEPTION: Counterweights may be constructed of a single metal plate.

[Statutory Authority: RCW 70.87.020, 70.87.030, 70.87.034, 70.87.120, 70.87.185, 70.87.190, 2002 c 98, 2003 c 143 and 2004 c 66. 04-12-047, § 296-96-08160, filed 5/28/04, effective 6/30/04. Statutory Authority: RCW 70.87.020, 70.87.030, 70.87.034, 70.87.120, 70.87.185 and chapter 70.87 RCW. 01-02-026, § 296-96-08160, filed 12/22/00, effective 1/22/01.]

WAC 296-96-08170 What are the requirements of safeties and governors? (1) All inclined private residence conveyances for transporting property must have a slack cable safety device capable of stopping and sustaining a car carrying its rated load.

(2) Other types of approved safety devices may be used. If so, such devices must meet the requirements of WAC 296-96-07170.

[Statutory Authority: RCW 70.87.020, 70.87.030, 70.87.034, 70.87.120, 70.87.185, 70.87.190, 2002 c 98, 2003 c 143 and 2004 c 66. 04-12-047, § 296-96-08170, filed 5/28/04, effective 6/30/04. Statutory Authority: RCW 70.87.020, 70.87.030, 70.87.034, 70.87.120, 70.87.185 and chapter 70.87 RCW. 01-02-026, § 296-96-08170, filed 12/22/00, effective 1/22/01.]

WAC 296-96-08175 How and when are conveyance safeties tested? The safeties must be tested before the inclined private residence conveyances for transporting property is put into service. Safeties must be tested while the conveyance is carrying its rated load.

[Statutory Authority: RCW 70.87.020, 70.87.030, 70.87.034, 70.87.120, 70.87.185, 70.87.190, 2002 c 98, 2003 c 143 and 2004 c 66. 04-12-047, § 296-96-08175, filed 5/28/04, effective 6/30/04. Statutory Authority: RCW 70.87.020, 70.87.030, 70.87.034, 70.87.120, 70.87.185 and chapter 70.87 RCW. 01-02-026, § 296-96-08175, filed 12/22/00, effective 1/22/01.]

WAC 296-96-08180 What are the requirements for driving machines and sheaves? (1) All new winding drums, traction sheaves, overhead sheaves and deflecting sheaves must:

(a) Be made of cast iron or steel;

(b) Have diameters at least 30 times the diameter of the wire hoisting ropes. EXCEPTION: If 8 x 19 steel ropes are used, drum and sheave diameters may be reduced to 21 times the diameter of the hoisting rope; and

(c) Have machined rope grooves.

(2) The factor of safety, based on the static load (the rated load plus the weight of the car, ropes, counterweights, etc.) to be used in the design of driving machines and sheaves, must be at least 5.

(3) Set screw type fastenings must not be substituted for keys or pins if connections are subject to torque or tension.

(4) Gears:

(a) When connecting drums or sheaves to the main driving gear, friction gears, clutch mechanisms or couplings must not be used.

(b) Worm gears having cast iron teeth must not be used.

(5) Brakes:

(a) Electric brakes must be of the friction type set by springs and must release electrically.

(b) All brakes must be able to stop and hold a car carrying 125 percent of its rated load.

(c) At least one brake must be mounted on the load side of the driving machine's worm shaft. On indirectly driven lifts, brakes must engage when the driving machine fails.

(d) If a single ground or short-circuit, a counter-voltage or a motor field discharge occurs and the operating device is set in the stop position, the brake magnet must set the brake.

(6) Driving machines:

(a) A driving machine may be mounted on a conveyance chassis or in a remote location. However, if mounted in a remote location, all sheaves and sprockets must be guarded and positioned so the hoisting ropes and chains remain properly aligned while the conveyance is in use.

(b) Screw type machines must not be used.

(c) Hydraulic driving machines must conform to ASME A17.1.

(d) Roped-hydraulic machines may be used.

(e) Rack and pinion drive may be used.

EXCEPTION: Existing inclined private residence conveyances for transporting property may use wrapped cable drums as long as they do not show signs of excessive wear.

[Statutory Authority: RCW 70.87.020, 70.87.030, 70.87.034, 70.87.120, 70.87.185, 70.87.190, 2002 c 98, 2003 c 143 and 2004 c 66. 04-12-047, § 296-96-08180, filed 5/28/04, effective 6/30/04. Statutory Authority: RCW 70.87.020, 70.87.030, 70.87.034, 70.87.120, 70.87.185 and chapter 70.87 RCW. 01-02-026, § 296-96-08180, filed 12/22/00, effective 1/22/01.]

WAC 296-96-08190 What requirements apply to terminal stopping switches? A hoistway must be equipped with normal upper and lower terminal stopping switches that are activated by the conveyance chassis. These switches must stop the conveyance at the normal top and bottom terminals of travel.

(1) Winding drum machines may use a slack cable switch as a bottom final terminal switch.

(2) Normal and final terminal stopping switches must not control the same switches on the controller unless at least two separate and independent switches are used. At least two of these separate switches must be closed in order to complete the motor and brake circuits for each direction of travel.

[Statutory Authority: RCW 70.87.020, 70.87.030, 70.87.034, 70.87.120, 70.87.185, 70.87.190, 2002 c 98, 2003 c 143 and 2004 c 66. 04-12-047, § 296-96-08190, filed 5/28/04, effective 6/30/04. Statutory Authority: RCW 70.87.020, 70.87.030, 70.87.034, 70.87.120, 70.87.185 and chapter 70.87 RCW. 01-02-026, § 296-96-08190, filed 12/22/00, effective 1/22/01.]

WAC 296-96-08200 What are the requirements for the activation and operation of an inclined private residence conveyances for transporting property? (1) If activation of the conveyance is by key switch, key pad or swipe card, the activation and operation must conform to the requirements of (a) and (b) of this subsection. The department may approve alternative methods of equal security.

(a) The key or code must be entered each time to move the conveyance.

(b) Key-operated switches must be of the spring return type and must be operated by a weatherproof cylinder type lock having not less than five pin or five disc combination with the key removable only when the switch is in the off position.

(2) If activation is provided by a timing circuit that only permits the circuits to be initiated or unlocked for a sufficient amount of time to allow the loading of materials, the operating circuits must automatically relock:

(a) If the conveyance is not activated within its preset period of time;

(b) When any landing stop button is activated; or

(c) When the car has completed transit to another landing or returns to the departure landing.

(3) Emergency stop switches must be provided on or adjacent to the operating station. Stop switches:

(a) May be of a momentary type;

(b) Must have red handles or buttons and be conspicuously marked "STOP"; and

(c) Must open even if springs fail when springs are used.

(4) After initiation of stopping, the car may not automatically restart. Run condition must be manually initiated.

(5) Design and installation of control and operating circuits must meet the following:

(a) Control systems based upon the completion or maintenance of an electric circuit must not be used for interrupting power and applying machine brakes at terminals, stopping elevators when an emergency stop switch is open or when any electrical protective device operates, or for stopping a machine when the safety applies.

(b) If springs are used to activate switches, contact, or circuit breaking relays to stop the elevator at a terminal, the springs must be a restrained compression type.

(6) Hand rope operation must not be used.

(7) Radio controls may be used in lieu of wiring for all car controls provided:

(a) The system is set up so that it is fail safe (if radio contact is lost, the unit will stop);

(b) In such installations, the stop button in the car shall interrupt the circuit of frequency; and

(c) The controls are permanently mounted and comply with the applicable rules.

[Statutory Authority: RCW 70.87.020, 70.87.030, 70.87.034, 70.87.120, 70.87.185, 70.87.190, 2002 c 98, 2003 c 143 and 2004 c 66. 04-12-047, § 296-96-08200, filed 5/28/04, effective 6/30/04. Statutory Authority: RCW 70.87.020, 70.87.030, 70.87.034, 70.87.120, 70.87.185 and chapter 70.87 RCW. 01-02-026, § 296-96-08200, filed 12/22/00, effective 1/22/01.]

WAC 296-96-08210 What are the requirements for suspension methods? (1) When a chassis is suspended from a driving machine by a wire rope, a single method of suspension may be used. The suspension means may be any one of the following:

(a) Steel elevator wire rope;

(b) Steel aircraft cable; or

(c) Roller chain conforming to ANSI transmission roller chains and sprocket teeth.

(2) Steel tapes must not be used as a suspension method.

(3) The minimum diameter of hoist ropes or cables must be 3/8 inch for elevator wire rope and 3/16 inch for galvanized aircraft cable.

(4) Factor of safety:

(a) The minimum factor of safety for a suspension method is 5 based upon the rope tension while elevating the elevator carrying its rated load.

(b) In no case, must the rated breaking strength of the rope be less than 4,000 pounds.

(5) The contact arc of a wire rope on a traction sheave must be sufficient to produce adequate traction under all load conditions.

(6) All wire ropes anchored to a winding drum must have at least one full turn of rope on the drum when the car or counterweight reaches its over-travel limit.

(7) The winding-drum ends of car and counterweight wire ropes must be secured by:

(a) Clamps on the inside of the drum;

(b) Return loop;

(c) Properly made individual tapered babbitted sockets; or

(d) Properly attached fittings recommended by wire rope manufacturers. U-bolt type clamps must not be used.

(8) The ends of wire ropes must be fastened to cars or counterweights by:

(a) Return loop;

(b) Properly made individual tapered babbitted sockets that conform to ASME A17.1 requirements (The diameter of the hole in the small end of the socket must not exceed the nominal diameter of the rope by more than 3/32 inch.); or

(c) Properly attached fittings recommended by wire rope manufacturers. U-bolt type clamps must not be used.

(9) Rope repair:

(a) Car and counterweight wire ropes cannot be lengthened or repaired by splicing.

(b) If a single wire rope in a set is worn or damaged and needs to be replaced, the entire set must be replaced.

(10) A metal or plastic data tag must be securely attached to one of the wire rope fastenings each time the ropes are replaced or reshackled. The data tag must include:

(a) The diameter of the ropes in inches; and

(b) The manufacturer's rated breaking strength.

[Statutory Authority: RCW 70.87.020, 70.87.030, 70.87.034, 70.87.120, 70.87.185 and chapter 70.87 RCW. 01-02-026, § 296-96-08210, filed 12/22/00, effective 1/22/01.]

WAC 296-96-08215 What are the requirements for controllers? All controllers must be labeled and listed. In addition, controller covers must be locked.

[Statutory Authority: RCW 70.87.020, 70.87.030, 70.87.034, 70.87.120, 70.87.185, 70.87.190, 2002 c 98, 2003 c 143 and 2004 c 66. 04-12-047, § 296-96-08215, filed 5/28/04, effective 6/30/04.]

WAC 296-96-08220 What are the requirements for traveling cables? (1) All traveling cables must conform to the NEC in effect at the time of installation or major alteration.

(2) Where circuits through the traveling cable(s) exceed 30 volts, a means must be provided to stop the power automatically if the traveling cables part.

[Statutory Authority: RCW 70.87.020, 70.87.030, 70.87.034, 70.87.120, 70.87.185, 70.87.190, 2002 c 98, 2003 c 143 and 2004 c 66. 04-12-047, § 296-96-08220, filed 5/28/04, effective 6/30/04. Statutory Authority: RCW 70.87.020, 70.87.030, 70.87.034, 70.87.120, 70.87.185 and chapter 70.87 RCW. 01-02-026, § 296-96-08220, filed 12/22/00, effective 1/22/01.]

WAC 296-96-08230 What requirements apply to electrical wiring? (1) All wiring must conform to the NEC in effect at the time of installation or major alteration.

(2) If a driving machine is mounted on the conveyance chassis, the electrical connections between the conveyance and the power source must be able to stop power if a traveling cable parts.

(3) All electrical connections between the conveyance chassis and the stationary connections must be insulated flexible conductors conforming to the applicable articles of the NEC relating to Elevators, Dumbwaiters, Escalators, Moving Walks, Wheelchair Lifts, and Stairway Chair Lifts.

[Statutory Authority: RCW 70.87.020, 70.87.030, 70.87.034, 70.87.120, 70.87.185, 70.87.190, 2002 c 98, 2003 c 143 and 2004 c 66. 04-12-047, § 296-96-08230, filed 5/28/04, effective 6/30/04. Statutory Authority: RCW 70.87.020, 70.87.030, 70.87.034, 70.87.120, 70.87.185 and chapter 70.87 RCW. 01-02-026, § 296-96-08230, filed 12/22/00, effective 1/22/01.]

WAC 296-96-08240 What are the requirements for track supporting structures? All supporting structures must meet the local building codes.

[Statutory Authority: RCW 70.87.020, 70.87.030, 70.87.034, 70.87.120, 70.87.185 and chapter 70.87 RCW. 01-02-026, § 296-96-08240, filed 12/22/00, effective 1/22/01.]

WAC 296-96-08250 What additional requirements apply to inclined private residence conveyances for transporting property? (1) All inclined private residence conveyances for transporting property must be equipped with:

(a) A manual method capable of moving the conveyance in accordance with ASME A17.1; and

(b) A machine brake with a lever to release the brake allowing use of the manual method.

(2) Machinery spaces must be protected from weather and accidental contact. Machinery space must be locked.

(3) Metal signs stating "NO RIDERS" in two-inch letters must be conspicuously posted and permanently attached to the conveyance and at each landing.

[Statutory Authority: RCW 70.87.020, 70.87.030, 70.87.034, 70.87.120, 70.87.185, 70.87.190, 2002 c 98, 2003 c 143 and 2004 c 66. 04-12-047, § 296-96-08250, filed 5/28/04, effective 6/30/04. Statutory Authority: RCW 70.87.020, 70.87.030, 70.87.034, 70.87.120, 70.87.185 and chapter 70.87 RCW. 01-02-026, § 296-96-08250, filed 12/22/00, effective 1/22/01.]

PART C4 - TEMPORARY HOISTS

Personnel Hoists

WAC 296-96-09001 What regulations apply to personnel hoists? All personnel hoists installed must comply with the American National Standard Institute ANSI A10.4-1990 edition or the latest published edition adopted by ANSI, Safety Requirements for Personnel Hoists and Employee Elevators for Construction and Demolition Operations.

[Statutory Authority: RCW 70.87.020, 70.87.030, 70.87.034, 70.87.120, 70.87.185 and chapter 70.87 RCW. 01-02-026, § 296-96-09001, filed 12/22/00, effective 1/22/01.]

WAC 296-96-09002 May a drop plate be used for temporary hoists? Drop plates for temporary hoists may be allowed provided that they are permanently attached to the elevator and the elevator may not operate unless the drop plate is retracted.

[Statutory Authority: RCW 70.87.020, 70.87.030, 70.87.034, 70.87.120, 70.87.185, 70.87.190, 2002 c 98, 2003 c 143 and 2004 c 66. 04-12-047, § 296-96-09002, filed 5/28/04, effective 6/30/04. Statutory Authority: RCW 70.87.020, 70.87.030, 70.87.034, 70.87.120, 70.87.185 and chapter 70.87 RCW. 01-02-026, § 296-96-09002, filed 12/22/00, effective 1/22/01.]

WAC 296-96-09003 What are the requirements for landing gates? Landing gates must be provided with electrical gate switches.

[Statutory Authority: RCW 70.87.020, 70.87.030, 70.87.034, 70.87.120, 70.87.185, 70.87.190, 2002 c 98, 2003 c 143 and 2004 c 66. 04-12-047, § 296-96-09003, filed 5/28/04, effective 6/30/04.]

WAC 296-96-09004 Do jumps (increased travel) have to be inspected? Yes. Personnel hoists that have been increased in height (jumped) must be inspected before being allowed to run to the new landings.

[Statutory Authority: RCW 70.87.020, 70.87.030, 70.87.034, 70.87.120, 70.87.185, 70.87.190, 2002 c 98, 2003 c 143 and 2004 c 66. 04-12-047, § 296-96-09004, filed 5/28/04, effective 6/30/04.]

Material Hoists

WAC 296-96-10001 What regulations apply to material hoists? All material hoists must comply with the American National Standard Institute ANSI A10.5-1992 edition or the latest published edition adopted by ANSI, Safety Requirements for Material Hoists.

[Statutory Authority: RCW 70.87.020, 70.87.030, 70.87.034, 70.87.120, 70.87.185 and chapter 70.87 RCW. 01-02-026, § 296-96-10001, filed 12/22/00, effective 1/22/01.]

WAC 296-96-10002 Do jumps (increased travel) have to be inspected? Yes. Material hoists that have been increased in height (jumped) must be inspected before being allowed to run to the new landings.

[Statutory Authority: RCW 70.87.020, 70.87.030, 70.87.034, 70.87.120, 70.87.185, 70.87.190, 2002 c 98, 2003 c 143 and 2004 c 66. 04-12-047, § 296-96-10002, filed 5/28/04, effective 6/30/04.]

PART C5 - ADDITIONAL TYPES OF CONVEYANCES

Belt Manlifts

WAC 296-96-11001 What regulations apply to belt manlifts? WAC 296-96-11010 through 296-96-11078 applies to all existing belt manlifts. After the effective date of these rules all belt manlifts must be installed according to Belt Manlifts USAS A90.1-1997.

[Statutory Authority: RCW 70.87.020, 70.87.030, 70.87.034, 70.87.120, 70.87.185, 70.87.190, 2002 c 98, 2003 c 143 and 2004 c 66. 04-12-047, § 296-96-11001, filed 5/28/04, effective 6/30/04. Statutory Authority: RCW 70.87.020, 70.87.030, 70.87.034, 70.87.120, 70.87.185 and chapter 70.87 RCW. 01-02-026, § 296-96-11001, filed 12/22/00, effective 1/22/01.]

WAC 296-96-11010 What are the definitions for belt manlifts? "Closed type handhold" a cup-shaped handhold with the handgrip surface uncovered in the direction of travel and covered on the opposite run.

"Factor of safety" is the ratio of the ultimate strength of the material used to manufacture a part to the allowable stress on that part when it is subjected to full load operating conditions.

"Handhold" or **"Handgrip"** is the device attached to the manlift belt to assist a passenger in maintaining balance when using the manlift. For the purposes of this chapter, the word "handhold" is used for both "handhold" and "handgrip."

"Limit switch" is a safety device that stops power to the manlift motor and applies the brakes if a loaded step passes the top terminal landing.

"Manlift" is a device using a power-driven, endless belt with attached handholds and steps or platforms to transport people from floor to floor.

"Open type handhold" is a handhold with a fully uncovered handgrip surface.

"Rated speed" is the operating speed for which a manlift is designed and installed.

"Step" or **"Platform"** is the passenger carrying part of a manlift. For the purposes of this chapter, the word "step" is used for both "step" and "platform."

[Statutory Authority: RCW 70.87.020, 70.87.030, 70.87.034, 70.87.120, 70.87.185 and chapter 70.87 RCW. 01-02-026, § 296-96-11010, filed 12/22/00, effective 1/22/01.]

WAC 296-96-11016 What general requirements apply to belt manlift landings? (1) Vertical clearance between the floor or mounting platform and the lower edge of the conical guard above it must be at least 7 feet, 6 inches. When this clearance is not possible, access to the manlift must be prohibited and the space where the runway passes through the platform floor must be enclosed.

(2) Floor space adjacent to floor openings must be kept clear and free of obstructions at all times.

(3) Adequate lighting (not less than 5 foot-candle power) must be provided at each floor landing whenever the lift is in use.

(4) The landing surfaces at all entrances and exits must provide safe footing and must have a coefficient of friction of at least 0.5 to help insure safe footing.

(5) Emergency landings must be provided so that the maximum distance a person must travel on the emergency

ladder between an emergency landing and a floor landing is 25 feet. Emergency landings must:

(a) Be accessible from both runs of the lift;

(b) Give access to the emergency ladder; and

(c) Be completely enclosed with a standard railing and toeboard.

[Statutory Authority: RCW 70.87.020, 70.87.030, 70.87.034, 70.87.120, 70.87.185, 70.87.190, 2002 c 98, 2003 c 143 and 2004 c 66. 04-12-047, § 296-96-11016, filed 5/28/04, effective 6/30/04. Statutory Authority: RCW 70.87.020, 70.87.030, 70.87.034, 70.87.120, 70.87.185 and chapter 70.87 RCW. 01-02-026, § 296-96-11016, filed 12/22/00, effective 1/22/01.]

WAC 296-96-11019 What requirements apply to the guards and cones of belt manlift landings? (1) On the ascending side of the lift, all landings must have a beveled guard or cone that meets the following requirements:

(a) Where possible, a cone must make an angle with the horizontal of at least 45 degrees. A cone angle of 60 degrees or more must be used where ceiling heights permit.

(b) Where possible, the guard or cone must extend at least 42 inches outward from any belt handhold. A guard or cone must not extend beyond the upper surface of the floor above.

(c) A cone must be built of sheet steel (at least No. 18 U.S. gauge) or any material of equivalent strength or stiffness. The lower edge of a cone must be rolled to a minimum diameter of 1/2 inch. The interior of a cone must be smooth with no protruding rivets, bolts or screws.

(2) All obstructions must be guarded just like floor openings with the same minimum distances observed.

[Statutory Authority: RCW 70.87.020, 70.87.030, 70.87.034, 70.87.120, 70.87.185, 70.87.190, 2002 c 98, 2003 c 143 and 2004 c 66. 04-12-047, § 296-96-11019, filed 5/28/04, effective 6/30/04. Statutory Authority: RCW 70.87.020, 70.87.030, 70.87.034, 70.87.120, 70.87.185 and chapter 70.87 RCW. 01-02-026, § 296-96-11019, filed 12/22/00, effective 1/22/01.]

WAC 296-96-11022 What requirements apply to guarding lift entrances and exits? (1) All manlift floor or landing entrances and exits must be guarded by either a maze (staggered railing) or a handrail equipped with self-closing gates.

(2) When a maze is used:

(a) Maze or staggered openings must not allow direct passage between a platform enclosure and the outer floor space;

(b) Rails must be located between 2 and 4 feet from the edge of the opening as measured at right angles to the face of the belt; and

(c) At openings, the intersection of the top rail and the end post must form a bend or standard long sweep "ell."

(3) When a handrail is used:

(a) Rails must be standard guardrails with rounded corners, toeboards and meet the guard rail requirements adopted according to chapter 49.17 RCW; and

(b) Gates must have rounded corners, open outward, and be self-closing.

(4) Unless prevented by building design, all entrances and exits at all landings must be in the same relative location.

[Statutory Authority: RCW 70.87.020, 70.87.030, 70.87.034, 70.87.120, 70.87.185, 70.87.190, 2002 c 98, 2003 c 143 and 2004 c 66. 04-12-047, § 296-96-11022, filed 5/28/04, effective 6/30/04. Statutory Authority: RCW 70.87.020, 70.87.030, 70.87.034, 70.87.120, 70.87.185 and chapter 70.87 RCW. 01-02-026, § 296-96-11022, filed 12/22/00, effective 1/22/01.]

WAC 296-96-11025 What structural requirements apply to floor opening guards? Except on the entrance or exit side, floor openings at each landing must be guarded.

(1) The guards must be constructed by one of the following methods:

(a) A standard railing and toeboard;

(b) Panels of wire mesh (not less than No. 10 U.S. gauge);

(c) Panels of expanded metal (not less than No. 13 U.S. gauge);

(d) Panels of sheet metal (not less than No. 13 U.S. gauge); or

(e) Metal on a frame of either angle iron (at least 1 1/4 by 1 1/8 inch) or 1 1/4 inch iron pipe.

(2) When a belt manlift is installed in a stairwell, a standard guardrail must be placed between the floor openings and the stairway.

(3) Rails or guards must be:

(a) At least 42 inches high on the up-running side and 66 inches high on the down-running side; and

(b) Be located not more than one foot from the edge of the floor opening.

(4) If a guardrail is used, the section of the guard above the rail may be constructed:

(a) According to WAC 296-96-10025(1); or

(b) Using either vertical or horizontal bars capable of rejecting a 6-inch diameter ball.

[Statutory Authority: RCW 70.87.020, 70.87.030, 70.87.034, 70.87.120, 70.87.185 and chapter 70.87 RCW. 01-02-026, § 296-96-11025, filed 12/22/00, effective 1/22/01.]

WAC 296-96-11028 What structural requirements apply to floor landing guards? Expanded metal, sheet metal or wooden guards must be installed on each floor landing to prevent people from placing their hands in areas where step-rollers operate. These guards must be installed on each exposed side of the lift and extend from the floor to a height of 7 feet.

[Statutory Authority: RCW 70.87.020, 70.87.030, 70.87.034, 70.87.120, 70.87.185 and chapter 70.87 RCW. 01-02-026, § 296-96-11028, filed 12/22/00, effective 1/22/01.]

WAC 296-96-11031 What requirements apply to bottom landings? (1) Bottom landing clear areas:

(a) Where possible, the clear area of a bottom landing must be at least the size of the area enclosed by guardrails on the floors above;

(b) A clear area must be free of stairs and ladders; and

(c) If a wall on the bottom landing is located in front of the down-running side of the belt, it must be installed at least 48 inches away from the belt face.

(2) The lowest landing served by the lift must support the lower (boot) pulley installation.

(3) A mounting platform must be installed on the lowest landing unless the landing floor is at or above the point at which the upper surface of the belt steps assume or leave a horizontal position.

(4) If a mounting platform is installed, it must be located in front of or to one side of the up/down run.

[Statutory Authority: RCW 70.87.020, 70.87.030, 70.87.034, 70.87.120, 70.87.185 and chapter 70.87 RCW. 01-02-026, § 296-96-11031, filed 12/22/00, effective 1/22/01.]

WAC 296-96-11034 What requirements apply to top clearance? (1) When the center of the head pulley is more than 6 feet above the top landing, an emergency landing and ladder must be installed.

(2) The location of the emergency landing must be 24 inches below the center of the head pulley.

[Statutory Authority: RCW 70.87.020, 70.87.030, 70.87.034, 70.87.120, 70.87.185 and chapter 70.87 RCW. 01-02-026, § 296-96-11034, filed 12/22/00, effective 1/22/01.]

WAC 296-96-11037 What requirements apply to emergency exit ladders? Emergency exit ladders must be:

(1) A fixed metal type;

(2) Accessible from either the "up" or "down" path of the lift;

(3) Installed when the vertical distance between landings exceeds 20 feet; and

(4) Constructed to comply with current general safety standards except enclosed cages need not be built.

[Statutory Authority: RCW 70.87.020, 70.87.030, 70.87.034, 70.87.120, 70.87.185 and chapter 70.87 RCW. 01-02-026, § 296-96-11037, filed 12/22/00, effective 1/22/01.]

WAC 296-96-11040 What lighting requirements apply to belt manlifts? (1) When a lift is in operation, both runs must be illuminated at all points with an intensity of at least one foot-candle.

(2) Lighting control in runways must be:

(a) Circuits tied permanently into the building circuits (no switches);

(b) Near the starting switch that controls the lift motor; or

(c) Separate switches located on every landing and with each switch having the capability of turning on all lights throughout the entire runway.

[Statutory Authority: RCW 70.87.020, 70.87.030, 70.87.034, 70.87.120, 70.87.185 and chapter 70.87 RCW. 01-02-026, § 296-96-11040, filed 12/22/00, effective 1/22/01.]

WAC 296-96-11045 What drive machine requirements apply to belt manlifts? (1) Belt manlifts must be driven either by directly connected machines or by multiple "V" belts.

(2) Cast iron gears must not be used.

(3) Brakes:

(a) On direct connected machines, the brake must be mechanically applied to the motor shaft and released electronically.

(b) On "V" belt driven machines, the brake must be mechanically applied to the input shaft and released electronically.

(c) All brakes must be capable of stopping and holding the lift while carrying its rated capacity.

(4) Belts:

(a) Belts may not have more than one splice per belt.

(b) There shall not be more than one inch of space between the opposing ends of the belt.

(c) A belt manlift that has evidence of severe belt damage must be removed from service immediately. Belts with severe belt damage may not be repaired and/or returned to service. "Severe belt damage" means that the protective outer cover of a belt becomes cut, cracked or separated exposing damaged inner fabric, and such damage extends across the full width of the belt, spans between adjacent bolt holes, or damage goes through the entire thickness of the inner fabric. A torn belt is also considered severe.

Exception: A lap splice that has become cracked or damaged may be converted to a butt splice and returned to service, provided that the damaged area on the splice is completely removed.

(d) The conversion of a lap splice to a butt splice does not constitute a repair.

(e) A belt that has evidence of superficial belt cover damage while in use on a manlift is not required to be replaced. "Superficial belt cover damage" means that the protective outer cover of a belt becomes scratched, cut or cracked exposing the inner fabric. Such damage may not be continuous across the full width of the belt.

(5) Belts fastening:

(a) Belts must be fastened either by a lap splice or a butt splice with a strap on the belt side opposite the pulley.

(b) For lapped splices on manlifts with travel distances not exceeding 100 feet, the overlap of the belt at the splice must be at least 3 feet; or

(c) For lapped splices exceeding 100 feet, the overlap at the splice must be at least 4 feet.

(d) For butt splices on manlifts with travel distances not exceeding 100 feet, the strap must extend at least 3 feet on one side of the butt; or

(e) For butt splices not exceeding 100 feet, the strap must extend at least 4 feet on one side of the butt.

(f) For 12-inch belts, the joint must be fastened with a minimum of 20 special elevator bolts with minimum diameters of 1/4 inch. To effectively cover the belt joint area, these bolts must be arranged symmetrically in 5 rows.

(g) For a 14-inch belt, the minimum number of bolts is 23.

(h) For a 16-inch belt, the minimum number of bolts is 27.

(6) All installations must use machines designed and constructed to hold the driving pulley when there is shaft failure or overspeed.

[Statutory Authority: RCW 70.87.020, 70.87.030, 70.87.034, 70.87.120, 70.87.185, 70.87.190, 2002 c 98, 2003 c 143 and 2004 c 66. 04-12-047, § 296-96-11045, filed 5/28/04, effective 6/30/04. Statutory Authority: RCW 70.87.020, 70.87.030, 70.87.034, 70.87.120, 70.87.185 and chapter 70.87 RCW. 01-02-026, § 296-96-11045, filed 12/22/00, effective 1/22/01.]

WAC 296-96-11048 What is an acceptable operating speed for a belt manlift? The maximum belt speed of a belt manlift is 80 feet per minute. No belt manlift may be installed that exceeds this maximum speed limit, and all belt manlifts in a given location should run at approximately the same speed.

[Statutory Authority: RCW 70.87.020, 70.87.030, 70.87.034, 70.87.120, 70.87.185 and chapter 70.87 RCW. 01-02-026, § 296-96-11048, filed 12/22/00, effective 1/22/01.]

WAC 296-96-11051 What are the construction requirements for steps? (1) Measured from the belt to the edge of the step, the minimum depth of a step is 12 inches and the maximum depth is 14 inches.

(2) Step width cannot be less than the width of the belt to which it is attached.

(3) Measured from the upper surface of one step to the upper surface of the next step above, the distance between steps must be at least 16 feet and the steps must be equally spaced along the belt.

(4) A step must be attached to the belt so its surface approximates a right angle with the face of the belt enabling the step to travel in basically a horizontal position with the "up" and "down" path of the belt.

(5) The working (upper) surface of a step must be made of either a material having nonslip characteristics (possessing a coefficient of friction of not less than 0.5) or be completely covered with a securely attached nonslip tread.

(6) Step supports (frames) and guides must be sufficiently strong to prevent:

(a) The disengagement of any step roller;

(b) Any appreciable misalignment; or

(c) Any visible deformation of the step or its support.

(7) Steps must have corresponding handholds.

(8) If a step is removed for any reason, the handholds immediately above and below it must be removed before the lift resumes operation.

[Statutory Authority: RCW 70.87.020, 70.87.030, 70.87.034, 70.87.120, 70.87.185 and chapter 70.87 RCW. 01-02-026, § 296-96-11051, filed 12/22/00, effective 1/22/01.]

WAC 296-96-11054 What requirements apply to the location and construction of handholds? (1) Handholds attached to the belt must be provided and installed so that they are not less than 4 feet nor more than 4 feet 8 inches above the step tread. These handholds must be available on both the "up" and "down" run of the belt.

(2) All handhold grab surfaces must be at least 4 1/2 inches in width. Fastenings must not come within one inch of the belt edge.

(3) All handholds must be capable of withstanding, without damage, a 300 pound load applied parallel to the belt run.

(4) All handholds must have corresponding steps. When a handhold is removed for any reason, the corresponding step and handhold for the opposite direction of travel must also be removed before the lift resumes operation.

[Statutory Authority: RCW 70.87.020, 70.87.030, 70.87.034, 70.87.120, 70.87.185 and chapter 70.87 RCW. 01-02-026, § 296-96-11054, filed 12/22/00, effective 1/22/01.]

WAC 296-96-11057 What requirements apply to "up-limit stops"? (1) Two separate automatic stop devices must be provided to cut off the power and apply the brake when a loaded step passes the upper terminal landing. One of these devices must consist of a switch mechanically operated by the belt or stop roller. The second device must consist of any of the following:

(a) A roller switch located above but not in line with the first switch;

(b) A photocell and light source (an "electric eye"); or

(c) A switch activated by a lever, bar, rod or plate.

(i) If a plate is used, it should be positioned above the head pulley so it barely clears a passing step.

(ii) If a bar is used, the bar must be of the "breakaway" type.

(2) The stop device must stop the lift before a loaded step reaches a point 24 inches above the top terminal landing.

(3) Once the lift has stopped, the automatic stop device must be manually reset. Therefore, this device must be located on the top landing where the reset person has a clear view of both the "up" and "down" runs of the lift; and it must be impossible to reset from a step.

(4) Electric stop devices must meet the following requirements:

(a) All electric switches that directly open the main motor circuit must be multiple type switches;

(b) Photoelectric devices must be designed and installed so that failure of the light source, the light sensitive element or any vacuum tube used in the circuit will result in shutting off power to the driving motor;

(c) In areas where flammable vapors or dust may be present, all electrical installations must be in accordance with the NEC requirements for those installations; and

(d) All controller contacts carrying main motor current must be copper to carbon types unless the circuit is simultaneously broken at two or more points or the contacts are immersed in oil.

[Statutory Authority: RCW 70.87.020, 70.87.030, 70.87.034, 70.87.120, 70.87.185, 70.87.190, 2002 c 98, 2003 c 143 and 2004 c 66. 04-12-047, § 296-96-11057, filed 5/28/04, effective 6/30/04. Statutory Authority: RCW 70.87.020, 70.87.030, 70.87.034, 70.87.120, 70.87.185 and chapter 70.87 RCW. 01-02-026, § 296-96-11057, filed 12/22/00, effective 1/22/01.]

WAC 296-96-11060 What requirements apply to emergency stops? All belt manlifts must have emergency stop devices that:

(1) Are located within easy reach of the "up" and "down" run of the belt;

(2) Stop power to the lift and apply the lift brake when pulled in the direction of travel;

(3) Have a treadle switch (manual reset type) that is located below the lowest landing on the belt's "down" side and, if a person fails to get off at the lowest landing, stops the lift and ejects the person from the step as it approaches the boot pulley;

(4) Are made of cotton rope with a wire center, manila or sisal rope, or metal pipe or tubing. Wire rope cannot be used, unless covered with marlin. Rope stops must be at least 3/8 inch in diameter; and

(5) An emergency stop may be used for normal stopping and starting if the lift does not run continuously.

[Statutory Authority: RCW 70.87.020, 70.87.030, 70.87.034, 70.87.120, 70.87.185 and chapter 70.87 RCW. 01-02-026, § 296-96-11060, filed 12/22/00, effective 1/22/01.]

WAC 296-96-11066 What are the warning sign requirements? (1) Instructional signs explaining how to use the belt lift must be:

(a) Conspicuously posted on each landing or stenciled on the belt;

(b) Printed in an easily read style with letters at least one inch in height;

(c) Printed in a color that clearly contrasts with the background surface (for example, white or yellow on black or black on white or gray); and

(d) Examples of instructional signs are:

"Face the belt"

"Use the handhold"

"To stop - pull rope"

(2) Warning signs and/or lights must include an illuminated sign or red warning light announcing the top floor and must be within easy view of an ascending passenger.

(a) If a sign, it must be located no more than 2 feet above the top terminal landing and printed in block letters (at least 2-inches in height) displaying the words, "Top floor - get off."

(b) If a red light, it must have at least a 40-watt rating and be located immediately below the upper terminal landing where it will shine in the belt passenger's face.

(3) There must be conspicuous signs on each landing that read, "Employees only - Visitors keep off," printed in block letters (at least 2-inches in height) in a color that sharply contrasts with the background.

(4) A sign or red light must be conspicuously posted above the bottom landing announcing its approach. These must be:

(a) If a sign, printed in block letters (at least two-inches in height) that sharply contrast with the background and reads, "Bottom floor - get off."

(b) If a light, rated at least forty watts.

(5) An electronic warning buzzer must be installed 5 feet above the bottom landing on the down side of the belt to warn belt riders of the approaching landing. This warning buzzer must be automatically activated by load weight on a step.

[Statutory Authority: RCW 70.87.020, 70.87.030, 70.87.034, 70.87.120, 70.87.185 and chapter 70.87 RCW. 01-02-026, § 296-96-11066, filed 12/22/00, effective 1/22/01.]

WAC 296-96-11070 Can you carry tools and materials on a belt manlift? (1) No freight or packaged goods may be carried on any manlift;

(2) No pipe, lumber, or other construction materials may be handled on any manlift; and

(3) No tools except those which will fit entirely within a pocket of ordinary working clothes may be carried on any manlift, except as follows:

(a) Tools may be carried in a canvas bag not larger than 11 inches by 13 inches;

(b) The bag must have a leather bottom; and

(c) The bag must have loops or handles to be carried in the passenger's hand while riding the manlift. Shoulder straps are prohibited.

[Statutory Authority: RCW 70.87.020, 70.87.030, 70.87.034, 70.87.120, 70.87.185 and chapter 70.87 RCW. 01-02-026, § 296-96-11070, filed 12/22/00, effective 1/22/01.]

WAC 296-96-11078 What is required for belt manlift inspections? (1) All manlifts must be inspected by a qualified person, designated by the lift's owner, at least once every 30 days.

(2) The inspection must cover (but is not limited to) the following items:

- Belt and belt tension
- Bottom (boot) and pulley
- Brake
- Clearance
- Drive pulley
- Driving mechanism
- Electrical switches
- Guardrails
- Handholds and fastenings
- Lubrication
- Motor
- Pulley supports
- Rails, rail supports and fastenings
- Rollers and slides
- Signal equipment
- Steps and fastenings
- Warning signs and lights

(3) A written record must be kept of results of each inspection, and it must be made available to all inspectors. This information must be recorded under the monthly portion of the test log required by Appendix A of ASME A90.1-1997.

(4) For purposes of this section "adequate lighting" means five-foot candles.

[Statutory Authority: RCW 70.87.020, 70.87.030, 70.87.034, 70.87.120, 70.87.185, 70.87.190, 2002 c 98, 2003 c 143 and 2004 c 66. 04-12-047, § 296-96-11078, filed 5/28/04, effective 6/30/04. Statutory Authority: RCW 70.87.020, 70.87.030, 70.87.034, 70.87.120, 70.87.185 and chapter 70.87 RCW. 01-02-026, § 296-96-11078, filed 12/22/00, effective 1/22/01.]

WAC 296-96-11080 Under what conditions is a five-year test administered? A five-year test of the belt manlift must be conducted, and the test must be administered under the following conditions:

(1) Qualified people will conduct the test. A qualified person is either:

(a) An elevator mechanic licensed in the appropriate category of the conveyance being tested;

(b) The representative of a firm that manufactured the particular belt manlift who holds a current temporary mechanic's license in this state; or

(c) The representative of a firm that manufactured the particular belt manlift who is working under the direct supervision of an elevator mechanic licensed in the appropriate category of the conveyance being tested.

(2)(a) The up capacity of the belt manlift must be tested with two hundred pounds on each horizontal step. During the up-run portion of the test the belt manlift must not show appreciable slip of the belt when standing or running at rated speed.

(b) The down capacity of the belt manlift must be tested with two hundred pounds on each horizontal step. During the down-run portion of the test the belt manlift must not show appreciable slip of the belt when standing or running at the rated speed.

The brake shall stop and hold the belt with test load within a maximum of twenty-four inches of travel.

(3) After the five-year test has been performed a tag indicating the date of the test and name of the company performing the test must be attached in a visible area of the drive motor machine.

[Statutory Authority: RCW 70.87.020, 70.87.030, 70.87.034, 70.87.120, 70.87.185, 70.87.190, 2002 c 98, 2003 c 143 and 2004 c 66. 04-12-047, § 296-96-11080, filed 5/28/04, effective 6/30/04.]

Electric Manlifts

WAC 296-96-13135 What are the requirements for electric manlifts? WAC 296-96-13135 through 296-96-13171 are the minimum requirements for all existing electric manlifts.

[Statutory Authority: RCW 70.87.020, 70.87.030, 70.87.034, 70.87.120, 70.87.185, 70.87.190, 2002 c 98, 2003 c 143 and 2004 c 66. 04-12-047, § 296-96-13135, filed 5/28/04, effective 6/30/04.]

WAC 296-96-13139 What structural requirements apply to hoistway enclosures and landings? (1) A hoistway must be fully enclosed, or enclosed on all landings to a height of six feet above the landing floor or six feet above the highest working level or stair level adjacent to the hoistway.

(2) Perforated enclosures can be used where fire resistance is not required. However, such an enclosure must use at least No. 13 U.S. gauge steel wire, if a steel wire grill or expanded metal grill type, and it must have openings that reject a one-inch diameter ball.

(3) All landings must be properly and adequately lighted.

(4) For purposes of this section "adequate lighting" means five-foot candles.

[Statutory Authority: RCW 70.87.020, 70.87.030, 70.87.034, 70.87.120, 70.87.185, 70.87.190, 2002 c 98, 2003 c 143 and 2004 c 66. 04-12-047, § 296-96-13139, filed 5/28/04, effective 6/30/04.]

WAC 296-96-13143 What structural requirements apply to hoistway gates and doors? (1) Gates may be constructed of wood slat, steel wire grill, expanded metal or solid material provided that all openings reject a two-inch diameter ball and resist a two hundred fifty pound horizontal thrust.

(a) Steel wire and expanded metal gates must be constructed of at least No. 13 U.S. gauge steel.

(b) Wood slat gates must have slats at least two inches wide and one-half inch thick, nominal size.

(c) Solid material gates must be constructed of at least one-eighth inch reinforced sheet steel or one-half inch plywood.

(2) Gates may be horizontal swinging, vertical or horizontal sliding or biparting types, and must:

(a) Span the full width of the elevator car;

(b) Extend from one inch above the landing floor to at least six feet above it;

(c) Not swing into the hoistway; and

(d) Be equipped with interlocks or mechanical locks and electric contacts that prevent the gate from opening when a car is away from a landing.

(3) Hoistway doors must be closed before the car can leave the landing. Once the car leaves the landing, the door must be latched so that it will not open when the elevator is not at the landing.

[Statutory Authority: RCW 70.87.020, 70.87.030, 70.87.034, 70.87.120, 70.87.185, 70.87.190, 2002 c 98, 2003 c 143 and 2004 c 66. 04-12-047, § 296-96-13143, filed 5/28/04, effective 6/30/04.]

WAC 296-96-13145 What structural requirements apply to elevator cars? Elevator cars must be fully enclosed to the car height or to a height of at least six feet six inches, whichever is greater.

(1) If constructed of solid materials, cars must be capable of withstanding a horizontal thrust of seventy-five pounds while deflecting no more than one-quarter inch.

(2) If constructed of perforated materials, all openings must be capable of rejecting at least a one-inch diameter ball.

(3) Cars frames must be of substantial metal or wood construction.

(a) Metal frames must have a safety factor of four.

(b) Wood frames must have a safety factor of six.

(c) Wood frames must be constructed with gussets and bolts secured with large washers, lock washers and nuts.

(4) Cars must have platforms whose inside dimensions do not exceed thirty inches on each side (six and one-quarter square feet area).

(5) Cars must have substantial protective tops. These tops:

(a) May have hinged front halves;

(b) May be made of No. 9 U.S. wire-gauge screen, No. 11 gauge expanded metal, No. 14 gauge sheet steel, or one-quarter inch or heavier plywood.

(c) If made of wire screen or metal with openings, must reject a one-half inch diameter ball.

[Statutory Authority: RCW 70.87.020, 70.87.030, 70.87.034, 70.87.120, 70.87.185, 70.87.190, 2002 c 98, 2003 c 143 and 2004 c 66. 04-12-047, § 296-96-13145, filed 5/28/04, effective 6/30/04.]

WAC 296-96-13147 What structural requirements apply to elevator doors? All elevators must have car doors, except on fully enclosed hoistways equipped with hoistway gates and enclosed from the top of the hoistway opening to the ceiling on the landing side.

(1) Car doors must be:

(a) Constructed of solid or perforated material which is capable of resisting a seventy-five pound thrust without deflecting one-quarter inch. If perforated material is used, it must reject a one-inch diameter ball.

(b) Biparting or otherwise horizontally swung provided the door swings within the elevator car.

(c) Equipped with a positive locking latch device that resists a two hundred fifty pound thrust.

(2) Interlocks or a combination consisting of mechanical locks and electric contacts must be provided for all elevators having car doors. An electrical/mechanical interlock must be provided on car gates on elevators in unenclosed hoistways unless a safe means of self-evacuation is provided. Such means must be approved by the department.

[Statutory Authority: RCW 70.87.020, 70.87.030, 70.87.034, 70.87.120, 70.87.185, 70.87.190, 2002 c 98, 2003 c 143 and 2004 c 66. 04-12-047, § 296-96-13147, filed 5/28/04, effective 6/30/04.]

WAC 296-96-13149 What are the structural requirements for counterweights, counterweight enclosures, and counterweight fastenings? All counterweights must be fully enclosed at landings or at the path of travel.

(1) At the bottom of a counterweight enclosure, there must be an inspection opening large enough to allow the inspection of cable fastenings, counterweight and buffer.

(2) Rectangular shaped counterweights must be secured by at least two and one-half inch mild steel bolts with lock nuts.

(3) Round counterweights must be fastened with a center bolt at least three quarter inch in diameter and secured with a lock nut.

(4) All bolt eyes must be welded closed.

(5) Cable fastenings shall be by babbitted tapered elevator sockets or other acceptable methods. If cable clamps are used, a minimum of three cable clamps must be provided. U-shaped clamps shall not be acceptable.

[Statutory Authority: RCW 70.87.020, 70.87.030, 70.87.034, 70.87.120, 70.87.185, 70.87.190, 2002 c 98, 2003 c 143 and 2004 c 66. 04-12-047, § 296-96-13149, filed 5/28/04, effective 6/30/04.]

WAC 296-96-13151 What construction requirements apply to car guide rails? Each electric manlift must be equipped with at least two guide rails. Guide rails must:

(1) Extend at least six inches beyond the maximum travel distance of the car with the buffers compressed.

(2) Be securely fastened to a vertical support for the full length of the elevator's travel.

(3) Be constructed of vertical grain fir, angle iron:

(a) If constructed with vertical grain fir, the rails must be at least one and one-half inch by one and one-half inch and not vary in thickness by more than three-sixteenths inch on brake surfaces.

(b) If constructed with angle iron, the angle iron must be at least one-quarter inch by two inch by two inch.

(4) Be able to resist a two hundred fifty pound horizontal thrust.

(5) Be able to resist more than one-half inch total deflection when the car safety is applied.

[Statutory Authority: RCW 70.87.020, 70.87.030, 70.87.034, 70.87.120, 70.87.185, 70.87.190, 2002 c 98, 2003 c 143 and 2004 c 66. 04-12-047, § 296-96-13151, filed 5/28/04, effective 6/30/04.]

WAC 296-96-13153 What construction requirements apply to hoisting ropes? There must be at least two hoisting ropes. Each rope must be:

(1) Made of a good grade of elevator traction wire rope;

(2) At least three-eighths inches in diameter and possessing a safety factor of five;

(3) Fastened by babbitted tapered elevator sockets or other acceptable methods. If cable clamps are used, a minimum of three cable clamps must be provided. U-shaped clamps shall not be acceptable.

(4) Long enough so the car platform will be no more than six inches above the top landing when the counterweight buffer is fully compressed, and at least six inches from the counterbalance sheave when the car buffer is fully compressed.

[Statutory Authority: RCW 70.87.020, 70.87.030, 70.87.034, 70.87.120, 70.87.185, 70.87.190, 2002 c 98, 2003 c 143 and 2004 c 66. 04-12-047, § 296-96-13153, filed 5/28/04, effective 6/30/04.]

WAC 296-96-13155 What are the requirements for a hoistway space? There must not be habitable space below an elevator hoistway or counterweight shaft unless the floor above the space can withstand an impact one hundred twenty-five percent greater than the impact generated by a free falling car or counterweight falling from the full height of the hoistway.

[Statutory Authority: RCW 70.87.020, 70.87.030, 70.87.034, 70.87.120, 70.87.185, 70.87.190, 2002 c 98, 2003 c 143 and 2004 c 66. 04-12-047, § 296-96-13155, filed 5/28/04, effective 6/30/04.]

WAC 296-96-13157 What requirements apply to car safeties? All cars suspended or operated from overhead machinery must be equipped with an approved car safety capable of stopping and holding the car while carrying its rated load.

(1) Car safeties must be mechanically operated and not be affected by any interruptions in the electrical circuit.

(2) Car safeties and governor controlled safeties must operate automatically and the control circuit must be broken in the event of cable breakage.

(3) A no-load annual safety test must be performed and a tag with the date and company conducting the test must be attached to the governor with a wire and seal. A safety tag must also be permanently affixed to the inside of the car.

(4) A five-year full load test must be performed and a safety tag with the date and company conducting the test must be permanently attached to the governor with a wire and seal. A safety tag must also be permanently affixed to the inside of the car. Documentation must be submitted to the department.

Qualified people will conduct the test. A qualified person is either:

(a) An elevator mechanic licensed in the appropriate category for the conveyance being tested;

(b) The representative of a firm that manufactured the particular material lift and who holds a current temporary mechanic's license in this state; or

(c) The representative of a firm that manufactured the particular material lift who is working under the direct supervision of an elevator mechanic licensed in the appropriate category for the conveyance being tested.

(5) Separate safety tags must be used to distinguish the no-load annual safety test and the five-year full load test.

[Statutory Authority: RCW 70.87.020, 70.87.030, 70.87.034, 70.87.120, 70.87.185, 70.87.190, 2002 c 98, 2003 c 143 and 2004 c 66. 04-12-047, § 296-96-13157, filed 5/28/04, effective 6/30/04.]

WAC 296-96-13159 What requirements apply to brakes? All elevators must be equipped with brakes that engage mechanically and release electrically.

(1) Brakes must be located on the final drive of all elevator machines.

(2) The brake activating circuit must be designed so that interruption of power by the slack cable switch, control switch, and limit switches activate the brake.

(3) The brakes must activate under short circuit, phase failure, or reverse phase conditions.

[Statutory Authority: RCW 70.87.020, 70.87.030, 70.87.034, 70.87.120, 70.87.185, 70.87.190, 2002 c 98, 2003 c 143 and 2004 c 66. 04-12-047, § 296-96-13159, filed 5/28/04, effective 6/30/04.]

WAC 296-96-13161 What requirements apply to car controls and safety devices? (1) Car controls may be automatic push button, constant pressure push button or momentary push button types. **Hand rope and car switch controls must not be used.**

(2) If a car is not equipped with constant pressure push button controls, then it must be equipped with a manually operated emergency stop switch that is clearly marked "emergency stop."

(3) Terminal limiting devices must operate independently of car controls and must automatically stop the car at the top and bottom terminal landings.

(4) All winding drum machine type elevators must be equipped with top and bottom final limit switches.

(5) A manual-reset slack rope device that breaks the circuit to the drive motor and brake must be installed on all winding drum type machines.

(6) All electric manlifts lifts must be equipped with an overspeed governor that must not exceed one hundred seventy-five feet per minute and must deenergize the brake control and motor drive circuits simultaneously when the car safety mechanism is activated.

(7) Car speeds for electric lifts must not exceed one hundred twenty-five feet per minute.

(8) Elevator controls and disconnects must be accessible and marked.

[Statutory Authority: RCW 70.87.020, 70.87.030, 70.87.034, 70.87.120, 70.87.185, 70.87.190, 2002 c 98, 2003 c 143 and 2004 c 66. 04-12-047, § 296-96-13161, filed 5/28/04, effective 6/30/04.]

WAC 296-96-13167 What requirements apply to elevator driving machines? (1) Elevator machines must be driven by approved-type units.

(a) On direct drive or approved worm gear driven type, a mechanically actuated, electrically released brake must be installed on the driving unit.

(b) On V belt driven types, a minimum of four belts, one-half inch minimum size, must be used to transmit power from the motor to the drive shaft and a mechanically activated, electrically released brake must be installed on the final drive shaft.

(2) Wherever practical, elevator machines must be installed on the top side of the supporting structure.

(3) All components of the driving mechanism and parts subject to stress involved in suspending the load or related equipment must be designed to withstand eight times the total weight to be suspended, including load, counterweight, car and cables.

(4) Gears must be made of steel or equivalent material. Cast iron gears are prohibited.

(5) A working platform, with railings complying with the applicable requirements adopted according to chapter 49.17 RCW, shall be provided to allow for safely working on equipment.

(6) A light with a switch must be located near the elevator driving machine or the machinery space.

(7) A means to lockout/tagout the elevator equipment must be located near the elevator driving machine or the machinery space.

(8) The elevator machinery shall be protected from the weather.

(9) All sheaves must be appropriately guarded per the requirements adopted according to chapter 49.17 RCW.

(10) Changes based on the requirement found in subsections (5) through (9) of this section must be completed within two years of the effective date of these rules.

[Statutory Authority: RCW 70.87.020, 70.87.030, 70.87.034, 70.87.120, 70.87.185, 70.87.190, 2002 c 98, 2003 c 143 and 2004 c 66. 04-12-047, § 296-96-13167, filed 5/28/04, effective 6/30/04.]

WAC 296-96-13169 What requirements apply to car and counterweight buffers? (1) All elevator cars must be equipped with adequate car buffers.

(2) All elevators using counterweights must be equipped with adequate counterweight buffers.

[Statutory Authority: RCW 70.87.020, 70.87.030, 70.87.034, 70.87.120, 70.87.185, 70.87.190, 2002 c 98, 2003 c 143 and 2004 c 66. 04-12-047, § 296-96-13169, filed 5/28/04, effective 6/30/04.]

WAC 296-96-13171 What other requirements apply to electric manlifts? (1) Adequate lighting must be provided at each landing and in the shaftway.

(2) A sign bearing the following information must be posted in a conspicuous place within the car:

(a) Total load limit in pounds;

(b) **"Maximum capacity-one person";** and

(c) **"For authorized personnel use only."**

(3) A properly working fire extinguisher must be present in each car.

(4) For purposes of this section "adequate lighting" means five-foot candles.

[Statutory Authority: RCW 70.87.020, 70.87.030, 70.87.034, 70.87.120, 70.87.185, 70.87.190, 2002 c 98, 2003 c 143 and 2004 c 66. 04-12-047, § 296-96-13171, filed 5/28/04, effective 6/30/04.]

Hand-Powered Manlifts

WAC 296-96-14010 What is the scope and application of the department's hand-powered manlift rules? WAC 296-96-14010 through 296-96-14080 apply to the installation, design, and use of all one-person capacity, hand powered, counterweighted elevators that must be inspected according to chapter 70.87 RCW.

[Statutory Authority: RCW 70.87.020, 70.87.030, 70.87.034, 70.87.120, 70.87.185 and chapter 70.87 RCW. 01-02-026, § 296-96-14010, filed 12/22/00, effective 1/22/01.]

WAC 296-96-14020 What construction requirements apply to hoistway landings and entrances? (1) Every hoistway landing must be protected on all sides other than the landing opening side with a standard guard rail and intermediate guard rail. All landing except the bottom landing must have a toe board installed on all sides except the landing opening side.

(2) All hoistway entrances must be not less than 6 feet 6 inches in height and in no case may the width exceed the corresponding car dimensions.

(3) All hoistway entrances must be provided with an approved maze or with a hoistway gate which must:

(a) Be at least 36 inches in height;

(b) Extend downward to within one inch of the landing sill;

(c) Be of the self-closing type, designed to swing horizontally out from the hoistway and closing against a full jam stop;

(d) Be located within 4 inches of the edge of the landing sill;

(e) Have a "DANGER" sign conspicuously posted on the landing side of the hoistway gate; and

(f) Withstand a 250 pound horizontal thrust.

(4) On new installations, all projections extending inwardly from a hoistway enclosure at the entrance side of the car platform must be beveled and guarded on their underside by a smooth solid material set at an angle of not less than 60 degrees nor more than 75 degrees from the horizontal when cars are not equipped with gates.

[Statutory Authority: RCW 70.87.020, 70.87.030, 70.87.034, 70.87.120, 70.87.185 and chapter 70.87 RCW. 01-02-026, § 296-96-14020, filed 12/22/00, effective 1/22/01.]

WAC 296-96-14025 What are acceptable hoistway clearances? (1) The minimum clearance between a car side and the hoistway enclosure is one inch.

(2) The clearance between a car platform and a landing sill must be at least 1/2 inch but not more than 1 1/2 inches.

[Statutory Authority: RCW 70.87.020, 70.87.030, 70.87.034, 70.87.120, 70.87.185 and chapter 70.87 RCW. 01-02-026, § 296-96-14025, filed 12/22/00, effective 1/22/01.]

WAC 296-96-14030 Can there be a habitable space beneath an elevator hoistway or counterweight shaft? There must not be habitable space below an elevator hoistway or counterweight shaft unless the floor above the space can withstand the impact of a freely falling hoistway car or counterweight dropping on it.

[Statutory Authority: RCW 70.87.020, 70.87.030, 70.87.034, 70.87.120, 70.87.185 and chapter 70.87 RCW. 01-02-026, § 296-96-14030, filed 12/22/00, effective 1/22/01.]

WAC 296-96-14035 What construction requirements apply to hoistway guide rails? (1) There must be a minimum of two opposing guide rails extending to a point six inches beyond the full height of travel of the car when the counterweight buffer is fully compressed.

(2) All rails must be attached by bolts, lag screws or other approved methods to a vertical supporting member which must not exceed 1/2 inch deflection with the application of a 250 pound horizontal thrust at any point.

(3) Wood guide rails must be at least 1 1/2 inch by 1 1/2 inch vertical grain fir or equivalent and must not vary more than 3/16 inch in thickness on the sides which the brakes contact. All joints must be kept smooth and even.

[Statutory Authority: RCW 70.87.020, 70.87.030, 70.87.034, 70.87.120, 70.87.185 and chapter 70.87 RCW. 01-02-026, § 296-96-14035, filed 12/22/00, effective 1/22/01.]

WAC 296-96-14040 What installation requirements apply to buffer springs? (1) All new installations must have spring buffers installed below the car and counterweights.

(2) All installations must have spring buffers attached below the counterweights.

(3) Hoisting ropes must not allow a car platform to be more than 8 inches above the top landing when the counterweight buffer spring is fully compressed.

[Statutory Authority: RCW 70.87.020, 70.87.030, 70.87.034, 70.87.120, 70.87.185 and chapter 70.87 RCW. 01-02-026, § 296-96-14040, filed 12/22/00, effective 1/22/01.]

WAC 296-96-14045 What construction specifications apply to hoistway cars? (1) The car must be built to the following specifications:

(a) The car platform must be no greater than 30 inches on either side (6.25 square feet area).

(b) The car frame and platform must be of steel or sound seasoned wood construction and be designed with a safety factor of not less than 4 for metal and 6 for wood, based on a maximum capacity of 250 pounds.

(c) All frame members must be securely bolted, riveted or welded and braced. If bolted, lock washers or lock nuts must be used.

(d) Where wooden frame members are bolted, large washers or metal plates must be used to minimize the possibility of splitting or cracking the wood.

(2) The sides of the car must be enclosed by a minimum of 2 safety guard rails with the top rail not less than 36 inches nor more than 42 inches from the car floor. Rails must sustain a horizontal thrust of 250 pounds. If solid material is used, it must be smooth surfaced and not less than 1/2 inch thickness, if wood; not less than 16 gauge thickness, if steel; and must be constructed from the car floor to a height of not less than 3 feet.

(a) Where the hoistway is not enclosed on the entrance side of the car, a self-locking or drop bar gate must be provided. The car gate may be of the folding type, horizontally swung, provided it swings into the car enclosure. Drop bar gates must be of two bar construction, parallelogram type, and conform to requirements specified for car guard rails.

(b) The car gate must drop into locking slots or be provided with a positive locking type latch capable of withstanding 250 pounds horizontal thrust.

(3) Every car must have a substantial protective top. The front half may be hinged. The protective top may be made from No. 9 U.S. wire gauge screen, No. 11 gauge expanded metal, No. 14 gauge sheet steel, 3/4 inch or heavier plywood. If made of wire screen or metal, the openings must reject a 1/2 inch diameter ball.

(4) Every car must have a proper rack to hold the balance weights. Weights must be contained in the proper rack when the car is in motion.

(5) A sign bearing the following information must be conspicuously posted within the car:

(a) Total load limit in pounds;

(b) "Maximum capacity one person"; and

(c) "For authorized personnel use only."

(6) Every car must be equipped with a spring loaded foot brake which:

(a) Operates independently of the car safeties;

(b) Operates in both directions and will stop and hold the car and its load; and

(c) Locks the car in its position automatically whenever the operator releases the pressure on the foot pedal.

(7) Every car must be equipped with a car safety device which:

(a) Applies to the sides of the main guide rails; and

(b) Stops and holds the car and its load immediately when the hoisting rope breaks.

(8) Every car must have a minimum clearance of 6 feet 6 inches from the top of the car platform to the bottom edge of the crosshead or any other obstruction.

(9) A tool box with minimum dimensions of 4 inches long by 3 inches deep must be provided and firmly attached to the car structure.

[Statutory Authority: RCW 70.87.020, 70.87.030, 70.87.034, 70.87.120, 70.87.185, 70.87.190, 2002 c 98, 2003 c 143 and 2004 c 66. 04-12-047, § 296-96-14045, filed 5/28/04, effective 6/30/04. Statutory Authority: RCW 70.87.020, 70.87.030, 70.87.034, 70.87.120, 70.87.185 and chapter 70.87 RCW. 01-02-026, § 296-96-14045, filed 12/22/00, effective 1/22/01.]

WAC 296-96-14050 What are the requirements for assembly, installation, and operation of sectional counterweights? (1) The assembly of sectional counterweights must conform to the following requirements:

(a) Rectangular counterweights must be held together by at least two tie rods 1/2 inch in diameter fastened with lock washers and double nuts or other approved means.

(b) One 3/4 inch rod may be used to hold the sections of a round counterweight together. Any additional sections or weights must be secured by an approved means.

(2) The eye bolt for the rope hitch must be attached to the counterweight in a manner that will prevent the eye bolt from coming loose. The eye of eye bolts must be welded to prevent it from opening.

(3) Every counterweight runway must be enclosed with substantial unperforated material for its full distance of travel. Inspection openings must be provided at either the top or bottom of the counterweight runway. These openings must be substantially covered at all times except when actually being used for inspection of counterweight fastenings.

(4) Workers must load the counterweight for the proper balance of the heaviest person using the elevator and others must use compensating weights, which must be available, to maintain a balance.

(5) On elevators with travel of 75 feet or more, a compensating chain or cable must be installed to maintain the proper balance of the counterweight to the car and load in all positions.

[Statutory Authority: RCW 70.87.020, 70.87.030, 70.87.034, 70.87.120, 70.87.185 and chapter 70.87 RCW. 01-02-026, § 296-96-14050, filed 12/22/00, effective 1/22/01.]

WAC 296-96-14055 What is the minimum acceptable sheave diameter? The minimum sheave diameter must be 40 times the diameter of the rope used. For example, a 3/8 inch rope requires a 15 inch sheave.

[Statutory Authority: RCW 70.87.020, 70.87.030, 70.87.034, 70.87.120, 70.87.185 and chapter 70.87 RCW. 01-02-026, § 296-96-14055, filed 12/22/00, effective 1/22/01.]

WAC 296-96-14060 What requirements apply to hoisting ropes? (1) Hoisting ropes must be of good grade traction elevator wire rope and must:

(a) Be not less than 3/8 inch in diameter.

(b) Provide a safety factor of 5 based on the maximum weight supported.

(c) Be of sufficient length to prevent the counterweight from striking the overhead structure when car is at the bottom, and prevent the car from striking the overhead before the counterweight is at its lower limit of travel.

(d) Cable fastenings shall be by babbitted tapered elevator sockets or other acceptable methods approved by the department. If cable clamps are used, a minimum of three cable clamps must be provided. U-shaped clamps shall not be acceptable.

(e) Where passed around a metal or other object less than three times the diameter of the cable, have a thimble of the correct size inserted in the eye.

(2) Approved sockets or fittings with the wire properly turned back and babbitted may be used in place of clamps noted in subsection (1)(d) of this section.

[Statutory Authority: RCW 70.87.020, 70.87.030, 70.87.034, 70.87.120, 70.87.185, 70.87.190, 2002 c 98, 2003 c 143 and 2004 c 66. 04-12-047, § 296-96-14060, filed 5/28/04, effective 6/30/04. Statutory Authority: RCW 70.87.020, 70.87.030, 70.87.034, 70.87.120, 70.87.185 and chapter 70.87 RCW. 01-02-026, § 296-96-14060, filed 12/22/00, effective 1/22/01.]

WAC 296-96-14065 What requirements apply to operating ropes? The operating rope must be of soft hemp or cotton at least 3/4 inch in diameter. It must be securely fastened at each end and must be in proper vertical alignment to prevent bending or cutting where it passes through the openings in the platform or the protective top of the car.

[Statutory Authority: RCW 70.87.020, 70.87.030, 70.87.034, 70.87.120, 70.87.185 and chapter 70.87 RCW. 01-02-026, § 296-96-14065, filed 12/22/00, effective 1/22/01.]

WAC 296-96-14070 Where must hoistway lights be located? Adequate lighting must be installed and operating at each landing and in the shaftway.

For purposes of this section "adequate lighting" means five-foot candles.

[Statutory Authority: RCW 70.87.020, 70.87.030, 70.87.034, 70.87.120, 70.87.185, 70.87.190, 2002 c 98, 2003 c 143 and 2004 c 66. 04-12-047, § 296-96-14070, filed 5/28/04, effective 6/30/04. Statutory Authority: RCW 70.87.020, 70.87.030, 70.87.034, 70.87.120, 70.87.185 and chapter 70.87 RCW. 01-02-026, § 296-96-14070, filed 12/22/00, effective 1/22/01.]

WAC 296-96-14075 What is the factor of safety for overhead supports? The overhead supporting members must be designed, based upon impact loads, with a safety factor of:

(1) Nine if wood; and

(2) Five if steel.

[Statutory Authority: RCW 70.87.020, 70.87.030, 70.87.034, 70.87.120, 70.87.185 and chapter 70.87 RCW. 01-02-026, § 296-96-14075, filed 12/22/00, effective 1/22/01.]

WAC 296-96-14080 What additional requirements apply to the installation and operation of hand powered manlifts? (1) Only employees and other authorized personnel may ride in a lift car.

(2) Escape ladders must be installed extending the full length of the hoistway and must be located in a position so that in an emergency a person can safely transfer from the car platform to the ladder. Transfer is considered safe when a person can maintain three points of contact while making the transfer. An "IMPAIRED CLEARANCE" sign must be posted at the bottom of a ladder when the face of the ladder is less than 30 inches from any structure.

(3) An automatic safety device which will prevent the car from leaving the landing until manually released by the operator must be installed at the bottom landing.

(4) A fire extinguisher in proper working condition must be available in the car.

(5) A five-year full load test must be performed and a tag indicating the date and the company conducting the test must be permanently attached with a wire and a seal. Documentation of the test submitted to the department. Manlifts with wooden rails must have a no-load drop test performed on the equipment.

Qualified people will conduct the test. A qualified person is either:

(a) An elevator mechanic licensed in the appropriate category for the conveyance being tested;

(b) The representative of a firm that manufactured the particular material lift and who holds a current temporary mechanic's license in this state; or

(c) The representative of a firm that manufactured the particular material lift who is working under the direct supervision of an elevator mechanic licensed in the appropriate category for the conveyance being tested.

(6) A no load annual safety test must be performed and a tag indicating the date and company conducting the test must be attached to the conveyance with a wire and seal. A safety tag must also be permanently affixed to the inside of the car.

[Statutory Authority: RCW 70.87.020, 70.87.030, 70.87.034, 70.87.120, 70.87.185, 70.87.190, 2002 c 98, 2003 c 143 and 2004 c 66. 04-12-047, § 296-96-14080, filed 5/28/04, effective 6/30/04. Statutory Authority: RCW 70.87.020, 70.87.030, 70.87.034, 70.87.120, 70.87.185 and chapter 70.87 RCW. 01-02-026, § 296-96-14080, filed 12/22/00, effective 1/22/01.]

Casket Lifts

WAC 296-96-16010 What is the scope of the department's casket lift regulations? (1) The rules in this section, WAC 296-96-16010 through 296-96-16240, apply to hoisting and lowering mechanisms equipped with cars that:

(a) Move within guides in a substantially vertical direction;

(b) Have a maximum net inside area of 28 square feet;

(c) Have a maximum total internal height of 4 feet and a maximum total internal width of 3 1/2 feet; and

(d) Utilize a series of rollers as a platform to exclusively carry caskets.

(2) A hoistway, hoistway enclosure, and related construction that are in substantial compliance with Part 1, Section 100 of the American Standard Safety Code for Elevators, Dumbwaiters, Escalators and Moving Walks A17.1 and meet the requirements of these casket lift rules.

[Statutory Authority: RCW 70.87.020, 70.87.030, 70.87.034, 70.87.120, 70.87.185 and chapter 70.87 RCW. 01-02-026, § 296-96-16010, filed 12/22/00, effective 1/22/01.]

WAC 296-96-16020 What requirements apply to the location and operation of machine rooms and machinery space? (1) Machines and control equipment can be located:

(a) Inside a hoistway enclosure, at the top or bottom, without enclosures or platforms; or

(b) Outside a hoistway if enclosed with a noncombustible material to a height of at least 6 feet.

(2) Machines and control equipment located outside the hoistway must be enclosed in enclosures of incombustible material not less than 6 feet high and have a self-closing and locking door. Control equipment located outside the hoistway may be enclosed in metal cabinet equipped with a self-closing and locking door to prevent access by unauthorized persons.

(3) Permanent electric lighting must be provided in all machine rooms and machinery spaces.

[Statutory Authority: RCW 70.87.020, 70.87.030, 70.87.034, 70.87.120, 70.87.185 and chapter 70.87 RCW. 01-02-026, § 296-96-16020, filed 12/22/00, effective 1/22/01.]

WAC 296-96-16030 What equipment can be located in a machine room? Only machinery and equipment required for the operation of the elevator is permitted in the elevator machine room.

[Statutory Authority: RCW 70.87.020, 70.87.030, 70.87.034, 70.87.120, 70.87.185 and chapter 70.87 RCW. 01-02-026, § 296-96-16030, filed 12/22/00, effective 1/22/01.]

WAC 296-96-16040 What requirements apply to the location of electrical wiring, pipes and ducts in hoistways and machine rooms? (1) Only electrical wiring raceways and cables directly related to an elevator's operation may be installed inside the hoistway.

(2) Pipes or ducts that convey gases, vapors, or liquids and are not used in connection with the elevator must not be installed in any hoistway, machine room, or machinery space.

(3) Machinery and sheave beams, supports, and foundations must comply with the American Standard Safety Code for Elevators, Dumbwaiters, Escalators and Moving Walks A17.1, Section 2.9.

[Statutory Authority: RCW 70.87.020, 70.87.030, 70.87.034, 70.87.120, 70.87.185, 70.87.190, 2002 c 98, 2003 c 143 and 2004 c 66. 04-12-047, § 296-96-16040, filed 5/28/04, effective 6/30/04. Statutory Authority: RCW 70.87.020, 70.87.030, 70.87.034, 70.87.120, 70.87.185 and chapter 70.87 RCW. 01-02-026, § 296-96-16040, filed 12/22/00, effective 1/22/01.]

WAC 296-96-16050 Is a pit required in a casket lift hoistway? A pit is not required in a casket lift hoistway.

[Statutory Authority: RCW 70.87.020, 70.87.030, 70.87.034, 70.87.120, 70.87.185 and chapter 70.87 RCW. 01-02-026, § 296-96-16050, filed 12/22/00, effective 1/22/01.]

WAC 296-96-16060 What requirements apply to the size and location of hoistway door openings? (1) The width and height of door openings must not exceed the width and height of the elevator car by more than one inch in each dimension; except one door opening may be of sufficient size to permit installing and removing the car, but must not be more than 4 feet 9 inches in height.

(2) The bottom of the door opening must be not less than 24 inches above the floor.

[Statutory Authority: RCW 70.87.020, 70.87.030, 70.87.034, 70.87.120, 70.87.185 and chapter 70.87 RCW. 01-02-026, § 296-96-16060, filed 12/22/00, effective 1/22/01.]

WAC 296-96-16070 How must hoistway doors be hung? Hoistway doors must be hung and guided in such a manner that the doors will not be displaced from the guides or tracks when in normal service nor when the doors are subjected to a constant horizontal force of 250 pounds applied at right angles to and approximately the center of the door or to the center of each door section where multisection doors are used.

[Statutory Authority: RCW 70.87.020, 70.87.030, 70.87.034, 70.87.120, 70.87.185 and chapter 70.87 RCW. 01-02-026, § 296-96-16070, filed 12/22/00, effective 1/22/01.]

WAC 296-96-16080 Where must hoistway doors be located? Hoistway doors must be located so that the distance from the hoistway face of the doors to the landing sill must not be more than 2 1/2 inches.

[Statutory Authority: RCW 70.87.020, 70.87.030, 70.87.034, 70.87.120, 70.87.185 and chapter 70.87 RCW. 01-02-026, § 296-96-16080, filed 12/22/00, effective 1/22/01.]

WAC 296-96-16090 What requirements apply to hoistway doors locks? All hoistway doors must be equipped with a combination mechanical lock and electric contact.

[Statutory Authority: RCW 70.87.020, 70.87.030, 70.87.034, 70.87.120, 70.87.185 and chapter 70.87 RCW. 01-02-026, § 296-96-16090, filed 12/22/00, effective 1/22/01.]

WAC 296-96-16100 How should space beneath a hoistway be protected? Where the space below the hoistway is used for a passageway or is occupied by a people, or if unoccupied is not secured against unauthorized access, the cars and counterweights must be equipped with safeties which may be operated as a result of the breaking of the suspension means. Safeties may be of the inertia type without governors.

[Statutory Authority: RCW 70.87.020, 70.87.030, 70.87.034, 70.87.120, 70.87.185 and chapter 70.87 RCW. 01-02-026, § 296-96-16100, filed 12/22/00, effective 1/22/01.]

WAC 296-96-16110 What requirements apply to car doors and gates? There must not be more than two entrances to the car.

(1) Each entrance must be provided with a car door or gate which when in a fully-closed position must protect the full width and height of the car entrance opening.

(2) Collapsible type gates, when in a fully closed position, must reject a 4 1/2 inch diameter ball.

[Statutory Authority: RCW 70.87.020, 70.87.030, 70.87.034, 70.87.120, 70.87.185 and chapter 70.87 RCW. 01-02-026, § 296-96-16110, filed 12/22/00, effective 1/22/01.]

WAC 296-96-16120 What requirements apply to car enclosures? (1) Elevator cars must be permanently enclosed on all sides and the top.

(2) The enclosure must be securely fastened to the car platform and so supported that it cannot loosen or become displaced in ordinary service.

(3) The enclosure walls must be of sufficient strength and designed and supported so that when subjected to a pressure of 75 pounds applied horizontally at any point on the walls of the enclosure, the deflection will not reduce the running clearance to exceed one inch.

(4) The top of the car enclosure must be designed and installed so as to be capable of sustaining a load of 300 pounds on any square area 2 feet on a side and 100 pounds applied at any point. Simultaneous application of these loads is not required.

[Statutory Authority: RCW 70.87.020, 70.87.030, 70.87.034, 70.87.120, 70.87.185 and chapter 70.87 RCW. 01-02-026, § 296-96-16120, filed 12/22/00, effective 1/22/01.]

WAC 296-96-16130 What requirements apply to the construction of car frames and platforms? (1) Every elevator suspended by wire ropes must have a car frame consisting of a crosshead, uprights (stiles), and a plank located approximately at the middle of the car platform and in no case farther from the middle than one-eighth of the distance from the front of the platform.

(2) Car frames must be guided on each guide rail by upper and lower guiding members attached to the frame.

(3) Car frames and outside members of the platform must be made of steel.

[Statutory Authority: RCW 70.87.020, 70.87.030, 70.87.034, 70.87.120, 70.87.185 and chapter 70.87 RCW. 01-02-026, § 296-96-16130, filed 12/22/00, effective 1/22/01.]

WAC 296-96-16140 How must car frames and platforms be connected? Connections between members of the car frames and platform must be riveted, bolted, or welded and must meet the following specifications:

(1) Bolts where used through sloping flanges of structural members must have boltheads of the tipped head type or must be fitted with beveled washers.

(2) Nuts used on sloping flanges of structural members must seat on beveled washers.

(3) Welding of parts upon which safe operation depends must be done in accordance with the appropriate standards established by the American Welding Society.

[Statutory Authority: RCW 70.87.020, 70.87.030, 70.87.034, 70.87.120, 70.87.185 and chapter 70.87 RCW. 01-02-026, § 296-96-16140, filed 12/22/00, effective 1/22/01.]

WAC 296-96-16150 What is the load capacity of a casket lift car? (1) Driving machines, car and counterweight suspension mechanisms, and overhead beams and supports must be able to sustain a car with a structural load capacity based upon its inside net platform area as shown in American Standard Safety Code for Elevators, Dumbwaiters, Escalators and Moving Walks A17.1, Table 216.1.

(2) A metal plate which gives the rated load in letters and figures not less than 1/4 inch high stamped, etched or raised on the surface of the plate must be fastened in a conspicuous place in the car.

[Statutory Authority: RCW 70.87.020, 70.87.030, 70.87.034, 70.87.120, 70.87.185, 70.87.190, 2002 c 98, 2003 c 143 and 2004 c 66. 04-12-047, § 296-96-16150, filed 5/28/04, effective 6/30/04. Statutory Authority: RCW 70.87.020, 70.87.030, 70.87.034, 70.87.120, 70.87.185 and chapter 70.87 RCW. 01-02-026, § 296-96-16150, filed 12/22/00, effective 1/22/01.]

WAC 296-96-16160 What types of casket lift driving machines are allowed? Only drum, traction or plunger type driving machines may be used.

[Statutory Authority: RCW 70.87.020, 70.87.030, 70.87.034, 70.87.120, 70.87.185 and chapter 70.87 RCW. 01-02-026, § 296-96-16160, filed 12/22/00, effective 1/22/01.]

WAC 296-96-16170 What material and grooving is required for sheaves and drums? Material and grooving for sheaves and drums must be of metal finished grooves and have a pitch diameter not less than 40 times the diameter of the rope.

[Statutory Authority: RCW 70.87.020, 70.87.030, 70.87.034, 70.87.120, 70.87.185 and chapter 70.87 RCW. 01-02-026, § 296-96-16170, filed 12/22/00, effective 1/22/01.]

WAC 296-96-16180 What types of brakes must be used on the driving machine? Elevator driving machines must be equipped with a friction brake applied by a spring or springs and released electrically. The brake must be designed to have a capacity sufficient to hold the car at rest with its rated load.

[Statutory Authority: RCW 70.87.020, 70.87.030, 70.87.034, 70.87.120, 70.87.185 and chapter 70.87 RCW. 01-02-026, § 296-96-16180, filed 12/22/00, effective 1/22/01.]

WAC 296-96-16190 Where must terminal stopping devices be located? (1) Upper and lower normal stopping devices must be provided at the top and bottom of the hoistway.

(2) Final terminal stopping devices must be provided and arranged to stop electric power to the elevator driving machine motor and brake after the car has passed a terminal landing but so that under normal operating conditions it will not function when the car is stopped by the normal terminal stopping device.

(3) Elevators having traction machines must have final terminal stopping switches located in the hoistway and operated by cams attached to the car.

(4) Elevators having winding-drum machines must have terminal stopping switches located on and operated by the driving machine, which must not be driven by chain, rope or belt. Also, stopping switches must be installed in the hoistway and operated by cams attached to the car or counterweights.

(5) All elevators having winding-drum machines must have a slack rope device with an electric switch of the enclosed manually reset type which will cause the electric power to be removed from the driving machine motor and brake if the hoisting ropes become slack.

[Statutory Authority: RCW 70.87.020, 70.87.030, 70.87.034, 70.87.120, 70.87.185 and chapter 70.87 RCW. 01-02-026, § 296-96-16190, filed 12/22/00, effective 1/22/01.]

WAC 296-96-16200 What are the specifications for casket lift ropes and rope connections? (1) Elevator cars and counterweights must be suspended by steel wire ropes. Only iron (low carbon steel) or steel wire ropes with fibre cores, having the commercial classification of "elevator wire rope" may be used for the suspension of elevator cars and for the suspension of counterweights.

(2) The minimum number of hoisting ropes is:

(a) Three 1/2 inch ropes for traction elevators; and

(b) Two 1/2 inch ropes for drum type elevators.

(3) Fastenings must be by individual tapered babbitted rope sockets or by other department-approved types.

(4) The rope sockets must be of a type which will develop at least 80 percent of the braking strength of the strongest rope to be used in such fastenings, and U-bolt type rope clips (clamps) must not be used for load line fastenings.

[Statutory Authority: RCW 70.87.020, 70.87.030, 70.87.034, 70.87.120, 70.87.185 and chapter 70.87 RCW. 01-02-026, § 296-96-16200, filed 12/22/00, effective 1/22/01.]

WAC 296-96-16210 What specific requirements apply to hydraulic elevators? (1) All hydraulic elevators must be a plunger type with the plunger securely attached to the car platform.

(2) Plungers composed of more than one section must have the joints designed and constructed to carry in tension the weight of all plunger sections below the joints.

(3) Plungers must be provided with solid metal stops to prevent the plunger from traveling beyond the limits of the cylinder. Stops must be designed and constructed so as to stop the plunger from maximum speed in the "up" direction under full pressure without damage to the hydraulic system.

(4) Any leaking hydraulic oil must be collected.

[Statutory Authority: RCW 70.87.020, 70.87.030, 70.87.034, 70.87.120, 70.87.185 and chapter 70.87 RCW. 01-02-026, § 296-96-16210, filed 12/22/00, effective 1/22/01.]

WAC 296-96-16220 What requirements apply to valves, supply piping, and fittings? (1) Valves, piping and fittings must not be subjected to working pressures that exceed manufacturer recommendations.

(2) Pipes, especially those that may vibrate, must be sufficiently supported at each joint and fitting so undue stress is eliminated.

(3) A shut-off valve must be installed in the pit.

(4) Each pump must be equipped with a relief valve and all relief valves must be:

(a) Located between the pump and check value in a bypass connection;

(b) A type that cannot be shut off from the hydraulic system; and

(c) Pre-set to open at a pressure not greater than 125 percent of the working pressure at the pump.

EXCEPTION: Relief valves are not required for centrifugal pumps driven by an induction motor when the shutoff or maximum pressure that the pump develops is no more than 135 percent of the working pressure at the pump.

(5) A check valve must be installed that will hold a car and its rated load at any point whenever a pump stops or pump operating pressure drops below the required minimum.

[Statutory Authority: RCW 70.87.020, 70.87.030, 70.87.034, 70.87.120, 70.87.185 and chapter 70.87 RCW. 01-02-026, § 296-96-16220, filed 12/22/00, effective 1/22/01.]

WAC 296-96-16230 What type of stopping devices must be installed? Normal stopping devices operated by cams attached to the car must be installed at the top and bot-

tom of the hoistway. Final terminal stopping devices and anticreep leveling devices are not required.

[Statutory Authority: RCW 70.87.020, 70.87.030, 70.87.034, 70.87.120, 70.87.185 and chapter 70.87 RCW. 01-02-026, § 296-96-16230, filed 12/22/00, effective 1/22/01.]

WAC 296-96-16240 What type of operating devices must be used? Only constant pressure or automatic type operating devices located outside the hoistway may be used.

[Statutory Authority: RCW 70.87.020, 70.87.030, 70.87.034, 70.87.120, 70.87.185 and chapter 70.87 RCW. 01-02-026, § 296-96-16240, filed 12/22/00, effective 1/22/01.]

Boat Launching Elevators

WAC 296-96-18010 What are the definitions for boat launching elevators? "Boat launching elevator" is a device that:

(1) Is equipped with a car or platform;

(2) Moves in guides in a substantially vertical direction;

(3) Serves to connect one or more floors or landings of a boat launching structure with a beach or water surface; and

(4) Is used for carrying or handling boats in which people ride.

"Boat launching structure" is any structure that houses and supports any boat launch elevator.

[Statutory Authority: RCW 70.87.020, 70.87.030, 70.87.034, 70.87.120, 70.87.185 and chapter 70.87 RCW. 01-02-026, § 296-96-18010, filed 12/22/00, effective 1/22/01.]

WAC 296-96-18020 Must boat launching elevator cars and platforms be enclosed? All boat launching elevator cars or platforms must be enclosed to a height of at least 6 feet from the floor on all sides where there are no hoistway doors or gates. Enclosures may be built as solid panels or open work which will reject a two inch diameter ball.

[Statutory Authority: RCW 70.87.020, 70.87.030, 70.87.034, 70.87.120, 70.87.185 and chapter 70.87 RCW. 01-02-026, § 296-96-18020, filed 12/22/00, effective 1/22/01.]

WAC 296-96-18030 What electrical wiring requirements apply to boat launching elevators? (1) All electric wiring used in boat launching elevators, except the traveling cable, must be enclosed in rigid metal conduit.

(2) The traveling cable, which is required between the car mounted terminal stopping switch and the hoistway, must be made of flexible, nonmetallic, moisture-retardant, flame-retardant material.

(3) All electrical outlets, switches, junction boxes and fittings used in boat launching elevators must be weather proof.

[Statutory Authority: RCW 70.87.020, 70.87.030, 70.87.034, 70.87.120, 70.87.185 and chapter 70.87 RCW. 01-02-026, § 296-96-18030, filed 12/22/00, effective 1/22/01.]

WAC 296-96-18040 What type of brakes must be used on boat launching elevators? All electric boat launching elevators must be equipped with effective brakes that are applied by springs and released electrically. Brake capacity must be sufficient to hold the elevator and its rated load at rest.

[Statutory Authority: RCW 70.87.020, 70.87.030, 70.87.034, 70.87.120, 70.87.185 and chapter 70.87 RCW. 01-02-026, § 296-96-18040, filed 12/22/00, effective 1/22/01.]

WAC 296-96-18050 What types of stop switches and protective devices are required on boat launching elevators? (1) All electric boat launching elevators must be equipped with:

(a) A bottom terminal stop switch operated by the traveling cable and a float or some other department approved mechanism;

(b) A top terminal stop switch that is located in the hoistway and is operated either by a cam attached to the car or some other department approved mechanism; and

(c) Key-operated, continuous pressure type operating switches that are located outside the hoistway but within sight of the elevator car or platform.

(2) All boat launching elevators operated by a winding drum, must be equipped with a final stop switch that is located on and operated directly by the driving machine. Chains, ropes or belts must not drive final stop switches.

(3) All boat launching elevators driven by a polyphase alternating current motor must be equipped with the following approved relays:

(a) A reverse phase relay that prevents the driving machine motor from starting when either the phase rotation is in the wrong direction or there is a phase failure; and

(b) A main line relay or contact that automatically stops power to the driving machine motor and brake, activating the brake when any safety device is activated.

(4) Hand rope controls must not be used on any boat launch elevator.

[Statutory Authority: RCW 70.87.020, 70.87.030, 70.87.034, 70.87.120, 70.87.185 and chapter 70.87 RCW. 01-02-026, § 296-96-18050, filed 12/22/00, effective 1/22/01.]

WAC 296-96-18060 When must hoisting cables be reshackled or refastened? The load end of a hoisting cable on all boat launching elevators must be reshackled or refastened every 12 months.

[Statutory Authority: RCW 70.87.020, 70.87.030, 70.87.034, 70.87.120, 70.87.185 and chapter 70.87 RCW. 01-02-026, § 296-96-18060, filed 12/22/00, effective 1/22/01.]

WAC 296-96-18070 What requirements apply to hoistway gates and doors? (1) All boat launching elevators must have gate-protected hoistway entrances at every landing except those landings located on the beach or at the water surface.

(2) All gates must comply with the following minimum requirements:

(a) There must be a full-bodied, balanced type safety gate that protects the full width of the hoistway and must hang, at all points along the gate, within two inches of the landing threshold;

(b) The minimum gate height on top landings is 42 inches and 66 inches on all intermediate landings;

(c) Gates must be constructed of either metal or wood;

(d) Gates must be capable of withstanding a lateral pressure, applied at any point, of 250 pounds without breaking,

becoming permanently deformed or being displaced from their guides or tracks;

(e) The openings in grille, lattice or other openwork designed gate bodies, must reject a two-inch diameter ball; and

(f) Gates must be equipped with a department approved combination electric contact and mechanical lock.

[Statutory Authority: RCW 70.87.020, 70.87.030, 70.87.034, 70.87.120, 70.87.185 and chapter 70.87 RCW. 01-02-026, § 296-96-18070, filed 12/22/00, effective 1/22/01.]

WAC 296-96-18080 Must boat launching elevator hoistways be enclosed? The sides of elevator hoistways adjacent to a dock area platform, walkway or ramp must be enclosed. The enclosures must comply with the hoistway safety gate dimension and pressure requirements in WAC 296-96-18070.

[Statutory Authority: RCW 70.87.020, 70.87.030, 70.87.034, 70.87.120, 70.87.185 and chapter 70.87 RCW. 01-02-026, § 296-96-18080, filed 12/22/00, effective 1/22/01.]

Mechanized Parking Garage Equipment

WAC 296-96-20005 What national safety codes has the department adopted for mechanized parking garage equipment? The department has adopted USASI Standard A113.1-1964 "Safety Code for Mechanized Parking Garage Equipment."

[Statutory Authority: RCW 70.87.020, 70.87.030, 70.87.034, 70.87.120, 70.87.185 and chapter 70.87 RCW. 01-02-026, § 296-96-20005, filed 12/22/00, effective 1/22/01.]

PART D - REGULATIONS FOR EXISTING ELEVATORS, DUMBWAITERS, AND ESCALATORS

Regulations for Existing Electric Elevators, Direct Plunger and Roped Hydraulic Elevators, Escalators used to transport passengers, Electric and Hand-powered Dumbwaiters, Hand-powered Elevators, Inclined Stairway Chairlifts, Inclined and Vertical Wheelchair Lifts, and Sidewalk Elevators

NOTE: The following rules set the minimum standard for existing elevators, dumbwaiters, and escalators, and, where applicable, alterations.

WAC 296-96-23100 Are keys required to be on-site? Yes. The keys to the machine room and the keys that are necessary to operate the elevator must be located in a locked key retainer box in the elevator lobby; or located by machine room doors at no more than six feet above the floor, provided access to the key box doesn't require passage through locked doors. The key retainer box must be:

• Readily accessible to authorized personnel;

• Clearly labeled "Elevator"; and

• Equipped with a 1-inch cylinder cam lock key #39504.

Further:

• Keys for access to elevator machine rooms and for operating elevator equipment must be tagged and kept in the key box.

• The key box must contain all keys necessary for inspections of the elevator.

• Mechanical hoistway access devices must be kept in the key box or machine room.

The department may approve existing retainer boxes provided they are:

• Readily accessible to authorized personnel;

• Clearly labeled "elevator"; and

• The lock must be either a 1-inch cylinder cam lock key #39504 or a combination lock. The combination for the lock must be on record with the department.

[Statutory Authority: RCW 70.87.020, 70.87.030, 70.87.034, 70.87.120, 70.87.185, 70.87.190, 2002 c 98, 2003 c 143 and 2004 c 66. 04-12-047, § 296-96-23100, filed 5/28/04, effective 6/30/04. Statutory Authority: RCW 70.87.020, 70.87.030, 70.87.034, 70.87.120, 70.87.185 and chapter 70.87 RCW. 01-02-026, § 296-96-23100, filed 12/22/00, effective 1/22/01.]

Subpart I
Hoistways and Related Construction for Electric and Hydraulic Elevators

WAC 296-96-23101 What is the scope of Subpart I? (1) Subpart I, Hoistways and Related Construction for Electric and Hydraulic Elevators, is the minimum standard for all existing hydraulic and electric elevators. It applies to other equipment only as referenced in the applicable part.

(2) This subpart does not apply to elevators located in grain terminals, residential elevators, or special purpose elevators.

[Statutory Authority: RCW 70.87.020, 70.87.030, 70.87.034, 70.87.120, 70.87.185, 70.87.190, 2002 c 98, 2003 c 143 and 2004 c 66. 04-12-047, § 296-96-23101, filed 5/28/04, effective 6/30/04. Statutory Authority: RCW 70.87.020, 70.87.030, 70.87.034, 70.87.120, 70.87.185 and chapter 70.87 RCW. 01-02-026, § 296-96-23101, filed 12/22/00, effective 1/22/01.]

Section 1
Hoistways

WAC 296-96-23110 What structural requirements apply to hoistway enclosures? (1) Local laws and ordinances establish fire-resistant requirements for hoistway enclosures.

(2) When doors and hoistway enclosures are not required to be fire resistant, the hoistway must be enclosed:

(a) With a solid material or a material with openings that will reject a 1/2 inch diameter ball; and

(b) To a height at least 6 feet above each floor or landing and any adjacent stairways treads.

(3) Hoistway enclosures must be supported and braced so as to deflect no more than one inch when subjected to a 100 pound force perpendicularly applied at any point.

(4) Hoistway enclosures adjacent to counterweights must extend the full height of the floor and 6 inches past the counterweight raceway.

[Statutory Authority: RCW 70.87.020, 70.87.030, 70.87.034, 70.87.120, 70.87.185 and chapter 70.87 RCW. 01-02-026, § 296-96-23110, filed 12/22/00, effective 1/22/01.]

WAC 296-96-23111 Are guards required for windows in hoistway enclosures? (1) Guards are required on outside hoistway windows if the windows are located:

(a) Ten stories or less above a thoroughfare; or

(b) Three stories or less above the roof of an adjacent building.

(2) Hoistway windows can be guarded by one of the following methods:

(a) By vertical bars at least 5/8 inch in diameter or equivalent, spaced no more than 10 inches apart, permanently and securely fastened in place; and

(b) By metal-sash windows having solid section steel muntins of no less than 1/8 inch thickness, spaced no more than 8 inches apart.

(3) Exterior hoistway windows must be identified with 4-inch high letters marked "elevator."

[Statutory Authority: RCW 70.87.020, 70.87.030, 70.87.034, 70.87.120, 70.87.185 and chapter 70.87 RCW. 01-02-026, § 296-96-23111, filed 12/22/00, effective 1/22/01.]

WAC 296-96-23113 What are the requirements for pipes in hoistways that convey gases, vapors, or liquids? (1) All steam and hot water pipes in a hoistway must be covered to prevent direct spray onto the elevator car if ruptured, as required in ASME A17.1, Rule 102.2.

(2) All other pipes or ducts currently in a hoistway must be securely fastened to prevent excessive vibration.

(3) Future pipes or ducts must not be installed in a hoistway unless they directly pertain to the elevator's operation.

[Statutory Authority: RCW 70.87.020, 70.87.030, 70.87.034, 70.87.120, 70.87.185 and chapter 70.87 RCW. 01-02-026, § 296-96-23113, filed 12/22/00, effective 1/22/01.]

WAC 296-96-23115 What safety requirements apply to inspecting and maintaining overhead sheaves? (1) Overhead sheave spaces requiring inspection and maintenance must be located so adequate access and decking is available to insure the safety of inspection and maintenance personnel.

(2) Guardrails must be installed where decking does not cover the complete hoistway.

(3) Guardrail and deck supports must be similar to those required for the top of an elevator car and may be made of either wood or metal compatible with the existing hoistway construction.

(4) Inspections and maintenance may be performed from the top of an elevator car if a ladder is not required to perform these functions.

[Statutory Authority: RCW 70.87.020, 70.87.030, 70.87.034, 70.87.120, 70.87.185 and chapter 70.87 RCW. 01-02-026, § 296-96-23115, filed 12/22/00, effective 1/22/01.]

WAC 296-96-23116 What requirements apply to car numbers? In any building with more than one elevator, numbers at least two inches in height identifying each car must be located at the main lobby entrance, inside the car, on the machine, and on the disconnect switch.

[Statutory Authority: RCW 70.87.020, 70.87.030, 70.87.034, 70.87.120, 70.87.185 and chapter 70.87 RCW. 01-02-026, § 296-96-23116, filed 12/22/00, effective 1/22/01.]

WAC 296-96-23117 What requirements apply to top of car railings for traction elevators? A standard railing must be installed on the top of all traction elevators where the perpendicular distance between the edges of the car top and the adjacent hoistway enclosure exceeds twelve inches horizontal clearance. The railing shall be substantially constructed of metal and shall consist of a top rail, intermediate rail and post. The top rail shall have a smooth surface and the upper surface shall be located at a vertical height of forty-two inches. The intermediate rail shall be located approximately halfway between the top rail and the car top. There must be a minimum of six inches of clearance above the top rail when the car is at its furthest point of travel on inspection mode.

[Statutory Authority: RCW 70.87.020, 70.87.030, 70.87.034, 70.87.120, 70.87.185, 70.87.190, 2002 c 98, 2003 c 143 and 2004 c 66. 04-12-047, § 296-96-23117, filed 5/28/04, effective 6/30/04.]

WAC 296-96-23118 What requirements apply to top of car railings for hydraulic elevators in unenclosed hoistways? A standard railing must be installed on the top of hydraulic elevators installed in unenclosed hoistways. The railing shall be substantially constructed of metal and shall consist of a top rail, intermediate rail and post. The top rail shall have a smooth surface and, where practical, the upper surface shall be located at a vertical height of forty-two inches. The intermediate rail shall be located approximately halfway between the top rail and the car top. There must be a minimum of six inches of clearance above the top rail when the car is at its furthest point of travel on inspection mode.

[Statutory Authority: RCW 70.87.020, 70.87.030, 70.87.034, 70.87.120, 70.87.185, 70.87.190, 2002 c 98, 2003 c 143 and 2004 c 66. 04-12-047, § 296-96-23118, filed 5/28/04, effective 6/30/04.]

WAC 296-96-23119 What signage requirements apply to traction elevators with minimal overhead clearance? Traction elevators that do not have a minimum of twenty-four inches of clearance from the crosshead, or any equipment mounted on the crosshead, to the lowest member of the overhead structure in the hoistway when the car has reached its maximum upward movement must have signage. A sign must be located near the top of car inspection station. An additional sign must be posted on the hoistway wall. This sign must be visible when accessing the car top. The sign shall consist of alternating four-inch diagonal red and white stripes and must clearly state "danger low clearance" in lettering not less than four inches in height.

[Statutory Authority: RCW 70.87.020, 70.87.030, 70.87.034, 70.87.120, 70.87.185, 70.87.190, 2002 c 98, 2003 c 143 and 2004 c 66. 04-12-047, § 296-96-23119, filed 5/28/04, effective 6/30/04.]

Section 2
Machine Rooms and Machinery Spaces

WAC 296-96-23121 What are the requirements for machine room and machinery space access? Access doors to machine rooms and machinery spaces must be kept closed and locked. The lock must be a spring type which is installed to permit the door to be opened from the inside without a key.

[Statutory Authority: RCW 70.87.020, 70.87.030, 70.87.034, 70.87.120, 70.87.185 and chapter 70.87 RCW. 01-02-026, § 296-96-23121, filed 12/22/00, effective 1/22/01.]

WAC 296-96-23122 What type of lighting must be installed in machine rooms and machinery space? Permanent electric lighting must be provided in all machine rooms and machinery spaces. The illumination must be at least 10 foot-candles at floor level.

[Statutory Authority: RCW 70.87.020, 70.87.030, 70.87.034, 70.87.120, 70.87.185 and chapter 70.87 RCW. 01-02-026, § 296-96-23122, filed 12/22/00, effective 1/22/01.]

WAC 296-96-23123 What type of service outlets must be installed in elevator cars, hoistways and machinery spaces? Service outlets, where provided, must be permanently grounded.

[Statutory Authority: RCW 70.87.020, 70.87.030, 70.87.034, 70.87.120, 70.87.185 and chapter 70.87 RCW. 01-02-026, § 296-96-23123, filed 12/22/00, effective 1/22/01.]

WAC 296-96-23124 What installation requirements apply to pipes conveying gases, vapors, or liquids in machine rooms and machinery spaces? (1) All pipes or ducts currently in machine rooms and machinery spaces must be securely fastened to prevent excessive vibration.

(2) Future pipes or ducts must not be installed in machine rooms and machinery spaces.

[Statutory Authority: RCW 70.87.020, 70.87.030, 70.87.034, 70.87.120, 70.87.185 and chapter 70.87 RCW. 01-02-026, § 296-96-23124, filed 12/22/00, effective 1/22/01.]

WAC 296-96-23125 Must elevator machines and control equipment be protected from the weather? Elevator machines and control equipment must be protected from the weather.

[Statutory Authority: RCW 70.87.020, 70.87.030, 70.87.034, 70.87.120, 70.87.185 and chapter 70.87 RCW. 01-02-026, § 296-96-23125, filed 12/22/00, effective 1/22/01.]

WAC 296-96-23126 What protective measures should be taken in hoistways, machine rooms and machinery spaces to insure safety? (1) Gears, sprockets, sheaves, cables, tapes, belts and chains must be fitted with suitable guards to prevent accidental contact, where feasible.

(2) Openings in machine room floors above the hoistway must be guarded to prevent tools from falling into the hoistway below.

(3) Ventilation grids where exposed to the hoistway below must be firmly bolted or secured to prevent accidental removal and must be fitted with 1/2 inch wire mesh under the grid.

[Statutory Authority: RCW 70.87.020, 70.87.030, 70.87.034, 70.87.120, 70.87.185 and chapter 70.87 RCW. 01-02-026, § 296-96-23126, filed 12/22/00, effective 1/22/01.]

Section 3
Pits

WAC 296-96-23130 What requirements apply to pit access? (1) Pits must be accessible to all authorized personnel.

(2) Access doors, if provided, must be kept closed and locked.

(3) Access ladders must be installed in elevator pits 3 feet or deeper.

[Statutory Authority: RCW 70.87.020, 70.87.030, 70.87.034, 70.87.120, 70.87.185 and chapter 70.87 RCW. 01-02-026, § 296-96-23130, filed 12/22/00, effective 1/22/01.]

WAC 296-96-23131 What requirements apply to pit drains? (1) Pit drains directly connected to sewers are prohibited.

(2) Sumps, with or without pumps, are permitted.

[Statutory Authority: RCW 70.87.020, 70.87.030, 70.87.034, 70.87.120, 70.87.185 and chapter 70.87 RCW. 01-02-026, § 296-96-23131, filed 12/22/00, effective 1/22/01.]

WAC 296-96-23132 What lighting requirements apply to pits? (1) A permanent lighting fixture producing at least 5 foot-candle at the pit floor must be installed in all pits.

(2) A light switch must be installed and must be accessible from the pit access door.

(3) A permanent grounded outlet must be provided in all pits.

[Statutory Authority: RCW 70.87.020, 70.87.030, 70.87.034, 70.87.120, 70.87.185 and chapter 70.87 RCW. 01-02-026, § 296-96-23132, filed 12/22/00, effective 1/22/01.]

WAC 296-96-23133 What requirements apply to counterweight pit guards? (1) Where feasible, unperforated metal guards must be installed in the pit on the open side or sides on all counterweights where spring or solid-type buffers are used or where oil buffers attached to the counterweights are used. Except, where compensating chairs or ropes are attached to the counterweight the guard may be omitted on the side facing the car to which the chains or ropes are attached.

(2) Guards must extend from a point no more than 12 inches above the pit floor to a point at least 7 feet but not more than 8 feet above the floor; and be fastened to a properly reinforced and braced metal frame that is at least equal in strength and stiffness to No. 14 U.S. gauge sheet steel.

[Statutory Authority: RCW 70.87.020, 70.87.030, 70.87.034, 70.87.120, 70.87.185 and chapter 70.87 RCW. 01-02-026, § 296-96-23133, filed 12/22/00, effective 1/22/01.]

Section 4
Protection of Space Below Hoistways

WAC 296-96-23140 What requirements apply to any space below a hoistway that is not permanently protected from access? When space below a hoistway is not permanently protected from access, the following requirements apply:

(1) Counterweights must be equipped with safeties.

(2) The cars and counterweight must be equipped with spring or oil buffers.

(3) The car and counterweight buffer supports must be sufficiently strong to withstand without permanent deformation contact with buffers traveling at the following speeds:

(a) The governor tripping speed where the safety is governor operated; or

(b) 125 percent of the rated speed when the safety is not operated by a governor.

[Statutory Authority: RCW 70.87.020, 70.87.030, 70.87.034, 70.87.120, 70.87.185 and chapter 70.87 RCW. 01-02-026, § 296-96-23140, filed 12/22/00, effective 1/22/01.]

Section 5
Hoistway Entrances

WAC 296-96-23150 Are hoistway doors (gates) required? (1) Passenger elevators. Hoistway landing openings must have entrances which guard the full width and height of the openings. The panels of entrances used with automatic-operation passenger elevators must not have hand latches or other hand operated door fastening devices, nor must such panels

(2) Freight elevators. Hoistway landing openings for freight elevators must have entrances which guard the full width of the opening. Gates and doors must meet the following requirements:

(a) Balanced type vertically sliding hoistway gates must extend from a point not more than 2 inches from the landing threshold to a point at least 66 inches above the threshold.

(b) Gates must be solid or openwork of a design that will reject a 2 inch diameter ball and be located so that the distance from the hoistway face of the gate to the hoistway edge of the landing sill is no more than 2 1/2 inches.

(c) Gates must be constructed of metal or wood and be designed and guided so as to withstand a lateral pressure of 100 pounds applied at approximately the center without breaking or becoming permanently deformed and without displacing the gate from its guides or tracks.

(d) At the top landing, a gate 66 inches high may be used if there is not sufficient clearance for a 6 feet high gate. When the requirements of WAC 296-96-23110 allow nonfire-resistive hoistway enclosures, a gate may be used.

(e) Gates must be constructed of either metal or wood.

(f) Gates must withstand a lateral pressure of 100 pounds, applied at approximately their center, without breaking, being permanently deformed or being displaced from their guides or tracks.

(g) The maximum vertical opening between a landing sill and a door or gate is 2 inches.

(h) The distance between the gate's hoistway face and the hoistway landing edge must not exceed 2 1/2 inches.

[Statutory Authority: RCW 70.87.020, 70.87.030, 70.87.034, 70.87.120, 70.87.185 and chapter 70.87 RCW. 01-02-026, § 296-96-23150, filed 12/22/00, effective 1/22/01.]

WAC 296-96-23151 What requirements apply to hoistway door closing devices? (1) Horizontally sliding doors on automatic-operation elevators must be equipped with door closers that automatically close an open door if the car for any reason leaves the landing zone.

(2) Horizontal swinging single or center-opening doors on automatic-operation elevators must be self-closing.

(3) Door closers are not required for the swinging portion of combination horizontally sliding and swinging doors.

(4) On center-opening doors that utilize relating cables if the cabling fails or when the cabling is replaced a method shall be provided to ensure that both doors automatically close if the car for any reason leaves the landing zone.

[Statutory Authority: RCW 70.87.020, 70.87.030, 70.87.034, 70.87.120, 70.87.185, 70.87.190, 2002 c 98, 2003 c 143 and 2004 c 66. 04-12-047, § 296-96-23151, filed 5/28/04, effective 6/30/04. Statutory Authority: RCW 70.87.020, 70.87.030, 70.87.034, 70.87.120, 70.87.185 and chapter 70.87 RCW. 01-02-026, § 296-96-23151, filed 12/22/00, effective 1/22/01.]

WAC 296-96-23152 What requirements apply to hoistway door vision panels? (1) Manually operated or self-closing hoistway doors of the vertically or horizontally sliding type for elevators with automatic or continuous-pressure operation must be provided with a vision panel except at landings of automatic-operation elevators where a hall position indicator is provided.

(2) In multisection doors, the vision panel is required in one section only but may be placed in all sections.

(3) All horizontally swing doors must have vision panels.

(4) Vision panels may be provided in any type of hoistway door regardless of the type of operation of the elevator. Where provided, vision panels must meet the following requirements:

(a) The area of any single vision panel must be at least 25 square inches with the total area of one or more panels in any hoistway door not exceeding 80 square inches.

(b) Each clear panel opening must reject a 6 inch diameter ball.

(c) Muntins between panel sections must be made of a noncombustible material and of substantial construction. If located on the landing side, they must be flush with the surface of the landing side of the door.

(d) Panel openings must be glazed with clear wire glass at least 1/4 inch thick.

(e) A panel's center must be located at least 54 inches but no more than 66 inches above the landing except, for vertically sliding, biparting, counterbalanced doors it must be located to conform with the dimensions specified to the extent that the door design will permit.

(f) Vision panels in horizontally swing doors must be located for convenient vision when opening the door from the car side.

(g) Wire-glass panels in power-operated doors must be substantially flush with the surface of the landing side of the door.

(h) Vision panel frames must be secured by means of nonreversible screws or other tamper proof fasteners.

(i) Vision panels which do not meet the requirements of (a) through (h) of this section must be protected by protective grilles made of No. 15 gauge stainless or galvanized steel in accordance with the following specifications:

(i) Grilles must be sized to fit within or over the vision panel frame and completely cover the vision panel opening in the hoistway door.

(ii) Grilles must be secured by means of nonreversible screws or other tamper proof fasteners.

(iii) Grilles must contain openings which are no larger than 3 inches by 3/4 inch, or 3 inches in diameter.

(iv) All edges must be beveled and free of burrs.

(v) Grilles must be installed on the hoistway side of the door.

[Statutory Authority: RCW 70.87.020, 70.87.030, 70.87.034, 70.87.120, 70.87.185 and chapter 70.87 RCW. 01-02-026, § 296-96-23152, filed 12/22/00, effective 1/22/01.]

WAC 296-96-23153 What requirements apply to door hangers for horizontal slide doors? Door hangers for horizontal slide type entrances must meet the following requirements:

(1) Means must be provided to prevent the hangers from jumping the track.

(2) Stops must be provided in the entrance assembly to prevent hangers from overrunning the end of the track.

(3) Power-operated doors must be built to withstand, without damage or appreciable deflection, an imposed static load equal to four times the weight of each panel. This static load must be applied successively downward and upward along the vertical centerline of the panel.

[Statutory Authority: RCW 70.87.020, 70.87.030, 70.87.034, 70.87.120, 70.87.185 and chapter 70.87 RCW. 01-02-026, § 296-96-23153, filed 12/22/00, effective 1/22/01.]

WAC 296-96-23154 Are astragals required? On a vertically sliding, biparting, counterbalanced hoistway door, a fire-resistive, nonshearing and noncrushing member of either the meeting or overlapping type must be provided on the upper panel to close the distance between the rigid door sections when in contact with the stops. Rigid members which overlap the meeting edge and center-latching devices are prohibited.

[Statutory Authority: RCW 70.87.020, 70.87.030, 70.87.034, 70.87.120, 70.87.185 and chapter 70.87 RCW. 01-02-026, § 296-96-23154, filed 12/22/00, effective 1/22/01.]

WAC 296-96-23155 What requirements apply to pull straps? Manually operated, vertical slide, biparting elevators doors which can be operated from the landings must be provided with pull straps on the inside and outside of the upper panel where the lower edge of the upper panel is more than 6 feet 6 inches above the landing when the panel is in the fully open position. The length of the pull straps must be as follows:

(1) The bottom of the strap must be not more than 6 feet 6 inches above the landing when the panel is in the fully opened position.

(2) The length of the strap must not be extended by means of ropes or other materials.

(3) Where pull straps are provided on the car side of doors of elevators which can be operated from the car only, the length of the pull straps must conform to the requirements specified in (1) and (2) of this section.

[Statutory Authority: RCW 70.87.020, 70.87.030, 70.87.034, 70.87.120, 70.87.185 and chapter 70.87 RCW. 01-02-026, § 296-96-23155, filed 12/22/00, effective 1/22/01.]

WAC 296-96-23156 What requirements apply to landing sill clearances? The clearance between the car-platform sill and the hoistway edge of any landing sill, or the hoistway side of any vertically sliding counterweighted, or of any vertically sliding counterbalanced biparting hoistway door, must be:

(1) At least 1/2 inch where side car guides are used.

(2) At least 3/4 inch where corner car guides are used.

(3) In all cases, the maximum clearance must not be more than 1 1/2 inch.

[Statutory Authority: RCW 70.87.020, 70.87.030, 70.87.034, 70.87.120, 70.87.185 and chapter 70.87 RCW. 01-02-026, § 296-96-23156, filed 12/22/00, effective 1/22/01.]

WAC 296-96-23157 What is the maximum allowable threshold clearance? The maximum distance from the hoistway door or gate face to the hoistway edge of the threshold must not exceed 2 1/4 inches.

[Statutory Authority: RCW 70.87.020, 70.87.030, 70.87.034, 70.87.120, 70.87.185 and chapter 70.87 RCW. 01-02-026, § 296-96-23157, filed 12/22/00, effective 1/22/01.]

WAC 296-96-23158 What requirements apply to elevator floor numbers? Elevator hoistways must have floor numbers at least 4 inches high and placed on the walls and/or doors of hoistways at intervals so that a person in a stalled elevator, upon opening the car door 4 inches, could determine the floor position.

[Statutory Authority: RCW 70.87.020, 70.87.030, 70.87.034, 70.87.120, 70.87.185 and chapter 70.87 RCW. 01-02-026, § 296-96-23158, filed 12/22/00, effective 1/22/01.]

Section 6
Hoistway Door Locking Devices, Parking Devices, and Access

WAC 296-96-23160 What requirements apply to hoistway door (gate) locking devices? (1) Passenger elevator hoistway doors or gates must be equipped with hoistway-unit system door interlocks.

(2) Freight elevator hoistway doors or gates must be equipped with hoistway-unit system door interlocks or an approved type combination electric contact and mechanical lock.

(3) Combination locks and electric contacts or interlocks must be located so not to be accessible from the landing side when the hoistway doors or gates are closed.

[Statutory Authority: RCW 70.87.020, 70.87.030, 70.87.034, 70.87.120, 70.87.185 and chapter 70.87 RCW. 01-02-026, § 296-96-23160, filed 12/22/00, effective 1/22/01.]

WAC 296-96-23161 What requirements apply to elevator parking devices? (1) Elevators that are operated from within the car only must have elevator parking devices installed at every landing that is equipped with an unlocking device.

(2) On elevators that are not operated from within the car only, a parking device must be provided at one landing and may be provided at other landings. This device must be located at a height no greater than 6 feet 11 inches above the floor.

(3) Parking devices are not required for elevators with hoistway doors that automatically unlock when the car is within the landing zone.

(4) Parking devices must conform to the following specifications:

(a) They must be mechanically or electrically operated.

(b) They must be designed and installed so that friction or sticking or the breaking of any springs used in the device will not permit opening or unlocking a door when the car is outside the landing zone of that floor.

(c) Where springs are used, they must be of the restrained compression type which will prevent separation of the parts in case a spring breaks.

[Statutory Authority: RCW 70.87.020, 70.87.030, 70.87.034, 70.87.120, 70.87.185 and chapter 70.87 RCW. 01-02-026, § 296-96-23161, filed 12/22/00, effective 1/22/01.]

WAC 296-96-23162 What requirements apply to hoistway door unlocking devices? Hoistway door unlocking devices or hoistway access switches must be provided on all elevators at one upper landing to permit access to the top of the car and at the lowest landing if this landing is the normal point of access to the pit. Hoistway door unlocking devices may be provided at all landings for emergency use.

(1) Hoistway door unlocking devices must conform to the following specifications:

(a) The device must unlock and permit the opening of the hoistway door from the access landing regardless of the position of the car.

(b) The device must be designed to prevent unlocking the door with common tools.

(c) The operating means for unlocking the door must be available to and used only by inspectors, elevator maintenance and repair personnel, and qualified emergency personnel.

(d) The unlocking-device keyway must be located at a height no greater than 6 feet 11 inches above the floor.

(2) Hoistway access switches must conform to the following specifications:

(a) The switch must be installed only at the access landings.

(b) The switch must be installed adjacent to the hoistway entrance at the access landing with which it is identified.

(c) The switch must be of the continuous-pressure spring-return type and must be operated by a cylinder-type lock having not less than five-pin or five-disk combination with the key removable only when the switch is in the "off" position. The lock must not be operable by any key which will operate locks or devices used for other purposes in the building. The key or combination must be available to and used only by inspectors and elevator maintenance and repair personnel.

(d) The operation of the switch at either access landing must permit and may initiate and maintain movement of the car with the hoistway door at this landing unlocked or not in the closed position, and with the car door or gate not in the closed position, subject to the following:

(i) The operation of the switch must not render ineffective the hoistway door interlock or electric contact at any other landing.

(ii) The can must not be operated at a speed greater than 150 feet per minute.

(iii) For automatic and continuous-pressure operation elevators: Landing operating devices of continuous-pressure operation elevators and car and landing operating devices of automatic operation elevators must first be made inoperative by means other than the access switch; and power operation of the hoistway door and/or car door or gate is inoperative.

(iv) Automatic operation by a car-leveling device is inoperative.

(v) The top-of-car operating device is inoperative.

(vi) The movement of the car initiated and maintained by the upper access switch must be limited in the down direction to a travel not greater than the height of the car crosshead above the car platform, and limited in the up direction above the upper access landing to the distance the car apron extends below the car platform. Where electrically operated switches, relays, or contractors are used to render inoperative the hoistway-door interlock or electric contact or the car door or gate electric contact, the control circuits must be arranged to conform to the requirements of WAC 296-96-23221 and in addition, to render the normal car and hall operation ineffective in any such switch, relay, or contractor fails to function in the intended manner.

[Statutory Authority: RCW 70.87.020, 70.87.030, 70.87.034, 70.87.120, 70.87.185 and chapter 70.87 RCW. 01-02-026, § 296-96-23162, filed 12/22/00, effective 1/22/01.]

Section 7
Power Operation of Doors and Gates

WAC 296-96-23165 What requirements apply to reopening devices for power-operated car doors and gates? (1) A power-operated car door or gate must have a reopening device that stops and reopens the door or gate and the adjacent hoistway door if the car door or gate is obstructed while closing. If the closing kinetic energy is reduced to 2 1/2 feet-lbf or less, the reopening device may be rendered inoperative.

(2) For center opening doors or gates, the reopening device must be designed and installed so that obstruction of either door or gate panel when closing will cause the reopening device to function.

[Statutory Authority: RCW 70.87.020, 70.87.030, 70.87.034, 70.87.120, 70.87.185 and chapter 70.87 RCW. 01-02-026, § 296-96-23165, filed 12/22/00, effective 1/22/01.]

WAC 296-96-23166 What requirements apply to photo electric or electric eye door reopening devices? An elevator equipped with a photo electric or electric eye device for reopening of the car and hoistway doors must be provided with a means that will automatically time-out and close the door if it has been obstructed for 20 seconds. The photo electric or electric eye device must not be reactivated until the doors have fully closed. There are two exceptions to this requirement:

(1) The department may authorize hospitals or nursing homes to allow obstructed doors to close within 35 seconds after the expiration of the normal door open time.

(2) When smoke detectors are used to bypass photo electric or electric eye devices the doors are not required to time-out and close except under phase I conditions as authorized by ANSI A17.1-211.3A.

[Statutory Authority: RCW 70.87.020, 70.87.030, 70.87.034, 70.87.120, 70.87.185 and chapter 70.87 RCW. 01-02-026, § 296-96-23166, filed 12/22/00, effective 1/22/01.]

Subpart II
Machinery and Equipment for Electric Elevators

WAC 296-96-23200 What is the scope of Subpart II? Subpart II, Machinery and Equipment for Electric Elevators, is a minimum standard for all existing electric elevators. It applies to other equipment only as referenced in the applicable Subpart.

[Statutory Authority: RCW 70.87.020, 70.87.030, 70.87.034, 70.87.120, 70.87.185 and chapter 70.87 RCW. 01-02-026, § 296-96-23200, filed 12/22/00, effective 1/22/01.]

Section 1
Buffers and Bumpers

WAC 296-96-23203 What requirements apply to buffers and bumpers? Car and counterweight buffers or bumpers must be provided. Solid bumpers may be used in lieu of buffers where:

(1) The rated speed is 50 feet per minute or less; or

(2) Type C safeties are used.

[Statutory Authority: RCW 70.87.020, 70.87.030, 70.87.034, 70.87.120, 70.87.185 and chapter 70.87 RCW. 01-02-026, § 296-96-23203, filed 12/22/00, effective 1/22/01.]

Section 2
Counterweights

WAC 296-96-23205 What requirements apply to counterweights? On rod type counterweights, the rod nuts must be cotter-pinned and the tie rods must be protected so that the head weight cannot crush the tie rods on buffer engagement.

(1) The weights must be protected so that they cannot be dislodged.

(2) Compensating chains or ropes must be fastened to the counterweight from directly or to a bracket fastened to the frame and must not be fastened to the tie rods.

[Statutory Authority: RCW 70.87.020, 70.87.030, 70.87.034, 70.87.120, 70.87.185 and chapter 70.87 RCW. 01-02-026, § 296-96-23205, filed 12/22/00, effective 1/22/01.]

Section 3
Car Frames and Platforms

WAC 296-96-23206 What requirements apply to car platforms and frames? Every elevator car must have a platform consisting of a nonperforated floor attached to a platform frame supported by the car frame and extending over the entire area within the car enclosure.

(1) Holes in the floor for the safety plank wrench, etc., must be covered and secured.

(2) The platform frame members and the floor must be designed to withstand the forces developed under the loading conditions for which the elevator is designed and installed.

[Statutory Authority: RCW 70.87.020, 70.87.030, 70.87.034, 70.87.120, 70.87.185 and chapter 70.87 RCW. 01-02-026, § 296-96-23206, filed 12/22/00, effective 1/22/01.]

WAC 296-96-23207 What requirements apply to platform guards (aprons)? The entrance side of the platform of passenger and freight elevators equipped with leveling devices or truck-zoning devices must have smooth metal guard plates of not less than 0.0598 inch thick steel, or material of equivalent strength and stiffness, adequately reinforced and braced to the car platform and conforming to the following:

(1) The guard plate must extend no less than the full width of the widest hoistway door opening.

(2) It must have a straight vertical face, extending below the floor surface of the platform, of no less than the depth of the leveling of truck zone, plus 3 inches.

(3) If new guards are installed, the lower portion of the guard must be bent back at an angle of not less than 60 degrees nor more than 75 degrees from the horizontal.

(4) The guard plate must be securely braced and fastened in place to withstand a constant force of not less than 15-lbf applied at right angles to and at any position on its face without permanent deformation.

[Statutory Authority: RCW 70.87.020, 70.87.030, 70.87.034, 70.87.120, 70.87.185 and chapter 70.87 RCW. 01-02-026, § 296-96-23207, filed 12/22/00, effective 1/22/01.]

WAC 296-96-23208 What requirements apply to hinged platform sills? Hinged platform sills, where provided, must have electric contacts which will prevent operation of the elevator by the normal operating device unless the hinged sill is within 2 inches of its fully retracted position. The elevator may be operated by the leveling device in the leveling zone with the sill in any position.

[Statutory Authority: RCW 70.87.020, 70.87.030, 70.87.034, 70.87.120, 70.87.185 and chapter 70.87 RCW. 01-02-026, § 296-96-23208, filed 12/22/00, effective 1/22/01.]

WAC 296-96-23209 What requirements apply to floating (movable) platforms? Floating (movable) platforms which permit operation of the elevator when the car door or gate is not in the closed position are prohibited.

[Statutory Authority: RCW 70.87.020, 70.87.030, 70.87.034, 70.87.120, 70.87.185 and chapter 70.87 RCW. 01-02-026, § 296-96-23209, filed 12/22/00, effective 1/22/01.]

Section 4
Car Enclosures

WAC 296-96-23215 What requirements apply to car enclosures? Car enclosures for freight and passenger cars must meet the following specifications:

(1) Freight elevator cars:

(a) Cars must be enclosed to a height of at least 6 feet from the floor on the sides where there are no hoistway doors or gates with solid panel or openwork which will reject a 2 inch diameter ball.

(b) On the side of the car adjacent to the counterweight runway and extending 6 inches each side of the counterweight runway, the enclosure must extend to the car top or underside of car crosshead.

(c) If overhead protection is of openwork material, it must reject a 1 1/2 inch ball and shall be sufficiently strong to support 300 pounds applied at any point. Simultaneous application of these loads is not required.

(d) Suitable overhead protection may be installed directly over the area where the operator runs the controls, providing the overhead protection covers sufficient area for safe protection of the operator.

(2) Passenger elevator cars:

(a) Passenger elevator cars must be fully enclosed on all sides and the top, except the opening for entrances

(b) Enclosures must be of metal or wood in conformity with the local fire regulations.

(c) The car top must be sufficiently strong to support a load of 300 pounds applied at any point. Simultaneous application of these loads is not required.

[Statutory Authority: RCW 70.87.020, 70.87.030, 70.87.034, 70.87.120, 70.87.185 and chapter 70.87 RCW. 01-02-026, § 296-96-23215, filed 12/22/00, effective 1/22/01.]

WAC 296-96-23216 What requirements apply to the lining materials used on passenger car enclosures? Materials used for passenger car linings must meet the following specifications:

(1) Carpeting without padding may be used for interior finishes provided that it has a Class I rating, a flame spread of 25 or less which must include all assembly components except the adhesive. The adhesive must be a slow-burning type.

(2) Slow-burning combustible materials, other than carpet, may be used for interior finishes provided the materials have a Class II rating or better (flame spread of 75 of less), which must include all assembly components other than the adhesive. Materials must be firmly bonded flat to the enclosure and must not be padded. Fabric with spray-type fireproofing must not be installed in elevators.

(a) Equivalent ratings in watts per centimeter squared as derived in the radiant panel test are also acceptable.

(b) .45 watts/cm squared or higher is equivalent to Class I or better.

(c) .22 watts/cm squared or higher is equivalent to Class II or better.

(d) In the radiant test, the higher the number the better the flame resistance.

(e) In the Class I and II system, the lower the number, the better the flame resistance.

(f) Smoke density of materials must be less than 450 when tested in accordance with UBC Standard No. 42.-1.

(3) Certification that the materials and assembly meet these requirements must be submitted to the building official.

[Statutory Authority: RCW 70.87.020, 70.87.030, 70.87.034, 70.87.120, 70.87.185 and chapter 70.87 RCW. 01-02-026, § 296-96-23216, filed 12/22/00, effective 1/22/01.]

WAC 296-96-23220 What requirements apply to car doors and gates? Car doors or gates are required at each entrance to the elevator car.

(1) Car doors or gates may be horizontal or vertical sliding.

(2) Gates, except collapsible, may be solid or may be openwork of a design to reject a 2 inch diameter ball. Gates must be:

(a) Constructed of metal or wood; and

(b) Designed so as to withstand a lateral pressure of 100 pounds applied at approximately the center without breaking or being permanently deformed and without displacing the gate from its guides or tracks.

(3) Collapsible gates must reject a 3 inch diameter ball when fully closed (extended position) when installed on passenger cars and must reject a 4 1/2 inch ball when fully extended when installed on freight cars. Such gates must not be power-opened for more than one-third of their clear opening distance or for a maximum power opening distance not to exceed 10 inches. Collapsible gates must have at least every fourth vertical member guided at the top and every second vertical member guided at the bottom.

(4) Handles of manually operated collapsible gates nearest the car operating device on elevators operated from the car only must be located so that the nearest handle is not more than 48 inches from the car operating device when the gate is closed and not more than 48 inches above the car floor. Gate handles must be provided with finger guard.

(5) Car doors and gates when in the fully closed position must meet the following specifications:

(a) For passenger cars, they must protect the full width and height of the car entrance opening provided that vertically sliding gates may extend from a point not more than 1 inch above the car floor to a point not less than 6 feet above the floor.

(b) For freight elevators, they must protect the full width of the car entrance opening. Car doors must extend from the car floor to a height of not less than 6 feet above the car floor. Vertically sliding gates must extend from a point not more than 1 inch above the car floor to a point not less than 6 feet above the car floor.

(6) Car doors and gates of electric and electro-hydraulic elevators must be equipped with approved car door or gate electric contacts which will prevent operation of the elevator by the normal operating device unless the car door or gate is in the closed position.

[Statutory Authority: RCW 70.87.020, 70.87.030, 70.87.034, 70.87.120, 70.87.185 and chapter 70.87 RCW. 01-02-026, § 296-96-23220, filed 12/22/00, effective 1/22/01.]

WAC 296-96-23221 What requirements apply to the location of car doors and gates? This section does not apply to freight elevators with horizontally swinging doors that are inaccessible to the general public and located in factories, warehouses, garages, and other similar buildings. All other elevators must meet the following requirements:

(1) Doors or gates for automatic or continuous-pressure operation elevators must be located so that the distance from the face of the car door or gate to the face of the hoistway door is no more than the following:

(a) Where a swinging-type hoistway door and a car gate are used, 4 inches.

(b) Where a swinging-type hoistway door and a car door are used, 5 1/2 inches.

(c) Where a sliding-type hoistway door and a car gate or door are used, 5 1/2 inches.

(2) The distances specified must be measured as follows:

(a) Where a multisection car door and a multisection hoistway door are used or where one of these doors is multisection and the other is single section, between the sections of the car door and the hoistway doors nearest to each other.

(b) Where a multisection car door and a swinging-type hoistway door are used, between the hoistway door and the section of the car door farthest from it. Where space conditions require the use of three-speed car doors, the distance must be measured from the intermediate speed panel.

(c) Where a car gate is used, between the car gate and the section of the hoistway door nearest to the car gate.

(3) Where existing distances are greater than specified by paragraphs (1) and (2) of this section, a space guard of

sheet metal must be provided, attached to the hoistway door and/or car door.

(a) The guard is to be mounted to the door by a tamper-proof means.

(b) The bottom of the guard must be no less than 1/8 inch nor more than 1/2 inch from the edge of the sill and must be no more than 1/2 inch above the sill.

(c) The face of the guard must run vertically no less than 40 inches nor more than the height of the lower edge of the vision panel.

(d) The guard must extend the full width of the door.

(e) The top of the guard must be inclined toward the face of the door at an angle of no less than 60 degrees nor more than 75 degrees from the horizontal.

(f) Exposed edges must be beveled or rolled to eliminate sharp edges.

(g) The guard must be sufficiently rigid or reinforced to prevent collapsing or denting.

(h) Mounting of the guard must have proper clearances at the bottom and sides to permit easy closing of the door and must not interfere with the self-closing.

(i) On multisection horizontally sliding doors only, the leading or fast panel must be fitted with the space guard. For swinging doors, the sides of the guard must be closed if the depth exceeds 5 inches.

(4) On horizontally-sliding doors where existing clearances are greater than specified by subsections (1) and (2) of this section, a vertical sight guard must be mounted to the leading edge of the hoistway door. The sight guard must:

(a) Be mounted with a vertical clearance of no more than 1/2 inch to this sill to a height of no less than 6 feet; and

(b) Project from the door, a distance of no more than 1/2 inch nor less than 1/8 inch from the hoistway edge of the sill.

(5) Only the following devices may be used to render inoperative hoistway door interlocks, the electric contacts of hoistway door combination mechanical locks and electric contacts, or car door or gate electric contacts:

(a) Leveling devices.

(b) Truck-zoning devices.

(c) Hoistway access switch.

(d) Existing devices which do not conform to the above must be removed.

[Statutory Authority: RCW 70.87.020, 70.87.030, 70.87.034, 70.87.120, 70.87.185 and chapter 70.87 RCW. 01-02-026, § 296-96-23221, filed 12/22/00, effective 1/22/01.]

WAC 296-96-23222 What control requirements apply to operating circuits? The failure of any single magnetically operated switch, contractor, or relay to release in the intended manner, or the occurrence of a single accidental ground, must not permit the car to start or run if any hoistway door interlock is unlocked or if any hoistway door or car door or gate electric contact is not in the closed position.

[Statutory Authority: RCW 70.87.020, 70.87.030, 70.87.034, 70.87.120, 70.87.185 and chapter 70.87 RCW. 01-02-026, § 296-96-23222, filed 12/22/00, effective 1/22/01.]

WAC 296-96-23225 What requirements apply to car emergency exits? (1) Top emergency exits:

(a) Top emergency exit covers must be hinged or otherwise attached to the car top so that the cover can be opened from the top of the car only and opens outward.

(b) The exit cover of the lower compartment of a multideck elevator car must be openable from either compartment.

(2) Side emergency exits:

(a) Side emergency exit doors or panels, where provided, must have a lock arranged so that the door may be opened from the inside of the car only by a special shaped removable key and outside the car by means of a nonremovable handle.

(b) Side emergency car exit door panels must open only into the car.

[Statutory Authority: RCW 70.87.020, 70.87.030, 70.87.034, 70.87.120, 70.87.185 and chapter 70.87 RCW. 01-02-026, § 296-96-23225, filed 12/22/00, effective 1/22/01.]

WAC 296-96-23226 What requirements apply to car lighting? (1) Car interiors must be equipped with at least 2 electric lights.

(2) Minimum illumination at the car threshold, with the door closed, must be at least:

(a) 5 foot candle (54 lx) for passenger elevators; and

(b) 2 1/2 foot candle (27 lx) for freight elevators.

(3) The department does not require light control switches, however, if installed they must be located in or adjacent to the car's onboard operating device.

(4) In automatic elevators, the light control switch must be either a key-operated type or located in a fixture with a locked cover.

(5) Light fixtures mounted on car tops must be equipped with a nonkey operated switch located in or adjacent to the fixture.

[Statutory Authority: RCW 70.87.020, 70.87.030, 70.87.034, 70.87.120, 70.87.185 and chapter 70.87 RCW. 01-02-026, § 296-96-23226, filed 12/22/00, effective 1/22/01.]

Section 5
Safeties

WAC 296-96-23227 What requirements apply to car safeties? Every elevator car suspended by wire ropes must be equipped with safeties. The safety device must be capable of stopping and sustaining the entire car with its rated load in the event of cable severance or overspeed. There must be a switch on the car activated by the setting of the safeties that will stop electric power from the driving machine motor and brake. Car safeties are identified and classified on the basis of performance characteristics after the safety begins to apply pressure on the guide rails.

(1) Type A safeties:

(a) Develop a rapidly increasing pressure on the guide rails during the stopping interval, the stopping distance being very short due to the inherent design of the safety.

(b) Operating force is derived entirely from the mass and the motion of the car or the counterweight being stopped.

(c) Apply pressure on the guide rails through eccentrics, rollers, or similar devices without any flexible medium purposely introduced to limit the retarding force and increase the stopping distance.

(2) Type B safeties:

(a) Apply limited pressure on the guide rails during the stopping interval and provide stopping distances that are related to the mass being stopped and the speed at which application of the safety is initiated.

(b) Retarding forces are reasonably uniform after the safety is fully applied.

(c) Continuous tension in the governor rope may or may not be required to operate the safety during the entire stopping interval.

(d) Minimum and maximum distances are specified on the basis of governor tripping speed.

(3) Type C safeties (Type A with oil buffers):

(a) Develop retarding forces during the compression stroke of one or more oil buffers interposed between the lower members of the car frame and a governor-operated Type A auxiliary safety plank applied on the guide rails.

(b) The stopping distance is equal to the effective stroke of the buffers.

(4) Type G safeties:

(a) Are similar to Type B except for having a gradually increasing retarding force.

(b) May be either of the wedge clamp type or the flexible guide clamp type applied by a cable which unwinds a drum below the car floor.

(5) Slack rope safeties:

(a) Are actuated by the slackening or breaking of the hoisting ropes.

(b) Are not actuated by an overspeed governor.

[Statutory Authority: RCW 70.87.020, 70.87.030, 70.87.034, 70.87.120, 70.87.185 and chapter 70.87 RCW. 01-02-026, § 296-96-23227, filed 12/22/00, effective 1/22/01.]

WAC 296-96-23228 What is the maximum amount of governor rope movement allowed when operating a safety mechanism? For all Type B safeties, the movement of the governor rope relative to the car or the counterweight, respectively, required to operate the safety mechanism from its fully retracted position to a position where the safety jaws begin to exert pressure against the guide rails must not exceed the following values based on rated speed:

(1) For car safeties:

(a) 200 feet per minute or less: 42 inches.

(b) 201 to 375 feet per minute: 36 inches.

(c) Over 375 feet per minute: 30 inches.

(2) For counterweight safeties: 42 inches for all speeds.

(3) Drum operated car and counterweight safeties requiring continual unwinding of the safety drum rope to fully apply the safety, must be designed so that no less than three turns of the safety rope will remain on the drum after the overspeed test of the safety has been made with rated load in the car.

[Statutory Authority: RCW 70.87.020, 70.87.030, 70.87.034, 70.87.120, 70.87.185 and chapter 70.87 RCW. 01-02-026, § 296-96-23228, filed 12/22/00, effective 1/22/01.]

WAC 296-96-23229 What requirements apply to rail lubricants and lubrication plates? Rail lubricants or coating which will reduce the holding power of the safety or prevent its functioning as required must not be used.

(1) A metal plate must be securely attached to the car crosshead in an easily visible location and, where lubricants are to be used, must carry the notation, "Consult manufacturer of the safety for the characteristics of the rail lubricant to be used." If lubricants are not be to used, it should be stated so on the plate.

(2) If lubricants other than those recommended by the manufacturer are used, a safety test should be done to demonstrate that the safety will function as required.

[Statutory Authority: RCW 70.87.020, 70.87.030, 70.87.034, 70.87.120, 70.87.185 and chapter 70.87 RCW. 01-02-026, § 296-96-23229, filed 12/22/00, effective 1/22/01.]

Section 6
Speed Governors

WAC 296-96-23235 What requirements apply to speed governors? A speed governor or inertia trip safety or a slack cable must be installed on all elevators and must be designed so that it will activate the car safeties before the car attains a speed of 140 percent of the rated speed. Governor ropes must be at least 3/8 inch in diameter, if iron or steel rope, and at least 3/4 inch, if manila rope. Tiller rope must not be used.

[Statutory Authority: RCW 70.87.020, 70.87.030, 70.87.034, 70.87.120, 70.87.185 and chapter 70.87 RCW. 01-02-026, § 296-96-23235, filed 12/22/00, effective 1/22/01.]

WAC 296-96-23236 What requirements apply to speed governor overspeed and car safety mechanism switches? (1) A switch must be provided on the speed governor and operated by the overspeed action of the governor when used with Type B and C car safeties of elevators having a rated speed exceeding 150 feet per minute.

(2) A switch must be provided on the speed governor when used with a counterweight safety for any car speed.

(3) For static control, an overspeed switch must be provided regardless of rated speed and it must operate in both directions of travel.

(4) These switches must, when operated, remove power from the driving-machine motor and brake before or at the time of application of the safety.

(5) Switches used to perform the function specified must be positively opened and remain open until manually reset.

(6) Switches operated by the car safety mechanism must be of a type which will not reset unless the car safety mechanism has been returned to the "off" position.

[Statutory Authority: RCW 70.87.020, 70.87.030, 70.87.034, 70.87.120, 70.87.185 and chapter 70.87 RCW. 01-02-026, § 296-96-23236, filed 12/22/00, effective 1/22/01.]

Section 7
Capacity and Loading

WAC 296-96-23240 What is the minimum rated load for passenger elevators? The rated load in pounds for passenger elevators must be based on the inside net platform areas and must be not less than shown in the table below. The inside net platform areas must be determined as shown in the table below which shows the maximum inside net platform areas for the various common rated loads. If other rated loads are used, they must be at least the following:

(1) For an elevator with an inside net platform area of no more than 50 feet squared, W = 0.667A squared + 66.7A.

(2) For an elevator with an inside net platform area of more than 50 feet squared, W = 0.0467A squared + 125A - 1367.

NOTE: A = inside net platform area, ft. squared
W = minimum rated load, lb.

MAXIMUM* INSIDE NET PLATFORM AREAS FOR THE VARIOUS RATED LOADS			
Rated Load, lb.	Inside Net Platform Area, ft^2	Rated Load, lb.	Inside Net Platform Area, ft^2
500	7.0	5,000	50.0
600	8.3	6,000	57.7
700	9.6	7,000	65.3
1,000	13.25	8,000	72.9
1,200	15.6	9,000	80.5
1,500	18.9	10,000	88.0
1,800	22.1	12,000	103.0
2,000	24.2	15,000	125.1
2,500	29.1	18,000	146.9
3,000	33.7	20,000	161.2
3,500	38.0	25,000	196.5
4,000	42.2	30,000	231.0
4,500	46.2		
*To allow for variations in cab designs, an increase in the maximum inside net platform area not exceeding 5% will be permitted for the various rated loads.			

[Statutory Authority: RCW 70.87.020, 70.87.030, 70.87.034, 70.87.120, 70.87.185, 70.87.190, 2002 c 98, 2003 c 143 and 2004 c 66. 04-12-047, § 296-96-23240, filed 5/28/04, effective 6/30/04. Statutory Authority: RCW 70.87.020, 70.87.030, 70.87.034, 70.87.120, 70.87.185 and chapter 70.87 RCW. 01-02-026, § 296-96-23240, filed 12/22/00, effective 1/22/01.]

WAC 296-96-23241 What requirements apply to the use of partitions that reduce inside net platform area? When partitions are used in elevator cars to restrict net platform area for passenger use, they must be permanently fastened in place.

(1) Gates, doors, or handrails must not be used as partitions.

(2) Partitions must be installed to permit approximately symmetrical loading.

(3) When conditions do not permit symmetrical loading, guide rails, car frames, and platforms must be capable of sustaining the resulting stresses and deflections.

[Statutory Authority: RCW 70.87.020, 70.87.030, 70.87.034, 70.87.120, 70.87.185 and chapter 70.87 RCW. 01-02-026, § 296-96-23241, filed 12/22/00, effective 1/22/01.]

WAC 296-96-23243 What is the minimum rated load for freight elevators? The minimum rated load for freight elevators in pounds must be based on the weight and class of the load to be handled but must in no case be less than the minimum specified in this section for each class of loading based on the inside net platform area. Freight elevators must be designed for one of the following classes of loading:

(1) Class A—General freight loading: Where the load is distributed, the weight of any single piece of freight or of any single hand truck and its load is not more than one-quarter the rated load of the elevator, and the load is handled on and off the car platform manually or by means of hand trucks. For this class of loading, the rated load must be based on not less than 50 lb./ft. squared of inside net platform area.

(2) Class B—Motor vehicle loading: Where the elevator is used solely to carry automobile trucks or passenger automobiles up to the rated load of the elevator. For this class of loading, the rated load must be based on not less than 30 lb./ft. squared of inside net platform area.

(3) Class C—Industrial truck loading: Where the load is carried in transit or is handled on and off the car platform by means of power industrial trucks or by hand trucks having a loaded weight more than one-quarter the rated load of the elevator. For this class of loading the following requirements apply:

(a) The rated load must be based on not less than 50 lb./ft. squared of inside net platform area;

(b) The weight of the loaded industrial truck must not exceed the rated load of the elevator;

(c) The weight of the loaded industrial truck plus any other material carried on the elevator must not exceed the rated load when the industrial truck is also carried;

(d) During loading and unloading, the load on the elevator must in no case exceed 150 percent of the rated load, and where this load exceeds the rated load, the capacity of the brake and the traction relation must be adequate to safely sustain and level at least 150 percent of the rated load.

NOTE: When the entire rated load is placed on the elevator by the industrial truck in increments, the load imposed on the car platform while the last increment is being loaded or the first increment unloaded will exceed the rated load by the weight of the empty industrial truck.

[Statutory Authority: RCW 70.87.020, 70.87.030, 70.87.034, 70.87.120, 70.87.185 and chapter 70.87 RCW. 01-02-026, § 296-96-23243, filed 12/22/00, effective 1/22/01.]

WAC 296-96-23244 What requirements apply to capacity plates? (1) Every elevator must be equipped with a capacity plate or a painted sign that is permanently and securely fastened in place and located in a conspicuous position inside the car. It must indicated the rated load of the elevator in pounds, and for freight elevators, this plate or sign must indicate:

(a) The capacity for lifting one-piece loads;

(b) For freight elevators used for industrial truck loading where the truck is not usually carried by the elevator but used only for loading and unloading, the maximum load the elevator is designed to support while being loaded or unloaded.

(2) Capacity plates must be durable and readily legible. The height of the letters and figures must be at least 1/4 inch for passenger elevators and 1 inch for freight elevators.

[Statutory Authority: RCW 70.87.020, 70.87.030, 70.87.034, 70.87.120, 70.87.185 and chapter 70.87 RCW. 01-02-026, § 296-96-23244, filed 12/22/00, effective 1/22/01.]

WAC 296-96-23245 What requirements apply to signs on freight elevators? In addition to the capacity plate or painted sign required by WAC 296-96-23244, two other signs must be installed or painted inside the car in a conspicuous place and permanently and securely fastened to the car enclosure. They must be durable and easily read with 1/2 inch letters, as follows:

(1) In elevators not permitted to carry passengers, the sign must read "This is not a passenger elevator; no persons

other than the operator and freight handlers are permitted to ride on this elevator."

(2) In elevators permitted to carry employees, the sign must read "No passengers except employees permitted."

[Statutory Authority: RCW 70.87.020, 70.87.030, 70.87.034, 70.87.120, 70.87.185 and chapter 70.87 RCW. 01-02-026, § 296-96-23245, filed 12/22/00, effective 1/22/01.]

Section 8
Driving Machines and Sheaves

WAC 296-96-23250 What general requirements apply to driving machines and sheaves? (1) Sheaves and drums must be made of cast iron or steel and must have finished grooves for ropes.

(2) Set screws fastenings must not be used in lieu of keys or pins on connections subject to torque or tension.

(3) Friction gearing or a clutch mechanism must not be used to connect a driving-machine drum or sheave to the main driving mechanism, other than in connection with a car leveling device.

[Statutory Authority: RCW 70.87.020, 70.87.030, 70.87.034, 70.87.120, 70.87.185 and chapter 70.87 RCW. 01-02-026, § 296-96-23250, filed 12/22/00, effective 1/22/01.]

WAC 296-96-23255 What requirements apply to winding drum machines? (1) Winding drum machines must be equipped with a slack-rope device with an enclosed switch of the manually reset type which must cause the electric power to be removed from the elevator driving machine motor and brake if the hoisting ropes become slack or broken.

(2) Winding drum machines must be equipped with adjustable machine automatic terminal stop mechanisms set to directly open the main line circuit to the driving machine motor and brake coincident with the opening of the final terminal stopping switch. Chain, belt, or rope-driven mechanisms must not be used.

[Statutory Authority: RCW 70.87.020, 70.87.030, 70.87.034, 70.87.120, 70.87.185 and chapter 70.87 RCW. 01-02-026, § 296-96-23255, filed 12/22/00, effective 1/22/01.]

WAC 296-96-23256 What requirements apply to indirect-drive machines? (1) Indirect-drive machines, utilizing V belts, tooth drive belts, or chain drives, must have at least three belts or chains operating together in parallel as a set. Belt and chain drive sets must be pre-loaded and matched for length.

(2) Belt set selection must be based upon the manufacturer's rated breaking strength and a safety factor of 10. Chain and sprocket set selection must be based upon the recommendations in the supplementary information section of ASME/ANSI B 29.1, using a service factor of 2.0. Offset links in a chain are permitted. Chain drives and belt drives must be guarded to protect against accidental contact and to prevent foreign objects from interfering with drives.

Sprockets in a chain drive set and also in a driven set must be assembled into a common hub, with teeth cut in line after assembly to assure equal load distribution on all chains. Tooth sheaves for a belt drive must be constructed in a manner to assure equal load distribution on each belt in the set.

Load determination for both the belt and chain sets must be based on the maximum static loading on the elevator car (full load on the car and the car at rest at a position in the hoistway which creates the greatest load, including either the car or counterweight resting on its buffer).

(3) Each belt or chain in a set must be continuously monitored by a broken belt or chain device of the manually reset type which must function to automatically interrupt power to the machine and apply the brake in the event any belt or chain in the set breaks or becomes excessively slack. The driving machine brake must be located on the traction sheave or winding drum assembly side of the driving machine so as to be fully effective in the event the entire belt set or chain set should break.

(4) If one belt or chain of a set is worn, stretched, or damaged so as to require replacement, the entire set must be replaced. Sprockets and toothed sheaves must also be inspected on such occasion and be replaced if noticeably worn.

[Statutory Authority: RCW 70.87.020, 70.87.030, 70.87.034, 70.87.120, 70.87.185 and chapter 70.87 RCW. 01-02-026, § 296-96-23256, filed 12/22/00, effective 1/22/01.]

WAC 296-96-23260 What requirements apply to driving machine brakes? The elevator driving machine must be equipped with a friction brake applied by a spring or springs, and released electrically.

The brake must be designed to have a capacity sufficient to hold the car at rest with its rated load. For passenger elevators and freight elevators permitted to carry employees, the brake must be designed to hold the car at rest with an additional load up to 25 percent in excess of the rated load.

[Statutory Authority: RCW 70.87.020, 70.87.030, 70.87.034, 70.87.120, 70.87.185 and chapter 70.87 RCW. 01-02-026, § 296-96-23260, filed 12/22/00, effective 1/22/01.]

WAC 296-96-23261 What requirements apply to the application and release of driving machine brakes? Driving machine brakes must not be electrically released until power has been applied to the driving machine motor. All power feed lines to the brake must be opened and the brake must apply automatically when:

(1) The operating device of a car switch or continuous pressure operation elevator is in the stop position;

(2) A floor stop device functions;

(3) Any of the electrical protective devices in WAC 296-96-23272 functions;

Under conditions described in subsection (1) and (2) of this section, the application of the brake may occur on or before the completion of the slowdown and leveling operations.

The brake must not be permanently connected across the armature or field of a direct current elevator driving machine motor.

[Statutory Authority: RCW 70.87.020, 70.87.030, 70.87.034, 70.87.120, 70.87.185 and chapter 70.87 RCW. 01-02-026, § 296-96-23261, filed 12/22/00, effective 1/22/01.]

Section 9
Terminal Stopping Devices

WAC 296-96-23262 What requirements apply to normal terminal stopping devices? Enclosed upper and lower normal terminal stopping devices must be provided and arranged to slow down and stop the car automatically, at or near the top and bottom terminal landings. These devices must function independently of the operation of the normal stopping means and of the final terminal stopping device.

(1) Normal stopping devices must be located on the car, in the hoistway, or in the machine room and must be operated by the movement of the car.

(2) Broken rope, tape, or chain switches must be provided in connection with normal terminal stopping devices located in the machine room of traction elevators. These switches must be opened by a failure of the rope, tape, or chain and must cause the electrical power to be removed from the driving machine motor and brake.

[Statutory Authority: RCW 70.87.020, 70.87.030, 70.87.034, 70.87.120, 70.87.185 and chapter 70.87 RCW. 01-02-026, § 296-96-23262, filed 12/22/00, effective 1/22/01.]

WAC 296-96-23264 What requirements apply to final terminal-stopping devices? Enclosed upper and lower final terminal electro-mechanical stopping devices must be provided and arranged to prevent movement of the car by the normal operating devices in either direction of travel after the car has passed a terminal landing. Final terminal stopping devices must be located as follows:

(1) Elevators with winding drum machines must have stopping switches on the machines and also in the hoistway operated by the movement of the car.

(2) Elevators with traction driving machines must have stopping switches in the hoistway operated by the movement of the car.

[Statutory Authority: RCW 70.87.020, 70.87.030, 70.87.034, 70.87.120, 70.87.185 and chapter 70.87 RCW. 01-02-026, § 296-96-23264, filed 12/22/00, effective 1/22/01.]

Section 10
Operating Devices and Control Equipment

WAC 296-96-23266 What types of operating devices must not be used? The following types of operating devices must not be used:

(1) Rope (i.e., shipper rope);

(2) Rod operating devices activated directly by hand; or

(3) Rope operating devices activated by wheels, levers, or cranks.

[Statutory Authority: RCW 70.87.020, 70.87.030, 70.87.034, 70.87.120, 70.87.185 and chapter 70.87 RCW. 01-02-026, § 296-96-23266, filed 12/22/00, effective 1/22/01.]

WAC 296-96-23268 What requirements apply to car-switch operation elevators? The handles of lever-type operating devices of car-switch operation elevators must be arranged so that they will return to the stop position and latch there automatically when the hand of the operator is removed.

[Statutory Authority: RCW 70.87.020, 70.87.030, 70.87.034, 70.87.120, 70.87.185 and chapter 70.87 RCW. 01-02-026, § 296-96-23268, filed 12/22/00, effective 1/22/01.]

WAC 296-96-23269 What requirements apply to passenger elevator emergency stop buttons? Passenger elevator emergency stop buttons or switches must be installed and connected so as to activate the elevator alarm when in the stop position. An optional door hold open switch may be provided, if desired, but such door hold open function must automatically cancel upon activation of a Phase I recall.

[Statutory Authority: RCW 70.87.020, 70.87.030, 70.87.034, 70.87.120, 70.87.185 and chapter 70.87 RCW. 01-02-026, § 296-96-23269, filed 12/22/00, effective 1/22/01.]

WAC 296-96-23270 What requirements apply to car top operating devices? (1) Elevators with automatic or continuous-pressure operation must have a continuous-pressure button operating switch mounted on the car top for the purpose of operating the car solely from the top of the car. The device must operate the car at a speed not exceeding 150 feet per minute.

(2) The means for transferring the control of the elevator to the top-of-car operating device must be on the car top and located between the car crosshead and the side of the car nearest the hoistway entrance normally used for access to the car top.

(3) A top of car operating station must be installed on all existing elevators which have more than fifteen feet of travel.

[Statutory Authority: RCW 70.87.020, 70.87.030, 70.87.034, 70.87.120, 70.87.185, 70.87.190, 2002 c 98, 2003 c 143 and 2004 c 66. 04-12-047, § 296-96-23270, filed 5/28/04, effective 6/30/04. Statutory Authority: RCW 70.87.020, 70.87.030, 70.87.034, 70.87.120, 70.87.185 and chapter 70.87 RCW. 01-02-026, § 296-96-23270, filed 12/22/00, effective 1/22/01.]

WAC 296-96-23272 What electrical protective devices are required? Electrical protective devices must be installed according to the following:

(1) Slack-rope switch: Winding drum machines must be accompanied by a slack-rope device equipped with a slack-rope switch of the enclosed manually rest type which will cause the electric power to be removed from the elevator driving machine motor and brake if the suspension ropes become slack.

(2) Motor-generator running switch: Where generator-field control is used, means must be provided to prevent the application of power to the elevator driving machine motor and brake unless the motor generator set connections are properly switched for the running condition of the elevator. It is not required that the electrical connections between the elevator driving machine motor and the generator be opened in order to remove power from the elevator motor.

(3) Compensating rope sheave switch: Compensating rope sheaves must be provided with a compensating rope sheave switch or switches mechanically opened by the compensating rope sheave before it reaches its upper or lower limit of travel to cause the electric power to be removed from the elevator driving machine motor and brake.

(4) Broken rope, tape, or chain switches used in connection with machine room normal terminal stopping switches: Broken rope, tape, or chain switches which meet the requirements of WAC 296-96-23236 must be provided in connec-

tion with normal terminal stopping devices located in machine rooms of traction elevators. These switches must open when a rope, tape, or chain fails.

(5) Stop switch on top of car: A stop switch must be provided on the top of every elevator car, which must cause the electric power to be removed from the elevator driving machine motor and brake, and must:

(a) Be of the manually operated and closed type;

(b) Have red operating handles or buttons;

(c) Be conspicuously and permanently marked "STOP" and indicated the stop and run positions;

(d) Be positively opened mechanically (opening must not be solely dependent on springs).

(e) Have red operating handles or buttons;

(f) Be conspicuously and permanently marked "stop";

(g) Indicate the "stop" and "run" positions; and

(h) Be positively opened mechanically and not solely dependent on springs.

(6) Car-safety mechanism switch: A switch is required where a car safety is provided.

(7) Speed governor overspeed switch: A speed governor overspeed switch must be provided when required by WAC 296-96-23236.

(8) Final terminal stopping devices: Final terminal stopping devices must be provided on every elevator.

(9) Emergency terminal speed limiting device: Where reduced stoke oil buffers are provided, emergency terminal speed limiting devices are required.

(10) Motor generator overspeed protection: Means must be provided to cause the electric power to be removed automatically from the elevator driving machine motor and brake should a motor generator set, driven by a direct current motor, overspeed excessively.

(11) Motor field sensing means: Where direct current is supplied to an armature and shunt field of an elevator driving machine motor, a motor field current sensing means must be provided, which must cause the electric power to be removed from the motor armature and brake unless current is lowing in the shunt field of the motor.

A motor field current sensing means is not required for static control elevators provided with a device to detect an overspeed condition prior to, and independent of, the operation of the governor overspeed switch. This device must cause power to be removed from the elevator driving machine motor armature and machine brake.

(12) Buffer switches for oil buffers used with Type C car safeties: Oil level and compression switches must be provided for all oil buffers used with Type C safeties.

(13) Hoistway door interlocks or hoistway door electric contacts: Hoistway door interlocks or hoistway door electric contacts must be provided for all elevators.

(14) Car door/gate electric contacts: Car door or gate electric contacts must be provided on all elevators.

(15) Normal terminal stopping devices: Normal terminal stopping devices must be provided on every elevator.

(16) Car side emergency exit electric contact: An electric contact must be provided on every car side emergency exit door.

(17) Electric contacts for hinged car platform sills: Hinged car platform sills, where provided, must be equipped with electric contacts.

(18) Stop switch in the elevator pit: A stop switch must be installed in all elevator pits. It must be located between 36 inches to 48 inches above the bottom landing floor and accessible from outside the hoistway.

[Statutory Authority: RCW 70.87.020, 70.87.030, 70.87.034, 70.87.120, 70.87.185 and chapter 70.87 RCW. 01-02-026, § 296-96-23272, filed 12/22/00, effective 1/22/01.]

WAC 296-96-23274 What requirements apply to the power supply line disconnect? (1) A disconnect switch or a circuit breaker must be installed and connected into the power supply line to each elevator motor or motor generator set and controller. The power supply line must be equipped with overcurrent protection inside the machine room.

(2) The disconnect switch or circuit breaker must be of the manually closed multipole type and be visible from the elevator driving machine or motor generator set. When the disconnecting means is not within sight of the driving machine, the control panel, or the motor generator set, and additional manually operated switch must be installed adjacent to the remote equipment and connected in the control circuit to prevent starting.

(3) No provision may be made to close the disconnect switch from any other part of the building.

(4) Where there is more than one driving machine in a machine room, disconnect switches or circuit breakers must be numbered to correspond to the number of the driving machine which they control.

[Statutory Authority: RCW 70.87.020, 70.87.030, 70.87.034, 70.87.120, 70.87.185 and chapter 70.87 RCW. 01-02-026, § 296-96-23274, filed 12/22/00, effective 1/22/01.]

WAC 296-96-23276 What requirements apply to phase reversal and failure protection methods? Elevators having polyphase alternating current power supply must be equipped with a means to prevent the starting of the elevator motor if the phase rotation is in the wrong direction or if there is a failure of any phase.

This protection may be considered to be provided in the case of generator field control having alternating current motor-generator driving motors, provided a reversal of phase will not cause the elevator driving machine motor to operate in the wrong direction. Controllers on which switches are operated by polyphase torque motors provide inherent protection against phase reversal or failure.

[Statutory Authority: RCW 70.87.020, 70.87.030, 70.87.034, 70.87.120, 70.87.185 and chapter 70.87 RCW. 01-02-026, § 296-96-23276, filed 12/22/00, effective 1/22/01.]

WAC 296-96-23277 What requirements apply to grounding and overcurrent protections? (1) Control and operating circuit requirements must comply with Article 620-61 of the National Electrical Code.

(2) Grounding methods must comply with Articles 620-81 through 620-85 of the National Electrical Code.

[Statutory Authority: RCW 70.87.020, 70.87.030, 70.87.034, 70.87.120, 70.87.185 and chapter 70.87 RCW. 01-02-026, § 296-96-23277, filed 12/22/00, effective 1/22/01.]

WAC 296-96-23278 What requirements apply to the absorption of regenerated power? When a power source is

used which, in itself, is incapable of absorbing the energy generated by an overhauling load, means for absorbing sufficient energy to prevent the elevator from attaining governor tripping speed or a speed in excess of 125 percent of rated speed, whichever is lesser, must be provided on the load side of each elevator power supply line disconnecting means.

[Statutory Authority: RCW 70.87.020, 70.87.030, 70.87.034, 70.87.120, 70.87.185 and chapter 70.87 RCW. 01-02-026, § 296-96-23278, filed 12/22/00, effective 1/22/01.]

WAC 296-96-23279 What requirements apply to door by-pass systems? Door bypass systems, where used, must conform to the requirements of ASME A17.1, Rule 210.1e.

[Statutory Authority: RCW 70.87.020, 70.87.030, 70.87.034, 70.87.120, 70.87.185 and chapter 70.87 RCW. 01-02-026, § 296-96-23279, filed 12/22/00, effective 1/22/01.]

Section 11
Emergency Operation and Signaling Devices

WAC 296-96-23280 What requirements apply to all car emergency signaling devices in all buildings? All elevators must be equipped with an audible signaling device that can be activated by a switch or button marked "alarm." This switch or button must be located in or adjacent to each car's operating panel.

The signaling device must be located inside the building and audible inside the car and outside the hoistway. One signaling device may be used for a group of elevators.

[Statutory Authority: RCW 70.87.020, 70.87.030, 70.87.034, 70.87.120, 70.87.185 and chapter 70.87 RCW. 01-02-026, § 296-96-23280, filed 12/22/00, effective 1/22/01.]

Section 12
Suspension Systems and Their Connections

WAC 296-96-23282 What requirements apply to suspension systems? Cars must be suspended by steel wire ropes attached to the car frame or passing around sheaves attached to the car frame. Only iron (low carbon steel) or steel wire ropes, having the commercial classification "elevator wire rope," or wire rope specifically constructed for elevator use may be used for the suspension of elevator cars and for the suspension of counterweights. The wire material for ropes must be manufactured by the open-hearth or electric furnace process or its equivalent.

[Statutory Authority: RCW 70.87.020, 70.87.030, 70.87.034, 70.87.120, 70.87.185 and chapter 70.87 RCW. 01-02-026, § 296-96-23282, filed 12/22/00, effective 1/22/01.]

WAC 296-96-23283 What requirements apply to rope data tags? At each rope renewal, a new metal data tag must be securely attached to one of the wire rope fastenings. Rope data tags must be durable and readily legible. The height of letters and figures must be no less than 1/16 inch. This data tag must bear the following information:

(1) The diameter in inches;

(2) The manufacturer's rated breaking strength;

(3) The grade of material used;

(4) The month and year the ropes were installed;

(5) Whether nonpreformed or preformed;

(6) Construction classification

(7) Name of the person or firm who installed the ropes;

(8) Name of the manufacturer of the rope;

(9) The number of ropes; and

(10) The date on which the rope was resocketed or other types of fastening changed.

[Statutory Authority: RCW 70.87.020, 70.87.030, 70.87.034, 70.87.120, 70.87.185 and chapter 70.87 RCW. 01-02-026, § 296-96-23283, filed 12/22/00, effective 1/22/01.]

WAC 296-96-23284 What is the factor of safety for wire suspension ropes? The factor of safety for wire suspension ropes must at least be equivalent to the values shown in the following table. The factor of safety must be based on the actual rope speed corresponding to the car's rated speed. The factor of safety must be calculated by the following formula:

f = S times N over W

where

N = number of runs of rope under load. (For 2:1 roping, twice the number of ropes used. For 3:1 roping, three times, etc.)

S = manufacturer's rated breaking strength of one rope.

W = maximum static load imposed on all car ropes with the car and its rated load at any position in the hoistway.

Table 3.7.1

MAXIMUM FACTORS OF SAFETY FOR SUSPENSION WIRE ROPES

Rope Speed, fpm	Minimum Factor of Safety		Rope Speed, fpm	Minimum Factor of Safety	
	Passenger	Freight		Passenger	Freight
50	7.60	6.65	605	10.85	9.65
75	7.75	6.85	700	11.00	9.80
100	7.95	7.00	750	11.15	9.90
125	8.10	7.15	800	11.25	10.00
150	2.25	7.30	850	11.35	10.10
175	8.40	7.45	900	11.45	10.15
200	8.60	7.65	950	11.50	10.20
225	8.75	7.75	1000	11.55	10.30
250	8.90	7.90	1050	11.65	10.35
300	9.20	8.20	1100	11.70	10.40
350	9.50	8.45	1150	11.75	10.45
400	9.75	8.70	1200	11.80	10.50
450	10.00	8.90	1250	11.80	10.50
500	10.25	9.15	1300	11.85	10.55
550	10.45	9.30	1350	11.85	10.55
600	10.70	9.50	1400-2000	11.90	10.55

[Statutory Authority: RCW 70.87.020, 70.87.030, 70.87.034, 70.87.120, 70.87.185 and chapter 70.87 RCW. 01-02-026, § 296-96-23284, filed 12/22/00, effective 1/22/01.]

WAC 296-96-23285 What is the minimum number of suspension ropes allowed? All elevators, except freight elevators that do not carry passengers or freight handlers and have no means of operation in the car, must conform to the following requirements:

(1) The minimum number of hoisting ropes used is three for traction elevators and two for drum-type elevators. Where a car counterweight is used, the number of counterweight ropes used must not be less than two.

(2) The minimum diameter of hoisting and counterweight ropes is 3/8 inch. Outer wires of the ropes must be no less than 0.024 inch in diameter. The term "diameter" where

used in this section refers to the nominal diameter as given by the rope manufacturer.

[Statutory Authority: RCW 70.87.020, 70.87.030, 70.87.034, 70.87.120, 70.87.185 and chapter 70.87 RCW. 01-02-026, § 296-96-23285, filed 12/22/00, effective 1/22/01.]

WAC 296-96-23287 What requirements apply to suspension rope equalizers? Suspension rope equalizers, where provided, must be of the individual-compression spring type.

Equalizers of other types may be used with traction elevators provided the equalizers and fastenings are approved by the authority having jurisdiction on the basis of adequate tensile and fatigue tests made by a qualified laboratory. Such tests must show the ultimate strength of the equalizer and its fastenings in its several parts and assembly, which must be no less than 10 percent in excess of the strength of suspension ropes, provided that equalizers of the single-bar type, or springs in tension, must not be used to attach suspension ropes to cars or counterweights or to dead-end hitch plates.

EXCEPTION: The requirements of this section do not apply to rope equalizers that meet Rule 2.20.5 in ASME A17.1-2000.

[Statutory Authority: RCW 70.87.020, 70.87.030, 70.87.034, 70.87.120, 70.87.185, 70.87.190, 2002 c 98, 2003 c 143 and 2004 c 66. 04-12-047, § 296-96-23287, filed 5/28/04, effective 6/30/04. Statutory Authority: RCW 70.87.020, 70.87.030, 70.87.034, 70.87.120, 70.87.185 and chapter 70.87 RCW. 01-02-026, § 296-96-23287, filed 12/22/00, effective 1/22/01.]

WAC 296-96-23288 What requirements apply to securing suspension wire ropes to winding drums? Suspension wire ropes on winding drum machines must have the drum ends of the ropes secured on the inside of the drum by clamps, tapered babbitted sockets, or other means approved by the department.

[Statutory Authority: RCW 70.87.020, 70.87.030, 70.87.034, 70.87.120, 70.87.185 and chapter 70.87 RCW. 01-02-026, § 296-96-23288, filed 12/22/00, effective 1/22/01.]

WAC 296-96-23289 What requirements apply to spare rope turns on winding drum machines? Suspension wire ropes of winding drum machines must have the drum ends of the ropes secured on the inside of the drum by clamps or by tapered babbitted sockets, or by other means approved by the department.

[Statutory Authority: RCW 70.87.020, 70.87.030, 70.87.034, 70.87.120, 70.87.185 and chapter 70.87 RCW. 01-02-026, § 296-96-23289, filed 12/22/00, effective 1/22/01.]

WAC 296-96-23290 What requirements apply to suspension rope fastenings? Spliced eyes by return loop may continue in service. Suspension rope fastenings must conform to the requirements of ASME A17.1 Rule 212.9 when the ropes are replaced.

[Statutory Authority: RCW 70.87.020, 70.87.030, 70.87.034, 70.87.120, 70.87.185 and chapter 70.87 RCW. 01-02-026, § 296-96-23290, filed 12/22/00, effective 1/22/01.]

WAC 296-96-23291 What requirements apply to auxiliary rope fastening devices? Auxiliary rope fastening devices, designed to support cars or counterweights if any regular rope fastenings fail, may be provided subject to approval by the authority having jurisdiction.

[Statutory Authority: RCW 70.87.020, 70.87.030, 70.87.034, 70.87.120, 70.87.185 and chapter 70.87 RCW. 01-02-026, § 296-96-23291, filed 12/22/00, effective 1/22/01.]

Subpart III
Hydraulic Elevators

WAC 296-96-23300 What is the scope of Subpart III, Hydraulic Elevators? Subpart III, Hydraulic Elevator, is the minimum standard for existing direct plunger and roped hydraulic elevators.

[Statutory Authority: RCW 70.87.020, 70.87.030, 70.87.034, 70.87.120, 70.87.185 and chapter 70.87 RCW. 01-02-026, § 296-96-23300, filed 12/22/00, effective 1/22/01.]

Section 1
Hoistways, Hoistway Enclosures, and Related Construction

WAC 296-96-23302 What requirements apply to hoistways, hoistway enclosures and related construction? All hoistways, hoistway enclosures and related construction must conform to the requirements of Subpart I, Hoistways and Related Construction for Electric and Hydraulic Elevators.

[Statutory Authority: RCW 70.87.020, 70.87.030, 70.87.034, 70.87.120, 70.87.185 and chapter 70.87 RCW. 01-02-026, § 296-96-23302, filed 12/22/00, effective 1/22/01.]

WAC 296-96-23303 What requirements apply to hydraulic elevators without safety bulkheads? (1) Oil levels must be monitored and tracked in a log.

(2) The log must contain the date the oil was added, the reason for the loss of oil, and the amount of oil added.

(3) If the reason for the loss of oil cannot be determined, the unit must be immediately taken out of service and the cylinder must be replaced.

Note: This section becomes effective August 20, 2004.

[Statutory Authority: Chapter 70.87 RCW. 04-15-104, § 296-96-23303, filed 7/20/04, effective 8/20/04.]

Section 2
Mechanical Equipment

WAC 296-96-23304 What requirements apply to buffers and bumpers? Car buffers or bumpers must be provided. Solid bumpers may be used in lieu of buffers where the rated speed is 50 feet per minute or less.

[Statutory Authority: RCW 70.87.020, 70.87.030, 70.87.034, 70.87.120, 70.87.185 and chapter 70.87 RCW. 01-02-026, § 296-96-23304, filed 12/22/00, effective 1/22/01.]

WAC 296-96-23307 What requirements apply to car frames and platforms? All car frames and platforms must conform to the requirements of WAC 296-96-23206.

[Statutory Authority: RCW 70.87.020, 70.87.030, 70.87.034, 70.87.120, 70.87.185 and chapter 70.87 RCW. 01-02-026, § 296-96-23307, filed 12/22/00, effective 1/22/01.]

WAC 296-96-23309 What requirements apply to car enclosures? Car enclosures must conform to the requirements of WAC 296-96-23215.

[Statutory Authority: RCW 70.87.020, 70.87.030, 70.87.034, 70.87.120, 70.87.185 and chapter 70.87 RCW. 01-02-026, § 296-96-23309, filed 12/22/00, effective 1/22/01.]

WAC 296-96-23311 What requirements apply to capacity and loading? Capacity and loading must conform to the requirements of WAC 296-96-23240.

[Statutory Authority: RCW 70.87.020, 70.87.030, 70.87.034, 70.87.120, 70.87.185 and chapter 70.87 RCW. 01-02-026, § 296-96-23311, filed 12/22/00, effective 1/22/01.]

Section 3
Driving Machines

WAC 296-96-23313 What requirements apply to driving machine connections? The driving member of a direct plunger driving machine must be attached to the car frame or car platform with fastenings of sufficient strength to support that member.

The connection to the driving machine must be capable of withstanding, without damage, any forces resulting from a plunger stop.

[Statutory Authority: RCW 70.87.020, 70.87.030, 70.87.034, 70.87.120, 70.87.185 and chapter 70.87 RCW. 01-02-026, § 296-96-23313, filed 12/22/00, effective 1/22/01.]

WAC 296-96-23316 What requirements apply to plunger stops? Plungers must be provided with solid metal stops and/or other means to prevent the plunger from traveling beyond the limits of the cylinder. Stops must be designed and constructed so as to stop the plunger from maximum speed in the up direction under full pressure without damage to the connection to the driving machine, plunger, plunger connection, or any other parts of the hydraulic system. For rated speeds exceeding 100 feet per minute where a solid metal stop is provided, means other than the normal terminal stopping device (i.e., emergency terminal speed limiting device) must be provided to retard the car to 100 feet per minute with a retardation no greater than gravity, before striking the stop.

[Statutory Authority: RCW 70.87.020, 70.87.030, 70.87.034, 70.87.120, 70.87.185 and chapter 70.87 RCW. 01-02-026, § 296-96-23316, filed 12/22/00, effective 1/22/01.]

Section 4
Valves, Supply Piping, and Fittings

WAC 296-96-23318 What requirements apply to pump relief valves? (1) Each pump or group of pumps must be equipped with a relief valve conforming to the following specifications, except as covered by subsection (2) of this section:

(a) The relief valve must be located between the pump and the check valve and must be of such a type and installed in the by-pass connection so that the valve cannot be shut off from the hydraulic system.

(b) The relief valve must be preset to open at a pressure no greater than 125 percent of working pressure.

(c) The size of the relief valve and bypass must be sufficient to pass the maximum rated capacity of the pump without raising the pressure more than 20 percent above that at which the valve opens. Two or more relief valves may be used to obtain the required capacity.

(d) Relief valves having exposed pressure adjustments, if used, must have their means of adjustment sealed after being set to the correct pressure.

(2) No relief valve is required for centrifugal pumps driven by induction motors, provided the shutoff, or maximum pressure which the pump can develop, is not greater than 135 percent of the working pressure at the pump.

[Statutory Authority: RCW 70.87.020, 70.87.030, 70.87.034, 70.87.120, 70.87.185 and chapter 70.87 RCW. 01-02-026, § 296-96-23318, filed 12/22/00, effective 1/22/01.]

WAC 296-96-23321 What requirements apply to check valves? A check valve must be provided and must be installed so that it will hold the elevator car with rated load at any point when the pump stops or the maintained pressure drops below the minimum operating pressure.

[Statutory Authority: RCW 70.87.020, 70.87.030, 70.87.034, 70.87.120, 70.87.185 and chapter 70.87 RCW. 01-02-026, § 296-96-23321, filed 12/22/00, effective 1/22/01.]

WAC 296-96-23322 What requirements apply to supply piping and fittings? Supply piping and fittings must be in sound condition and secured in place.

[Statutory Authority: RCW 70.87.020, 70.87.030, 70.87.034, 70.87.120, 70.87.185 and chapter 70.87 RCW. 01-02-026, § 296-96-23322, filed 12/22/00, effective 1/22/01.]

WAC 296-96-23323 What requirements apply to flexible hydraulic connections? When flexible hydraulic connections are replaced, the requirements of ANSI A17.1, Rule 303.1d must be met in all respects. Where flexible connections pass through walls, the replacement must be made with steel piping.

[Statutory Authority: RCW 70.87.020, 70.87.030, 70.87.034, 70.87.120, 70.87.185 and chapter 70.87 RCW. 01-02-026, § 296-96-23323, filed 12/22/00, effective 1/22/01.]

Section 5
Tanks

WAC 296-96-23324 What general requirements apply to tanks? (1) All tanks must have sufficient capacity to provide for an adequate liquid reserve to prevent the entrance of air or other gas into the system.

(2) The permissible minimum liquid level must be clearly indicated.

[Statutory Authority: RCW 70.87.020, 70.87.030, 70.87.034, 70.87.120, 70.87.185 and chapter 70.87 RCW. 01-02-026, § 296-96-23324, filed 12/22/00, effective 1/22/01.]

WAC 296-96-23325 What requirements apply to pressure tanks? (1) Tanks which may be subjected to vacuum sufficient to cause collapse must be provided with one or more vacuum relief valves with openings of sufficient size to prevent collapse of the tank.

(2) Tanks must be provided with one or more gauge glasses attached directly to the tank and equipped to shut off the liquid automatically in case of failure of the glass. The gauge glass or glasses must be located so as to indicate any

level of the liquid between permissible minimum and maximum levels and be equipped with a manual cock at the bottom of the lowest glass.

(3) Tanks must be provided with a pressure gauge which will indicate the pressure correctly to no less than 1 1/2 times the pressure setting of the relief valve. The gauge must be connected to the tank or water column by pipe and fittings with a stop cock in such a manner that it cannot be shut off from the tank except by a stop cock. The stop cock must have a "T" or level handle set in line with the direction of flow through the valve when open.

(4) Tanks must have a 1/4 inch pipe size valve connection for attaching an inspector's pressure gauge when the tank is in service.

(5) Tanks must be equipped with means to render the elevator inoperative if for any reason the liquid level in the tank falls below the permissible minimum.

(6) Tanks must be equipped with means for internal inspection.

(7) Piping and fittings for gauge glasses, relief valves, and pressure gauges must be of a material that will not be corroded by the liquid used in the tank.

[Statutory Authority: RCW 70.87.020, 70.87.030, 70.87.034, 70.87.120, 70.87.185 and chapter 70.87 RCW. 01-02-026, § 296-96-23325, filed 12/22/00, effective 1/22/01.]

Section 6
Terminal Stopping Devices

WAC 296-96-23326 What requirements apply to terminal stopping devices? Terminal stopping devices must conform to the requirements of WAC 296-96-23262.

[Statutory Authority: RCW 70.87.020, 70.87.030, 70.87.034, 70.87.120, 70.87.185 and chapter 70.87 RCW. 01-02-026, § 296-96-23326, filed 12/22/00, effective 1/22/01.]

Section 7
Operating Devices and Control Equipment

WAC 296-96-23328 What requirements apply to operating devices? Operating devices must conform to the requirements of WAC 296-96-23266 and 296-96-23268.

[Statutory Authority: RCW 70.87.020, 70.87.030, 70.87.034, 70.87.120, 70.87.185 and chapter 70.87 RCW. 01-02-026, § 296-96-23328, filed 12/22/00, effective 1/22/01.]

WAC 296-96-23330 What requirements apply to car top operating devices? Top-of-car operating devices must be provided and must conform to the requirements of WAC 296-96-23270, except for uncounterweighted elevators having a rise of no more than 15 feet.

The bottom normal terminal stopping device may be made ineffective while the elevator is under the control of the top-of-car operating device.

[Statutory Authority: RCW 70.87.020, 70.87.030, 70.87.034, 70.87.120, 70.87.185 and chapter 70.87 RCW. 01-02-026, § 296-96-23330, filed 12/22/00, effective 1/22/01.]

WAC 296-96-23332 What requirements apply to anti-creep leveling devices? Each elevator must be provided with an anticreep leveling device conforming to the following specifications:

(1) It must maintain the car within 3 inches of the landing regardless of the position of the hoistway door.

(2) For electrohydraulic elevators, it must operate the car only in the up direction.

(3) For maintained pressure hydraulic elevators, it must operate the car in both directions.

(4) Its operation may depend on the availability of the electric power supply provided that:

(a) The power supply line disconnecting means required by WAC 296-96-23274 is kept in the closed position at all times except during maintenance, repairs, and inspections;

(b) The electrical protective devices required by WAC 296-96-23334 must not cause the power to be removed from the device.

[Statutory Authority: RCW 70.87.020, 70.87.030, 70.87.034, 70.87.120, 70.87.185 and chapter 70.87 RCW. 01-02-026, § 296-96-23332, filed 12/22/00, effective 1/22/01.]

WAC 296-96-23334 What requirements apply to electrical protective devices? Electrical protective devices, if provided, must conform with the requirements of WAC 296-96-23272 and operate as follows:

(1) The following devices must prevent operation of the elevator by the normal operating device and also the movement of the car in response to the anticreep leveling device:

(a) Stop switches in the pit;

(b) Stop switches on top of the car; and

(c) Car side emergency exit door electric contacts, where such doors are provided.

(2) The following devices must prevent the operation of the elevator by the normal operating device but the anticreep leveling device required by WAC 296-96-23332 must remain operative:

(a) Emergency stop switches in the car;

(b) Broken rope, tape, or chain switches on normal terminal stopping devices when such devices are located in the machine room or overhead space;

(c) Hoistway door interlocks or hoistway door electric contacts;

(d) Car door or gate electric contacts; and

(e) Hinged car platform sill electric contacts.

[Statutory Authority: RCW 70.87.020, 70.87.030, 70.87.034, 70.87.120, 70.87.185 and chapter 70.87 RCW. 01-02-026, § 296-96-23334, filed 12/22/00, effective 1/22/01.]

WAC 296-96-23336 What requirements apply to power supply line disconnects? Power supply line disconnects must conform to the requirements of WAC 296-96-23274.

[Statutory Authority: RCW 70.87.020, 70.87.030, 70.87.034, 70.87.120, 70.87.185 and chapter 70.87 RCW. 01-02-026, § 296-96-23336, filed 12/22/00, effective 1/22/01.]

WAC 296-96-23338 What requirements apply to devices that make hoistway door interlocks or electric contacts and car door (gate) electric contacts inoperative? The installation of these contacts must conform to the requirements of WAC 296-96-23221.

[Statutory Authority: RCW 70.87.020, 70.87.030, 70.87.034, 70.87.120, 70.87.185 and chapter 70.87 RCW. 01-02-026, § 296-96-23338, filed 12/22/00, effective 1/22/01.]

WAC 296-96-23340 What requirements apply to control and operating circuits? Control and operating circuits must conform to the requirements of WAC 296-96-23222.

[Statutory Authority: RCW 70.87.020, 70.87.030, 70.87.034, 70.87.120, 70.87.185 and chapter 70.87 RCW. 01-02-026, § 296-96-23340, filed 12/22/00, effective 1/22/01.]

WAC 296-96-23342 What requirements apply to emergency operation and signaling devices? Emergency operation and signaling devices must conform to the requirements of WAC 296-96-23280.

[Statutory Authority: RCW 70.87.020, 70.87.030, 70.87.034, 70.87.120, 70.87.185 and chapter 70.87 RCW. 01-02-026, § 296-96-23342, filed 12/22/00, effective 1/22/01.]

Section 8
Additional Requirements for Counterweighted Hydraulic Elevators

WAC 296-96-23344 What additional requirements apply to counterweighted hydraulic elevators? Counterweighted hydraulic elevators must be roped so that the counterweight must not strike the overhead when the car is resting on its fully compressed buffer. Counterweighted hydraulic elevators must conform to the requirements of WAC 296-96-23205, where applicable.

Where counterweights are provided, counterweight buffers must be provided.

[Statutory Authority: RCW 70.87.020, 70.87.030, 70.87.034, 70.87.120, 70.87.185 and chapter 70.87 RCW. 01-02-026, § 296-96-23344, filed 12/22/00, effective 1/22/01.]

Subpart IV
Escalators

WAC 296-96-23400 What is the scope of Subpart IV, Escalators? Subpart IV, Escalators, is the minimum standard for existing escalators that are used to transport passengers.

[Statutory Authority: RCW 70.87.020, 70.87.030, 70.87.034, 70.87.120, 70.87.185 and chapter 70.87 RCW. 01-02-026, § 296-96-23400, filed 12/22/00, effective 1/22/01.]

Section 1
Construction

WAC 296-96-23405 What requirements apply to balustrades? The balustrade must be totally closed except where the handrail enters the newel base. Gaps between interior panels are permitted provided that they are no wider than 3/16 inch and the edges are rounded or beveled.

[Statutory Authority: RCW 70.87.020, 70.87.030, 70.87.034, 70.87.120, 70.87.185 and chapter 70.87 RCW. 01-02-026, § 296-96-23405, filed 12/22/00, effective 1/22/01.]

WAC 296-96-23408 How much clearance is required between skirt panels and step treads? The clearance on each side of the steps between the step tread and the adjacent skirt panel must be no more than 3/16 inch.

[Statutory Authority: RCW 70.87.020, 70.87.030, 70.87.034, 70.87.120, 70.87.185 and chapter 70.87 RCW. 01-02-026, § 296-96-23408, filed 12/22/00, effective 1/22/01.]

WAC 296-96-23410 What requirements apply to guards at ceiling or soffit intersections? (1) A solid guard must be provided in the intersection of the angle of the outside balustrade (deck board) and the ceiling or soffit, except as indicated in subsection (2) of this section. The vertical edge of the guard must be a minimum of 8 inches. The escalator side of the vertical face of the guard must be flush with the face of the wellway. The exposed edge of the guard must be rounded and have a minimum width of 1/4 inch.

(2) Guards are not required under the following conditions:

(a) On high decks where the clearance of the outside edge of the deck and the ceiling or soffit is more than 12 inches or where the projected intersection of the outside deck and the ceiling or soffit is more than 24 inches from the centerline of the handrail;

(b) On low decks where the centerline of the handrail is more than 14 inches from the ceiling or soffit.

[Statutory Authority: RCW 70.87.020, 70.87.030, 70.87.034, 70.87.120, 70.87.185 and chapter 70.87 RCW. 01-02-026, § 296-96-23410, filed 12/22/00, effective 1/22/01.]

WAC 296-96-23412 What requirements apply to anti-slide devices? On high deck balustrades, antislide devices must be provided on decks or combination of decks when the outer edge of the deck is greater than 12 inches from the centerline of the handrail or on adjacent escalators when the distance between the centerline of the handrails is greater than 16 inches.

These devices must consist of raised objects fastened to the decks, not closer than 4 inches to the handrail and spaced not greater than 6 feet apart. The height must be no less than 3/4 inch. There must be no sharp corners or edges.

[Statutory Authority: RCW 70.87.020, 70.87.030, 70.87.034, 70.87.120, 70.87.185 and chapter 70.87 RCW. 01-02-026, § 296-96-23412, filed 12/22/00, effective 1/22/01.]

WAC 296-96-23414 What requirements apply to handrails? Each escalator must be equipped with a handrail that moves in the same direction and at substantially the same speed as the steps.

[Statutory Authority: RCW 70.87.020, 70.87.030, 70.87.034, 70.87.120, 70.87.185 and chapter 70.87 RCW. 01-02-026, § 296-96-23414, filed 12/22/00, effective 1/22/01.]

WAC 296-96-23416 What requirements apply to handrail guards? Hand or finger guards must be provided at the point where the handrail enters the balustrade.

[Statutory Authority: RCW 70.87.020, 70.87.030, 70.87.034, 70.87.120, 70.87.185 and chapter 70.87 RCW. 01-02-026, § 296-96-23416, filed 12/22/00, effective 1/22/01.]

WAC 296-96-23418 What requirements apply to step riser slotting? Escalators with smooth curved surface risers must have either:

(1) Steps having cleated risers provided with vertical cleats which mesh with slots on the adjacent step tread as the steps make the transition from the incline to the horizontal; or

(2) Means to cause the opening of the power circuits to the escalator driving machine motor and brake should a step be displaced against the upthrust track at the upper and lower curves in the passenger carrying line of the track system.

[Statutory Authority: RCW 70.87.020, 70.87.030, 70.87.034, 70.87.120, 70.87.185 and chapter 70.87 RCW. 01-02-026, § 296-96-23418, filed 12/22/00, effective 1/22/01.]

WAC 296-96-23420 What requirements apply to step tread slotting? The tread surface of each step must be slotted in a direction parallel to the travel of the steps.

[Statutory Authority: RCW 70.87.020, 70.87.030, 70.87.034, 70.87.120, 70.87.185 and chapter 70.87 RCW. 01-02-026, § 296-96-23420, filed 12/22/00, effective 1/22/01.]

WAC 296-96-23422 What requirements apply to combplates? There must be a combplate at the entrance and at the exit of every escalator. The combplate teeth must be meshed with and set into the slots in the tread surface so that the points of the teeth are always below the upper surface of the treads.

[Statutory Authority: RCW 70.87.020, 70.87.030, 70.87.034, 70.87.120, 70.87.185 and chapter 70.87 RCW. 01-02-026, § 296-96-23422, filed 12/22/00, effective 1/22/01.]

Section 2
Brakes

WAC 296-96-23424 What general requirements apply to escalator brakes? Escalators must be equipped with a brake capable of stopping the up or down traveling escalator with any load up to the brake rated load. The brake must be mechanically or magnetically applied. If the brake is magnetically applied, a ceramic permanent magnet must be used.

[Statutory Authority: RCW 70.87.020, 70.87.030, 70.87.034, 70.87.120, 70.87.185 and chapter 70.87 RCW. 01-02-026, § 296-96-23424, filed 12/22/00, effective 1/22/01.]

WAC 296-96-23427 What requirements apply to main drive shaft brakes? If the escalator brake is separated from the main drive shaft by a chain used to connect the driving machine to the main drive shaft, a mechanically or magnetically applied brake capable of stopping a down running escalator with brake rated load must be provided on the main drive shaft. If the brake is magnetically applied, a ceramic permanent magnet must be used.

[Statutory Authority: RCW 70.87.020, 70.87.030, 70.87.034, 70.87.120, 70.87.185 and chapter 70.87 RCW. 01-02-026, § 296-96-23427, filed 12/22/00, effective 1/22/01.]

Section 3
Operating and Safety Devices

WAC 296-96-23429 What requirements apply to starting switches? Starting switches must be of the key-operated type and must be located so that the escalator steps are within sight.

[Statutory Authority: RCW 70.87.020, 70.87.030, 70.87.034, 70.87.120, 70.87.185 and chapter 70.87 RCW. 01-02-026, § 296-96-23429, filed 12/22/00, effective 1/22/01.]

WAC 296-96-23431 What requirements apply to emergency stop buttons? There must be a red stop button in an accessible location at the top and bottom landings of each escalator. The operation of either one of these buttons must cause the interruption of power to the escalator. It must be impossible to start an escalator by means of these buttons. These buttons must be marked "escalator stop button."

[Statutory Authority: RCW 70.87.020, 70.87.030, 70.87.034, 70.87.120, 70.87.185 and chapter 70.87 RCW. 01-02-026, § 296-96-23431, filed 12/22/00, effective 1/22/01.]

WAC 296-96-23432 What requirements apply to speed governors? (1) A speed governor must be provided, except as specified in subsection (2) of this section. Its operation must cause the interruption of power to the driving machine if the speed of the steps exceeds a predetermined value, which must be no more than 40 percent above the rated speed.

(2) The speed governor is not required where an alternating current squirrel cage induction motor is used and the motor is directly connected to the driving machine. (NOTE: The governor may be omitted in such case even though a chain is used to connect the sprocket on the driving machine to the sprocket on the main drive shaft.)

[Statutory Authority: RCW 70.87.020, 70.87.030, 70.87.034, 70.87.120, 70.87.185 and chapter 70.87 RCW. 01-02-026, § 296-96-23432, filed 12/22/00, effective 1/22/01.]

WAC 296-96-23434 What requirements apply to broken step-chain devices? A broken step-chain device must be provided to cause the interruption of power to the driving machine if a step chain breaks, and, where no automatic chain tension is provided, if excessive sag occurs in either step chain.

[Statutory Authority: RCW 70.87.020, 70.87.030, 70.87.034, 70.87.120, 70.87.185 and chapter 70.87 RCW. 01-02-026, § 296-96-23434, filed 12/22/00, effective 1/22/01.]

WAC 296-96-23436 What requirements apply to brake applications? The brake must automatically stop the escalator when any of the safety devices function.

[Statutory Authority: RCW 70.87.020, 70.87.030, 70.87.034, 70.87.120, 70.87.185 and chapter 70.87 RCW. 01-02-026, § 296-96-23436, filed 12/22/00, effective 1/22/01.]

WAC 296-96-23438 What requirements apply to broken drive-chain devices? When the driving machine is connected to the main drive shaft by a chain, a device must be provided which will cause the application of the brake on the main drive shaft and also stop the drive machine if the drive chain parts.

[Statutory Authority: RCW 70.87.020, 70.87.030, 70.87.034, 70.87.120, 70.87.185 and chapter 70.87 RCW. 01-02-026, § 296-96-23438, filed 12/22/00, effective 1/22/01.]

WAC 296-96-23440 What requirements apply to skirt obstruction devices? Means must be provided to stop the escalator if an object becomes accidentally caught

between the step and the skirt as the step approaches the upper or lower combplate. The device shall be located so that the escalator will stop before that object reaches the combplate.

[Statutory Authority: RCW 70.87.020, 70.87.030, 70.87.034, 70.87.120, 70.87.185 and chapter 70.87 RCW. 01-02-026, § 296-96-23440, filed 12/22/00, effective 1/22/01.]

WAC 296-96-23442 What requirements apply to rolling shutter devices? Rolling shutters, if used, must be equipped with a device which will be activated as the shutters begin to close to cause the opening of the power circuit to the escalator driving machine motor and brake.

[Statutory Authority: RCW 70.87.020, 70.87.030, 70.87.034, 70.87.120, 70.87.185 and chapter 70.87 RCW. 01-02-026, § 296-96-23442, filed 12/22/00, effective 1/22/01.]

WAC 296-96-23444 What requirements apply to reversal stop device? Means must be provided to cause the opening of the power circuit to the driving machine motor and brake in case of accidental reversal of travel while the escalator is operating in the ascending direction.

[Statutory Authority: RCW 70.87.020, 70.87.030, 70.87.034, 70.87.120, 70.87.185 and chapter 70.87 RCW. 01-02-026, § 296-96-23444, filed 12/22/00, effective 1/22/01.]

WAC 296-96-23446 What requirements apply to tandem operations? Tandem operation escalators must be electrically interlocked where traffic flow is such that bunching will occur if the escalator is carrying passengers away from the intermediate landing stops.

The electrical interlocks must stop the escalator carrying passengers into the common intermediate landing if the escalator carrying passengers away from the landing stops. These escalators must also be electrically interlocked to assure that they run in the same direction.

[Statutory Authority: RCW 70.87.020, 70.87.030, 70.87.034, 70.87.120, 70.87.185 and chapter 70.87 RCW. 01-02-026, § 296-96-23446, filed 12/22/00, effective 1/22/01.]

WAC 296-96-23448 What requirements apply to caution signs? A caution sign must be located at the top and bottom landings of each escalator, readily visible to the boarding passengers. The sign must be of the standard design recognized by the elevator industry and include the following:

(1) Caution;
(2) Passenger only;
(3) Hold handrail;
(4) Attend children; and
(5) Avoid sides.

[Statutory Authority: RCW 70.87.020, 70.87.030, 70.87.034, 70.87.120, 70.87.185 and chapter 70.87 RCW. 01-02-026, § 296-96-23448, filed 12/22/00, effective 1/22/01.]

Section 4
Lighting of Step Treads

WAC 296-96-23450 What requirements apply to step tread lighting? Step treads must be illuminated throughout their run. The light intensity on the treads must be in accordance with local codes and ordinances for stairways.

It is recommended that the illumination be of uniform intensity and that it not contrast significantly with that of the surrounding area.

[Statutory Authority: RCW 70.87.020, 70.87.030, 70.87.034, 70.87.120, 70.87.185 and chapter 70.87 RCW. 01-02-026, § 296-96-23450, filed 12/22/00, effective 1/22/01.]

Subpart V
Dumbwaiters and Hand-Powered Elevators

WAC 296-96-23500 What is the scope of Subpart V, Dumbwaiters and hand-powered elevators? Subpart V, Dumbwaiters and Hand-Powered Elevators, is a minimum standard for existing electric and hand-powered dumbwaiters and hand-powered elevators.

[Statutory Authority: RCW 70.87.020, 70.87.030, 70.87.034, 70.87.120, 70.87.185 and chapter 70.87 RCW. 01-02-026, § 296-96-23500, filed 12/22/00, effective 1/22/01.]

WAC 296-96-23510 What requirements apply to electric and electro-hydraulic dumbwaiters? (1) Dumbwaiter cars may be constructed of metal or wood and must be in compliance with local ordinances as to fire resistance providing it is constructed to carry its rated load without distortion. The dumbwaiter car must be fully enclosed except for the landing sides. The car floor must not exceed 9 square feet in area and the total inside height must not exceed 4 feet and the maximum capacity must not exceed 500 pounds.

(2) Electrically-operated machines must be equipped with brakes that are electrically released and applied automatically by springs in conformity with the requirements set forth in WAC 296-96-23260.

(3) Dumbwaiters equipped with winding drum machines having a travel of more than 30 feet and a rated load of more than 100 pounds, must be equipped with a slack rope switch which will automatically remove the power from the motor and brake when the hoisting ropes become slack.

[Statutory Authority: RCW 70.87.020, 70.87.030, 70.87.034, 70.87.120, 70.87.185 and chapter 70.87 RCW. 01-02-026, § 296-96-23510, filed 12/22/00, effective 1/22/01.]

WAC 296-96-23540 What requirements apply to hand-power elevators and dumbwaiters? (1) Cars of hand-power elevators and dumbwaiters must be enclosed on all sides not used for entrance. Elevator cars upon which an operator is permitted to ride must have no more than one compartment.

(2) Hand elevators having a travel of more than 15 feet must have a car safety, capable of stopping and sustaining the car and rated load. The car safety device need not be operated by a speed governor and may be of the instantaneous type operated as a result of the breaking and slackening of the suspension members.

(3) Hoistway doors for hand-powered elevators must be designed so that they will ensure protection at each landing.

(4) Doors for hand-powered dumbwaiters must be designed so that they will ensure protection at all landings.

(5) Every hoistway door, gate, or entrance of hand elevators and hand dumbwaiters must have conspicuously dis-

played on the landing side in letters no less than 2 inches high, the words "Danger—Elevator—Keep closed," or "Danger—Dumbwaiter—Keep closed."

[Statutory Authority: RCW 70.87.020, 70.87.030, 70.87.034, 70.87.120, 70.87.185 and chapter 70.87 RCW. 01-02-026, § 296-96-23540, filed 12/22/00, effective 1/22/01.]

Subpart VI
Alterations, Repairs and Maintenance

WAC 296-96-23600 What is the scope of Part VI, Alterations, Repairs and Maintenance? Subpart VI, Alterations, Repairs and Maintenance, applies to periodic inspections, tests, alterations, and maintenance.

[Statutory Authority: RCW 70.87.020, 70.87.030, 70.87.034, 70.87.120, 70.87.185 and chapter 70.87 RCW. 01-02-026, § 296-96-23600, filed 12/22/00, effective 1/22/01.]

WAC 296-96-23610 What requirements apply to routine periodic inspections and tests? The owner or the owner's agent must ensure that her/his conveyances are inspected and tested periodically by a person qualified to perform such services. All conveyances must be tested to the applicable code(s) by an elevator mechanic licensed in the appropriate category for the conveyance being tested.

(1) For annual testing of electric, hydraulic, and roped hydraulic elevators, a log indicating the date of testing with all pertinent data included must be posted in the machine room. The log must be completed by the qualified person performing the test.

Note: The fire service and smoke detector testing may be performed and logged by the building owner.

(2)(a) For five-year testing of electric, hydraulic and roped hydraulic elevators a full load safety test must be performed with weights.

(b) For roped hydraulic elevators a static load test with the full load on the car must also be performed.

(c) For tests administered under this subsection:

(i) A log indicating the date of testing with all pertinent data included must be posted in the machine room. The log must be completed by the licensed elevator mechanic performing the test.

(ii) A safety tag with the date and company conducting the test must be permanently attached to the governor, safeties, and the rupture valves with a wire and seal.

(iii) Documentation must be submitted to the department.

Note: Separate safety tags must be used to distinguish the no-load annual safety test and the five-year full load test.

(d) Qualified people will conduct the test. A qualified person is either:

(i) An elevator mechanic licensed in the appropriate category for the conveyance being tested;

(ii) The representative of a firm that manufactured the particular material lift, and who holds a current temporary mechanic's license in this state; or

(iii) The representative of a firm that manufactured the particular material lift who is working under the direct supervision of an elevator mechanic licensed in the appropriate category for the conveyance being tested.

Escalators shall be tested and cleaned annually. Upon completion of this work, the appropriate form indicating that the work was done must be submitted to the department.

(3) All other conveyances requiring annual testing must have tags indicating the date and the name of the company who performed the test. When the required location for mounting the tag is not readily accessible, the tag may be mounted on the main line disconnect.

[Statutory Authority: RCW 70.87.020, 70.87.030, 70.87.034, 70.87.120, 70.87.185, 70.87.190, 2002 c 98, 2003 c 143 and 2004 c 66. 04-12-047, § 296-96-23610, filed 5/28/04, effective 6/30/04. Statutory Authority: RCW 70.87.020, 70.87.030, 70.87.034, 70.87.120, 70.87.185 and chapter 70.87 RCW. 01-02-026, § 296-96-23610, filed 12/22/00, effective 1/22/01.]

WAC 296-96-23620 What requirements apply to alterations, repairs and maintenance? The owner or the owner's agent is responsible for the safe operation, proper maintenance, and alteration of his or her conveyance(s) and must comply with ASME A17.1, Part XII.

[Statutory Authority: RCW 70.87.020, 70.87.030, 70.87.034, 70.87.120, 70.87.185 and chapter 70.87 RCW. 01-02-026, § 296-96-23620, filed 12/22/00, effective 1/22/01.]

WAC 296-96-23630 What requirements apply to elevator equipment displaced by seismic activity? Any elevator equipment, hydraulic or cable type, that is displaced as a result of seismic activity must be anchored to conform with current standards, when repaired or reanchored to the building.

[Statutory Authority: RCW 70.87.020, 70.87.030, 70.87.034, 70.87.120, 70.87.185 and chapter 70.87 RCW. 01-02-026, § 296-96-23630, filed 12/22/00, effective 1/22/01.]

Subpart VII
Lifts for Physically Handicapped

WAC 296-96-23700 What is the scope of Subpart VII, Lifts for Physically Handicapped? The department's rules regulating lifting devices for physically handicapped people are described in this subpart.

[Statutory Authority: RCW 70.87.020, 70.87.030, 70.87.034, 70.87.120, 70.87.185 and chapter 70.87 RCW. 01-02-026, § 296-96-23700, filed 12/22/00, effective 1/22/01.]

WAC 296-96-23710 What requirements apply to lifts for the physically handicapped? Inclined and vertical chairlifts and inclined and vertical wheelchair lifts installed only for use by persons with disabilities in locations other than in or at a private residence must be equipped with a standard electric switch Chicago lock with key #2252. This requirement is in addition to ASME A17.1, Part XX, and the Washington state rules and regulations on barrier-free design.

[Statutory Authority: RCW 70.87.020, 70.87.030, 70.87.034, 70.87.120, 70.87.185 and chapter 70.87 RCW. 01-02-026, § 296-96-23710, filed 12/22/00, effective 1/22/01.]

Subpart VIII
Sidewalk Elevators

WAC 296-96-23800 What is the scope of Subpart VIII, Sidewalk Elevators? Subpart VIII, Sidewalk Elevators, is a minimum standard for existing power sidewalk elevators.

[Statutory Authority: RCW 70.87.020, 70.87.030, 70.87.034, 70.87.120, 70.87.185 and chapter 70.87 RCW. 01-02-026, § 296-96-23800, filed 12/22/00, effective 1/22/01.]

WAC 296-96-23810 What requirements apply to electrically-operated sidewalk elevators? Where the top opening is located in the sidewalk or other area exterior to the building, all electrical equipment on the car or in the hoistway must be weatherproof. The operation of power sidewalk elevators through openings in the sidewalk, or through openings in other exterior areas which are protected by hinged doors or vertically lifting covers, must conform to these following requirements:

(1) The elevator must be operable in both the up and down directions through the opening, only from the sidewalk or other exterior area. The operations must be by means of:

(a) Key-operated continuous pressure type, up and down switches; or

(b) Continuous pressure type up and down operating buttons on the free end of a detachable, flexible cord five feet or less in length.

(c) Continuous pressure type up and down operating buttons may be installed on the elevator car providing the control is so designed that the buttons will not function unless the sidewalk doors are locked in the open position and that a safety screen that will open and close with the car is installed.

(2) Key-operated switches must be of continuous pressure spring-return type, with the key removable only when the switch is in the off position.

[Statutory Authority: RCW 70.87.020, 70.87.030, 70.87.034, 70.87.120, 70.87.185 and chapter 70.87 RCW. 01-02-026, § 296-96-23810, filed 12/22/00, effective 1/22/01.]

Chapter 296-99 WAC
SAFETY STANDARDS FOR GRAIN HANDLING FACILITIES

WAC

296-99-010	What safety hazards does this chapter require the employer to control?
296-99-015	What grain-handling operations does this chapter cover?
296-99-020	What definitions apply to this chapter?
296-99-025	What are the requirements for an emergency action plan?
296-99-030	What training must an employer provide for employees?
296-99-035	When must an employer issue a hot work permit?
296-99-040	What practices must an employer follow for entry into grain storage structures?
296-99-045	What information must an employer provide to contractors?
296-99-050	What elements must an employer include in the housekeeping program?
296-99-055	What is the maximum allowable grate opening size?
296-99-060	How must filter collectors be installed?
296-99-065	What preventive maintenance program must an employer implement?
296-99-070	How must grain stream processing equipment be equipped?
296-99-075	How many means of emergency escape must an employer provide?
296-99-080	How must continuous-flow bulk raw grain dryers be equipped and installed?
296-99-085	What special requirements apply to inside bucket elevators?
296-99-090	Reserved.
296-99-093	Reserved.
296-99-095	Reserved.

WAC 296-99-010 What safety hazards does this chapter require the employer to control? This chapter directs the employer to control dust fires, explosions and other safety hazards in grain handling facilities including the waterfront dock areas at marine terminals (chapter 296-56 WAC will not apply).

All provisions from chapters 296-24, 296-62, and 296-800 WAC also apply. If rules in either of these chapters conflict with rules in chapter 296-99 WAC, chapter 296-99 WAC will prevail.

[Statutory Authority: RCW 49.17.010, [49.17].040, and [49.17].050. 01-11-038, § 296-99-010, filed 5/9/01, effective 9/1/01. Statutory Authority: Chapter 49.17 RCW. 97-22-065, § 296-99-010, filed 11/3/97, effective 1/1/98; 88-23-054 (Order 88-25), § 296-99-010, filed 11/14/88.]

WAC 296-99-015 What grain-handling operations does this chapter cover? (1) WAC 296-99-010 through 296-99-070 apply to:

- Dry grinding operations of soycake;
- Dry corn mills;
- Dust pelletizing plants;
- Feed mills;
- Flour mills;
- Flat storage structures;
- Grain elevators;
- Rice mills; and
- Soybean flaking operations.

(2) WAC 296-99-075, 296-99-080, and 296-99-085 apply only to grain elevators.

(3) Chapter 296-99 WAC does not apply to alfalfa storage or processing operations if they do not use grain products.

[Statutory Authority: Chapter 49.17 RCW. 97-22-065, § 296-99-015, filed 11/3/97, effective 1/1/98; 90-03-029 (Order 89-20), § 296-99-015, filed 1/11/90, effective 2/26/90; 88-23-054 (Order 88-25), § 296-99-015, filed 11/14/88.]

WAC 296-99-020 What definitions apply to this chapter? "Choked leg" means excess material buildup that stops the movement of grain and of the bucket elevator. A bucket elevator is not considered choked if it moves and the boot and discharge are clear.

"Flat storage structure" means a grain storage structure that:

- Can not empty by gravity alone;
- Can be entered through an opening at ground level; and
- Must be entered to remove leftover grain.

"Fugitive grain dust" means combustible grain dust particles, accumulated inside storage structures, that are small enough to pass through a U.S. Standard 40 mesh sieve (425 microns or less).

"Grain" means raw and processed grain of cereal grass seeds and grain products handled in facilities within the scope of WAC 296-99-015(1).

"Grain elevator" means a facility in which bulk raw grains are stored by means of elevating machinery for later shipment.

"Hot work" means work that involves electric or gas welding, cutting, brazing or similar heat-producing tasks that could be a source of ignition.

"Inside bucket elevator" means a bucket elevator with the boot and more than twenty percent of the total leg height (above grade or ground level) inside a grain elevator structure. Bucket elevators used inside of rail or truck dump sheds are not considered inside bucket elevators.

"Lagging" means a covering on drive pulleys used to increase the driving friction between the pulley and the belt.

[Statutory Authority: Chapter 49.17 RCW. 97-22-065, § 296-99-020, filed 11/3/97, effective 1/1/98; 88-23-054 (Order 88-25), § 296-99-020, filed 11/14/88.]

WAC 296-99-025 What are the requirements for an emergency action plan? The employer must develop and implement an emergency action plan that meets the requirements of WAC 296-24-567.

[Statutory Authority: Chapter 49.17 RCW. 97-22-065, § 296-99-025, filed 11/3/97, effective 1/1/98; 88-23-054 (Order 88-25), § 296-99-025, filed 11/14/88.]

WAC 296-99-030 What training must an employer provide for employees? (1) The employer must train employees:

(a) Annually; and

(b) Whenever a new job assignment exposes an employee to a new hazard.

(2) The employer must ensure that employees are trained in the following:

(a) General safety precautions against fires and explosions, including how to recognize and prevent the hazards of excess dust accumulation and ignition sources.

(b) Specific procedures and safety practices for job tasks including, but not limited to:

- Cleaning grinding equipment;
- Clearing choked legs;
- Housekeeping;
- Hot work; and
- Preventive maintenance.

(3) The employer must provide additional training for employees who are assigned special tasks, including but not limited to:

(a) Procedures for grain storage entry according to WAC 296-62-145, confined space entry, and how to:

- Control hazardous energy (lockout/tagout) according to WAC 296-24-110;
- Avoid getting buried by moving grain (engulfment);
- Avoid falling from heights; and
- Prevent mechanical hazards.

(b) How to handle flammable or toxic substances.

[Statutory Authority: Chapter 49.17 RCW. 97-22-065, § 296-99-030, filed 11/3/97, effective 1/1/98; 88-23-054 (Order 88-25), § 296-99-030, filed 11/14/88.]

WAC 296-99-035 When must an employer issue a hot work permit? (1) Before allowing an employee to start any hot work, the employer must:

(a) Issue to the employee a permit that states that all safety precautions required by WAC 296-24-695 are in place; and

(b) Keep the permit on file until the hot work is complete.

(2) The employer may allow an employee to perform hot work without a permit if:

(a) The employer's representative personally monitors the hot work to prevent employee exposure to injury from either fire or explosion during the entire operation; or

(b) The hot work is done in welding shops authorized by the employer; or

(c) The hot work is done in hot work areas authorized by the employer which are located outside of the grain handling structure.

[Statutory Authority: Chapter 49.17 RCW. 97-22-065, § 296-99-035, filed 11/3/97, effective 1/1/98; 88-23-054 (Order 88-25), § 296-99-035, filed 11/14/88.]

WAC 296-99-040 What practices must an employer follow for entry into grain storage structures? This section applies to employee entry into all grain storage structures.

(1) The employer must ensure that the practice of walking down grain is prohibited. "Walking down grain" means an employee walks on grain to make it flow within or out from a grain storage structure, or an employee is on moving grain.

(2) The employer must ensure that during the entry and occupation of a storage structure the employee uses:

- A body harness with a lifeline; or
- A boatswain's chair that meets the requirements of Part J-2 of chapter 296-24 WAC whenever:

(a) The employee is exposed to a fall hazard such as when entering from the top or above the level of the stored grain; or

(b) The employee is exposed to an engulfment hazard such as when entering at the level of the stored grain, or while walking or standing on the grain. The lifeline must be rigged so that its position and length will prevent the employee from sinking below waist level.

(3) The employer must ensure that during the occupation of storage structures, including walking or standing on grain, employees are protected from hazards related to:

- Mechanical;
- Electrical;
- Hydraulic; and
- Pneumatic equipment.

By using safeguards, lockout-tagout, or other equally effective means. All provisions for the control of hazardous energy (lockout/tagout) from WAC 296-24-110 apply to this chapter.

(4) The employer must ensure that employees are prohibited from entering any storage structure where a build-up of grain overhead (bridging) or on the sides could fall and bury them.

(5) The employer must ensure, as minimum precautions, that employee entry and occupation of all grain storage structures including flat storage structures is done according to all applicable requirements of WAC 296-62-145, confined space, when the storage structure:

- Has limited or restricted means of entry and exit; and
- Is not designed for continuous employee occupancy.

(6) The employer may allow an employee to perform confined space entry work in grain storage structures without a permit if the employer's representative personally monitors the work to prevent employee exposure to illness or injury from atmospheric hazards during the entire operation.

[Statutory Authority: RCW 49.17.010, [49.17].040, and [49.17].050. 01-11-038, § 296-99-040, filed 5/9/01, effective 9/1/01. Statutory Authority: Chapter 49.17 RCW. 97-22-065, § 296-99-040, filed 11/3/97, effective 1/1/98; 88-23-054 (Order 88-25), § 296-99-040, filed 11/14/88.]

WAC 296-99-045 What information must an employer provide to contractors? (1) The employer must inform contractors working at the grain handling facility of:

(a) General safety rules; and

(b) Specific fire and explosion hazards related to the contractor's work and work area.

(2) The employer must explain the emergency action plan to each contractor.

[Statutory Authority: Chapter 49.17 RCW. 97-22-065, § 296-99-045, filed 11/3/97, effective 1/1/98; 88-23-054 (Order 88-25), § 296-99-045, filed 11/14/88.]

WAC 296-99-050 What elements must an employer include in the housekeeping program? (1) The employer must develop and enforce a written housekeeping program that:

(a) Establishes frequency and methods for reducing and cleaning up hazardous accumulations of fugitive grain dust;

(b) Identifies priority areas for clean up of hazardous accumulations of fugitive grain dust, including floor areas:

- Within thirty-five feet (10.7 m) of inside bucket elevators;
- Of enclosed grinding equipment; and
- Of enclosed grain dryers located inside the facility; and

(c) Requires that fugitive grain dust is cleaned up immediately whenever accumulations exceed one-eighth inch (.32 cm) at priority housekeeping areas, or provide protection against fire and explosion that is equal to the required clean up.

(2) The employer must prohibit the use of compressed air to blow dust from ledges, walls, and other areas unless all machinery that provides an ignition source in the area is shut down, and all other known potential ignition sources in the area are removed or controlled.

(3) The employer must also ensure that the housekeeping program addresses procedures for removing grain and product spills from work areas. Spills are not considered fugitive grain dust accumulations.

[Statutory Authority: Chapter 49.17 RCW. 97-22-065, § 296-99-050, filed 11/3/97, effective 1/1/98; 91-11-070 (Order 91-01), § 296-99-050, filed 5/20/91, effective 6/20/91; 90-03-029 (Order 89-20), § 296-99-050, filed 1/11/90, effective 2/26/90; 88-23-054 (Order 88-25), § 296-99-050, filed 11/14/88.]

WAC 296-99-055 What is the maximum allowable grate opening size? The employer must ensure that receiving-pit feed openings, such as truck or railcar receiving-pits, are covered by grates with maximum openings of two and one-half inches (6.35 cm).

[Statutory Authority: Chapter 49.17 RCW. 97-22-065, § 296-99-055, filed 11/3/97, effective 1/1/98; 88-23-054 (Order 88-25), § 296-99-055, filed 11/14/88.]

WAC 296-99-060 How must filter collectors be installed? (1) The employer must ensure that, on a pneumatic dust collection system, each fabric dust filter collector has a monitoring device that will show a pressure drop across the surface of its filter.

(2) The employer must ensure that each filter collector installed after March 30, 1988, is:

(a) Located outside the facility; or

(b) When located inside the facility, protected by an explosion suppression system; or

(c) Isolated by a structure with at least a one hour fire-resistance rating:

- Next to an exterior wall;
- Vented to the outside; and
- The vent and ductwork must resist rupture from intense heat.

[Statutory Authority: Chapter 49.17 RCW. 97-22-065, § 296-99-060, filed 11/3/97, effective 1/1/98; 88-23-054 (Order 88-25), § 296-99-060, filed 11/14/88.]

WAC 296-99-065 What preventive maintenance program must an employer implement? (1) The employer must implement a written program that covers the requirements of WAC 296-24-110, The control of hazardous energy (lockout/tagout).

(2) The employer must implement preventive maintenance procedures that include the following:

(a) Conducting regularly scheduled inspections for specified machinery.

(b) Preparing written inspection reports kept on file that include:

- The date of each inspection;
- The name of the inspector; and
- The serial number, or other identification of the machinery as described next in (c) of this subsection.

(c) Conducting regularly scheduled inspections and completing immediate repairs of the mechanical equipment and safety controls of the following machinery:

- Grain dryers;
- Grain stream processing equipment;
- Dust collection systems including their filter collectors that malfunction or operate below designed efficiency;
- Overheated bearings; and
- Slipping or misaligned belt drives for inside bucket elevators.

When immediate repairs are not feasible, then the affected machine must be taken out of service.

(d) Performing lubrication and other maintenance according to manufacturers' recommendations or more often when needed, such as when operating records indicate that a more stringent schedule is necessary.

[Statutory Authority: Chapter 49.17 RCW. 97-22-065, § 296-99-065, filed 11/3/97, effective 1/1/98; 88-23-054 (Order 88-25), § 296-99-065, filed 11/14/88.]

WAC 296-99-070 How must grain stream processing equipment be equipped? The employer must ensure that the following grain stream processing equipment has an effective means of removing ferrous material from the incoming grain:

- Hammer mills;
- Grinders; and
- Pulverizers.

[Statutory Authority: Chapter 49.17 RCW. 97-22-065, § 296-99-070, filed 11/3/97, effective 1/1/98; 88-23-054 (Order 88-25), § 296-99-070, filed 11/14/88.]

WAC 296-99-075 How many means of emergency escape must an employer provide? The employer must provide the following number of emergency escape means:

Structure	Number of escape means
Galleries (bin decks)	Two
Tunnels of grain elevators constructed after November 14, 1988	Two
Tunnels of grain elevators constructed on or before November 14, 1988	One

[Statutory Authority: Chapter 49.17 RCW. 97-22-065, § 296-99-075, filed 11/3/97, effective 1/1/98; 88-23-054 (Order 88-25), § 296-99-075, filed 11/14/88.]

WAC 296-99-080 How must continuous-flow bulk raw grain dryers be equipped and installed? (1) The employer must ensure that all direct-heat grain dryers have automatic controls that:

(a) Shut off the fuel supply in case of power, flame, or ventilation airflow shutoff; and

(b) Stop the grain flow into the dryer if the dryer exhaust gets too hot.

(2) The employer must ensure that each direct-heat grain dryer installed after March 30, 1988, is:

(a) Located outside the grain elevator; or

(b) When located inside the grain elevator, protected by a fire or explosion suppression system; or

(c) Isolated by a structure with at least a one hour fire-resistance rating.

[Statutory Authority: Chapter 49.17 RCW. 97-22-065, § 296-99-080, filed 11/3/97, effective 1/1/98; 88-23-054 (Order 88-25), § 296-99-080, filed 11/14/88.]

WAC 296-99-085 What special requirements apply to inside bucket elevators? (1) The employer must prohibit jogging of a bucket elevator to free a choked leg.

"Jogging" means to start and stop drive motors repeatedly over short intervals.

(2) The employer must ensure that all belts and lagging purchased after March 30, 1988, are conductive and have a maximum surface electrical resistance of 300 megohms.

(3) The employer must ensure that all bucket elevators have safe access to the head pulley section for inspection of the head pulley, lagging, belt, and discharge throat. The boot section must also have safe access for its clean-out and inspection of the pulley and belt.

(4) The employer must:

(a) Mount bearings externally to the leg casing; or

(b) Have vibration and temperature monitoring; or

(c) Have other means to monitor the condition of bearings mounted inside or partially inside the leg casing.

(5) The employer must ensure that bucket elevators have a motion detection device that will stop the elevator if belt speed is reduced to less than eighty percent of normal operating speed.

(6) The employer must:

(a) Ensure that bucket elevators have a belt alignment monitoring device that will initiate an alarm to employees when the belt is not tracking properly; or

(b) Use a system to keep the belt tracking properly.

(7) Subsections (5) and (6) of this section do not apply to grain elevators with a permanent storage capacity of less than one million bushels, if daily visual inspection is made of bucket movement and belt tracking.

(8) Subsections (4), (5), and (6) of this section do not apply to the following:

(a) Bucket elevators with an operational fire and explosion suppression system capable of protecting at least the head and boot section of the bucket elevator; or

(b) Bucket elevators with pneumatic or other dust control systems or methods that keep the dust concentration inside the bucket elevator at least twenty-five percent below the lower explosive limit at all times during operations.

[Statutory Authority: Chapter 49.17 RCW. 97-22-065, § 296-99-085, filed 11/3/97, effective 1/1/98; 88-23-054 (Order 88-25), § 296-99-085, filed 11/14/88.]

WAC 296-99-090 Reserved.

[Statutory Authority: Chapter 49.17 RCW. 97-22-065, § 296-99-090, filed 11/3/97, effective 1/1/98; 88-23-054 (Order 88-25), § 296-99-090, filed 11/14/88.]

WAC 296-99-093 Reserved.

[Statutory Authority: Chapter 49.17 RCW. 97-22-065, § 296-99-093, filed 11/3/97, effective 1/1/98; 88-23-054 (Order 88-25), § 296-99-093, filed 11/14/88.]

WAC 296-99-095 Reserved.

[Statutory Authority: Chapter 49.17 RCW. 97-22-065, § 296-99-095, filed 11/3/97, effective 1/1/98; 88-23-054 (Order 88-25), § 296-99-095, filed 11/14/88.]

Chapter 296-104 WAC

BOARD OF BOILER RULES—SUBSTANTIVE

WAC

296-104-001	Administration—To what do these rules apply?
296-104-010	Administration—What are the definitions of terms used in this chapter?
296-104-015	Administration—When and where are the board meetings held?
296-104-017	Administration—How are rules affected if other rules are invalidated?
296-104-018	Administration—How are rules interpreted and revised?
296-104-020	Administration—What are the filing requirements for boilers and unfired pressure vessels before their installation/reinstallation?

296-104-021 Administration—What is the registration requirement for new standard boilers and unfired pressure vessels?
296-104-025 Administration—What are the notification requirements following an accident involving a boiler or pressure vessel?
296-104-030 Administration—What is the penalty for operation of unsafe boilers or unfired pressure vessels?
296-104-035 Administration—What are conflicts of interest for inspectors?
296-104-040 Administration—When should inspectors submit inspection reports and on what forms?
296-104-045 Administration—What are the insurance companies' responsibilities?
296-104-050 Administration—What are the requirements for a boiler inspector?
296-104-060 Administration—When shall an inspectors' Washington state commission be issued, suspended, or revoked?
296-104-065 Administration—How should an inspector obtain a Washington state commission?
296-104-100 Inspection—How often must boilers and unfired pressure vessels be inspected?
296-104-102 Inspection—What are the standards for in-service inspection?
296-104-105 Inspection—How much time is required for notification of inspection?
296-104-110 Inspection—What will be done when boilers or unfired pressure vessels are deemed unsafe or defective?
296-104-115 Inspection—What will be done when defective conditions are concealed by covering?
296-104-125 Inspection—What are the requirements for obtaining a certificate of inspection?
296-104-130 Inspection—When are inspection certificates valid?
296-104-135 Inspection—What are the requirements for restamping of boilers and unfired pressure vessels?
296-104-140 Inspection—How should a state stamp be applied?
296-104-145 Inspection—How are groups of vessels operating as a single unit classified?
296-104-150 Inspection—How are unfired steam boilers classified?
296-104-151 Inspection—What are the requirements for rental boilers?
296-104-155 Inspection—What preparations are necessary prior to internal inspections?
296-104-160 Inspection—What happens if a boiler or unfired pressure vessel is improperly prepared for inspection?
296-104-165 Inspection—When should coverings be removed for inspection?
296-104-170 Inspection—When are shop inspections required?
296-104-180 Inspection—How are radioactive systems inspected?
296-104-200 Construction—What are the standards for new construction?
296-104-205 Construction—What are the requirements for nonstandard new construction?
296-104-210 Construction—What are the requirements for construction of boilers and unfired pressure vessels of special design?
296-104-215 Construction—What are the requirements to use nonstandard boilers and unfired pressure vessels constructed prior to January 1, 1952?
296-104-220 Construction—What are the requirements to use nonstandard second hand boilers and unfired pressure vessels?
296-104-230 Construction—What are the testing requirements for new boilers or unfired pressure vessels exempted from code requirements for volume, pressure or temperature?
296-104-235 Construction—What are the requirements for code exempted boiler and unfired pressure vessel safety relief valves?
296-104-245 Construction—Combustible fluid heaters.
296-104-255 Installation—Clearance at top of boilers.
296-104-256 Installation—What are the required clearances for boilers?
296-104-260 Installation—What are the required clearances for unfired pressure vessels?
296-104-265 Installation—What are the requirements for unfired pressure vessels installed underground?
296-104-271 Installation—How does an owner, user, or installer obtain a variance from clearances?
296-104-273 Installation—What inspections are required for reinstalled standard boilers or unfired pressure vessels?
296-104-295 Installation—What are the requirements for an explosion door?
296-104-300 Installation—What control and limit devices are required on automatically fired boilers prior to June 1989?
296-104-301 Installation—What control and limit devices are required on automatically fired boilers after June 1989?
296-104-302 Installation—What control and limit devices are required on automatically fired boilers after December 1998?
296-104-303 Installation—What control and limit devices are required on automatically fired boilers after December 2004?
296-104-307 Installation—When are platforms around boilers required?
296-104-310 Installation—How many exits are required in boiler rooms?
296-104-316 Installation—What safety pressure relief devices are required on boilers and unfired pressure vessels?
296-104-320 Installation—Where should the discharge from safety pressure relief devices, blow offs and drains be directed?
296-104-325 Installation—What are the requirements for boiler and unfired pressure vessel supports?
296-104-330 Installation—What are the relief or safety valve requirements when pressure reducing valves are used?
296-104-405 Existing installation—How can the maximum allowable working pressure be established for nonstandard boilers or unfired pressure vessels?
296-104-502 Repairs—What are the requirements for nonnuclear boilers and unfired pressure vessel repairs and alterations?
296-104-510 Repairs—When a lap seam crack is discovered along a riveted longitudinal joint on a boiler or unfired pressure vessel, what action is required and what repairs are allowed?
296-104-515 Repairs—Do riveted repairs to boilers and unfired pressure vessels require prior approval?
296-104-520 Repairs—What are the requirements for repair of nonnuclear safety devices?
296-104-535 Repairs—What are the requirements for nuclear repairs/replacement?
296-104-540 Repairs—What are the requirements for nuclear repairs of safety devices?
296-104-700 What are the inspection fees—Examination fees—Certificate fees—Expenses?
296-104-701 What are the civil penalties?

DISPOSITION OF SECTIONS FORMERLY CODIFIED IN THIS CHAPTER

296-104-002 Approval by director. [Approval, filed 3/23/60.] Repealed by 99-22-026, filed 10/26/99, effective 11/26/99. Statutory Authority: RCW 70.79.030 and 70.79.040.

296-104-055 Administration—What are the examination fees? [Statutory Authority: RCW 70.79.030, 70.79.040, 70.79.150, 70.79.290, 70.79.330, 70.79.350, and chapter 70.79 RCW. 03-12-051, § 296-104-055, filed 5/30/03, effective 6/30/03; 02-12-021, § 296-104-055, filed 5/28/02, effective 6/28/02; 01-12-034, § 296-104-055, filed 5/29/01, effective 6/29/01. Statutory Authority: RCW 70.79.030 and 70.79.040. 99-22-026, § 296-104-055, filed 10/26/99, effective 11/26/99. Statutory Authority: RCW 70.79.040. 93-12-014, § 296-104-055, filed 5/21/93, effective 6/21/93. Statutory Authority: RCW 70.79.030 and 70.79.330. 82-24-025 (Order 82-36), § 296-104-055, filed 11/23/82, effective 1/1/83; Order 74-37, § 296-104-055, filed 11/8/74; Part II, § 8, filed 3/23/60.] Repealed by 04-01-194, filed 12/24/03, effective 1/24/04. Statutory Authority: RCW 70.79.030, 70.79.040, 70.79.150, 70.79.290, 70.79.330, 70.79.350, and chapter 70.79 RCW.

296-104-107 Inspection—Which unfired pressure vessels in places of public assembly are subject to these rules? [Statutory Authority: RCW 70.79.030 and 70.79.040. 97-20-109, § 296-104-107, filed 9/30/97, effective 10/31/97.] Repealed by 99-22-026, filed 10/26/99, effective 11/26/99. Statutory Authority: RCW 70.79.030 and 70.79.040.

296-104-120 Inspection—Condemned boilers or unfired pressure vessel. [Statutory Authority: RCW 70.79.040. 91-11-107, § 296-104-120, filed 5/22/91, effective 6/22/91; Part III, § 5, filed 3/23/60.] Repealed by 95-19-058,

filed 9/15/95, effective 10/16/95. Statutory Authority: RCW 70.79.030 and 70.79.040.

296-104-195 Pressure vessel clearances. [Statutory Authority: RCW 70.79.040. 90-04-009, § 296-104-195, filed 1/26/90, effective 2/26/90.] Repealed by 96-21-081, filed 10/16/96, effective 11/16/96. Statutory Authority: RCW 70.79.030 and 70.79.040.

296-104-201 Inspection of systems—Standard for water chillers. [Statutory Authority: RCW 70.79.030. 80-14-015 (Order 80-12), § 296-104-201, filed 9/23/80.] Repealed by 86-01-088 (Order 85-26), filed 12/19/85. Statutory Authority: RCW 70.79.040 and 70.79.050.

296-104-225 Inspection of systems—Reinstalled boiler or unfired pressure vessel. [Part IV, § 6, filed 3/23/60.] Repealed by 96-21-081, filed 10/16/96, effective 11/16/96. Statutory Authority: RCW 70.79.030 and 70.79.040.

296-104-240 Construction—When are piping components considered unfired pressure vessels? [Statutory Authority: RCW 70.79.030, 70.79.040 and chapter 70.79 RCW. 00-21-024, § 296-104-240, filed 10/10/00, effective 11/13/00. Statutory Authority: RCW 70.79.030 and 70.79.040. 96-21-081, § 296-104-240, filed 10/16/96, effective 11/16/96; Part IV, § 9, filed 3/23/60.] Repealed by 02-23-036, filed 11/13/02, effective 12/14/02. Statutory Authority: RCW 70.79.030, 70.79.040, 70.79.150, 70.79.290, 70.79.330, 70.79.350, and chapter 70.79 RCW.

296-104-250 Inspection of systems—Hot water heating systems. [Part IV, § 11, filed 3/23/60.] Repealed by 78-03-057 (Order 78-3), filed 2/22/78. Statutory Authority: RCW 70.79.030.

296-104-256 Installation—What inspections are required for reinstalled standard boilers or unfired pressure vessels? [Statutory Authority: RCW 70.79.030, 70.79.040, 70.79.150, 70.79.290, 70.79.330, 70.79.350, and chapter 70.79 RCW. 01-24-061, § 296-104-256, filed 11/30/01, effective 12/31/01. Statutory Authority: RCW 70.79.030 and 70.79.040. 96-21-081, § 296-104-256, filed 10/16/96, effective 11/16/96.] Decodified by 02-23-036, filed 11/13/02, effective 12/14/02. Statutory Authority: RCW 70.79.030, 70.79.040, 70.79.150, 70.79.290, 70.79.330, 70.79.350, and chapter 70.79 RCW. Recodified as RCW 296-104-273.

296-104-260 Installation—Clearance front, back and sides. [Statutory Authority: RCW 70.79.030 and 70.79.040. 96-21-081, § 296-104-260, filed 10/16/96, effective 11/16/96. Statutory Authority: Chapter 70.79 RCW. 89-15-025 (Order 89-05), § 296-104-260, filed 7/13/89, effective 8/13/89; Part IV, § 13, filed 3/23/60.] Decodified and amended by 02-23-036, filed 11/13/02, effective 12/14/02. Statutory Authority: RCW 70.79.030, 70.79.040, 70.79.150, 70.79.290, 70.79.330, 70.79.350, and chapter 70.79 RCW. Recodified as RCW 296-104-256.

296-104-265 Installation—What control and limit devices are required on boilers? [Statutory Authority: RCW 70.79.030, 70.79.040, 70.79.150, 70.79.290, 70.79.330, 70.79.350, and chapter 70.79 RCW. 01-24-061, § 296-104-265, filed 11/30/01, effective 12/31/01. Statutory Authority: RCW 70.79.030, 70.79.040 and chapter 70.79 RCW. 00-21-024, § 296-104-265, filed 10/10/00, effective 11/13/00. Statutory Authority: RCW 70.79.030 and 70.79.040. 98-22-024, § 296-104-265, filed 10/28/98, effective 11/28/98; 97-20-109, § 296-104-265, filed 9/30/97, effective 10/31/97. Statutory Authority: RCW 70.79.240. 88-01-064 (Order 87-25), § 296-104-265, filed 12/17/87; Part IV, § 14, filed 3/23/60.] Decodified by 02-23-036, filed 11/13/02, effective 12/14/02. Statutory Authority: RCW 70.79.030, 70.79.040, 70.79.150, 70.79.290, 70.79.330, 70.79.350, and chapter 70.79 RCW. Recodified as RCW 296-104-300.

296-104-270 Installation—What are the requirements for an explosion door? [Statutory Authority: RCW 70.79.030 and 70.79.040. 97-20-109, § 296-104-270, filed 9/30/97, effective 10/31/97; Part IV, § 15, filed 3/23/60.] Decodified by 02-23-036, filed 11/13/02, effective 12/14/02. Statutory Authority: RCW 70.79.030, 70.79.040, 70.79.150, 70.79.290, 70.79.330, 70.79.350, and chapter 70.79 RCW. Recodified as RCW 296-104-295.

296-104-273 Installation—Pressure vessel clearances. [Statutory Authority: RCW 70.79.030 and 70.79.040. 96-21-081, § 296-104-273, filed 10/16/96, effective 11/16/96.] Decodified and amended by 02-23-036, filed 11/13/02, effective 12/14/02. Statutory Authority: RCW 70.79.030, 70.79.040, 70.79.150, 70.79.290, 70.79.330, 70.79.350, and chapter 70.79 RCW. Recodified as RCW 296-104-260.

296-104-275 Inspection of systems—Hydro-pneumatic tanks. [Part IV, § 16, filed 3/23/60.] Repealed by 78-03-057 (Order 78-3), filed 2/22/78. Statutory Authority: RCW 70.79.030.

296-104-280 Inspection of systems—Electric steam generators. [Part IV, § 17, filed 3/23/60.] Repealed by 78-03-057 (Order 78-3), filed 2/22/78. Statutory Authority: RCW 70.79.030.

296-104-285 Unfired pressure vessels in places of public assembly. [Statutory Authority: RCW 70.79.030. 78-03-057 (Order 78-3), § 296-104-285, filed 2/22/78.] Repealed by 99-08-049, filed 4/1/99, effective 5/2/99. Statutory Authority: RCW 70.79.030 and 70.79.040.

296-104-300 Installation—When do I need to provide platforms around boilers? [Statutory Authority: RCW 70.79.030 and 70.79.040. 97-20-109, § 296-104-300, filed 9/30/97, effective 10/31/97; Part V, § 1, filed 3/23/60.] Decodified by 02-23-036, filed 11/13/02, effective 12/14/02. Statutory Authority: RCW 70.79.030, 70.79.040, 70.79.150, 70.79.290, 70.79.330, 70.79.350, and chapter 70.79 RCW. Recodified as 296-104-307.

296-104-305 Installation—How many exits are required in boiler rooms? [Statutory Authority: RCW 70.79.030 and 70.79.040. 97-20-109, § 296-104-305, filed 9/30/97, effective 10/31/97; Part V, § 2, filed 3/23/60.] Decodified by 02-23-036, filed 11/13/02, effective 12/14/02. Statutory Authority: RCW 70.79.030, 70.79.040, 70.79.150, 70.79.290, 70.79.330, 70.79.350, and chapter 70.79 RCW. Recodified as 296-104-310.

296-104-307 Installation—What safety pressure relief devices are required on boilers and pressure vessels? [Statutory Authority: RCW 70.79.030, 70.79.040 and chapter 70.79 RCW. 00-21-024, § 296-104-307, filed 10/10/00, effective 11/13/00. Statutory Authority: RCW 70.79.030 and 70.79.040. 98-22-024, § 296-104-307, filed 10/28/98, effective 11/28/98.] Decodified by 02-23-036, filed 11/13/02, effective 12/14/02. Statutory Authority: RCW 70.79.030, 70.79.040, 70.79.150, 70.79.290, 70.79.330, 70.79.350, and chapter 70.79 RCW. Recodified as 296-104-316.

296-104-310 Installation—Where should the discharge from safety valves, blow offs and drains be directed? [Statutory Authority: RCW 70.79.030 and 70.79.040. 98-22-024, § 296-104-310, filed 10/28/98, effective 11/28/98; 97-20-109, § 296-104-310, filed 9/30/97, effective 10/31/97; Part V, § 3, filed 3/23/60.] Decodified by 02-23-036, filed 11/13/02, effective 12/14/02. Statutory Authority: RCW 70.79.030, 70.79.040, 70.79.150, 70.79.290, 70.79.330, 70.79.350, and chapter 70.79 RCW. Recodified as RCW 296-104-320.

296-104-315 New installations—Blow off tanks. [Statutory Authority: RCW 70.79.030. 78-03-057 (Order 78-3), § 296-104-315, filed 2/22/78; Part V, § 4, filed 3/23/60.] Repealed by 89-15-025 (Order 89-05), filed 7/13/89, effective 8/13/89. Statutory Authority: Chapter 70.79 RCW.

296-104-320 Installation—What are the requirements for underground installations? [Statutory Authority: RCW 70.79.030 and 70.79.040. 97-20-109, § 296-104-320, filed 9/30/97, effective 10/31/97; Part V, § 5, filed 3/23/60.] Decodified by 02-23-036, filed 11/13/02, effective 12/14/02. Statutory Authority: RCW 70.79.030, 70.79.040, 70.79.150, 70.79.290, 70.79.330, 70.79.350, and chapter 70.79 RCW. Recodified as RCW 296-104-265.

296-104-400 Existing installations—Stamping of existing boilers and unfired pressure vessels. [Statutory Authority: RCW 70.79.040. 90-20-029, § 296-104-400, filed 9/24/90, effective 10/25/90; Part VI, § 1, filed 3/23/60.] Repealed by 97-20-109, filed 9/30/97, effective 10/31/97. Statutory Authority: RCW 70.79.030 and 70.79.040.

296-104-410 Existing installations—Noncode steel heating boilers. [Part VI, § 3, filed 3/23/60.] Repealed by 97-20-109, filed 9/30/97, effective 10/31/97. Statutory Authority: RCW 70.79.030 and 70.79.040.

296-104-415 Existing installations—Noncode cast iron boilers. [Part VI, § 4, filed 3/23/60.] Repealed by 97-20-109, filed 9/30/97, effective 10/31/97. Statutory Authority: RCW 70.79.030 and 70.79.040.

296-104-500	Nonnuclear repairs. [Statutory Authority: RCW 70.79.040. 93-12-014, § 296-104-500, filed 5/21/93, effective 6/21/93; 92-11-070, § 296-104-500, filed 5/20/92, effective 6/20/92. Statutory Authority: RCW 70.79.030. 86-04-059 (Order 86-01), § 296-104-500, filed 2/4/86. Statutory Authority: RCW 70.79.030 and 70.79.330. 84-21-012 (Order 84-20), § 296-104-500, filed 10/5/84; Part VII, § 1, filed 3/23/60.] Repealed by 94-21-002, filed 10/5/94, effective 11/5/94. Statutory Authority: RCW 70.79.040.
296-104-501	Nonnuclear alterations. [Statutory Authority: RCW 70.79.040. 93-12-014, § 296-104-501, filed 5/21/93, effective 6/21/93; 92-11-070, § 296-104-501, filed 5/20/92, effective 6/20/92. Statutory Authority: RCW 70.79.030. 86-04-059 (Order 86-01), § 296-104-501, filed 2/4/86.] Repealed by 94-21-002, filed 10/5/94, effective 11/5/94. Statutory Authority: RCW 70.79.040.
296-104-505	Repairs—Repairs by fusion welding. [Part VII, § 2, filed 3/23/60.] Repealed by 94-21-002, filed 10/5/94, effective 11/5/94. Statutory Authority: RCW 70.79.040.
296-104-525	Repairs—Hydrostatic pressure tests. [Part VII, § 6, filed 3/23/60.] Repealed by 98-22-024, filed 10/28/98, effective 11/28/98. Statutory Authority: RCW 70.79.030 and 70.79.040.
296-104-530	Repairs—Can air or vapor testing be performed? [Statutory Authority: RCW 70.79.030 and 70.79.040. 98-22-024, § 296-104-530, filed 10/28/98, effective 11/28/98. Statutory Authority: RCW 70.79.040. 92-11-070, § 296-104-530, filed 5/20/92, effective 6/20/92; Part VII, § 7, filed 3/23/60.] Repealed by 04-01-194, filed 12/24/03, effective 1/24/04. Statutory Authority: RCW 70.79.030, 70.79.040, 70.79.150, 70.79.290, 70.79.330, 70.79.350, and chapter 70.79 RCW.
296-104-600	General requirements—Conditions not covered by these rules. [Part VIII, § 1, filed 3/23/60.] Repealed by 98-22-024, filed 10/28/98, effective 11/28/98. Statutory Authority: RCW 70.79.030 and 70.79.040.
296-104-800	Inspection of systems subject to radioactivity. [Statutory Authority: RCW 70.79.240. 88-01-064 (Order 87-25), § 296-104-800, filed 12/17/87.] Repealed by 98-22-024, filed 10/28/98, effective 11/28/98. Statutory Authority: RCW 70.79.030 and 70.79.040.
296-104-801	Nuclear repairs/replacement. [Statutory Authority: RCW 70.79.040. 91-11-106, § 296-104-801, filed 5/22/91, effective 6/22/91.] Repealed by 98-22-024, filed 10/28/98, effective 11/28/98. Statutory Authority: RCW 70.79.030 and 70.79.040.
296-104-805	Nuclear repairs—Safety devices. [Statutory Authority: RCW 70.79.040. 91-11-106, § 296-104-805, filed 5/22/91, effective 6/22/91.] Repealed by 98-22-024, filed 10/28/98, effective 11/28/98. Statutory Authority: RCW 70.79.030 and 70.79.040.

WAC 296-104-001 Administration—To what do these rules apply? The following rules and regulations apply to all boilers and unfired pressure vessels except those exempt under RCW 70.79.080. Boilers and unfired pressure vessels listed under RCW 70.79.090 are exempt from inspection and fees, but shall comply with all rules for construction, installation, repairs and general requirements.

[Statutory Authority: RCW 70.79.030 and 70.79.040. 99-22-026, § 296-104-001, filed 10/26/99, effective 11/26/99; Promulgation, filed 3/23/60.]

WAC 296-104-010 Administration—What are the definitions of terms used in this chapter? "Agriculture purposes" shall mean any act performed on a farm in production of crops or livestock, and shall include the storage of such crops and livestock in their natural state, but shall not be construed to include the processing or sale of crops or livestock.

"Attendant" shall mean the person in charge of the operation of a boiler or unfired pressure vessel.

"Automatic operation of a boiler" shall mean automatic unattended control of feed water and fuel in order to maintain the pressure and temperature within the limits set. Controls must be such that the operation follows the demand without interruption. Manual restart may be required when the burner is off because of low water, flame failure, power failure, high temperatures or pressures.

"Board of boiler rules" or **"board"** shall mean the board created by law and empowered under RCW 70.79.010.

"Boiler and unfired pressure vessel installation/reinstallation permit," shall mean a permit approved by the chief inspector before starting installation or reinstallation of any boiler and unfired pressure vessel within the jurisdiction of Washington.

Owner/user inspection agency's, and Washington specials are exempt from "boiler and unfired pressure vessel installation/reinstallation permit."

"Boilers and/or unfired pressure vessels" - below are definitions for types of boilers and unfired pressure vessels used in these regulations:

- **"Condemned boiler or unfired pressure vessel"** shall mean a boiler or unfired pressure vessel that has been inspected and declared unsafe or disqualified for further use by legal requirements and appropriately marked by an inspector.
- **"Hot water heater"** shall mean a closed vessel designed to supply hot water for external use to the system. All vessels must be listed by a nationally recognized testing agency and shall be protected with an approved temperature and pressure safety relief valve and shall not exceed any of the following limits:
  - * Pressure of 160 psi (1100 kpa);
  - * Temperature of 210 degrees F (99°C);
  - * Capacity of 120 U.S. gallons (454 liters);
  - * Input of 200,000 BTU/hr (58.58 kw). Note that if input exceeds 200,000 BTU/hr (58.58 kw), other terms defined in this section may apply.
  - * Hot water heaters exceeding 200,000 BTU/hr (58.58 kw) must be ASME code stamped.
- **"Low pressure heating boiler"** shall mean a steam or vapor boiler operating at a pressure not exceeding 15 psig or a boiler in which water or other fluid is heated and intended for operation at pressures not exceeding 160 psig or temperatures not exceeding 250 degrees F by the direct application of energy from the combustion of fuels or from electricity, solar or nuclear energy including lined potable water heaters.
- **"Nonstandard boiler or unfired pressure vessel"** shall mean a boiler or unfired pressure vessel that does not bear marking of the codes adopted in WAC 296-104-200.
- **"Power boiler"** shall mean a boiler in which steam or other vapor is generated at a pressure of more than 15 psig for use external to itself or a boiler in which water or other fluid is heated and intended for operation at pressures in excess of 160 psig and/or temperatures in excess of 250 degrees F by the direct application of energy from the combustion of fuels or from electricity, solar or nuclear energy.
- **"Reinstalled boiler or unfired pressure vessel"** shall mean a boiler or unfired pressure vessel removed from its original setting and reset at the

same location or at a new location without change of ownership.

- **"Rental boiler"** shall mean any power or low pressure heating boiler that is under a rental contract between owner and user.
- **"Second hand boiler or unfired pressure vessel"** shall mean a boiler or unfired pressure vessel of which both the location and ownership have changed after primary use.
- **"Standard boiler or unfired pressure vessel"** shall mean a boiler or unfired pressure vessel which bears the marking of the codes adopted in WAC 296-104-200.
- **"Unfired pressure vessel"** shall mean a closed vessel under pressure excluding:

* Fired process tubular heaters;

* Pressure containers which are integral parts of components of rotating or reciprocating mechanical devices where the primary design considerations and/or stresses are derived from the functional requirements of the device;

* Piping whose primary function is to transport fluids from one location to another;

* Those vessels defined as low pressure heating boilers or power boilers.

- **"Unfired steam boiler"** shall mean a pressure vessel in which steam is generated by an indirect application of heat. It shall not include pressure vessels known as evaporators, heat exchangers, or vessels in which steam is generated by the use of heat resulting from the operation of a processing system containing a number of pressure vessels, such as used in the manufacture of chemical and petroleum products, which will be classed as unfired pressure vessels.

"Certificate of competency" shall mean a certificate issued by the Washington state board of boiler rules to a person who has passed the tests as set forth in WAC 296-104-050.

"Code, API-510" shall mean the Pressure Vessel Inspection Code of the American Petroleum Institute with addenda and revisions, thereto made and approved by the institute which have been adopted by the board of boiler rules in accordance with the provisions of RCW 70.79.030.

"Code, ASME" shall mean the boiler and pressure vessel code of the American Society of Mechanical Engineers with addenda thereto made and approved by the council of the society which have been adopted by the board of boiler rules in accordance with the provisions of RCW 70.79.030.

"Code, NBIC" shall mean the National Board Inspection Code of the National Board of Boiler and Pressure Vessel Inspectors with addenda and revisions, thereto made and approved by the National Board of Boiler and Pressure Vessel Inspectors and adopted by the board of boiler rules in accordance with the provisions of RCW 70.79.030.

"Commission" shall mean an annual commission card issued to a person in the employ of Washington state, an insurance company or a company owner/user inspection agency holding a Washington state certificate of competency which authorizes them to perform inspections of boilers and/or unfired pressure vessels.

"Department" as used herein shall mean the department of labor and industries of the state of Washington.

"Director" shall mean the director of the department of labor and industries.

"Domestic and/or residential purposes" shall mean serving a private residence or an apartment house of less than six families.

"Existing installations" shall mean any boiler or unfired pressure vessel constructed, installed, placed in operation, or contracted for before January 1, 1952.

"Inspection, external" shall mean an inspection made while a boiler or unfired pressure vessel is in operation and includes the inspection and demonstration of controls and safety devices required by these rules.

"Inspection, internal" shall mean an inspection made when a boiler or unfired pressure vessel is shut down and handholes, manholes, or other inspection openings are open or removed for examination of the interior. An external ultrasonic examination of unfired pressure vessels less than 36" inside diameter shall constitute an internal inspection.

"Inspector" shall mean the chief boiler inspector, a deputy inspector, or a special inspector.

- **"Chief inspector"** shall mean the inspector appointed under RCW 70.79.100 who serves as the secretary to the board without a vote.
- **"Deputy inspector"** shall mean an inspector appointed under RCW 70.79.120.
- **"Special inspector"** shall mean an inspector holding a Washington commission identified under RCW 70.79.130.

"Nationwide engineering standard" shall mean a nationally accepted design method, formulae and practice acceptable to the board.

"Owner" or **"user"** shall mean a person, firm, or corporation owning or operating any boiler or unfired pressure vessel within the state.

"Owner/user inspection agency" shall mean an owner or user of boilers and/or pressure vessels that maintains an established inspection department, whose organization and inspection procedures meet the requirements of a nationally recognized standard acceptable to the department.

"Place of public assembly" or **"assembly hall"** shall mean a building or portion of a building used for the gathering together of 50 or more persons for such purposes as deliberation, education, instruction, worship, entertainment, amusement, drinking, or dining or waiting transportation. This shall also include child care centers (those agencies which operate for the care of thirteen or more children), public and private hospitals, nursing and boarding homes.

"Special design" shall mean a design using nationwide engineering standards other than the codes adopted in WAC 296-104-200 or other than allowed in WAC 296-104-230.

[Statutory Authority: Chapter 70.79 RCW. 04-21-069, § 296-104-010, filed 10/19/04, effective 1/1/05. Statutory Authority: RCW 70.79.030, 70.79.040, 70.79.150, 70.79.290, 70.79.330, 70.79.350, and chapter 70.79 RCW. 04-01-194, § 296-104-010, filed 12/24/03, effective 1/24/04; 02-23-036, § 296-104-010, filed 11/13/02, effective 12/14/02; 01-24-061, § 296-104-010, filed 11/30/01, effective 12/31/01. Statutory Authority: RCW 70.79.030, 70.79.040 and chapter 70.79 RCW. 00-21-024, § 296-104-010, filed 10/10/00, effective 11/13/00. Statutory Authority: RCW 70.79.030 and 70.79.040. 99-22-026, § 296-104-010, filed 10/26/99, effective 11/26/99; 98-22-024, § 296-104-010, filed 10/28/98, effective 11/28/98; 96-21-081, § 296-104-010, filed 10/16/96, effective 11/16/96. Statutory Authority: RCW 70.79.040. 94-21-002, § 296-104-010, filed 10/5/94, effective 11/5/94; 93-12-014, § 296-104-010, filed 5/21/93, effective 6/21/93; 92-11-070, § 296-104-010, filed 5/20/92, effective 6/20/92. Statutory Authority: RCW 70.79.240. 88-01-064 (Order 87-25), § 296-104-010, filed 12/17/87. Statutory Authority: RCW 70.79.040 and 70.79.050. 86-01-088 (Order 85-26), §

296-104-010, filed 12/19/85; Order 72-11, § 296-104-010, filed 7/7/72; Part I, filed 3/23/60.]

WAC 296-104-015 Administration—When and where are the board meetings held? The board of boiler rules shall hold its regular meetings in January, March, May, September and November of each year. The time, place, and date of each regular meeting shall be set by the chairman of the board and published annually. Special meetings may be called by the chair.

[Statutory Authority: RCW 70.79.030 and 70.79.040. 99-22-026, § 296-104-015, filed 10/26/99, effective 11/26/99; 95-19-058, § 296-104-015, filed 9/15/95, effective 10/16/95. Statutory Authority: RCW 70.79.040. 91-11-107, § 296-104-015, filed 5/22/91, effective 6/22/91. Statutory Authority: RCW 70.79.050. 90-07-082, § 296-104-015, filed 3/21/90, effective 4/21/90. Statutory Authority: RCW 70.79.040 and 70.79.050. 86-01-088 (Order 85-26), § 296-104-015, filed 12/19/85; Order 72-11, § 296-104-015, filed 7/7/72.]

WAC 296-104-017 Administration—How are rules affected if other rules are invalidated? Should any section, subsection, sentence, clause, phrase, provision or exemption of these rules be declared unconstitutional or invalid for any reason, such invalidity shall not affect the remaining portion or provisions.

[Statutory Authority: RCW 70.79.030 and 70.79.040. 98-22-024, § 296-104-017, filed 10/28/98, effective 11/28/98.]

WAC 296-104-018 Administration—How are rules interpreted and revised? Stakeholders may request clarifications and interpretations of these rules by contacting the chief inspector. Interpretations will be brought to the board if the inquirer is aggrieved by the interpretation of the chief inspector (RCW 70.79.360). The board will consider written requests for interpretations and revisions to these definitions, rules, and regulations. Inquiries shall be limited to requests for interpretation of the rules or to proposed revisions to the existing rules and shall be submitted in the following format:

(1) Scope. Identify a single rule or closely related rules that are in dispute.

(2) Background. State the purpose of the inquiry, which should be either to obtain an interpretation or to propose a revision to existing rules. Provide concise information needed for the board's understanding of the inquiry, including references to the WAC section as well as other code and/or standards paragraphs.

(3) Inquiry structure. Provide statements in a condensed and precise question format and, where appropriate, compose in such a way that "yes" or "no" (perhaps with provisos) would be an acceptable reply.

(4) Proposed reply. State what it is believed the rule requires. If in the inquirer's opinion a revision to the definitions, rules, and regulations is needed, recommended wording should be provided.

Inquiries shall be submitted by mail to:
Board of Boiler Rules
% Chief Inspector
Department of Labor & Industries
Boiler Section
P.O. Box 44410
Olympia, WA 98504-4410

or

Inquiries shall be submitted by delivery to:
Board of Boiler Rules
% Chief Inspector
Department of Labor & Industries
Boiler Section
7273 Linderson Way SW
Tumwater, WA 98501

[Statutory Authority: RCW 70.79.030 and 70.79.040. 99-22-026, § 296-104-018, filed 10/26/99, effective 11/26/99. Statutory Authority: RCW 70.79.040. 92-11-070, § 296-104-018, filed 5/20/92, effective 6/20/92.]

WAC 296-104-020 Administration—What are the filing requirements for boilers and unfired pressure vessels before their installation/reinstallation? A "boiler and pressure vessel installation/reinstallation permit," as defined in WAC 296-104-010 shall be submitted by the owner or agent and approved by the chief inspector.

[Statutory Authority: RCW 70.79.030, 70.79.040, 70.79.150, 70.79.290, 70.79.330, 70.79.350, and chapter 70.79 RCW. 02-23-036, § 296-104-020, filed 11/13/02, effective 12/14/02; 01-24-061, § 296-104-020, filed 11/30/01, effective 12/31/01. Statutory Authority: RCW 70.79.030 and 70.79.040. 99-22-026, § 296-104-020, filed 10/26/99, effective 11/26/99; 95-19-058, § 296-104-020, filed 9/15/95, effective 10/16/95; Order 74-37, § 296-104-020, filed 11/8/74; Part II, § 1, filed 3/23/60.]

WAC 296-104-021 Administration—What is the registration requirement for new standard boilers and unfired pressure vessels? Manufacturers' data report for new "standard boilers and unfired pressure vessels" shall be registered with the National Board of Boiler and Pressure Vessel Inspectors.

[Statutory Authority: RCW 70.79.030, 70.79.040, 70.79.150, 70.79.290, 70.79.330, 70.79.350, and chapter 70.79 RCW. 02-23-036, § 296-104-021, filed 11/13/02, effective 12/14/02.]

WAC 296-104-025 Administration—What are the notification requirements following an accident involving a boiler or pressure vessel? When an accident occurs which renders a boiler or unfired pressure vessel inoperative, the owner or user shall notify the chief inspector, and submit a detailed report of the accident. In cases of accidents, such as explosions or those resulting in personal injury, notice to the chief inspector shall be given immediately by telephone or electronic means designed to assure its earliest possible receipt. Neither the boiler or unfired pressure vessel nor any parts thereof shall be removed or disturbed before an inspection has been made by the chief inspector, or his designee except for the purpose of saving life or limiting consequential damage. The inspector making the investigation and inspection shall report to the chief inspector as soon as possible. The boiler or pressure vessel owner shall be responsible for all costs of the department's investigation.

[Statutory Authority: RCW 70.79.030 and 70.79.040. 99-22-026, § 296-104-025, filed 10/26/99, effective 11/26/99; 96-21-081, § 296-104-025, filed 10/16/96, effective 11/16/96; 95-19-058, § 296-104-025, filed 9/15/95, effective 10/16/95; Part II, § 2, filed 3/23/60.]

WAC 296-104-030 Administration—What is the penalty for operation of unsafe boilers or unfired pressure vessels? In the event that a boiler or unfired pressure vessel is unsafe to operate, the inspection certificate shall be

suspended. Any person, firm, partnership, or corporation causing such objects to be operated under pressure without a valid certificate of inspection shall be in violation of RCW 70.79.320 and subject to the penalties specified in WAC 296-104-701.

[Statutory Authority: RCW 70.79.030 and 70.79.040. 99-22-026, § 296-104-030, filed 10/26/99, effective 11/26/99; 95-19-058, § 296-104-030, filed 9/15/95, effective 10/16/95; Part II, § 3, filed 3/23/60.]

WAC 296-104-035 Administration—What are conflicts of interest for inspectors? Inspectors commissioned by the state of Washington shall not engage in the sale of any service, article, or device or promote any other activity for personal gain relating to boilers or unfired pressure vessels or their appurtenances.

[Statutory Authority: RCW 70.79.030 and 70.79.040. 99-22-026, § 296-104-035, filed 10/26/99, effective 11/26/99; 95-19-058, § 296-104-035, filed 9/15/95, effective 10/16/95; Part II, § 4, filed 3/23/60.]

WAC 296-104-040 Administration—When should inspectors submit inspection reports and on what forms? Inspectors shall submit reports of inspections of boilers and unfired pressure vessels on appropriate forms or media approved by the chief inspector. Routine reports of inspections shall be submitted within thirty days of inspection. Reports of reinspection after suspension of an inspection certificate shall be submitted by an inspector as soon as notice of corrective action has been received.

[Statutory Authority: RCW 70.79.030, 70.79.040, 70.79.150, 70.79.290, 70.79.330, 70.79.350, and chapter 70.79 RCW. 01-24-061, § 296-104-040, filed 11/30/01, effective 12/31/01. Statutory Authority: RCW 70.79.030 and 70.79.040. 99-22-026, § 296-104-040, filed 10/26/99, effective 11/26/99; 95-19-058, § 296-104-040, filed 9/15/95, effective 10/16/95; Order 74-37, § 296-104-040, filed 11/8/74; Part II, § 5, filed 3/23/60.]

WAC 296-104-045 Administration—What are the insurance companies' responsibilities? All insurance companies shall notify the chief inspector within thirty days of all boiler and/or unfired pressure vessel risks written, canceled, not renewed or suspended because of unsafe conditions. Special inspectors shall perform all in-service inspections of boilers and unfired pressure vessels insured by their employer. After a repair or alteration the in-service inspector is responsible to assure that proper documentation is completed and submitted to the department in accordance with the rules of the National Board Inspection Code (NBIC) as adopted in WAC 296-104-102.

[Statutory Authority: RCW 70.79.030, 70.79.040, 70.79.150, 70.79.290, 70.79.330, 70.79.350, and chapter 70.79 RCW. 01-24-061, § 296-104-045, filed 11/30/01, effective 12/31/01. Statutory Authority: RCW 70.79.030 and 70.79.040. 99-22-026, § 296-104-045, filed 10/26/99, effective 11/26/99; 95-19-058, § 296-104-045, filed 9/15/95, effective 10/16/95; Part II, § 6, filed 3/23/60.]

WAC 296-104-050 Administration—What are the requirements for a boiler inspector? In order to qualify as a prospective National Board Commissioned Inspector an applicant shall meet the minimum requirements as set forth in the national board's "Rules for Commissioned Inspectors," NB263, Revision 8 (4/02).

Application for examination for certificate of competency shall be in writing upon a form to be furnished by the chief inspector stating the school and education of the applicant, a list of employers, period of employment and position held with each employer. Applications containing willful falsification or untruthful statements shall be rejected.

If the applicant's history and experience meet with the approval of the board of boiler rules, the candidate shall be given the national board examination and the Washington state examination. If the applicant is accepted on the merits of these examinations or as provided for in WAC 296-104-065, a certificate of competency will be issued by the chief inspector.

Examinations shall be held at locations and times when considered necessary by the board of boiler rules. The examinations may be offered four times each year, namely, the first Wednesday and following Thursday of the months of March, June, September and December. Special examinations may be held when considered necessary by the board of boiler rules.

[Statutory Authority: Chapter 70.79 RCW. 04-21-069, § 296-104-050, filed 10/19/04, effective 1/1/05. Statutory Authority: RCW 70.79.030, 70.79.040, 70.79.150, 70.79.290, 70.79.330, 70.79.350, and chapter 70.79 RCW. 04-01-194, § 296-104-050, filed 12/24/03, effective 1/24/04; 02-23-036, § 296-104-050, filed 11/13/02, effective 12/14/02. Statutory Authority: RCW 70.79.030 and 70.79.040. 99-22-026, § 296-104-050, filed 10/26/99, effective 11/26/99. Statutory Authority: RCW 70.79.040. 94-21-002, § 296-104-050, filed 10/5/94, effective 11/5/94. Statutory Authority: Chapter 70.79 RCW. 89-15-025 (Order 89-05), § 296-104-050, filed 7/13/89, effective 8/13/89. Statutory Authority: RCW 70.79.030. 78-03-057 (Order 78-3), § 296-104-050, filed 2/22/78; Part II, § 7, filed 3/23/60.]

WAC 296-104-060 Administration—When shall an inspectors' Washington state commission be issued, suspended, or revoked? The chief inspector shall issue a commission as a deputy or special inspector in accordance with RCW 70.79.120 and 70.79.130.

The deputy inspector commission shall be held by the chief inspector. The deputy inspector commission shall be valid for one year and may be renewed annually at the request of the chief inspector. The special inspector commission shall be held at the home office of the employing company and shall be valid for one year and may be renewed annually at the request of the employing company. Inspectors shall carry identifying commission cards while they are inspecting. The state or employing company shall return the commission and the identifying commission card at once to the chief inspector when the inspector to whom the commission was issued is no longer in its employ, or at the request of the chief inspector.

An inspector's commission may be suspended or revoked in accordance with RCW 70.79.180.

[Statutory Authority: RCW 70.79.030, 70.79.040, 70.79.150, 70.79.290, 70.79.330, 70.79.350, and chapter 70.79 RCW. 04-01-194, § 296-104-060, filed 12/24/03, effective 1/24/04; 02-23-036, § 296-104-060, filed 11/13/02, effective 12/14/02; 02-12-021, § 296-104-060, filed 5/28/02, effective 6/28/02; 01-24-061, § 296-104-060, filed 11/30/01, effective 12/31/01. Statutory Authority: RCW 70.79.030 and 70.79.040. 99-22-026, § 296-104-060, filed 10/26/99, effective 11/26/99. Statutory Authority: RCW 70.79.040. 94-21-002, § 296-104-060, filed 10/5/94, effective 11/5/94. Statutory Authority: RCW 70.79.030 and 70.79.330. 82-24-025 (Order 82-36), § 296-104-060, filed 11/23/82, effective 1/1/83; Order 74-37, § 296-104-060, filed 11/8/74; Part II, § 9, filed 3/23/60.]

WAC 296-104-065 Administration—How should an inspector obtain a Washington state commission? A commission as a deputy inspector of boilers and/or unfired pres-

sure vessels may be issued by the chief inspector to an inspector complying with WAC 296-104-065 (1) or (4). Upon the request of a boiler insurance company authorized to insure and insuring against loss from explosion of boilers and/or unfired pressure vessels in this state, or a company with an owner/user inspection agency, a commission as a special inspector of boilers and/or unfired pressure vessels shall be issued by the chief inspector to an inspector in the employ and supervision of such company provided the inspector has had the experience prescribed in chapter 70-79 RCW and complies with one of the following:

(1) Passed an examination covering the Washington state boilers and unfired pressure vessels law, chapters 70.79 RCW and 296-104 WAC; and holds a national board commission.

(2) Is certified by the American Petroleum Institute in accordance with API-510 for pressure vessel inspection, having passed an examination covering the Washington state boilers and unfired pressure vessels law, chapters 70.79 RCW and 296-104 WAC.

(3) Is certified by the American Petroleum Institute in accordance with API-510 for pressure vessel inspection, and specifically and temporarily in the direct employ of an owner/user inspection agency as set forth in RCW 70.79.130. This inspector shall be exempted from the state examination requirement in WAC 296-104-065(2).

(4) Is an inspector holding the national board "A" endorsement and performs shop inspections only. This inspector shall be exempt from the exam requirement set forth in WAC 296-104-065(1).

[Statutory Authority: RCW 70.79.030, 70.79.040, 70.79.150, 70.79.290, 70.79.330, 70.79.350, and chapter 70.79 RCW. 04-01-194, § 296-104-065, filed 12/24/03, effective 1/24/04; 01-24-061, § 296-104-065, filed 11/30/01, effective 12/31/01. Statutory Authority: RCW 70.79.030 and 70.79.040. 99-22-026, § 296-104-065, filed 10/26/99, effective 11/26/99; 96-21-081, § 296-104-065, filed 10/16/96, effective 11/16/96. Statutory Authority: RCW 70.79.040. 94-21-002, § 296-104-065, filed 10/5/94, effective 11/5/94. Statutory Authority: RCW 70.79.030. 78-03-057 (Order 78-3), § 296-104-065, filed 2/22/78; Order 74-37, § 296-104-065, filed 11/8/74; Part II, § 10, filed 3/23/60.]

WAC 296-104-100 Inspection—How often must boilers and unfired pressure vessels be inspected? In accordance with RCW 70.79.080, 70.79.090, and 70.79.240 the following inspection requirements shall apply:

(1) **Power boilers** shall be inspected:

(a) Internally and externally while not under pressure - Annually.

(b) Externally while under pressure - Annually.

(2) **Organic vapor boilers** shall be inspected:

(a) Internally and externally while not under pressure - Biennially.

(b) Externally while under pressure - Annually.

(3) **Low pressure heating boilers** shall be inspected:

(a) Externally while in operation and under pressure - Biennially.

(b) Where construction permits, internally while not under pressure. Also, as a minimum, an internal of their low water fuel cutoff(s) must be completed, where construction permits - Biennially.

(4) **Hot water heaters** shall be inspected:

(a) Externally - Biennially.

(b) Internally - None required.

(5) **Unfired pressure vessels** shall be inspected:

(a) Externally - Biennially.

(b) Internally:

(i) When subject to corrosion and construction permits - Biennially. Vessels in an owner/user inspection program may follow intervals established by the NBIC or API-510 eighth edition with addenda, provided nondestructive examination (NDE) is performed at the biennial external inspection.

(ii) Pulp or paper dryer rolls may be inspected on a five-year basis in accordance with TAPPI TIP 0402-16 2001 edition, provided the owner has established a written inspection program accepted by the inspector that meets the minimum requirements of TAPPI TIP 0402-16 2001 edition.

(iii) Vessels not subject to corrosion do not require an internal.

[Statutory Authority: Chapter 70.79 RCW. 04-21-069, § 296-104-100, filed 10/19/04, effective 1/1/05. Statutory Authority: RCW 70.79.030, 70.79.040, 70.79.150, 70.79.290, 70.79.330, 70.79.350, and chapter 70.79 RCW. 04-01-194, § 296-104-100, filed 12/24/03, effective 1/24/04; 01-24-061, § 296-104-100, filed 11/30/01, effective 12/31/01. Statutory Authority: RCW 70.79.030 and 70.79.040. 99-22-026, § 296-104-100, filed 10/26/99, effective 11/26/99; 98-22-024, § 296-104-100, filed 10/28/98, effective 11/28/98; 95-19-058, § 296-104-100, filed 9/15/95, effective 10/16/95. Statutory Authority: RCW 70.79.040. 94-21-002, § 296-104-100, filed 10/5/94, effective 11/5/94; Part III, § 1, filed 3/23/60.]

WAC 296-104-102 Inspection—What are the standards for in-service inspection? Where a conflict exists between the requirements of the standards listed below and this chapter, this chapter shall prevail.

(1) The standard for inspection of nonnuclear boilers, unfired pressure vessels, and safety devices is the National Board Inspection Code (NBIC), 2001 edition, with addenda. This code may be used on or after the date of issue and becomes mandatory twelve months after adoption by the board as specified in RCW 70.79.050(2).

(2) The standard for inspection of historical steam boilers of riveted construction preserved, restored, or maintained for hobby or demonstration use, shall be Appendix "C" of the National Board Inspection Code as referenced in subsection (1) of this section.

(3) The standard for inspection of nuclear items is ASME section XI. The applicable ASME Code edition and addenda shall be as specified in the owner in-service inspection program plan.

(4) Where a petroleum or chemical process industry owner/user inspection agency so chooses, the standard for inspection of unfired pressure vessels used by the owner shall be the API-510 Pressure Vessel Inspection Code, eighth edition, with addenda. This code may be used on or after the date of issue.

(5) TAPPI TIP 0402-16, dated 2001 may be used for both pulp dryers and paper machine dryers when requested by the owner. When requested by the owner, this document becomes a requirement and not a guideline.

[Statutory Authority: Chapter 70.79 RCW. 04-21-069, § 296-104-102, filed 10/19/04, effective 1/1/05. Statutory Authority: RCW 70.79.030, 70.79.040, 70.79.150, 70.79.290, 70.79.330, 70.79.350, and chapter 70.79 RCW. 01-24-061, § 296-104-102, filed 11/30/01, effective 12/31/01. Statutory Authority: RCW 70.79.030 and 70.79.040. 99-22-026, § 296-104-102, filed 10/26/99, effective 11/26/99; 98-22-024, § 296-104-102, filed 10/28/98, effective 11/28/98; 96-21-081, § 296-104-102, filed 10/16/96, effective 11/16/96.

Statutory Authority: RCW 70.79.040. 94-21-002, § 296-104-102, filed 10/5/94, effective 11/5/94.]

WAC 296-104-105 Inspection—How much time is required for notification of inspection? Seven days will be considered sufficient notification. The owner or user shall prepare each boiler and unfired pressure vessel for internal inspection and shall prepare for and apply a hydrostatic pressure test whenever necessary on the date specified by the inspector.

[Statutory Authority: RCW 70.79.030 and 70.79.040. 99-22-026, § 296-104-105, filed 10/26/99, effective 11/26/99; 95-19-058, § 296-104-105, filed 9/15/95, effective 10/16/95; Part III, § 2, filed 3/23/60.]

WAC 296-104-110 Inspection—What will be done when boilers or unfired pressure vessels are deemed unsafe or defective? Upon inspection of a boiler or unfired pressure vessel or appurtenances, if an inspector finds hazardous conditions such that it is unsafe to operate under pressure, remedial action shall be initiated at once. A red tag indicating "unsafe - do not use" shall be attached to the principle operating control and the owner or user advised that further operation is prohibited until specified repairs or other action are taken. The chief inspector shall be notified immediately, followed by a report on the condition. Any certificate in force is considered suspended. When reinspection establishes that necessary repairs have been made or corrective action taken so that the boiler or unfired pressure vessel is safe to operate, a report of reinspection shall be submitted to the chief inspector. The certificate of inspection will then be reinstated or a new certificate issued as appropriate.

If other defects, but not unsafe conditions, are found, a routine inspection report containing a noncompliance report shall be submitted to the chief inspector. The owner or user shall be allowed to operate the object for a period as specified by the inspector so long as corrective action is completed in the allotted time.

[Statutory Authority: RCW 70.79.030 and 70.79.040. 99-22-026, § 296-104-110, filed 10/26/99, effective 11/26/99; 95-19-058, § 296-104-110, filed 9/15/95, effective 10/16/95; Part III, § 3, filed 3/23/60.]

WAC 296-104-115 Inspection—What will be done when defective conditions are concealed by covering? If upon an external inspection there is evidence of a leak or crack, enough of the covering of the boiler or unfired pressure vessel shall be removed to satisfy the inspector in order to determine the safety of the boiler or unfired pressure vessel. If the covering cannot be removed at the time, the inspector may order the operation of the boiler or unfired pressure vessel stopped until such time as the covering can be removed and proper examination made.

[Statutory Authority: RCW 70.79.030 and 70.79.040. 99-22-026, § 296-104-115, filed 10/26/99, effective 11/26/99; 95-19-058, § 296-104-115, filed 9/15/95, effective 10/16/95; Part III, § 4, filed 3/23/60.]

WAC 296-104-125 Inspection—What are the requirements for obtaining a certificate of inspection? Before a certificate of inspection as defined in RCW 70.79.290 is issued, a boiler or unfired pressure vessel must be inspected by an inspector and have all necessary permits. In addition, the owner or user shall pay the fees scheduled in WAC 296-104-700 directly to the chief inspector. The inspection process is not complete until the certificate of inspection is posted.

If the owner or user of each boiler or unfired pressure vessel required to be inspected refuses to allow an inspection to be made, or refuses to pay the above fee, the certificate of inspection shall be suspended by the chief inspector until the owner or user complies with the requirements.

[Statutory Authority: RCW 70.79.030, 70.79.040, 70.79.150, 70.79.290, 70.79.330, 70.79.350, and chapter 70.79 RCW. 02-23-036, § 296-104-125, filed 11/13/02, effective 12/14/02. Statutory Authority: RCW 70.79.030 and 70.79.040. 99-22-026, § 296-104-125, filed 10/26/99, effective 11/26/99; Part III, § 6, filed 3/23/60.]

WAC 296-104-130 Inspection—When are inspection certificates valid? An inspection certificate, issued in accordance with RCW 70.79.290, shall be valid until expiration unless some defect or condition affecting the safety of the boiler or unfired pressure vessel is disclosed or the conditions of RCW 70.79.300 apply.

When an agreement exists between the state and the city jurisdictions of Spokane or Seattle, the certificates for portable boilers and unfired pressure vessels will be considered valid.

[Statutory Authority: RCW 70.79.030, 70.79.040, 70.79.150, 70.79.290, 70.79.330, 70.79.350, and chapter 70.79 RCW. 01-24-061, § 296-104-130, filed 11/30/01, effective 12/31/01. Statutory Authority: RCW 70.79.030 and 70.79.040. 99-22-026, § 296-104-130, filed 10/26/99, effective 11/26/99; 95-19-058, § 296-104-130, filed 9/15/95, effective 10/16/95; Part III, § 7, filed 3/23/60.]

WAC 296-104-135 Inspection—What are the requirements for restamping of boilers and unfired pressure vessels? When the stamping on a boiler or unfired pressure vessel becomes indistinct the inspector shall instruct the owner or user to have it restamped. Request for permission to restamp the boiler or unfired pressure vessel shall be made to the chief inspector and proof of the original stamping shall accompany the request. Restamping authorized by the chief inspector shall be done only in the presence of an inspector, and shall be identical with the original stamping except that it will not be required to restamp the code symbol. Notice of completion of such restamping shall be filed with the chief boiler inspector by the inspector who witnessed the restamping of the boiler or unfired pressure vessel together with a facsimile of the stamping applied.

[Statutory Authority: RCW 70.79.030 and 70.79.040. 99-22-026, § 296-104-135, filed 10/26/99, effective 11/26/99; 95-19-058, § 296-104-135, filed 9/15/95, effective 10/16/95; Part III, § 8, filed 3/23/60.]

WAC 296-104-140 Inspection—How should a state stamp be applied? Upon completion of the installation, all boilers and unfired pressure vessels shall be inspected by an inspector as defined in WAC 296-104-010. At the time of this inspection, each boiler or unfired pressure vessel shall be marked with a serial number of the state of Washington followed by the letter "W." The marking should be conspicuously located and as close as possible to the boiler or unfired pressure vessel nameplate.

Washington special numbers when assigned by the chief inspector shall be a serial number of the state of Washington followed by the letters "WS."

All rental boilers used in the state of Washington shall be marked with the serial number of the state of Washington followed by the letters "WR." This will indicate that the boiler is a rental unit.

The state of Washington markings, numbers and letters, referenced above, shall not be less than 5/16 inches in height and shall not be concealed by lagging or paint and shall be exposed at all times.

[Statutory Authority: Chapter 70.79 RCW. 04-21-069, § 296-104-140, filed 10/19/04, effective 1/1/05. Statutory Authority: RCW 70.79.030, 70.79.040, 70.79.150, 70.79.290, 70.79.330, 70.79.350, and chapter 70.79 RCW. 02-23-036, § 296-104-140, filed 11/13/02, effective 12/14/02. Statutory Authority: RCW 70.79.030 and 70.79.040. 99-22-026, § 296-104-140, filed 10/26/99, effective 11/26/99; 96-21-081, § 296-104-140, filed 10/16/96, effective 11/16/96; 95-19-058, § 296-104-140, filed 9/15/95, effective 10/16/95; Order 73-1, § 296-104-140, filed 3/22/73; Part III, § 9, filed 3/23/60.]

WAC 296-104-145 Inspection—How are groups of vessels operating as a single unit classified? A group of unfired pressure vessels operating as a single unit such as the vessels in a refrigeration system, evaporators, ironers and paper machines shall have an individual state serial number marked on each boiler or unfired pressure vessel. The marking should be conspicuously located and as close as possible to the boiler or unfired pressure vessel nameplate. The certificate of inspection fee shall be as outlined in WAC 296-104-700, for each vessel of the system.

[Statutory Authority: RCW 70.79.030, 70.79.040, 70.79.150, 70.79.290, 70.79.330, 70.79.350, and chapter 70.79 RCW. 02-23-036, § 296-104-145, filed 11/13/02, effective 12/14/02. Statutory Authority: RCW 70.79.030 and 70.79.040. 99-22-026, § 296-104-145, filed 10/26/99, effective 11/26/99; 95-19-058, § 296-104-145, filed 9/15/95, effective 10/16/95; Part III, § 10, filed 3/23/60.]

WAC 296-104-150 Inspection—How are unfired steam boilers classified? Unfired steam boilers as defined in WAC 296-104-010 operating at pressures of 50 psi or more shall be inspected as power boilers. Unfired steam boilers operating at less than 50 psi shall be inspected as unfired pressure vessels.

[Statutory Authority: RCW 70.79.030, 70.79.040, 70.79.150, 70.79.290, 70.79.330, 70.79.350, and chapter 70.79 RCW. 02-23-036, § 296-104-150, filed 11/13/02, effective 12/14/02. Statutory Authority: RCW 70.79.030 and 70.79.040. 99-22-026, § 296-104-150, filed 10/26/99, effective 11/26/99; 95-19-058, § 296-104-150, filed 9/15/95, effective 10/16/95; Part III, § 11, filed 3/23/60.]

WAC 296-104-151 Inspection—What are the requirements for rental boilers? Every rental boiler used in the state of Washington will have an internal inspection as defined in WAC 296-104-010 witnessed by an inspector once a year. An external inspection as defined in WAC 296-104-010 shall be witnessed by an inspector at each and every rental location before being placed into service. Rental boilers shall also meet the requirements of WAC 296-104-300.

A rental boiler, which has never been in rental service in the state of Washington, shall meet the requirements of WAC 296-104-273. Each inspection will be reported to the state of Washington in accordance with WAC 296-104-040, and a copy of this report will be posted on the rental boiler.

It is the responsibility of the rental boiler owner to arrange for all required inspections.

[Statutory Authority: RCW 70.79.030, 70.79.040, 70.79.150, 70.79.290, 70.79.330, 70.79.350, and chapter 70.79 RCW. 02-23-036, § 296-104-151, filed 11/13/02, effective 12/14/02; 01-24-061, § 296-104-151, filed 11/30/01, effective 12/31/01. Statutory Authority: RCW 70.79.030 and 70.79.040. 99-22-026, § 296-104-151, filed 10/26/99, effective 11/26/99; 96-21-081, § 296-104-151, filed 10/16/96, effective 11/16/96.]

WAC 296-104-155 Inspection—What preparations are necessary prior to internal inspections? The owner or user shall prepare a boiler for internal inspection in the following manner or as required by the inspector:

(1) Water shall be drawn off and the boiler thoroughly washed.

(2) All manhole and handhole plates and wash-out plugs and water column connections shall be removed, the furnace and combustion chambers thoroughly cooled and cleaned.

(3) All grates of internally fired boilers shall be removed.

(4) At each annual inspection brickwork shall be removed as required by the inspector in order to determine the condition of the boiler headers, drums, furnace, supports, or other parts.

(5) The steam gauge shall be removed for testing or evidence of testing shown.

(6) Any leakage of steam or water into the boiler shall be prevented by either disconnecting the pipe or block valve at the most convenient point or installing isolation blinds.

(7) The low water cutout shall be disassembled to such a degree as the inspector shall require.

Unfired pressure vessels shall be prepared for internal inspection to the extent deemed necessary by the inspector.

[Statutory Authority: RCW 70.79.030, 70.79.040, 70.79.150, 70.79.290, 70.79.330, 70.79.350, and chapter 70.79 RCW. 02-23-036, § 296-104-155, filed 11/13/02, effective 12/14/02. Statutory Authority: RCW 70.79.030 and 70.79.040. 99-22-026, § 296-104-155, filed 10/26/99, effective 11/26/99; 95-19-058, § 296-104-155, filed 9/15/95, effective 10/16/95; Part III, § 12, filed 3/23/60.]

WAC 296-104-160 Inspection—What happens if a boiler or unfired pressure vessel is improperly prepared for inspection? If a boiler or unfired pressure vessel has not been properly prepared for an internal inspection, or the owner or user fails to comply with the requirements for hydrostatic test as set forth in these rules, the inspector may decline to make the inspection or test and the certificate of inspection shall be withheld until the owner or user complies with the requirements.

[Statutory Authority: RCW 70.79.030 and 70.79.040. 99-22-026, § 296-104-160, filed 10/26/99, effective 11/26/99; 95-19-058, § 296-104-160, filed 9/15/95, effective 10/16/95; Part III, § 13, filed 3/23/60.]

WAC 296-104-165 Inspection—When should coverings be removed for inspection? If the boiler or unfired pressure vessel is jacketed such that the longitudinal seams of shells, drums, or domes cannot be seen, or if pertinent information cannot be determined by other means, the following may be ordered by the inspector: Enough of the jacketing, setting wall, or other form of casing or housing shall be removed so that information necessary to determine the safety of the boiler or unfired pressure vessel can be obtained to the satisfaction of the inspector.

[Statutory Authority: RCW 70.79.030 and 70.79.040. 99-22-026, § 296-104-165, filed 10/26/99, effective 11/26/99; 95-19-058, § 296-104-165, filed 9/15/95, effective 10/16/95; Part III, § 14, filed 3/23/60.]

WAC 296-104-170 Inspection—When are shop inspections required? Shop inspections shall be as required in the standards of construction as adopted in WAC 296-104-200. Only inspectors holding a national board commission with the appropriate endorsements and a commission issued by the state of Washington shall make shop inspections in this state. Supervisors of inspectors who perform shop inspections in the state need only a National Board Commission with the appropriate endorsements.

Upon request from a boiler or pressure vessel manufacturer holding an ASME Certificate of Authorization within the jurisdiction, the department shall provide inspection services as required by the ASME Code. The manufacturer receiving such inspection services shall reimburse the department for the time and expenses in accordance with the fee schedule established in WAC 296-104-700.

[Statutory Authority: RCW 70.79.030, 70.79.040, 70.79.150, 70.79.290, 70.79.330, 70.79.350, and chapter 70.79 RCW. 02-23-036, § 296-104-170, filed 11/13/02, effective 12/14/02. Statutory Authority: RCW 70.79.030 and 70.79.040. 99-22-026, § 296-104-170, filed 10/26/99, effective 11/26/99; 96-21-081, § 296-104-170, filed 10/16/96, effective 11/16/96. Statutory Authority: RCW 70.79.040. 90-20-029, § 296-104-170, filed 9/24/90, effective 10/25/90. Statutory Authority: RCW 70.79.030. 78-03-057 (Order 78-3), § 296-104-170, filed 2/22/78; Part III, § 15, filed 3/23/60.]

WAC 296-104-180 Inspection—How are radioactive systems inspected? An alternative means of inspection is allowed when a pressure vessel has radioactive contamination that would not allow entering for visual inspection. The inspector and owner shall work out a program of nondestructive examination that shall ascertain the condition of the vessel to assure its integrity.

[Statutory Authority: RCW 70.79.030 and 70.79.040. 98-22-024, § 296-104-180, filed 10/28/98, effective 11/28/98.]

WAC 296-104-200 Construction—What are the standards for new construction? The standards for new construction are:

(1) ASME Boiler and Pressure Vessel Code, 2004 edition, with addenda Sections I, III, IV, VIII, X;

(2) ASME PVHO-1 2002-2003 Safety Standard for Pressure Vessels for Human Occupancy; and

(3) ASME CSD-1 2002 edition with addenda (as referenced in WAC 296-104-300(3)); and

(4) NFPA 85 Boiler and Combustion Systems Hazards Code 2004 edition (for use with boilers with fuel input ratings of 12, 500,000 BTU/hr) or greater; and

(5) Standards of construction approved by the chief inspector and meeting the National Board Criteria for Registration of Boilers, Pressure Vessels and Other Pressure Retaining Items.

These codes and standards may be used on or after the date of issue and become mandatory twelve months after adoption by the board as specified in RCW 70.79.050(2). ASME Code Cases may be approved for use when accepted by the chief inspector. The board recognizes that the ASME Code states that new editions of the code become mandatory on issue and that subsequent addenda become mandatory six months after the date of issue. For nuclear systems, components and parts the time period for addenda becoming mandatory is defined in the Code of Federal Regulations.

[Statutory Authority: Chapter 70.79 RCW. 04-21-069, § 296-104-200, filed 10/19/04, effective 1/1/05. Statutory Authority: RCW 70.79.030, 70.79.040, 70.79.150, 70.79.290, 70.79.330, 70.79.350, and chapter 70.79 RCW. 02-23-036, § 296-104-200, filed 11/13/02, effective 12/14/02; 01-24-061, § 296-104-200, filed 11/30/01, effective 12/31/01. Statutory Authority: RCW 70.79.030, 70.79.040 and chapter 70.79 RCW. 00-21-024, § 296-104-200, filed 10/10/00, effective 11/13/00. Statutory Authority: RCW 70.79.030 and 70.79.040. 98-22-024, § 296-104-200, filed 10/28/98, effective 11/28/98; 97-20-109, § 296-104-200, filed 9/30/97, effective 10/31/97; 96-21-081, § 296-104-200, filed 10/16/96, effective 11/16/96. Statutory Authority: RCW 70.79.040. 93-12-014, § 296-104-200, filed 5/21/93, effective 6/21/93; 92-11-070, § 296-104-200, filed 5/20/92, effective 6/20/92; 91-11-107, § 296-104-200, filed 5/22/91, effective 6/22/91; 90-04-009, § 296-104-200, filed 1/26/90, effective 2/26/90. Statutory Authority: RCW 70.79.040 and 70.79.050. 86-01-088 (Order 85-26), § 296-104-200, filed 12/19/85. Statutory Authority: RCW 70.79.030 and 70.79.330. 84-11-016 (Order 84-09), § 296-104-200, filed 5/10/84; 82-24-025 (Order 82-36), § 296-104-200, filed 11/23/82, effective 1/1/83. Statutory Authority: RCW 70.79.030. 82-05-003 (Order 82-2), § 296-104-200, filed 2/4/82; 81-12-012 (Order 81-10), § 296-104-200, filed 5/28/81; 81-01-114 (Order 80-28), § 296-104-200, filed 12/24/80; 80-05-065 (Order 80-7), § 296-104-200, filed 4/23/80; 79-05-054 (Order 79-7), § 296-104-200, filed 4/30/79; 78-10-096 (Order 78-19), § 296-104-200, filed 10/3/78; Order 77-23, § 296-104-200, filed 11/8/77; Order 77-9, § 296-104-200, filed 5/26/77; Order 75-35, § 296-104-200, filed 10/29/75; Order 74-37, § 296-104-200, filed 11/8/74; Order 73-1, § 296-104-200, filed 3/22/73; Order 72-17, § 296-104-200, filed 9/28/72; Order 72-11, § 296-104-200, filed 7/7/72; Part IV, § 1, filed 3/23/60.]

WAC 296-104-205 Construction—What are the requirements for nonstandard new construction? Those boilers and unfired pressure vessels that are exempted by the codes adopted in WAC 296-104-200 due to volume, temperature or pressure requirements, and are not to be constructed to those codes, must be certified to a nationally recognized testing agency or constructed to WAC 296-104-230. See WAC 296-104-307 for safety pressure relief devices.

Other boilers and unfired pressure vessels that are not to be constructed to the codes adopted in WAC 296-104-200 may be treated as special designs at the discretion of the board. Nonstandard construction shall not be permitted to avoid standard construction.

[Statutory Authority: RCW 70.79.030, 70.79.040, 70.79.150, 70.79.290, 70.79.330, 70.79.350, and chapter 70.79 RCW. 01-24-061, § 296-104-205, filed 11/30/01, effective 12/31/01. Statutory Authority: RCW 70.79.030, 70.79.040 and chapter 70.79 RCW. 00-21-024, § 296-104-205, filed 10/10/00, effective 11/13/00. Statutory Authority: RCW 70.79.030 and 70.79.040. 96-21-081, § 296-104-205, filed 10/16/96, effective 11/16/96; Part IV, § 2, filed 3/23/60.]

WAC 296-104-210 Construction—What are the requirements for construction of boilers and unfired pressure vessels of special design? Boilers and unfired pressure vessels of special design require a special certificate granted by the board. At a minimum the following shall be supplied to obtain board approval for special designs: Drawings, design calculations, and a Washington state professional engineer's evaluation of the design. Upon board approval a Washington special number will be assigned by the chief inspector. The installation will be subject to the regular inspections required by WAC 296-104-100 and any additional conditions as required by the board.

[Statutory Authority: RCW 70.79.030, 70.79.040 and chapter 70.79 RCW. 00-21-024, § 296-104-210, filed 10/10/00, effective 11/13/00. Statutory Authority: RCW 70.79.030 and 70.79.040. 96-21-081, § 296-104-210, filed 10/16/96, effective 11/16/96. Statutory Authority: RCW 70.79.040 and 70.79.050. 86-07-064 (Order 86-02), § 296-104-210, filed 3/19/86; Order 73-1, § 296-104-210, filed 3/22/73; Part IV, § 3, filed 3/23/60.]

WAC 296-104-215 Construction—What are the requirements to use nonstandard boilers and unfired pressure vessels constructed prior to January 1, 1952? Nonstandard boilers and unfired pressure vessels constructed prior to January 1, 1952, may be used provided they have not been moved from their original setting since January 1, 1952.

[Statutory Authority: RCW 70.79.030, 70.79.040 and chapter 70.79 RCW. 00-21-024, § 296-104-215, filed 10/10/00, effective 11/13/00. Statutory Authority: RCW 70.79.030 and 70.79.040. 97-20-109, § 296-104-215, filed 9/30/97, effective 10/31/97; 96-21-081, § 296-104-215, filed 10/16/96, effective 11/16/96; Part IV, § 4, filed 3/23/60.]

WAC 296-104-220 Construction—What are the requirements to use nonstandard second hand boilers and unfired pressure vessels? Nonstandard second hand boilers and unfired pressure vessels constructed after January 1, 1952, cannot be used in this state without prior approval of the board of boiler rules. At a minimum the following shall be supplied to obtain board approvals: Drawings, a history, design calculations, and a Washington state professional engineer's evaluation of the design and present condition. Upon board approval a Washington special number will be assigned by the chief inspector. The installation will be subject to the regular inspections required by WAC 296-104-100 and any additional conditions as required by the board.

[Statutory Authority: RCW 70.79.030, 70.79.040 and chapter 70.79 RCW. 00-21-024, § 296-104-220, filed 10/10/00, effective 11/13/00. Statutory Authority: RCW 70.79.030 and 70.79.040. 96-21-081, § 296-104-220, filed 10/16/96, effective 11/16/96. Statutory Authority: RCW 70.79.240. 88-01-064 (Order 87-25), § 296-104-220, filed 12/17/87; Part IV, § 5, filed 3/23/60.]

WAC 296-104-230 Construction—What are the testing requirements for new boilers or unfired pressure vessels exempted from code requirements for volume, pressure or temperature? Boilers or unfired pressure vessels that are not required by the codes adopted in WAC 296-104-200 to be built to those codes (except those exempted in the RCWs), shall be tested as follows:

One boiler or unfired pressure vessel of each design and size taken from the manufacturer's stock at random, shall be subjected to a hydrostatic test of twice the rated maximum allowable working pressure in the presence of an inspector holding a national board commission. The boiler or unfired pressure vessel shall withstand the hydrostatic pressure test without leaks and without exceeding 80% of the boiler or unfired pressure vessel material's yield strength. Samples shall be taken from the longitudinal seam and tests made as outlined in Section IX ASME Code for root and face bends and reduced tensile coupons. Upon successfully passing the above tests, the maximum allowable working pressure will be allowed for all boilers or unfired pressure vessels constructed to identical specifications. The company name, serial number, maximum allowable working pressure, and energy input (if applicable) shall be stamped or marked in a permanent manner on each boiler or unfired pressure vessel. A retest shall be made at the inspector's discretion or by the request of the chief inspector. Any unfired pressure vessels containing water and an air cushion designed for less than 300 psi and 210 degree F, in use prior to January 1, 1997, may be accepted by hydrostatically testing them to twice their maximum allowable working pressure.

[Statutory Authority: RCW 70.79.030, 70.79.040, 70.79.150, 70.79.290, 70.79.330, 70.79.350, and chapter 70.79 RCW. 02-23-036, § 296-104-230, filed 11/13/02, effective 12/14/02. Statutory Authority: RCW 70.79.030, 70.79.040 and chapter 70.79 RCW. 00-21-024, § 296-104-230, filed 10/10/00, effective 11/13/00. Statutory Authority: RCW 70.79.030 and 70.79.040. 96-21-081, § 296-104-230, filed 10/16/96, effective 11/16/96; Order 74-37, § 296-104-230, filed 11/8/74; Part IV, § 7, filed 3/23/60.]

WAC 296-104-235 Construction—What are the requirements for code exempted boiler and unfired pressure vessel safety relief valves? The boilers and unfired pressure vessels covered by WAC 296-104-230 shall be protected by the installation of ASME Code relief valves with trial levers, set pressure not to exceed the boiler's or the unfired pressure vessel's design pressure. Relief valves shall be installed on top of the boiler or the unfired pressure vessel or on outlet piping as close as possible to the boiler or unfired pressure vessel, with a minimum of fittings and no valves intervening. The outlet of the relief valve shall be run full size to a safe place and shall not induce stress on the valve.

[Statutory Authority: RCW 70.79.030, 70.79.040 and chapter 70.79 RCW. 00-21-024, § 296-104-235, filed 10/10/00, effective 11/13/00. Statutory Authority: RCW 70.79.030 and 70.79.040. 96-21-081, § 296-104-235, filed 10/16/96, effective 11/16/96. Statutory Authority: RCW 70.79.030. 78-03-057 (Order 78-3), § 296-104-235, filed 2/22/78; Part IV, § 8, filed 3/23/60.]

WAC 296-104-245 Construction—Combustible fluid heaters. Steam or hot water combustible fluid heaters shall be so designed and constructed that in the event of failure of any part, the combustible fluid cannot enter the boiler water.

[Statutory Authority: RCW 70.79.030 and 70.79.040. 96-21-081, § 296-104-245, filed 10/16/96, effective 11/16/96. Statutory Authority: RCW 70.79.030. 78-03-057 (Order 78-3), § 296-104-245, filed 2/22/78; Part IV, § 10, filed 3/23/60.]

WAC 296-104-255 Installation—Clearance at top of boilers. When boilers are replaced or new boilers installed in either existing or new buildings, a minimum clearance as specified below shall be provided between the top of boiler proper and ceiling:

(1) Power boilers having a steam generating capacity in excess of 5,000 pounds per hour or having a heating surface in excess of 1,000 sq. ft. or input in excess of 5,000,000 btu per hour. Clearance shall be . . . . . 7 feet.

(2) Low pressure heating boilers which exceed any one of the following limits: 5,000,000 btu input; 5,000 lbs. steam per hour capacity or 1,000 sq. ft. heating surface; and power boilers which do not exceed any of the following limits: 5,000,000 btu input; 5,000 lbs. steam per hour capacity or 1,000 sq. ft. heating surface; and all boilers with manholes on top of boiler except those described in paragraph (1) above . . . . . 3 feet.

(3) Low pressure heating boilers which do not exceed the above limits and miniature boilers . . . . . 2 feet.

[Statutory Authority: RCW 70.79.030 and 70.79.040. 96-21-081, § 296-104-255, filed 10/16/96, effective 11/16/96; Part IV, § 12, filed 3/23/60.]

WAC 296-104-256 Installation—What are the required clearances for boilers? When boilers are replaced or new boilers installed in either existing or new buildings, sufficient access must be provided for inspection, maintenance, operation, and repair. As a minimum clearance at sides, front and back wall shall be the manufacturers' recom-

mendations, but in no case less than eighteen inches. Boilers having manholes shall have five feet clearance from the manhole opening and any wall, ceiling, or piping that will prevent a person from entering the boiler.

[Statutory Authority: RCW 70.79.030, 70.79.040, 70.79.150, 70.79.290, 70.79.330, 70.79.350, and chapter 70.79 RCW. 04-01-194, § 296-104-256, filed 12/24/03, effective 1/24/04; 02-23-036, amended and recodified as § 296-104-256, filed 11/13/02, effective 12/14/02. Statutory Authority: RCW 70.79.030 and 70.79.040. 96-21-081, § 296-104-260, filed 10/16/96, effective 11/16/96. Statutory Authority: Chapter 70.79 RCW. 89-15-025 (Order 89-05), § 296-104-260, filed 7/13/89, effective 8/13/89; Part IV, § 13, filed 3/23/60.]

WAC 296-104-260 Installation—What are the required clearances for unfired pressure vessels? When unfired pressure vessels are replaced or new vessels are installed in either existing or new buildings, manufacturers' recommendations shall be used, but in no case less than eighteen inches shall be provided between the top of the unfired pressure vessel and the ceiling and adjacent walls or other structures. All unfired pressure vessels having manholes shall have five feet clearance from manhole openings and any wall, ceiling, or piping that will prevent a person from entering the unfired pressure vessel.

[Statutory Authority: RCW 70.79.030, 70.79.040, 70.79.150, 70.79.290, 70.79.330, 70.79.350, and chapter 70.79 RCW. 02-23-036, amended and recodified § 296-104-260, filed 11/13/02, effective 12/14/02. Statutory Authority: RCW 70.79.030 and 70.79.040. 96-21-081, § 296-104-273, filed 10/16/96, effective 11/16/96.]

WAC 296-104-265 Installation—What are the requirements for unfired pressure vessels installed underground? Unfired pressure vessels installed underground shall comply with the following requirements:

(1) A pit with concrete or masonry sides and floor shall enclose the underground portion of the unfired pressure vessel.

(2) Pit covers shall be removable.

(3) Clearances shall be as required by WAC 296-104-260.

[Statutory Authority: RCW 70.79.030, 70.79.040, 70.79.150, 70.79.290, 70.79.330, 70.79.350, and chapter 70.79 RCW. 04-01-194, § 296-104-265, filed 12/24/03, effective 1/24/04; 02-23-036, recodified as § 296-104-265, filed 11/13/02, effective 12/14/02. Statutory Authority: RCW 70.79.030 and 70.79.040. 97-20-109, § 296-104-320, filed 9/30/97, effective 10/31/97; Part V, § 5, filed 3/23/60.]

WAC 296-104-271 Installation—How does an owner, user, or installer obtain a variance from clearances? Variances from WAC 296-104-255, 296-104-256, 296-104-260, and 296-104-265 may be requested. The variance request shall be in writing on an appropriate form approved by the chief inspector, and shall specify how equivalent safety is to be maintained. The chief inspector may grant the variance provided that safety and accessibility for inspections are acceptable.

[Statutory Authority: RCW 70.79.030, 70.79.040, 70.79.150, 70.79.290, 70.79.330, 70.79.350, and chapter 70.79 RCW. 02-23-036, § 296-104-271, filed 11/13/02, effective 12/14/02.]

WAC 296-104-273 Installation—What inspections are required for reinstalled standard boilers or unfired pressure vessels? When a stationary standard boiler or unfired pressure vessel is moved and reinstalled it must be inspected by an inspector. The following will be required:

(1) The fittings and appliances must comply with the latest codes adopted in WAC 296-104-200.

(2) An installation permit must be submitted in accordance with WAC 296-104-020.

(3) For any boiler or unfired pressure vessel the following are required to be documented and submitted:

(a) A hydrostatic test up to 150% of the maximum allowable working pressure, MAWP.

(b) An internal inspection.

(c) An operational test.

(d) Any repairs deemed necessary.

(e) A complete history of inspection, operation and repairs.

(4) The following are required unless waived by the inspector:

(a) Additional examination or nondestructive testing.

(b) A written evaluation by a professional engineer knowledgeable with boilers and pressure vessels, an ASME certificateholder, or a National Board R certificateholder.

[Statutory Authority: RCW 70.79.030, 70.79.040, 70.79.150, 70.79.290, 70.79.330, 70.79.350, and chapter 70.79 RCW. 02-23-036, recodified as § 296-104-273, filed 11/13/02, effective 12/14/02; 01-24-061, § 296-104-256, filed 11/30/01, effective 12/31/01. Statutory Authority: RCW 70.79.030 and 70.79.040. 96-21-081, § 296-104-256, filed 10/16/96, effective 11/16/96.]

WAC 296-104-295 Installation—What are the requirements for an explosion door? Provide substantial deflectors to divert the blast when explosion doors are located within seven feet of the firing floor or an operating platform.

[Statutory Authority: RCW 70.79.030, 70.79.040, 70.79.150, 70.79.290, 70.79.330, 70.79.350, and chapter 70.79 RCW. 02-23-036, recodified as § 296-104-295, filed 11/13/02, effective 12/14/02. Statutory Authority: RCW 70.79.030 and 70.79.040. 97-20-109, § 296-104-270, filed 9/30/97, effective 10/31/97; Part IV, § 15, filed 3/23/60.]

WAC 296-104-300 Installation—What control and limit devices are required on automatically fired boilers prior to June 1989? All automatically fired steam, vapor, or hot water boilers except boilers having a constant attendant who has no other duties while the boiler is in operation, shall be equipped with:

(1) An automatic low-water fuel cutoff; and

(2) An automatic water feeding device.

(3) All devices shall be designed so that they may be readily tested at frequent intervals.

[Statutory Authority: Chapter 70.79 RCW. 04-21-069, § 296-104-300, filed 10/19/04, effective 1/1/05. Statutory Authority: RCW 70.79.030, 70.79.040, 70.79.150, 70.79.290, 70.79.330, 70.79.350, and chapter 70.79 RCW. 04-01-194, § 296-104-300, filed 12/24/03, effective 1/24/04; 02-23-036, recodified as § 296-104-300, filed 11/13/02, effective 12/14/02; 01-24-061, § 296-104-265, filed 11/30/01, effective 12/31/01. Statutory Authority: RCW 70.79.030, 70.79.040 and chapter 70.79 RCW. 00-21-024, § 296-104-265, filed 10/10/00, effective 11/13/00. Statutory Authority: RCW 70.79.030 and 70.79.040. 98-22-024, § 296-104-265, filed 10/28/98, effective 11/28/98; 97-20-109, § 296-104-265, filed 9/30/97, effective 10/31/97. Statutory Authority: RCW 70.79.240. 88-01-064 (Order 87-25), § 296-104-265, filed 12/17/87; Part IV, § 14, filed 3/23/60.]

WAC 296-104-301 Installation—What control and limit devices are required on automatically fired boilers

after June 1989? In addition to those requirements listed in WAC 296-104-300, the following are also required:

(1) All boilers that are automatically fired low pressure steam heating boilers, small power boilers, and power steam boilers without a constant attendant who has no other duties shall be equipped with:

(a) Two high steam pressure limit controls, the highest of which shall be provided with a manual reset.

(b) Two low-water fuel cutoffs, one of which shall be provided with a manual reset device and independent of the feed water controller.

(c) Coil type flash steam boilers may use two high-temperature limit controls, one of which shall have a manual reset. This is instead of the low-water fuel cutoff.

(d) All control and limit devices shall be independently connected and electrically wired in series.

(2) All automatically fired hot water supply, low-pressure hot water heating boilers, and power hot water boilers shall be equipped with:

(a) Two high-temperature limit controls, the highest of which shall be provided with a manual reset.

(b) One low-water fuel cutoff with a manual reset and independent of the feed water controller.

(c) For coil type hot water boilers a low-water flow limit control installed in the circulating water line may be used instead of a low-water fuel cutoff.

(d) All control and limit devices shall be independently connected and electrically wired in series.

[Statutory Authority: Chapter 70.79 RCW. 04-21-069, § 296-104-301, filed 10/19/04, effective 1/1/05.]

WAC 296-104-302 Installation—What control and limit devices are required on automatically fired boilers after December 1998? In addition to those requirements listed in WAC 296-104-301, the following are also required with regard to installations or refits of gas, oil, or combinations of gas or oil:

(1) All boilers excluding lined potable water heaters of all BTU input installed or refitted after December 1998, with fuel input ratings of less than 12,500,000 BTU/hr which are fired by gas, oil, or a combination of gas or oil shall comply with the fuel train requirements defined in ASME CSD-1 (CF), as adopted in WAC 296-104-200 where applicable.

(2) Verification of fuel train compliance will be per CSD-1. A CSD-1 report will be completed and signed by an authorized representative of the manufacturer and/or the installing contractor.

(3) The CSD-1 report must be made available to the authorized inspection agency or the inspector after which a certificate of operation may be issued. The report shall remain in the possession of the boiler owner.

[Statutory Authority: Chapter 70.79 RCW. 04-21-069, § 296-104-302, filed 10/19/04, effective 1/1/05.]

WAC 296-104-303 Installation—What control and limit devices are required on automatically fired boilers after December 2004? In addition to those requirements listed in WAC 296-104-302, the following are also required with regard to installations or refits of gas, oil, or combinations of gas or oil:

(1) A manually operated remote shutdown switch or circuit breaker should be located just outside the boiler room door and marked for easy identification. Consideration should be given to the type and location of the switch to safeguard against tampering. If the boiler room door is on the building exterior, the switch should be located just inside the door. If there is more than one door to the boiler room, there should be a switch located at each door.

(2) A means shall be provided for testing the operation of hot water heating boiler low-water fuel cutoff(s) without resorting to draining the entire system. Such means shall not render the device(s) inoperable. If the means temporarily isolates the device from the boiler during testing, it shall automatically return to its normal position.

[Statutory Authority: Chapter 70.79 RCW. 04-21-069, § 296-104-303, filed 10/19/04, effective 1/1/05.]

WAC 296-104-307 Installation—When are platforms around boilers required? Provide platforms allowing safe access to each boiler, when the controls, valves, manholes, or casing openings are over ten feet above the floor.

[Statutory Authority: RCW 70.79.030, 70.79.040, 70.79.150, 70.79.290, 70.79.330, 70.79.350, and chapter 70.79 RCW. 04-01-194, § 296-104-307, filed 12/24/03, effective 1/24/04; 02-23-036, recodified as § 296-104-307, filed 11/13/02, effective 12/14/02. Statutory Authority: RCW 70.79.030 and 70.79.040. 97-20-109, § 296-104-300, filed 9/30/97, effective 10/31/97; Part V, § 1, filed 3/23/60.]

WAC 296-104-310 Installation—How many exits are required in boiler rooms? (1) For boiler rooms containing a boiler or a combination of boilers of over 2,000 square feet of heating surface, provide at least two exits on opposite sides of the boiler(s).

(2) Each floor elevation change of 10 feet or more must have two exits from that elevation.

(3) All exits shall meet Washington state building codes or local building codes as applicable.

[Statutory Authority: RCW 70.79.030, 70.79.040, 70.79.150, 70.79.290, 70.79.330, 70.79.350, and chapter 70.79 RCW. 02-23-036, recodified as § 296-104-310, filed 11/13/02, effective 12/14/02. Statutory Authority: RCW 70.79.030 and 70.79.040. 97-20-109, § 296-104-305, filed 9/30/97, effective 10/31/97; Part V, § 2, filed 3/23/60.]

WAC 296-104-316 Installation—What safety pressure relief devices are required on boilers and unfired pressure vessels? All boiler and unfired pressure vessels shall be safeguarded by safety valves, safety relief valves, or rupture discs as specified in the ASME Code. As an alternative they may be safeguarded by a fail safe pressure relief control system that is evaluated by a professional engineer knowledgeable with boilers and pressure vessels, licensed by the state of Washington, and accepted by the chief inspector.

[Statutory Authority: RCW 70.79.030, 70.79.040, 70.79.150, 70.79.290, 70.79.330, 70.79.350, and chapter 70.79 RCW. 04-01-194, § 296-104-316, filed 12/24/03, effective 1/24/04; 02-23-036, recodified as § 296-104-316, filed 11/13/02, effective 12/14/02. Statutory Authority: RCW 70.79.030, 70.79.040 and chapter 70.79 RCW. 00-21-024, § 296-104-307, filed 10/10/00, effective 11/13/00. Statutory Authority: RCW 70.79.030 and 70.79.040. 98-22-024, § 296-104-307, filed 10/28/98, effective 11/28/98.]

WAC 296-104-320 Installation—Where should the discharge from safety pressure relief devices, blow offs

and drains be directed? Discharge from safety pressure relief devices, blow offs and drains shall be directed to a safe point of discharge to prevent injury to personnel and property. Discharge lines from boilers, accumulators, or headers, with a capacity of 1,000 pounds of steam per hour or more, shall be directed outside of the building.

[Statutory Authority: RCW 70.79.030, 70.79.040, 70.79.150, 70.79.290, 70.79.330, 70.79.350, and chapter 70.79 RCW. 04-01-194, § 296-104-320, filed 12/24/03, effective 1/24/04; 02-23-036, recodified as § 296-104-320, filed 11/13/02, effective 12/14/02. Statutory Authority: RCW 70.79.030 and 70.79.040. 98-22-024, § 296-104-310, filed 10/28/98, effective 11/28/98; 97-20-109, § 296-104-310, filed 9/30/97, effective 10/31/97; Part V, § 3, filed 3/23/60.]

WAC 296-104-325 Installation—What are the requirements for boiler and unfired pressure vessel supports? Each boiler or unfired pressure vessel shall be supported by masonry or structural supports of sufficient strength and rigidity to safely support the vessel and its contents. There shall be no excessive vibration in either the vessel or its connecting piping.

[Statutory Authority: RCW 70.79.030, 70.79.040, 70.79.150, 70.79.290, 70.79.330, 70.79.350, and chapter 70.79 RCW. 04-01-194, § 296-104-325, filed 12/24/03, effective 1/24/04. Statutory Authority: RCW 70.79.030 and 70.79.040. 97-20-109, § 296-104-325, filed 9/30/97, effective 10/31/97; Part V, § 6, filed 3/23/60.]

WAC 296-104-330 Installation—What are the relief or safety valve requirements when pressure reducing valves are used? (1) Where pressure reducing valves are used, one or more relief or safety valve(s) and pressure gauge(s) shall be provided on the low pressure side of the reducing valve. The relief or safety valve(s) shall be located as close as possible to the reducing valve. The combined discharge capacity of the relief valves shall be such that the pressure rating of the lower pressure piping or equipment shall not be exceeded in case the reducing valve sticks open. Discharge lines shall comply with WAC 296-104-310.

(2) The use of hand-controlled bypasses around reducing valves is permissible. The bypass shall not be greater in capacity than the reducing valve unless the piping or equipment is adequately protected by a relief valve(s) or meets the requirements of the high pressure system.

[Statutory Authority: RCW 70.79.030 and 70.79.040. 97-20-109, § 296-104-330, filed 9/30/97, effective 10/31/97; Part V, § 7, filed 3/23/60.]

WAC 296-104-405 Existing installation—How can the maximum allowable working pressure be established for nonstandard boilers or unfired pressure vessels? The maximum allowable working pressure MAWP of cylindrical components under internal pressure shall be established as follows:

(1) For nonstandard steel low pressure steam heating boilers the MAWP shall be computed from the formula in subsection (5) of this section not exceeding 15 psi steam.

(2) For nonstandard steel low pressure water heating boilers the MAWP shall be computed from the formula in subsection (5) of this section not exceeding 30 psi.

(3) For nonstandard cast iron low pressure steam heating boilers the MAWP shall not exceed 15 psi steam.

(4) For nonstandard cast iron low pressure water heating boilers the MAWP shall not exceed 30 psi.

(5) For boilers and unfired pressure vessels not listed above, where the original code of construction is unknown, the following formula will be used.

$$\frac{TS \times t \times E}{R \times FS} = MAWP$$

TS = Tensile Strength in psi as given in ASME Code, when material cannot be identified use 55,000 for steel and 45,000 for wrought iron.

t = thickness in inches of the thinnest part determined by actual measurement.

E = efficiency of longitudinal joint or ligament, whichever is the least, determined by the rules and formula in the ASME Code. When construction methods are not known welded joint efficiency will be 70%.

R = radius of largest course in inches.

FS = Factor of Safety, for boilers shall be a minimum of 5. For boilers with a longitudinal lap seam it shall be a minimum 8. Boilers with a longitudinal lap seam, unless granted a special permit, may only be used at a maximum of 15 psi provided they have passed inspection. The minimum for unfired pressure vessels shall be 4 when less than 20 years old, 4 1/2 when over 20 years old.

[Statutory Authority: Chapter 70.79 RCW. 04-21-069, § 296-104-405, filed 10/19/04, effective 1/1/05. Statutory Authority: RCW 70.79.030, 70.79.040, 70.79.150, 70.79.290, 70.79.330, 70.79.350, and chapter 70.79 RCW. 04-01-194, § 296-104-405, filed 12/24/03, effective 1/24/04. Statutory Authority: RCW 70.79.030 and 70.79.040. 98-22-024, § 296-104-405, filed 10/28/98, effective 11/28/98; 97-20-109, § 296-104-405, filed 9/30/97, effective 10/31/97; Part VI, § 2, filed 3/23/60.]

WAC 296-104-502 Repairs—What are the requirements for nonnuclear boilers and unfired pressure vessel repairs and alterations? Repairs and alterations to nonnuclear boilers and pressure vessels shall be made in accordance with the rules of the National Board Inspection Code (NBIC) as adopted in WAC 296-104-102. Additionally, repairs and alterations to nonstandard boilers and pressure vessels, as addressed in WAC 296-104-215, must be authorized by the chief inspector.

Repairs and alterations may be made by an organization authorized by the jurisdiction and in possession of a valid Certificate of Authorization for use of the "R" symbol stamp, issued by the National Board provided such repairs/alterations are within the scope of the authorization.

Owner/user special inspectors may only accept repairs and alterations to boilers and unfired pressure vessels operated by their respective companies per RCW 70.79.130.

Documentation of repairs and alterations, in accordance with the requirements of the National Board Inspection Code (NBIC) as adopted in WAC 296-104-102, shall be submitted to the department.

[Statutory Authority: Chapter 70.79 RCW. 04-21-069, § 296-104-502, filed 10/19/04, effective 1/1/05. Statutory Authority: RCW 70.79.030, 70.79.040, 70.79.150, 70.79.290, 70.79.330, 70.79.350, and chapter 70.79 RCW. 02-23-036, § 296-104-502, filed 11/13/02, effective 12/14/02; 01-24-061, § 296-104-502, filed 11/30/01, effective 12/31/01. Statutory Authority: RCW 70.79.030, 70.79.040 and chapter 70.79 RCW. 00-21-024, § 296-104-502, filed 10/10/00, effective 11/13/00. Statutory Authority: RCW 70.79.030 and 70.79.040. 99-22-026, § 296-104-502, filed 10/26/99, effective 11/26/99;

98-22-024, § 296-104-502, filed 10/28/98, effective 11/28/98. Statutory Authority: RCW 70.79.040. 94-21-002, § 296-104-502, filed 10/5/94, effective 11/5/94.]

WAC 296-104-510 Repairs—When a lap seam crack is discovered along a riveted longitudinal joint on a boiler or unfired pressure vessel, what action is required and what repairs are allowed? A "lap seam crack" is a crack found in a riveted lap seam, extending parallel to the longitudinal joint and located either between or adjacent to rivet holes. Repairs to a "lap seam crack" on a shell or drum of any boiler or unfired pressure vessel is not allowed. The shell or drum of any boiler or unfired pressure vessel in which a lap seam crack is discovered shall be immediately discontinued from use.

[Statutory Authority: RCW 70.79.030, 70.79.040, 70.79.150, 70.79.290, 70.79.330, 70.79.350, and chapter 70.79 RCW. 04-01-194, § 296-104-510, filed 12/24/03, effective 1/24/04. Statutory Authority: RCW 70.79.030 and 70.79.040. 98-22-024, § 296-104-510, filed 10/28/98, effective 11/28/98; Part VII, § 3, filed 3/23/60.]

WAC 296-104-515 Repairs—Do riveted repairs to boilers and unfired pressure vessels require prior approval? Yes, riveted repairs to boilers and unfired pressure vessels requires prior approval by the chief inspector.

[Statutory Authority: RCW 70.79.030, 70.79.040, 70.79.150, 70.79.290, 70.79.330, 70.79.350, and chapter 70.79 RCW. 04-01-194, § 296-104-515, filed 12/24/03, effective 1/24/04. Statutory Authority: RCW 70.79.030 and 70.79.040. 98-22-024, § 296-104-515, filed 10/28/98, effective 11/28/98. Statutory Authority: RCW 70.79.030. 86-04-059 (Order 86-01), § 296-104-515, filed 2/4/86. Statutory Authority: RCW 70.79.030 and 70.79.330. 84-21-012 (Order 84-20), § 296-104-515, filed 10/5/84; Part VII, § 4, filed 3/23/60.]

WAC 296-104-520 Repairs—What are the requirements for repair of nonnuclear safety devices? The resetting, repairing, and restamping of safety valves and relief valves shall be done by a qualified manufacturer or valve repair organization holding a valid "V," "UV," or "VR" Certificate of Authorization issued by the National Board of Boiler and Pressure Vessel Inspectors. Section IV safety valves shall be repaired only by the valve manufacturer.

Boiler and pressure vessel users, however, may authorize external adjustments to be made to bring their installed safety valves and relief valves, except Section IV safety valves, back to the stamped set pressure when performed by the user's trained, qualified, regular, and full-time employee or this adjustment shall be witnessed and approved by a National Board Commissioned Inspector. Refer to Appendix "J" of the National Board Inspection Code as referenced in WAC 296-104-102 for guidelines in training and qualifying user employees. All such external adjustments shall be resealed showing the identification of the organization making the adjustments and the date.

Repairing of noncode relief or safety valves shall not be allowed, except as specified below. Noncode liquid relief valves installed prior to 1-1-85 shall be repaired by an organization holding a valid "V," "UV," or "VR" Certificate of Authorization, but need not be stamped.

[Statutory Authority: Chapter 70.79 RCW. 04-21-069, § 296-104-520, filed 10/19/04, effective 1/1/05. Statutory Authority: RCW 70.79.030, 70.79.040, 70.79.150, 70.79.290, 70.79.330, 70.79.350, and chapter 70.79 RCW. 04-01-194, § 296-104-520, filed 12/24/03, effective 1/24/04. Statutory Authority: RCW 70.79.030 and 70.79.040. 98-22-024, § 296-104-520, filed 10/28/98, effective 11/28/98; Part VII, § 5, filed 3/23/60.]

WAC 296-104-535 Repairs—What are the requirements for nuclear repairs/replacement? (1) Repairs/replacement to all nuclear components, appurtenances, and their supports shall conform to the rules contained in the ASME Section XI Code. The ASME Section XI Code edition and addenda shall be as specified in the owner in-service inspection program plan.

(2) Where a repair/replacement is performed, a report as required by ASME Section XI Code, signed by the owner and the Authorized Nuclear In-service Inspector (ANII) shall be submitted to the jurisdiction.

[Statutory Authority: RCW 70.79.030 and 70.79.040. 98-22-024, § 296-104-535, filed 10/28/98, effective 11/28/98.]

WAC 296-104-540 Repairs—What are the requirements for nuclear repairs of safety devices? All nuclear components shall be safe-guarded by safety devices, as specified in the ASME Section III Code.

(1) The resetting, repair, and restamping of these safety devices shall be performed only by organizations holding a valid ASME "N" Certificate of Authorization to repair ASME Section III Code safety devices.

(2) Nuclear plant owners with an approved ASME Section XI program, may authorize resetting, repairing or replacement of their safety devices.

(3) Resetting, repairing or replacement activities shall be witnessed and approved by an inspector, with appropriate National Board endorsements.

(4) All repaired safety devices shall be resealed showing the identification of the organization making the repair and the date.

[Statutory Authority: RCW 70.79.030 and 70.79.040. 98-22-024, § 296-104-540, filed 10/28/98, effective 11/28/98.]

WAC 296-104-700 What are the inspection fees—Examination fees—Certificate fees—Expenses? The following fees shall be paid by, or on behalf of, the owner or user upon the completion of the inspection. The inspection fees apply to inspections made by inspectors employed by the state.

	Internal	External
Heating boilers:		
Cast iron—All sizes	$30.30	$24.20
All other boilers less than 500 sq. ft.	$36.50	$24.20
500 sq. ft. to 2500 sq. ft.	$60.80	$30.30
Each additional 2500 sq. ft. of total heating surface, or any portion thereof	$24.20	$12.00
Power boilers:	Internal	External
Less than 100 sq. ft.	$30.30	$24.20
100 sq. ft. to less than 500 sq. ft.	$36.50	$24.20
500 sq. ft. to 2500 sq. ft.	$60.80	$30.30
Each additional 2500 sq. ft. of total heating surface, or any portion thereof	$24.20	$12.00
Pressure vessels:		

Automatic utility hot water supply heaters per RCW 70.79.090 $5.80

All other pressure vessels:

Square feet shall be determined by multiplying the length of the shell by its diameter.

	Internal	External
Less than 15 sq. ft.	$24.20	$18.10
15 sq. ft. to less than 50 sq. ft.	$36.50	$18.10
50 sq. ft. to 100 sq. ft.	$42.50	$24.20
For each additional 100 sq. ft. or any portion thereof	$42.50	$12.00

Certificate of inspection fees: For objects inspected, the certificate of inspection fee is $18.10 per object.

Boiler and pressure vessel installation/reinstallation permit (excludes inspection and certificate of inspection fee) $50.00

Nonnuclear shop inspections, field construction inspections, and special inspection services:

For each hour or part of an hour up to 8 hours $36.50

For each hour or part of an hour in excess of 8 hours $54.60

Nuclear shop inspections, nuclear field construction inspections, and nuclear triennial shop survey and audit:

For each hour or part of an hour up to 8 hours $54.60

For each hour or part of an hour in excess of 8 hours $85.20

Nonnuclear triennial shop survey and audit:

When state is authorized inspection agency:

For each hour or part of an hour up to 8 hours $36.50

For each hour or part of an hour in excess of 8 hours $54.60

When insurance company is authorized inspection agency:

For each hour or part of an hour up to 8 hours $54.60

For each hour or part of an hour in excess of 8 hours $85.20

Examination fee: A fee of $67.40 will be charged for each applicant sitting for an inspection examination(s).

Special inspector commission: An initial fee of $25 and an annual renewal fee of $10 along with an annual work card fee of $15.

Expenses shall include:

Travel time and mileage: The department shall charge for its inspectors' travel time from their offices to the inspection sites and return. The travel time shall be charged for at the same rate as that for the inspection, audit, or survey. The department shall also charge the current Washington office of financial management accepted mileage cost fees or the actual cost of purchased transportation. Hotel and meals: Actual cost not to exceed the office of financial management approved rate.

Washington state specials: For each vessel to be considered by the board for a Washington state special certificate, a fee of $338.00 must be paid to the department before the board meets to consider the vessel. The board may, at its discretion, prorate the fee when a number of vessels that are essentially the same are to be considered.

[Statutory Authority: Chapter 70.79 RCW. 04-21-069, § 296-104-700, filed 10/19/04, effective 1/1/05; 04-13-044, § 296-104-700, filed 6/10/04, effective 6/30/04. Statutory Authority: RCW 70.79.030, 70.79.040, 70.79.150, 70.79.290, 70.79.330, 70.79.350, and chapter 70.79 RCW. 04-01-194, § 296-104-700, filed 12/24/03, effective 1/24/04; 03-12-051, § 296-104-700, filed 5/30/03, effective 6/30/03; 02-23-036, § 296-104-700, filed 11/13/02, effective 12/14/02; 02-12-021, § 296-104-700, filed 5/28/02, effective 6/28/02; 01-24-061, § 296-104-700, filed 11/30/01, effective 12/31/01; 01-12-034, § 296-104-700, filed 5/29/01, effective 6/29/01. Statutory Authority: RCW 70.79.030, 70.79.040 and chapter 70.79 RCW. 00-21-024, § 296-104-700, filed 10/10/00, effective 11/13/00. Statutory Authority: RCW 70.79.030 and 70.79.040. 99-08-049, § 296-104-700, filed 4/1/99, effective 5/2/99; 98-09-064, § 296-104-700, filed 4/20/98, effective 5/21/98. Statutory Authority: RCW 70.79.040. 93-12-014, § 296-104-700, filed 5/21/93, effective 6/21/93. Statutory Authority: RCW 70.79.030 and 70.79.330. 84-21-012 (Order 84-20), § 296-104-700, filed 10/5/84; 84-11-016 (Order 84-09), § 296-104-700, filed 5/10/84; 82-24-025 (Order 82-36), § 296-104-700, filed 11/23/82, effective 1/1/83; Order 77-23, § 296-104-700, filed 11/8/77; Emergency Order 77-22, § 296-104-700, filed 11/8/77.]

WAC 296-104-701 What are the civil penalties? (1) An owner, user, or operator of a boiler or pressure vessel that violates a provision of chapter 70.79 RCW, or of the rules adopted under that chapter, is liable for a civil penalty based on the following schedule.

Operating under pressure a boiler or pressure vessel which the department has condemned, has issued a red tag or has suspended the inspection certificate:

First offense	$150.00
Second offense	$300.00
Each additional offense	$500.00

Each day of such unlawful operation shall be deemed a separate offense.

Operating under pressure a boiler or pressure vessel without a valid inspection certificate:

First offense	$ 50.00
Second offense	$100.00
Each additional offense	$200.00

Each day of such unlawful operation shall be deemed a separate offense.

Installation of a boiler or pressure vessel without meeting prior filing requirements of WAC 296-104-020:

First offense	$100.00
Second offense	$200.00
Each additional offense	$500.00

Performing a repair to a boiler or pressure vessel, involving welding to a pressure retaining part, without meeting requirements of WAC 296-104-502:

First offense	$150.00
Second offense	$300.00

Each additional offense $500.00

Performing an alteration to a boiler or pressure vessel without meeting requirements of WAC 296-104-502:

First offense $150.00
Second offense $300.00
Each additional offense $500.00

Performing resetting, repair or restamping of safety valves, safety relief valves, or rupture discs, without meeting requirements of WAC 296-104-520:

First offense $150.00
Second offense $300.00
Each additional offense $500.00

Failure of owner to notify chief inspector in case of accident which serves to render a boiler or unfired pressure vessel inoperative, as required by WAC 296-104-025:

Each offense $100.00

Failure to comply with a noncompliance report requirement:

Within 90 days $100.00
Within 91-180 days $250.00
Within 181-270 days $400.00
Within 271-360 days $500.00

(2) The inspection agency responsible for the inservice inspector of a boiler or unfired pressure vessel that violates a provision of chapter 296-104 WAC, or the rules adopted under that chapter, is liable for a civil penalty based on the following schedule.

Failure to file a report of inspection per WAC 296-104-040:

Each offense $50.00

Failure to apply a state serial number per WAC 296-104-140:

Each offense $50.00

Failure to attach a "Red TAG" per WAC 296-104-110:

Each offense $50.00

Each object (boiler or unfired pressure vessel) is considered a separate offense.

(3) The department shall by certified mail notify a person of its determination that the person has violated this section.

(4) Any person aggrieved by an order or act under the boiler and unfired pressure vessels law or under the rules and regulations may, within fifteen days after such order or act, appeal to the board of boiler rules.

(5) Each day that a violation occurs will be a separate offense. A violation will be a second or additional offense only if it occurs within one year from the first violation.

[Statutory Authority: Chapter 70.79 RCW. 04-21-069, § 296-104-701, filed 10/19/04, effective 1/1/05. Statutory Authority: RCW 70.79.030, 70.79.040 and chapter 70.79 RCW. 00-21-024, § 296-104-701, filed 10/10/00, effective 11/13/00. Statutory Authority: Chapter 70.79 RCW. 87-12-003 (Order 87-10), § 296-104-701, filed 5/21/87.]

Chapter 296-115 WAC
SAFETY REQUIREMENTS FOR CHARTER BOATS

WAC

296-115-001	Foreword.
296-115-005	Scope and application.
296-115-010	Appeal of decisions.
296-115-015	Definitions applicable to all sections of this chapter.
296-115-025	Vessel inspection and licensing.
296-115-030	Master's examination and licensing.
296-115-035	Specific inspection requirements.
296-115-040	Construction and arrangement.
296-115-050	General requirements.
296-115-060	Operations.
296-115-070	Rules of navigation.
296-115-100	Violations and setting of penalties.
296-115-120	Annual fee schedule.

WAC 296-115-001 Foreword. This chapter is adopted to implement chapter 88.04 RCW as revised in 1999. The purpose of these rules is to set reasonable guidelines and requirements to provide for the safety and health of passengers and crew on board passenger vessels. It is intended that these rules will be consistent with the rules adopted by the United States Coast Guard under 46 CFR Parts 166 to 199.

[Statutory Authority: RCW 49.17.010, [49.17].040, [49.17].050 and 1999 c 111. 00-23-100, § 296-115-001, filed 11/21/00, effective 1/1/01. Statutory Authority: RCW 49.17.040, 49.17.050, 49.17.240, chapters 42.30 and 43.22 RCW. 80-17-014 (Order 80-20), § 296-115-001, filed 11/13/80.]

WAC 296-115-005 Scope and application. (1) This chapter applies to vessels for hire that carry seven or more passengers when operated in waters within the jurisdiction of the state of Washington. These rules do not apply to vessels in the navigable waters of the United States subject to the jurisdiction of the United States Coast Guard.

(2) Pursuant to chapter 88.04 RCW, the director of the department of labor and industries will administer this chapter.

(3) All rules adopted by the United States Coast Guard pertaining to inland water passenger vessel service and navigation on inland waters will be applied to this chapter unless they conflict with specific provisions of this chapter or chapter 88.04 RCW.

(4) Special consideration. In applying the provisions of this section, the director may allow departures from the specific requirements when special circumstances or arrangements warrant such departures.

(5) The provisions of this chapter do not apply to:

(a) A vessel that is a charter boat but is being used by the documented or registered owner of the charter boat exclusively for the owner's own noncommercial or personal pleasure purposes;

(b) A vessel owned by a person or corporate entity which is donated and used by a person or nonprofit organization to transport passengers for charitable or noncommercial purposes, regardless of whether consideration is directly or indirectly paid to the owner;

(c) A vessel that is rented, leased, or hired by an operator to transport passengers for noncommercial or personal pleasure purposes;

(d) A vessel used exclusively for, or incidental to, an educational purpose; or

(e) A bare boat charter boat.

[Statutory Authority: RCW 49.17.010, [49.17].040, [49.17].050 and 1999 c 111. 00-23-100, § 296-115-005, filed 11/21/00, effective 1/1/01. Statutory Authority: Chapter 49.17 RCW. 91-24-017 (Order 91-07), § 296-115-005, filed 11/22/91, effective 12/24/91; 91-03-044 (Order 90-18), § 296-115-005, filed 1/10/91, effective 2/12/91. Statutory Authority: RCW 49.17.040, 49.17.050, 49.17.240, chapters 42.30 and 43.22 RCW. 80-17-014 (Order 80-20), § 296-115-005, filed 11/13/80.]

WAC 296-115-010 Appeal of decisions. (1) Any person aggrieved by a decision of the maritime specialist in policy & technical services (P&TS) may appeal the decision to the director within fifteen working days after receipt of the decision.

(2) The director will give the maritime specialist in P&TS notice of the appeal. The maritime specialist in P&TS will have ten working days to comment in writing. At the discretion of the director, an informal conference may be held with all affected parties invited to participate.

(3) The director must issue a determining order within twenty working days of the receipt of the appeal or within ten working days following conclusion of an informal conference.

[Statutory Authority: RCW 49.17.010, [49.17].040, [49.17].050 and 1999 c 111. 00-23-100, § 296-115-010, filed 11/21/00, effective 1/1/01. Statutory Authority: Chapter 49.17 RCW. 91-03-044 (Order 90-18), § 296-115-010, filed 1/10/91, effective 2/12/91. Statutory Authority: RCW 49.17.040, 49.17.050, 49.17.240, chapters 42.30 and 43.22 RCW. 80-17-014 (Order 80-20), § 296-115-010, filed 11/13/80.]

WAC 296-115-015 Definitions applicable to all sections of this chapter.

Note: Meaning of words. Unless the context indicates otherwise, words used in this chapter will have the meaning given in this section.

Approved means approved by the director; however, if a provision of this chapter requires approval by an agency or organization other than the department such as nationally recognized testing laboratories or the United States Coast Guard is required, then approval by the specified authority will be accepted.

Authorized person means a person approved or assigned by the employer to perform a specific type of duty or duties or be at a specific location or locations at the workplace.

Bare boat charter means the unconditional lease, rental, or charter of a boat by the owner, or his or her agent, to a person who by written agreement, or contract, assumes all responsibility and liability for the operation, navigation, and provisioning of the boat during the term of the agreement or contract, except when a captain or crew is required or provided by the owner or owner's agents to be hired by the charterer to operate the vessel.

Carrying passengers or cargo means the transporting of any person or persons or cargo on a vessel for a fee or other consideration.

CFR means Code of Federal Regulations.

Charter boat means a vessel or barge operating on waters of the state of Washington which is not inspected or licensed by the United States Coast Guard and over which the United States Coast Guard does not exercise jurisdiction and which is rented, leased, or chartered to carry more than six persons or cargo.

Commercial means any activity from which the operator, or the person chartering, renting, or leasing a vessel derives a profit, and/or which qualifies as a legitimate business expense under the Internal Revenue Statutes.

Competent person means someone who is capable of identifying existing and predictable hazards in the surroundings or working conditions that are unsanitary, hazardous, or dangerous to employees, and who has authorization to take prompt action to eliminate them.

Confined space means a space that:

(1) Is large enough and so configured that an employee can bodily enter and perform assigned work; and

(2) Has limited or restricted means for entry or exit (for example, tanks, vessels, silos, storage bins, hoppers, vaults, and pits are spaces that may have limited means of entry); and

(3) Is not designed for continuous employee occupancy.

Defect means any characteristic or condition that tends to weaken or reduce the strength of the tool, object, or structure of which it is a part.

Department means the department of labor and industries.

Director means the director of the department of labor and industries, or his/her designated representative.

Employer means any person, firm, corporation, partnership, business trust, legal representative, or other business entity that operates a passenger vessel for hire in this state and employs one or more employees or contracts with one or more persons, the essence of which is the personal labor of such persons. Any person, partnership, or business entity that has no employees, and is covered by the Industrial Insurance Act shall be considered both an employer and an employee.

Enclosed space means any space, other than a confined space, which is enclosed by bulkheads and overhead. It includes cargo holds, tanks, quarters, and machinery and boiler spaces.

Equipment means a system, part, or component of a vessel as originally manufactured, or a system, part, or component manufactured or sold for replacement, repair, or improvement of a system, part, or component of a vessel; an accessory or equipment for, or appurtenance to a vessel; or a marine safety article, accessory, or equipment, including radio equipment, intended for use by a person on board a vessel.

Hazard means a condition, potential or inherent, that is likely to cause injury, death, or occupational disease.

Hazardous substance means a substance that, because it is explosive, flammable, poisonous, corrosive, oxidizing, irritating, or otherwise harmful, is likely to cause death or injury, including all substances listed on the USCG hazardous materials list.

Inspection means the examination of vessels by the director or an authorized representative of the director.

Maritime specialist in P&TS means a technical and operations specialist in maritime issues located in the department of labor and industries' policy and technical services section.

Passenger means any person or persons, carried on board a vessel in consideration of the payment of a fee or other consideration.

Port means left hand side of a vessel as one faces the bow.

Starboard means right hand side of a vessel as one faces the bow.

Power driven vessel means any vessel propelled by machinery.

Qualified means one who, by possession of a recognized degree, certificate, or professional standing, or who by extensive knowledge, training, and experience, has successfully demonstrated the ability to solve problems relating to the subject matter, the work, or the project.

Safety and health standard means a standard that requires the adoption or use of one or more practices, means, methods, operations, or processes reasonably necessary or appropriate to provide safe or healthful employment and places of employment.

Should means recommended.

Substantial means constructed of such strength, of such material, and of such workmanship, that the object referred to will withstand all normal wear, shock, and usage.

Standard safeguard means a device intended to remove a hazard incidental to the machine, appliance, tool, or equipment to which the device is attached.

Standard safeguards shall be constructed of either metal, wood, other suitable material, or a combination of these. The final determination of the sufficiency of any safeguard rests with the director.

Suitable means that which fits, or has the qualities or qualifications to meet a given purpose, occasion, condition, function, or circumstance.

Under way means a vessel is not at anchor, or made fast to the shore, or aground.

USCG means the United States Coast Guard.

United States Coast Guard Navigation means rules International/Inland, Commandants Instruction M16672.29 as now adopted, or hereafter legally amended by the United States Coast Guard.

Vessel means every description of motorized watercraft, other than a bare boat charter boat, seaplane, or sailboat, used or capable of being used to transport more than six passengers or cargo on water for rent, lease, or hire.

Working day means a calendar day, except Saturdays, Sundays, and legal holidays as set forth in RCW 1.16.050, as now or hereafter amended. The time within which an act is to be done under the provisions of this chapter shall be computed by excluding the first working day and including the last working day.

Worker, personnel, man, person, employee, and other terms of like meaning, unless the context indicates otherwise means an employee of an employer who is employed in the business of his/her employer whether by way of manual labor or otherwise and every person in this state who is engaged in the employment of or who is working under an independent contract the essence of which is his/her personal labor for an employer whether by manual labor or otherwise.

[Statutory Authority: RCW 49.17.010, [49.17].040, [49.17].050 and 1999 c 111. 00-23-100, § 296-115-015, filed 11/21/00, effective 1/1/01. Statutory Authority: Chapter 49.17 RCW. 95-04-007, § 296-115-015, filed 1/18/95, effective 3/1/95; 91-24-017 (Order 91-07), § 296-115-015, filed 11/22/91, effective 12/24/91; 91-03-044 (Order 90-18), § 296-115-015, filed 1/10/91, effective 2/12/91. Statutory Authority: RCW 49.17.040, 49.17.050, 49.17.240, chapters 42.30 and 43.22 RCW. 80-17-014 (Order 80-20), § 296-115-015, filed 11/13/80.]

WAC 296-115-025 Vessel inspection and licensing. (1) The department must inspect all vessels to ensure they are safe and seaworthy at least once each year. The department may also inspect a vessel if requested to do so by the owner, operator, or master of the vessel, and after an explosion, fire, or any other accident involving the vessel.

(2) The department may inspect a vessel upon receipt of a complaint from any person or, at the discretion of the department, at any other time.

(3) The department will charge the owner of a vessel a fee for each certification or recertification inspection. This fee will be determined by the director. (See WAC 296-115-120 for fee schedule.)

(4) After the department has inspected a vessel and it is satisfied the vessel is safe and seaworthy, the department will issue a certificate of inspection for that vessel. The certificate will be valid for one year after the date of inspection.

(5) The certificate must set forth the date of the inspection, the names of the vessel and the owner, the number of lifeboats and life preservers required, the number of passengers allowed, and any other information the department may by rule require.

(6)(a) If at any time a vessel is found to be not safe or seaworthy, or not in compliance with the provisions of this chapter, the department may refuse to issue a certificate of inspection until the deficiencies have been corrected and may cancel any certificate of inspection currently issued.

(b) The department must give the owner of the vessel a written statement of the reason(s) the vessel was found to be unsafe, unseaworthy, or not in compliance with the provisions of this chapter, including a specific reference to the statute or rule with which the vessel did not comply.

(7) An inspector of the department may, upon the presentation of his or her credentials to the owner, master, operator, or agent in charge of a vessel, board the vessel without delay to make an inspection. The inspector must inform the owner, master, operator, or agent in charge that his or her intent is to inspect the vessel.

(8) During the inspection, the inspector must have access to all areas of the vessel. The inspector may question privately the owner, master, operator, or agent in charge of the vessel, or any crew member of or passenger on the vessel.

(9) If any person refuses to allow an inspector to board a vessel for an inspection, or refuses to allow access to any areas of the vessel, the department may request a warrant from the superior court for the county in which the vessel is located. The court will grant the warrant:

(a) If there is evidence that the vessel has sustained a fire, explosion, unintentional grounding, or has been involved in any other accident;

(b) If there is evidence that the vessel is not safe or seaworthy; or

(c) Upon a showing that the inspection furthers a general administrative plan for enforcing the safety requirements of the act.

(10) The owner or master of a vessel must post the certificate of inspection behind glass in a conspicuous area of the vessel.

(11) No person will operate a passenger vessel if the vessel does not have a valid certificate of inspection.

[Statutory Authority: RCW 49.17.010, [49.17].040, [49.17].050 and 1999 c 111. 00-23-100, § 296-115-025, filed 11/21/00, effective 1/1/01. Statutory Authority: Chapter 49.17 RCW. 91-03-044 (Order 90-18), § 296-115-025,

filed 1/10/91, effective 2/12/91. Statutory Authority: RCW 49.17.040, 49.17.050, 49.17.240, chapters 42.30 and 43.22 RCW. 80-17-014 (Order 80-20), § 296-115-025, filed 11/13/80.]

WAC 296-115-030 Master's examination and licensing. (1) The registered owner of passenger vessels or barges for hire is responsible to obtain an operator's license from the United States Coast Guard or the department for the master or operator of each vessel. A physical examination will be required.

(2) The department will penalize any person who acts as a master or operator on a vessel without having first received a United States Coast Guard or department license, or without having a valid license in his or her possession, or upon a vessel or class of vessels not specified in the license.

(3) The department may recommend suspension or revocation of a license to the United States Coast Guard for intemperance, incompetence, or a negligent, reckless, or willful disregard for duty.

[Statutory Authority: RCW 49.17.010, [49.17].040, [49.17].050 and 1999 c 111. 00-23-100, § 296-115-030, filed 11/21/00, effective 1/1/01. Statutory Authority: Chapter 49.17 RCW. 89-21-018 (Order 89-10), § 296-115-030, filed 10/10/89, effective 11/24/89. Statutory Authority: RCW 49.17.040, 49.17.050, 49.17.240, chapters 42.30 and 43.22 RCW. 80-17-014 (Order 80-20), § 296-115-030, filed 11/13/80.]

WAC 296-115-035 Specific inspection requirements. (1) Drydocking or hauling out.

Each vessel subject to the provisions in this section must be drydocked or hauled out at intervals not to exceed sixty months and the underwater hull and appendages, propellers, shafting, stern bearings, rudders, through-hull fittings, sea valves and strainers must be examined to determine that these items are in satisfactory condition.

(2) At the annual inspection the inspector must view the vessel afloat and conduct the following tests and inspections of the hull:

(a) Hull exterior and interior, bulkheads, and weather deck.

(b) Examine and test by operation all watertight closures in the hull, decks, and bulkheads.

(c) Inspect all railings and bulwarks and their attachment to the hull.

(d) Inspect weathertight closures above the weather deck and drainage or water from exposed decks and superstructure.

(3) At the annual inspection the inspector will examine and test the following items:

(a) Main propulsion machinery.

(b) Engine starting system.

(c) Engine control mechanisms.

(d) Auxiliary machinery.

(e) Fuel systems.

(f) Sea valves and bulkhead closure valves.

(g) Bilge and drainage systems.

(h) Electrical system, including circuit protection.

(4) Lifesaving and fire extinguishing equipment. At each annual inspection the inspector must inspect the life saving and fire extinguishing equipment for serviceability.

(5) Miscellaneous systems and equipment. At each annual inspection the marine dock inspector must inspect and test the vessel's steering apparatus, ground tackle, navigation lights, sanitary facilities, pressure vessels, and any other equipment aboard the vessel for serviceability and safety.

[Statutory Authority: RCW 49.17.010, [49.17].040, [49.17].050 and 1999 c 111. 00-23-100, § 296-115-035, filed 11/21/00, effective 1/1/01. Statutory Authority: Chapter 49.17 RCW. 91-03-044 (Order 90-18), § 296-115-035, filed 1/10/91, effective 2/12/91. Statutory Authority: RCW 49.17.040, 49.17.050, 49.17.240, chapters 42.30 and 43.22 RCW. 80-17-014 (Order 80-20), § 296-115-035, filed 11/13/80.]

WAC 296-115-040 Construction and arrangement. (1) Application.

(a) The requirements of this section apply to all vessels contracted for construction on or after June 7, 1979.

(b) Vessels constructed before the effective date of this chapter must be brought into substantial compliance with the requirements of this section. Where deviation exists and strict compliance is impractical, the director may grant a temporary variance to allow a modification or a permanent variance if the intent of subsection (1)(c) of this section is met.

(c) The intent of the regulations in this part is to provide for a sound, seaworthy vessel, reasonably fit for the service it is intended to provide, and to ensure that the materials, scantlings, fastenings, and workmanship meet this intent. Primary consideration must be given to the provision of a seaworthy hull, protection against fire, means of escape in case of casualty, guards and rails in hazardous places, ventilation of closed spaces, and necessary facilities for passengers and crew.

(2) Hull structure.

(a) In general, compliance with the standards of the United States Coast Guard rules for small passenger vessels or with the standards of a recognized classification society will be considered satisfactory evidence of the structural adequacy of a vessel.

(b) Special consideration will be given by the director to materials or structural requirements not contemplated by the standards of a recognized classification society.

(3) Watertight integrity and subdivision.

(a) All vessels carrying more than forty-nine passengers must have a collision bulkhead and watertight bulkheads (or sufficient air tankage or other internal flotation) so the vessel will remain afloat (with positive stability) with any one main compartment flooded.

(b) All watertight bulkheads required by this part must be of substantial construction so as to be able to remain watertight with water to the top of the bulkhead.

(c) Watertight bulkheads must extend intact to the bulkhead deck. Penetrations must be kept to a minimum and must be watertight.

(d) The weather deck on a flush deck vessel must be watertight and must not obstruct overboard drainage.

(e) Cockpits must be watertight except that companionways may be fitted if they are provided with watertight coamings and weathertight doors. Also, ventilation openings may be provided if they are situated as high in the cockpit as possible and the opening height does not exceed two inches.

(f) Cockpits must be self-bailing. The scuppers installed for this purpose must be located so as to be effective considering probable list and trim.

(g) Well decks must be watertight. Freeing ports may be installed if the provisions of applicable United States Coast Guard standards are followed.

(h) On vessels operating on protected waters, hatches may be weathertight. All hatches must be provided with covers capable of being secured.

(i) The number of openings in the vessel's sides below the weather deck must be kept to a minimum.

(j) Any openings in a vessel's sides, such as portlights, must comply with applicable United States Coast Guard standards.

(4) Stability.

(a) All vessels subject to the provisions of this section must have a stability test, except that the director may dispense with the requirements for a test if he deems that a test is not required, on the basis of sufficient evidence provided by the owner that the vessel's stability is satisfactory for the service for which it is intended.

(b) A letter stating that the vessel has met the stability requirements of this part must be posted in the pilothouse of each vessel.

[Statutory Authority: RCW 49.17.010, [49.17].040, [49.17].050 and 1999 c 111. 00-23-100, § 296-115-040, filed 11/21/00, effective 1/1/01. Statutory Authority: RCW 49.17.040, 49.17.050, 49.17.240, chapters 42.30 and 43.22 RCW. 80-17-014 (Order 80-20), § 296-115-040, filed 11/13/80.]

WAC 296-115-050 General requirements. (1) Application.

(a) The following rules are applicable to all vessels operated within the scope of this chapter.

(b) Where an existing vessel does not comply with a particular requirement of this section, the director may grant a temporary variance to allow time for modifications to be made.

(c) Where an existing vessel does not comply with a specific requirement contained herein but the degree of protection afforded is judged to be adequate for the service in which the vessel is used, the director may grant a permanent variance.

(2) Lifesaving equipment. Where equipment required by this section is required to be of an approved type, the equipment is required to be approved by the USCG.

(3) Lifesaving equipment required.

(a) All vessels carrying passengers must carry life floats or buoyant apparatus for all persons on board.

(b) All life floats or buoyant apparatus must be international orange in color.

(c) In the case of vessels operating not more than one mile from land, the director may permit operation with reduced amounts of life floats or buoyant apparatus, when, in his opinion, it is safe to do so.

(d) Lifeboats, life rafts, dinghies, dories, skiffs, or similar type craft may be substituted for the required life floats or buoyant apparatus if the substitution is approved by the director.

(e) Life floats, buoyant apparatus, or any authorized substitute must have the following equipment:

(i) A life line around the sides at least equivalent to 3/8-inch manila, festooned in bights of at least three feet, with a seine float in the center of each bight.

(ii) Two paddles or oars not less than four feet in length.

(iii) A painter of at least thirty feet in length and of at least two-inch manila or the equivalent.

(f) All vessels must have an approved adult type life preserver for each person carried, with at least ten percent additional of a type suitable for children.

(g) Life preservers must be stowed in readily accessible places in the upper part of the vessel, and each life preserver shall be marked with the vessel's name.

(h) All vessels must carry at least one life ring buoy of an approved type with sixty feet of line attached.

(i) The life ring buoy must be carried in a readily accessible location and must be capable of being cast loose at any time.

(4) Fire protection.

(a) The general construction of a vessel must minimize fire hazards.

(b) Internal combustion engine exhausts, boiler and galley uptakes, and similar sources of ignition must be kept clear of and suitably insulated from woodwork or other combustible material.

(c) Lamp, paint, and oil lockers and similar storage areas for flammable or combustible liquids must be constructed of metal or lined with metal.

(5) Fire protection equipment. Equipment required by this section, when required to be of an approved type, must be of a type approved by the USCG or other agency acceptable to the director.

(6) Fire pumps.

(a) All vessels carrying more than forty-nine passengers must carry an approved power fire pump, and all other vessels must carry an approved hand fire pump. These pumps must be provided with a suitable suction and discharge hose. These pumps may also serve as bilge pumps.

(b) Vessels required to have a power fire pump must also have a fire main system, including fire main, hydrants, hose, and nozzles. The fire hose may be a good commercial grade garden hose of not less than 5/8 inch size.

(7) Fixed fire extinguishing system.

(a) All vessels powered by internal combustion engines using gasoline or other fuel having a flashpoint of 110°F or lower, must have a fixed fire extinguishing system to protect the machinery and fuel tank spaces.

(b) This system must be an approved type using carbon dioxide and have a capacity sufficient to protect the space.

(c) Controls for the fixed system must be installed in an accessible location outside the space protected.

(8) Fire axe. All vessels must have one fire axe located in or near the pilothouse.

(9) Portable fire extinguishers.

(a) All vessels must have a minimum number of portable fire extinguishers of an approved type. The number required will be determined by the director.

(b) Portable fire extinguishers must be inspected at least once a month. Extinguishers found defective must be serviced or replaced.

(c) Portable fire extinguishers must be serviced at least once a year. The required service must consist of discharging and recharging foam and dry chemical extinguishers and weighing and inspecting carbon dioxide extinguishers.

(d) Portable fire extinguishers must be hydrostatically tested at intervals not to exceed those specified in WAC 296-

24-59211(2) and Table I (after August 31, 2001, see WAC 296-800-300).

(e) Portable fire extinguishers of the vaporizing liquid type such as carbon tetrachloride and other toxic vaporizing liquids are prohibited and must not be carried on any vessel.

(f) Portable fire extinguishers must be mounted in brackets or hangers near the space protected. The location must be marked in a manner satisfactory to the director.

(10) Means of escape.

(a) Except as otherwise provided in this section, all vessels must be provided with not less than two avenues of escape from all general areas accessible to the passengers or where the crew may be quartered or normally employed. The avenues must be located so that if one is not available the other may be. At least one of the avenues should be independent of watertight doors.

(b) Where the length of the compartment is less than twelve feet, one vertical means of escape will be acceptable under the following conditions:

(i) There is no source of fire in the space, such as a galley stove or heater and the vertical escape is remote from the engine and fuel tank space; or

(ii) The arrangement is such that the installation of two means of escape does not materially improve the safety of the vessel or those aboard.

(11) Ventilation.

(a) All enclosed spaces within the vessel must be properly vented or ventilated. Where such openings would endanger the vessel under adverse weather conditions, means must be provided to close them.

(b) All crew and passenger space must be adequately ventilated in a manner suitable to the purpose of the space.

(12) Crew and passenger accommodations.

(a) Vessels with crew members living aboard must have suitable accommodations.

(b) Vessels carrying passengers must have fixed seating for the maximum number of passengers permitted to be carried.

(c) Fixed seating must be installed with spacing to provide for ready escape in case of fire or other casualty.

(d) Fixed seating must be installed as follows, except that special consideration may be given by the director if escape over the side can be readily accomplished through windows or other openings in the way of the seats:

(i) Aisles not over fifteen feet long must be not less than twenty-four inches wide.

(ii) Aisles over fifteen feet long must be not less than thirty inches wide.

(iii) Where seats are in rows the distance from seat front to seat front must be not less than thirty inches.

(e) Portable or temporary seating may be installed but must be arranged in general as provided for fixed seating.

(13) Toilet facilities and drinking water.

(a) Vessels must be provided with toilets and wash basins as specified in WAC 296-800-230, except that in the case of vessels used exclusively on short runs of approximately thirty minutes or less, the director may approve other arrangements.

(b) All toilets and wash basins must be fitted with adequate plumbing. Facilities for men and women must be in separate compartments, except in the case of vessels carrying forty-nine passengers and less, the director may approve other arrangements.

(c) Potable drinking water must be provided for all passengers and crew. The provisions of WAC 296-800-230 apply.

(d) Covered trash containers must be provided in passenger areas.

(14) Rails and guards.

(a) Except as otherwise provided in this section, rails or equivalent protection must be installed near the periphery of all weather decks accessible to passengers and crews. Where space limitations make deck rails impractical, such as at narrow catwalks in the way of deckhouse sides, hand grabs may be substituted.

(b) Rails must consist of evenly spaced courses. The spacing must not be greater than twelve inches except as provided in WAC 296-115-050 (14)(f). The lower rail courses may not be required where all or part of the space below the upper rail course is fitted with a bulwark, chain link fencing, wire mesh or the equivalent.

(c) On passenger decks of vessels engaged in ferry or excursion type operation, rails must be at least forty-two inches high. The top rail must be pipe, wire, chain, or wood and must withstand at least two hundred pounds of side loading. The space below the top rail must be fitted with bulwarks, chain link fencing, wire mesh, or the equivalent.

(d) On vessels in other than passenger service, the rails must be not less than thirty-six inches high, except that where vessels are used in special service, the director may approve other arrangements, but in no case less than thirty inches.

(e) Suitable storm rails or hand grabs must be installed where necessary in all passageways, at deckhouse sides, and at ladders and hatches where passengers or crew might have normal access.

(f) Suitable covers, guards, or rails must be installed in the way of all exposed and hazardous places such as gears or machinery. (See chapter 296-806 WAC, Machine safety for detailed requirements.)

(15) Machinery installation.

(a) Propulsion machinery.

(i) Propulsion machinery must be suitable in type and design for the propulsion requirements of the hull in which it is installed. Installations meeting the requirements of the USCG or other classification society will be considered acceptable to the director.

(ii) Installations using gasoline as a fuel must meet the requirements of applicable USCG standards.

(iii) Installations using diesel fuel must meet the requirements of applicable USCG standards.

(b) Auxiliary machinery and bilge systems.

(i) All vessels must be provided with a suitable bilge pump, piping and valves for removing water from the vessel.

(ii) Vessels carrying more that forty-nine passengers must have a power operated bilge pump. The source of power must be independent of the propulsion machinery. Other vessels must have a hand operated bilge pump, but may have a power operated pump if it is operated by an independent power source.

(c) Steering apparatus and miscellaneous systems.

(i) All vessels must be provided with a suitable steering apparatus.

(ii) All vessels must be provided with navigation lights and shapes, whistles, fog horns, and fog bells as required by the USCG rules of navigation.

(iii) All vessels must be equipped with a suitable number of portable battery lights for emergency purposes.

(d) Electrical installations. The electrical installations of all vessels must be at least equal to applicable USCG standards, or as approved by the director.

[Statutory Authority: RCW 49.17.010, 49.17.040, 49.17.050, and 49.17.060. 04-14-028, § 296-115-050, filed 6/29/04, effective 1/1/05; 03-18-090, § 296-115-050, filed 9/2/03, effective 11/1/03. Statutory Authority: RCW 49.17.010, [49.17].040, [49.17].050 and 1999 c 111. 00-23-100, § 296-115-050, filed 11/21/00, effective 1/1/01. Statutory Authority: RCW 49.17.040, 49.17.050, 49.17.240, chapters 42.30 and 43.22 RCW. 80-17-014 (Order 80-20), § 296-115-050, filed 11/13/80.]

WAC 296-115-060 Operations. (1) This section applies to all passenger vessel operations within the scope of this chapter.

(2) No person will rent, lease, or hire out a charter boat, nor carry, advertise for the carrying of, nor arrange for the carrying of, more than six passengers on a vessel for a fee or other consideration on the waters of the state unless the vessel is in compliance with the provisions of this chapter.

(3) Notice of casualty.

(a) The owner or person in charge of any vessel involved in a marine accident or casualty involving any of the following must report the incident immediately to the department.

(i) Damage to property in excess of one thousand five hundred dollars.

(ii) Major damage affecting the seaworthiness or safety of the vessel.

(iii) Loss of life or an injury to a person that incapacitates the person for more than seventy-two hours.

(b) The report must be in writing to the director and upon receipt of the report the director may request an investigation by a marine dock inspector.

(4) Miscellaneous operating requirements.

(a) In the case of collision, accident, or other casualty involving a vessel the operator, must, so far as he can do so without serious danger to his own vessel or persons aboard, render any necessary assistance to other persons affected by the collision, accident, or casualty to save them from danger. He must also give his name and address and the name of his vessel to any person injured and to the owner of any property damaged.

(b) The person in charge of the vessel must see that the provisions of the certificate of inspection are strictly adhered to. This will not be construed as limiting the person in charge from taking any action in an emergency that he deems necessary to help vessels in distress or to prevent loss of life.

(c) Persons operating vessels must comply with the provisions of the USCG rules of the road for inland waters.

(d) The operator of a vessel must test the vessel's steering gear, signaling whistle, controls, and communication system before getting under way for the day's operation.

(e) Vessels using fuel having a flashpoint of 110°F or lower must not take on fuel when passengers are on board.

(f) All vessels must enforce "no smoking" provisions when fueling. Locations on the vessel where flammable or combustible liquids are stored must be posted "no smoking."

(g) All vessels must prepare and post emergency check-off lists in a conspicuous place accessible to crew and passengers, covering the following:

(i) Man overboard.

(ii) Fire.

(h) The persons in charge must conduct emergency drills to ensure that the crew is familiar with their duties in an emergency.

(i) The carriage of hazardous substances is prohibited on vessels. However, the director may authorize a vessel to carry specific types and quantities of hazardous substances if he deems it necessary.

(j) All areas accessible to passengers or crew must be kept in a clean and sanitary condition. All walking surfaces must be free of slipping or tripping hazards and in good repair.

(5) First-aid training. There must be present or available on all passenger vessels at all times, a person holding a valid certificate of first-aid training.

(6) Valid certification must be achieved by passing a course of first-aid instruction and participation in practical application of the following subject matter.

Bleeding control and bandaging.

Practical methods of artificial respiration, including mouth to mouth and mouth to nose resuscitation.

Closed chest heart massage.

Poisons.

Shock, unconsciousness, stroke.

Burns, scalds.

Sunstroke, heat exhaustion.

Frostbite, freezing, hypothermia.

Strains, sprains, hernias.

Fractures, dislocations.

Proper transportation of the injured.

Bites, stings.

Subjects covering specific health hazards likely to be encountered by coworkers of first-aid students enrolled in the course.

(7) First-aid equipment. A first-aid kit or first-aid room must be provided on all passenger vessels. The size and quantity of first-aid supplies or equipment required must be determined by the number of persons normally dependent upon each kit or equipment. The first-aid kit or supplies must be in a weatherproof container with individually sealed packages for each type of item. The first-aid station or kit location must be posted or on the container.

[Statutory Authority: RCW 49.17.010, [49.17].040, [49.17].050 and 1999 c 111. 00-23-100, § 296-115-060, filed 11/21/00, effective 1/1/01. Statutory Authority: Chapter 49.17 RCW. 91-03-044 (Order 90-18), § 296-115-060, filed 1/10/91, effective 2/12/91. Statutory Authority: RCW 49.17.040, 49.17.050, 49.17.240, chapters 42.30 and 43.22 RCW. 80-17-014 (Order 80-20), § 296-115-060, filed 11/13/80.]

WAC 296-115-070 Rules of navigation. The operation and navigation of all vessels subject to this chapter must be in strict accordance with the United States Coast Guard Navigation Rules International/Inland, Commandants Instruction M16672.29 as now adopted, or hereafter legally amended by the United States Coast Guard.

(1) A copy of the United States Coast Guard Navigation Rules International/Inland, Commandants Instruction

M16672.29, must be on board all vessels subject to this chapter at all times when the vessel is under way.

(2) At least annually, where applicable, the operator of each vessel must "swing the vessel" to determine the actual compass readings in relation to true compass headings, and must maintain a record on board the vessel.

[Statutory Authority: RCW 49.17.010, [49.17].040, [49.17].050 and 1999 c 111. 00-23-100, § 296-115-070, filed 11/21/00, effective 1/1/01. Statutory Authority: Chapter 49.17 RCW. 91-03-044 (Order 90-18), § 296-115-070, filed 1/10/91, effective 2/12/91. Statutory Authority: RCW 49.17.040, 49.17.050, 49.17.240, chapters 42.30 and 43.22 RCW. 80-17-014 (Order 80-20), § 296-115-070, filed 11/13/80.]

WAC 296-115-100 Violations and setting of penalties. (1) Violations of the mandatory provisions of this chapter will be subject to penalty. The amount of the penalty will be assessed in accordance with the guidelines and fixed schedules contained herein.

(2) Fixed schedule penalties.

(a) Failure to display certificate of inspection as required: Fifty dollars to owner of the vessel.

(b) Operation of vessel in passenger service without a valid certificate of inspection: To owner of vessel, two hundred dollars per violation; to person who operates vessel, one hundred dollars per violation.

(c) Operation of vessel in passenger service while not in possession of valid USCG/state of Washington operator's license: One hundred dollars per violation to owner of vessel.

[Statutory Authority: RCW 49.17.010, [49.17].040, [49.17].050 and 1999 c 111. 00-23-100, § 296-115-100, filed 11/21/00, effective 1/1/01. Statutory Authority: Chapter 49.17 RCW. 91-03-044 (Order 90-18), § 296-115-100, filed 1/10/91, effective 2/12/91. Statutory Authority: RCW 49.17.040, 49.17.050, 49.17.240, chapters 42.30 and 43.22 RCW. 80-17-014 (Order 80-20), § 296-115-100, filed 11/13/80.]

WAC 296-115-120 Annual fee schedule. (1) The annual license fee for passenger vessels or barges is $250.00 plus $2.00 per ton for each vessel.

(2) The fee for an operator's license for passenger vessels or barges is $50.00 for the first year; this covers application and test costs. The renewal fee is $25.00 annually.

(3) Additional inspection service when required is at the rate of $25.00 per hour, plus travel and per diem.

[Statutory Authority: Chapter 49.17 RCW. 89-21-018 (Order 89-10), § 296-115-120, filed 10/10/89, effective 11/24/89. Statutory Authority: RCW 49.17.040, 49.17.050, 49.17.240, chapters 42.30 and 43.22 RCW. 80-17-014 (Order 80-20), § 296-115-120, filed 11/13/80.]

Chapter 296-125 WAC

NONAGRICULTURAL EMPLOYMENT OF MINORS

WAC

296-125-010 Applicability.
296-125-015 Definitions.
296-125-018 Minimum age for employment.

MASTER BUSINESS LICENSE/MINOR WORK PERMIT ENDORSEMENT

296-125-0200 If I plan to employ minors in my business, what general requirements do I have to satisfy?
296-125-0210 Do I need minor work permit endorsements for my business?
296-125-0211 What if I employ minors at several different workplaces?
296-125-0220 Are there working condition restrictions which may be placed on my minor work permit endorsements?
296-125-0221 Do my minor work permit endorsements expire?
296-125-0222 Can I renew my minor work permit endorsements?
296-125-0223 How long must my minor work permit endorsements stay in force?
296-125-0224 Do I need to post my minor work permit endorsements?
296-125-0230 Can the department of labor and industries refuse to issue or renew, revoke, suspend or modify my minor work permit endorsements?
296-125-0231 Can I appeal the department's refusal to issue or renew, or to revoke, suspend or modify my minor work permit endorsements?
296-125-024 House-to-house sales.

PARENT/SCHOOL AUTHORIZATION FORMS

296-125-0260 If I employ minors, do I need authorization from the parent or school?
296-125-0261 Where can I obtain a parent/school authorization form?
296-125-0262 Do parent/school authorization forms expire?
296-125-0263 What information must a minor provide on the parent/school authorization form?
296-125-0264 What information must an employer provide on the parent/school authorization form?
296-125-0265 What information must a parent or legal guardian provide on the parent/school authorization form?
296-125-0266 What information must a school provide on the parent/school authorization form?
296-125-0267 What if a minor is no longer attending school?
296-125-0268 Can a parent, legal guardian or school revoke the work authorization previously given on the parent/school authorization form?
296-125-027 Hours of work for minors.

RECORDKEEPING

296-125-0275 When I employ minors, what recordkeeping requirements must I satisfy?
296-125-0280 What is the department's enforcement authority?

MEAL AND REST BREAKS FOR MINORS

296-125-0285 What regulations apply to meal and rest breaks for my fourteen-year-old and fifteen-year-old minors?
296-125-0287 What regulations apply to meal and rest breaks for my sixteen-year-old and seventeen-year-old employees?
296-125-030 Prohibited and hazardous employment—All minors.
296-125-033 Prohibited and hazardous employment—Special restrictions for minors under the age of 16.
296-125-043 Minimum wages—Minors.

VARIANCES

296-125-0600 What is a variance?
296-125-0610 How do I obtain a variance?
296-125-0611 What does "good cause" mean?
296-125-0620 Are there special requirements that I must satisfy if I request a variance to employ minors under the age of sixteen in house-to-house sales?
296-125-0640 What criteria will be used to evaluate my variance request?
296-125-0650 Do my variances expire?
296-125-0651 Can my variances be renewed?
296-125-0660 Can the department of labor and industries revoke, suspend, or modify my variances?
296-125-0670 Can I appeal the department's action to revoke, suspend or modify my variances?

SPECIAL VARIANCES

296-125-0700 What is a special variance?
296-125-0710 What criteria will be followed in evaluating my special variance request?
296-125-0720 How can a school district or individual private school qualify for participation in the special variance process?
296-125-0721 Where can a school district or individual private school obtain a copy of the special variance process enrollment form?
296-125-0722 In addition to completing the enrollment form, what other requirements must be satisfied before a school district or private school can participate in the special variance program?
296-125-0723 What is the employer's responsibility in providing information to the minor, the minor's parent or legal guardian, and school officials?

296-125-0730 What other information about special variance requests is important?
296-125-0740 What are the consequences of submitting an incomplete special variance request form?
296-125-0741 Can a school district or private school appeal the department's decision to revoke its participation in the special variance program?
296-125-0750 What are the criteria used by a school to evaluate special variance requests?
296-125-0760 Do special variances expire?
296-125-0770 Can the department of labor and industries revoke, suspend, or modify a special variance?
296-125-0771 Can the parties to a special variance revoke it?
296-125-0772 Can the department's action to refuse to issue or renew, revoke, suspend or modify a special variance be appealed?

DISPOSITION OF SECTIONS FORMERLY CODIFIED IN THIS CHAPTER

296-125-019 Prerequisites to employing minors. [Statutory Authority: Chapters 43.22 and 49.12 RCW, RCW 26.28.060 and 43.17.060. 93-01-068, § 296-125-019, filed 12/11/92, effective 3/1/93.] Repealed by 99-15-071, filed 7/19/99, effective 8/19/99. Statutory Authority: Chapter 49.12 RCW.

296-125-020 Minor work permits. [Statutory Authority: Chapters 43.22 and 49.12 RCW, RCW 26.28.060 and 43.17.060. 93-01-068, § 296-125-020, filed 12/11/92, effective 3/1/93; Order 76-15, § 296-125-020, filed 5/17/76; Order 71-5, § 296-125-020, filed 5/26/71, effective 7/1/71; Section C, filed 9/18/63; Rules (part), filed 3/23/60.] Repealed by 99-02-041, filed 12/31/98, effective 1/31/99. Statutory Authority: RCW 49.12.121.

296-125-023 Posting. [Order 76-15, § 296-125-023, filed 5/17/76.] Repealed by 93-01-068, filed 12/11/92, effective 3/1/93. Statutory Authority: Chapters 43.22 and 49.12 RCW, RCW 26.28.060 and 43.17.060.

296-125-025 Conditions governing issuance of permits. [Order 74-9, § 296-125-025, filed 3/13/74, effective 4/15/74; Order 71-5, § 296-125-025, filed 5/26/71, effective 7/1/71; Section D, filed 9/18/63; Rules (part), filed 3/12/60.] Repealed by Order 76-15, filed 5/17/76.

296-125-026 Parent/school authorization forms. [Statutory Authority: Chapters 43.22 and 49.12 RCW, RCW 26.28.060 and 43.17.060. 93-01-068, § 296-125-026, filed 12/11/92, effective 3/1/93.] Repealed by 99-02-041, filed 12/31/98, effective 1/31/99. Statutory Authority: RCW 49.12.121.

296-125-028 Meal and rest breaks for minors. [Statutory Authority: Chapters 43.22 and 49.12 RCW, RCW 26.28.060 and 43.17.060. 93-01-068, § 296-125-028, filed 12/11/92, effective 3/1/93.] Repealed by 99-02-041, filed 12/31/98, effective 1/31/99. Statutory Authority: RCW 49.12.121.

296-125-035 Working conditions. [Section F, filed 9/18/63; Rules (part), filed 3/23/60.] Repealed by Order 71-5, filed 5/26/71, effective 7/1/71.

296-125-040 Issuance of permit. [Order 71-5, § 296-125-040, filed 5/26/71, effective 7/1/71; Section G, filed 9/18/63; Rules (part), filed 3/23/60.] Repealed by Order 76-15, filed 5/17/76.

296-125-045 Denial of permit. [Order 71-5, § 296-125-045, filed 5/26/71, effective 7/1/71; Section H, filed 9/18/63.] Repealed by Order 76-15, filed 5/17/76.

296-125-050 Posting, recordkeeping, and authority to enter, inspect, and investigate. [Statutory Authority: Chapters 43.22 and 49.12 RCW, RCW 26.28.060 and 43.17.060. 93-01-068, § 296-125-050, filed 12/11/92, effective 3/1/93; Order 76-15, § 296-125-050, filed 5/17/76; Order 71-5, § 296-125-050, filed 5/26/71, effective 7/1/71; Section I, filed 9/18/63; Rules (part), filed 3/23/60.] Repealed by 99-02-041, filed 12/31/98, effective 1/31/99. Statutory Authority: RCW 49.12.121.

296-125-055 Revocation of permits. [Order 76-15, § 296-125-055, filed 5/17/76; Order 71-5, § 296-125-055, filed 5/26/71, effective 7/1/71; Section J, filed 9/18/63; Rules (part), filed 3/23/60.] Repealed by 93-01-068, filed 12/11/92, effective 3/1/93. Statutory Authority: Chapters 43.22 and 49.12 RCW, RCW 26.28.060 and 43.17.060.

296-125-060 Variances. [Statutory Authority: Chapters 43.22 and 49.12 RCW, RCW 26.28.060 and 43.17.060. 93-01-068, § 296-125-060, filed 12/11/92, effective 3/1/93; Order 76-15, § 296-125-060, filed 5/17/76.] Repealed by 99-02-041, filed 12/31/98, effective 1/31/99. Statutory Authority: RCW 49.12.121.

296-125-070 Special variances. [Statutory Authority: Chapters 43.22 and 49.12 RCW, RCW 26.28.060 and 43.17.060. 93-01-068 and 93-04-112, § 296-125-070, filed 12/11/92 and 2/3/93, effective 3/1/93 and 7/1/93.] Repealed by 99-02-041, filed 12/31/98, effective 1/31/99. Statutory Authority: RCW 49.12.121.

296-125-110 Applicability. [Statutory Authority: RCW 43.22.270 and 1989 c 216. 89-23-003, § 296-125-110, filed 11/3/89, effective 11/20/89.] Repealed by 93-01-068, filed 12/11/92, effective 3/1/93. Statutory Authority: Chapters 43.22 and 49.12 RCW, RCW 26.28.060 and 43.17.060.

296-125-115 Definitions. [Statutory Authority: RCW 43.22.270 and 1989 c 216. 89-23-003, § 296-125-115, filed 11/3/89, effective 11/20/89.] Repealed by 93-01-068, filed 12/11/92, effective 3/1/93. Statutory Authority: Chapters 43.22 and 49.12 RCW, RCW 26.28.060 and 43.17.060.

296-125-120 Filing of registration certificate. [Statutory Authority: RCW 43.22.270 and 1989 c 216. 89-23-003, § 296-125-120, filed 11/3/89, effective 11/20/89.] Repealed by 93-01-068, filed 12/11/92, effective 3/1/93. Statutory Authority: Chapters 43.22 and 49.12 RCW, RCW 26.28.060 and 43.17.060.

296-125-125 Application for initial and renewed registration. [Statutory Authority: RCW 43.22.270 and 1989 c 216. 89-23-003, § 296-125-125, filed 11/3/89, effective 11/20/89.] Repealed by 93-01-068, filed 12/11/92, effective 3/1/93. Statutory Authority: Chapters 43.22 and 49.12 RCW, RCW 26.28.060 and 43.17.060.

296-125-130 Posting. [Statutory Authority: RCW 43.22.270 and 1989 c 216. 89-23-003, § 296-125-130, filed 11/3/89, effective 11/20/89.] Repealed by 93-01-068, filed 12/11/92, effective 3/1/93. Statutory Authority: Chapters 43.22 and 49.12 RCW, RCW 26.28.060 and 43.17.060.

296-125-135 Identification cards. [Statutory Authority: RCW 43.22.270 and 1989 c 216. 89-23-003, § 296-125-135, filed 11/3/89, effective 11/20/89.] Repealed by 93-01-068, filed 12/11/92, effective 3/1/93. Statutory Authority: Chapters 43.22 and 49.12 RCW, RCW 26.28.060 and 43.17.060.

296-125-140 House to house employment standards. [Statutory Authority: RCW 43.22.270 and 1989 c 216. 89-23-003, § 296-125-140, filed 11/3/89, effective 11/20/89.] Repealed by 93-01-068, filed 12/11/92, effective 3/1/93. Statutory Authority: Chapters 43.22 and 49.12 RCW, RCW 26.28.060 and 43.17.060.

296-125-145 Transporting minors out-of-state. [Statutory Authority: RCW 43.22.270 and 1989 c 216. 89-23-003, § 296-125-145, filed 11/3/89, effective 11/20/89.] Repealed by 93-01-068, filed 12/11/92, effective 3/1/93. Statutory Authority: Chapters 43.22 and 49.12 RCW, RCW 26.28.060 and 43.17.060.

296-125-155 Recordkeeping. [Statutory Authority: RCW 43.22.270 and 1989 c 216. 89-23-003, § 296-125-155, filed 11/3/89, effective 11/20/89.] Repealed by 93-01-068, filed 12/11/92, effective 3/1/93. Statutory Authority: Chapters 43.22 and 49.12 RCW, RCW 26.28.060 and 43.17.060.

296-125-160 Revocation of registration certificate. [Statutory Authority: RCW 43.22.270 and 1989 c 216. 89-23-003, § 296-125-160, filed 11/3/89, effective 11/20/89.] Repealed by 93-01-068, filed 12/11/92, effective 3/1/93. Statutory Authority: Chapters 43.22 and 49.12 RCW, RCW 26.28.060 and 43.17.060.

296-125-165 Denial of registration certificate. [Statutory Authority: RCW 43.22.270 and 1989 c 216. 89-23-003, § 296-125-165, filed 11/3/89, effective 11/20/89.] Repealed by 93-01-068, filed 12/11/92, effective 3/1/93. Statutory Authority: Chapters 43.22 and 49.12 RCW, RCW 26.28.060 and 43.17.060.

296-125-170 Employment of minors under the age of sixteen. [Statutory Authority: RCW 43.22.270 and 1989 c 216. 89-23-003, § 296-125-170, filed 11/3/89, effective 11/20/89.] Repealed by 93-01-068, filed 12/11/92, effective 3/1/93. Statutory Authority: Chapters 43.22 and 49.12 RCW, RCW 26.28.060 and 43.17.060.

296-125-175 Length of registration period. [Statutory Authority: RCW 43.22.270 and 1989 c 216. 89-23-003, § 296-125-175, filed 11/3/89, effective 11/20/89.] Repealed by 93-01-068, filed 12/11/92, effective 3/1/93. Statutory

Authority: Chapters 43.22 and 49.12 RCW, RCW 26.28.060 and 43.17.060.

WAC 296-125-010 Applicability. This chapter applies to every person that employs one or more minors, or who permits, allows, or suffers one or more minors to work at a site or workplace, on premises, or under work conditions controlled by that employer, except for those employers statutorily exempted, as follows: This chapter does not apply to newspaper vendors or carriers; to domestic or casual labor in or about private residences; to parents or stepparents who employ their own children for house-to-house sales; to agricultural labor as defined by RCW 50.04.150; or, to employers expressly exempted by federal statute from the coverage of state law.

[Statutory Authority: Chapters 43.22 and 49.12 RCW, RCW 26.28.060 and 43.17.060. 93-01-068, § 296-125-010, filed 12/11/92, effective 3/1/93; Order 76-15, § 296-125-010, filed 5/17/76; Order 74-9, § 296-125-010, filed 3/13/74, effective 4/15/74; Order 71-5, § 296-125-010, filed 5/26/71, effective 7/1/71; Section A, filed 9/18/63; Rules (part), filed 3/23/60.]

WAC 296-125-015 Definitions. For the purposes of this chapter:

(1) "Department" means the Washington state department of labor and industries.

(2) "Employ" means to engage, suffer or permit to work, and includes entering into any arrangement, including a contract, whether implied, express, oral, or written, with a minor whereby the minor works in house-to-house sales except when a minor is working in house-to-house sales for her or his parent or stepparent. The term "employ" does not include newspaper vendors or carriers, the use of domestic or casual labor in or about private residences, agricultural labor as defined by RCW 50.04.150, or the use of voluntary or donated services performed for an educational, charitable, religious, or nonprofit organization and without expectation or contemplation of compensation for the services performed.

(3) "Employee" means any minor employed by an employer, including minors who work pursuant to any arrangement, including contract, whether implied, express, oral, or written in house-to-house sales, but does not include newspaper vendors or carriers, domestic or casual labor in or about private residences, minors employed in agricultural labor as defined by RCW 50.04.150, or minors employed for house-to-house sales by their parents or stepparents.

(4) "Employer" means any person, association, partnership, private or public corporation that employs or exercises control over the wages, hours, working conditions, or workplace of a minor, and for purposes of house-to-house sales includes any distributor or other person, association, partnership, private or public corporation that enters into any arrangement, including contract, whether implied, express, oral, or written, with a minor whereby the minor works in house-to-house sales; but does not include employers of agricultural labor as defined by RCW 50.04.150, employers of newspaper vendors or carriers, employers of casual labor in or about the employers' private residences, parents or stepparents employing their own minor children for house-to-house sales, the state, a state institution, a state agency, a political subdivision of the state, a municipal corporation, or a quasi-municipal corporation.

(5) "House-to-house sales" means a sale or other transaction in consumer goods, the demonstration of products or equipment, the obtaining of orders for consumer goods, or the obtaining of contracts for services, in which an employee personally solicits the sale or transaction at a place other than the place of business of the employer or the residence of the employee.

(6) "Minor" means a person under the age of eighteen years.

(7) "School holiday" means a day of a school week on which the school at which a minor employee is enrolled is scheduled to be closed. If a minor employee is not enrolled in school, school holidays shall be determined by the schedule of the public school district in which the minor resides.

(8) "School vacation" means the spring break, winter break, and summer break of the school at which a minor employee is enrolled, or if not enrolled the public school district in which a minor resides.

(9) "Transport" means the conveyance, provision of a means of conveyance, or reimbursement or payment for the cost of conveyance at the direction or under the control of an employer or an employer's agent.

(10) "Workplace" means any worksite, premises, or location where minors work.

[Statutory Authority: Chapters 43.22 and 49.12 RCW, RCW 26.28.060 and 43.17.060. 93-01-068, § 296-125-015, filed 12/11/92, effective 3/1/93. Statutory Authority: RCW 43.22.270 and 1989 c 216. 89-23-003, § 296-125-015, filed 11/3/89, effective 11/20/89; Order 76-15, § 296-125-015, filed 5/17/76; Order 74-9, § 296-125-015, filed 3/13/74, effective 4/15/74; Order 71-5, § 296-125-015, filed 5/26/71, effective 7/1/71; Section B, filed 9/18/63; Rules (part), filed 3/23/60.]

WAC 296-125-018 Minimum age for employment. (1) Pursuant to RCW 26.28.060, a written order issued by a judge of a superior court of the county in which a minor lives is a prerequisite to the hiring, not otherwise prohibited by federal law, of any minor under the age of fourteen for any labor in or in connection with any store, shop, factory, mine, or inside employment other than inside employment connected with farm or housework.

(2) No employer shall employ a minor under the age of sixteen in house-to-house sales, unless the department has granted a variance to an employer for that specific purpose.

[Statutory Authority: Chapters 43.22 and 49.12 RCW, RCW 26.28.060 and 43.17.060. 93-01-068, § 296-125-018, filed 12/11/92, effective 3/1/93.]

MASTER BUSINESS LICENSE/MINOR WORK PERMIT ENDORSEMENT

WAC 296-125-0200 If I plan to employ minors in my business, what general requirements do I have to satisfy? (1) You must obtain, keep current and post valid minor work permit endorsements issued by the department.

(2) If employing minors for house-to-house sales, you must satisfy the special requirements in WAC 296-125-024 for that activity.

(3) You must obtain and keep on file a completed parent/school authorization form for each minor you employ.

(4) You must keep on file any variances issued to you according to variance and/or special variance sections of this chapter.

(5) If you sponsor bona fide ***unpaid*** work-based learning programs approved by the office of the superintendent of public instruction or a local school district, you are not required to obtain minor work permit endorsements for those programs.

[Statutory Authority: RCW 49.12.121. 99-02-041, § 296-125-0200, filed 12/31/98, effective 1/31/99.]

WAC 296-125-0210 Do I need minor work permit endorsements for my business? If you plan to employ one or more minors, you must obtain, keep current and post valid minor work permit endorsements before you:

(1) Employ minors; or

(2) Allow minors to work at your workplace; or

(3) Allow minors to work under work conditions controlled by you.

[Statutory Authority: RCW 49.12.121. 99-02-041, § 296-125-0210, filed 12/31/98, effective 1/31/99.]

WAC 296-125-0211 What if I employ minors at several different workplaces? (1) You must obtain, keep current and post separate minor work permit endorsements for each workplace at which you employ minors.

(2) In those situations where you place minors in a workplace controlled by another employer, you and the other employer must obtain, keep current and post minor work permit endorsements at that workplace.

(3) When you employ minors in multiple workplaces, you must obtain, keep current and post minor work permit endorsements at each workplace.

(4) Unless modified or revoked, a single endorsement will allow you to employ any number of minors at the workplace specified on the endorsement.

[Statutory Authority: RCW 49.12.121. 99-02-041, § 296-125-0211, filed 12/31/98, effective 1/31/99.]

WAC 296-125-0220 Are there working condition restrictions which may be placed on my minor work permit endorsements? Minor work permit endorsements may include restrictions, consistent with this chapter, on minors' working conditions.

[Statutory Authority: RCW 49.12.121. 99-02-041, § 296-125-0220, filed 12/31/98, effective 1/31/99.]

WAC 296-125-0221 Do my minor work permit endorsements expire? Your minor work permit endorsements will expire one year from the date of issue.

[Statutory Authority: RCW 49.12.121. 99-02-041, § 296-125-0221, filed 12/31/98, effective 1/31/99.]

WAC 296-125-0222 Can I renew my minor work permit endorsements? You may renew your minor work permit endorsements. However, filing an application for renewal does not automatically result in an extension of your endorsement. The department may refuse to renew your endorsement if you have:

(1) Failed to satisfy a condition related to the initial issuance of the endorsement; or

(2) Violated the requirements of this chapter; or

(3) Any other condition that the department finds is or could be detrimental to the health, safety, or welfare of minors.

[Statutory Authority: RCW 49.12.121. 99-02-041, § 296-125-0222, filed 12/31/98, effective 1/31/99.]

WAC 296-125-0223 How long must my minor work permit endorsements stay in force? Unless revoked, suspended or modified by the department, your minor work permit endorsements must remain in full force and effect as long as:

(1) You employ minors; or

(2) Have minors working at your workplace; or

(3) Have minors working under work conditions controlled by you.

[Statutory Authority: RCW 49.12.121. 99-02-041, § 296-125-0223, filed 12/31/98, effective 1/31/99.]

WAC 296-125-0224 Do I need to post my minor work permit endorsements? At least one copy of your minor work permit endorsements and a current copy of the poster required by WAC 296-126-080 must be posted in plain view of all employees at each workplace specified in each endorsement.

[Statutory Authority: RCW 49.12.121. 99-02-041, § 296-125-0224, filed 12/31/98, effective 1/31/99.]

WAC 296-125-0230 Can the department of labor and industries refuse to issue or renew, revoke, suspend or modify my minor work permit endorsements? The department may refuse to issue or renew, revoke, suspend, or modify your minor work permit endorsements if it finds:

(1) A condition related to their issuance has not been satisfied; or

(2) You have violated any requirements of this chapter; or

(3) An existing condition that is or could be detrimental to the health, safety, or welfare of a minor. In this case, the department may issue an order of immediate restraint revoking, suspending or modifying your endorsements. If you appeal the department's action, the order of immediate restraint will remain in force until your appeal is resolved.

[Statutory Authority: RCW 49.12.121. 99-02-041, § 296-125-0230, filed 12/31/98, effective 1/31/99.]

WAC 296-125-0231 Can I appeal the department's refusal to issue or renew, or to revoke, suspend or modify my minor work permit endorsements? You have the right to appeal such actions by the department. However, your appeal must be filed with the department in writing within thirty days of the department's action according to the procedures established by RCW 49.12.161 and 49.12.400. Your appeal ***will not*** set aside an order of immediate restraint issued by the department according to RCW 49.12.390.

[Statutory Authority: RCW 49.12.121. 99-02-041, § 296-125-0231, filed 12/31/98, effective 1/31/99.]

WAC 296-125-024 House-to-house sales. (1) Minimum age. No minor under the age of sixteen years may be employed in house-to-house sales, unless the department

grants a variance to an employer for that specific purpose. A variance must be obtained prior to an employer's employment of any minor under the age of sixteen.

(2) Registration certificates. Each employer of minors in house-to-house sales, or person seeking to advertise to employ a person in house-to-house sales with an advertisement specifically stating a minimum age requirement that is under the age of twenty-one, shall receive from the department, and shall maintain, a valid house-to-house sales registration certificate prior to employing a sixteen- or seventeen-year-old minor for house-to-house sales and prior to advertising for employment.

Employers also must obtain and maintain a valid minor work permit, pursuant to WAC 296-125-020, and parent/school authorization forms, pursuant to WAC 296-125-126, prior to employing minors for house-to-house sales. If an employer seeks to transport a minor out of the state of Washington for house-to-house sales, the employer must obtain and keep on file express written authorization from each minor's parent or legal guardian to transport each minor worker out of the state for house-to-house sales.

A valid registration certificate and a valid minor work permit must remain in full force and effect at all times that minors are employed by the employer. When duly issued by the department, and unless modified, suspended, or revoked, such a certificate will authorize the employer to employ any number of sixteen- or seventeen-year-old minors for house-to-house sales in accordance with the provisions of this chapter and in accordance with any limitations listed on the certificate.

(3) Adult supervision requirements.

(a) The employer shall ensure that there is one adult supervisor for every five minor employees employed in house-to-house sales during all work hours. A supervisor may not supervise more than one group of five minor employees.

(b) The employer shall ensure that each supervisor of minor employees is a responsible adult who is at least twenty-one years of age.

(c) The employer shall ensure that each supervisor has contact, personally or verbally, with each minor employee at least once every fifteen minutes. The contact with minor employees may be made by remote means such as telephone or walkie-talkie, but in any case shall be of such a nature as to provide assurance of the minor's health, safety, and welfare. The employer shall ensure that each supervisor is within one-half mile of each supervised minor employee during all working hours.

(d) The employer shall ensure that each minor employee is returned by the employer or its agent to the minor's home or initial point of contact promptly at the end of the minor's work hours. If the minor is returned to the initial point of contact, the employer shall ensure that the location selected is one in which the minor's safety is the first and foremost consideration. Minors shall be protected from risks of injury including, but not limited to, moving vehicles.

(4) Hours restrictions and rest periods. Minors may not be employed in house-to-house sales prior to 7:00 a.m. or after 9:00 p.m., nor during school hours. In addition, employers of minors in house-to-house sales must comply with the further requirements of WAC 296-125-027, concerning maximum number of hours per day and per week, and WAC 296-125-028, concerning mandatory rest and meal breaks.

(5) Employee identification cards.

(a) An employer shall issue to each minor employed in house-to-house sales an identification card with the employee's picture. The identification cards issued shall be exclusively from forms obtained in blank from the department.

(b) An identification card shall be in the possession of each minor employed in house-to-house sales during all working hours, and shall be shown to each customer or potential customer.

(6) Posting. At least one copy of a valid house-to-house sales registration certificate shall be posted in plain view of all employees at the employer's primary place of business within the state of Washington.

(7) Renewal. House-to-house sales registration certificates shall be valid for a one-year period. The filing of an application for renewal of registration does not result in an automatic extension of the one-year registration period. The department may refuse to renew a registration certificate if the department finds that a condition of the previous registration period has not been satisfied, that the employer has violated the requirements of this chapter, or that any other condition exists that is or could be detrimental to the health, safety, or welfare of a minor.

(8) Revocation, suspension, and modification. The department may revoke, suspend, or modify an employer's registration for house-to-house sales if the department finds that a condition of registration is not being satisfied, that the employer has violated the requirements of this chapter, or that any other condition exists which is or could be detrimental to the health, safety, or welfare of a minor. In the event the department finds that a condition exists which is or could be detrimental to the health, safety, or welfare of a minor, the department may take emergency action to revoke or suspend a house-to-house sales registration; in such instances, an appeal of the department's action shall not stay the revocation, suspension, or modification during the pendency of the appeal.

(9) Appeals. An appeal of an action by the department to refuse to issue or renew, or to revoke, suspend, or modify an employer's house-to-house sales registration must be filed in writing with the director of the department within thirty days of the department's action. Such appeal shall be conducted in accordance with the rules of practice and procedure established in chapter 296-10 WAC. Such appeal shall not stay the effectiveness of an emergency action taken by the department pursuant to this section.

[Statutory Authority: Chapters 43.22 and 49.12 RCW, RCW 26.28.060 and 43.17.060. 93-01-068, § 296-125-024, filed 12/11/92, effective 3/1/93.]

PARENT/SCHOOL AUTHORIZATION FORMS

WAC 296-125-0260 If I employ minors, do I need authorization from the parent or school? Before allowing a minor to begin work, you must obtain and keep on file, at the minor's workplace, a fully completed parent/school authorization form. As the employer, it is your responsibility to ensure that the parent/school authorization form is complete.

[Statutory Authority: RCW 49.12.121. 99-02-041, § 296-125-0260, filed 12/31/98, effective 1/31/99.]

WAC 296-125-0261 Where can I obtain a parent/school authorization form? Parent/school authorization forms are issued only to employers with a valid minor work permit endorsement and can be obtained by contacting the local labor and industries office or:

Department of Labor and Industries
Employment Standards Section
PO Box 44510
Olympia WA 98504-4510

[Statutory Authority: RCW 49.12.121. 99-02-041, § 296-125-0261, filed 12/31/98, effective 1/31/99.]

WAC 296-125-0262 Do parent/school authorization forms expire? All parent/school authorization forms expire each year on the thirtieth day of September. ***Therefore, each year, prior to September 30, you must:***

(1) Obtain a new form for each of your minors; and

(2) Make sure it is properly completed; and

(3) File it where the minor works.

[Statutory Authority: RCW 49.12.121. 99-02-041, § 296-125-0262, filed 12/31/98, effective 1/31/99.]

WAC 296-125-0263 What information must a minor provide on the parent/school authorization form? A minor must provide the following personal information:

(1) Name.

(2) Address.

(3) Date of birth*.

(4) Whether he or she is employed at any other job(s) and the total number of hours worked at that job(s).

(5) His or her signature.

*Note: The date of birth must be supported by proof. Acceptable forms of proof are:

- ❑ A birth certificate and a social security card; or
- ❑ A driver's license; or
- ❑ A baptismal record and a Social Security card; or
- ❑ A notarized statement of a parent or guardian.

[Statutory Authority: RCW 49.12.121. 99-02-041, § 296-125-0263, filed 12/31/98, effective 1/31/99.]

WAC 296-125-0264 What information must an employer provide on the parent/school authorization form? As the employer, you must provide the following information:

(1) The location of the minor's workplace(s).

(2) A description of the minor's duties.

(3) The earliest and latest hours the minor would be working.

(4) The total number of hours the minor would work per week.

(5) Your minor work permit endorsement number and expiration date.

(6) Your unified business identifier (UBI) number.

(7) Your signature or the signature of your authorized agent.

[Statutory Authority: RCW 49.12.121. 99-02-041, § 296-125-0264, filed 12/31/98, effective 1/31/99.]

WAC 296-125-0265 What information must a parent or legal guardian provide on the parent/school authorization form? A parent or legal guardian of a minor must:

(1) Indicate that he or she authorizes (or does not authorize) the minor to work according to the terms listed by the employer.

(2) Sign the form.

[Statutory Authority: RCW 49.12.121. 99-02-041, § 296-125-0265, filed 12/31/98, effective 1/31/99.]

WAC 296-125-0266 What information must a school provide on the parent/school authorization form? (1) If a minor will be working during the school year, an authorized school official from the minor's school must:

(a) Indicate that the school authorizes (or does not authorize) the minor working according to the terms listed by the employer; and

(b) Sign the form as the school's authorized agent.

(2) Furthermore, if a minor begins work during a school vacation and wishes to continue working after school resumes, the employer must obtain school approval before the minor can continue. School approval must be based upon:

(a) Maintaining an acceptable level of scholastic achievement; and

(b) Maintaining good school attendance; and

(c) Making satisfactory progress toward graduation.

[Statutory Authority: RCW 49.12.121. 99-02-041, § 296-125-0266, filed 12/31/98, effective 1/31/99.]

WAC 296-125-0267 What if a minor is no longer attending school? (1) A parent or guardian must certify a minor's nonenrolled status if the minor is:

(a) Unmarried and living with a parent or legal guardian; and

(b) No longer enrolled in school; and

(c) Has not obtained a certificate of educational competence according to RCW 28A.305.190 or is not enrolled in a bona fide college program.

(2) If a minor is named on a valid marriage certificate or is living independently of a parent or legal guardian, the minor must:

(a) Certify that he or she is either married or living independently of a parent or guardian; and

(b) Certify his or her nonenrolled status; and

(c) Provide the name and location of the last school attended; and

(d) Provide the name and address or telephone number of an adult emergency contact other than the minor's employer. This contact person must certify that the minor is living independently of a parent or legal guardian.

[Statutory Authority: RCW 49.12.121. 99-02-041, § 296-125-0267, filed 12/31/98, effective 1/31/99.]

WAC 296-125-0268 Can a parent, legal guardian or school revoke the work authorization previously given on the parent/school authorization form? A parent, legal guardian, or school may revoke authorization at any time by simply notifying the department and the other parties to the authorization.

[Statutory Authority: RCW 49.12.121. 99-02-041, § 296-125-0268, filed 12/31/98, effective 1/31/99.]

WAC 296-125-027 Hours of work for minors. Employers shall restrict the hours of minors' employment as follows:

(1) During the school year:

(a) Minors may work the following total of hours:

(i) Minors under the age of sixteen:

(A) Maximum of three hours per day on any school day preceding another school day or otherwise a maximum of eight hours per day;

(B) Maximum of six days per week; and

(C) Maximum of sixteen hours per week;

(D) Except that no minors of this age shall work in house-to-house sales without a variance issued by the department pursuant to WAC 296-125-060(7).

(ii) Sixteen- and seventeen-year-old minors:

(A) Maximum of four hours per day on any school day preceding another school day or otherwise a maximum of eight hours per day;

(B) Maximum of six days per week; and

(C) Maximum of twenty hours per week.

(b) Minors shall work during the following hours only:

(i) Minors under the age of sixteen:

(A) No earlier than 7:00 a.m.;

(B) No later than 7:00 p.m. on any day preceding a school day;

(C) No later than 9:00 p.m. on Fridays, Saturdays, and the day preceding a school holiday or vacation, provided that minors employed past 8:00 p.m. in service occupations shall be supervised by a responsible adult employee who is on the premises at all times; and

(D) Not during school hours;

(E) Except that minors of this age shall not be employed in house-to-house sales without a variance issued by the department pursuant to WAC 296-125-060(7).

(ii) Sixteen- and seventeen-year-old minors:

(A) No earlier than 7:00 a.m.;

(B) No later than 10:00 p.m. on any day preceding a school day;

(C) No later than 12:00 a.m. on Fridays, Saturdays, and the day preceding a school holiday or vacation, provided that minors employed past 8:00 p.m. in service occupations shall be supervised by a responsible adult employee who is on the premises at all times; and

(D) Not during school hours, unless the minor has been excused from school attendance by the minor's school district superintendent or her or his authorized agent.

(2) During school vacations:

(a) Minors may work the following total of hours:

(i) Minors under the age of sixteen:

(A) Maximum of eight hours per day;

(B) Maximum of six days per week; and

(C) Maximum of forty hours per week;

(D) Except that no minors of this age shall work in house-to-house sales without a variance issued by the department pursuant to WAC 296-125-060(7).

(ii) Sixteen- and seventeen-year-old minors:

(A) Maximum of eight hours per day;

(B) Maximum of six days per week; and

(C) Maximum of forty-eight hours per week.

(b) Minors shall work during the following hours only:

(i) Minors under the age of sixteen:

(A) No earlier than 7:00 a.m.; and

(B) No later than 9:00 p.m. provided that minors employed past 8:00 p.m. in service occupations shall be supervised by a responsible adult employee who is on the premises at all times.

(ii) Sixteen- and seventeen-year-old minors:

(A) No earlier than 5:00 a.m.; and

(B) No later than 12:00 a.m. provided that minors employed past 8:00 p.m. in service occupations shall be supervised by a responsible adult employee who is on the premises at all times, and except no later than 9:00 p.m. for minors employed in house-to-house sales.

(3) Sixteen- and seventeen-year-old minors who have been issued a certificate of educational competence pursuant to RCW 28A.305.190, are enrolled in a bona fide college program, are named on a valid certificate of marriage, or are shown as the parent on a valid certificate of birth may work as would be permitted during school vacations.

[Statutory Authority: Chapters 43.22 and 49.12 RCW, RCW 26.28.060 and 43.17.060 and chapters 49.12 and 43.22 RCW and RCW 43.17.060. 93-01-068 and 93-01-116, § 296-125-027, filed 12/11/92 and 12/21/92, effective 7/1/93; Order 76-15, § 296-125-027, filed 5/17/76.]

RECORDKEEPING

WAC 296-125-0275 When I employ minors, what recordkeeping requirements must I satisfy? (1) You must create and maintain a file for each minor.

(2) The file must be maintained for three years from the last date of the minor's employment.

(3) The file must contain the following:

(a) A copy of the completed parent/school authorization form with any attachments; and

(b) Copies of any variances you obtained according the requirements of this chapter.

(4) These records must be kept safe and accessible at the place of employment or at a central recordkeeping office where such records are customarily maintained.

[Statutory Authority: RCW 49.12.121. 99-02-041, § 296-125-0275, filed 12/31/98, effective 1/31/99.]

WAC 296-125-0280 What is the department's enforcement authority? To enforce the requirements of this chapter, the director or the director's authorized representatives can, without delay:

(1) Enter any workplace where work is or has been performed by a minor, or where employment records are, or are required to be maintained; and

(2) Inspect, transcribe, and copy all pertinent records; and

(3) Inspect and investigate any workplace and all pertinent conditions, structures, machines, apparatus, devices, equipment, supplies, and materials located there; and

(4) Question privately any employer, owner, operator, agent, or employee.

[Statutory Authority: RCW 49.12.121. 99-02-041, § 296-125-0280, filed 12/31/98, effective 1/31/99.]

MEAL AND REST BREAKS FOR MINORS

WAC 296-125-0285 What regulations apply to meal and rest breaks for my fourteen-year-old and fifteen-year-old minors? (1) Since the purpose of meal periods and rest breaks is to provide rest from work, they must not be scheduled near the beginning of the work shift.

(2) The following specific regulations apply to your minors who are ***fourteen-years-old and fifteen-years-old*:**

(a) They must not work more than four hours without being given a meal period. This meal period must be at least thirty minutes in length and be separate and distinct from, and in addition to, the rest breaks mandated by this subsection.

(b) They must be given, on your business's time, a rest break of at least ten minutes for every two hours worked.

(c) When they work four-hour periods, they cannot be required to work more than two hours without being given either a ten-minute rest break or a thirty-minute meal period.

[Statutory Authority: RCW 49.12.121. 99-02-041, § 296-125-0285, filed 12/31/98, effective 1/31/99.]

WAC 296-125-0287 What regulations apply to meal and rest breaks for my sixteen-year-old and seventeen-year-old employees? (1) The following regulations apply to ***meal periods*** for your minors who are ***sixteen-years-old and seventeen-years-old*:**

(a) They must be allowed meal periods of at least thirty minutes in length.

(b) Their meal periods must start no less than two hours but no more than five hours from the beginning of their work shift.

(c) They must not be required to work more than five consecutive hours without a meal period.

(2) The following regulations apply to ***rest periods*** for your minors who are ***sixteen-years-old and seventeen-years-old*:**

(a) They must be allowed a rest period of not less than ten minutes, on your time, for each four hours worked.

(b) Their rest periods must be scheduled as near as possible to the midpoint of the work period.

(c) They must receive a rest period at least every three hours.

[Statutory Authority: RCW 49.12.121. 99-02-041, § 296-125-0287, filed 12/31/98, effective 1/31/99.]

WAC 296-125-030 Prohibited and hazardous employment—All minors. The following employments and occupations as outlined in subsections (1) through (30) of this section, are prohibited for all minors, provided that exemption will be allowed from subsections (5), (8), (9), (11), (13), (15), (16), and (23) of this section when the minor is participating in a bona fide cooperative vocational education program, diversified career experience program, or work experience program certified and monitored by the office of the superintendent of public instruction or the minor employee's school district; further, exemption from the same numbered prohibitions will be allowed for any minor involved in an apprenticeship program registered with the Washington state apprenticeship and training council. The state will not grant variances for employments or occupations prohibited by the United States Department of Labor.

(1) Occupations in or about plants or establishments manufacturing or storing explosives or articles containing explosive components.

(2) Occupations involving regular driving of motor vehicles. Occupations of outside helper or flagger on any public road or highway, work which involves directing moving motor vehicles in or around warehouses or loading/unloading areas including but not limited to loading docks, transfer stations, or landfills, or work which involves towing vehicles. Occasional driving is permissible if: The minor has a valid state driver's license for the type of driving involved; driving is restricted to daylight hours; such driving is only occasional, and is incidental to the minor's employment; vehicle gross weight is under 6,000 pounds; the minor has completed a state-approved driver education course; and seat belts are provided in the vehicle and the minor has been instructed to use them. Occupations involving occasional operation of a bus are prohibited.

(3) All mining occupations.

(4) Logging occupations and occupations in the operation of any sawmill, lath mill, shingle mill, or cooperage-stock mill.

(5) Occupations involving operation or repair, oiling, cleaning, adjusting, or setting up of any power-driven woodworking machines.

(6) Occupations involving potential exposure to radioactive substances and to ionizing radiation.

(7) Occupations involving operation or repair, oiling, cleaning, adjusting, or setting up of elevators. This includes riding on a manlift.

(8) Occupations involving operation or repair, oiling, cleaning, adjusting, or setting up of power-driven metal-forming, punching, and shearing machines.

(9) Occupations involving slaughtering, meat packing, processing, or rendering.

(10) Occupations involving operation or repair, oiling, cleaning, adjusting, or setting up of power-driven bakery machines.

(11) Occupations involving operation or repair, oiling, cleaning, adjusting, or setting up of power-driven paper-products machines.

(12) Occupations involving manufacturing of brick, tile, and kindred products.

(13) Occupations involving operation or repair, oiling, cleaning, adjusting, or setting up of power-driven circular saws, band saws, and guillotine shears.

(14) Occupations involving wrecking, demolition, and shipbreaking operations.

(15) All roofing operations.

(16) Occupations involving excavations.

(17) Occupations involving operation or repair, oiling, cleaning, adjusting, or setting up of or working in proximity to earth-moving machines, hoisting apparatus, cranes, garbage-compactors, trash-compactors or other compactors, paper-balers or other balers, or other heavy equipment including, but not limited to, graders, bulldozers, earth compactors, backhoes, and tractors. Working in proximity shall mean working within the radius of movement of any portion of the machinery where one could be struck or otherwise

injured. It shall not include work in proximity to ski-lift apparatus. This prohibition shall not invalidate activities allowed under subsection (2) of this section.

(18) Work in establishments or workplaces being picketed during the course of a labor dispute.

(19) Work as a nurse's aide/assistant; unless the minor is a student in a bona fide state-certified nursing training program or has successfully completed such a program.

(20) Work as a maid or bellhop in motels or hotels, unless the minor is accompanied by a responsible adult whenever the work requires the minor to enter an assigned guest room, whether or not it is occupied at the time the minor is in the room. Minors may work in unassigned, unoccupied guest rooms unaccompanied by an adult.

(21) Work in sauna or massage parlors, body painting or tattoo studios, or adult entertainment establishments.

(22) Occupations requiring the wearing of personal protective equipment or wearing apparel as defined and required by statutes or rules and regulations administered by the department's division of industrial safety and health as related to hazardous substances exposure and/or hazardous noise exposure per chapters 296-24 and 296-62 WAC; except those occupations where the only requirement is the wearing of gloves, boots, or eye protection if the occupation is not otherwise prohibited by this section or by WAC 296-125-033. This subsection's prohibitions shall not apply if a minor is a student in a bona fide health care career training or vocational education program.

(23) Occupations involving fire fighting and fire suppression duties.

(24) Occupations where there is a risk of exposure to bodily fluids or transmission of infectious agents, including but not limited to hepatitis and HIV, in accordance with standards established by WAC 296-62-08001 (Occupational exposure to blood-borne pathogens), including lab work which entails the cleaning of medical equipment used to draw or store blood or other contaminated tissue; duties which involve venipuncture; and duties involving work with laundry from health care facilities; unless the minor is a student in a bona fide health care career training or vocational education program. State-certified life guards with first-aid training are exempt.

(25) Occupations involving potential exposure to hazardous substances which are considered to be carcinogenic, corrosive, highly toxic, toxic sensitizers, or which have been determined to cause reproductive health effects or irreversible end organ damage. This does not include handling of such substances in sealed containers in retail situations. This subsection's prohibitions shall not apply to any consumer product or hazardous substance, as those terms are defined by the Consumer Product Safety Act (15 U.S.C. 2051 et seq.) and the Federal Hazardous Substances Act (15 U.S.C. 1261 et seq.) and those statutes' regulations, where the employer of a minor can demonstrate that a product or substance is used in the workplace in the same manner as normal consumer use, and which use results in a duration and frequency of exposure that is not greater than exposures experienced by consumers using the product or substance in conformity with the manufacturer's instructions, provided that such exposures are not otherwise prohibited by subsection (22) of this section.

(26) In selling to passing motorists on the public right of way candy, flowers, or other merchandise or commodities. Selling to motorists from a window counter is not prohibited.

(27) Work performed in or about boiler or engine rooms.

(28) All work performed more than ten feet above ground or floor level.

(29) Work in freezers, meat coolers, and all work in preparing meats for sale (wrapping, sealing, labeling, weighing, pricing, and stocking are permitted if work is performed away from meat-cutting and preparation areas). Occasional entry into freezers or coolers for obtaining stock or placing stock shall not be prohibited.

(30) Service occupations if a minor works past 8:00 p.m., unless the minor is supervised by a responsible adult employee who is on the premises at all times.

[Statutory Authority: Chapters 43.22 and 49.12 RCW, RCW 26.28.060 and 43.17.060. 93-01-068, § 296-125-030, filed 12/11/92, effective 3/1/93. Statutory Authority: RCW 43.22.270 and 1989 c 216. 89-23-003, § 296-125-030, filed 11/3/89, effective 11/20/89; Order 77-32, § 296-125-030, filed 12/30/77; Order 76-15, § 296-125-030, filed 5/17/76; Order 74-9, § 296-125-030, filed 3/13/74, effective 4/15/74; Order 71-5, § 296-125-030, filed 5/26/71, effective 7/1/71; Section E, filed 9/18/63; Rules (part), filed 3/23/60.]

WAC 296-125-033 Prohibited and hazardous employment—Special restrictions for minors under the age of 16. Employment of minors under age 16 is subject to the following additional restrictions. They are prohibited from working:

(1) In any manufacturing operations.

(2) In any processing operations (including but not limited to filleting of fish, dressing poultry, cracking nuts, commercial processing, canning, freezing or drying of foods, laundering as performed by commercial laundries and dry cleaning).

(3) In any public messenger service, including but not limited to work that is performed by foot, bicycle, or public transportation.

(4) In occupations connected with transportation, warehouse and storage, communications and public utilities, or construction. (Office work related to these occupations is permitted if none of the minor's work is performed on the transportation media or construction site.)

(5) In the following specific areas of retail, food service or gasoline service station operations:

(a) Maintenance or repair work.

(b) Window washing or other work requiring worker to be positioned at higher than ground or floor level.

(c) Cooking and baking.

(d) Operating, setting up, adjusting, cleaning, oiling or repairing power-driven food slicers and grinders, food choppers and cutters and bakery-type mixers.

(6) In occupations involving work in the operation of amusement parks, street carnivals, and traveling shows.

(7) Loading and unloading goods to or from trucks, railroad cars, or conveyors.

(8) In occupations involving operation or repair, oiling, cleaning, adjusting, or setting up of or working in proximity to any power-driven machinery.

[Statutory Authority: Chapters 43.22 and 49.12 RCW, RCW 26.28.060 and 43.17.060. 93-01-068, § 296-125-033, filed 12/11/92, effective 3/1/93; Order 76-15, § 296-125-033, filed 5/17/76.]

WAC 296-125-043 Minimum wages—Minors. Except where a higher minimum wage is required by Washington state or federal law:

(1) Every employer shall pay to each of his or her employees who have reached their sixteenth or seventeenth year of age a rate of pay per hour which is equal to the hourly rate required by RCW 49.46.020 for employees eighteen years of age or older, whether computed on an hourly, commission, piecework, or other basis, except as may be otherwise provided under this chapter.

(2) Every employer shall pay to each of his or her employees who have not reached their sixteenth year of age a rate of pay per hour that is not less than eighty-five percent of the hourly rate required by RCW 49.46.020 for employees eighteen years of age or older whether computed on an hourly, commission, piecework, or other basis, except as may be otherwise provided under this chapter.

(3) These provisions shall not apply to handicapped minors for whom special handicapped minor work permits have been issued as provided in RCW 49.12.110. The handicapped rate therein shall be set at a rate designed to adequately reflect the individual's earning capacity.

(4) These minimum wage provisions shall not apply when a minor student is in a work place to carry out an occupational training experience assignment directly supervised on the premises by a school official or an employer under contract with a school and when no appreciable benefit is rendered to the employer by the presence of the minor student.

[Statutory Authority: RCW 43.22.270 and 1988 c 236. 89-10-014 (Order 88-32), § 296-125-043, filed 4/24/89, effective 6/1/89; Order 76-15, § 296-125-043, filed 5/17/76.]

VARIANCES

WAC 296-125-0600 What is a variance? A variance is an exception to the rules of this chapter granted for good cause by the director of labor and industries or the director's designee.

[Statutory Authority: RCW 49.12.121. 99-02-041, § 296-125-0600, filed 12/31/98, effective 1/31/99.]

WAC 296-125-0610 How do I obtain a variance? You must submit a written application to the director requesting the variance(s). In your application you must specify the reasons why your request should be granted. If necessary, the director may request or receive additional information from you or other interested parties.

[Statutory Authority: RCW 49.12.121. 99-02-041, § 296-125-0610, filed 12/31/98, effective 1/31/99.]

WAC 296-125-0611 What does "good cause" mean? At a minimum, "good cause" refers to those situations and circumstances that support your request for a variance. You must be able to demonstrate that the variance will not be harmful to the health, safety, and welfare (including school attendance and performance) of the minor(s) affected. "Good cause" may also include the financial need of the minor's family or an exceptional or special talent manifested by the minor.

[Statutory Authority: RCW 49.12.121. 99-02-041, § 296-125-0611, filed 12/31/98, effective 1/31/99.]

WAC 296-125-0620 Are there special requirements that I must satisfy if I request a variance to employ minors under the age of sixteen in house-to-house sales? If you are requesting a variance to employ minors under the age of sixteen in house-to-house sales, you must demonstrate good cause for the variance and file a signed sworn statement ensuring that the following minimum requirements will be in force at all times:

(1) All house-to-house sales will be conducted only during daylight hours; and

(2) A responsible adult who is at least twenty-one years of age will accompany the minor at all times; and

(3) No house-to-house sales visits will be conducted in inclement weather; and

(4) The minor will only be employed for a specific time period that cannot exceed six weeks.

[Statutory Authority: RCW 49.12.121. 99-02-041, § 296-125-0620, filed 12/31/98, effective 1/31/99.]

WAC 296-125-0640 What criteria will be used to evaluate my variance request? (1) The director or the director's designee may grant your variance request if you:

(a) Possess a valid minor work permit endorsement; and

(b) Demonstrate good cause.

(2) Variances will be granted, as applicable, based on good cause shown, for residential schools, apprenticeship programs registered with the Washington state apprenticeship and training council, and vocational education, diversified career education, work experience, and cooperative education programs accepted and certified by the office of superintendent of public instruction or the local school district for circumstances other than those already exempted in WAC 296-125-030.

(3) Variances from federal regulations will not be issued except where you can show exemption from federal statutes and regulations governing minor work.

[Statutory Authority: RCW 49.12.121. 99-02-041, § 296-125-0640, filed 12/31/98, effective 1/31/99.]

WAC 296-125-0650 Do my variances expire? Each of your variances will expire upon the expiration of the minor work permit endorsement that was in effect at the time the variance was issued unless the variance was issued with an earlier expiration date.

[Statutory Authority: RCW 49.12.121. 99-02-041, § 296-125-0650, filed 12/31/98, effective 1/31/99.]

WAC 296-125-0651 Can my variances be renewed? When you renew your minor work permit endorsements, you must also apply for new variances that are related to those endorsements.

[Statutory Authority: RCW 49.12.121. 99-02-041, § 296-125-0651, filed 12/31/98, effective 1/31/99.]

WAC 296-125-0660 Can the department of labor and industries revoke, suspend, or modify my variances? The department may revoke, suspend, or modify your variances if it finds:

(1) A condition related to its issuance has not been satisfied; or

(2) You have violated any requirement of this chapter; or

(3) An existing condition that is or could be detrimental to the health, safety, or welfare of a minor including an adverse impact upon their school attendance or performance.

[Statutory Authority: RCW 49.12.121. 99-02-041, § 296-125-0660, filed 12/31/98, effective 1/31/99.]

WAC 296-125-0670 Can I appeal the department's action to revoke, suspend or modify my variances? You have the right to appeal a department action to revoke, suspend or modify your variances. However, your appeal must be filed with the department in writing within thirty days of the department's action according to the procedures established by RCW 49.12.161 and 49.12.400. Your appeal ***will not*** set aside an order of immediate restraint issued by the department according to RCW 49.12.390.

[Statutory Authority: RCW 49.12.121. 99-02-041, § 296-125-0670, filed 12/31/98, effective 1/31/99.]

SPECIAL VARIANCES

WAC 296-125-0700 What is a special variance? (1) A special variance is an exception to specific rules of this chapter. Special variances are granted by a designated school official of a school district or individual private school which has department approval to participate in the special variance process described in WAC 296-125-0720.

(2) A special variance is used to facilitate flexibility in a sixteen-year-old or seventeen-year-old minor's school and work requirements and may be granted ***only*** for exceptions to the rules governing:

(a) The maximum hours of work per week during a week when school is in session, up to a maximum of twenty-eight hours per week; and

(b) The maximum hours of work per day during a week when school is in session, up to a maximum of six hours per day.

(3) Special variances will not be granted for sixteen-year-old and seventeen-year-old minors working in house-to-house sales.

(4) When school is in session, minors must not work in excess of the maximum hours per week or per day illustrated in the following chart unless the employer has a current, fully completed and executed special variance on file at the minor's workplace.

Hours of work--Nonagriculture

	14-year-olds and 15-year-olds		16-year-olds and 17-year-olds	
	School	Nonschool	School	Nonschool
Hours a day	3* (weekdays) 8 (Fri.-Sun.)	8	4** (weekdays) 8 (Fri.-Sun.)	8
Hours a week	16	40	20/28***	48
Days a week	6 days	6 days	6 days	6 days
Start	7 a.m.	7 a.m.	7 a.m.	5 a.m.
Quit	7 p.m. (weekdays)	9 p.m.	10 p.m. (Sun.-Thurs.) Midnight (Fri. & Sat.)	Midnight

* 14-year-olds and 15-year-olds can work up to 3 hours on a school day preceding a school day. All other days, 8 hours per day.

** 16-year-olds and 17-year-olds can work up to 4 hours on a school day preceding a school day. All other days, 8 hours per day.

*** Up to 28 hours available through special variances.

[Statutory Authority: RCW 49.12.121. 99-02-041, § 296-125-0700, filed 12/31/98, effective 1/31/99.]

WAC 296-125-0710 What criteria will be followed in evaluating my special variance request? The designated school official may grant your special variance request if you:

(1) Possess a valid minor work permit endorsement; and

(2) Demonstrate good cause; and

(3) Request the variance for a minor whose school district or individual private school has department approval to participate in the special variance process discussed in WAC 296-125-0720.

[Statutory Authority: RCW 49.12.121. 99-02-041, § 296-125-0710, filed 12/31/98, effective 1/31/99.]

WAC 296-125-0720 How can a school district or individual private school qualify for participation in the special variance process? Each school district or individual private school seeking to participate in the special variance process must:

(1) Complete an enrollment form provided by the department; and

(2) Be approved by the department; and

(3) Agree to maintain a mandatory recordkeeping system specified by the department; and

(4) Use the uniform criteria described in WAC 296-125-0750 to evaluate variance requests.

[Statutory Authority: RCW 49.12.121. 99-02-041, § 296-125-0720, filed 12/31/98, effective 1/31/99.]

WAC 296-125-0721 Where can a school district or individual private school obtain a copy of the special vari-

ance process enrollment form? The form can be obtained from:

Department of Labor and Industries
Employment Standards Section
PO Box 44510
Olympia WA 98504-4510

[Statutory Authority: RCW 49.12.121. 99-02-041, § 296-125-0721, filed 12/31/98, effective 1/31/99.]

WAC 296-125-0722 In addition to completing the enrollment form, what other requirements must be satisfied before a school district or private school can participate in the special variance program? At a minimum, a school district or private school must agree to all of the following:

(1) Maintain the recordkeeping system required by the department.

(2) Designate a school official at each school who is authorized to evaluate and approve/disapprove variance requests.

(3) Use the uniform criteria discussed in WAC 296-125-0750 to evaluate variance requests.

(4) Within thirty days of the school's action, forward a copy of each variance approved or denied to the department.

(5) Give department agents immediate access to all variance files during normal school office hours.

(6) Be responsible for ensuring that the employer completes all appropriate sections of the special variance request form.

[Statutory Authority: RCW 49.12.121. 99-02-041, § 296-125-0722, filed 12/31/98, effective 1/31/99.]

WAC 296-125-0723 What is the employer's responsibility in providing information to the minor, the minor's parent or legal guardian, and school officials? (1) The employer must obtain a special variance form from the participating school and provide the following information:

(a) The minor's work-related duties;

(b) The maximum hours to be worked each week;

(c) The length of the minor's work shifts;

(d) The latest afternoon or evening hour that the minor will work;

(e) The number of days each week that the minor will be required to work the latest afternoon or evening hour;

(f) The employer's unified business identifier (UBI) number;

(g) The expiration dates of the employer's minor work permit endorsements.

(2) The employer must agree to maintain all special variance records according to the terms of WAC 296-125-0275.

(3) Upon completion, the employer must give the form to the minor to complete according to WAC 296-125-0730.

[Statutory Authority: RCW 49.12.121. 99-02-041, § 296-125-0723, filed 12/31/98, effective 1/31/99.]

WAC 296-125-0730 What other information about special variance requests is important? (1) To be valid, a special variance request form must be completed and signed by the employer, the minor, the minor's authorized school official and the minor's parent or legal guardian.

(2) The special variance, unless revoked, suspended or modified, shall remain in force for the duration of the school year for which it was granted. While the special variance is in force, it is the school district's responsibility to monitor it to insure that the conditions under which it was granted are being met.

(3) All minors must complete their section of the variance form ***after*** the employer section has been completed but ***before*** the form is submitted to the school, parent, or legal guardian.

(4) All minors must explain why they are requesting a special variance.

(5) The minor's parent or guardian must sign the request form. By signing, the parent or guardian approves or denies the request and attests to the reasons supporting it.

[Statutory Authority: RCW 49.12.121. 99-02-041, § 296-125-0730, filed 12/31/98, effective 1/31/99.]

WAC 296-125-0740 What are the consequences of submitting an incomplete special variance request form? (1) An incomplete special variance request form submitted to the department is:

(a) Invalid; and

(b) A violation of this chapter; and

(c) Cause for a school district, an individual private school or an employer to be dropped from the special variance program.

(2) When the department receives an incomplete special variance request form, it must give written notification to the school district or private school that its enrollment in the special variance program is being revoked.

[Statutory Authority: RCW 49.12.121. 99-02-041, § 296-125-0740, filed 12/31/98, effective 1/31/99.]

WAC 296-125-0741 Can a school district or private school appeal the department's decision to revoke its participation in the special variance program? A school district or private school may appeal a notice of revocation; however, the appeal must be filed with the department in writing within thirty days of its receipt. The written appeal must be sent to the department according to the procedures established by RCW 49.12.161 and 49.12.400. Filing an appeal does not set aside a notice of revocation.

[Statutory Authority: RCW 49.12.121. 99-02-041, § 296-125-0741, filed 12/31/98, effective 1/31/99.]

WAC 296-125-0750 What are the criteria used by a school to evaluate special variance requests? In evaluating requests for special variances, a school must consider at least the following factors:

(1) Does the employer hold a current valid minor work permit endorsement?

(2) What is the student's attendance pattern?

(3) Is the student making satisfactory academic progress?

(4) Will the student still have opportunities to participate in extracurricular activities?

(5) How many school nights will the student work?

(6) How late in the evening will the student work?

(7) How long a shift will the student work?

(8) How sound is the student's rationale for requesting a variance from the work hour restrictions illustrated in the table in WAC 296-125-0700(4)?

[Statutory Authority: RCW 49.12.121. 99-02-041, § 296-125-0750, filed 12/31/98, effective 1/31/99.]

WAC 296-125-0760 Do special variances expire? (1) Since special variances will be issued only to employers holding valid minor work permit endorsements, each special variance expires on the expiration date of the endorsement that was in effect at the time the special variance was issued.

(2) Upon the renewal of a minor work permit endorsement, an employer must complete a new special variance request form.

[Statutory Authority: RCW 49.12.121. 99-02-041, § 296-125-0760, filed 12/31/98, effective 1/31/99.]

WAC 296-125-0770 Can the department of labor and industries revoke, suspend, or modify a special variance? (1) The department may revoke, suspend, or modify a special variance if it finds:

(a) A condition related to its issuance has not been satisfied; or

(b) A violation of any requirement of this chapter; or

(c) An existing condition that is or could be detrimental to the health, safety, or welfare of a minor.

(2) If an employer violates the hour standards in WAC 296-125-027 or the hours specified in any special variance, they will forfeit their participation in the special variance process for one year from the finding of the violation by the department.

[Statutory Authority: RCW 49.12.121. 99-02-041, § 296-125-0770, filed 12/31/98, effective 1/31/99.]

WAC 296-125-0771 Can the parties to a special variance revoke it? A parent, legal guardian, or school may revoke a special variance at any time by simply giving written notification to the department and the other parties to the variance.

[Statutory Authority: RCW 49.12.121. 99-02-041, § 296-125-0771, filed 12/31/98, effective 1/31/99.]

WAC 296-125-0772 Can the department's action to refuse to issue or renew, revoke, suspend or modify a special variance be appealed? The department's refusal to issue or renew participation in the special variance process can be appealed, as well as, its decision to revoke or suspend participation. However, the appeal must be filed with the department in writing within thirty days of the department's action according to the procedures established by RCW 49.12.161 and 49.12.400. The appeal ***will not*** set aside an order of immediate restraint issued by the department according to RCW 49.12.390.

[Statutory Authority: RCW 49.12.121. 99-02-041, § 296-125-0772, filed 12/31/98, effective 1/31/99.]

Chapter 296-126 WAC

STANDARDS OF LABOR FOR THE PROTECTION OF THE SAFETY, HEALTH AND WELFARE OF EMPLOYEES FOR ALL OCCUPATIONS SUBJECT TO CHAPTER 49.12 RCW

WAC

296-126-001	Applicability.
296-126-002	Definitions.
296-126-010	Minimum wages—Adults.
296-126-020	Minimum wages—Minors.
296-126-021	Minimum wages—Commissions and piecework.
296-126-022	Gratuities.
296-126-023	Payment interval.
296-126-025	Deductions.
296-126-040	Statements furnished.
296-126-050	Employment records.
296-126-060	Minor work permits.
296-126-070	Prohibited action.
296-126-080	Posting of order.
296-126-090	Hours.
296-126-092	Meal periods—Rest periods.
296-126-094	General duty—Working conditions.
296-126-096	Lifting.
296-126-130	Variance.
296-126-200	Applicability.
296-126-202	Definitions.
296-126-204	Minimum wage.
296-126-206	Limitation on number of employees paid in Counselor I and Counselor II rates.
296-126-208	Premium pay for resident counselor staff occupations.
296-126-210	Board, lodging, and other services.
296-126-212	Travel expenses.
296-126-214	Records.
296-126-216	Agreements.
296-126-218	Work permits.
296-126-220	Minors' occupations.
296-126-222	Sanitation and safety.
296-126-226	Penalties.

Reviser's note: For industrial welfare committee appeal procedures, see also chapter 296-129 WAC.

DISPOSITION OF SECTIONS FORMERLY CODIFIED IN THIS CHAPTER

296-126-098	Wearing apparel. [Statutory Authority: RCW 49.12.091 (as amended by RCW 43.22.282). 97-01-124, § 296-126-098, filed 12/19/96, effective 1/19/97; Order 76-15, § 296-126-098, filed 5/17/76.] Repealed by 98-14-041, filed 6/24/98, effective 7/25/98. Statutory Authority: RCW 49.12.091 and 1998 c 334.
296-126-140	Appeal procedures. [Order 74-9, § 296-126-140, filed 3/13/74, effective 4/15/74.] Repealed by 97-17-064, filed 8/18/97, effective 9/18/97.
296-126-224	Wearing apparel. [Statutory Authority: RCW 49.12.091. 78-03-004 (Order 78-1), § 296-126-224, filed 2/3/78.] Repealed by 97-01-124, filed 12/19/96, effective 1/19/97. Statutory Authority: RCW 49.12.091 (as amended by RCW 43.22.282).

WAC 296-126-001 Applicability. These standards, adopted pursuant to the authority of chapter 49.12 RCW as amended by chapter 16, Laws of 1973 2nd ex. sess., shall apply to any person employed in any industry or occupation within the state of Washington, unless:

(1) Exempted by the provisions of chapter 49.12 RCW (newspaper vendors or carriers, domestic or casual labor in or about private residences, agricultural labor as defined in RCW 50.04.150, as now or hereafter amended, and sheltered workshops, are all exempt from these provisions);

(2) Otherwise exempted in rules and regulations adopted by the industrial welfare committee of the state of Washington;

(3) Exempted by a variance issued under the provisions in WAC 296-126-130;

(4) Such person is an employee of the state or any political subdivision, or municipal corporation to the extent that these rules conflict with any statute, rule or regulation adopted under the authority of the appropriate legislative body.

[Order 74-9, § 296-126-001, filed 3/13/74, effective 4/15/74.]

WAC 296-126-002 Definitions. (1) "Employer" means any person, firm, corporation, partnership, business trust, legal representative, or other business entity which engages in any business, industry, profession, or activity in this state and employs one or more employees, unless exempted by chapter 49.12 RCW or these rules.

(2) "Employee" means an employee who is employed in the business of his employer whether by way of manual labor or otherwise. This definition is not intended, for purposes of these regulations, to include: Any individual registered as a volunteer with a state or federal volunteer program or any person who performs any assigned or authorized duties for an educational, religious, governmental or nonprofit charitable corporation by choice and receives no payment other than reimbursement for actual expenses necessarily incurred in order to perform such volunteer services; any individual employed in a bona fide executive, administrative or professional capacity or in the capacity of commissioned outside salesperson; nor is it intended to include independent contractors where said individuals control the manner of doing the work and the means by which the result is to be accomplished.

(3) "Employ" means to engage, suffer or permit to work.

(4) "Adult" means any person of either sex, eighteen years of age or older.

(5) "Minor" means any person of either sex under eighteen years of age.

(6) "Student learner" means a person enrolled in a bona fide vocational training program accredited by a national or regional accrediting agency recognized by the United States Office of Education, or authorized and approved by the Washington state commission for vocational education, who may be employed part time in a definitely organized plan of instruction.

(7) "Learner" means a worker whose total experience in an authorized learner occupation is less than the period of time allowed as a learning period for that occupation in a learner certificate issued by the director pursuant to regulations of the department of labor and industries.

(8) "Hours worked" shall be considered to mean all hours during which the employee is authorized or required by the employer to be on duty on the employer's premises or at a prescribed work place.

(9) "Conditions of labor" shall mean and include the conditions of rest and meal periods for employees including provisions for personal privacy, practices, methods and means by or through which labor or services are performed by employees and includes bona fide physical qualifications in employment, but shall not include conditions of labor otherwise governed by statutes and rules and regulations relating to industrial safety and health administered by the department.

(10) "Committee" shall mean the industrial welfare committee as provided by law. The committee's secretary is the supervisor of employment standards in care of the Department of Labor and Industries, General Administration Building, Olympia, Washington 98504.

[Order 76-15, § 296-126-002, filed 5/17/76; Order 74-9, § 296-126-002, filed 3/13/74, effective 4/15/74.]

WAC 296-126-010 Minimum wages—Adults. Except where a higher minimum wage is required by Washington state or federal law, (1) every employer shall pay to each of his or her adult employees wages at a rate of not less than one dollar and eighty cents per hour, and effective January 1, 1975, not less than two dollars per hour, whether computed on an hourly commission, piecework or other basis, except as may be otherwise provided by law or regulation.

(2) These provisions shall not apply to outside commissioned salespersons; or to trainees, learners, student learners, apprentices or handicapped persons for whom special certificates or special permits have been issued as set forth in RCW 49.12.110. These special rates shall be computed as follows: Learners — 85% of the applicable minimum wage; student-learner — 75% of the applicable minimum rate; handicapped — at a rate designed to reflect adequately the individual's earning capacity.

[Order 74-9, § 296-126-010, filed 3/13/74, effective 4/15/74.]

WAC 296-126-020 Minimum wages—Minors. Except where a higher minimum wage is required by Washington state or federal law:

(1) Every employer shall pay to each of his or her employees who have reached their sixteenth or seventeenth year of age a rate of pay per hour which is equal to the hourly rate required by RCW 49.46.020 for employees eighteen years of age or older, whether computed on an hourly, commission, piecework, or other basis, except as may be otherwise provided under this chapter.

(2) Every employer shall pay to each of his or her employees who have not reached their sixteenth year of age a rate of pay per hour that is not less than eighty-five percent of the hourly rate required by RCW 49.46.020 for employees eighteen years of age or older whether computed on an hourly, commission, piecework, or other basis, except as may be otherwise provided under this chapter.

(3) These provisions shall not apply to handicapped minors for whom special handicapped minor work permits have been issued as provided in RCW 49.12.110. The handicapped rate therein shall be set at a rate designed to adequately reflect the individual's earning capacity.

[Statutory Authority: RCW 43.22.270 and 1988 c 236. 89-10-014 (Order 88-32), § 296-126-020, filed 4/24/89, effective 6/1/89; Order 74-9, § 296-126-020, filed 3/13/74, effective 4/15/74.]

WAC 296-126-021 Minimum wages—Commissions and piecework. Where employees are paid on a commission or piecework basis, wholly or partially, (1) the amount earned on such basis in each work-week period may be credited as a part of the total wage for that period; and

(2) The total wages paid for such period shall be computed on the hours worked in that period resulting in no less than the applicable minimum wage rate.

[Order 74-9, § 296-126-021, filed 3/13/74, effective 4/15/74.]

WAC 296-126-022 Gratuities. For the purposes of these regulations, gratuities received by employees shall not be considered a part of the minimum wage.

[Order 74-9, § 296-126-022, filed 3/13/74, effective 4/15/74.]

WAC 296-126-023 Payment interval. All wages due shall be paid at no longer than monthly intervals to each employee on established regular pay days. To facilitate bookkeeping, an employer may implement a regular payroll system in which wages from up to seven days before pay day may be withheld from the pay period covered and included in the next pay period.

[Statutory Authority: RCW 43.22.270, 49.12.020, 49.12.091, 49.12.050, 49.46.020 and 49.46.070. 89-22-016 (Order 89-16), § 296-126-023, filed 10/24/89, effective 11/24/89; Order 74-9, § 296-126-023, filed 3/13/74, effective 4/15/74.]

WAC 296-126-025 Deductions. Except as otherwise provided by law, no employer shall make any deduction from the wage of an employee:

(1) For any cash shortage, walkout (failure of customer to pay), breakage, or loss of equipment, unless it can be shown that the shortage, walkout, breakage or loss was caused by a dishonest or willful act of the employee.

(2) For acceptance of a bad check, unless it can be shown that the employee accepted such a check in violation of procedures previously made known to him or her by the employer.

(3) For any cash shortage from a cash register, drawer or portable depository provided for that purpose, unless the employee has sole access to the cash and has participated in the cash accounting at the beginning of his or her shift and again at the end of said shift. Where a portable cash depository is in use the employer shall provide for periodic withdrawals of cash receipts during the shift to prevent large accumulations of cash.

[Order 74-9, § 296-126-025, filed 3/13/74, effective 4/15/74.]

WAC 296-126-040 Statements furnished. Every employer shall furnish to each employee at the time of payment of wages an itemized statement showing the pay basis (i.e., hours or days worked), rate or rates of pay, gross wages and all deductions therefrom for that pay period.

[Order 74-9, § 296-126-040, filed 3/13/74, effective 4/15/74.]

WAC 296-126-050 Employment records. (1) Every employer shall keep for at least three years a record of the name, address, and occupation of each employee, dates of employment, rate or rates of pay, amount paid each pay period to each such employee and the hours worked.

(2) Every employer shall make the record described in subsection (1) available to the employee, upon request, at any reasonable time.

(3) Every employer shall, upon written request by the employee, furnish within ten working days of the request to each employee who is discharged a signed written statement, setting forth the reasons for such discharge and the effective date thereof.

[Statutory Authority: RCW 43.22.270, 49.12.020, 49.12.091, 49.12.050, 49.46.020 and 49.46.070. 89-22-016 (Order 89-16), § 296-126-050, filed 10/24/89, effective 11/24/89; Order 74-9, § 296-126-050, filed 3/13/74, effective 4/15/74.]

WAC 296-126-060 Minor work permits. No minor shall be employed in any occupation or industry unless the employer shall have on file during the period of employment an unexpired work permit issued pursuant to section 15, chapter 16, Laws of 1973 2nd ex. sess., and regulations implementing said section in chapter 296-125 WAC. Such permit will not be issued except upon presentation of such evidence of age as is required by the industrial welfare committee.

[Order 74-9, § 296-126-060, filed 3/13/74, effective 4/15/74.]

WAC 296-126-070 Prohibited action. No employer shall discharge or in any other way discriminate against or penalize any employee who seeks information or a hearing concerning variance requests by an employer or information concerning employment standards, or who has filed a complaint alleging a violation of any employment standard.

[Order 74-9, § 296-126-070, filed 3/13/74, effective 4/15/74.]

WAC 296-126-080 Posting of order. The employer shall keep posted a current copy of these regulations in a form provided by the department. The poster shall be positioned in a readily accessible location and within plain view in each work site where an employee or employees are employed.

[Order 74-9, § 296-126-080, filed 3/13/74, effective 4/15/74.]

WAC 296-126-090 Hours. Any employee who feels the number of hours or other matters relating to overtime employment are detrimental to the health, safety or welfare of the employee may request the department of labor and industries to make an investigation following which the department will issue findings and conclusions. Whenever the circumstances are found to be detrimental to the health, safety or welfare of the employee, the industrial welfare committee may adopt additional or revised employment standards.

[Order 76-15, § 296-126-090, filed 5/17/76.]

WAC 296-126-092 Meal periods—Rest periods. (1) Employees shall be allowed a meal period of at least 30 minutes which commences no less than two hours nor more than five hours from the beginning of the shift. Meal periods shall be on the employer's time when the employee is required by the employer to remain on duty on the premises or at a prescribed work site in the interest of the employer.

(2) No employee shall be required to work more than five consecutive hours without a meal period.

(3) Employees working three or more hours longer than a normal work day shall be allowed at least one 30-minute meal period prior to or during the overtime period.

(4) Employees shall be allowed a rest period of not less than 10 minutes, on the employer's time, for each 4 hours of working time. Rest periods shall be scheduled as near as pos-

sible to the midpoint of the work period. No employee shall be required to work more than three hours without a rest period.

(5) Where the nature of the work allows employees to take intermittent rest periods equivalent to 10 minutes for each 4 hours worked, scheduled rest periods are not required.

[Order 76-15, § 296-126-092, filed 5/17/76.]

WAC 296-126-094 General duty—Working conditions. It shall be the responsibility of every employer to maintain conditions within the work place environment that will not endanger the health, safety or welfare of employees. All facilities, equipment, practices, methods, operations and procedures shall be reasonably adequate to protect employees' health, safety and welfare.

[Order 76-15, § 296-126-094, filed 5/17/76.]

WAC 296-126-096 Lifting. Where weights in excess of 20 pounds are to be lifted, carried, pushed or pulled as a normal part of an employee's responsibility:

(1) The lifting, carrying, pushing or pulling duties shall be made known to the prospective employee at the time of recruitment, initial employment or reassignment to a lifting job.

(2) Instruction shall be given such employees on proper lifting techniques in accordance with instructions provided or approved by the department of labor and industries.

(3) Assurance that adequate instructions in weight lifting techniques have been given as provided in (2) shall be furnished the committee or its authorized agent upon request.

[Order 76-15, § 296-126-096, filed 5/17/76.]

WAC 296-126-130 Variance. (1) Upon written application from an employer, a variance from any standard herein may be granted by the industrial welfare committee for good cause shown as authorized by section 8, chapter 16, Laws of 1973 2nd ex. sess. The employer shall give notice to the employees or their representative so that they may submit their written views to the committee on any variance request.

(2) The committee may afford the applicant and any involved employee, or their representatives, the opportunity for oral presentation whenever circumstances of the particular application warrant such additional procedure.

(3) Temporary variance valid for not more than thirty calendar days may be issued by the committee for good cause where immediate action is necessary and warranted pending further review by the committee.

(4) "Good cause" shall mean, but not be limited to, those situations in which the employer finds that his circumstance warrants an alternative procedure and where he is able to demonstrate to the committee that such alternative would not have a harmful effect on the health, safety and welfare of the employees involved.

[Order 74-9, § 296-126-130, filed 3/13/74, effective 4/15/74.]

WAC 296-126-200 Applicability. WAC 296-126-200 through 296-126-226 shall apply to persons employed in counselor staff occupations in organized seasonal recreational camps as herein defined.

[Statutory Authority: RCW 49.12.091. 78-03-004 (Order 78-1), § 296-126-200, filed 2/3/78.]

WAC 296-126-202 Definitions. (1) "Department" shall mean the department of labor and industries.

(2) "Committee" shall mean the industrial welfare committee of the department of labor and industries.

(3) "Organized camps," as used herein, shall refer to established resident group camps, which are established and maintained for recreation, education, vacation, or religious purposes, for use by organized groups wherein the activities are conducted on a closely supervised basis, and where day-to-day living facilities, including food and lodging, are provided either free-of-charge or by payment of fee.

(4) "Employ" means to engage, suffer, or permit to work.

(5) "Employee" shall mean any person who is employed in a counselor staff occupation in an organized seasonal recreational camp as herein defined.

(6) "Employer" means any person, association, partnership, private or public corporation who employs or exercises control over wages, hours, or working conditions of one or more employees.

(7) "Minor" shall mean any person under eighteen years of age.

(8) "Counselor staff occupations" shall include all work involving duties primarily relating to guidance, instruction, supervision, and care of campers in organized camps, whether such work involves direct charge of, or responsibility for, such activities, or merely assistance to persons in charge; but shall not include preseason training courses. Counselor staff occupations include, but are not limited to: Head counselor, assistant head counselor, specialist counselor or instructor (such as swimming counselor, arts and crafts counselor, etc.), group or division leader, camp parent, teacher, supervising counselor, senior counselor, counselor, general counselor, bunk counselor, assistant counselor, junior counselor, counselor aide, and kitchen helpers working no more than 27 hours in a given work week.

(9) "Resident counselor staff" shall mean staff who receive lodging and meals from the employer.

(10) "Nonresident counselor staff" shall mean staff who do not receive lodging and meals from the employer.

(11) "Counselor I," "Counselor II," and "Counselor III," shall be defined for purposes of this standard as follows: "Counselor I" is one never before employed in any counselor staff occupations; "Counselor II" is one who has had at least one season's employment in a counselor staff occupation; "Counselor III" is one who has had at least three seasons of employment in a counselor staff occupation.

(12) "Season of employment" is defined as a period of not less than six weeks, nor more than 12 weeks in any one calendar year, except that counselors employed less than six weeks in any one season may accumulate their employment experience from year to year to meet the minimum requirements for counselor grade.

[Statutory Authority: RCW 49.12.091. 78-03-004 (Order 78-1), § 296-126-202, filed 2/3/78.]

WAC 296-126-204 Minimum wage. Except as otherwise provided by chapter 49.46 RCW:

(1) The minimum wage for kitchen helpers working in excess of 27 hours per week, camp cooks, and all employees other than counselor staff, shall be no less than $2.00 per hour for employees 18 years of age or older, and no less than $1.75 for employees under age 18.

(2) Minimum wage rates for counselor staff occupations shall be as follows:

	MINIMUM WEEKLY RATE	
	Nonresident Employee (6-day week)	Resident Employee (6-day week)
COUNSELOR III	$66.00	$51.00
COUNSELOR II	45.00	30.00
COUNSELOR I	36.00	21.00

(3) The minimum daily wage rate for resident or nonresident counselor staff shall be prorated from the six-day basis.

(4) Minimum wage provisions shall not apply to resident campers under the age of 18 who are engaged in an in-training program, which provides prepared instructions and supervision by qualified counselor staff, and which requires no more than 24 on-duty hours weekly. Such resident campers shall (a) carry no responsibility for other campers and no bunk responsibility, except as a defined part of the training program and (b) shall not enter such a program unless their parents or guardians sign an authorization, which includes an outline of the program and a description of the duties and responsibilities involved.

[Statutory Authority: RCW 49.12.091. 78-03-004 (Order 78-1), § 296-126-204, filed 2/3/78.]

WAC 296-126-206 Limitation on number of employees paid in Counselor I and Counselor II rates. In any week, an employer may pay the Counselor I rate to no more than 30 percent of the total number of employees in counselor staff occupations. Furthermore, the total number of employees paid at the Counselor I and Counselor II rates may not exceed 80 percent of the total staff. In small camps (40 campers or under) where the above percentage limitations may be unworkable, the supervisor of employment standards shall have authority to make reasonable adjustments of these limitations upon a showing that the above limitations will work a hardship.

[Statutory Authority: RCW 49.12.091. 78-03-004 (Order 78-1), § 296-126-206, filed 2/3/78.]

WAC 296-126-208 Premium pay for resident counselor staff occupations. At termination of employment, a resident counselor staff member shall be entitled to premium payment of an additional 25 percent of the staff member's weekly rate of pay for each week of employment, unless he or she received 24 hours per week off-duty, 12 hours of which must have been in sequence. The 24 hours off-duty time need not have been accumulated in any one week.

[Statutory Authority: RCW 49.12.091. 78-03-004 (Order 78-1), § 296-126-208, filed 2/3/78.]

WAC 296-126-210 Board, lodging, and other services. The minimum wage rates of resident counselor staff shall be subject to no charge by an employer for lodging or meals furnished by the employer or for any other services furnished in connection with camp business within reason.

[Statutory Authority: RCW 49.12.091. 78-03-004 (Order 78-1), § 296-126-210, filed 2/3/78.]

WAC 296-126-212 Travel expenses. The employer shall pay the fare or make transportation available for any counselor staff member who is required or permitted to supervise, or assist in supervising, campers in transit.

[Statutory Authority: RCW 49.12.091. 78-03-004 (Order 78-1), § 296-126-212, filed 2/3/78.]

WAC 296-126-214 Records. Records showing the names of employees, dates of employment, wages paid, and days worked by them shall be kept by every employer for a period of at least three years and available for inspection by the representatives of the industrial welfare committee of the department of labor and industries at all reasonable times.

[Statutory Authority: RCW 49.12.091. 78-03-004 (Order 78-1), § 296-126-214, filed 2/3/78.]

WAC 296-126-216 Agreements. All employees must enter into a written agreement with the camp administration setting forth the remuneration, room and board, special services provided, and the nature of the work assignment as counselors and leaders. Resident camper parental authorizations and employee agreements are to be kept on file for a three-year period.

[Statutory Authority: RCW 49.12.091. 78-03-004 (Order 78-1), § 296-126-216, filed 2/3/78.]

WAC 296-126-218 Work permits. No minor shall be employed until the employer has applied for and received a permit to employ minors from the department of labor and industries, and has obtained a parental authorization and proof of age document for each minor employee.

[Statutory Authority: RCW 49.12.091. 78-03-004 (Order 78-1), § 296-126-218, filed 2/3/78.]

WAC 296-126-220 Minors' occupations. No minor worker shall be employed in any occupation which the department of labor and industries, through the industrial welfare committee, shall declare to be particularly hazardous for minors under the age specified in the minor work permit regulation, chapter 296-125 WAC.

[Statutory Authority: RCW 49.12.091. 78-03-004 (Order 78-1), § 296-126-220, filed 2/3/78.]

WAC 296-126-222 Sanitation and safety. (1) All places of employment shall be maintained in a sanitary condition in conformity with the requirements for sanitation for camps set by the health services division, department of social and health services and/or the Washington Industrial Safety and Health Act (WISHA).

(2) All places of employment shall be maintained in a safe condition in conformity with the WISHA standards of the department of labor and industries, division of industrial safety and health.

(3) First-aid requirements of the WISHA standards of the department of labor and industries shall be met. In addition,

the provision of an infirmary with the full-time services of a physician and/or registered nurse is recommended for camps operated by one organized group for more than two weeks.

(4) Transportation shall be available at all times for use in case of an emergency and shall be of a nature to render reasonable comfort to an injured person.

(5) If preemployment physical examinations, including preventive inoculations, recommended by public health authorities are required of employees, such examinations shall not be at the expense of the employee.

(6) No employee shall be required or permitted to lift or carry excessive weights. Where weights in excess of 20 pounds are to be lifted, carried, pushed, or pulled as a normal part of an employee's responsibility:

(i) The lifting, carrying, pushing or pulling duties shall be made known to the prospective employee at the time of recruitment, initial employment or reassignment to a lifting job.

(ii) Instruction shall be given such employees on proper lifting techniques in accordance with instructions provided or approved by the department of labor and industries.

(iii) Assurance that adequate instruction in weight lifting techniques have been given as provided in (ii) shall be furnished the committee or its authorized agent upon request.

(7) Employee assignments to counseling duties shall be in keeping with the employee's maturity, knowledge, and skills. The health and welfare of the employee shall be considered in the determination of adequate counselor staff-camper ratios. Personnel should be selected on the basis of standards currently prescribed in the American Camping Association Resident Camp standards.

[Statutory Authority: RCW 49.12.091. 78-03-004 (Order 78-1), § 296-126-222, filed 2/3/78.]

WAC 296-126-226 Penalties. The department shall investigate the complaint of any individual alleging that these standards have been violated. Any employer employing any person in violation of these standards shall upon conviction thereof be punished in accordance with RCW 49.12.170, which states as follows: "Any employer employing any person for whom a minimum wage or standards, conditions, and hours of labor have been specified, at less than said minimum wage, or under standards, or conditions of labor or at hours of labor prohibited by the rules and regulations of the committee; or violating any other of the provisions of this 1973 amendatory act, shall be deemed guilty of a misdemeanor, and shall, upon conviction thereof, be punished by a fine of not less than twenty-five dollars nor more than one thousand dollars."

[Statutory Authority: RCW 49.12.091. 78-03-004 (Order 78-1), § 296-126-226, filed 2/3/78.]

Chapter 296-127 WAC
PREVAILING WAGE

WAC

296-127-010 Definitions for chapter 296-127 WAC.
296-127-011 Time for determining prevailing wage.
296-127-013 Scope of work descriptions.
296-127-01301 Certified asbestos abatement workers.
296-127-01303 Heat and frost insulators and asbestos workers.
296-127-01305 Boilermakers.
296-127-01306 Brick masons.
296-127-01308 Building service employees (janitors, waxers, and window washers).
296-127-01309 Cabinet makers.
296-127-01310 Carpenters.
296-127-01312 Carpenter tenders.
296-127-01313 Carpet and resilient floor layers.
296-127-01315 Cement masons.
296-127-01317 Drywall applicators (drywall nailers and sheetrock installers).
296-127-01318 Drywall finishers (tapers).
296-127-01320 Power line construction electricians.
296-127-01322 Electronic technicians.
296-127-01323 Inside wireman electrician.
296-127-01325 Electrical fixture maintenance workers.
296-127-01327 Elevator constructors.
296-127-01328 Fence erectors and fence laborers.
296-127-01329 Flaggers.
296-127-01331 Glaziers.
296-127-01332 Hod carriers, mason tenders, and mortarmen.
296-127-01333 Heating equipment mechanics.
296-127-01335 Inland boatmen.
296-127-01337 Insulation applicators.
296-127-01339 Ironworkers.
296-127-01340 Laborers in utilities construction.
296-127-01342 Clean-up laborers.
296-127-01344 Laborers.
296-127-01346 Landscape construction.
296-127-01347 Lathers.
296-127-01349 Marble setters.
296-127-01351 Millwrights.
296-127-01352 Metal fabricators.
296-127-01354 Operating engineers (equipment operators).
296-127-01356 Painters.
296-127-01358 Pile drivers.
296-127-01360 Plasterers.
296-127-01362 Playground and park equipment installers.
296-127-01364 Plumbers, pipefitters, and steamfitters.
296-127-01367 Refrigeration mechanic.
296-127-01369 Remote controlled cleaning, inspection and sealing of underground sewer and water systems.
296-127-01370 Roofers.
296-127-01372 Sheet metal workers.
296-127-01374 Sign makers and sign installers.
296-127-01375 Sprinkler fitters.
296-127-01376 Stone masons.
296-127-01377 Outside telephone line construction.
296-127-01378 Telecommunication technicians.
296-127-01379 Terrazzo (artificial marble) workers.
296-127-01382 Terrazzo workers' helpers, tile and marble setters' helpers (finishers).
296-127-01384 Tile setters.
296-127-01386 Traffic control stripers.
296-127-01387 Power line clearance tree trimming.
296-127-01389 Utilities construction (underground sewers and water lines).
296-127-01391 Water well drillers, exploration drillers, water well pump installers, and equipment oilers.
296-127-014 Usual benefits.
296-127-01410 Information concerning prevailing wage usual benefits.
296-127-015 Applicability of prevailing wages for supervisors.
296-127-017 Notice of wage determinations.
296-127-018 Coverage and exemptions of workers involved in the production and delivery of gravel, concrete, asphalt, or similar materials.
296-127-019 Survey methodology.
296-127-020 Interpretation of phrases used in chapter 39.12 RCW.
296-127-021 Apprentice worker.
296-127-022 Overtime according to RCW 49.28.065.
296-127-023 Building service maintenance.
296-127-025 Applicability of joint federal-state standards.
296-127-026 Exemptions for sole owners and their spouses, partnerships, corporations, and employees of public agencies.
296-127-030 Irrigation district exemption.
296-127-040 Statement of intent to pay prevailing wages.
296-127-045 Affidavit of wages paid.
296-127-050 Filing of statements of intent to pay prevailing wages and affidavits of wages paid for contracts under two thousand five hundred dollars.
296-127-060 Director of department of labor and industries to arbitrate disputes—General provisions.
296-127-061 Requests for arbitration.
296-127-062 Conduct of arbitration hearing.

296-127-130	Filing of complaint.
296-127-140	Investigation of complaint.
296-127-150	Notice of violation.
296-127-160	Appeal of notice of violation.
296-127-170	Hearing on notice of violation.
296-127-180	Effect of final decision finding a violation of RCW 39.12.065.
296-127-190	Filing of lien against retainage or bonds.
296-127-200	Surety bond payable to director.
296-127-210	Suit against retainage and bonds.
296-127-220	Distribution of recovery.
296-127-300	Filing and service.
296-127-310	List of violators.
296-127-320	Payroll.
296-127-400	Applicability.
296-127-410	Definitions.
296-127-420	Application for a subprevailing wage certificate.
296-127-430	Conditions for granting a subprevailing wage certificate.
296-127-440	Issuance of a subprevailing wage certificate.
296-127-450	Terms of subprevailing wage certificate.
296-127-460	Renewal of subprevailing wage certificate.
296-127-470	Review.
296-127-990	Severability.

DISPOSITION OF SECTIONS FORMERLY CODIFIED IN THIS CHAPTER

296-127-016 Coverage and exemptions of workers involved in the production and delivery of materials predominantly used in road construction. [Statutory Authority: Chapters 39.04 and 39.12 RCW and RCW 43.22.270. 88-22-046 (Order 88-22), § 296-127-016, filed 10/31/88.] Repealed by 92-01-104, filed 12/18/91, effective 1/31/92. Statutory Authority: Chapters 39.04 and 39.12 RCW and RCW 43.22.270.

WAC 296-127-010 Definitions for chapter 296-127 WAC. (1) "Department" means the department of labor and industries.

(2) "Director" means the director of the department or his or her duly authorized deputy or representative.

(3) "Industrial statistician" means the industrial statistician of the department's employment standards, apprenticeship, and crime victims (ESAC) division.

(4) "Assistant director" means the assistant director of the employment standards, apprenticeship, and crime victims (ESAC) division or his or her duly authorized deputy or representative.

(5) "Contractor" means:

(a) The prime contractor, and each and every subcontractor, required to be registered under chapter 18.27 RCW and/or licensed under chapter 19.28 RCW, that performs any work on a public works project site, and/or is required to pay industrial insurance premiums as a construction company.

(b) Employers engaged in shipbuilding and ship repair, building service maintenance, and any fabricator or manufacturer that produces nonstandard items specifically for a public works project.

(c) Employers that contract with contractors or subcontractors for the purpose of the production and/or delivery of materials pursuant to the terms of WAC 296-127-018.

(6) The term municipality shall include every city, county, town, district, political subdivision, or other public agency thereof which is authorized by law to require the execution of public work, except drainage districts, diking districts, diking and drainage improvement districts, drainage improvement districts, diking improvement districts, consolidated diking and drainage improvement districts, consolidated drainage improvement districts, consolidated diking improvement districts, irrigation districts, or any such other districts as shall from time to time be authorized by law for the reclamation or development of waste or undeveloped lands.

(7)(a) The term "public work" shall include:

(i) All work, construction, alteration, enlargement, improvement, repair, and/or demolition that is executed by contract, purchase order, or any other legal agreement and that is executed at the cost of the state of Washington or of any municipality. The source of the funding shall not determine the applicability of the statute, and may include, but is not limited to, such sources as those payments made through contracts with insurance companies on behalf of the insured state or municipality;

(ii) All work, construction, alteration, enlargement, improvement, repair, and/or demolition which, by law, constitutes a lien or charge on any property of the state or of a municipality;

(iii) All work, construction, alteration, repair, or improvement, other than ordinary maintenance that the state or a municipality causes to be performed by a private party through a contract to rent, lease, or purchase at least fifty percent of the project by one or more state agencies or municipalities, pursuant to RCW 39.04.260;

(iv) Maintenance, except ordinary maintenance as defined by (b)(iii) of this subsection, when performed by contract. Maintenance is defined as keeping existing facilities in good usable, operational condition;

(v) Janitorial and building service maintenance as defined by WAC 296-127-023, when performed by contract, on public buildings and/or assets; and

(vi) The fabrication and/or manufacture of nonstandard items produced by contract specifically for a public works project as defined by (a)(i) through (v) of this subsection.

(b) The term "public work" shall not include:

(i) Work, construction, alteration, enlargement, improvement, repair, demolition, and/or maintenance for which no wage or salary compensation is paid, consistent with the requirements of RCW 35.21.278;

(ii) The construction, alteration, repair, or improvement of any municipal street railway system;

(iii) Ordinary maintenance which is defined as work not performed by contract and that is performed on a regularly scheduled basis (e.g., daily, weekly, monthly, seasonally, semiannually, but not less frequently than once per year), to service, check, or replace items that are not broken; or work not performed by contract that is not regularly scheduled but is required to maintain the asset so that repair does not become necessary.

(8) "Contract" means a contract, purchase order, or any other legal agreement in writing for public work to be performed for a fixed or determinable amount, which is duly awarded after advertisement and competitive bid. A contract that is awarded from a small works roster, or under the emergency provisions of state law, need not be advertised.

(9) "Residential construction" means construction, alteration, repair, improvement, or maintenance of single family dwellings, duplexes, apartments, condominiums, and other residential structures not to exceed four stories in height, including basement, when used solely as permanent residences. It does not include the utilities construction (water

and sewer lines), or work on streets, or work on other structures (e.g., for recreation and business.)

[Statutory Authority: RCW 39.12.070. 94-01-100, § 296-127-010, filed 12/16/93, effective 1/16/94. Statutory Authority: Chapters 39.04 and 39.12 RCW and RCW 43.22.270. 92-01-104, § 296-127-010, filed 12/18/91, effective 1/31/92; 88-22-046 (Order 88-22), § 296-127-010, filed 10/31/88. Statutory Authority: RCW 39.12.050, 39.12.065, 43.22.270 and 51.04.020. 86-03-063 (Order 85-28), § 296-127-010, filed 1/17/86. Statutory Authority: RCW 39.12.015, 39.12.060 and HB 795, 1982 1st ex.s. c 38. 82-18-041 (Order 82-28), § 296-127-010, filed 8/27/82.]

WAC 296-127-011 Time for determining prevailing wage. (1) Prevailing wage rates for all public work contracts will be determined by the industrial statistician and published on the first business day of February and the first business day of August of each year. These rates shall become effective thirty days after the date of publication. However, the industrial statistician may revise an established prevailing wage rate in response to an administrative or judicial finding overturning the established rate, or at any time necessary to correct an error, with such revision becoming effective thirty days after the date of publication. However, in the event of an emergency as determined by the director of the department, such revised rate shall take effect upon publication.

(2) The department shall establish deadlines for the submission of:

(a) Completed wage surveys, for inclusion of submitted data in the survey computations;

(b) Newly ratified collective bargaining agreements for inclusion in the semiannual prevailing wage publication;

(c) Notice of collectively bargained wage and benefit adjustments, and/or relevant contractual changes, for inclusion in the semiannual prevailing wage publication; and

(d) Notice of changes in apprenticeship standards and incremental wage rates for inclusion in the semiannual prevailing wage publication.

(3) The applicable prevailing wage rates for a given public works contract will be determined as follows:

(a) For all public works contracts, except janitorial or building service maintenance contracts, the applicable prevailing wage rates shall be the rates that are in effect on the date when bids by prime contractors are due for submission to contract awarding agencies. These rates shall remain in effect for the duration of the contract.

(b) If contracts are not awarded within six months of the date bids are due, the applicable prevailing wage rates shall be those that are in effect on the date the contract is awarded. These rates shall remain in effect for the duration of the contract.

(c) For work orders issued under job order contracts pursuant to chapter 301, Laws of 2003, the appropriate prevailing wage rates shall be the rates that are in effect on the date when the individual work order is issued.

(4) If a contract for public work is not awarded pursuant to bids, the applicable prevailing wage rates shall be those that are in effect on the date when the contract is executed. These rates shall remain in effect for the duration of the contract.

(5) A schedule of the applicable prevailing wage rates must be included by:

(a) Contract awarding agencies, in the bid specifications and contract documents for each contract.

(b) Contractors, in the bid and/or contract documents provided to subcontractors.

[Statutory Authority: Chapter 39.12 RCW, RCW 43.22.270, 43.22.051, and 2003 c 301. 04-10-083, § 296-127-011, filed 5/4/04, effective 6/4/04. Statutory Authority: Chapters 39.04 and 39.12 RCW and RCW 43.22.270. 92-01-104, § 296-127-011, filed 12/18/91, effective 1/31/92; 88-22-046 (Order 88-22), § 296-127-011, filed 10/31/88. Statutory Authority: RCW 39.12.015, 39.12.060 and HB 795, 1982 1st ex.s. c 38. 82-18-041 (Order 82-28), § 296-127-011, filed 8/27/82.]

WAC 296-127-013 Scope of work descriptions. (1) In order to determine applicable prevailing wage rates, the director or his/her designee will issue scope of work descriptions for each trade and occupation recognized as being involved in public work.

(2) The scope of work descriptions shall be created using authoritative sources available to the department, such as:

(a) Washington state apprenticeship and training council approved apprenticeship standards;

(b) Collective bargaining agreements;

(c) Dictionaries of occupational titles;

(d) Experts from organized labor, licensed contractors, and contractors' associations;

(e) Recognized labor and management industry practice.

(3) The applicable prevailing wage rates for workers employed on public works projects shall be determined by the scopes of work performed by those workers, and not by their specific job titles.

(4) The applicable scope of work description for a public works contract is the scope of work description that is in effect on the date that the bids are due to be submitted to the contract awarding agency. If the contract is not awarded within six months of the bid due date, then the applicable scope of work description shall be that which is in effect on the date that the contract is awarded. The same scope of work description shall remain in effect for the duration of the contract.

(5) In the event a dispute arises regarding a scope of work description following the award of a public works contract, the aggrieved party may request an arbitration hearing pursuant to the provisions of RCW 39.12.060, WAC 296-127-060, 296-127-061, and 296-127-062.

[Statutory Authority: Chapter 39.12 RCW, RCW 43.22.270 and 43.22.051. 00-15-077, § 296-127-013, filed 7/19/00, effective 7/19/00. Statutory Authority: Chapters 39.04 and 39.12 RCW and RCW 43.22.270. 92-01-104, § 296-127-013, filed 12/18/91, effective 1/31/92; 88-22-046 (Order 88-22), § 296-127-013, filed 10/31/88.]

WAC 296-127-01301 Certified asbestos abatement workers. For the purpose of the Washington state public works law, chapter 39.12 RCW, the department of labor and industries has established the work classification of certified asbestos abatement workers.

Asbestos abatement work may be performed by any worker who is certified as an asbestos remover and encapsulator, except when the work performed is incidental to the normal scope of work of another trade or occupation. Incidental asbestos work includes only that work of short duration which is indistinguishable from the work of another established classification.

This classification does not include work falling within the scope of work for asbestos workers. That work is prima-

rily related to the installation of insulation material around mechanical systems.

Certified asbestos abatement workers perform all of the work, including any cleanup required in connection with the abatement of asbestos, coming within the purpose and scope of chapter 49.26 RCW and chapter 296-65 WAC. WAC 296-65-003 provides definitions which establish the scope of this work.

[Statutory Authority: Chapter 39.12 RCW, RCW 43.22.270 and 43.22.051. 00-15-077, § 296-127-01301, filed 7/19/00, effective 7/19/00.]

WAC 296-127-01303 Heat and frost insulators and asbestos workers. For the purpose of the Washington state public works law, chapter 39.12 RCW, heat and frost insulators and asbestos workers apply insulation materials to mechanical systems to reduce loss or absorption of heat, prevent moisture condensation and to deaden sound and prevent vibration.

The work includes, but is not limited to:

• The preparation and physical distribution on the job site of asbestos, cork, plastic, magnesia or similar insulation materials.

• Insulation of mechanical systems, plumbing, heating systems, any insulation connected with air handling systems, refrigeration piping and related vessels, boilers, tanks, flues breechings, evaporators, turbines, fittings, valves, ducts, flues, vats and all insulation connected with steam, condensate, feedwater and/or chilled water, or insulation of any mechanical system for sound control.

• All cleanup required in connection with heat and frost insulators and asbestos worker's work.

[Statutory Authority: Chapter 39.12 RCW, RCW 43.22.270 and 43.22.051. 00-15-077, § 296-127-01303, filed 7/19/00, effective 7/19/00.]

WAC 296-127-01305 Boilermakers. For the purpose of the Washington state public works law, chapter 39.12 RCW, boilermakers assemble, erect, repair and clean boilers, tanks, vats and pressure vessels according to blueprint specifications, using hand tools and portable power tools and equipment.

The work includes, but is not limited to:

• Locating and marking of reference points for columns or plates on foundations, using master straightedge, squares, transit and measuring tape.

• Using rigging or cranes to lift parts to specified positions.

• Aligning structures or plate sections, using plumb bobs, levels, wedges, dogs or turnbuckles.

• Drilling, reaming, chipping, caulking and grinding of structures and sections and bolting or welding them together.

• Setting of drums and headers and installation of tubes.

• And all the cleanup required in connection with boilermakers work.

[Statutory Authority: Chapter 39.12 RCW, RCW 43.22.270 and 43.22.051. 00-15-077, § 296-127-01305, filed 7/19/00, effective 7/19/00.]

WAC 296-127-01306 Brick masons. For the intents and purposes of the Washington state public works law, chapter 39.12 RCW, the job description for brick masons is as follows:

• Prepare and lay building materials such as brick, concrete block, cinder block, terra cotta block, marble and granite block, and related materials to construct, repair and waterproof structures, such as walls, partitions, arches, sewers, chimneys or smokestacks, piers, abutments, walks and curbstones.

• Measure distance from reference points and mark guidelines on working surface to lay out work.

• Spread soft layer of mortar that serves as base and binder for brick (or block), using trowel.

• Apply mortar to end of brick and position brick in mortar bed.

• Tap brick with trowel to level, align, and embed in mortar, allowing specified thickness of joint. Remove excess mortar from face of brick, using trowel.

• Finish mortar between brick with pointing tool or trowel.

• Break bricks to fit spaces too small for whole brick, using edge of trowel or brick hammer.

• Determine vertical and horizontal alignment of courses, using plumb bob, gaugeline and level. Fasten brick or terra cotta veneer to face of structures, with tie wires embedded in mortar between bricks, or in anchor holes in veneer brick.

[Statutory Authority: Chapter 39.12 RCW, RCW 43.22.270 and 43.22.051. 00-15-077, § 296-127-01306, filed 7/19/00, effective 7/19/00.]

WAC 296-127-01308 Building service employees (janitors, waxers, and window washers). For the purpose of the Washington state public works law, chapter 39.12 RCW, the work of building service employees includes, but is not limited to:

(1) Janitors. Empty trash and damp wipe containers. Dust chairs, sides of desks, top of filing cabinets, panelled walls, doors, ledges and picture frames within easy reach. Damp wipe desk tops, telephones and desk fixtures. Damp mop floors. Vacuum upholstered furniture and draperies. Wash vinyl furniture with cleaning solution. Wash doors and other surfaces and spot wash painted walls. Clean door glass and inside partition glass. Vacuum and shampoo carpets.

(2) Utility janitors. Performs the following duties in addition to those performed by janitors: Waxing of floors (when not performed by traveling waxers), high wall and ceiling washing requiring the use of a ladder, and minor repairs and maintenance necessary to the operation of the building.

(3) Waxers. Waxing of floors.

(4) Window washers. Washing of all windows, other than inside partition glass and door glass, washing of painted walls, (when not done as a prerequisite to repainting) and wall paper cleaning.

(5) And all the cleanup required in connection with building service employees.

[Statutory Authority: Chapter 39.12 RCW, RCW 43.22.270 and 43.22.051. 00-15-077, § 296-127-01308, filed 7/19/00, effective 7/19/00.]

WAC 296-127-01309 Cabinet makers. For the purpose of the Washington state public works law, chapter 39.12 RCW, cabinet makers set up and operate a variety of woodworking machines and use various hand tools to fabricate and

repair wooden cabinets, sashes, doors, and furniture in a shop or plant.

The work includes, but is not limited to:

• Study blueprints or drawings of articles to be constructed or repaired and plan sequences of cutting or shaping operations to be performed.

• Mark outline or dimensions of parts on paper or lumber stock, according to blueprint or drawing specifications. Match materials for color, grain or texture.

• Set up and operate woodworking machines, such as: Power saws, jointer, mortiser, tenoner, molder and shaper to cut and shape parts from woodstock.

• Trim component parts of joints to assure snug fit, using hand tools, such as: Planes, chisels, or wood files. Bore holes for insertion of screws or dowels by hand or using boring machine. Glue, fit and clamp parts and subassemblies together to form a complete unit, using clamps or clamping machine. Drive nails or other fasteners into joints at designated places to reinforce joints.

• Sand and scrape surfaces and joints of articles to prepare articles for finishing. Dip, brush or spray assembled articles with protective or decorative materials, such as stain, varnish, or paint.

• Install hardware such as: Hinges, catches and drawer pulls.

[Statutory Authority: Chapter 39.12 RCW, RCW 43.22.270 and 43.22.051. 00-15-077, § 296-127-01309, filed 7/19/00, effective 7/19/00.]

WAC 296-127-01310 Carpenters. For the purpose of the Washington state public works law, chapter 39.12 RCW, carpenters construct, erect, install and repair structures, structural members and fixtures made of wood, plywood, wallboard and materials that take the place of wood, such as plastic, metals, composites, and fiberglass, using carpenter hand tools and power tools.

The work includes, but is not limited to:

• Build rough wooden structures, such as concrete forms, scaffolds, wooden bridges, trestles, coffer dams, tunnel and sewer support; welding and burning.

• Install ladders, handrails, walkways, platforms and gangways.

• Install door and window bucks (rough frames in which finished frames are inserted) in building frame work and brace them with boards nailed to frame work.

• Install subflooring in buildings.

• Nail plaster grounds (wood or metal strips) to studding.

• Fit and nail sheathing on outer walls and roofs on buildings.

• Construct, erect, install and repair commercial, industrial and residential structures.

• Select specified type of lumber or other materials.

• Prepare layout, using rule, framing square and calipers.

• Mark cutting and assembling lines on materials, using pencil, chalk, and marking gauge.

• Shape materials to prescribed measurements, using saws, chisels and planes.

• Assemble, cut and shape materials and fasten them together with nails, dowel pins, or glue.

• Verify trueness of structure with plumb bob and carpenter's level.

• Apply decorative paneling to walls.

• Erect frame work for structures and lay subflooring.

• Cover subfloor with building paper to keep out moisture and lay hardwood, parquet and wood-strip-lock floors by nailing floors to subfloor or cementing them to mastic or asphalt base.

• Build stairs and layout and install partitions and cabinets.

• Install metal roof decking and metal siding, regardless of the fastening method, or what it is fastened to.

• Install all other types of siding, regardless of composition, fastening method, or what it is fastened to.

• Fit and install prefabricated wooden cabinets, window frames, door frames, doors, weather stripping, interior and exterior trim, and finish hardware, such as locks, letter drops and kick plates.

• Apply acoustical tile to ceilings and walls of buildings to reduce reflecting of sound and to decorate rooms.

• Cement tile to masonry surface.

• Nail channels or wood furring strips to surfaces to provide mounting for tile.

• Place building paper between tile and furring strip to keep out moisture.

• Nail, screw, or staple tile to wooden furring strips.

• Nail or screw moulding to walls to support and seal joint between ceiling tile and wall. Hang dry lines to wall mauling.

• Drive hanger inserts into reinforced concrete ceiling, suspend and bend hanger wires at points touching dry lines.

• Thread wires through holes in main runners and cut and attach cross supports to suspended runners and wall mauling.

• Cut tiles for fixtures and borders and insert tiles into supporting frame work.

[Statutory Authority: Chapter 39.12 RCW, RCW 43.22.270 and 43.22.051. 00-15-077, § 296-127-01310, filed 7/19/00, effective 7/19/00.]

WAC 296-127-01312 Carpenter tenders. For the purpose of the Washington state public works law, chapter 39.12 RCW, carpenter tenders are laborers who assist carpenters engaged in construction, erection, installation and repair of wooden structures and fixtures. Carpenter tenders perform a variety of routine tasks which do not require the use of carpenter tools, such as:

• Cleaning materials, equipment, tools and work areas.

• Moving and lifting building materials, tools and supplies.

• Handing materials, tools and supplies to carpenters.

• Dismantling temporary wooden structures.

• Assisting carpenters in stripping forms and shoring.

• Cleaning and moving forms.

[Statutory Authority: Chapter 39.12 RCW, RCW 43.22.270 and 43.22.051. 00-15-077, § 296-127-01312, filed 7/19/00, effective 7/19/00.]

WAC 296-127-01313 Carpet and resilient floor layers. For the purpose of the Washington state public works law, chapter 39.12 RCW, carpet and resilient floor layers do the measuring, cutting, sewing, taping, fitting, laying and installing of oil cloth, matting, linen, carpet, synthetic turf, linoleum, vinyl, plastic, rubber, cork, mastic, asphalt, mastipave, tile and chalkboard, nonslip or abrasive materials, resilient, decorative seamless surface coatings (except terrazzo, magnesite and latex built-up floors) and all other resilient

coverings on floors, walls, counters, table tops and ceilings when cemented, tacked or otherwise applied to a base, whether used as shock-absorbing, sound-absorbing, or decorative coverings.

The work includes, but is not limited to:

• Handling of the materials at the site of installation.

• Sweeping, scraping, sanding, or chipping dirt and irregularities from base surfaces and filling cracks with putty, plaster, or cement grout to form smooth, clean foundations.

• All necessary preparation work and finish work, such as drilling holes for sockets and pins, installation of underlayment, sanding and filling, fitting of metal edgings, metal corners and caps and fitting devices for attachment of such materials.

• Spreading of adhesive cement over floor to cement foundation material to the floor. Laying covering on cement. Rolling finished floor to smooth it out and press cement into base and covering.

• All the cleanup required in connection with carpet and resilient floor layers work.

[Statutory Authority: Chapter 39.12 RCW, RCW 43.22.270 and 43.22.051. 00-15-077, § 296-127-01313, filed 7/19/00, effective 7/19/00.]

WAC 296-127-01315 Cement masons. For the purpose of the Washington state public works law, chapter 39.12 RCW, cement masons perform all work where finishing tools are used.

The work includes, but is not limited to:

• The setting of screeds, the rodding (buildings), shaping, smoothing and finishing of the surfaces of freshly poured concrete floors, walls, sidewalks, curbs, steps and stairways, the finishing of extruded barrier rails, or any other concrete surface requiring finishing, using hand tools or power tools, including floats, trowels, screeds and straightedge.

• The removing of rough or defective spots from concrete surfaces, using grinder or chisel and hammer and patching holes with fresh concrete or epoxy compound preparatory to sacking. (The finishing of a large surface of patched holes.)

• The moulding of expansion joints and edges, using edging tools, jointers and straightedge.

• The application of penetrating sealer and primer protective coatings to concrete floors and steps for the first twenty-four hours after pouring, when part of the finishing process.

• The installation of seamless composition floors and the installation and finishing of epoxy based coatings or polyester based linings to all surfaces, when the coatings or linings are applied by spraying or troweling.

• Sandblasting or waterblasting for architectural finish or preparatory to patching.

• The setting of all forms one board high.

• The cutting of joints with concrete saw for the control of cracks in buildings and contiguous to buildings.

• The setting of concrete curb, gutter and sidewalk forms as a composite crew with laborers.

• All cleanup work required in connection with the above work.

[Statutory Authority: Chapter 39.12 RCW, RCW 43.22.270 and 43.22.051. 00-15-077, § 296-127-01315, filed 7/19/00, effective 7/19/00.]

WAC 296-127-01317 Drywall applicators (drywall nailers and sheetrock installers). For the purpose of the Washington state public works law, chapter 39.12 RCW, drywall applicators install plasterboard or other wallboards to ceilings and interior walls of buildings, using hand tools and portable power tools.

The work includes, but is not limited to:

• Installing horizontal and vertical metal studs for attachment of wallboard on interior walls.

• Cutting angle iron and channel iron to specified size and suspending angle iron grid and channel iron from ceiling, using wire.

• Cutting wallboard to size.

• Cutting openings for electrical and other outlets.

• Nailing wallboard to wall and ceiling supports.

• Trimming rough edges from wallboard to maintain even joints.

• Nailing prefabricated metal pieces around windows and doors and between dissimilar materials to protect drywall edges.

[Statutory Authority: Chapter 39.12 RCW, RCW 43.22.270 and 43.22.051. 00-15-077, § 296-127-01317, filed 7/19/00, effective 7/19/00.]

WAC 296-127-01318 Drywall finishers (tapers). For the purpose of the Washington state public works law, chapter 39.12 RCW, drywall finishers perform all the preparatory work and finishing work involved in covering interior walls and ceilings with decorative or protective finish materials.

The work includes, but is not limited to:

• Handling of all materials after the initial unloading at the job site, including the distribution to the points of application.

• Erecting, moving and dismantling of all scaffolding.

• All preparatory work of taping, sealing, finishing and sanding of joints between plasterboard or other wallboard.

• Spotting, caulking, pointing and sealing of cracks and holes in walls and ceilings.

• Applying protective coverings prior to the application of the finish materials.

• Spackling of surfaces and application of texture finishes where adhesive materials are used.

• Applying all primers, sealers, decorative or protective finish materials, regardless of the method of application.

• Installing metal moulding at corners instead of sealant and tape.

• Removing all drywall material scraps and all cleaning work, including scraping of floors.

[Statutory Authority: Chapter 39.12 RCW, RCW 43.22.270 and 43.22.051. 00-15-077, § 296-127-01318, filed 7/19/00, effective 7/19/00.]

WAC 296-127-01320 Power line construction electricians. For the purpose of the Washington state public works law, chapter 39.12 RCW, power line construction electricians erect, maintain and repair transmission poles (whether built of wood, metal or other material), fabricated metal transmission towers, outdoor substations, switch racks, or similar electrical structures, electric cables and related auxiliary equipment for high-voltage transmission and distribution power lines used to conduct energy between generating stations, substations and consumers.

The work includes, but is not limited to:

• The moving of men, tools, or equipment. The sorting, loading and moving of materials from the first drop. The handling, assembling and erecting of all necessary materials.

• The trenching, digging, and backfilling of vaults, holes for poles and anchors (by hand or mechanical equipment), guying, fastening to the stub-in on concrete footings or pads, assembling of the grillage, grounding of all structures, the stringing and installation of transformers.

• Constructing, repairing and maintaining highway and street lighting systems and highway and street traffic signal systems.

• Trimming trees and brush prior to the construction of new power lines, during repair of damaged lines, or as part of routine maintenance of the lines (tree trimmers).

• All the cleanup required in connection with line construction electrician work.

All the classifications listed below work under the supervision of linemen and assist linemen.

(1) Groundmen. Performs the following tasks:

• Manual digging of pole holes, anchor holes and trenches.

• Assists in framing of poles, pulling guys.

• Assembles and erects fixtures.

• Tamping and compacting.

• Driving of 1/2 to 3/4 ton pickup truck.

(2) Head groundman. Performs the following tasks:

• Manual digging of pole holes, anchor holes, and trenches.

• Assists in framing of poles, pulling guys.

• Assembles and erects fixtures.

• Tamping and compacting.

• Driving of 1/3 to 3/4 ton pickup truck for material or man haul.

(3) Line equipment operators. They operate caterpillars, trucks equipped with winch and/or boom, hydraulically operated backhoes with or without front end loaders, mounted booms, and any other equipment that does not come within the scope of heavy equipment operators.

(4) Heavy line equipment operators. They operate any piece of equipment which, in accordance with manufacturer's recommended specifications is capable of operating with one hundred or more aggregate feet of boom, be it crane, backhoe, clam shell, drag line, or shovel.

[Statutory Authority: Chapter 39.12 RCW, RCW 43.22.270 and 43.22.051. 00-15-077, § 296-127-01320, filed 7/19/00, effective 7/19/00.]

WAC 296-127-01322 Electronic technicians. For the purpose of the Washington state public works law, chapter 39.12 RCW, the scope of work for electronic technicians is as follows:

(1) The installation, operation, inspection, maintenance, repair and service of:

(a) Radio, television and recording systems and devices.

(b) Systems for paging, intercommunication, public address, wired music, clocks, security and surveillance systems and mobile radio systems.

(c) Fire alarm and burglar systems.

(2) The installation of nonmetallic conduits and incidental shielded metallic conduits of no longer than ten feet nor larger than one inch, when installed for the specific purpose of carrying low voltage wiring.

(3) Pulling wiring through the type of conduit described under subsection (2) of this section, when the wiring is installed for the specific purpose of carrying low voltage electricity.

(4) All the cleanup required in connection with electronic technician's work.

[Statutory Authority: Chapter 39.12 RCW, RCW 43.22.270 and 43.22.051. 00-15-077, § 296-127-01322, filed 7/19/00, effective 7/19/00.]

WAC 296-127-01323 Inside wireman electrician. For the purpose of the Washington state public works law, chapter 39.12 RCW, inside wireman electricians plan the layout, install and repair conduit, wiring, electrical fixtures, apparatus, and control equipment in buildings and adjacent yards to provide electricity for power and lighting.

(1) They assemble, install and maintain all electrical lighting, electric heating and cooling equipment, standby motor generators, electric heat pumps, under-floor duct and luminous ceilings.

They install, repair and maintain highway and street lighting systems and highway and street traffic signal systems.

The work includes, but is not limited to:

• The handling and moving of any electrical materials, equipment and apparatus on the job site.

• Welding, burning, brazing, bending, drilling and shaping of all copper, silver, aluminum, angle iron and brackets to be used in connection with the installation and erection of electrical wiring and equipment.

• Measuring, cutting, bending, threading, forming, assembling and installing of electrical conduit, using such tools as hacksaw, pipe threader and conduit bender.

• Pulling wiring through conduit.

• The installation of conduit and interduct raceways for fiber optic cable and the pulling of fiber optic cable through these raceways, except telephone conduit and cable.

Cutting holes in floors and walls for electrical conduit:

• With point and hammer.

• Core-drilled.

• Chasing and channeling necessary to complete any electrical work, including the fabrication and installation of duct and manhole forms incidental to electrical installation.

• Splicing wires by stripping insulation from terminal leads with knife or pliers, twisting or soldering wires together and applying tape or terminal caps.

• Installation and maintenance of lighting fixtures.

• Connecting wiring to lighting fixtures and power equipment.

Assembling and installing of conduit switches, relays, junction boxes, circuit breaker panels, and related accessories and controls.

• Testing continuity of circuit to insure electrical compatibility and safety of components.

• All cleanup required in connection with electrical work.

(2) The following power line construction classifications may assist journeymen wireman in the installation, repair and maintenance of highway and signal lighting systems and highway and street traffic signal systems:

(a) Groundmen.

• Performs the following tasks:

• Manual digging of pole holes, anchor holes and trenches.

• Assembles and erects fixtures.

• Assists in framing of poles, pulling guys.

• Tamping and compacting.

• Driving of 1/2 or 3/4 ton pickup truck.

(b) Head groundman.

• Performs the following tasks:

• Manual digging of pole holes, anchor holes and trenches.

• Assists in framing of poles, pulling guys.

• Assembles and erects fixtures.

• Tamping and compacting.

• Driving of 1/3 or 3/4 ton pickup truck for materials or man haul.

(c) Line equipment operators. Operate caterpillars, trucks equipped with winch and/or boom, hydraulically operated backhoes with or without front end loaders, mounted booms, and any other equipment that does not come within the scope of heavy equipment operators.

(d) Heavy line equipment operators. Operate any piece of equipment which, in accordance with manufacturer's recommended specifications is capable of operating with one hundred or more aggregate feet of boom, be it crane, backhoe or clam shell, drag line, or shovel.

[Statutory Authority: Chapter 39.12 RCW, RCW 43.22.270 and 43.22.051. 00-15-077, § 296-127-01323, filed 7/19/00, effective 7/19/00.]

WAC 296-127-01325 Electrical fixture maintenance workers. For the purpose of chapter 39.12 RCW, Washington state prevailing wage law, the prevailing wage for electrical fixture maintenance worker is required for the following work:

Cleaning of all types of lighting fixtures, luminous ceilings, all types of diffused areas and ceiling lighting. The work also includes replacement of lamps, ballasts, sockets and the installation of energy efficiency upgrades. This work must be limited to nonresidential fixture bodies, but may also include replacement or retrofitting of remote located ballasts with approved products.

Work beyond that which is described above must be paid at another electrical classification such as inside wireman electrician or residential electrician. Electrical fixture maintenance worker does not include installation of new fixtures or branch circuits, movement or relocation of existing fixtures, or alteration of existing branch circuits.

[Statutory Authority: Chapter 39.12 RCW, RCW 43.22.270 and 43.22.051. 00-15-077, § 296-127-01325, filed 7/19/00, effective 7/19/00.]

WAC 296-127-01327 Elevator constructors. For the purpose of the Washington state public works law, chapter 39.12 RCW, elevator constructors assemble and install electric and hydraulic freight and passenger elevators, escalators, and dumbwaiters.

The work includes, but is not limited to:

• Studies blueprints and lays out location of framework, counterbalance rails, motor pump, cylinder, and plunger foundations.

• Drills holes in concrete or structural steel members with portable electric drill, secures anchor bolts or welds brackets to support rails and framework, and verifies alignment with plumb bob and level.

• Cuts prefabricated sections of framework, rails, and other elevator components to specified dimensions, using acetylene torch, power saw, and disc grinder.

• Installs cables, counterweights, pumps, motor foundations, escalator drives, guide rails, elevator cars, and control panels.

• Positions electric motor and equipment on top of elevator shaft, using hoists and cable slings.

• Connects electrical wiring to control panels and electric motors.

• Installs safety and control devices.

• All cleanup required in connection with the installation of elevators.

[Statutory Authority: Chapter 39.12 RCW, RCW 43.22.270 and 43.22.051. 00-15-077, § 296-127-01327, filed 7/19/00, effective 7/19/00.]

WAC 296-127-01328 Fence erectors and fence laborers. For the purpose of the Washington state public works law, chapter 39.12 RCW, fence erectors and fence laborers erect and repair metal and wooden fences and fence gates around industrial establishments (schools, playgrounds, etc.), residences, farms and along highways using power tools and hand tools.

The work of the fence erectors includes, but is not limited to:

(1) Fence erector.

• Lays out fence line, using tape measure, and marks for postholes.

• Digs postholes with mechanical posthole digger or power-driven auger.

• Aligns posts, using line or by sighting along edges of posts.

• Verifies vertical alignment of posts with plumb bob or spirit level.

• Attaches fence-rail support to post, using hammer and pliers.

• Cuts metal tubing, using pipe cutter, and inserts tubing through rail support.

• Completes top fence rail of metal fence by connecting tube sections, using metal sleeves.

• Attaches rails or tension wire along bottoms of posts to form fencing frame.

• May weld metal parts together, using portable gas welding equipment.

• Stretches wire, wire mesh, barbed wire, or chain link fencing between posts and attaches fencing to frame.

• Assembles gate and fastens in position, using hand tools.

• Saws required length of lumber to make rails for wooden fence.

• Nails top and bottom rails to fence posts, or inserts them in slots on posts.

• Nails pointed slats to rails to construct picket fence.

• Erects alternate panel, basket weave, and louvered fences.

(2) Fence laborer. In addition to assisting the fence erector in the performance of the tasks described above, the work of the fence laborer includes, but is not limited to:

• Digs holes for posts with spade or posthole digger.

• Blasts rock formations with dynamite to facilitate digging of holes.

• Sets metal or wooden posts in upright position in holes.

• Mixes concrete by hand or by use of a cement mixer.

• Pours concrete around base of posts or tamps soil into holes to embed posts.

• All the cleanup required in connection with the erection of fences.

[Statutory Authority: Chapter 39.12 RCW, RCW 43.22.270 and 43.22.051. 00-15-077, § 296-127-01328, filed 7/19/00, effective 7/19/00.]

WAC 296-127-01329 Flaggers. For the intents and purposes of the Washington state public works law, chapter 39.12 RCW, the scope of work for flaggers is as follows:

• Controls and directs pedestrian and vehicular traffic through construction projects using sign, hand and flag signals, warning paddles and radio communication.

• Informs drivers of detour routes through construction sites. Distributes signs, markers, flares, barricades, cones and other traffic control devices along construction sites in designated patterns.

• Is responsible for the safety of the workers and the public on construction sites.

• Must have completed a Washington state approved flagging course, or the equivalent.

[Statutory Authority: Chapter 39.12 RCW, RCW 43.22.270 and 43.22.051. 00-15-077, § 296-127-01329, filed 7/19/00, effective 7/19/00.]

WAC 296-127-01331 Glaziers. For the purpose of the Washington state public works law, chapter 39.12 RCW, glaziers select, cut, prepare, handle, install or remove all window glass, plate glass, and all other types of glass, including structural glass, mirror glass, tempered and laminated glass, safety or protection glass, all types of insulating glass units, all plastics or other similar materials when used in place of glass and when set or glazed with putty, moulding rubber, cement, lead and all types of mastic, or other materials used in place of same.

Glaziers install the above materials in windows, louvers, doors, partitions, skylights, and on building fronts, walls, ceilings and tables, whether the materials are set in wood, stone, cement, or metal of all types.

The work includes, but is not limited to:

• Install mirrors of all types.

• Mark outline or pattern on glass and cut glass, using glasscutter. Break off excess glass by hand or with notched tool.

• Fasten glass panes into wood sash with glazier's points and spread smooth putty around edge of panes with knife to seal joints.

• Install metal window and door frames into which glass panels are to be fitted, such as fixed or sliding patio doors and vented, fixed or sliding windows.

• Bolt metal hinges, handles, locks, and other hardware to prefabricated glass doors. Set glass doors in frame and fit hinges.

• Install metal-framed glass enclosures for showers, bath tubs, and skylights where the glass installation and frame assembly is a single operation.

• Install mirror or structural glass on building fronts, walls, ceilings, or tables, using mastic, screws or decorative moulding.

• All the cleanup required in connection with glazing work.

[Statutory Authority: Chapter 39.12 RCW, RCW 43.22.270 and 43.22.051. 00-15-077, § 296-127-01331, filed 7/19/00, effective 7/19/00.]

WAC 296-127-01332 Hod carriers, mason tenders, and mortarmen. For the purpose of the Washington state public works law, chapter 39.12 RCW, hod carriers, mason tenders and mortarmen assist bricklayers and masons.

The work includes, but is not limited to:

• The mixing, packing, wheeling and tempering of mortar and fire clay.

• The mixing, handling and conveying of all other materials used by bricklayers and masons (e.g., brick, tile, stone and cast stone), whether done by hand or any other process (e.g., operation of forklifts, hoisting equipment and pumping equipment).

• Building of scaffolds, trestles, boxes and swinging staging.

• Hanging of cables and placing of putlogs.

• Carrying bricks and mortar in a hod.

• Cleaning and clearing of all debris.

[Statutory Authority: Chapter 39.12 RCW, RCW 43.22.270 and 43.22.051. 00-15-077, § 296-127-01332, filed 7/19/00, effective 7/19/00.]

WAC 296-127-01333 Heating equipment mechanics. For the purpose of the Washington state public works law, chapter 39.12 RCW, heating equipment mechanics replace the gas and oil burners in furnaces or replace complete furnaces, but they do not install the original furnaces.

The work includes, but is not limited to:

• Removal of old burner.

• Installation of new burner.

• Connection of fuel lines.

• Installation of instrumentation lines.

• Installation of new fan.

• Firing off.

• Setting burner on correct ratio.

• All cleanup required in connection with the installation of heating equipment.

[Statutory Authority: Chapter 39.12 RCW, RCW 43.22.270 and 43.22.051. 00-15-077, § 296-127-01333, filed 7/19/00, effective 7/19/00.]

WAC 296-127-01335 Inland boatmen. For the purpose of the Washington state public works law, chapter 39.12 RCW, inland boatmen man the tugs and launches (but not outboard-powered skiffs) engaged in construction, dredge tending, pile driving, diver tending and geodetic surveying.

[Statutory Authority: Chapter 39.12 RCW, RCW 43.22.270 and 43.22.051. 00-15-077, § 296-127-01335, filed 7/19/00, effective 7/19/00.]

WAC 296-127-01337 Insulation applicators. For the purpose of the Washington state public works law, chapter 39.12 RCW, insulation applicators install all the insulation material in floors, walls, sound rated partitions and ceilings.

They also install insulation materials on roofs, when the material must be measured, cut and nailed to the inside or outside of an existing roofing system.

The insulation materials installed by insulation applicators include, but are not limited to:

• Batt insulation, semi-rigid and rigid insulation, blown spray and foam-type insulation, regardless of method of installation, attachment or connection.

• All the cleanup required in connection with insulation applicators.

[Statutory Authority: Chapter 39.12 RCW, RCW 43.22.270 and 43.22.051. 00-15-077, § 296-127-01337, filed 7/19/00, effective 7/19/00.]

WAC 296-127-01339 Ironworkers. For the purpose of the Washington state public works law, chapter 39.12 RCW, ironworkers perform all work in connection with field fabrication and/or erection, installation, removal, wrecking and dismantling of structural, architectural and reinforcing iron and steel, ornamental lead, bronze, brass, copper and aluminum, and plastics or other materials when used in place thereof.

The work performed by ironworkers includes, but is not limited to:

• Steel and metal houses and packaged buildings.

• Bridges, viaducts, cableways, tramways, monorails.

• Locks, gates, metal forms, railings (including pipe).

• Steel towers, energy producing windmill type towers, nuclear reactors.

• Frames in support of boilers.

• The installation of metal siding and metal roof decking, regardless of the fastening method, or what it is fastened to.

• All reinforcing work in connection with field fabrication, handling, burning, welding and tying of all materials used to reinforce concrete structures.

• The signaling, rigging, hoisting, aligning, bolting, riveting, or welding of structural-steel members.

• The unloading, loading, distributing, stockpiling, hoisting, rigging, and handling of materials used by ironworkers and all cleanup work.

Work process:

(1) Structural:

(a) Erecting:

• Connecting

• Fitting

• Hooking on

• Bolting up

• Torquing

• Signaling

• Preengineered buildings

• Sheeting

(b) Rigging:

• Cranes

• Derricks

• Land rigs

• Cable splicing

(c) Maintenance of equipment:

• Dismantling

• Field rigging

• Moving field equipment

(2) Welding:

(a) Acetylene welding

(b) Electric arc welding

(c) Cutting and burning

(d) Heliarc.

[Statutory Authority: Chapter 39.12 RCW, RCW 43.22.270 and 43.22.051. 00-15-077, § 296-127-01339, filed 7/19/00, effective 7/19/00.]

WAC 296-127-01340 Laborers in utilities construction. For the purpose of the Washington state public works law, chapter 39.12 RCW, the work for laborers includes, but is not limited to:

(1) Pipe layer.

• Shoring, building of manholes and catch basins.

• Sealing, doping and wrapping of the pipe after the joints have been welded and before the pipe is lowered into the trench or ditch.

• Joining ductile iron pipe by using screws, bolts, fittings, caulking or any other method for making joints in the industry, when the pipe will not be under pressure. Lowering the pipe into the trench or ditch.

(2) Topman. Assists the pipe layer from the surface, he does not work in the trench or ditch.

(3) General laborer.

• Performs all other laborers' work which is not done by pipe layers and topmen.

• Responsible for all cleanup required in connection with utilities construction work.

[Statutory Authority: Chapter 39.12 RCW, RCW 43.22.270 and 43.22.051. 00-15-077, § 296-127-01340, filed 7/19/00, effective 7/19/00.]

WAC 296-127-01342 Clean-up laborers. For the intents and purposes of the Washington state public works law, chapter 39.12 RCW, the scope of work for clean-up laborers is as follows:

Performs general cleanup in buildings during construction when too much rubbish has accumulated.

Cleans areas where the next phase of construction will take place.

Performs final cleanup after the construction has been completed.

[Statutory Authority: Chapter 39.12 RCW, RCW 43.22.270 and 43.22.051. 00-15-077, § 296-127-01342, filed 7/19/00, effective 7/19/00.]

WAC 296-127-01344 Laborers. For the intents and purposes of the Washington state public works law, chapter 39.12 RCW, laborers perform a variety of tasks such as:

• Erect and repair guard rails, median rails, guide and reference posts, sign posts and right of way markers along highways.

• Mix, pour and spread asphalt, gravel and other materials, using hand tools, and mix, pour, spread and rod concrete.

• Lift, carry and hold building materials, tools and supplies.

• Measure distances from grade stakes, drive stakes and stretch tight line.

• Bolt, nail, align and block up under forms.

• Signal operators of construction equipment to facilitate alignment, movement and adjustment of machinery to conform to grade specifications.

• Level earth to fine grade specifications, using pick and shovel.

• Mix concrete, using portable mixer.

• Position, join, align, wrap and seal pipe sections.

• The placement and testing of plastic conduit for electrical cable, when the conduit is buried underground.

• Erect scaffolding, shoring and braces.

• Mop, or spread bituminous compounds over surfaces for protection (outside buildings).

• Spray material such as water, sand, steam, vinyl, or stucco through hoses to clean, coat or seal surfaces.

• Apply caulking compounds by hand or with caulking gun to seal crevices.

• The application of penetrating sealer and primer protective coatings to concrete floors and steps when safe to walk on.

• Installation of plastic panels on the inside of existing window frames for insulation (instead of storm windows). The panels are held in place magnetically (with metal brackets) and with self-taping screws.

The cleaning and grinding of concrete floors and walls by high pressure waterblasting or sandblasting preparatory to the application of waterproofing.

• The removing of rough or defective spots from concrete surfaces, using grinder or chisel and hammer and patching holes with fresh concrete or epoxy compound when not preparatory to sacking (finishing a large surface of patched holes).

• The setting of concrete curb, gutter and sidewalk forms as a composite crew with cement masons.

• The laying of concrete, granite and brick pavers in beds of sand.

• General cleanup required after damage caused by water or fire.

All clean-up work required in connection with the above work. Clean tools, equipment, materials and work areas:

(1) When the cleanup is performed for more than one trade (usually employed by general contractor).

(2) When assisting those trades for which laborers have been specifically designated as tenders, e.g., carpenter tender, cement finisher tender, etc.

[Statutory Authority: Chapter 39.12 RCW, RCW 43.22.270 and 43.22.051. 00-15-077, § 296-127-01344, filed 7/19/00, effective 7/19/00.]

WAC 296-127-01346 Landscape construction. For the purposes of the Washington state public works law, chapter 39.12 RCW, landscape construction involves the beautification of a plot of land by changing its natural features through the addition or modification of lawns, trees, bushes, etc.

(1) Landscape construction includes:

• Constructing or maintaining lawns, yards, gardens or other landscaped surfaces.

• Mixing and spreading mulches, ground covers, soil amendments, decorative bark or decorative rock.

• Seeding, sodding or hydroseeding.

• Applying chemicals or fertilizers.

• Planting trees, shrubs or plants.

• Installing, servicing or repairing above ground lawn or landscape sprinkler systems.

• Installing, servicing or repairing underground lawn or landscape sprinkler systems to a maximum depth of three feet below finish grade.

• Assembling or placing premanufactured trellis work, play equipment, benches or picnic tables.

• Constructing rock walls to a maximum height of four feet.

• Land clearing.

• Spreading top soil to a maximum depth of six inches below finish grade.

• Trenching to a maximum depth of three feet below finish grade.

• Installing french drains or other subsurface water collection systems to a maximum depth of three feet below finish grade.

• Hauling top soil, plants or other landscaping materials in trucks with only one rear axle.

(2) Landscape construction does not include:

• Any activity or task (including those mentioned above) when performed preparatory to any nonlandscaping construction work.

• Constructing roads, footpaths, trails or rock walls more than four feet high.

• Custom fabrication of trellis work, play equipment, benches or picnic tables.

• Constructing restrooms, shelters or similar structures.

• Installing sewer systems, storm sewer systems, catch basins, vaults or drainage systems for impervious surfaces (such as parking lots).

• Installing drainage systems or underground sprinkler systems more than three feet below final grade.

• Land clearing, dozing, grading, excavating or hauling except as permitted above.

• Tree falling or bucking.

• Subgrade preparation.

• The use of power equipment with more than ninety horsepower.

• The use of trucks with more than one rear axle except hydroseeders.

• Demolition of structures.

• Asphalt or concrete work except incidental anchorage for play equipment, benches or picnic tables.

• Welding.

• Installing agricultural irrigation systems.

• Encapsulation of landfills.

[Statutory Authority: Chapter 39.12 RCW, RCW 43.22.270 and 43.22.051. 00-15-077, § 296-127-01346, filed 7/19/00, effective 7/19/00.]

WAC 296-127-01347 Lathers. For the purpose of the Washington state public works law, chapter 39.12 RCW, a lather erects horizontal metal framework to which laths are fastened, using nails, bolts, and studgun. Drills holes in floor and ceiling and drives ends of wooden or metal studs into holes to provide anchor for furring or rockboard laths.

Cuts and shapes lath and other materials, using hand tools and power tools.

Nails, clips or fastens all types of wood, wire and metal laths, plasterboard, wallboard, rockboard, gypsum, sheetrock and acoustical materials which take the place of same to walls, ceilings, and partitions of buildings to provide supporting base for plaster, fireproofing or acoustical material.

Erects all metal plastering accessories which are covered and/or serve as ground, guard, stock or screed for plaster materials, including wire mesh.

The work includes, but is not limited to:

• Installs all carrying bars and purlins (pieces of horizontal timber), light iron and metal furring (thin strips of wood or metal to create air space) of all descriptions, such as rods, channels, flatiron, t-bar, h-bar and other ceiling bars or systems for the receipt of lath and board.

• Wires plasterer's channels to overhead structural framework to provide support for plaster or acoustical ceiling tile.

• Nails, plaster grounds (wood or metal strips) to studding to provide a guide for plasters.

• Handles, moves, hoists and stores on the job site all materials used by lathers and does all the cleanup required in connection with lather work.

[Statutory Authority: Chapter 39.12 RCW, RCW 43.22.270 and 43.22.051. 00-15-077, § 296-127-01347, filed 7/19/00, effective 7/19/00.]

WAC 296-127-01349 Marble setters. For the purpose of the Washington state public works law, chapter 39.12 RCW, marble setters cut, trim and set marble slabs in floors and walls of buildings and repair and polish slabs previously set in buildings.

The work includes, but is not limited to:

• Cutting, trimming and facing marble to specified size, using cutting, power sawing, and facing equipment and hand tools.

• Drilling holes in slabs and attaching brackets.

• Spreading mortar on bottom of slabs and on sides of adjacent slabs.

• Setting blocks in position, tamping them into place, and anchoring bracket attachments with wire.

• Filling joints with grout and removing excess grout from marble with a sponge.

• Cleaning and beveling cracks or chips on slabs, using power tools and hand tools.

• Heating cracked or chipped areas with blowtorch and filling defects with composition mastic that matches grain of marble.

• Polishes marble and other ornamental stone to high luster, using power tools or by hand.

[Statutory Authority: Chapter 39.12 RCW, RCW 43.22.270 and 43.22.051. 00-15-077, § 296-127-01349, filed 7/19/00, effective 7/19/00.]

WAC 296-127-01351 Millwrights. For the purpose of the Washington state public works law, chapter 39.12 RCW, millwrights install machinery and equipment according to layout plans, blueprints, and other drawings in industrial establishments, using hoists, lift trucks, hand tools and power tools. They read blueprints and schematic drawings to determine work procedures.

The work includes, but is not limited to:

• Dismantle machines, using hammers, wrenches, crowbars, and other hand held tools.

• Move machinery and equipment, using hoists, dollies, rollers, and trucks.

• Assemble and install equipment, such as shafting, conveyors, and tram rails, using hand tools and power tools.

• Construct foundation for machines, using hand tools and building materials, such as wood, cement, and steel.

• Align machines and equipment, using hoists, jacks, hand tools, squares, rules, micrometers, and plumb bobs.

• Assemble machines and bolt, weld, rivet, or otherwise fasten them to foundation or other structures, using hand tools and power tools.

[Statutory Authority: Chapter 39.12 RCW, RCW 43.22.270 and 43.22.051. 00-15-077, § 296-127-01351, filed 7/19/00, effective 7/19/00.]

WAC 296-127-01352 Metal fabricators. For the purpose of the Washington state public works law, chapter 39.12 RCW, metal fabricators fabricate and assemble structural or ornamental metal products, such as frame work or shells for machinery, tanks, stacks, and metal parts for buildings and bridges.

The work includes, but is not limited to:

• Develop layout and plan sequences of operation.

• Design and construct templates and fixtures.

• Locate and mark bending and cutting lines onto workpiece.

• Operate a variety of machines and equipment to fabricate metal products, such as brakes, saws rolls, shears, flame cutters, drill presses, bending machines, welding machines, and punch and forming presses.

• Set up and operate machine tools associated with fabricating shops, such as radial drill presses, end mills and edge planers, to turn, drill and mill metal to specific dimensions.

• Weld, forge weld, braze, solder, rivet or bolt components together to assemble workpiece.

[Statutory Authority: Chapter 39.12 RCW, RCW 43.22.270 and 43.22.051. 00-15-077, § 296-127-01352, filed 7/19/00, effective 7/19/00.]

WAC 296-127-01354 Operating engineers (equipment operators). For the purpose of the Washington state public works law, chapter 39.12 RCW, operating engineers operate, repair and maintain all types of self-propelled mechanically, electrically, electronically, hydraulic, automatic or remote controlled equipment on construction projects.

The work includes, but is not limited to, the following types of construction and equipment:

(1) Type of construction.

(a) Heavy and highway.

• Roads, streets, highways, grading and paving, excavation of earth and rock, viaducts, bridges, abutments, retaining walls, alleys, sidewalks, guard rails, fences, parkways, parking areas, athletic fields, railroads, airport grading, surfacing and drainage, pile driving, water supply, water development, reclamation, irrigation, drainage and flood control projects, water mains, pipe lines, sanitation and sewer projects, all common ditches, dams, aqueducts, canals, reservoirs, intakes, channels, levees, dikes, revetments, jetties, quarrying of breakwater or riprap stone, foundations pile driving piers, docks, locks, river and harbor projects, breakwaters, dredging, channel-cutoffs, duct lines, subways, shafts, tunnels, drilling, soil testing, clearing and grubbing, land leveling, quarrying, demolition and site clearing, tramways, soil stabilization, landscaping, beautification projects, hoisting or related work done by helicopters.

• Oil or gas refineries, nuclear power plants, industrial complexes and incidental structures.

• It shall also include any work relating to off-shore drilling and pipe lines.

(b) Building.

• Construction, erection, alteration, repair, modification, demolition, addition or improvement, in whole or in part, of any building structure.

• It shall include the installation, operation, maintenance and repair of equipment, and other facilities used in connection with the performance of such building construction.

(c) Material supply. Operations such as quarries, sand and gravel plants, screening plants, asphalt plants, ready-mix concrete or batch plants and prestressed concrete plants (excluding established plants) that are established at the job site.

(2) Type of equipment.

(a) Self-propelled.

• Asphalt machines, backhoes, blades, boring equipment, brooms, chippers, compactors, compressors, concrete saws, cranes, derricks, dozers, drilling equipment, hoists, lifts, loaders, motor graders, pavement breakers, paving machines, pumps, rollers, scrapers, screeds, shovels, tractors, and trenchers.

(b) Stationary.

• Asphalt plants, concrete batch plants, crushing plants, and screening plants.

[Statutory Authority: Chapter 39.12 RCW, RCW 43.22.270 and 43.22.051. 00-15-077, § 296-127-01354, filed 7/19/00, effective 7/19/00.]

WAC 296-127-01356 Painters. For the intents and purposes of the Washington state public works law, chapter 39.12 RCW, the job description for painters is as follows:

(1) Preparation of surfaces.

(a) Washing, cleaning and smoothing of surfaces, using sandpaper, brushes or steel wool.

(b) Removal of old paint or other coatings from surfaces, using paint remover, scraper, wire brush or by sandblasting.

(c) Filling of nail holes, cracks and joints with putty, plaster or other fillers.

(2) Color matching and mixing.

(3) Application of paint, varnish, stain, enamel, lacquer, vinyl, wallpaper and other materials of whatever kind or quality applied to walls or ceilings with paste or adhesive using brushes, spray gun or paint rollers.

(4) Application of polyurethane elastomers, vinyl plastics, neoprene, resin, polyester and epoxy as waterproofing or protective coatings to any kind of surfaces (except roofs) when applied with brushes, spray guns or rollers.

(5) Application of sprayed on fire retardant foam.

(6) Texturing and decorating.

(7) Erecting of scaffolding or setting up of ladders to perform the work above ground level.

(8) Responsible for all the cleanup required in connection with painters work.

[Statutory Authority: Chapter 39.12 RCW, RCW 43.22.270 and 43.22.051. 00-15-077, § 296-127-01356, filed 7/19/00, effective 7/19/00.]

WAC 296-127-01358 Pile drivers. For the purpose of the Washington state public works law, chapter 39.12 RCW, the work of a pile driver includes, but is not limited to:

Pile driver (pile buck).

• The preparation, aligning, plumbing, setting, stressing, testing, pulling, welding, cutting off and capping of piling of any type including steel pile and concrete pile and the splicing, barking, heading and shoeing of piling and the rigging and signaling connected with all of the above.

• Operating engineer pile driver.

• Operating any power equipment used for pile driving, such as cranes equipped with drophammers and drums and hoists on A-frame type fixed leads on floating rigs.

[Statutory Authority: Chapter 39.12 RCW, RCW 43.22.270 and 43.22.051. 00-15-077, § 296-127-01358, filed 7/19/00, effective 7/19/00.]

WAC 296-127-01360 Plasterers. For the purpose of the Washington state public works law, chapter 39.12 RCW, plasterers apply gypsum, portland cement, stucco, imitation stone, and kindred materials and products to interior walls, ceilings, and partitions and to exterior walls of buildings, and finish those materials and products.

The work includes, but is not limited to:

• The spreading of plaster over laths, masonry, or any other base, using trowel and smoothing the plaster with darby and float for uniform thickness.

• The application of all the various manufacturer's brand names of "thin coat" or "plaster veneer."

• The application of all bonding agents and mastical.

• Roughing of undercoat with wire or metal scraper to provide bond for succeeding coats of plaster.

• The application of all malleable plastic materials and apoxy materials.

• The setting in place of plasterboard, insulationboard, "styro-foam and bead-board," ground, locks, patent dots, cork plates, brownstone and acoustical tile, fiberglass reinforcement and finished products.

• The plastering of joints, nail holes, and bruises on wallboard.

• The grouting and filling of door bucks, runners and similar installations.

• The application of scratchcoat, browncoat, and finishcoat of plaster to wood, metal, or board laths successively to all ceilings and walls when finished with terrazzo or tile, and the application of any plastic material to same.

• The fireproofing of all building assemblies with plaster materials, sprayed fiberglass or similar materials, whether applied to gypsum, metal lath or directly.

• All waterproofing work, such as the cutting and placing of nylon mesh and the plastering and finish of all exterior wall insulation and plaster finish systems.

• The application of crushed stone, marble or ceramic chips and broken glass where embedded in plaster, cement, plastic, or similar materials.

• The placing of acoustic blocks with any plastic material, regardless of thickness.

• The placing, by any method, of plaster or composition caps and ornaments.

• Creating decorative textures in finish coat by marking surface of coat with brush and trowel or by spattering it with small stones ("stucco") where plastering equipment and/or materials are used.

• The operation and control of all types of plastering machines, including power trowels and floats.

• All clean-up work.

[Statutory Authority: Chapter 39.12 RCW, RCW 43.22.270 and 43.22.051. 00-15-077, § 296-127-01360, filed 7/19/00, effective 7/19/00.]

WAC 296-127-01362 Playground and park equipment installers. For the intents and purposes of the Washington state public works law, chapter 39.12 RCW, the job description for playground and park equipment installers is as follows:

• Construction and placement of play equipment, benches and picnic tables in school grounds and parks.

• Responsible for all the cleanup required in connection with installation of playground and park equipment.

[Statutory Authority: Chapter 39.12 RCW, RCW 43.22.270 and 43.22.051. 00-15-077, § 296-127-01362, filed 7/19/00, effective 7/19/00.]

WAC 296-127-01364 Plumbers, pipefitters, and steamfitters. For the purpose of the Washington state public works law, chapter 39.12 RCW, plumbers, pipefitters and steamfitters assemble, install, and maintain piping systems, fixtures and equipment for the transportation of water, steam, gas, air, sewage, oil, fuels, liquids, gases, or similar substances.

The work includes, but is not limited to:

(1) Piping systems installed in structures (e.g., buildings, industrial plants, etc.).

(a) The handling and moving of any plumbing, pipefitting and steamfitting materials, supplies, and equipment on the job site.

(b) Cutting, threading, and bending pipe.

(c) Joining pipes by use of screws, bolts, fittings, solder, welding and caulking, or any other method of making joints in the pipefitting industry.

(d) Assembling, installing, and repairing valves, pipe fittings, and pumps.

(e) Testing the piping system.

(f) Installing and repairing plumbing fixtures, such as sinks, bathtubs, water heaters, and water softeners.

(g) Cutting holes in floors and walls for pipes:

• With point and hammer.

• Core-drilled.

(h) Responsible for all cleanup required in connection with plumbers, pipefitters and steamfitters work.

(2) Distribution lines (e.g., water mains, sewer mains, oil and gas lines, etc.).

(a) The handling and moving of any plumbing, pipefitting and steamfitting materials, supplies, and equipment on the job site.

(b) Steel pipe: Welding of pipe joints and joining pipes with screws, bolts, fittings, solder, caulking, or any other method for making joints in the industry.

(c) Ductile iron pipe: Joining pipes by using any method for making joints in the industry, when the pipe will be under pressure.

Assembling, installing, and repairing valves and pumps.

(d) Testing the piping system.

(e) Responsible for all cleanup required in connection with plumbers, pipefitters and steamfitters work.

[Statutory Authority: Chapter 39.12 RCW, RCW 43.22.270 and 43.22.051. 00-15-077, § 296-127-01364, filed 7/19/00, effective 7/19/00.]

WAC 296-127-01367 Refrigeration mechanic. For the purpose of Washington state public works law, chapter 39.12 RCW, refrigeration mechanics install industrial, commercial, residential, and marine refrigeration systems involved in cold storage, ice making, cooling, heating, air conditioning, humidifying, dehumidifying or dehydrating and charge (pump gas or fluid in the system), start, test, service, and repair the installed systems.

The work includes, but is not limited to:

• Lay out reference points for the installation of the structural and functional components, using tape, transit, plumb bob, level, and square.

• Lay out and drill holes and cut chases and channels, set and erect belts, inserts, stands, brackets, hangers, supports, sleeves, thimbles, conduits and hoses.

• Lay out, cut, thread, bend and connect pipe to functional components and water or power system of premises.

• Move, lift, and install all compressors, pumps, motors, controls, switches, gauges, valves, condensers, evaporators, and other fixtures and appurtenances included in such systems.

• Bolt, rivet, weld, braze and solder parts to structural and functional components.

• All clean-up work required in connection with refrigeration mechanics' work.

• Excluded is the installation of sheet metal duct work leading to and/or from units described above.

[Statutory Authority: Chapter 39.12 RCW, RCW 43.22.270 and 43.22.051. 00-15-077, § 296-127-01367, filed 7/19/00, effective 7/19/00.]

WAC 296-127-01369 Remote controlled cleaning, inspection and sealing of underground sewer and water systems. For the purpose of the Washington state public works law, chapter 39.12 RCW, this special method of repairing in-place, underground sewer and water pipes, includes the following work:

• Cleaning of interior pipe surface.

• Closed circuit television inspection.

• Electronic air testing of joints, cracks and breaks.

• Internal sealing of joints, cracks and breaks with chemical grout.

• All the above functions must be performed by remote control.

[Statutory Authority: Chapter 39.12 RCW, RCW 43.22.270 and 43.22.051. 00-15-077, § 296-127-01369, filed 7/19/00, effective 7/19/00.]

WAC 296-127-01370 Roofers. For the purpose of the Washington state public works law, chapter 39.12 RCW, roofers apply and install any and all types of roofing materials, other than sheet metal. The work of roofers includes, but is not limited to:

(1) The installation of slate and tile and all substitute materials taking the place of slate and tile, with necessary metal flashing to make water-tight.

All cementing in, on or around slate and tile roofs.

All laying of felt or paper beneath the slate and tile.

All dressing, punching and cutting of all roof slate or tile either by hand or machinery.

(2) The installation of all forms of plastic, slate, slag, gravel; asphalt and composition roofing; rock asphalt mastic when used for damp and waterproofing; prepared paper; compressed paper, and chemically prepared paper with or without coating.

The installation of all damp resisting preparations when applied on roofs with mop, three-knot brush, roller, swab or spray system.

(3) The installation of all forms of elastomeric and/or plastic (elasto-plastic) roofing systems, both sheet and liquid applied, whether single-ply or multi-ply.

All types of aggregates, blocks, bricks or stones used to ballast these elasto-plastic systems.

All types of aggregates used as a ballast for inverted roofing membrane assembly, or roof of similar construction where the insulation is laid over the roofing membrane.

All sealing and caulking of seams and joints on these elasto-plastic systems to insure water-tightness.

All liquid-type elasto-plastic preparation for roofing, damp or waterproofing when applied with a squeegee, trowel, roller or spray equipment.

All sheet-type elasto-plastic systems, whether single or multi-ply, for waterproofing.

All priming of surfaces to be roofed, damp or waterproofed, whether done by roller, mop, swab, three-knot brush, or spray systems.

All types of preformed panels used in waterproofing.

(4) The application of all types of spray-in-place foams such as urethane or polyurethane, and the coatings that are applied over them.

(5) The application of roof insulation, when the insulation material is applied as an integral part of the roofing system, whether the insulation material is applied as the first, last or any other layer in between.

(6) The handling, hoisting and storing of all roofing, damp and waterproofing materials.

(7) The tear-off and/or removal of any type of roofing, including roofing materials containing asbestos, all spudding, sweeping, vacuuming and/or cleanup of any and all areas of any type where a roof is to be relayed, and all other cleanup required in connection with roofing work.

[Statutory Authority: Chapter 39.12 RCW, RCW 43.22.270 and 43.22.051. 00-15-077, § 296-127-01370, filed 7/19/00, effective 7/19/00.]

WAC 296-127-01372 Sheet metal workers. For the purpose of the Washington state public works law, chapter 39.12 RCW, sheet metal workers perform the following work:

(1) The handling, conditioning, assembling, installing, servicing, repairing, altering and dismantling of the duct work for the heating, ventilation and air conditioning systems regardless of the materials used and the setting and the servicing of all equipment and all supports and reinforcements in connection therewith.

(2) The installation of expansion and discharge valves, air filters, and water filters in heating, ventilation and air conditioning systems.

(3) The testing and balancing of air-handling equipment and duct work.

(4) The handling, conditioning, assembling, installing, repairing and dismantling (except when a building is demolished) of cornices, gutters and down spouts.

(5) The installation of metal siding and metal roof decking, regardless of the fastening method, or what it is fastened to.

(6) The installation of furnaces and any and all sheet metal work in connection with or incidental to commercial kitchen equipment or refrigerating plants.

(7) The handling, moving, hoisting and storing of all sheet metal materials on the job site and all the cleanup required in connection with sheet metal work.

[Statutory Authority: Chapter 39.12 RCW, RCW 43.22.270 and 43.22.051. 00-15-077, § 296-127-01372, filed 7/19/00, effective 7/19/00.]

WAC 296-127-01374 Sign makers and sign installers. For the purpose of the Washington state public works law, chapter 39.12 RCW, sign makers and sign installers fabricate, install, repair, alter, maintain and dismantle commercial signs, bulletins and poster panels.

The work includes, but is not limited to:

(1) Electric and luminous tube signs.

• The manufacture of all luminous tubes, which includes the coating and processing of tubes and the bending, repairing and pumping for all tubes.

• The shop assembly and fabrication of signs and displays and the installation, alteration, repair and dismantling of all electric and neon sign displays.

• The wiring, assembly, service and electrical maintenance of all such displays.

• The installation and servicing of fluorescent lighting fixtures.

(2) Painted and photographed signs.

• The preparing of sign surfaces, patterns and layouts.

• Applying all decals.

• Preparing and pouncing of patterns and tracing all patterns.

• Designing, cutting out of all letters made of wood or like materials, such as plastic, masonite, wallboard, cardboard.

• Priming, finishing and gilding of letters.

• Use of stencil knife, perforating wheel and friskit cutting.

• Applying and/or hanging of all cut-out letters.

• All pictorial work on signs, screen process work in its entirety including photography and operation of projector and mimeograph.

• Erecting commercial signs, bulletins and poster panels.

• Repainting of all signs, including painting of capping on bulletins and poster panels, by spraying and use of rollers.

• All work on banners, cloth, plastic, paper and cardboard, walls, bulletins, windows, truck lettering and all lettering on any surface.

• The use of stencil knife on sandblasted signs.

• The layout and application of all vinyl letters.

(3) All the cleanup required in connection with sign making and installing.

[Statutory Authority: Chapter 39.12 RCW, RCW 43.22.270 and 43.22.051. 00-15-077, § 296-127-01374, filed 7/19/00, effective 7/19/00.]

WAC 296-127-01375 Sprinkler fitters. For the purpose of the Washington state public works law, chapter 39.12 RCW, sprinkler fitters perform the installation, adjustments and corrections, maintenance, repair and dismantling of all fire protection and fire control systems and the installation of all piping for tubing, appurtenances and equipment pertaining thereto.

The work includes, but is not limited to:

(1) Underground water mains, fire hydrants and hydrant mains, stand pipes and hose connections to sprinkler systems and overhead piping.

(2) Sprinkler tank heaters.

(3) Air lines and thermal systems used in connection with sprinkler and alarm systems and all tanks and pumps connected thereto.

(4) Co^2 and cardox systems, dry chemical systems, halon and foam systems and all other fire protection systems.

(5) Cutting holes in floors and walls for pipes:

• With point and hammer.

• Core-drilled.

(6) The unloading, handling and storing of all the above.

(7) All clean-up work.

Excluded are steam fire protection systems and stand pipes not connected to automatic sprinkler systems.

[Statutory Authority: Chapter 39.12 RCW, RCW 43.22.270 and 43.22.051. 00-15-077, § 296-127-01375, filed 7/19/00, effective 7/19/00.]

WAC 296-127-01376 Stone masons. For the purpose of the Washington state public works law, chapter 39.12 RCW, stone masons shape and set stone blocks to build stone structures, such as piers, walls and abutments, and lay walks, curbstones, or special types of masonry, such as alberene (acid-resistant soapstone) for vats, tanks, and floors, using mason's tools.

The work includes, but is not limited to:

• Shaping stone blocks preparatory to setting, using chisel, hammer, and other shaping tools.

• Spreading mortar over stone and foundation with trowel and setting stone in place by hand or with the aid of a crane.

• Aligning stone with plumbline and finishing joints between stone with a pointing trowel.

• Spreading mortar along mortar guides to insure joints of uniform thickness.

• Cleaning surface of finished structure and removing mortar, using muriatic acid and brush.

[Statutory Authority: Chapter 39.12 RCW, RCW 43.22.270 and 43.22.051. 00-15-077, § 296-127-01376, filed 7/19/00, effective 7/19/00.]

WAC 296-127-01377 Outside telephone line construction. For the purpose of the Washington state public works law, chapter 39.12 RCW, outside telephone line construction includes, but is not limited to, the following work:

(1) Head groundman. Operates light equipment and drives vehicles.

(2) Telephone equipment operator - light. Operates backhoes, trenching machines and small cable plows.

(3) Telephone equipment operator - heavy. Operates bulldozers, trenchers, backhoes, cable plows and plows pulling other equipment.

Note: This scope of work description does not apply to the compaction and resurfacing of trenches or ditches associated with asphalt and other road repair and replacement.

[Statutory Authority: Chapter 39.12 RCW. 04-16-094, § 296-127-01377, filed 8/3/04, effective 9/15/04. Statutory Authority: Chapter 39.12 RCW, RCW 43.22.270 and 43.22.051. 00-15-077, § 296-127-01377, filed 7/19/00, effective 7/19/00.]

WAC 296-127-01378 Telecommunication technicians. For the purpose of the Washington state public works law, chapter 39.12 RCW, telecommunications technicians install, inspect, maintain, repair and service telecommunication systems.

The work includes, but is not limited to:

(1) Main distribution frame (MDF). The distribution frame where the permanent outside lines entering a building terminate and the subscriber's line multiple cabling and truck multiple cabling originate. It is usually located on the ground floor of a building.

(2) Intermediate distribution frames (IDF). Distribution frames which provide flexibility in allocating the subscriber's number to the line or equipment in the office which is to be associated with the particular line. These frames are located on each floor of a building.

(3) Blocks. Subpanels. They are connecting devices where large feed cables terminate at the distribution frames.

(4) Common equipment or key service unit. Consists of a backboard assembly, an equipment mounting frame, for connecting external telephones and Pacific Northwest Bell lines.

(5) Instruments, terminals, sets. Communications equipment at either end of a circuit. Equipment at a subscriber's or user's terminal including such items as telephones.

(6) Ancillary equipment. Add-on equipment such as bells, buzzers, speakerphones, headsets, automatic dialers, recorders, etc.

(7) Telephone cable.

(a) Network channel service cable owned by the telephone companies.

(b) Riser cables between floors of a building.

(c) Distribution cables installed on each floor of a building in the floor or the ceiling.

(d) Inside wires between the telephone and the connection to the distribution cable.

[Statutory Authority: Chapter 39.12 RCW, RCW 43.22.270 and 43.22.051. 00-15-077, § 296-127-01378, filed 7/19/00, effective 7/19/00.]

WAC 296-127-01379 Terrazzo (artificial marble) workers. For the purpose of the Washington state public works law, chapter 39.12 RCW, terrazzo workers create durable and decorative surfaces on floors, walls and ceilings.

The work includes, but is not limited to:

(1) Spreading a one-half inch mixture of sand, cement, and water with trowel to form a base over walls, ceilings, and concrete floors where terrazzo is to be applied.

(2) The cutting and setting of metal or wooden strips into the terrazzo base so that the top edges form a design or pattern and define the level of the finished floor surface.

(3) Spreading a mixture of cement terrazzo, magnasite terrazzo, polyacrylate terrazzo, epoxy matrix terrazzo, exposed aggregate, rustic or rough washed for the interior or exterior of buildings, over a terrazzo base with float and trowel to form the finished surface.

(4) Spreading of any other kind of mixture of plastics composed of chips or granules of marble, granite, blue stone, enamel, mother-of-pearl, quartz, ceramic colored quartz and all other kinds of chips or granules when mixed with cement, rubber, neoprene, vinyl, magnesium, chloride or any other resinous or chemical substances used for seamless flooring

systems, and all other binding materials when used on any part of the interior and exterior of buildings and on fountains, swimming pools, etc.

[Statutory Authority: Chapter 39.12 RCW, RCW 43.22.270 and 43.22.051. 00-15-077, § 296-127-01379, filed 7/19/00, effective 7/19/00.]

WAC 296-127-01382 Terrazzo workers' helpers, tile and marble setters' helpers (finishers). For the purpose of the Washington state public works law, chapter 39.12 RCW, the scope of work for terrazzo workers' helpers, tile and marble setters' helpers includes, but is not limited to:

• Handling, moving, hoisting, storing and distributing sand, mortar, cement, lime, terrazzo, tile, marble, stone, slate or any other materials that may be used by terrazzo workers, tile layers, marble setters and stone masons.

• Performing all rigging.

• Installing and dismantling of scaffolding or staging.

• Mixing mortar and grout.

• All preparation prior to installation, such as helping with the bedding and cutting, priming, and the installation of ties and wire lath.

• Grinding, cleaning, washing, rubbing and polishing of all tile and marble.

• Applying protective coverings, such as soap compounds, paper products, varnishes and lacquers and all types of tapes and polyethylene coverings.

• Cleanup of the job site.

[Statutory Authority: Chapter 39.12 RCW, RCW 43.22.270 and 43.22.051. 00-15-077, § 296-127-01382, filed 7/19/00, effective 7/19/00.]

WAC 296-127-01384 Tile setters. For the purpose of the Washington state public works law, chapter 39.12 RCW, tile setters apply tile to floors, walls, ceilings, stair treads, promenade roof decks, garden walks, swimming pools, and all places where tiles may be used to form a finished surface for practical use, sanitary finish or decorative purpose.

The tile is defined as all burned clay products, as used in the tile industry, either glazed or unglazed, and all composition materials and all substitute materials in single units up to and including 15" x 20" x 2" (except quarry tiles larger than 9" x 1 1/4"), and all mixtures in the form of cement, plastics and metals that are used as a finished surface.

The work includes, but is not limited to:

• Measuring and cutting metal lath to size for walls and ceilings with tin snips. Tacking lath to wall and ceiling surfaces with staple gun or hammer. Spreading plaster base over lath with trowel and leveling plaster to specified thickness, using screed.

• Spreading concrete on subfloors with trowel and leveling it with screed.

• Spreading mastic or other adhesive base on roof deck, using serrated spreader to form base for promenade tile.

• Cutting and shaping tile with tile cutters and biters.

• Positioning tile and tapping it with trowel handle to affix tile to plaster or adhesive base.

[Statutory Authority: Chapter 39.12 RCW, RCW 43.22.270 and 43.22.051. 00-15-077, § 296-127-01384, filed 7/19/00, effective 7/19/00.]

WAC 296-127-01386 Traffic control stripers. For intents and purposes of the Washington state public works law, chapter 39.12 RCW, the scope of work for traffic control stripers is as follows:

(1) All painting, application and installing of lines, arrows, bumpers, curbs, etc., on parking lots, air fields, highways, game courts and other such surfaces.

(2) The handling, painting and installing of all car stops, stop signs and any other type sign installed for the purpose of regulating traffic on such surfaces.

(3) The installation of plastic, metal or composition button, or lines used instead of paint.

(4) Installation of parking gates, ticket spitters and other similar mechanical and automatic control devices.

(5) Seal coating, slurry coating and other surface protection.

(6) Line removal; chemical sand and hydro-blast, paint and button.

(7) Installation of guard rail and posts and similar protective devices.

(8) Manufacturing and installation of all car stops, per example: Metal, wood, concrete, plastic, etc., and all similar traffic regulators.

(9) Manufacturing, painting, stenciling, servicing, repairing, placing and removal of traffic safety and control devices (barricades).

(10) The preparation and maintenance of all surfaces as outlined above.

(11) Responsible for all the cleanup required in connection with traffic control stripers work.

[Statutory Authority: Chapter 39.12 RCW, RCW 43.22.270 and 43.22.051. 00-15-077, § 296-127-01386, filed 7/19/00, effective 7/19/00.]

WAC 296-127-01387 Power line clearance tree trimming. For the purpose of the Washington state public works law, chapter 39.12 RCW, the scope of work for power line clearance tree trimmers, chippermen and power line clearance tree trimmer apprentices is as follows:

(1) Power line clearance tree trimmer.

• Trims trees to clean right of way for electrical power lines to minimize storm and short-circuit hazards.

• Climbs trees to reach branches interfering with wires and transmission towers, using climbing equipment, or may work from bucket of extended truck boom to reach limbs.

• Prunes treetops, limbs and branches, using saws or pruning shears.

• Falls trees interfering with power service, using chainsaw.

• Repairs trees damaged by storms or lighting, by trimming jagged stumps and painting them to prevent bleeding of sap.

• Removes broken limbs from wires, using hooked extension pole.

(2) Chipperman.

• Assists tree trimmer in clearing trees, branches and brush interfering with electrical power lines. He performs all this work on the ground.

• Hoists tools and equipment to tree trimmers and lowers tree tops, limbs and branches with rope or block and tackle. Positions and steadies ladders. Operates the wood chipper (turns on and off). Saws and chops up tree trunks, tree tops, limbs, branches, and brush and leads them into the chipper. Drives the truck which tows the chipper.

• This classification is being phased out. To be used only for employees hired as "chippermen" prior to July 1, 1985.

(3) Power line clearance tree trimmer apprentice.

• Assist tree trimmer in clearing trees, branches and brush interfering with electrical power lines. He performs all his work on the ground.

• Hoists tools and equipment to tree trimmer and lowers tree tops, limbs and branches with rope of block and tackle. Positions and steadies ladders. Operates the wood chipper (turns it on and off). Saws and chips up tree trunks, tree tops, limbs, branches, and brush and feeds them into the chipper. Drives the truck which tows the chipper.

• Drags tree trunks, limbs, branches, and brush to the chipper, when the chipper is stationed a considerable distance from the location where the tree trimming is done.

[Statutory Authority: Chapter 39.12 RCW, RCW 43.22.270 and 43.22.051. 00-15-077, § 296-127-01387, filed 7/19/00, effective 7/19/00.]

WAC 296-127-01389 Utilities construction (underground sewers and water lines). For the purpose of the Washington state public works law, chapter 39.12 RCW, utilities construction is defined as follows:

The construction, alteration, repair or improvement of water mains, sanitary sewer mains, underground storm sewers and branch lines to buildings but not underneath buildings, within cities, towns, suburbs and subdivisions. The work includes, but is not limited to:

(1) Clearance of right of way preparatory to the excavation of trenches or ditches.

(2) Excavation and trimming of trenches or ditches (including establishing and maintaining grade).

(3) Shoring, building of manholes, catch basins, etc.

(4) Distribution of pipe and skids, placing of skids and pipe over the trench or ditch.

(5) The cleaning, sealing, doping and wrapping of the pipe after the joints have been welded and before lowering the pipe into the trench and alignment.

(6) Lowering of the pipe and the removal of the skids.

(7) Backfilling, compaction and resurfacing of trenches or ditches (e.g., asphalt work necessary to cover the trench or ditch, but all other asphalt work is excluded).

(8) Cleanup and restoration of right of way (e.g., restore landscaping).

[Statutory Authority: Chapter 39.12 RCW, RCW 43.22.270 and 43.22.051. 00-15-077, § 296-127-01389, filed 7/19/00, effective 7/19/00.]

WAC 296-127-01391 Water well drillers, exploration drillers, water well pump installers, and equipment oilers. For the purpose of the Washington state public works law, chapter 39.12 RCW, the work of water well drillers, exploration drillers, water well pump installers, and equipment oilers includes, but is not limited to:

(1) Water well drillers. The drilling of wells for:

(a) Commercial water supplies.

(b) Irrigation water supplies.

(c) Water supplies for any other purpose.

(d) Dewatering, or similar purposes.

(2) Exploration drillers.

(a) Hole drilling for geologic or hydrologic information.

(b) Core drilling for geologic information.

(3) Water well pump installers. The installation of water well pumps for all purposes, except commercial water supplies.

(4) Equipment oilers. Assist the drillers and pump installers in the performance of the tasks described above.

[Statutory Authority: Chapter 39.12 RCW, RCW 43.22.270 and 43.22.051. 00-15-077, § 296-127-01391, filed 7/19/00, effective 7/19/00.]

WAC 296-127-014 Usual benefits. (1) Employers are not required to establish "usual benefit" programs. If an employer chooses not to provide such benefits, however, wages paid must be at the full prevailing wage rate as defined by RCW 39.12.010.

(2) To be deemed a "usual benefit," the following requirements must be satisfied:

(a) Employer payments for the usual benefit shall be made only in conformance with all applicable federal and state laws, including the requirements of the Employment Retirement Income Security Act of 1974, as amended, and of the Internal Revenue Service; and

(b) Employee payments toward the usual benefit, through self-contribution, payroll deduction, or otherwise, shall not constitute a credit to the employer for prevailing wage purposes.

(3) "Usual benefits" are limited to the following:

(a) Health and welfare payments. This is medical insurance, which may include dental, vision, and life insurance. Insurance programs providing protection against industrial accidents or occupational illnesses which are mandated by state or federal statutes, and all related mandatory forms of protection, shall not qualify as health and welfare insurance.

(b) Employer payments on behalf of a person employed for the purpose of providing retirement income.

(c) Vacation payments made either directly to the employees or into a vacation fund, provided these benefits are paid to the employees.

(d) Apprentice training fund. Payments made to training programs approved or recognized by the Washington state apprenticeship and training council.

(e) Paid holidays. Payments made to employees for specified holidays.

(4) Any fringe benefits required by other local, state, or federal laws do not qualify as "usual benefits."

[Statutory Authority: Chapters 39.04 and 39.12 RCW and RCW 43.22.270. 92-01-104, § 296-127-014, filed 12/18/91, effective 1/31/92; 88-22-046 (Order 88-22), § 296-127-014, filed 10/31/88.]

WAC 296-127-01410 Information concerning prevailing wage usual benefits. (1) Contractors and employers shall conform to all posting and employee notification requirements provided by applicable federal and state laws concerning usual benefits plans.

(2) Contractors and employers must have, and make available to the department upon request, copies of all documents concerning usual benefits, as identified in WAC 296-127-014, for which employer payments are made.

[Statutory Authority: Chapters 39.04 and 39.12 RCW and RCW 43.22.270. 92-01-104, § 296-127-01410, filed 12/18/91, effective 1/31/92.]

WAC 296-127-015 Applicability of prevailing wages for supervisors. Determinations as to whether individuals

are workers, laborers, or mechanics are based on the scope of work actually performed by the individuals, rather than the title of their occupations.

(1) Where additional supervisory duties are required of workers, laborers, or mechanics by statute or regulation, the industrial statistician shall establish a rate of pay for a work classification to be called "journey level in charge." These rates shall be published in the semiannual prevailing wage publication.

(2) Supervisors (e.g., foremen, general foremen, superintendents, etc.,) are entitled to receive at least the journey level prevailing rate of wage for performing manual or physical labor:

(a) For each hour spent in the performance of manual or physical labor if it is for more than twenty percent but less than fifty percent of their hours worked on a public works project during any given week.

(b) For all hours worked in any given week if they perform manual or physical labor for fifty percent or more of their hours worked on a public works project during such week.

(3) If supervisors subject to the journey level prevailing wage rate are paid a salary, the compensation (salary divided by number of hours worked) must be equal to or greater than the prevailing wage rate for the type of work performed.

[Statutory Authority: Chapters 39.04 and 39.12 RCW and RCW 43.22.270. 92-01-104, § 296-127-015, filed 12/18/91, effective 1/31/92; 88-22-046 (Order 88-22), § 296-127-015, filed 10/31/88.]

WAC 296-127-017 Notice of wage determinations. Current prevailing wage data will be furnished by the office of the industrial statistician upon request.

[Statutory Authority: Chapters 39.04 and 39.12 RCW and RCW 43.22.270. 92-01-104, § 296-127-017, filed 12/18/91, effective 1/31/92. Statutory Authority: RCW 39.12.015, 39.12.060 and HB 795, 1982 1st ex.s. c 38. 82-18-041 (Order 82-28), § 296-127-017, filed 8/27/82.]

WAC 296-127-018 Coverage and exemptions of workers involved in the production and delivery of gravel, concrete, asphalt, or similar materials. The materials covered under this section are sand, gravel, crushed rock, concrete mix, asphalt, or other similar materials.

(1) Workers are subject to the provisions of chapter 39.12 RCW when they are employed by a contractor as defined by WAC 296-127-010 (5)(c) and:

(a) They are engaged for a public works project in the production of the above-listed materials in a sand or gravel pit, rock quarry, concrete mixing plant, or other similar facility; or

(b) They are engaged in the transportation of the above-listed materials for use on a public works project, whether or not they perform any work on the project site.

(2) All workers, regardless of by whom employed, are subject to the provisions of chapter 39.12 RCW when:

(a) They deliver any of the above-listed materials to a public works project site and perform any spreading, leveling, rolling, or otherwise participate in any incorporation of the materials into the project; or

(b) They wait at or near a public works project site to participate in the incorporation of any of the above-listed materials into the project; or

(c) They remove any materials from a public works construction site pursuant to contract requirements or specifications (e.g., excavated materials, materials from demolished structures, clean-up materials, etc.); or

(d) They work in a materials production facility (e.g., batch plant, borrow pit, rock quarry, etc.,) which is established for a public works project for the specific, but not necessarily exclusive, purpose of supplying materials for the project.

(3) Workers are not subject to the provisions of chapter 39.12 RCW when:

(a) The employees' duties do not include spreading, leveling, rolling, or otherwise participating in the incorporation of the delivered materials into a public works project, and they are employed by an established materials supplier either in the production or delivery of sand, gravel, crushed rock, concrete mix, asphalt or other similar materials;

(b) They are employed by a common or contract carrier trucking company principally or exclusively engaged in the hauling or delivery of such products, and the employees' duties do not include spreading, leveling, rolling, or otherwise participating in the incorporation of the delivered materials into a public works project; or

(c) Their employer is engaged in the production and stockpiling of such materials for unspecified future use by the state of Washington or by municipalities as defined by RCW 39.04.010.

(4) The applicable prevailing wage rate shall be determined by the locality in which the work is performed. Workers subject to the provisions of chapter 39.12 RCW, as outlined in subsection (1) of this section, who produce such materials at an off-site facility shall be paid the applicable prevailing wage rates for the county in which the off-site facility is located. Workers subject to the provisions of chapter 39.12 RCW, as outlined in subsection (1) of this section, who deliver such materials to a public works project site shall be paid the applicable prevailing wage rates for the county in which the public works project is located.

[Statutory Authority: Chapters 39.04 and 39.12 RCW and RCW 43.22.270. 92-01-104 and 92-08-101, § 296-127-018, filed 12/18/91 and 4/1/92, effective 8/31/92.]

WAC 296-127-019 Survey methodology. (1) The industrial statistician shall establish prevailing wage rates by:

(a) Conducting wage and hour surveys for established trades and occupations;

(b) Adopting the wage and benefit adjustments established in collective bargaining agreements for those trades or occupations where the most recently established prevailing wage rates were derived from a collective bargaining agreement; and/or

(c) In instances when the procedures established in (a) and (b) of this subsection are not feasible, employing other methods deemed appropriate by the industrial statistician as set out in subsection (8) of this section.

(2) The department will determine the identity of employers to be surveyed for a specific trade or occupation by:

(a) Mailing trade and occupation questionnaires to all contractors whose registration under chapter 18.27 RCW or license under chapter 19.28 RCW is active;

(b) Mailing trade and occupation questionnaires to Washington state department of transportation prequalified contractors; and

(c) Compiling and maintaining lists of employers that are not required to be registered under chapter 18.27 RCW or licensed under chapter 19.28 RCW, but that employ workers in building service maintenance, in shipbuilding or ship repair, in the fabrication and/or manufacture of nonstandard items produced specifically for a public works project, and/or in the production and delivery of materials as defined in WAC 296-127-018. Trades and occupations utilized by the shipbuilding and ship repair industries shall not have their survey data combined with their construction counterparts, for the purpose of establishing prevailing wage rates for that industry.

(3)(a) Wage survey forms will be mailed to:

(i) Those contractors and employers whose businesses currently are active and were active during the established survey period, and whose response to the trade and occupation questionnaire indicates that they employ one or more of the trades or occupations being surveyed; and

(ii) Labor unions representing workers in the trades or occupations being surveyed.

(b) The department annually shall mail to statewide trade associations and statewide labor organizations a proposed schedule of trades intended to be surveyed during the upcoming fiscal year. In addition, the department shall notify those statewide trade associations and labor organizations, reasonably known to be affected, of the mailing of wage surveys.

(4) Data reported on survey forms may be verified by the department, and will be used only when submitted on behalf of or by:

(a) Individual contractors identified by a contractor registration number that currently is valid, and was valid during the established survey period;

(b) Employers that are not required to be registered under chapter 18.27 RCW or licensed under chapter 19.28 RCW, that directly employ and supervise workers as employees in building service maintenance, in shipbuilding or ship repair, in the manufacture of nonstandard items specifically produced for a public works project, or in the production and delivery of materials, as defined in WAC 296-127-018;

(c) Labor unions submitting wage and hour data on behalf of contractors and/or employers who are signatory to those unions' collective bargaining agreements covering the trade or occupation being surveyed; or

(d) Interested parties providing wage and hour data by trade and occupation from certified payroll records and/or from hours reported by trade and occupation on affidavits of wages paid, according to guidelines established by the department.

(5) The department shall use affidavit forms that include a requirement that contractors report the actual number of hours worked by each trade and occupation utilized on the public works project for which the affidavit is filed.

(6) Valid data reported on wage surveys shall be calculated, as follows:

(a) If the majority of hours reported for a trade or occupation in the largest city in a county is paid at the same wage rate, then that rate shall be established as the prevailing wage rate.

(b) If the same wage rate is not reported to have been paid for the majority of hours reported in the largest city in a county for a trade or occupation, then the average wage rate shall be established as the prevailing wage rate, based on a weighted average of the hours, wages, and benefits reported in the largest city.

(c) If a statistically significant number of hours fails to be reported for the largest city in a county, then the average wage rate for the county is established as the prevailing wage, based on a weighted average.

(d) If there fails to be reported for an entire county, sufficient hours to validate the survey data, that county's hours shall be combined with those reported for other counties that are adjacent, until the established hours threshold for validation has been met.

(7) Survey data will not be accepted if the data report the hours and wages of those who are exempt from the prevailing wage requirements of chapter 39.12 RCW, as defined in WAC 296-127-026.

(8)(a) The industrial statistician may utilize alternative methods to establish prevailing wage rates consistent with the terms of (b) of this subsection. These methods include, but are not limited to:

(i) The use of wage and hour data from the department of employment security;

(ii) The use of wage and hour data from the industrial insurance division of the department of labor and industries;

(iii) The use of data from surveys performed by the United States Department of Labor, wage and hour division; or

(iv) The use of wage and hour data reported to the department on affidavits of wages paid.

(b) These alternative methods will not be used for trades or occupations for which surveys had been completed as of the effective date of this section unless a subsequent survey produces insufficient data. In addition, these alternative methods may be used under circumstances that include, but are not limited to, the following:

(i) To establish prevailing wage rates for a new trade or occupation where a survey is not immediately feasible;

(ii) In response to an administrative or judicial determination of invalid wage rate or scope of work description;

(iii) In response to changes or additions in licensing, safety, or other requirements of other state agencies, departments or divisions; or

(iv) To establish rates for industries and trades and occupations generally not surveyed, in order to meet the requirement of having established wage rates for publication in contract or bid specifications as required by RCW 39.12.030.

(9) Any party that submits false information under this section shall, after a determination to that effect has been issued by the director after a hearing pursuant to chapter 34.05 RCW, forfeit as a civil penalty the sum of five hundred dollars.

[Statutory Authority: Chapters 39.04 and 39.12 RCW and RCW 43.22.270. 92-01-104, § 296-127-019, filed 12/18/91, effective 1/31/92; 88-22-046 (Order 88-22), § 296-127-019, filed 10/31/88.]

WAC 296-127-020 Interpretation of phrases used in chapter 39.12 RCW. (1) The "acceptance date of the public works project" referred to in RCW 39.12.065 is the date that

the contract awarding agency formally accepts the completed public works project pursuant to state law.

(2) RCW 39.12.050 and 39.12.065 refer to "inadvertent filing or reporting error." The department defines an error as "inadvertent" if it is made by a contractor, as defined by WAC 296-127-010(5), or employer that shows that the error was made notwithstanding the use of due care by the contractor or employer. The burden of proving that an error is inadvertent rests with the contractor or employer charged with the error.

(3) The definition of "locality" in RCW 39.12.010(2) contains the phrase "wherein the physical work is being performed." The department interprets this phrase to mean the actual work site. For example, if nonstandard items specifically produced for public works projects are prefabricated in a county other than the county wherein the public works project is to be completed, the wage for the off-site prefabrication shall be the applicable prevailing wage for the county in which the actual prefabrication takes place. Workers who deliver such nonstandard items, as well as materials pursuant to the terms of WAC 296-127-018, shall be paid the applicable prevailing wage for the county in which the public works project is located.

(4) In the implementation and enforcement of RCW 39.12.050 the terms "contractor" and "subcontractor" include an entity, however organized, with substantially identical corporate and/or operational structure to an entity that has been found to violate RCW 39.12.050. The factors used to determine substantial identity shall include an assessment of whether there is: Substantial continuity of the same business operation; use of the same machinery and/or equipment; similarity of jobs and types of working conditions; continuity of supervisors; and similarity of product or services.

[Statutory Authority: Chapters 39.04 and 39.12 RCW and RCW 43.22.270. 92-01-104, § 296-127-020, filed 12/18/91, effective 1/31/92. Statutory Authority: RCW 39.12.050, 39.12.065, 43.22.270 and 51.04.020. 86-03-063 (Order 85-28), § 296-127-020, filed 1/17/86. Statutory Authority: RCW 39.12.015, 39.12.060 and HB 795, 1982 1st ex.s. c 38. 82-18-041 (Order 82-28), § 296-127-020, filed 8/27/82.]

WAC 296-127-021 Apprentice worker. Any apprentice employed on public works projects for whom an apprentice agreement is registered and approved by the state apprenticeship council pursuant to chapter 49.04 RCW within 60 days of hiring may be considered an apprentice and paid the applicable prevailing hourly rate for an apprentice of that trade for all hours worked.

[Statutory Authority: RCW 39.12.015, 39.12.060 and House Bill 795, 1982 1st ex.s. c 38. 82-18-041 (Order 82-28), § 296-127-021, filed 8/27/82.]

WAC 296-127-022 Overtime according to RCW 49.28.065. (1) Work performed on public works contracts will not require the payment of overtime rates for the first two hours worked in excess of eight hours per day when the employer and employee voluntarily enter into an agreement wherein the employee will work up to ten hours per day in a four-day week to accomplish forty hours of work.

(2) Recognizing that there may be days when a full ten hours of work is not available, the remainder of the forty hours may be made up on another work day or days within the same work week, except work performed on Saturdays, Sundays, and holidays is subject to the established prevailing overtime provisions for a given trade or occupation, as provided in chapter 39.12 RCW.

(3) For the purpose of this section an agreement must:

(a) Have been authorized by employees who bargained collectively with their employers through representatives of their own choosing; or

(b) Be obtained in writing, signed, and dated by both parties; and

(c) Be entered into individually with each employee; and

(d) Be entered into separately for each public works project, except that an employer, at its option, may obtain an annual authorization; and

(e) State the name of the public works project with specificity; and

(f) Be entered into voluntarily by the employer and employee.

(4) Each employer must retain copies of the individual employee authorization agreements required pursuant to subsection (3) of this section for three years from the date of acceptance of the public works project by the contract awarding agency. Absence of an authorization record for an employee shall be deemed per se evidence of lack of that employee's authorization. Such records are payroll records, subject to the requirements of WAC 296-127-320.

(5) It is prohibited to work more than ten hours in any calendar day on a public works project except in cases of extraordinary emergency, such as danger to life or property.

(6) Notwithstanding the above provisions, overtime rates must be paid for all hours worked in excess of forty hours per week.

(7) This section provides a minimum public works overtime standard, and does not supersede prevailing overtime wage rates established under the authority of chapter 39.12 RCW.

[Statutory Authority: Chapters 39.04 and 39.12 RCW and RCW 43.22.270. 92-01-104, § 296-127-022, filed 12/18/91, effective 1/31/92. Statutory Authority: RCW 43.22.270. 88-19-055 (Order 88-21), § 296-127-022, filed 9/15/88.]

WAC 296-127-023 Building service maintenance. The "public building service maintenance contracts" referred to in RCW 39.12.020 shall mean janitorial service contracts and cover only work performed by janitors, waxers, shampooers, and window cleaners.

For all building service maintenance contracts, the prevailing wage rates which are in effect on the date when the bids are required to be submitted to the contract awarding public agency are the minimum prevailing wage rates which must be paid for the first year of such contracts and thereafter. However, any building service maintenance contract of more than one year duration, must include wage increase language recognizing the potential for future variance in applicable prevailing wage(s) and specifying that the wages which a contractor shall pay its employees must be altered annually to recognize and follow the most recently promulgated increases in prevailing wages each year after the first year of the contract period. The cost of the increases in the wages due employees shall be borne by the contract awarding agency.

[Statutory Authority: Chapters 39.04 and 39.12 RCW and RCW 43.22.270. 88-22-046 (Order 88-22), § 296-127-023, filed 10/31/88.]

WAC 296-127-025 Applicability of joint federal-state standards. (1) When a public works project is subject to the provisions of the Washington state public works law, chapter 39.12 RCW, and the Federal Davis-Bacon and related acts, the contractor and every subcontractor on that project must pay at least the Washington state prevailing wage rates, if they are higher than the federal prevailing wage rates for the project unless specifically preempted by federal law.

(2) When the federal prevailing wage rates are higher than the Washington state prevailing wage rates, the contractor shall pay the federal rate as required by federal law.

[Statutory Authority: Chapters 39.04 and 39.12 RCW and RCW 43.22.270. 92-01-104, § 296-127-025, filed 12/18/91, effective 1/31/92; 88-22-046 (Order 88-22), § 296-127-025, filed 10/31/88.]

WAC 296-127-026 Exemptions for sole owners and their spouses, partnerships, corporations, and employees of public agencies. The prevailing wage requirements of chapter 39.12 RCW do not apply to:

(1) Sole owners and their spouses.

(2) Any partner who owns at least thirty percent of a partnership.

(3) The president, vice-president and treasurer of a corporation if each one owns at least thirty percent of the corporation.

(4) Workers regularly employed on monthly or per diem salary by the state or any political subdivision created by its laws.

[Statutory Authority: Chapters 39.04 and 39.12 RCW and RCW 43.22.270. 88-22-046 (Order 88-22), § 296-127-026, filed 10/31/88.]

WAC 296-127-030 Irrigation district exemption. Contracts awarded by irrigation districts for the reclamation or development of waste or undeveloped lands are not covered by the prevailing wage law, pursuant to RCW 39.04.-010. Any work, construction alteration, repair or improvement that is not solely for the reclamation or development of waste or undeveloped land is covered by the prevailing wage laws and therefore subject to all the laws and regulations contained in and adopted pursuant to chapter 39.12 RCW.

[Statutory Authority: RCW 39.12.015, 39.12.060 and House Bill 795, 1982 1st ex.s. c 38. 82-18-041 (Order 82-28), § 296-127-030, filed 8/27/82.]

WAC 296-127-040 Statement of intent to pay prevailing wages. (1) All statements of intent to pay prevailing wages submitted to the industrial statistician of the department shall be accompanied by a fee of twenty-five dollars for each statement. Fees shall be made payable to the department of labor and industries.

(2) Any agency, division, or department of the state of Washington which through agreement with the department certifies statements of intent for its own contracts shall provide to the industrial statistician each month the number of statements of intent certified and quarterly shall send a fee of twenty dollars for each statement of intent to pay prevailing wages it has certified. This fee shall be sent to the industrial statistician and be made payable to the department of labor and industries.

[Statutory Authority: RCW 39.12.070. 94-01-100, § 296-127-040, filed 12/16/93, effective 1/16/94. Statutory Authority: RCW 43.22.270. 90-24-053, § 296-127-040, filed 12/3/90, effective 1/3/91. Statutory Authority: Chapters 39.04 and 39.12 RCW and RCW 43.22.270. 88-22-046 (Order 88-22), § 296-127-040, filed 10/31/88. Statutory Authority: RCW 39.12.015, 39.12.060 and House Bill 795, 1982 1st ex.s. c 38. 82-18-041 (Order 82-28), § 296-127-040, filed 8/27/82.]

WAC 296-127-045 Affidavit of wages paid. (1) All affidavits of wages paid submitted to the industrial statistician of the department shall be accompanied by a fee of twenty-five dollars for each affidavit of wages paid. All fees shall be made payable to the department of labor and industries.

(2) Any agency, division, or department of the state of Washington which through agreement with the department certifies affidavits of wages paid for its own contracts shall provide to the industrial statistician each month the number of affidavit of wages paid it has certified and quarterly shall send a fee of twenty dollars for each affidavit of wages paid it has certified. This fee shall be sent to the industrial statistician and be made payable to the department of labor and industries.

[Statutory Authority: RCW 39.12.070. 94-01-100, § 296-127-045, filed 12/16/93, effective 1/16/94. Statutory Authority: RCW 43.22.270. 90-24-053, § 296-127-045, filed 12/3/90, effective 1/3/91. Statutory Authority: Chapters 39.04 and 39.12 RCW and RCW 43.22.270. 88-22-046 (Order 88-22), § 296-127-045, filed 10/31/88. Statutory Authority: RCW 39.12.015, 39.12.060 and House Bill 795, 1982 1st ex.s. c 38. 82-18-041 (Order 82-28), § 296-127-045, filed 8/27/82.]

WAC 296-127-050 Filing of statements of intent to pay prevailing wages and affidavits of wages paid for contracts under two thousand five hundred dollars. A contract awarding agency may, as part of a public works contract, enter into an agreement with a contractor to approve statements of intent to pay prevailing wages and affidavits of wages paid on behalf of the department for contracts wherein the total amount does not exceed two thousand five hundred dollars as provided in RCW 39.12.040(2), pursuant to the following terms:

(1) The agreement must be incorporated into the bid specifications and contract document;

(2) Statement of intent forms and affidavit of wages paid forms, provided by the department, must be filed with the contract awarding agency by the contractor prior to the disbursement of public funds;

(3) Contract awarding agencies must retain copies of all statements of intent to pay prevailing wages received pursuant to this section for a period of not less than three years;

(4) Contract awarding agencies must send to the department copies of all affidavits of wages paid received pursuant to this section within thirty days of receipt from the contractor;

(5) The contract awarding agency shall accept full responsibility and liability for payment of any valid wage claims directly to the claimant;

(6) The contract awarding agency may proceed against any contractor found to have violated the provisions of the statute, and may debar such contractor from consideration for future contracts for up to one year and will provide the department with the names and contractor registration or other employer identification numbers of any such debarred contractors within thirty days of the debarment; and

(7) Contract awarding agencies and contractors shall not enter into contracts or agreements to perform public work that subdivide or otherwise disaggregate any public works project of more than two thousand five hundred dollars, to enable such public works project to be awarded pursuant to this section.

[Statutory Authority: Chapters 39.04 and 39.12 RCW and RCW 43.22.270. 92-01-104, § 296-127-050, filed 12/18/91, effective 1/31/92.]

WAC 296-127-060 Director of department of labor and industries to arbitrate disputes—General provisions. (1) The contract executed between a public authority and the successful bidder or contractor and all of his subcontractors shall contain a provision that in case any dispute arises as to what are the prevailing rates of wages for a specific trade, craft or occupation and such dispute cannot be adjusted by the parties in interest, including labor and management representatives, the matter shall be referred for arbitration to the director, and his decision shall be final, conclusive, and binding on all parties involved in the dispute.

(2) In exercising his authority to hear and decide disputes the director shall consider among other things, timeliness, the nature of the relief sought, matters of undue hardship or injustice, or public interest. A "timely" request for arbitration is one received within 30 days after the contract has been awarded.

(3) Any party in interest who is seeking a modification or other change in a wage determination under RCW 39.12.015, and who has requested the industrial statistician to make such modification or other change and the request has been denied, after appropriate reconsideration by the assistant director shall have a right to petition for arbitration of the determination.

(a) For purpose of this section, the term "party in interest" is considered to include, without limitation:

(i) Any contractor, or an association representing a contractor, who is likely to seek or to work under a contract containing a particular wage determination, or any worker, laborer or mechanic, or any council of unions or any labor organization which represents a laborer or mechanic who is likely to be employed or to seek employment under a contract containing a particular wage determination, and

(ii) Any public agency concerned with the administration of a proposed contract or a contract containing a particular wage determination issued pursuant to chapter 39.12 RCW.

(b) For good cause shown, the director may permit any party in interest to intervene or otherwise participate in any proceeding held by the director. A petition to intervene or otherwise participate shall be in writing, and shall state with precision and particularity:

(i) The petitioner's relationship to the matters involved in the proceedings, and

(ii) The nature of the presentation which he would make. Copies of the petition shall be served on all parties or interested persons known to be participating in the proceeding, who may respond to the petition. Appropriate service shall be made of any response.

[Statutory Authority: RCW 39.12.015, 39.12.060 and House Bill 795, 1982 1st ex.s. c 38. 82-18-041 (Order 82-28), § 296-127-060, filed 8/27/82.]

WAC 296-127-061 Requests for arbitration. (1) The petition for arbitration (original and four copies) shall be filed with Director, Department of Labor and Industries, General Administration Building, Olympia, Washington 98504. In addition, copies of the petition shall be served personally or by mail upon each of the following:

(a) The public agency or agencies involved,

(b) The industrial statistician, and

(c) Any other person (or the authorized representatives of such person) known to be interested in the subject matter of the petition.

(2) The director shall under no circumstances request any administering agency to postpone any contract performance because of the filing of a petition. This is a matter which must be resolved directly with the administering agency by the petitioner or other party in interest.

(3) A petition for arbitration of a wage determination shall:

(a) Be in writing and signed by the petitioner or his counsel (or other authorized representative), and

(b) Identify clearly the wage determination, location of project or projects in question, and the agency concerned, and

(c) State that the petitioner has requested reconsideration of the wage determination in question and describe briefly the action taken in response to the request, and

(d) Contain a short and plain statement of the grounds for review, and

(e) Be accompanied by supporting data, views, or arguments, and

(f) Be accompanied by a filing fee of $75.00. Fees shall be made payable to the department of labor and industries.

[Statutory Authority: RCW 39.12.015, 39.12.060 and House Bill 795, 1982 1st ex.s. c 38. 82-18-041 (Order 82-28), § 296-127-061, filed 8/27/82.]

WAC 296-127-062 Conduct of arbitration hearing. (1) Interested persons other than the petitioner shall have a reasonable opportunity as specified by the director in particular cases to submit to the director written data, views, or arguments relating to the petition. Such material (original and four copies) shall be filed with the Director, Department of Labor and Industries, General Administration Building, Olympia, Washington 98504 and be accompanied by a filing fee of $35.00. Fees shall be made payable to the department of labor and industries. Copies of any such material shall be served on the petitioner and other interested persons.

(2) Each party in interest shall have the right to appear in person or by or with counsel or other qualified representatives in any proceeding before the director. If all parties agree, oral testimony may be waived and arguments submitted in writing.

(3) Upon his own initiative or upon motion of any interested person or party, the director may consolidate in any proceeding or concurrently consider two or more appeals which involve substantially the same persons or parties, or issues which are the same or closely related, if he finds that such consolidation or concurrent review will contribute to an efficient review and to the ends of justice, and it will not unduly delay consideration of any such appeals.

(4) The director shall prescribe the time and place for hearing. The director shall schedule the hearing within 45

days of the request. For good cause shown, the director may allow a continuance at the request of a party in interest.

(a) With respect to any proceeding before him, the director may upon his own initiative or upon the request of any interested person or party direct the interested persons or parties to appear before the director at a specified time and place in order to simplify the issues presented or to take up any other matters which may tend to expedite or otherwise facilitate the disposition of the proceeding.

(b) All papers submitted to the director under this section shall be filed with the Department of Labor and Industries, General Administration Building, Olympia, Washington 98504. An original and four copies of all papers shall be submitted. Service under this part shall be by the filing party or interested person; service may be personal or may be by mail. Service by mail is complete on mailing.

(5) The final disposition shall be by the director.

(a) The director may decline review of any case whenever in his judgment a review would be inappropriate or because of the lack of timeliness, the nature of the relief sought, or other reasons.

(b) The director shall decide the case upon the basis of all relevant matter contained in the entire record before him but the director may utilize his experience, technical competence, and specialized knowledge in evaluating the evidence.

(c) Upon reasonable notice to the parties or interested persons, the director may vary the procedures specified in this part in particular cases.

(6) The director may allow all parties a period of ten days for filing post-hearing briefs prior to closing the record and concluding the hearing.

(7) The director shall issue a written decision within 30 days of the conclusion of the hearing. A copy shall be sent to each party in interest.

[Statutory Authority: RCW 39.12.015, 39.12.060 and House Bill 795, 1982 1st ex.s. c 38. 82-18-041 (Order 82-28), § 296-127-062, filed 8/27/82.]

WAC 296-127-130 Filing of complaint. Any interested party, as defined in RCW 39.12.010(4) may file with the department a complaint alleging a violation of the prevailing wage laws. The complaint must describe the alleged violation and identify the alleged violator. It would aid the department's investigation if the complaint also specifies:

(1) The name and address of the complainant;

(2) The address of the alleged violator;

(3) The name and address of the public agency that awarded the contract;

(4) The date the public agency accepted the completed public work (if applicable);

(5) The specific rates of wages paid by the violator and the rates that allegedly should be paid;

(6) The exact amount of prevailing wages that are alleged to remain unpaid; and

(7) The date the bids were due on the public works project.

[Statutory Authority: RCW 39.12.050, 39.12.065, 43.22.270 and 51.04.020. 86-03-063 (Order 85-28), § 296-127-130, filed 1/17/86.]

WAC 296-127-140 Investigation of complaint. (1) The department shall investigate a complaint filed by an interested party unless the complaint was filed more than thirty days after the date the public agency accepted the public work that gave rise to the complaint. The department may, in its sole discretion, investigate a complaint filed more than thirty days after the acceptance date. However, the department may not charge a contractor with a violation of RCW 39.12.065 if the complaint is filed after the thirty-day limit.

The department's investigation shall determine whether a violation of RCW 39.12.065 or 39.12.050, or both, or of any other provision of chapter 39.12 RCW, occurred.

(2) If the department's investigation substantiates a complaint that alleges that a contractor has violated RCW 39.12.065, the department is required to attempt to collect unpaid wages for the contractor's employees. During the investigation, the department should be able to identify the affected employees. The department shall direct to the affected employees the best notice practicable under the circumstances, including individual notice to all employees who can be identified through reasonable effort. The notice shall inform the employee that (a) the department's final order, whether favorable or not, will apply to all employees; (b) any employee may, if he or she desires, move to intervene as a party in any hearing held as a result of the investigation; and (c) that the employee may have a private right of action to collect unpaid prevailing wages.

[Statutory Authority: RCW 39.12.050, 39.12.065, 43.22.270 and 51.04.020. 86-03-063 (Order 85-28), § 296-127-140, filed 1/17/86.]

WAC 296-127-150 Notice of violation. (1) If the department determines after its investigation that there is reasonable cause to believe that the prevailing wage law has been violated, the department shall notify the violator of its determination. The notice of violation shall be served on the violator personally or by certified mail.

(2) The notice of violation shall:

(a) Describe concisely the violation;

(b) Specify which statute or statutes were violated;

(c) If known, identify the laborers, workers, and mechanics who are affected by the violation;

(d) If known, state the amount of unpaid prevailing wages the violator owes;

(e) State that an employee cannot by contract or agreement waive the right to receive the prevailing wage;

(f) State the penalty that the department will assess for a violation, if any, of RCW 39.12.065 and 39.12.050; and

(g) State the date the complaint was filed with the department.

(3) RCW 39.12.065 and 39.12.050 establish the penalty amounts.

(4) If the notice alleges a violation of RCW 39.12.065, the department shall serve a copy of the notice of violation on the violator's sureties under chapters 39.08, 18.27, 19.28, and 60.28 RCW.

(5) The notice of violation shall inform the violator and, if a violation of RCW 39.12.065 is alleged, its sureties that they may request a hearing on the violations, the amount of unpaid prevailing wages owed, or the penalties assessed. The notice shall specify that if no hearing is requested within thirty days of the date of issuance of the notice the director shall issue a final, unappealable order finding that the violation did occur, ordering the violator to pay any unpaid prevailing wages, and assessing penalties.

[Statutory Authority: RCW 39.12.050, 39.12.065, 43.22.270 and 51.04.020. 86-03-063 (Order 85-28), § 296-127-150, filed 1/17/86.]

WAC 296-127-160 Appeal of notice of violation. The violator or any of its sureties who are interested in the matter may request a hearing on a notice of violation. One original and four copies of the request must be filed with the director within thirty days after the date the department issued the notice. The party requesting the hearing must also serve a copy of the notice on all interested sureties and, if the requestor is a surety, on the violator.

The request for hearing must be in writing and must specify:

(1) The name and address of the party requesting the hearing;

(2) The notice of violation that is being appealed;

(3) The items of the notice of violation that the requestor believes are erroneous; and

(4) The reasons the notice of violation is erroneous.

[Statutory Authority: RCW 39.12.050, 39.12.065, 43.22.270 and 51.04.020. 86-03-063 (Order 85-28), § 296-127-160, filed 1/17/86.]

WAC 296-127-170 Hearing on notice of violation. (1) The director may hear the appeal personally or may delegate the authority to hold the hearing and draft a proposed decision to an administrative law judge pursuant to chapter 34.12 RCW. The plaintiff in the hearing shall be the department, and the defendants shall be the violator and its interested sureties. The department shall have the burden of proving, by a preponderance of the evidence, that the violations occurred and that any wages were unpaid as stated in the notice.

(2) Any interested party may upon motion, be allowed to intervene as a plaintiff in the hearing. "Standing" shall be construed broadly to effectuate the remedial purposes of the prevailing wage law. An interested party, whether or not admitted as a plaintiff, may submit written arguments and affidavits. The parties shall be given an opportunity to respond to or rebut any arguments and affidavits before the person presiding over the hearing makes his or her decision.

(3) The hearing shall be conducted in accordance with the Uniform procedure rules, chapter 1-08 WAC.

(4) If the director presides over the hearing, the director shall issue a final decision that includes findings of fact and conclusions of law, and if appropriate an order to pay unpaid prevailing wages, a penalty, or both.

(5) If an administrative law judge presides over the hearing, she or he shall issue a proposed decision that includes findings of fact, conclusions of law, and if appropriate an order to pay unpaid prevailing wages, a penalty, or both. The proposed decision shall be served by certified mail or personally on the violator, the interested sureties, the department, and any interested parties who have intervened as plaintiffs. Any of these parties, if aggrieved by the proposed decision, may appeal to the director within thirty days after the date of issuance of the proposed decision. If none of the parties appeals within thirty days, the proposed decision may not be appealed either to the director or the courts.

(6) An appellant must file with the director an original and four copies of its notice of appeal. The notice of appeal must specify which findings and conclusions are erroneous. The appellant must attach to the notice the written arguments supporting its appeal.

The appellant must serve a copy of the notice of appeal and the arguments on the other parties. The respondent parties must file with the director their written arguments within thirty days after the date the notice of appeal and the arguments were served upon them.

(7) The director shall review the proposed decision in accordance with the Administrative Procedure Act, chapter 34.04 RCW. The director may: Allow the parties to present oral arguments as well as the written arguments; require the parties to specify the portions of the record on which the parties rely; require the parties to submit additional information by affidavit or certificate; remand the matter to the administrative law judge for further proceedings; and require a departmental employee to prepare a summary of the record for the director to review. The director shall issue a final decision that can affirm, modify, or reverse the proposed decision.

(8) The director shall serve the final decision on all parties. Any aggrieved party may appeal the final decision to superior court pursuant to RCW 34.04.130 unless the final decision affirms an unappealed proposed decision. If no party appeals within the period set by RCW 34.04.130, the director's decision is conclusive and binding on all parties.

[Statutory Authority: RCW 39.12.050, 39.12.065, 43.22.270 and 51.04.020. 86-03-063 (Order 85-28), § 296-127-170, filed 1/17/86.]

WAC 296-127-180 Effect of final decision finding a violation of RCW 39.12.065. If the director issues a final decision that includes a finding that a contractor violated RCW 39.12.065 and that the contractor owes unpaid prevailing wages, and the finding is not timely appealed or is affirmed by the courts, the findings and the decision are res judicata in any action by the department or by any interested party who was a plaintiff at the hearing, against the contractor and its sureties to recover the unpaid prevailing wages. The findings and decision are not res judicata in any action by an interested party who was not a plaintiff at the hearing.

[Statutory Authority: RCW 39.12.050, 39.12.065, 43.22.270 and 51.04.020. 86-03-063 (Order 85-28), § 296-127-180, filed 1/17/86.]

WAC 296-127-190 Filing of lien against retainage or bonds. (1) Upon receipt of a timely complaint that a contractor has violated RCW 39.12.065, and that the contractor owes unpaid prevailing wages, the department may file a lien against the retainage or bond obtained by the contractor under RCW 60.28.010.

(2) Upon issuance by the director of a final decision that finds that a contractor has violated RCW 39.12.065 or 39.12.050, and that sets a civil penalty for the violation, the department shall file liens for the penalty amount against the retainage and bonds the contractor obtained under RCW 39.12.065 (2)(c), 39.08.010, and 60.28.010.

[Statutory Authority: RCW 39.12.050, 39.12.065, 43.22.270 and 51.04.020. 86-03-063 (Order 85-28), § 296-127-190, filed 1/17/86.]

WAC 296-127-200 Surety bond payable to director. (1) RCW 39.12.065 (2)(c) authorizes the director to require a contractor to obtain a surety bond "running to the director in

the amount of the violation found." The intent and wording indicates that the director may require such a bond only after issuing a final decision finding that the contractor has violated RCW 39.12.065.

(2) The director may demand that a violating contractor post the bond when:

(a) The director has issued a final decision that finds that the contractor owes unpaid prevailing wages or a penalty, whether or not the decision has been appealed to the courts; and

(b) The retainage or bonds provided under RCW 60.28.010, 18.27.040, and 19.28.120 are or may be insufficient to pay the amount of prevailing wages or the penalty owed.

(3) A contractor may at any time voluntarily obtain a bond running to the director to guarantee the payment of the prevailing wages and any penalty. The contractor may allow the director to satisfy any claim for unpaid wages or the penalty from this bond instead of from the retainage or bonds obtained under RCW 60.28.010, 18.27.040, 19.28.120, and 39.08.010.

[Statutory Authority: RCW 39.12.050, 39.12.065, 43.22.270 and 51.04.020. 86-03-063 (Order 85-28), § 296-127-200, filed 1/17/86.]

WAC 296-127-210 Suit against retainage and bonds. (1) If the director issues a final decision that includes a finding that the contractor has violated RCW 39.12.065 or 39.12.050, and the finding is not timely appealed or is affirmed by the courts, the department may file suit against the appropriate retainage and bonds to recover the amount of unpaid prevailing wages or the civil penalty.

(2) The department may, before issuance of a final decision, file suit against the appropriate retainage and bonds to recover unpaid prevailing wages if the filing of a suit is necessary to preserve the claim. The suit shall be held in abeyance pending the exhaustion of administrative remedies.

[Statutory Authority: RCW 39.12.050, 39.12.065, 43.22.270 and 51.04.020. 86-03-063 (Order 85-28), § 296-127-210, filed 1/17/86.]

WAC 296-127-220 Distribution of recovery. (1) Upon making a recovery pursuant to RCW 39.12.065(2) against a contractor's retainage or bonds, the department shall distribute the proceeds and any award of attorneys' fees and costs as follows:

(a) The recovery shall be paid to the employees of the violator who did not receive the correct prevailing wage. The distribution among employees shall be based on the evidence of wage loss produced at the hearing on the violation.

(b) Next shall be paid the costs the department incurred in making the recovery. The department shall pay these costs from the attorney's fees and costs awarded by the courts.

(2) A contractor who is the subject of an investigation or who has received a notice of violation may choose not to contest the matter and may tender to the department the amount of unpaid prevailing wages the department determines is owed. The department, after identifying and notifying the affected employees pursuant to WAC 296-127-140, shall accept the tender if the contractor in writing acknowledges that the department, by accepting the tendered amount, does not absolve the contractor from liability to any employee for unpaid prevailing wages.

(3) If an employee for whom the department has recovered unpaid prevailing wages cannot be found, the department shall retain the wages for the one-year period required by RCW 63.29.150. After the statutory period has lapsed, the department shall pay the wages to the department of revenue in accordance with RCW 63.29.170.

[Statutory Authority: RCW 39.12.050, 39.12.065, 43.22.270 and 51.04.020. 86-03-063 (Order 85-28), § 296-127-220, filed 1/17/86.]

WAC 296-127-300 Filing and service. All papers required to be filed with the director under this chapter or chapter 39.12 RCW shall be addressed to Director, Department of Labor and Industries, General Administration Building, Olympia, WA. 98504.

Filing and service shall be made as allowed by WAC 1-08-090 through 1-08-140.

[Statutory Authority: RCW 39.12.050, 39.12.065, 43.22.270 and 51.04.020. 86-03-063 (Order 85-28), § 296-127-300, filed 1/17/86.]

WAC 296-127-310 List of violators. The department shall maintain a list of all contractors who are forbidden to bid on a public works project, or to have a bid accepted, pursuant to RCW 39.12.065(3) or 39.12.050. To the extent required by RCW 39.12.065(3) and 39.12.050, the industrial statistician shall refuse to certify any statement of intent to pay the prevailing wage or affidavit of wages paid that he or she determines was submitted by a contractor on the list. Because the department receives a large number of requests for certification, the department shall not be liable to any person or entity for certifying a statement or an affidavit of a contractor on the list.

The industrial statistician shall make the list available upon request.

[Statutory Authority: RCW 39.12.050, 39.12.065, 43.22.270 and 51.04.020. 86-03-063 (Order 85-28), § 296-127-310, filed 1/17/86.]

WAC 296-127-320 Payroll. (1) Each contractor shall keep accurate payroll records for three years from the date of acceptance of the public works project by the contract awarding agency, showing the name, address, Social Security number, trade or occupation, straight time rate, hourly rate of usual benefits as defined by WAC 296-127-014(1), and overtime hours worked each day and week, including any employee authorizations executed pursuant to WAC 296-127-022, and the actual rate of wages paid, for each laborer, worker, and mechanic employed by the contractor for work performed on a public works project.

(2) A contractor shall, within ten days after it receives a written request, from the department or from any interested party as defined by RCW 39.12.010(4), file a certified copy of the payroll records with the agency that awarded the public works contract and with the department.

(3) A contractor's noncompliance with this section shall constitute a violation of RCW 39.12.050.

[Statutory Authority: Chapters 39.04 and 39.12 RCW and RCW 43.22.270. 92-01-104, § 296-127-320, filed 12/18/91, effective 1/31/92. Statutory Authority: RCW 39.12.050, 39.12.065, 43.22.270 and 51.04.020. 86-03-063 (Order 85-28), § 296-127-320, filed 1/17/86.]

WAC 296-127-400 Applicability. WAC 296-127-400 through 296-127-470 are issued pursuant to RCW 39.12.022,

authorizing the director of the department of labor and industries, to the extent necessary in order to prevent curtailment of opportunities for employment, to issue special subprevailing wage certificates for employment of individuals whose earning capacity is impaired by physical or mental deficiency or injury at wages lower than the prevailing rate applicable under RCW 39.12.020. Subprevailing wage certificates shall be subject to the conditions prescribed in these regulations.

[Statutory Authority: RCW 39.12.022. 90-19-061, § 296-127-400, filed 9/17/90, effective 10/18/90.]

WAC 296-127-410 Definitions. For the purposes of WAC 296-127-400 through 296-127-470:

(1) "Developmental disability" means a disability attributable to mental retardation, cerebral palsy, epilepsy, autism, or another neurological or other condition of an individual found by the secretary of social and health services to be closely related to mental retardation or to require treatment similar to that required for individuals with mental retardation, which disability originates before the individual attains age eighteen, which has continued or can be expected to continue indefinitely, and which constitutes a substantial handicap to the individual.

(2) "Handicapped worker" means an individual whose earning capacity for the work to be performed is impaired by physical or mental deficiency or injury.

(3) "Prevailing rate" means the prevailing rate of wage as defined in RCW 39.12.010 and as determined by the industrial statistician.

[Statutory Authority: RCW 39.12.022. 90-19-061, § 296-127-410, filed 9/17/90, effective 10/18/90.]

WAC 296-127-420 Application for a subprevailing wage certificate. (1) Nonprofit vocational rehabilitation programs may apply for a subprevailing wage certificate authorizing the employment of one or more handicapped workers with a developmental disability at less than the prevailing rate. An application for each worker shall be filed with the office of the industrial statistician not less than annually upon forms approved by the director or an authorized representative of the director.

(2) The application shall be signed jointly by the employer, the handicapped worker for whom such application is being made, and by the parent or guardian of the handicapped worker except as otherwise authorized by the director or an authorized representative of the director.

[Statutory Authority: RCW 39.12.022. 90-19-061, § 296-127-420, filed 9/17/90, effective 10/18/90.]

WAC 296-127-430 Conditions for granting a subprevailing wage certificate. (1) A subprevailing wage certificate may be issued to a nonprofit vocational rehabilitation program if the application is in proper form and sets forth facts showing:

(a) A wage below prevailing rate is necessary to prevent curtailment of the handicapped worker's opportunities for employment;

(b) The handicap impairs the earning capacity of the worker for the work to be performed;

(c) The percentage of full productivity at which the handicapped worker functions; and

(d) A description of the duties to be performed by each handicapped worker;

(e) The nature of the disability; and

(f) An addendum containing a detailed explanation of the nature of the disability.

(2) The industrial statistician shall not require a nonprofit vocational rehabilitation program to provide the information required in subsection (1)(f) of this section if it provides a notarized copy of a federal certificate granted by the United States department of labor under section 14(c) of the Federal Fair Labor Standards Act and any documentation deemed necessary by the industrial statistician identifying the workers with a developmental disability, a description of the duties to be performed, and the percentage of productivity at which each worker functions.

(3) The director or an authorized representative of the director may require the submission of additional information to that required by subsection (1) or (2) of this section shown on the application and may require the handicapped worker to take a medical examination where it is deemed necessary in order to determine whether or not the issuance of a certificate is justified.

[Statutory Authority: RCW 39.12.022. 90-19-061, § 296-127-430, filed 9/17/90, effective 10/18/90.]

WAC 296-127-440 Issuance of a subprevailing wage certificate. If the application and other available information indicate that the requirements of this regulation are satisfied, the director or an authorized representative of the director may issue a subprevailing wage certificate. If issued, copies of the subprevailing wage certificate shall be mailed to the employer, the handicapped worker, and to the parent or guardian of the handicapped worker. If denied, the employer, the handicapped worker, and the parent or guardian of the handicapped worker shall be given written notice of the denial.

[Statutory Authority: RCW 39.12.022. 90-19-061, § 296-127-440, filed 9/17/90, effective 10/18/90.]

WAC 296-127-450 Terms of subprevailing wage certificate. (1) A subprevailing wage certificate shall specify, among other things, the names of the handicapped workers, the name of the employer, the duties to be performed by the handicapped worker, the percentage of the prevailing rate authorized to be paid, and the period of time during which that percentage of the prevailing rate may be paid. A certificate shall also indicate that the percentage of the prevailing rate to be paid a handicapped worker shall change to reflect an increase or decrease in the worker's productivity when the worker's productivity is determined to change.

(2) A subprevailing wage certificate shall be effective for a period of one year or less as designated by the director or an authorized representative of the director. A handicapped worker employed under such certificate may be paid at the specified percentage of the prevailing rate only during the effective period of the certificate.

(3) Notwithstanding the requirements of chapter 49.46 RCW and its administrative regulations, the percentage of the prevailing rate authorized to be paid shall be fixed at a figure

designed to reflect adequately the percentage of productivity at which the handicapped worker functions.

(4) Any money received by a handicapped worker by reason of any state or federal pension or compensation program for handicapped persons shall not be considered as offsetting any part of the wage or remuneration due the handicapped worker by the employer.

(5) A handicapped worker shall be paid not less than one and one-half times the rate specified in the subprevailing wage certificate for hours worked in excess of forty hours per workweek or eight hours per day.

(6) The terms of any subprevailing wage certificate, including the percentage of the prevailing rate authorized to be paid, may be amended by the director or an authorized representative of the director upon written notice to the parties concerned, if the facts justify such amendment.

[Statutory Authority: RCW 39.12.022. 90-19-061, § 296-127-450, filed 9/17/90, effective 10/18/90.]

WAC 296-127-460 Renewal of subprevailing wage certificate. Application for renewal of any subprevailing wage certificate shall be filed in the same manner as an original application. An application for renewal shall include the most recent evaluation conducted within the past year of the productivity level at which the handicapped worker functions. If such application has been filed prior to the expiration date of the certificate, the certificate shall remain in effect until the application for renewal has been granted or denied.

[Statutory Authority: RCW 39.12.022. 90-19-061, § 296-127-460, filed 9/17/90, effective 10/18/90.]

WAC 296-127-470 Review. Any person aggrieved by any action of the director or an authorized representative of the director taken pursuant to this regulation may, within fifteen days after notice of such action has been mailed, file with the director a petition for review of the action complained of, setting forth grounds for seeking such review. If reasonable grounds exist, the director or an authorized representative of the director may grant such review and to the extent deemed appropriate afford all interested persons an opportunity to be heard on such review.

[Statutory Authority: RCW 39.12.022. 90-19-061, § 296-127-470, filed 9/17/90, effective 10/18/90.]

WAC 296-127-990 Severability. If any provision of this chapter or its application to any persons or circumstances is held invalid by state or federal court, the remainder of the chapter or the application of the provision to other persons or circumstances is not affected.

[Statutory Authority: Chapters 39.04 and 39.12 RCW and RCW 43.22.270. 92-01-104, § 296-127-990, filed 12/18/91, effective 1/31/92.]

Chapter 296-128 WAC
MINIMUM WAGES

WAC

RECORDKEEPING PROVISIONS

296-128-010 Records required.
296-128-011 Special recordkeeping requirements.
296-128-012 Overtime for truck and bus drivers.
296-128-015 Definitions of workday and workweek.
296-128-020 Term for keeping records.
296-128-025 Place for keeping records and availability for inspection.
296-128-030 Petitions for exceptions.
296-128-035 Payment interval.

HANDICAPPED WORKERS

296-128-050 Applicability of this regulation.
296-128-055 Definition.
296-128-060 Application for certificate.
296-128-065 Conditions for granting a certificate.
296-128-070 Issuance of certificate.
296-128-075 Terms of certificate.
296-128-080 Renewal of certificate.
296-128-085 Review.
296-128-090 Amendment of this regulation.

EMPLOYMENT OF LEARNERS

296-128-100 Authority.
296-128-105 Definitions.
296-128-110 Application for learner certificate.
296-128-115 Procedure for action upon an application.
296-128-120 Conditions governing issuance of learner certificates.
296-128-125 Terms and conditions of employment under learner certificates.
296-128-130 Records to be kept by employers of learners.
296-128-135 Amendment and revocation of learner certificate.
296-128-140 Supplemental regulations.
296-128-145 Reconsideration and review.
296-128-150 Procedure for amendment.

STUDENT LEARNERS

296-128-175 Applicability of the regulation.
296-128-180 Definitions.
296-128-185 Application for certificate.
296-128-190 Procedure for action upon application.
296-128-195 Conditions governing issuance of special student learner certificate.
296-128-200 Terms and conditions of special student learner certificate.
296-128-205 Term of special certificate.
296-128-210 Review.
296-128-215 Amendment of this regulation.

APPRENTICES

296-128-225 Employment of apprentices at subminimum wages.
296-128-230 Definition of apprentice.
296-128-235 Registration of apprenticeship agreement.
296-128-240 Procedure for issuing certificates authorizing employment of apprentices at subminimum wages.
296-128-245 Terms of special certificate.
296-128-250 Hearing procedure.

EMPLOYMENT OF STUDENT WORKERS

296-128-275 Applicability.
296-128-280 Definitions.
296-128-285 Filing applications.
296-128-290 Issuing or denying certificates.
296-128-295 Conditions governing issuance of certificates.
296-128-300 Data required on certificate.
296-128-305 Wage rate.
296-128-310 Records.
296-128-315 Amending and revoking certificates.
296-128-400 Minors.
296-128-500 Purpose.
296-128-510 Executive.
296-128-520 Administrative.
296-128-530 Professional.
296-128-532 Deductions for salaried, exempt employees.
296-128-533 Public employees.
296-128-535 Are professional computer employees exempt from the Washington Minimum Wage Act?
296-128-540 Outside salesman.
296-128-550 Regular rate of pay.
296-128-560 Compensating time off in lieu of overtime pay.

DISPOSITION OF SECTIONS FORMERLY CODIFIED IN THIS CHAPTER

296-128-410 Counselor staff occupations in organized seasonal recreational camps—Women and minors. [Industrial Welfare Order 11-63, filed 9/13/63; Minimum Wage and Welfare Order 54, filed 3/23/60.] Repealed by Order 77-32,

filed 12/30/77. Later promulgation, see chapter 296-125 WAC.

296-128-415 Food processing industry—Women and minors. [Industrial Welfare Order 5-62, filed 11/25/64; Minimum Wage and Welfare Order 51, filed 3/23/60.] Repealed by Order 77-32, filed 12/30/77. Later promulgation, see chapter 296-125 WAC.

296-128-420 Fresh fruit and vegetable packing industry—Women and minors. [Industrial Welfare Order 6-62, filed 11/25/64; Minimum Wage and Welfare Order 52, filed 3/23/60.] Repealed by Order 77-32, filed 12/30/77. Later promulgation, see chapter 296-125 WAC.

296-128-425 General amusement and recreation industry—Women and minors. [Industrial Welfare Order 8-62, filed 11/25/64; Minimum Wage Order 45-A, filed 3/23/60.] Repealed by Order 77-32, filed 12/30/77. Later promulgated, see chapter 296-125 WAC.

296-128-430 Health care industry—Women and minors. [Industrial Welfare Order 68-3, filed 5/8/68, effective 7/15/68; Industrial Welfare Order 10-62, filed 11/25/64; Minimum Wage Order 46, filed 3/23/60.] Repealed by Order 77-32, filed 12/30/77. Later promulgation, see chapter 296-125 WAC.

296-128-435 Laundry, dry-cleaning and dye works industry—Women and minors. [Industrial Welfare Order 3-62, filed 11/25/64; Minimum Wage and Welfare Order 48, filed 3/23/60.] Repealed by Order 77-32, filed 12/30/77. Later promulgation, see chapter 296-125 WAC.

296-128-440 Manufacturing industry and general working conditions—Women and minors. [Industrial Welfare Order 2-62, filed 11/25/64; Minimum Wage and Welfare Order 50, filed 3/23/60.] Repealed by Order 77-32, filed 12/30/77. Later promulgation, see chapter 296-125 WAC.

296-128-445 Mercantile industry, wholesale and retail—Women and minors. [Order 71-5, § 296-128-445, filed 5/26/71, effective 7/1/71, Mercantile Industrial Welfare Order 1-71; Industrial Welfare Order 1-62, filed 11/25/64; Minimum Wage Order 44, filed 3/23/60.] Repealed by Order 77-32, filed 12/30/77. Later promulgation, see chapter 296-125 WAC.

296-128-4451 Applicability. [Order 71-5, § 296-128-4451, filed 5/26/71, effective 7/1/71.] Repealed by Order 77-32, filed 12/30/77. Later promulgation, see chapter 296-125 WAC.

296-128-4452 Definitions. [Order 71-5, § 296-128-4452, filed 5/26/71, effective 7/1/71.] Repealed by Order 77-32, filed 12/30/77. Later promulgation, see chapter 296-125 WAC.

296-128-4453 Minimum wages. [Order 71-5, § 296-128-4453, filed 5/26/71, effective 7/1/71.] Repealed by Order 77-32, filed 12/30/77. Later promulgation, see chapter 296-125 WAC.

296-128-4454 Deductions. [Order 71-5, § 296-128-4454, filed 5/26/71, effective 7/1/71.] Repealed by Order 77-32, filed 12/30/77. Later promulgation, see chapter 296-125 WAC.

296-128-4455 Statements furnished. [Order 71-5, § 296-128-4455, filed 5/26/71, effective 7/1/71.] Repealed by Order 77-32, filed 12/30/77. Later promulgation, see chapter 296-125 WAC.

296-128-4456 Records. [Order 71-5, § 296-128-4456, filed 5/26/71, effective 7/1/71.] Repealed by Order 77-32, filed 12/30/77. Later promulgation, see chapter 296-125 WAC.

296-128-4457 Meal and rest periods. [Order 71-5, § 296-128-4457, filed 5/26/71, effective 7/1/71.] Repealed by Order 77-32, filed 12/30/77. Later promulgation, see chapter 296-125 WAC.

296-128-4458 Working conditions. [Order 71-5, § 296-128-4458, filed 5/26/71, effective 7/1/71.] Repealed by Order 77-32, filed 12/30/77. Later promulgation, see chapter 296-125 WAC.

296-128-4459 Uniforms. [Order 71-5, § 296-128-4459, filed 5/26/71, effective 7/1/71.] Repealed by Order 77-32, filed 12/30/77. Later promulgation, see chapter 296-125 WAC.

296-128-446 Minor work permits. [Order 71-5, § 296-128-446, filed 5/26/71, effective 7/1/71.] Repealed by Order 77-32, filed 12/30/77. Later promulgation, see chapter 296-125 WAC.

296-128-4461 Posting of order. [Order 71-5, § 296-128-4461, filed 5/26/71, effective 7/1/71.] Repealed by Order 77-32, filed 12/30/77. Later promulgation, see chapter 296-125 WAC.

296-128-4462 Separability. [Order 71-5, § 296-128-4462, filed 5/26/71, effective 7/1/71.] Repealed by Order 77-32, filed 12/30/77. Later promulgation, see chapter 296-125 WAC.

296-128-4463 Penalties. [Order 71-5, § 296-128-4463, filed 5/26/71, effective 7/1/71.] Repealed by Order 77-32, filed 12/30/77. Later promulgation, see chapter 296-125 WAC.

296-128-450 Office workers—Women and minors. [Industrial Welfare Order 13-63, filed 11/25/64; Minimum Wage Order 43, filed 3/23/60; Statement of interpretation of applicability of Industrial Welfare Committee Order 13-63, office workers, filed 11/25/64.] Repealed by Order 77-32, filed 12/30/77. Later promulgation, see chapter 296-125 WAC.

296-128-455 Personal service industry—Women and minors. [Industrial Welfare Order 4-62, filed 11/25/64.] Repealed by Order 77-32, filed 12/30/77. Later promulgation, see chapter 296-125 WAC.

296-128-460 Public housekeeping industrial—Women and minors. [Order 71-5 (Industrial Welfare Order No. 9-71), § 296-128-460, filed 5/26/71, effective 7/1/71; Industrial Welfare Order 9-62, filed 11/25/64; Minimum Wage Order 46, filed 3/23/60.] Repealed by Order 77-32, filed 12/30/77. Later promulgation, see chapter 296-125 WAC.

296-128-4601 Applicability. [Order 71-5, § 296-128-4601, filed 5/26/71, effective 7/1/71.] Repealed by Order 77-32, filed 12/30/77. Later promulgation, see chapter 296-125 WAC.

296-128-4602 Definitions. [Order 71-5, § 296-128-4602, filed 5/26/71, effective 7/1/71.] Repealed by Order 77-32, filed 12/30/77. Later promulgation, see chapter 296-125 WAC.

296-128-4603 Minimum wages. [Order 71-5, § 296-128-4603, filed 5/26/71, effective 7/1/71.] Repealed by Order 77-32, filed 12/30/77. Later promulgation, see chapter 296-125 WAC.

296-128-4604 Deductions. [Order 71-5, § 296-128-4604, filed 5/26/71, effective 7/1/71.] Repealed by Order 77-32, filed 12/30/77. Later promulgation, see chapter 296-125 WAC.

296-128-4605 Statements furnished. [Order 71-5, § 296-128-4605, filed 5/26/71, effective 7/1/71.] Repealed by Order 77-32, filed 12/30/77. Later promulgation, see chapter 296-125 WAC.

296-128-4606 Records. [Order 71-5, § 296-128-4606, filed 5/26/71, effective 7/1/71.] Repealed by Order 77-32, filed 12/30/77. Later promulgation, see chapter 296-125 WAC.

296-128-4607 Meals and lodging. [Order 71-5, § 296-128-4607, filed 5/26/71, effective 7/1/71.] Repealed by Order 77-32, filed 12/30/77. Later promulgation, see chapter 296-125 WAC.

296-128-4608 Meal and rest periods. [Order 71-5, § 296-128-4608, filed 5/26/71, effective 7/1/71.] Repealed by Order 77-32, filed 12/30/77. Later promulgation, see chapter 296-125 WAC.

296-128-4609 Working conditions. [Order 71-5, § 296-128-4609, filed 5/26/71, effective 7/1/71.] Repealed by Order 77-32, filed 12/30/77. Later promulgation, see chapter 296-125 WAC.

296-128-461 Uniforms. [Order 71-5, § 296-128-461, filed 5/26/71, effective 7/1/71.] Repealed by Order 77-32, filed 12/30/77. Later promulgation, see chapter 296-125 WAC.

296-128-4611 Minor work permits. [Order 71-5, § 296-128-4611, filed 5/26/71, effective 7/1/71.] Repealed by Order 77-32, filed 12/30/77. Later promulgation, see chapter 296-125 WAC.

296-128-4612 Posting of order. [Order 71-5, § 296-128-4612, filed 5/26/71, effective 7/1/71.] Repealed by Order 77-32, filed 12/30/77. Later promulgation, see chapter 296-125 WAC.

296-128-4613 Separability. [Order 71-5, § 296-128-4613, filed 5/26/71, effective 7/1/71.] Repealed by Order 77-32, filed 12/30/77. Later promulgation, see chapter 296-125 WAC.

296-128-4614 Penalties. [Order 71-5, § 296-128-4614, filed 5/26/71, effective 7/1/71.] Repealed by Order 77-32, filed 12/30/77. Later promulgation, see chapter 296-125 WAC.

296-128-465 Telephone and telegraph industry—Women and minors. [Industrial Welfare Order 12-63, filed 11/25/64; Minimum Wage and Welfare Order 53, filed 3/23/60.] Repealed by Order 77-32, filed 12/30/77. Later promulgation, see chapter 296-125 WAC.

296-128-470 Theatrical amusement and recreation industry—Women and minors. [Industrial Welfare Order 7-62, filed 11/25/64; Minimum Wage Order 45, filed 3/23/60.] Repealed by Order 77-32, filed 12/30/77. Later promulgation, see chapter 296-125 WAC.

RECORDKEEPING PROVISIONS

WAC 296-128-010 Records required. For all employees who are subject to RCW 49.46.020, employers shall be required to keep and preserve payroll or other records containing the following information and data with respect to each and every employee to whom said section of said act applies:

(1) Name in full, and on the same record, the employee's identifying symbol or number if such is used in place of name on any time, work, or payroll records. This shall be the same name as that used for Social Security record purposes;

(2) Home address;

(3) Occupation in which employed;

(4) Date of birth if under 18;

(5) Time of day and day of week on which the employee's workweek begins. If the employee is part of a workforce or employed in or by an establishment all of whose workers have a workweek beginning at the same time on the same day, a single notation of the time of the day and beginning day of the workweek for the whole workforce or establishment will suffice. If, however, any employee or group of employees has a workweek beginning and ending at a different time, a separate notation shall then be kept for that employee or group of employees;

(6) Hours worked each workday and total hours worked each workweek (for purposes of this section, a "workday" shall be any consecutive 24 hours);

(7) Total daily or weekly straight-time earnings or wages; that is, the total earnings or wages due for hours worked during the workday or workweek, including all earnings or wages due during any overtime worked, but exclusive of overtime excess compensation;

(8) Total overtime excess compensation for the workweek; that is, the excess compensation for overtime worked which amount is over and above all straight-time earnings or wages also earned during overtime worked;

(9) Total additions to or deductions from wages paid each pay period. Every employer making additions to or deductions from wages shall also maintain a record of the dates, amounts, and nature of the items which make up the total additions and deductions;

(10) Total wages paid each pay period;

(11) Date of payment and the pay period covered by payment;

(12) Employer may use symbols where names or figures are called for so long as such symbols are uniform and defined.

[Regulation 294.7.001 (part), filed 12/30/60.]

WAC 296-128-011 Special recordkeeping requirements. (1) In addition to the records required by WAC 296-128-010, employers who employ individuals as truck or bus drivers subject to the provisions of the Federal Motor Carrier Act shall maintain records indicating the base rate of pay, the overtime rate of pay, the hours worked by each employee for each type of work, and the formulas and projected work hours used to substantiate any deviation from payment on an hourly basis pursuant to WAC 296-128-012. The records shall indicate the period of time for which the base rate of pay and the overtime rate of pay are in effect.

For the purposes of this section and WAC 296-128-012, "base rate of pay" means the amount of compensation paid per hour or per unit of work in a workweek of forty hours or less. A base rate of pay shall be established in advance of the work performed and may be based on hours or work units such as mileage, performance of specified duties, or a specified percentage of the gross proceeds charged for specified work. A base rate of pay shall not be established that will result in compensation at less than the minimum wage prescribed in RCW 49.46.020. "Overtime rate of pay" means the amount of compensation paid for hours worked within the state of Washington in excess of forty hours per week and shall be at least one and one-half times the base rate of pay.

(2) The records required by this section shall be made available by the employer at the request of the department. Any current or past employee may obtain copies of the formula, the base rate of pay, the overtime rate of pay, and that employee's records. Job applicants seeking employment by the employer as truck or bus drivers subject to the provisions of the Federal Motor Carrier Act, may obtain copies of the formula, the base rate of pay, and the overtime rate of pay.

[Statutory Authority: RCW 43.22.270, 49.46.130 and 1989 c 104. 89-22-120, § 296-128-011, filed 11/1/89, effective 12/2/89.]

WAC 296-128-012 Overtime for truck and bus drivers. (1)(a) The compensation system under which a truck or bus driver subject to the provisions of the Federal Motor Carrier Act is paid shall include overtime pay at least reasonably equivalent to that required by RCW 49.46.130 for working within the state of Washington in excess of forty hours a week. To meet this requirement, an employer may, with notice to a truck or bus driver subject to the provisions of the Federal Motor Carrier Act, establish a rate of pay that is not on an hourly basis and that includes in the rate of pay compensation for overtime. An employer shall substantiate any deviation from payment on an hourly basis to the satisfaction of the department by using the following formula or an alternative formula that, at a minimum, compensates hours worked within the state of Washington in excess of forty hours per week at an overtime rate of pay and distributes the projected overtime pay over the average number of hours projected to be worked. The following formula is recommended for establishing a uniform rate of pay to compensate work that is not paid on an hourly basis and for which compensation for overtime is included:

1. Define work unit first. E.g., miles, loading, unloading, other.

2.	Average number of work units / per hour	=	Average number of work units accomplished per week / Average number of hours projected to be worked per week
3.	Weekly Base Rate	=	Number of units per hour x 40 hours x base rate of pay
4.	Weekly Overtime rate	=	Number of units per hour x number of hours over 40 x overtime rate of pay
5.	Total weekly pay	=	Weekly base rate plus weekly overtime rate
6.	Uniform rate of pay	=	Total weekly pay / Total work units

Example: A truck driver is paid on a mileage basis for a two hundred thirty mile trip performed about ten times a week. The base rate of pay is twenty cents a mile. The overtime rate of pay is thirty cents a mile. The average length of the trip is four and one-half hours.

1. 2300 mi. divided by per week / 45 hours per week = 51.1 miles per hour
2. (a) 51.1 miles/hour times 40 hours times .20/mile = $408.80
   (b) 51.1 miles/hour times 5 hours = 255.5 miles
   (c) 255.5 miles times .30/mile = $76.65
   (d) $408.80 plus $76.65 = $485.45 divided by 2300 miles = 21.1 cents mile

(b) In using a formula to determine a rate of pay, the average number of hours projected to be worked and the average number of work units accomplished per week shall reflect the actual number of hours worked and work units projected to be accomplished by persons performing the same type of work over a representative time period within the past two years consisting of at least twenty-six consecutive weeks.

(c) The department may evaluate alternative rates of pay and formulas used by employers in order to determine whether the rates of pay established under this section result in the driver receiving compensation reasonably equivalent to one and one-half times the base rate of pay for actual hours worked within the state of Washington in excess of forty hours per week.

(2) Where an employee receives a different base rate of pay depending on the type of work performed, the rate that is paid or used for hours worked within the state of Washington in excess of forty hours per week shall be at least the overtime rate of pay for the type of work in which most hours were worked.

[Statutory Authority: RCW 43.22.270, 49.46.130 and 1989 c 104. 89-22-120, § 296-128-012, filed 11/1/89, effective 12/2/89.]

WAC 296-128-015 Definitions of workday and workweek. (1) A workweek is a fixed and regularly recurring period of 168 hours or seven consecutive 24-hour periods. It may begin on any day of the week and any hour of the day, and need not coincide with a calendar week.

(2) A workday is a fixed and regularly recurring period of 24 hours. It may begin at any hour of a calendar day and must begin at the same time each calendar day.

[Regulation 294.7.001 (part), filed 12/30/60.]

WAC 296-128-020 Term for keeping records. Unless otherwise specifically authorized by the director all records required under WAC 296-128-010 shall be kept for a period of at least three years.

[Regulation 294.7.001 (part), filed 12/30/60.]

WAC 296-128-025 Place for keeping records and availability for inspection. Each employer shall keep the records required by this regulation safe and accessible at the place or places of employment or at one or more established central recordkeeping offices where such records are customarily maintained. All such records shall be open at any time to inspection and transcription or copying by the director and his duly authorized representative and to the employee, upon request for that employee's work record, at any reasonable time.

[Statutory Authority: RCW 43.22.270, 49.12.020, 49.12.091, 49.12.050, 49.46.020 and 49.46.070. 89-22-016 (Order 89-16), § 296-128-025, filed 10/24/89, effective 11/24/89; Regulation 294.7.001 (part), filed 12/30/60.]

WAC 296-128-030 Petitions for exceptions. (1) **Submission of petitions for relief.** Any employer or group of employers who, due to peculiar conditions under which he or they must operate, desires authority to maintain records in a manner other than required in this regulation, or to be relieved of preserving certain records for the period specified in the regulation, may submit a written petition to the director setting forth the authority desired and the reasons therefor.

(2) **Action on petitions.** If, on review of the petition and after completion of any necessary investigation supplementary thereto, the director shall find that the authority prayed for, if granted, will not hamper or interfere with enforcement of the provisions of the act or any regulation or orders issued thereunder, he may then grant such authority but limited by such conditions as he may determine are requisite, and subject to subsequent revocation. Where the authority granted hereunder is sought to be revoked for failure to comply with the conditions determined by the director to be requisite to its existence, the employer or groups of employers involved shall be notified in writing of the facts constituting such failure and afforded an opportunity to achieve or demonstrate compliance.

(3) **Compliance after submission of petitions.** The submission of a petition or the delay of the director in acting upon such petition shall not relieve any employer or group of employers from any obligations to comply with all the requirements of the regulations in this part applicable to him or them. However the director shall give notice of the denial of any petition with due promptness.

[Regulation 294.7.001 (part), filed 12/30/60.]

WAC 296-128-035 Payment interval. All wages due shall be paid at no longer than monthly intervals to each employee on established regular pay days. To facilitate bookkeeping, an employer may implement a regular payroll sys-

tem in which wages from up to seven days before pay day may be withheld from the pay period covered and included in the next pay period.

[Statutory Authority: RCW 43.22.270, 49.12.020, 49.12.091, 49.12.050, 49.46.020 and 49.46.070. 89-22-016 (Order 89-16), § 296-128-035, filed 10/24/89, effective 11/24/89.]

HANDICAPPED WORKERS

WAC 296-128-050 Applicability of this regulation. This regulation is issued pursuant to RCW 49.46.060, Washington minimum wage and hour law, which authorized the director of the department of labor and industries, to the extent necessary in order to prevent curtailment of opportunities for employment, to issue special certificates for employment of individuals whose earning capacity is impaired by age or physical or mental deficiency or injury at wages lower than the minimum wage applicable under RCW 49.46.020. Such certificates shall be subject to the conditions prescribed in this regulation.

[§ 1, Regulation 294.6.005, filed 12/30/60.]

WAC 296-128-055 Definition. "Handicapped worker" means an individual whose earning capacity is impaired by age or physical or mental deficiency or injury for the work he is to perform.

[§ 2, Regulation 294.6.005, filed 12/30/60.]

WAC 296-128-060 Application for certificate. (1) Application for a certificate authorizing the employment of handicapped workers shall be made upon forms made available by the director or his authorized representatives.

(2) The application shall set forth, among other things, the nature of the disability, a description of the occupation at which the handicapped worker is to be employed, and the wage the employer proposes to pay the handicapped worker per hour. The nature of the disability must be set out in detail.

(3) The application shall be signed jointly by the employer and the handicapped worker for whom such application is being made, except as otherwise authorized by the director or his authorized representative.

[§ 3, Regulation 294.6.005, filed 12/30/60.]

WAC 296-128-065 Conditions for granting a certificate. (1) If the application is in proper form and sets forth facts showing:

(a) A subminimum wage is necessary to prevent curtailment of the handicapped worker's opportunities for employment;

(b) The handicap impairs the earning capacity of the worker for the work he is to perform, a certificate may be issued.

(2) The director or his authorized representative may require the submission of additional information to that shown on the application and may require the handicapped worker to take a medical examination where it is deemed necessary in order to determine whether or not the issuance of a certificate is justified.

[§ 4, Regulation 294.6.005, filed 12/30/60.]

WAC 296-128-070 Issuance of certificate. If the application and other available information indicate that the requirements of this regulation are satisfied, the director or his authorized representative shall issue a certificate. Otherwise he shall deny a certificate. If issued, copies of the certificate shall be mailed to the employer and the handicapped worker and if denied, the employer and the handicapped worker shall be given written notice of the denial.

[§ 5, Regulation 294.6.005, filed 12/30/60.]

WAC 296-128-075 Terms of certificate. (1) A certificate shall specify, among other things, the name of the handicapped worker, the name of the employer, the occupation in which the handicapped worker is to be employed, the authorized subminimum wage rate and the period of time during which such wage rate may be paid.

(2) A certificate shall be effective for a period to be designated by the director or his authorized representative and a handicapped worker employed under such certificate may be paid subminimum wages only during the effective period of the certificate.

(3) The wage rate set in the certificate shall be fixed at a figure designed to reflect adequately the handicapped worker's earning capacity. No wage rate shall be fixed at less than 75 percent of the applicable minimum wage under RCW 49.46.020 unless, after investigation a lower rate appears to be clearly justified.

(4) Any money received by a handicapped worker by reason of any state or federal pension or compensation program for handicapped persons shall not be considered as offsetting any part of the wage or remuneration due the handicapped worker by the employer.

(5) The worker or trainee shall be paid not less than one and one-half times the regular rate for hours worked in excess of 40 in the workweek or 8 in the workday.

(6) The terms of any certificate, including the subminimum wage rate specified therein, may be amended by the director or his authorized representative upon written notice to the parties concerned, if the facts justify such amendment.

[§ 6, Regulation 294.6.005, filed 12/30/60.]

WAC 296-128-080 Renewal of certificate. Application for renewal of any certificate shall be filed in the same manner as an original application. If such application has been filed prior to the expiration date of the certificate, the certificate shall remain in effect until the application for renewal has been granted or denied.

[§ 7, Regulation 294.6.005, filed 12/30/60.]

WAC 296-128-085 Review. Any person aggrieved by any action of the director or his authorized representative taken pursuant to this regulation may, within 15 days after notice of such action has been mailed, file with the director a petition for review of the action complained of, setting forth grounds for seeking such review. If reasonable grounds exist, the director or his authorized representative may grant such review and to the extent deemed appropriate afford all interested persons an opportunity to be heard on such review.

[§ 8, Regulation 294.6.005, filed 12/30/60.]

WAC 296-128-090 Amendment of this regulation. Any person desiring revision of any of the terms of this regulation may submit in writing to the director a petition setting forth the changes desired and the reasons for proposing them. If the director believes that reasonable cause for amendment of this regulation is set forth he will schedule a hearing in accordance with RCW 49.46.080.

[§ 9, Regulation 294.6.005, filed 12/30/60.]

EMPLOYMENT OF LEARNERS

WAC 296-128-100 Authority. This regulation is promulgated in accordance with RCW 49.46.060.

[§ 1, Regulation 294.6.003, filed 3/23/60.]

WAC 296-128-105 Definitions. As used in this regulation:

(1) A "learner" is a worker whose total experience in an authorized learner occupation is less than the period of time allowed as a learning period for that occupation in a learner certificate issued pursuant to these regulations.

(2) An "experienced worker" is a worker whose total experience in an authorized learner occupation is at least equal to the period of time allowed as a learning period for that occupation in a learner certificate issued pursuant to these regulations.

(3) "Experienced worker available for employment" means an experienced worker residing within the area from which the employer customarily draws its labor supply or within a reasonable commuting distance of such area, and who is willing and able to accept employment with the employer; or an experienced worker residing outside of the area from which the employer customarily draws its labor supply, who has in fact made himself available for employment.

[§ 2, Regulation 294.6.003, filed 3/23/60.]

WAC 296-128-110 Application for learner certificate. (1) Whenever the employment of learners at wages lower than the minimum wage applicable under RCW 49.46.-020 is believed necessary to prevent curtailment of opportunities for employment by a specified employer, an application for a certificate authorizing the employment of such learners at subminimum wage rates may be filed by the employer with the director of the department of labor and industries or his authorized representative.

(2) Application must be made on the official form provided by the department and furnish all information called for on said form.

(3) Separate application must be made with respect to each establishment or place of business operated by the applicant and in which he desires to employ learners at subminimum wage rates.

[§ 3, Regulation 294.6.003, filed 3/23/60.]

WAC 296-128-115 Procedure for action upon an application. (1) Upon receipt of an application for a learner certificate or renewal of such certificate the director or his authorized representative shall consider all relevant facts and, subject to the conditions specified in WAC 296-128-120, shall issue or deny a learner certificate or, in appropriate circumstances, provide an opportunity to interested parties to present their views on the application prior to granting or denying a learner certificate.

(2) If a learner certificate is granted, notice of such fact and the terms of the certificate shall be posted at the employer's place of business for 15 days after receipt thereof and any interested person may file with the director written requests for reconsideration or review. Such application should set forth the applicant's interest in the review and the reasons he seeks review.

(3) If a learner certificate is denied, notice of such denial shall be mailed to the employer and it shall be without prejudice to the subsequent filing of an application.

[§ 4, Regulation 294.6.003, filed 3/23/60.]

WAC 296-128-120 Conditions governing issuance of learner certificates. The following conditions shall govern the issuance of a special certificate authorizing the employment of learners at subminimum wage rates:

(1) An adequate supply of qualified experienced workers is not available for employment; the experienced workers presently employed in occupations in which learners are requested, are afforded an opportunity for full time employment; learners are available for employment; and the granting of a certificate is necessary to prevent curtailment of employment opportunities.

(2) Reasonable efforts have been made to obtain experienced workers, including the placement of an order with the employment security office of the state of Washington.

(3) The issuance of a learner certificate will not tend to create unfair competitive labor cost advantages nor have the effect of impairing or depressing wage or working standards established for experienced workers for work of a like or comparable character in the industry.

(4) Abnormal labor conditions such as a strike, lock-out or other similar condition do not exist at the place of business for which a learner certificate is requested.

(5) There are no serious outstanding violations of the provisions of learner certificates previously issued to the employer, nor have there been any serious violations of the Washington Minimum Wage and Hour Act which provide reasonable grounds to believe that the terms of a certificate may not be complied with.

(6) The occupation or occupations in which learners are to receive training require a sufficient degree of skill to necessitate an appreciable training period.

(7) Learners shall be afforded every reasonable opportunity for continued employment upon completion of the learning period.

(8) Unless otherwise specified in the learner certificate, a learning program shall not exceed 480 hours of employment, and the total hours worked in any establishment by learners shall not exceed 10 percent of the total hours normally worked by experienced workers in such establishment: Provided, That where less than 10 experienced workers are employed by an employer, a learner certificate may authorized the employment of learners for a maximum of 40 hours per week under a bona fide learner program.

[§ 5, Regulation 294.6.003, filed 3/23/60.]

WAC 296-128-125 Terms and conditions of employment under learner certificates. (1) A learner certificate, if issued, shall specify, among other things:

(a) The number or proportion of learners authorized to be employed on any one day;

(b) The occupations in which learners may be employed;

(c) The subminimum wage rates permitted for each learner occupation during the authorized learning period; which shall not be less than 85 percent of the minimum wage specified in RCW 49.46.020, as it may be amended, unless otherwise specified in the certificate;

(d) The learning period for each authorized learner occupation;

(e) The effective and expiration dates of the certificate.

(2) A learner certificate may be issued for a period of not longer than one year. A renewal certificate will not be issued without a clear showing that conditions set forth in WAC 296-128-120 still prevail.

(3) Learners hired pursuant to a learner certificate prior to the date on which such certificate expires may be continued in employment at the authorized subminimum wage rate for the duration of their authorized learning period even though the certificate expired before the learning period is completed.

(4) A copy of the learner certificate shall be posted by the employer during its effective period in a conspicuous place in the department where learners are to be employed.

(5) No learner shall be hired under a learner certificate if, at the time the employment begins, experienced workers capable of equaling the performance of a worker of minimum acceptable skill are available for employment.

(6) No learner shall be hired under a learner certificate while abnormal labor conditions exist such as a strike, lockout, or other similar conditions in the place of business for which a learner certificate has been issued.

(7) The number of hours of previous employment in a learner occupation for which the learner has been hired must be deducted from the authorized learning period if within the three years immediately preceding the hiring of such learner he has been employed in the learner occupation for less than the total number of hours authorized as a learning period and shall also be deducted from the authorized learning period all hours spent in pertinent training in a vocational training school on the occupation for which the learner has been employed.

(8) No provision of any learner certificate will excuse noncompliance with higher standards applicable to learners which may be established under any other state law, federal law, or trade union agreement.

(9) Unless otherwise specified in the learner certificate a learning program shall not exceed 480 hours of employment and the total hours worked in any establishment by learners shall not exceed 10 percent of the total hours normally worked by experienced workers in such establishment: Provided, That where less than 10 experienced workers are employed by an employer a learner certificate may authorize the employment of learners for a maximum of 40 hours per week under a bona fide learner program.

[§ 6, Regulation 294.6.003, filed 3/23/60.]

WAC 296-128-130 Records to be kept by employers of learners. The director or his authorized representative may specify additional records to be kept by employers of learners as a condition to compliance with the learner certificate.

[§ 7, Regulation 294.6.003, filed 3/23/60.]

WAC 296-128-135 Amendment and revocation of learner certificate. The director may amend or revoke a learner certificate when it is necessary by reason of changes in these regulations, or where the employer has violated its terms, or where the certificate was obtained by misleading or false statements, or where changed conditions warrant it in the opinion of the director.

[§ 8, Regulation 294.6.003, filed 3/23/60.]

WAC 296-128-140 Supplemental regulations. (1) Upon application of any person or persons, representing any industry or branch thereof, or upon his own motion, the director, if he deems it advisable, may, after appropriate and timely notice to interested parties, cause a hearing to be held to determine the need for employment of learners at wages lower than the minimum wage applicable under RCW 49.46.-020 in order to prevent curtailment of employment opportunities in any industry or branch thereof; and if such need is found to exist, determine the occupations which require a learning period and the limitations as to wages, time, number, proportion, and length of learning period. Such hearing shall be held before the director or his duly authorized representative. Following such hearing the director may, by supplemental regulations, prescribe the conditions under which special certificates shall be issued for the employment of learners in such industry or branch thereof, if he finds that there is a need therefor to prevent curtailment of opportunities for employment.

(2) At such hearing the director may cause to be brought before him or his authorized representative any witness whose testimony he deems material to the subject matter before him.

[§ 9, Regulation 294.6.003, filed 3/23/60.]

WAC 296-128-145 Reconsideration and review. (1) Any person aggrieved by the action of the director or his authorized representative denying or granting a learner certificate may within 15 days after mailing of notice of such action file a written request for reconsideration with the director.

(2) A request for a reconsideration shall be accompanied by a statement of the additional evidence which the applicant believes may materially affect the decision.

(3) A request for review shall be granted where reasonable grounds are set forth in the request and if such review is granted all interested persons shall be afforded an opportunity to be heard.

[§ 10, Regulation 294.6.003, filed 3/23/60.]

WAC 296-128-150 Procedure for amendment. The director may at any time upon his own motion or upon written request of any interested persons setting forth reasonable grounds therefor amend or revoke any of the terms of this

regulation or of any supplemental regulations promulgated in accordance with WAC 296-128-140 after hearing as provided in RCW 49.46.080.

[§ 11, Regulation 294.6.003, filed 3/23/60.]

STUDENT LEARNERS

WAC 296-128-175 Applicability of the regulation. This regulation is issued in accordance with RCW 49.46.060, to provide for the employment under special certificates of student learners at wages less than the minimum provided in RCW 49.46.020, in order to prevent curtailment of opportunities for employment. Such certificates shall be subject to the terms and conditions hereinafter set forth.

[§ 1, Regulation 294.6.004, filed 3/23/60.]

WAC 296-128-180 Definitions. (1) A "student learner" is a student who is receiving instruction in an accredited school, college, or university, and who is employed on a part-time basis in a bona fide vocational training program, or in a job-training program established by an accredited school and approved by the director of the department of labor and industries.

(2) A "bona fide vocational training program" is one authorized and approved by the state board of vocational education and provides for part-time employment which may be scheduled for part of the workday or workweek, for alternating weeks or for other limited periods during the year, supplemented by and integrated with a definitely organized plan of instruction designed to teach technical knowledge or related industrial information given as a regular part of the student learner's course by an accredited school, college, or university.

[§ 2, Regulation 294.6.004, filed 3/23/60.]

WAC 296-128-185 Application for certificate. (1) Whenever the employment of a student learner at wages lower than the minimum wage applicable under RCW 49.46.-020 is believed necessary to prevent curtailment of opportunities for employment, an application for a special certificate authorizing the employment of such student learner at subminimum wages shall be filed by the employer with the director of the department of labor and industries or his authorized representative.

(2) Application shall be on forms furnished by the department of labor and industries and must be signed by the employer, an appropriate school official and the student learner. Such application shall, among other things, show: The nature of the training program; the total number of workers employed by the employer; the number and hourly wage rate of experienced workers employed in the occupation in which the student learner is to be trained; the hourly wage rate or progressive wage schedule which the employer proposes to pay the student learner; the age of the student learner; the period of employment training at subminimum wages; the number of hours of employment training a week; the number of hours of school instruction a week.

[§ 3, Regulation 294.6.004, filed 3/23/60.]

WAC 296-128-190 Procedure for action upon application. (1) Upon receipt of application for the employment of a student learner the director or his authorized representative shall either issue a special certificate or deny the application. To the extent deemed necessary the director or his authorized representative may provide an opportunity to interested persons to to be heard on the application prior to granting or denying it.

(2) If a special certificate is issued it shall be mailed to the employer and a copy of it shall be mailed to the school official who signs the application.

[§ 4, Regulation 294.6.004, filed 3/23/60.]

WAC 296-128-195 Conditions governing issuance of special student learner certificate. The following conditions must be satisfied before a special certificate may be issued authorizing employment of student learners at subminimum wages:

(1) Any training program under which the student learner will be employed must be a bona fide vocational training program as defined in WAC 296-128-180 or be a part of a job-training program established by the governing body of the school and approved by the director of the department of labor and industries.

(2) The employment of the student learner at subminimum wages must be necessary to prevent curtailment of opportunities for employment.

(3) The occupation for which the student learner is receiving preparatory training must require a sufficient degree of skill to necessitate a substantial learning period.

(4) The employment of a student learner must not have the effect of displacing a worker employed in the establishment in which the student learner is to be employed.

(5) The employment of the student learner at subminimum wages must not tend to impair or depress the wage rates or working standards established for experienced workers for work of a like or comparable nature.

(6) The issuance of such a certificate must not tend to prevent the development of apprenticeships or must not impair established apprenticeship standards in the occupation or industry involved.

[§ 5, Regulation 294.6.004, filed 3/23/60.]

WAC 296-128-200 Terms and conditions of special student learner certificate. (1) The special student learner certificate if issued shall specify among other things: (a) The name of the student learner; (b) the name and address of the employer; (c) the name of the school which provides the related school instruction; (d) the occupation in which the student is to be trained; (e) the maximum number of hours of employment training in any one week at a specified subminimum wage rate; (f) the number of hours per week in which the student is engaged in his school training program; (g) the effective and expiration dates of the certificate.

(2) The subminimum wage rate shall be not less than 75 percent of the minimum wage provided in RCW 49.46.020.

(3) Unless otherwise authorized by the director or his authorized representative the number of hours of employment training each week at subminimum wages pursuant to certificate, when added to the hours of school instruction

shall not exceed 40 hours: Provided, however, That when school is not in session on any school day or school week, the student learner may work a number of hours in addition to the weekly number of hours of employment training authorized by the certificate, provided that the hours do not exceed 8 in such day or 40 in such week.

(4) Unless otherwise authorized by the director or his authorized representative the total number of hours worked by all student learners employed by an employer shall not exceed 10 percent of the total hours worked by all regular employees of said employer in the establishment in which such student learners are employed.

[§ 6, Regulation 294.6.004, filed 3/23/60.]

WAC 296-128-205 Term of special certificate. A special student learner certificate may be issued for a period not to exceed the length of one school year unless the director finds that a longer period is justified by extraordinary circumstances.

[§ 7, Regulation 294.6.004, filed 3/23/60.]

WAC 296-128-210 Review. Any person aggrieved by the action of the director or his authorized representative in denying or granting a special student learner certificate may within 15 days after the mailing of notice of such action file a written request for review which will be granted where such request sets forth reasonable grounds therefor. To the extent the director or his authorized representative deems it necessary he shall afford all persons interested in said review an opportunity to be heard.

[§ 8, Regulation 294.6.004, filed 3/23/60.]

WAC 296-128-215 Amendment of this regulation. Any person desiring revision of any of the terms of this regulation may submit in writing to the director a petition setting forth the changes desired and the reasons for proposing them. If the director believes that reasonable cause for amendment of this regulation is set forth he will schedule a hearing in accordance with RCW 49.46.080.

[§ 9, Regulation 294.6.004, filed 3/23/60.]

APPRENTICES

WAC 296-128-225 Employment of apprentices at subminimum wages. The director or his authorized representative, to the extent necessary to prevent curtailment of employment opportunities, shall issue special certificates to employers or apprenticeship committees as defined in RCW 49.04.040 authorizing the employment of apprentices in skilled trades at wages lower than the minimum wage applicable under RCW 49.46.020, subject to the limitations and conditions set forth in this regulation.

[§ 1, Regulation 294.6.002, filed 12/30/60.]

WAC 296-128-230 Definition of apprentice. The term "apprentice" shall mean a person at least 16 years of age who is covered by a written agreement registered with the Washington state apprenticeship council providing for not less than 4,000 hours of reasonably continuous employment for such person, and for his participation in an approved schedule of work experience through employment which should be supplemented by 144 hours per year of related technical instruction.

[§ 2, Regulation 294.6.002, filed 12/30/60.]

WAC 296-128-235 Registration of apprenticeship agreement. Before an apprentice may be employed at subminimum wages, the employer or apprenticeship committee shall have submitted an apprenticeship agreement for registration with the director of apprenticeship or the apprenticeship council of the department of labor and industries.

[§ 3, Regulation 294.6.002, filed 12/30/60.]

WAC 296-128-240 Procedure for issuing certificates authorizing employment of apprentices at subminimum wages. (1) Upon being informed by the director of apprenticeship that such apprenticeship agreement has been accepted for registration in accordance with RCW 49.04.030, and that such agreement calls for employment of apprentices at subminimum wages, the director, or his authorized representative, may issue a special certificate in accordance with WAC 296-128-225. Otherwise, he shall deny the special certificate.

(2) The special certificate, if issued, shall be mailed to the employer or apprenticeship committee and a copy shall be mailed to the apprentice. If the certificate is denied, the employer or apprenticeship committee will be so notified by mail.

(3) A special certificate will not be issued where there are serious outstanding violations involving an employer for whom a special certificate is being requested, or where there are any serious outstanding violations of a certificate previously issued, or where there have been any serious violations of the act which provide reasonable grounds to conclude that the terms of a certificate may not be complied with, if issued.

[§ 4, Regulation 294.6.002, filed 12/30/60.]

WAC 296-128-245 Terms of special certificate. (1) Each special certificate shall specify the conditions and limitations under which it is granted, including the name of the apprentice, the skilled trade in which he is to be employed, the subminimum wage rates and the periods of time during which such wage rates may be paid.

(2) The terms of any special certificate, including the wages specified therein may be amended for cause.

[§ 5, Regulation 294.6.002, filed 12/30/60.]

WAC 296-128-250 Hearing procedure. The director or his authorized representative may conduct an investigation, which may include a hearing, prior to issuing or denying an application for special certificate. To the extent he deems appropriate, the director, or his authorized representative, may provide an opportunity for other interested persons to be heard prior to granting or denying an apprentice certificate.

[§ 6, Regulation 294.6.002, filed 12/30/60.]

EMPLOYMENT OF STUDENT WORKERS

WAC 296-128-275 Applicability. The regulations hereinafter set forth are issued pursuant to RCW 49.46.060 to provide for the employment by educational institutions under special certificates of student workers as learners at wages lower than the minimum wage applicable under RCW 49.46.-020. Such certificates shall be subject to the terms and conditions hereinafter set forth.

[§ 1, Regulation 294.6.001, filed 3/23/60.]

WAC 296-128-280 Definitions. As used in the regulations:

(1) A "student worker" is a student who is receiving instruction in a bona fide educational program in an educational institution and who is employed on a part-time basis by the educational institution from which the student is receiving his instruction, for the purpose of enabling the student to defray part of his school expenses.

(2) "Department" means department of labor and industries.

(3) "Director" means director of department of labor and industries.

(4) "Supervisor" means supervisor of wage and hour division of the department of labor and industries.

[§ 2, Regulation 294.6.001, filed 3/23/60.]

WAC 296-128-285 Filing applications. Whenever the employment of student workers as learners at wages lower than the minimum wage applicable under RCW 49.46.020 is believed necessary to prevent curtailment of opportunities for employment in a specified educational institution, applications for special certificates authorizing the employment of such student workers as learners at subminimum wage rates may be filed by an appropriate official of the educational institution with the director, supervisor, or duly authorized representative of the wage and hour division of the department of labor and industries on official forms furnished by the department.

[§ 3, Regulation 294.6.001, filed 3/23/60.]

WAC 296-128-290 Issuing or denying certificates. Upon receipt of an application for the employment of student workers as learners, the director or his authorized representative shall issue or deny a special certificate authorizing employment of student workers. To the extent he deems appropriate, the director or his authorized representative may provide an opportunity to other interested persons to present data and views on the application prior to granting or denying a student worker certificate. If a student worker certificate is granted, it shall be mailed to the educational institution. If a student worker certificate is denied, notice of such denial shall be mailed to the educational institution and such denial shall be without prejudice to the filing of any subsequent application.

[§ 4, Regulation 294.6.001, filed 3/23/60.]

WAC 296-128-295 Conditions governing issuance of certificates. The following conditions shall govern the issuance of a special certificate authorizing the employment of student workers as learners by an educational institution at subminimum wage rates:

(1) The employment of the student workers at subminimum wages authorized by the certificate must be necessary to prevent curtailment of opportunities for employment in a specified educational institution.

(2) The issuance of the student worker certificate will not tend to create unfair competitive labor cost advantages nor have the effect of impairing or depressing wage or working standards established for experienced workers for work of a like or comparable character in the industry or community.

(3) The occupations to be filled by the student workers shall not be in the production of goods or services which would be sold in competition with privately owned businesses, nor in enterprises operated by the educational institution in competition with privately owned businesses.

(4) There have been no serious outstanding violations of the provisions of a student workers certificate previously issued to the educational institution, nor have there been any serious violations of the act which provide reasonable grounds to conclude that the terms of a student worker certificate may not be complied with, if issued.

[§ 5, Regulation 294.6.001, filed 3/23/60.]

WAC 296-128-300 Data required on certificate. The student worker certificate, if issued, shall specify, among other things:

(1) The name and address of the educational institution employing the student workers;

(2) The occupations in which the student workers are employed;

(3) The number of student workers to be employed in any one day;

(4) The authorized subminimum wage rate to be paid for each occupation;

(5) The effective and expiration dates of the certificate.

[§ 6, Regulation 294.6.001, filed 3/23/60.]

WAC 296-128-305 Wage rate. The subminimum wage rate shall be not less than 75 percent of the minimum wage rate established by RCW 49.46.020, as it may be amended.

[§ 7, Regulation 294.6.001, filed 3/23/60.]

WAC 296-128-310 Records. In addition to any other records required by reason of the Washington Minimum Wage and Hour Act, the educational institution shall keep and maintain the following records specifically relating to student workers employed at subminimum wage rates:

(1) Each student worker employed under a student worker certificate shall be designated as such on the payroll records kept by the institution, with each student worker's occupation and rate of pay being shown.

(2) The records required including a copy of any special certificate issued, shall be kept and made available for inspection at all times for at least three years from the effective date of the certificate.

[§ 8, Regulation 294.6.001, filed 3/23/60.]

WAC 296-128-315 Amending and revoking certificates. The director of the department of labor and industries

or his authorized representative may amend the provisions of a student worker certificate or he may revoke such certificate where it is shown to his satisfaction that its provisions have not been complied with.

[§ 9, Regulation 294.6.001, filed 3/23/60.]

WAC 296-128-400 Minors. (1) **Applicability of order.** This order shall apply to all minors employed in any industry or establishment in the state of Washington who are not expressly covered by another minimum wage and welfare order issued by the industrial welfare committee, except: Minors employed:

(a) By common carrier railroads, sleeping car companies and freight or express companies subject to regulations of federal law.

(b) In agricultural labor.

(c) In domestic work or chores performed in or about private residences.

(d) In a vocational education, work experience or apprentice training program, when such program is properly supervised by school personnel or in accordance with written agreements and approved training schedules.

(e) Directly by a telephone or telegraph company. This order shall not apply to newspaper vendors and newspaper carriers.

(2) Definitions. For the purpose of this order:

(a) A "minor" is a person of either sex under the age of eighteen years.

(b) The term "employee" shall mean any minor who is employed to work in any industry or establishment in the state of Washington other than those expressly excluded by the foregoing paragraphs.

(c) The term "employer" shall mean any person, association, corporation, co-partnership, or municipal corporation, engaged in any industry or establishment covered by this order and who (or which) employs any minor covered by this order.

(d) The term "agricultural labor" shall mean employment.

(i) On a farm, in the employ of any person in connection with the cultivating of the soil, or in connection with raising or harvesting any agricultural or horticultural commodity, including raising, shearing, feeding, caring for, training and management of livestock, bees, poultry, and furbearing animals and wildlife, or in the employ of the owner or tenant or other operator of a farm in connection with the operation, management, conservation, improvement, or maintenance of such farm and its tools and equipment; or

(ii) In handling, planting, packing, packaging, grading, storing, or delivering to storage or to a market or to a carrier for transportation to market, any agricultural or horticultural commodity; but only if such service is performed as an incident to ordinary farming operations, or, in the case of fruits and vegetables in their raw and natural state, as an incident to the preparation of such fruits and vegetables for market. The provisions of this paragraph shall not be deemed to be applicable with respect to services performed in connection with commercial canning or commercial freezing or any other commercial processing which changes the character of the product from its raw and natural state or in connection with any agricultural or horticultural commodity after its delivery to a terminal market for distribution for consumption.

(3) **Minimum wages.**

(a) Minimum wages for all minors covered by this order, in the state of Washington shall be fifty cents per hour, regardless of the manner in which they are computed, except when another order (or orders) issued by the industrial welfare committee of the state of Washington provides a different minimum.

(b) Whenever the administrator of the wage and hour division of the United States department of labor shall issue a certificate or certificates permitting the employment of learners, apprentices, messengers, and handicapped workers, at wage rates below the minimums herein fixed, the payment of wages in accordance with such permits shall not constitute a violation of this order.

(4) **Hours.**

(a) No minor shall be employed more than five hours without a meal period, on the employee's time, of at least thirty minutes.

(b) There shall be a rest period on the employer's time of ten minutes in every four-hour period of employment.

(c) Minors 14 and 15 years of age shall not be employed more than eight hours in any one day or six days in any one week. In computing the hours, one-half the total attendance hours in school shall be included. When school is not in session said minors shall not be employed more than forty hours in any one week.

(d) Minors 16 and 17 years of age shall not be employed more than eight hours in any one day or six days in any one week except in seasonal industries or in cases of emergency.

(e) Minors 14 and 15 years of age shall not be permitted to work after the hours of 7:00 p.m. or before 6 a.m. (pacific standard time), unless such employment is specifically authorized by the terms of this order, or by a permit specifically authorizing such employment issued by the industrial welfare committee of the state department of labor and industries, or its duly designated agent for the issuance of such permit.

(f) Minor boys 14 and 15 years of age may be issued permits to work in approved amusement industries not more than six days a week and not later than 7:00 p.m. (pacific standard time).

(g) Minors 16 and 17 years of age attending school may be employed after 7:00 p.m. (pacific standard time) for such hours not exceeding eight hours in any one day, and in such employments, as shall be specifically authorized in the individual permits issued to each minor, when upon investigation by the supervisor of women and minors in industry the conditions of employment are found not detrimental to the welfare of the minors or their school program. Such permits shall not be issued to girls unless satisfactory assurance is given the industrial welfare committee of the state department of labor and industries or its authorized agent that such minors are to be safely conveyed to their homes.

(5) **Work permits and proof of age certificates.**

(a) No minor shall be employed in any occupation covered by this order unless the employer has on file during the period of employment an unexpired work certificate or permit issued by the industrial welfare committee of the state department of labor and industries or its duly designated agent for the issuance of such permit. Such permit will not be

issued except upon presentation of such evidence of age as is required by the industrial welfare committee.

(b) The issuance of a certificate or permit to work shall not authorize or excuse a violation of the state of Washington compulsory school attendance law, and shall not be issued to any minor legally required to attend school when school is in session except with the approval of the school authorities.

(6) **Employment prohibited to all minors.**

(a) No minor shall be employed in any occupation which the state department of labor and industries, through its industrial welfare committee, shall upon due notice and hearing find and by order declare to be particularly hazardous for the employment of minors under the ages specified in such order as detrimental to their health or morals.

(b) No minor shall be permitted to work in any of the following occupations:

(i) In any place where intoxicating liquor is served in the same room.

(ii) As driver or helper on state licensed motor vehicles in traffic congested areas.

(iii) In operating, tending or in dangerous proximity to dangerous power driven machinery.

(iv) In connection with the commercial operation of a 35 millimeter projection machine in a motion picture theatre or public building.

(v) To give signals to engineers in logging operations, or to receive and forward signals.

(vi) As an engineer, or within dangerous proximity to any cables, rigging or hazardous machinery.

(7) **Employment prohibited to all minor girls.** No minor girl shall be employed as:

(a) A shaker in a laundry, except on hand towels, handkerchiefs, napkins and similar small articles.

(b) In or in connection with a barber shop.

(c) A canvasser or peddler from house to house.

(d) An elevator operator.

(e) A clerk selling cigars or tobacco.

(f) A hotel messenger.

(g) A cabaret performer.

(h) In shooting galleries, penny arcades, bowling alleys.

(i) A public messenger (i.e., one whose services are available to the public for hire), except that girls 16 and 17 years of age will be permitted as building messengers in buildings within a radius of three blocks from one another.

(8) **Employment entirely prohibited to minors under 16 years of age.** Minors under sixteen years of age shall not be permitted to operate machinery in connection with processing or manufacturing plants.

(9) **Employments prohibited to minors under 14 years of age.** Minors under fourteen years of age shall not be employed in the following occupations unless such employment is specifically authorized by a permit issued by a judge of the superior court of the state of Washington:

(a) In stock room work in warehouses.

(b) As clerks in mercantile establishments.

(c) In offices as errand or office maintenance workers.

(d) In cafes as bus boys or dishwashers or helpers.

(e) As service station attendants.

(f) In other occupations which the industrial welfare committee, after due notice and hearing, shall have determined to be hazardous or detrimental to the welfare of the minor.

(10) **Employment of minors 14 to 18 years of age.** Minors 14 to 18 years of age may be employed in any occupation or industry except where such employment is expressly prohibited by this order or by statute of the state of Washington, provided that all the conditions and requirements of this order are complied with.

(11) **Working conditions.**

(a) All places where minors are employed shall be maintained in a safe and sanitary condition. The requirements for safety, sanitation and first aid shall be in conformity with the safety standards, rules and regulations as adopted by the division of safety of the department of labor and industries.

(b) Every room in which minors are employed shall be adequately heated and ventilated, and supplied with adequate natural or artificial light in accordance with the general safety standards of the department of labor and industries.

(c) Each such room shall be provided with a smooth, tight floor, which can be kept clean and sanitary. Where wet processes are employed, the floors must be adequately drained so that there will be no unreasonable depth of liquid at any point. Where floors are wet, wooden racks or grating of an adequate height shall be provided at such points.

(d) Toilet rooms shall be provided for women and female minors sufficiently separated and isolated to insure privacy, which rooms shall be maintained in a sanitary condition, adequately lighted, heated and ventilated. A sufficient number of wash bowls or sink space shall be located either within the toilet room or adjacent to the toilet room. Any wash bowls or sinks not so located shall be installed in an approved location. Sufficient soap and either individual or paper towels shall be provided.

(e) Employers shall provide for adequate keeping of employee's outer clothing during working hours, and for their work clothes during nonworking hours. When the occupation requires a change of clothing, a suitable space adequately heated shall be provided where employees may make such change in privacy.

(f)(i) A suitable rest room for women and female minors shall be provided, and shall be properly ventilated and heated.

(ii) An adequate cloak room shall be provided.

(iii) An adequate lunch room furnished with tables and chairs, and facilities for heating water shall be provided: Provided, however, That where less than ten women and female minors are regularly employed, the supervisor of women and minors in industry, upon application and showing, may permit a modified compliance with the foregoing part of this section or any part of the same.

(g) No female minor shall be required or permitted to lift or carry an excessive weight.

(h) No female minor shall be knowingly employed for a period of four weeks before confinement for pregnancy or four weeks thereafter.

(12) **Records.** Records showing the name of minors employed, dates of employment, wages paid and the hours worked by them, shall be kept by the employer and available for inspection by the representatives of the industrial welfare committee of the state department of labor and industries at all reasonable times.

(13) **Posting of order.** The employer shall post a copy of this order in all places where minor workers are employed.

(14) **Separability.** If the application of any provision of this order, or any section, subsection, subdivision, sentence, clause, phrase, word or portion of this order shall be held invalid or unconstitutional, the remaining provisions thereof shall not be affected thereby but shall continue to be given full force and effect as if the part so held invalid or unconstitutional had not been included therein.

(15) **Penalties.** The supervisor of women and minors in industry shall investigate the complaint of any individual alleging that this order has been violated. Any person employing a minor in violation of this order shall upon conviction thereof be punished in accordance with the applicable laws of the state of Washington, RCW 49.12.170, now states as follows: "Any person employing a woman or minor for whom a minimum wage or standard conditions of labor have been specified, at less than said minimum wage, or under conditions of labor prohibited by order of the committee; or violating any other of the provisions of RCW 49.12.010 through 49.12.180, shall be deemed guilty of a misdemeanor, and shall, upon conviction thereof, be punished by a fine of not less than twenty-five dollars nor more than one hundred dollars."

[Minimum Wage and Welfare Order No. 49, filed 3/23/60.]

WAC 296-128-500 Purpose. This regulation is adopted in accordance with chapter 49.46 RCW to define the terms "bona fide executive, administrative, or professional capacity or in the capacity of outside salesman," to define salary basis and to establish a procedure for computing overtime pay.

An employee who meets the definitions of executive, administrative, or professional and who is paid on a salary basis (except as provided for in WAC 296-128-530(5)) is considered exempt from the requirements of chapter 49.46 RCW. Payment of a salary does not in and of itself exempt a worker from the minimum wage and overtime requirements.

[Statutory Authority: RCW 49.46.005, 49.46.010, 49.46.120, and chapter 49.46 RCW. 03-03-109, § 296-128-500, filed 1/21/03, effective 2/21/03; Order 76-5, § 296-128-500, filed 2/24/76.]

WAC 296-128-510 Executive. The term "individual employed in a bona fide executive . . . capacity" in RCW 49.46.010 (5)(c) shall mean any employee:

(1) Whose primary duty consists of the management of the enterprise in which he is employed or of a customarily recognized department or subdivision thereof; and

(2) Who customarily and regularly directs the work of two or more other employees therein; and

(3) Who has the authority to hire or fire other employees or whose suggestions and recommendations as to the hiring or firing and as to the advancement and promotion or any other change of status of other employees will be given particular weight; and

(4) Who customarily and regularly exercises discretionary powers; and

(5) Who does not devote more than 20 percent, or, in the case of an employee of a retail or service establishment who does not devote as much as 40 percent, of his hours worked in the work week to activities which are not directly and closely related to the performance of the work described in paragraphs (1) through (4) of this section: Provided, That this paragraph (5) shall not apply in the case of an employee who is in sole charge of an independent establishment or a physically separated branch establishment, or who owns at least a 20 percent interest in the enterprise in which he is employed; and

(6) Who is compensated for his services on a salary basis at a rate of not less than $155 per week exclusive of board, lodging, and other facilities: Provided, That an employee who is compensated on a salary rate of not less $250 per week (exclusive of board, lodging, or other facilities), and whose primary duty consists of the management of the enterprise in which he is employed or of a customarily recognized department or subdivision thereof, and includes the customary and regular direction of the work of two or more other employees therein, shall be deemed to meet all of the requirements of this section.

[Order 76-5, § 296-128-510, filed 2/24/76.]

WAC 296-128-520 Administrative. The term "individual employed in a bona fide . . . administrative . . . capacity" in RCW 49.46.010 (5)(c) shall mean any employee:

(1) Whose primary duty consists of the performance of office or non-manual field work directly related to management policies or general business operations of his employer or his employer's customers; or

(2) The performance of functions in the administration of a school system, or educational establishment or institution, or of a department or subdivision thereof, in work directly related to the academic instruction or training carried on therein; and

(3) Who customarily and regularly exercises discretion and independent judgment; and

(a) Who regularly and directly assists a proprietor, or an employee employed in a bona fide executive or administrative capacity (as such terms are defined in this regulation), or

(b) Who performs under only general supervision work along specialized or technical lines requiring special training, experience or knowledge, or

(c) Who executes under only general supervision special assignments and tasks; and

(4) Who does not devote more than 20 percent, or, in the case of an employee of a retail or service establishment who does not devote as much as 40 percent of his hours worked in the work week to activities which are not directly and closely related to the performance of the work described in paragraphs (1) through (3) of this section; and

(a) Who is compensated for his services on a salary or fee basis at a rate of not less than $155 per week exclusive of board, lodging, or other facilities; or

(b) Who, in the case of academic administrative personnel is compensated for his services as required by paragraph (4)(a) of this section, or on a salary basis which is at least equal to the entrance salary for teachers in the school system, educational establishment, or institution by which he is employed: Provided, That an employee who is compensated on a salary or fee basis at a rate of not less than $250 per week (exclusive of board, lodging, or other facilities), and whose primary duty consists of the performance of office or non-manual work directly related to management policies or gen-

eral business operations of his employer or his employer's customers; which includes work requiring the exercise of discretion and independent judgment, shall be deemed to meet all of the requirements of this section.

[Order 76-5, § 296-128-520, filed 2/24/76.]

WAC 296-128-530 Professional. The term "individual employed in a bona fide . . . professional capacity" in RCW 49.46.010 (5)(c) shall mean any employee:

(1) Whose primary duty consists of the performance of work:

(a) Requiring knowledge of an advanced type in a field of science or learning customarily acquired by a prolonged course of specialized intellectual instruction and study, as distinguished from a general academic education and from an apprenticeship, and from training in the performance of routine mental, manual, or physical processes, or

(b) Original and creative in character in a recognized field of artistic endeavor (as opposed to work which can be produced by a person endowed with general manual or intellectual ability and training), and the result of which depends primarily on the intention, imagination, or talent of the employee; or

(c) Teaching, tutoring, instructing, or lecturing in the activity of imparting knowledge and who is employed and engaged in this activity as a teacher in the school system or educational establishment or institution by which he is employed; and

(2) Whose work requires the consistent exercise of discretion and judgment in its performance; and

(3) Whose work is predominantly intellectual and varied in character (as opposed to routine mental, manual, mechanical or physical work) and is of such a character that the output produced or the result accomplished cannot be standardized in relation to a given period of time; and

(4) Who does not devote more than 20 percent of his hours worked in the work week to activities which are not an essential part of and necessarily incident to the work described in paragraphs (1) through (3) of this section; and

(5) Who is compensated for his services on a salary or fee basis at a rate of not less than $170 per week exclusive of board, lodging, or facilities: Provided, That this paragraph (5) shall not apply in the case of an employee who is the holder of a valid license or certificate permitting the practice of law, medicine, or dentistry and who is actually engaged in the practice thereof: Provided, That an employee who is compensated on a salary or fee basis at a rate of not less than $250 per week (exclusive of board, lodging, or other facilities), and whose primary duty consists of the performance of work either requiring knowledge of an advanced type in a field of science or learning, which includes work requiring the consistent exercise of discretion and judgment, or requiring invention, imagination, or talent in a recognized field of artistic endeavor, shall be deemed to meet all of the requirements of this section.

[Order 76-5, § 296-128-530, filed 2/24/76.]

WAC 296-128-532 Deductions for salaried, exempt employees. (1) **When does this section apply?** This section applies to any employee who is paid on a salary basis and who meets the definitions of executive, administrative, or professional.

(2) **What does salary basis mean?** Salary is where an employee regularly receives for each pay period of one week or longer (but not to exceed one month) a predetermined monetary amount (the salary) consisting of all or part of his or her compensation, which amount will not be less than required to be paid pursuant to WAC 296-128-510 through 296-128-530. The salary shall not be subject to deduction because of variations in the quantity or quality of the work performed, except as provided in this section. Under RCW 49.46.130 (2)(a), salaried employees may receive additional compensation or paid time off and still be considered exempt.

(3) **When are deductions from salary allowed?**

(a) If the employee performs no work in a particular week, regardless of the circumstances, the employer may deduct for the entire week.

(b) When the employee takes at least a whole day off for personal reasons other than sickness or accident, the employer may deduct in full day increments.

(c) Deductions for absences due to sickness or disability may be made in full day increments if the deduction is made according to the employer's bona fide plan, policy or practice of providing paid sick and disability leave (other than industrial accidents or disability).

(i) Deductions are permitted when either leave is exhausted or the employee has not yet qualified under the plan.

(ii) Deductions are permitted even if an employee receives compensation under that plan or under workers' compensation laws.

(d) When an employee is eligible for the federal Family and Medical Leave Act 29 U.S.C. Sec. 2611 et seq., deductions may be made for partial day absences due to leave taken according to that law and the applicable provisions in chapter 49.78 RCW.

(e) In the first and final week of employment, an employee's salary may be prorated for the actual days worked.

(f) Deductions are allowed for disciplinary absences that are imposed for violations of safety rules of major significance. This includes only those relating to the prevention of serious danger to the plant, the public, or other employees, such as rules prohibiting smoking in explosive plants or around hazardous or other flammable materials.

(g) Deductions are allowed when authorized under RCW 49.48.010, 49.52.060, or WAC 296-126-025.

(4) **What are improper deductions from salary?**

(a) Deductions are not permitted for partial days of work, except as permitted by subsection (3)(d) of this section or by WAC 296-128-533.

(b) Deductions are not permitted for lack of work for any amount of time less than a full week.

(c) Deductions are not permitted when the employee participates in jury duty, attendance as a witness, or temporary military leave if the employee performs any work during that week. The employer may, however, offset any amounts received by an employee as jury or witness fees or military pay.

(d) Deductions are not permitted for absences due to sickness or disability if the employer does not have a bona

fide plan, policy or practice in place for sick or disability leave.

(e) Any other deductions not allowed under subsection (3) of this section.

(5) **Is a "window of correction" permitted?** A limited window of correction will be permitted when an improper deduction is shown to be infrequent and inadvertent and the employer immediately begins taking corrective steps to promptly resolve the improper deduction when brought to the attention of the supervisor or other appropriate representative of the employer. Such corrections will be allowed only to the extent that the deduction is not due to lack of work or part of a pattern of the same or substantially similar deductions.

(6) **What deductions may be made from leave banks?**

(a) Deductions may be made from compensatory time in any increment.

(b) Deductions may be made from bona fide leave banks in partial or full day increments. However, partial day deductions may be made only on the express or implied request of the employee for time off from work. Leave bank deductions may not be made for less than one hour.

A "bona fide leave bank" is a benefit provided to employees in the case of absence from work due to sickness or personal time off, including vacation. It must be in writing and contained in contract or agreement, or in a written policy that is distributed to employees. A leave bank policy, or a leave bank provision in a contract or agreement, is not "bona fide" if it is used as a subterfuge to circumvent or evade the requirements of this regulation.

(c) When leave banks are exhausted, deductions from salary may not be made, except as permitted in subsection (3) of this section.

[Statutory Authority: RCW 49.46.005, 49.46.010, 49.46.120, and chapter 49.46 RCW. 03-03-109, § 296-128-532, filed 1/21/03, effective 2/21/03.]

WAC 296-128-533 Public employees. (1) **How do the provisions specified in WAC 296-128-532 affect public employees?** WAC 296-128-532 (1) through (5) is applicable to public employees, except that deductions from salary or leave banks are permitted in the following additional circumstances.

(a) **Deductions from salary for partial day absences:** A public employee who otherwise meets the requirements of WAC 296-128-532 will not be disqualified from the executive, administrative, or professional exemptions on the basis that such public employee is paid according to a pay system that:

(i) Is established by statute, ordinance, or regulation, or by a policy or practice established according to principles of public accountability, under which the public employee accrues sick or personal leave (annual, vacation, etc.); and

(ii) Permits the public employee's pay to be reduced or the public employee to be placed on leave without pay for absences for personal reasons or because of illness or injury of less than one work day when accrued leave is not used by a public employee.

(b) **Deductions from leave banks:** Deductions may be made from a public employee's accrued leave banks in any increment in accordance with any statute, ordinance, or regulation, or by a policy or practice established according to principles of public accountability.

(c) **Deductions for furlough:** Deductions from the salary of a public employee for absences where authorized by law due to a budget-required leave of absence will not disqualify the public employee from being paid on a "salary basis" except in the workweek in that the absence occurs and for which the public employee's pay is accordingly reduced.

(2) **What does "public employee" mean?** Public employee means an employee directly employed by a county, incorporated city or town, municipal corporation, state agency, institution of higher education, political subdivision or other public agency and includes any department, bureau, office, board, commission or institution of such public entities.

[Statutory Authority: RCW 49.46.005, 49.46.010, 49.46.120, and chapter 49.46 RCW. 03-03-109, § 296-128-533, filed 1/21/03, effective 2/21/03.]

WAC 296-128-535 Are professional computer employees exempt from the Washington Minimum Wage Act? (1) Any employee who is a computer system analyst, computer programmer, software engineer, software developer or other similarly skilled worker will be considered a "professional employee" and will be exempt from the minimum wage and overtime provisions of the Washington Minimum Wage Act if:

(a) Their primary duty is of one of the following:

(i) Applying systems analysis techniques and procedures to determine hardware, software, or system functional specifications for any user of such services; or

(ii) Following user or system design specifications to design, develop, document, analyze, create, test or modify any computer system, application or program, including prototypes; or

(iii) Designing, documenting, testing, creating or modifying computer systems, applications or programs for machine operation systems; or

(iv) Any combination of the above primary duties whose performance requires the same skill level; and

(b) Their rate of pay is at least $27.63 per hour.

(2) **This professional exemption only applies to** highly skilled employees who:

(a) Possess a high degree of theoretical knowledge and understanding of computer system analysis, programming and software engineering; and

(b) Have the ability to practically apply that theoretical knowledge and understanding to highly specialized computer fields; and

(c) Generally attain the necessary level of expertise and skill to qualify for an exemption through a combination of education and experience in the field; and

(d) Consistently exercise discretion and judgment in the application of their special knowledge as opposed to performing purely mechanical or routine tasks; and

(e) Engage in work that is predominantly intellectual and inherently varied in character as opposed to work that is routinely mental, manual, mechanical, or physical.

(3) While many employees who qualify for this exemption hold a bachelor's or higher degree, **no degree is required for this exemption.**

(4) This professional exemption **does not apply to:**

(a) Trainees or employees in entry level positions learning to become proficient in computer systems analysis, programming and software engineering; or

(b) Employees in computer systems analysis, programming and software engineering positions who have not attained a level of skill and expertise which allows them to generally work independently and without close supervision; or

(c) Employees engaged in the operation of computers; or

(d) Employees engaged in the manufacture, repair or maintenance of computer hardware and related equipment; or

(e) Employees covered by a collective bargaining agreement.

[Statutory Authority: RCW 49.46.010 (5)(c). 98-02-027, § 296-128-535, filed 12/31/97, effective 2/1/98.]

WAC 296-128-540 Outside salesman. The term "individual employed in the capacity of outside salesman" in RCW 49.46.010 (5)(c) shall mean any employee:

(1) Who is employed for the purpose of and who is customarily and regularly engaged away from his employer's place or places of business, as well as on the premises (where the employee regulates his own hours and the employer has no control over the total number of hours worked) in the following alternative activities:

(a) In making sales; including any sale, exchange, contract to sell, consignment for sale, shipment for sale or other disposition; or

(b) In obtaining orders or contracts for services or for the use of facilities for which a consideration will be paid by the client or customer; or

(c) In demonstrating products or equipment for sale; or

(d) In the sale of services and performance of the service sold when the compensation to the employee is computed on a commission basis; and

(2) Whose hours of work of a nature other than that described in (1)(a), (b), (c) and (d) of this section do not exceed 20 percent of the hours worked in the work week by nonexempt employees of the employer: Provided, That work performed incidental to and in conjunction with the employee's own outside sales or solicitations, including incidental deliveries and collections, shall not be regarded as nonexempt work; and

(3) Who is compensated by the employer on a guaranteed salary, commission or fee basis and who is advised of his status as "outside salesman."

[Order 76-5, § 296-128-540, filed 2/24/76.]

WAC 296-128-550 Regular rate of pay. The regular rate of pay shall be the hourly rate at which the employee is being paid, but may not be less than the established minimum wage rate. Employees who are compensated on a salary, commission, piece rate or percentage basis, rather than an hourly wage rate, unless specifically exempt, are entitled to one and one-half times the regular rate of pay for all hours worked in excess of 40 per week. The overtime may be paid at one and one-half times the piecework rate during the overtime period, or the regular rate of pay may be determined by dividing the amount of compensation received per week by the total number of hours worked during that week. The employee is entitled to one and one-half times the regular rate arrived at for all hours worked in excess of 40 per week.

[Order 76-5, § 296-128-550, filed 2/24/76.]

WAC 296-128-560 Compensating time off in lieu of overtime pay. The provisions of chapter 49.46 RCW requiring one and one-half times the regular rate of pay for hours worked in excess of 40 per week does not apply to any person who requests compensating time off in lieu of overtime pay. Therefore, compensating time may be as agreed upon by the employer and the individual employee at the request of the employee, but may not be imposed by the employer in lieu of overtime pay upon any employee who has not so requested such compensating time off.

[Order 76-5, § 296-128-560, filed 2/24/76.]

Chapter 296-130 WAC
FAMILY CARE

WAC

296-130-010	Purpose.
296-130-020	Definitions.
296-130-030	Employee rights.
296-130-035	Prohibited action.
296-130-040	Employee complaints.
296-130-050	Posting.
296-130-060	Notices of infraction.
296-130-065	Service on employers.
296-130-070	Appeal of infraction notice.
296-130-080	Penalty assessment.
296-130-100	Collective bargaining not impaired.

DISPOSITION OF SECTIONS FORMERLY CODIFIED IN THIS CHAPTER

296-130-500	Collective bargaining not impaired. [Statutory Authority: RCW 43.22.270 and 1988 c 236. 88-18-044 (Order 88-20), § 296-130-500, filed 8/31/88.] Repealed by 03-03-010, filed 1/6/03, effective 1/6/03. Statutory Authority: RCW 49.12.033, 49.12.280, 49.12.285, 43.22.270, 2002 c 243, and chapters 49.12 and 43.22 RCW. Later promulgation, see WAC 296-130-100.

WAC 296-130-010 Purpose. It is in the public interest for employers to accommodate employees by providing reasonable leaves from work for family reasons. This chapter serves to establish a minimum standard allowing an employee to use the employee's sick leave or other paid time off to care for a sick family member.

[Statutory Authority: RCW 49.12.033, 49.12.280, 49.12.285, 43.22.270, 2002 c 243, and chapters 49.12 and 43.22 RCW. 03-03-010, § 296-130-010, filed 1/6/03, effective 1/6/03. Statutory Authority: RCW 43.22.270 and 1988 c 236. 88-18-044 (Order 88-20), § 296-130-010, filed 8/31/88.]

WAC 296-130-020 Definitions. (1) "Employer" means any person, firm, corporation, partnership, business trust, legal representative, or other business entity which engages in any business, industry, profession, or activity in this state and employs one or more employees. Employer also includes the state, any state institution, any state agency, political subdivisions of the state, and any municipal corporation or quasi-municipal corporation.

(2) "Employee" means a worker who is employed in the business of an employer. "Employee," for the purposes of this chapter, also includes workers performing in an executive, administrative, professional, or outside sales capacity.

(3) "Employ" means to engage, suffer, or permit to work.

(4) "Child" means a biological, adopted, or foster child, a stepchild, a legal ward, or a child of a person standing *in loco parentis* who is:

(a) Under eighteen years of age; or

(b) Eighteen years of age or older and incapable of self-care because of a mental or physical disability.

(5) "Grandparent" means a parent of a parent of an employee.

(6) "Parent" means a biological parent of an employee or an individual who stood *in loco parentis* to an employee when the employee was a child.

(7) "Parent-in-law" means a parent of the spouse of an employee.

(8) "Sick leave or other paid time off" means time allowed under the terms of an appropriate collective bargaining agreement or employer policy, as applicable, to an employee for illness, vacation, and personal holiday. It does not include any benefit which includes leave granted by short-term or long-term disability plans or policies.

(9) "Spouse" means a husband or wife, as the case may be.

(10) "Health condition that requires treatment or supervision" includes:

(a) Any medical condition requiring treatment or medication that the child cannot self administer;

(b) Any medical or mental health condition which would endanger the child's safety or recovery without the presence of a parent or guardian; or

(c) Any condition warranting treatment or preventive health care such as physical, dental, optical or immunization services, when a parent must be present to authorize and when sick leave may otherwise be used for the employee's preventive health care.

(11) "Serious health condition" means an illness, injury, impairment, or physical or mental condition that involves any period of incapacity or treatment connected with inpatient care (i.e., an overnight stay) in a hospital, hospice, or residential medical care facility, and any period of incapacity or subsequent treatment or recovery in connection with such inpatient care; or that involves continuing treatment by or under the supervision of a health care provider or a provider of health care services and which includes any period of incapacity (i.e., inability to work, attend school or perform other regular daily activities).

(12) "Emergency condition" means a health condition that is a sudden, generally unexpected occurrence or set of circumstances related to one's health demanding immediate action, and is typically very short term in nature.

(13) "Incapable of self-care" means that the individual requires active assistance or supervision to provide daily self-care in several of the "activities of daily living" (ADLs) or "instrumental activities of daily living" (IADLs). Activities of daily living include adaptive activities such as caring appropriately for one's grooming and hygiene, bathing, dressing and eating. Instrumental activities of daily living include cooking, cleaning, shopping, taking public transportation, paying bills, maintaining a residence, using telephones and directories, using a post office, etc.

(14) "Physical or mental disability" means a physical or mental impairment that limits one or more activities of daily living or instrumental activities of daily living.

(15) "Infraction" means an alleged violation of RCW 49.12.270 through 49.12.295 as cited by the department.

(16) "Administrative law judge" means any person appointed by the chief administrative law judge, as defined in RCW 34.12.020(2) to preside at contested cases convened under RCW 49.12.270 through 49.12.295.

(17) "Department" means the department of labor and industries.

[Statutory Authority: RCW 49.12.033, 49.12.280, 49.12.285, 43.22.270, 2002 c 243, and chapters 49.12 and 43.22 RCW. 03-03-010, § 296-130-020, filed 1/6/03, effective 1/6/03. Statutory Authority: RCW 43.22.270 and 1988 c 236. 88-18-044 (Order 88-20), § 296-130-020, filed 8/31/88.]

WAC 296-130-030 Employee rights. (1) If, under the terms of a collective bargaining agreement or employer policy applicable to an employee, the employee is entitled to sick leave or other paid time off, then an employer must allow an employee to use any or all of the employee's choice of sick leave or other paid time off to care for:

(a) A child of the employee with a health condition as defined in WAC 296-130-020(10); or

(b) A spouse, parent, parent-in-law, or grandparent of the employee who has a serious health condition or emergency condition, also defined in WAC 296-130-020 (11) and (12).

(2) An employee may not take leave until it has been earned. The employee taking leave under the circumstances described in this section must comply with the terms of the collective bargaining agreement or employer policy applicable to the leave, except for any terms relating to the choice of leave. Use of leave other than sick leave or other paid time off to care for a child, spouse, parent, parent-in-law, or grandparent under the circumstances described in this section shall be governed by the terms of the appropriate collective bargaining agreement or employer policy, as applicable.

Note: Many employers combine paid leave categories such as sick leave and vacation leave, often described as "paid time off" or PTO. Such PTO allows employees the choice as to their use of this leave, thereby maintaining the intent of this chapter. In addition, employers may require employees to use PTO (provided it may be used for any purpose) as a prerequisite to using leave designated for a specific purpose, such as an extended illness leave, without violating this chapter, provided other leave is available for employees to use to care for sick family members on the same terms that it is available for an employee's health condition.

[Statutory Authority: RCW 49.12.033, 49.12.280, 49.12.285, 43.22.270, 2002 c 243, and chapters 49.12 and 43.22 RCW. 03-03-010, § 296-130-030, filed 1/6/03, effective 1/6/03. Statutory Authority: RCW 43.22.270 and 1988 c 236. 88-18-044 (Order 88-20), § 296-130-030, filed 8/31/88.]

WAC 296-130-035 Prohibited action. An employer must not discharge, threaten to discharge, demote, suspend, discipline, or otherwise discriminate against an employee because the employee:

(1) Has exercised, or attempted to exercise, any right provided under RCW 49.12.270 through 49.12.295; or

(2) Has filed a complaint, testified, or assisted in any proceeding under RCW 49.12.270 through 49.12.295.

[Statutory Authority: RCW 49.12.033, 49.12.280, 49.12.285, 43.22.270, 2002 c 243, and chapters 49.12 and 43.22 RCW. 03-03-010, § 296-130-035,

filed 1/6/03, effective 1/6/03. Statutory Authority: RCW 43.22.270 and 1988 c 236. 88-23-117 (Order 88-29), § 296-130-035, filed 11/23/88.]

WAC 296-130-040 Employee complaints. (1) An employee who believes that his or her employer has not complied with RCW 49.12.270 through 49.12.295, or this chapter, may file a complaint with the department within six months of the alleged violation. The complaint should contain the following:

(a) The name and address of the employee making the complaint;

(b) The name, address, and telephone number of the employer against whom the complaint is made; and

(c) A statement of the specific fact which constitutes the alleged violation, including the date(s) on which the alleged violation occurred.

(2) Upon receipt of a complaint, the department will forward written notice of the complaint to the employer, along with a warning of prohibited actions as stated in WAC 296-130-035.

(3) The department may investigate any complaint it deems appropriate. If the department determines that a violation of this chapter has occurred, it may issue a notice of infraction pursuant to WAC 296-130-060.

[Statutory Authority: RCW 49.12.033, 49.12.280, 49.12.285, 43.22.270, 2002 c 243, and chapters 49.12 and 43.22 RCW. 03-03-010, § 296-130-040, filed 1/6/03, effective 1/6/03. Statutory Authority: RCW 43.22.270 and 1988 c 236. 88-18-044 (Order 88-20), § 296-130-040, filed 8/31/88.]

WAC 296-130-050 Posting. (1) The department will furnish each employer a poster describing an employee's rights and an employer's obligations provided in this chapter.

(2) The employer must keep posted a current edition department poster stipulating the provisions of this chapter. The employer must display this poster in a conspicuous place.

(3) The employer must post its leave policies, if any, in a conspicuous place accessible to the employees at the employer's place of business.

(4) The posting requirement for employees whose leave policies are specified by individual contracts may be satisfied by stating that leave for such employees will be governed by the terms of such contracts.

(5) Employers with informal leave policies which are established on a case-by-case basis may satisfy the posting requirement by posting a statement explaining that policy.

[Statutory Authority: RCW 49.12.033, 49.12.280, 49.12.285, 43.22.270, 2002 c 243, and chapters 49.12 and 43.22 RCW. 03-03-010, § 296-130-050, filed 1/6/03, effective 1/6/03. Statutory Authority: RCW 43.22.270 and 1988 c 236. 88-18-044 (Order 88-20), § 296-130-050, filed 8/31/88.]

WAC 296-130-060 Notices of infraction. The department may issue a notice of infraction to an employer who violates RCW 49.12.270 through 49.12.295. The employment standards supervisor will direct that notices of infraction contain the following when issued:

(1) A statement that the notice represents a determination that the infraction has been committed by the employer named in the notice and that the determination will be final unless contested;

(2) A statement that the infraction is a noncriminal offense for which imprisonment will not be imposed as a sanction;

(3) A statement of the specific violation which necessitated issuance of the infraction;

(4) A statement of the penalty involved if the infraction is established;

(5) A statement informing the employer of the right to a hearing conducted pursuant to chapter 34.05 RCW if requested within twenty days of issuance of the infraction;

(6) A statement that at any hearing to contest the notice of infraction the state has the burden of proving, by a preponderance of the evidence, that the infraction was committed, and that the employer may subpoena witnesses including the agent that issued the notice of infraction;

(7) If a notice of infraction is personally served upon a supervisory or managerial employee of a firm or corporation, the department will within ten days of service send a copy of the notice by certified mail to the employer; and

(8) Constructive service may be made by certified mail directed to the employer named in the notice of infraction.

[Statutory Authority: RCW 49.12.033, 49.12.280, 49.12.285, 43.22.270, 2002 c 243, and chapters 49.12 and 43.22 RCW. 03-03-010, § 296-130-060, filed 1/6/03, effective 1/6/03. Statutory Authority: RCW 43.22.270 and 1988 c 236. 88-18-044 (Order 88-20), § 296-130-060, filed 8/31/88.]

WAC 296-130-065 Service on employers. (1) If an employer is a corporation or a partnership, the department is not required to serve the employer personally. In such a case, if no officer or partner of a violating employer is present, the department may issue a notice of infraction to any supervisor or managerial employee.

(2) If the department serves a notice of infraction on a supervisory or managerial employee, and not on an officer, or partner of the employer, the department will mail by certified mail a copy of the notice of infraction to the employer or registered agent of the company. The department will mail a second copy by ordinary mail.

[Statutory Authority: RCW 49.12.033, 49.12.280, 49.12.285, 43.22.270, 2002 c 243, and chapters 49.12 and 43.22 RCW. 03-03-010, § 296-130-065, filed 1/6/03, effective 1/6/03. Statutory Authority: RCW 43.22.270 and 1988 c 236. 88-18-044 (Order 88-20), § 296-130-065, filed 8/31/88.]

WAC 296-130-070 Appeal of infraction notice. (1) If an employer desires to contest the notice of infraction issued, the employer will file two copies of a notice of appeal with the department at the office designated on the notice of infraction, within twenty days of issuance of the infraction.

(2) The department must:

(a) Conduct a hearing in accordance with chapter 34.05 RCW and chapter 10-08 WAC; and

(b) Notify the employee who filed the initial complaint that resulted in the notice of infraction.

(3) Employers may appear before the administrative law judge through counsel, or may represent themselves. The department must be represented by the office of the attorney general.

(4) All relevant evidence shall be admissible in a hearing convened pursuant to RCW 49.12.270 through 49.12.295. Admission of evidence is subject to the Administrative Procedure Act, chapter 34.05 RCW.

(5) The administrative law judge will issue a proposed decision that includes findings of fact, conclusions of law, and if appropriate, any legal penalty. The proposed decision will be served by certified mail or personally on the employer and the department. The employer or department may appeal to the director within thirty days after the date of issuance of the proposed decision. If none of the parties appeals within thirty days, the proposed decision may not be appealed either to the director or the courts.

(6) An appellant must file with the director an original and four copies of its notice of appeal. The notice of appeal must specify which findings and conclusions are erroneous. The appellant must attach to the notice the written arguments supporting its appeal.

The appellant must serve a copy of the notice of appeal and the arguments on the other parties. The respondent parties must file with the director their written arguments within thirty days after the date the notice of appeal and the arguments were served upon them.

(7) The director or his/her designee will review the proposed decision in accordance with the Administrative Procedure Act, chapter 34.05 RCW. The director may: Allow the parties to present oral arguments as well as the written arguments; require the parties to specify the portions of the record on which the parties rely; require the parties to submit additional information by affidavit or certificate; remand the matter to the administrative law judge for further proceedings; and require a departmental employee to prepare a summary of the record for the director to review. The director shall issue a final decision that can affirm, modify, or reverse the proposed decision.

(8) The director or his/her designee will serve the final decision on all parties. Any aggrieved party may appeal the final decision to superior court pursuant to the Administrative Procedure Act, chapter 34.05 RCW unless the final decision affirms an unappealed proposed decision. If no party appeals within twenty days, the director's decision is conclusive and binding on all parties.

[Statutory Authority: RCW 49.12.033, 49.12.280, 49.12.285, 43.22.270, 2002 c 243, and chapters 49.12 and 43.22 RCW. 03-03-010, § 296-130-070, filed 1/6/03, effective 1/6/03. Statutory Authority: RCW 43.22.270 and 1988 c 236. 88-18-044 (Order 88-20), § 296-130-070, filed 8/31/88.]

WAC 296-130-080 Penalty assessment. An employer found to have committed an infraction under RCW 49.12.270 through 49.12.295 may be assessed the maximum penalty of a fine of two hundred dollars for the first noncompliance violation. An employer that continues to violate the terms of the statute may be subject to a fine not to exceed one thousand dollars for each violation.

[Statutory Authority: RCW 49.12.033, 49.12.280, 49.12.285, 43.22.270, 2002 c 243, and chapters 49.12 and 43.22 RCW. 03-03-010, § 296-130-080, filed 1/6/03, effective 1/6/03. Statutory Authority: RCW 43.22.270 and 1988 c 236. 88-18-044 (Order 88-20), § 296-130-080, filed 8/31/88.]

WAC 296-130-100 Collective bargaining not impaired. Nothing in this chapter will be deemed to interfere with, impede, or in any way diminish the right of employees to bargain collectively with their employers through representatives of their own choosing in order to establish leave benefits in excess of the applicable provisions of this chapter.

[Statutory Authority: RCW 49.12.033, 49.12.280, 49.12.285, 43.22.270, 2002 c 243, and chapters 49.12 and 43.22 RCW. 03-03-010, § 296-130-100, filed 1/6/03, effective 1/6/03.]

Chapter 296-131 WAC
AGRICULTURAL EMPLOYMENT STANDARDS

WAC

296-131-001	Applicability.
296-131-005	Definitions.
296-131-006	Authority to enter, inspect, and investigate places of employment and records, and to conduct interviews.
296-131-010	Payment interval.
296-131-015	Pay statements.
296-131-017	Employment records.
296-131-020	Meals and rest periods.
296-131-100	Permits to employ minors.
296-131-105	Parental and school authorization.
296-131-110	Posting.
296-131-115	Age of employment.
296-131-117	Minimum wages—Minors.
296-131-120	Hours of work for minors in agriculture.
296-131-125	Prohibited and hazardous employment.
296-131-126	Lifting.
296-131-130	Recordkeeping.
296-131-135	Revocation of permits.
296-131-140	Variances.

WAC 296-131-001 Applicability. These standards, adopted pursuant to sections 83 through 86, chapter 380, Laws of 1989, shall apply to persons employed in agricultural labor as defined in RCW 50.04.150 and WAC 296-131-005. The standards in this chapter beginning at WAC 296-131-100 shall apply only to minors employed in agricultural labor. The standards in this chapter do not apply to the immediate family members of the officers of any business engaged in agricultural production of crops or livestock.

[Statutory Authority: RCW 49.30.030. 90-14-038, § 296-131-001, filed 6/29/90, effective 11/1/90. Statutory Authority: RCW 43.22.270, 1989 c 380 and chapter 49.46 RCW. 89-22-015 (Order 89-15), § 296-131-001, filed 10/24/89, effective 11/24/89.]

WAC 296-131-005 Definitions. For the purpose of these rules:

(1) A "minor" is a person of either gender, employed in agricultural labor, who is under the age of eighteen years.

(2) "Agricultural labor" is defined as services performed:

(a) On a farm, in the employ of any person, in connection with the cultivation of the soil, or in connection with raising or harvesting any agricultural or horticultural commodity, including raising, shearing, feeding, caring for, training, and management of livestock, bees, poultry, and furbearing animals and wildlife, or in the employ of the owner or tenant or other operator of a farm in connection with the operation, management, conservation, improvement, or maintenance of such farm and its tools and equipment; or

(b) In packing, packaging, grading, storing, or delivering to storage, or to market or to a carrier for transportation to market, any agricultural or horticultural commodity; but only if such service is performed as incident to ordinary farming operations.

"Agricultural labor" does not include employment in commercial packing houses, commercial storage establishments, commercial canning, commercial freezing, or any other commercial processing with respect to services performed in connection with the cultivation, raising, harvesting

and processing of oysters or raising and harvesting of mushrooms or in connection with any agricultural or horticultural commodity after its delivery to a terminal market for distribution for consumption.

(3) "Department" means the department of labor and industries.

(4) "Director" means the director of the department of labor and industries.

(5) "Employ" means to engage, suffer, or permit to work in agricultural labor.

(6) "Employee" means any person employed by an employer, except those who are members of the immediate family of an employer.

(7) "Employer" means any person, firm, corporation, partnership, business trust, legal representative, or other business entity that engages in any agricultural activity in this state and employs one or more employees.

[Statutory Authority: RCW 49.30.030. 90-14-038, § 296-131-005, filed 6/29/90, effective 11/1/90.]

WAC 296-131-006 Authority to enter, inspect, and investigate places of employment and records, and to conduct interviews. In order to carry out the purposes of this chapter, the director or the director's authorized representative is authorized:

(1) To enter without delay any work site or area or other environment where work is performed by an employee or where employment records are, or are required to be, maintained; and

(2) To inspect, transcribe, and copy all pertinent records, and to inspect and investigate any such place of employment and all pertinent conditions, structures, machines, apparatus, devices, equipment, and materials therein, and to question privately any employer, owner, operator, agent, or employee.

[Statutory Authority: RCW 49.30.030 and 43.22.310. 92-15-099, § 296-131-006, filed 7/20/92, effective 8/20/92.]

WAC 296-131-010 Payment interval. All wages due shall be paid at no longer than monthly intervals to each employee on established regular pay days, unless federal law requires more frequent pay intervals. To facilitate bookkeeping, an employer may implement a regular payroll system in which wages from up to seven days before pay day may be withheld from the pay period covered and included in the next pay period.

[Statutory Authority: RCW 43.22.270, 1989 c 380 and chapter 49.46 RCW. 89-22-015 (Order 89-15), § 296-131-010, filed 10/24/89, effective 11/24/89.]

WAC 296-131-015 Pay statements. A pay statement shall be provided to each employee at the time wages are paid. The pay statement shall identify the employee, show the number of hours worked or the number of days worked based on an eight-hour day, the rate or rates of pay, the number of piece work units earned if paid on a piece work basis, the gross pay, the pay period, all deductions and the purpose of each deduction for the respective pay period. A pay statement shall also include the employer's name, address, and telephone number.

[Statutory Authority: RCW 43.22.270, 1989 c 380 and chapter 49.46 RCW. 89-22-015 (Order 89-15), § 296-131-015, filed 10/24/89, effective 11/24/89.]

WAC 296-131-017 Employment records. (1) Every employer shall keep for at least three years a record of the name, address, and occupation of each employee, dates of employment, rate or rates of pay, amount paid each pay period to each such employee and the hours worked.

(2) Every employer shall make the records described in subsection (1) of this section available to the director or the director's authorized representative at any time for inspection and transcription or copying and to the employee, upon request for that employee's work record, at any reasonable time.

[Statutory Authority: RCW 43.22.270, 1989 c 380 and chapter 49.46 RCW. 89-22-015 (Order 89-15), § 296-131-017, filed 10/24/89, effective 11/24/89.]

WAC 296-131-020 Meals and rest periods. (1) Every employee employed more than five hours shall receive a meal period of at least thirty minutes. Employees working eleven or more hours in a day shall be allowed at least one additional thirty-minute meal period.

(2) Every employee shall be allowed a rest period of at least ten minutes, on the employer's time, in each four-hour period of employment. For purposes of computing the minimum wage on a piecework basis, the time allotted an employee for rest periods shall be included in the number of hours for which the minimum wage must be paid.

[Statutory Authority: RCW 49.30.030. 90-14-037, § 296-131-020, filed 6/29/90, effective 8/1/90.]

WAC 296-131-100 Permits to employ minors. (1) Within three days after the commencement of employment of one or more minors, an employer shall file with the department an application for a permit to employ minors. When validated by the supervisor of employment standards, this permit will authorize the employer to employ for one year any number of minor workers at the workplace specified in accordance with the conditions of the permit and the regulations established in this chapter.

(2) An employer shall at all times employ minors in accordance with the regulations established in this chapter, regardless whether the employer has filed with the department an application for a permit to employ minors as required in subsection (1) of this section.

(3) The department shall annually publicize the requirements of this chapter through departmental publications and other appropriate means designed to assist employers in complying with the law.

[Statutory Authority: RCW 49.30.030. 90-14-038, § 296-131-100, filed 6/29/90, effective 11/1/90.]

WAC 296-131-105 Parental and school authorization. (1) An employer of a minor shall be required to annually obtain written authorization from a minor's parent before employing the minor.

(2) Except when performing intermittent weekend work, a minor who is legally required to attend school and who is working during the school year shall obtain from his or her

school written authorization to work a specified number of hours per day and per week up to the maximum permitted in WAC 296-131-120, based on an evaluation of the impact of work on the student's academic performance. School authorization is not required for high school graduates.

(3) The parental and school authorization required by this chapter shall be on forms supplied by the department and shall be kept on file by the employer.

(4) Neither parent nor school authorization is required for minors who are emancipated by court order.

(5) For purposes of this section, "intermittent weekend work" is defined as work during the weekend arranged to be performed after the end of the preceding school week. Work performed after the beginning of the next school day is not considered to be intermittent weekend work and requires school authorization. Work during more than two weekends per quarter is not considered to be intermittent weekend work.

[Statutory Authority: RCW 49.30.030. 90-14-038, § 296-131-105, filed 6/29/90, effective 11/1/90.]

WAC 296-131-110 Posting. (1) At least one copy of a valid permit to employ minors shall be posted in a conspicuous place at the workplace specified in the permit.

(2) An informational poster supplied by the department, describing in English and Spanish the rights of agricultural employees under this chapter, also shall be posted in a conspicuous place at the workplace specified in the permit.

[Statutory Authority: RCW 49.30.030. 90-14-038, § 296-131-110, filed 6/29/90, effective 11/1/90.]

WAC 296-131-115 Age of employment. No minor under the age of fourteen shall be employed in agriculture at any time except as follows: Minors twelve and thirteen years of age may be employed in the hand harvest of berries, bulbs, and cucumbers and in the hand cultivation of spinach during weeks when school is not in session.

[Statutory Authority: RCW 49.30.030. 90-14-038, § 296-131-115, filed 6/29/90, effective 11/1/90.]

WAC 296-131-117 Minimum wages—Minors. Except where a higher minimum wage is required by Washington state or federal law:

(1) Every employer shall pay to each employee who has reached their sixteenth or seventeenth year of age a rate of pay per hour which is equal to the hourly rate required by RCW 49.46.020 for employees eighteen years of age or older, whether computed on an hourly, commission, piecework, or other basis, except as may be otherwise provided under this chapter.

(2) Every employer shall pay to each employee who has not reached their sixteenth year of age a rate of pay per hour that is not less than eighty-five percent of the hourly rate required by RCW 49.46.020 for employees eighteen years of age or older, whether computed on an hourly, commission, piecework, or other basis, except as may be otherwise provided under this chapter.

(3) These minimum wage provisions shall not apply when a minor student is in a work place to carry out an occupational training experience assignment directly supervised on the premises by a school official or an employer under contract with a school, and when no appreciable benefit is rendered to the employer by the presence of the minor student.

[Statutory Authority: RCW 43.22.270, 49.46.020, and chapters 43.22, 49.30, and 49.46 RCW. 01-13-012, § 296-131-117, filed 6/11/01, effective 7/12/01.]

WAC 296-131-120 Hours of work for minors in agriculture. (1) Minors legally required to attend school may not be employed during school hours except by special permission from school officials as provided in RCW 28A.27.010 and 28A.27.090.

(2)(a) Minors under the age of sixteen may work up to three hours a day on school days, up to eight hours a day on nonschool days and up to twenty-one hours a week during weeks when school is in session. Minors under the age of sixteen may work up to eight hours a day and up to forty hours a week during weeks when school is not in session.

(b) Except as otherwise provided, on days when school is in session, minors under the age of sixteen may not be employed before 7:00 a.m. nor after 8:00 p.m. On days when school is not in session, minors under the age of sixteen may not be employed before 5:00 a.m. nor after 9:00 p.m. On days when school is in session, minors under the age of sixteen employed in animal agriculture or whose employment in crop production requires daily attention to irrigation, may be employed beginning at 6:00 a.m.

(3)(a) Minors who are sixteen and seventeen years of age may work up to twenty-eight hours a week, up to four hours a day on school days and up to eight hours a day on nonschool days during weeks when school is in session. Minors who are sixteen and seventeen years of age may work up to ten hours per day and up to fifty hours per week during weeks when school is not in session. Minors who are sixteen and seventeen years of age may work up to sixty hours per week in the mechanical harvest of peas, wheat, and hay during weeks when school is not in session.

(b) Minors who are sixteen and seventeen years of age may not be employed before 5:00 a.m. nor after 10:00 p.m. Minors who are sixteen and seventeen years of age may not work later than 9:00 p.m. on more than two consecutive nights preceding a school day.

(4) Except for minors employed in dairy or livestock production, in the harvest of hay, or whose employment in crop production requires daily attention to irrigation, no minor shall be employed more than six days in any one week.

(5) The provisions of this section shall not apply to minors sixteen years of age and older who can demonstrate emancipation by either (a) providing a marriage certificate as proof of marriage, or (b) providing a birth certificate that names the minor as a parent. Copies of such documents must be retained by the employer for one year, pursuant to the requirements of WAC 296-131-130.

[Statutory Authority: RCW 49.30.030 and 43.22.310. 92-15-099, § 296-131-120, filed 7/20/92, effective 8/20/92. Statutory Authority: RCW 49.30.030. 90-14-038, § 296-131-120, filed 6/29/90, effective 11/1/90.]

WAC 296-131-125 Prohibited and hazardous employment. (1) Employment in the following occupations in agriculture is prohibited to minors under the age of sixteen:

(a) Operating a tractor of over 20 PTO horsepower, or connecting or disconnecting an implement or any of its parts to or from such a tractor.

(b) Operating or assisting to operate (including starting, stopping, adjusting, feeding, or any other activity involving physical contact associated with the operation) any of the following machines:

(i) Corn picker, cotton picker, grain combine, hay mower, forage harvester, hay baler, potato digger, or mobile pea viner;

(ii) Feed grinder, crop dryer, forage blower, auger conveyor, or the unloading mechanism of a nongravity-type self-unloading wagon or trailer; or

(iii) Power post-hole digger, power post driver, or non-walking type rotary tiller.

(c) Operating or assisting to operate (including starting, stopping, adjusting, feeding, or any other activity involving physical contact associated with the operation) any of the following machines:

(i) Trencher or earthmoving equipment;

(ii) Fork lift; or

(iii) Potato combine.

(d) Working on a farm in a yard, pen, or stall occupied by a:

(i) Bull, boar, or stud horse maintained for breeding purposes; or

(ii) Sow with suckling pigs, or cow with newborn calf (with umbilical cord present).

(e) Felling, bucking, skidding, loading, or unloading timber with butt diameter of more than six inches.

(f) Working from a ladder or scaffold (painting, repairing, or building structures, pruning trees, picking fruit, etc.) at a height of over twenty feet.

(g) Driving a bus, truck, or automobile when transporting passengers, or riding on a tractor as a passenger or helper.

(h) Working inside:

(i) A fruit, forage, or grain storage designed to retain an oxygen deficient or toxic atmosphere;

(ii) An upright silo within two weeks after silage has been added or when a top unloading device is in operating position;

(iii) A manure pit; or

(iv) A horizontal silo while operating a tractor for packing purposes.

(i) Working in any manufacturing occupation.

(j) Working in any processing operations, including food processing.

(k) Working in transportation, warehouse, and storage or construction.

(l) Work in or about engine or boiler rooms.

(m) Work in freezers, meat coolers, and all work in preparing meats for sale. (Wrapping, sealing, labeling, weighing, pricing, and stocking are permitted if work is performed away from meat-cutting and preparation areas.)

(2) Employment in the following occupations in agriculture is prohibited to all minors:

(a) Handling, mixing, loading or applying (including cleaning or decontaminating equipment, disposal or return of empty containers, or serving as a flagman for aircraft applying) agricultural chemicals classified under the Federal Insecticide, Fungicide, and Rodenticide Act (7 U.S.C. 135 et seq.) as Category I of toxicity, identified by the word "poison" and the "skull and crossbones" on the label; or Category II of toxicity, identified by the word "warning" on the label.

(b) Handling or using a blasting agent, including but not limited to, dynamite, black powder, sensitized ammonium nitrate, blasting caps, and primer cord.

(c) Transporting, transferring, or applying anhydrous ammonia.

(d) Work involving circular, band or chain saws, power driven wood working machines, power driven metal forming, punching and shearing machines, and guillotine shears.

(e) Work involving slaughtering, meat packing, or processing and rendering.

(f) Work involving wrecking and demolition.

(g) Work involving roofing.

(h) Work involving mechanical excavation.

(i) Work in any place where a strike or lockout exists.

(3) The employment prohibited by subsection (1) of this section shall not apply to the employment of any minor as a vocational agriculture student-learner in any of the occupations described in subsection (1)(a), (b), (c), (d), (e), or (f) of this section when each of the following requirements are met:

(a) The student-learner is enrolled in a vocational education training program in agriculture under a recognized state or local educational authority, or in a substantially similar program conducted by a private school;

(b) Such student-learner is employed under a written agreement which provides that the work of the student-learner is incidental to his training; that such work shall be intermittent, for short periods of time, and under the direct and close supervision of a qualified and experienced person; that safety instruction shall be given by the school and correlated by the employer with on-the-job training; and that a schedule of organized and progressive work processes to be performed on the job have been prepared;

(c) Such written agreement contains the name of the student-learner, and is signed by the employer and by a person authorized to represent the educational authority or school; and

(d) Copies of each such agreement are kept on file by both the educational authority or school and by the employer.

(4) The employment prohibited by subsection (1) of this section shall not apply to the employment of any minor in those occupations for which the minor has successfully completed one or more federal extension service training programs described in 29 C.F.R. section 570.72(b) and who has been instructed by the employer in the safe and proper operation of the specific equipment to be used, who is continuously and closely supervised by the employer where feasible or, where not feasible, in work such as cultivating, whose safety is checked by the employer at least at midmorning, noon, and midafternoon, or during the first and second halves of the workday, whichever is more frequent.

(5) The employment prohibited by subsection (1) of this section shall not apply to the employment of any minor in those occupations for which the minor has successfully completed one or more of the vocational agriculture training programs described in 29 C.F.R. section 570.72(c) and who has been instructed by the employer in the safe and proper operation of the specific equipment to be used, who is continuously and closely supervised by the employer where feasible or,

where not feasible, in work such as cultivating, whose safety is checked by the employer at least at midmorning, noon, and midafternoon, or during the first and second halves of the workday, whichever is more frequent.

(6) No minor shall be permitted to ride in or work in the vicinity of a vehicle driven by any person who is under the age of sixteen or anyone who does not possess a valid driver's license.

(7) No minor shall be employed in agriculture in the harvest of any crop to which agricultural chemicals described in subsection (2)(a) of this section have been applied, prior to the expiration of the preharvest interval or within fourteen days after the application if no preharvest interval has been established.

(8) If, upon inspection or investigation, the director or the director's designee believes that an employer is violating this section creating a danger from which there is a substantial probability that death or serious physical harm could result to a minor employee, the director or the director's designee may issue an order under RCW 34.05.479 immediately restraining the condition, practice, method, process, or means creating the danger and suspend the employer's permit authorizing employment of minors until action is taken to avoid, correct, or remove the danger.

(9) A copy of the federal regulations referenced in subsections (4) and (5) of this section may be obtained from the department upon request.

[Statutory Authority: RCW 49.30.030. 90-14-038, § 296-131-125, filed 6/29/90, effective 11/1/90.]

WAC 296-131-126 Lifting. Where weights in excess of twenty pounds are to be lifted, carried, pushed, or pulled as a normal part of an employee's responsibility, the employer shall instruct minors on correct weight lifting techniques prior to the commencement of work and display a poster developed by the department illustrating correct weight lifting techniques.

[Statutory Authority: RCW 49.30.030. 90-14-038, § 296-131-126, filed 6/29/90, effective 11/1/90.]

WAC 296-131-130 Recordkeeping. In addition to the records required under WAC 296-131-017, an employer is responsible for obtaining and keeping on file for one year the following information concerning each minor employee:

(1) Proof of age by means of a copy of one of the following: Birth certificate; driver's license; baptismal record; Bible record; insurance policy at least one year old indicating the date of birth; witnessed statement of the parent or guardian; or a completed federal employment eligibility verification (Form I-9);

(2) Parental authorization required by WAC 296-131-105;

(3) School authorization required by WAC 296-131-105;

(4) Documentation of emancipation as provided by WAC 296-131-120(5).

Every employer shall make the records described in this section available to the director or the director's authorized representative at any time for inspection and transcription or copying and to the employee, upon request for that employee's work record, at any reasonable time.

[Statutory Authority: RCW 49.30.030 and 43.22.310. 92-15-099, § 296-131-130, filed 7/20/92, effective 8/20/92. Statutory Authority: RCW 49.30.030. 90-14-038, § 296-131-130, filed 6/29/90, effective 11/1/90.]

WAC 296-131-135 Revocation of permits. (1) The department may revoke any employer's permit to employ minors upon a showing that the conditions of its issuance are not being met, or that other conditions exist which are detrimental to the health, safety, or welfare of the minor.

(2) The department may refuse to issue or renew a permit to employ minors. If the department refuses to issue or renew a permit, it shall send the employer a notice of denial. The notice of denial shall explain the grounds for denial of the permit. The department may refuse to renew a permit if the conditions of its initial issuance are not being met.

(3) Any employer aggrieved by any action taken by the department under this section may appeal the action or decision by filing notice of the appeal with the director within thirty days of the department's action or decision. Upon receipt of an appeal, a hearing shall be held in accordance with chapter 34.05 RCW. The director shall issue all final orders after the hearing. Final orders are subject to appeal in accordance with chapter 34.05 RCW. Orders not appealed within the time period specified in chapter 34.05 RCW are final and binding.

[Statutory Authority: RCW 49.30.030. 90-14-038, § 296-131-135, filed 6/29/90, effective 11/1/90.]

WAC 296-131-140 Variances. (1) Upon written application from an employer or an organization representing employers, a variance permitting employment of minors otherwise prohibited under WAC 296-131-120 or 296-131-125 may be granted for good cause shown. The employer or the organization representing employers shall give written notice to the employees so that they may submit their views to the department on any variance request.

(2) The department may afford the applicant and any involved employee, or employee representatives, the opportunity for oral presentation whenever circumstances of the particular application warrant.

(3) "Good cause" shall mean, but not be limited to, those situations in which the employer demonstrates that (a) the granting of the variance would not have a harmful effect upon the health, safety, or welfare of the minor employees involved; (b) the granting of the variance would not have a deleterious effect on school attendance or the academic performance of minors; and (c) the variance is necessary to meet usual crop cultural or harvest requirements.

(4) Upon application from an employer or an organization representing employers a variance permitting employment of minors otherwise prohibited under these rules may be granted by the director or an authorized representative of the director in response to a weather emergency.

[Statutory Authority: RCW 49.30.030. 90-14-038, § 296-131-140, filed 6/29/90, effective 11/1/90.]

Chapter 296-133 WAC

PROCEDURAL RULES SUPPLEMENTARY TO THE HEALTH CARE ACTIVITIES LABOR RELATIONS ACT, CHAPTER 156, LAWS OF 1972 EX. SESS.

WAC

296-133-010	Intent and purpose.
296-133-020	Policy.
296-133-030	Construction.
296-133-040	General.
296-133-050	Petitioner.
296-133-060	Authorized agent.
296-133-070	Employee association or organization—Qualifications.
296-133-080	Bargaining representative—Selection of—Petition.
296-133-090	Filing of petition.
296-133-100	Contents of petition—General.
296-133-110	Contents of petition filed by employee or employee organization.
296-133-120	Contents of petition filed by employer.
296-133-130	Intervention.
296-133-140	Conferences—Notice of hearing.
296-133-150	Petition—Amendments or withdrawals.
296-133-160	Unit determinations—Considerations.
296-133-170	Representation questions—Timeliness.
296-133-180	Employee lists.
296-133-190	Authorization cards—Acceptability.
296-133-200	Conduct of election.
296-133-210	Run-off election procedure.
296-133-220	Certification.
296-133-230	Unfair labor practices—Who may file.
296-133-240	Filing of charges.
296-133-250	Actionable charges—Dismissals.
296-133-260	Remedial orders.
296-133-270	Extensions of time.
296-133-280	Impasse-determination.
296-133-290	Administrative appeals to the director.
296-133-300	Appeal briefs.
296-133-310	Appeal briefs—Contents.
296-133-320	Record on appeal.

WAC 296-133-010 Intent and purpose. These rules are adopted pursuant to the authority of section 8, chapter 156, Laws of 1972 ex. sess., (hereinafter referred to as the "act") as supplementary to the act for the purpose of providing rules of procedure to aid and assist the department of labor and industries, its authorized agents, and interested parties in proceedings under the act. The department of labor and industries, (hereinafter referred to as "department") and its authorized agents may waive any requirements of these rules, unless a party shows that it would be prejudiced by such waiver or unless the rule to be waived involves a mandatory provision of the act.

[Order 72-13, § 296-133-010, filed 7/31/72.]

WAC 296-133-020 Policy. It is the policy of the department to expedite the settlement of labor disputes between health care activities and their employees and to promote peace in labor relations and nothing in these rules should be construed to prevent the department and its authorized agents, where not inconsistent with the intent and purpose of the act, from using its best efforts to adjust through conciliation any labor dispute arising between employers, employees or employee organizations subject to the provisions of the act.

[Order 72-13, § 296-133-020, filed 7/31/72.]

WAC 296-133-030 Construction. These rules shall be liberally construed to effectuate the purposes and provisions of the act.

[Order 72-13, § 296-133-030, filed 7/31/72.]

WAC 296-133-040 General. Any terms used in these rules that are defined in the act shall have the same meaning as set forth therein.

[Order 72-13, § 296-133-040, filed 7/31/72.]

WAC 296-133-050 Petitioner. "Petitioner" shall mean any person, employer or employee association authorized to request the department to take action under the provisions of the act or these rules.

[Order 72-13, § 296-133-050, filed 7/31/72.]

WAC 296-133-060 Authorized agent. "Authorized agent" of the department shall mean the director, the supervisor of industrial relations, a labor mediator or a hearing officer specifically authorized by the director to conduct proceedings under the act.

[Order 72-13, § 296-133-060, filed 7/31/72.]

WAC 296-133-070 Employee association or organization—Qualifications. In order to qualify as an employee association as referred to in section 3 of the act, any such organization or association:

(1) Upon request by the authorized agent, or any party of interest, must produce authentic records of how, when and by whom the organization was formed.

(2) Shall have a written constitution and/or bylaws which plainly indicates that one of the primary purposes of the organization or association is to represent employees in labor relations matters with employers and is consistent with the requirements of the act and is available for review by any member.

(3) The constitution and/or bylaws must provide:

(a) An approved, customary or recognized method for the nomination and election of officers in accordance with accepted parliamentary procedures, the terms of such officers not to exceed four years.

(b) An approved method of financial record keeping and a financial audit at least once a year, which audit is available to any member for review.

(c) That at least four regular meetings must be held each year with adequate notice of meetings to all members.

(d) That a specific and reasonable minimum number of members or a percentage of the membership must be present to form a quorum before any organization business may be transacted at regular or special meetings.

[Order 72-13, § 296-133-070, filed 7/31/72.]

WAC 296-133-080 Bargaining representative—Selection of—Petition. Applications to the department regarding the selection of a bargaining representative to represent employees of a bargaining unit of an employer shall be by petition on such form or forms as may be provided by the department. A written petition may be accepted by the department if the petition contains substantially the same information required by the forms provided by the department.

[Order 72-13, § 296-133-080, filed 7/31/72.]

WAC 296-133-090 Filing of petition. The petition for certification, decertification or amendment of certification of the representative of a bargaining unit must be filed either:

(1) With the Supervisor, Division of Industrial Relations, Department of Labor and Industries, General Administration Building, Olympia, Washington 98504; or

(2) If the health care activity is situated in western Washington with the Labor Mediator, Division of Industrial Relations, Department of Labor and Industries, 300 West Harrison Street, Seattle, Washington 98119; or

(3) If the health care activity is situated in eastern Washington with the Labor Mediator, Division of Industrial Relations, Department of Labor and Industries, North 1322 Post Street, Spokane, Washington 99207.

[Order 72-13, § 296-133-090, filed 7/31/72.]

WAC 296-133-100 Contents of petition—General. Petitions for the certification, decertification, or amendment of certification of an employee representative of a bargaining unit shall contain the following:

(1) A statement as to whether the petition is filed by a health care activities employee organization, a health care activities employee or a health care activities employer.

[Order 72-13, § 296-133-100, filed 7/31/72.]

WAC 296-133-110 Contents of petition filed by employee or employee organization. Petitions for certification decertification or amendment of certification filed by a health care activities employee organization or a health care activities employees, shall contain:

(1) A description of the bargaining unit which the petitioner claims to be appropriate, a statement as to whether there is any disagreement between the petitioner and interested parties as to the nature and scope of the proposed bargaining unit; and statement that the petitioner is authorized to represent at least thirty percent of the employees within the proposed bargaining unit.

(2) The names and addresses of any persons or employee organizations, known to the petitioner, who claim to represent any employees in the proposed appropriate bargaining unit; the expiration dates and brief descriptions of any collective bargaining agreements which may be in effect between an employer and an employee organization covering all or a portion of the employees in the proposed bargaining unit.

(3) The number and job titles of the employees in the proposed bargaining unit.

(4) A statement that the employer declines to recognize the petitioner as the employee representative, or that the health care activities employer is about to recognize another employee organization as the exclusive bargaining representative or the presently recognized or certified employee organization is no longer the representative of the employees in the proposed bargaining unit.

(5) The name, affiliation, if any, and the address of the petitioner.

(6) Whether a work stoppage or picketing is in progress at the health care activity and, if so, the approximate number of employees participating and the date that such work stoppage or picketing commenced.

(7) Any other relevant factual information.

(8) A specific statement of the relief or remedy that the petitioner seeks the department to invoke.

[Order 72-13, § 296-133-110, filed 7/31/72.]

WAC 296-133-120 Contents of petition filed by employer. Petitions for certification or amendment of certification of a bargaining representative filed by a health care activities employer, shall contain:

(1) A factual statement setting forth that one or more individuals or employee organizations has presented to the petitioner a claim to be recognized as the exclusive bargaining representative of all employees in a bargaining unit claimed to be appropriate; the job titles of the employees of such bargaining unit; the number of employees in such unit; and a statement of reasons as to whether the petitioner agrees or disagrees as to the nature or scope of such requested bargaining unit.

(2) The name or names, affiliation, if any, and addresses of individuals or employee organizations known to the petitioner making such claim for recognition as to the exclusive bargaining representative of employees in the health care activity.

(3) A statement regarding whether the petitioner has contracts with any employee organization or other representatives of employees, and if so, the expiration dates of such agreements.

(4) A statement as to whether or not a work stoppage or picketing is in progress at the health care activity involved, and if so, the approximate number of employees participating, and the date such work stoppage or picketing commenced.

(5) A statement of other relevant facts.

(6) A statement regarding the remedy or relief the petitioner requests the department to invoke.

[Order 72-13, § 296-133-120, filed 7/31/72.]

WAC 296-133-130 Intervention. Any third party having a legitimate interest in any proceedings commenced under the act may file a petition seeking intervention in such proceedings setting forth facts sufficient to establish such interests and setting forth in such petition the remedy or relief the petitioner seeks the department to invoke.

For the purposes of third party intervention, "legitimate interest" means that the petitioner must allege in the petition for intervention and be prepared to prove if requested that it is authorized to represent at least thirty percent of the employees within a proposed bargaining unit before leave to intervene may be granted. Any employee organization which has a signed, valid collective bargaining agreement encompassing the proposed bargaining unit or any portion thereof shall be considered to have a legitimate interest upon presentation to the department of an executed authentic copy of such collective bargaining agreement.

[Order 72-13, § 296-133-130, filed 7/31/72.]

WAC 296-133-140 Conferences—Notice of hearing. Upon the filing of petition for certification, decertification or amendment of certification of an exclusive bargaining representative of employees and the determination of an appropriate bargaining unit, an authorized agent shall confer with and

may hold informal conferences with the known interested parties in an effort to ascertain the agreed upon facts of the controversy. The authorized agent shall encourage the parties to agree upon an appropriate bargaining unit within the limitations of the act. Whenever the authorized agent shall determine that the parties are unable to agree upon an appropriate bargaining unit, and is unable to settle the controversy without hearing, a hearing shall be conducted. Notice of such hearing, with the time and place of such hearing, shall be given to all parties by mail at least six days prior to the date of hearing, excluding Saturdays, Sundays and legal holidays. Within a reasonable time following the determination of an appropriate bargaining unit, the authorized agent shall provide for a bargaining representation election in accordance with the provisions of section 3 of the act and as further provided in these rules.

[Order 72-13, § 296-133-140, filed 7/31/72.]

WAC 296-133-150 Petition—Amendments or withdrawals. At any time prior to the issuance of the written notice of a bargaining representation election, a petitioning party may, subject to the discretion of the authorized agent, amend or withdraw his petition.

[Order 72-13, § 296-133-150, filed 7/31/72.]

WAC 296-133-160 Unit determinations—Considerations. Whenever the department is called upon to make a determination of an appropriate bargaining unit within a health care activity, within the limitations of the act, the department shall consider the duties, skills and working conditions of the health care activities employees; the history of collective bargaining by the health care activities employees and their bargaining representative within the proposed bargaining unit and in the health care industry; the extent of organization among the health care activities employees; the desires of such employees and the affect of the proposed bargaining unit upon the efficiency of administration of the health care activity.

[Order 72-13, § 296-133-160, filed 7/31/72.]

WAC 296-133-170 Representation questions—Timeliness. The department will not consider any question of representation within any bargaining unit or subdivision thereof in any health care activity within which in the preceding twelve-month period a valid election has been held. Nor will the department entertain any petition giving rise to the question of representation within any bargaining unit or portion thereof with a health care activity having a collective bargaining agreement in effect, except during the period not more than ninety nor less than sixty days prior to the expiration date of any such agreement. A collective bargaining agreement which contains a provision for automatic renewal or extension of the agreement or which is effective for a term of more than three years shall not be deemed to be a valid collection bargaining agreement for the purposes of this section.

[Order 72-13, § 296-133-170, filed 7/31/72.]

WAC 296-133-180 Employee lists. Health care activities employers shall furnish a current list of the names and addresses of all employees in a proposed or agreed upon bargaining unit prior to any scheduled representation hearing. The lists of such employees shall be available upon request to any organization which has been qualified under these rules and meeting the requirements of section 3 of the act.

[Order 72-13, § 296-133-180, filed 7/31/72.]

WAC 296-133-190 Authorization cards—Acceptability. In order to be acceptable as evidence of representation for the purposes of the thirty percent requirements of section 3 of the act, individual authorization cards must be signed and dated by the employee expressing his intention to be represented by a specific bargaining representative. A card signed and dated six months or more prior to the date on which examination of cards for representation purposes commences shall be considered invalid and not acceptable for representation purposes.

[Order 72-13, § 296-133-190, filed 7/31/72.]

WAC 296-133-200 Conduct of election. In the event a representation election is conducted for the purposes of certification, the following rules shall apply:

(1) Notice of election shall be given to all interested parties, and shall be prominently posted by the employer at a place or places within the health care services facility reasonably accessible to all employees. Notices of election shall be sent by mail to all interested parties no less than ten days prior to the date of the election excluding Saturdays, Sundays and legal holidays. Notices of election shall contain the following information; the date of election, hours and place of election, a list of employees eligible to vote, a description of the bargaining unit and a listing of employee organizations from which eligible employees may choose by ballot as well as a choice that such employees do not wish to be represented by any bargaining representative.

(2) Employee shall be deemed eligible to vote in an election for the certification of an exclusive bargaining representative of the employees of an appropriate bargaining unit who are regularly employed within the bargaining unit, either full or part time, and who are in the employ of the employer within fourteen days prior to the date of the issuance of the notice of election and on the date of election, except, supervisors as defined in section 2, subsection 5 of the act, and guards as defined in section 2, subsection 6 of the act, unless the bargaining unit is exclusively devoted to employees serving in the capacity of guards. Employees otherwise eligible to vote in a certification election may be permitted to vote by absentee ballot upon the filing of an affidavit with the authorized agent indicating that such person is eligible to vote in the certification election and that by reason of physical incapacity will be unable to be present at the balloting place on the date of election. The casting of ballots in a representation election by proxy will not be permitted.

(3) Each of the interested parties may designate one person as observer at the polls. Unless otherwise stipulated by the interested parties, observers must be nonsupervisory employees of the health care activities employer.

(4) Any observer, or the authorized agent, for good cause may challenge any employee's eligibility to vote. A challenged ballot shall be placed in an envelope bearing no identifying marks. It shall be placed in another envelope upon

which shall be written the name of the employee desiring to cast a ballot, the reasons for which the ballot was challenged, by whom it was challenged, the polling place at which it was challenged, and the envelope shall be sealed and initialed by the authorized agent.

(5) The challenged ballots previously placed in separate envelopes shall be placed in a sealed envelope marked "challenged ballots" and sent along with the tally sheet to the authorized agent. The challenged ballots shall not be opened or counted unless the counting of such ballots might affect the results of the election. If the challenged ballots might affect the results of the election, the authorized agent shall conduct an investigation into and if requested conduct a formal hearing on the validity of the challenges made. If it is concluded that the challenge was properly made, that ballot shall be excluded from the count. Otherwise, such ballot shall be counted as cast.

(6) Ballots may not be tallied until after the time for the closing of the polls unless all eligible voters have cast their ballot.

(7) Within five days after the tally of the ballots has been furnished, any party may file with the authorized agent an original and three copies of objections to the conduct of the election, or conduct affecting the results of the election, which shall contain a short factual statement of the reasons for the objections. Such filing must be timely, whether or not the challenged ballots are sufficient in number to affect the results of the election. Copies of such objections shall immediately be served by mail upon the other parties by the party filing them. If objections are filed to the conduct of the election, or conduct affecting the result of the election, the authorized agent shall investigate such objections. If the objections to the conduct of the election were sustained and the objections would affect the results of the election, the authorized agent, if requested by one of the interested parties, shall conduct a formal hearing.

[Order 72-13, § 296-133-200, filed 7/31/72.]

WAC 296-133-210 Run-off election procedure. Where more than one employee organization is on the ballot, and neither of the three or more choices receives votes from a majority of the votes cast in the election, a run-off election shall be held. The run-off ballot shall contain the two choices which receive the largest and second largest number of votes.

[Order 72-13, § 296-133-210, filed 7/31/72.]

WAC 296-133-220 Certification. If no timely objections are filed, the authorized agent will certify, as an exclusive bargaining representative, the employee organization which receives votes from a majority of the employees who vote in the election or any run-off election or will certify that no employee organization receive votes from a majority of the employees who voted in the election or any run-off election. A copy of such certification shall be mailed to all interested parties within ten days of certification, along with a certification of the results of the election.

[Order 72-13, § 296-133-220, filed 7/31/72.]

WAC 296-133-230 Unfair labor practices—Who may file. Any employee or employee organization or a health care activities employer may file in writing an unfair labor practice charge with the department of labor and industries, alleging an unfair labor practice as set forth in the applicable provisions of sections 4 and 5 of the act: Provided, That this section and other sections of these rules relating to unfair labor practice charges, shall not be construed to prohibit an employee, an employee organization or an employer from instituting court proceedings as authorized under section 7 of the act without first having exhausted the remedies provided by these rules, except, in those cases in which an employee, an employee organization or an employer requests the director of labor and industries to exercise the authority invested in him to institute court proceedings to seek relief from the commission of an unfair labor practice. Any decision by a court rendered upon the merits of an unfair labor practice charge pursuant to a legal action instituted under the authority of section 7 shall be deemed res judicata and a bar to maintaining proceedings under this section and other sections of these rules relating to unfair labor practice charges.

[Order 72-13, § 296-133-230, filed 7/31/72.]

WAC 296-133-240 Filing of charges. Unfair labor practice charges shall be filed on such form or forms provided by the department and shall contain the following:

(1) The name and address of the health care activities employer.

(2) The name and address of the person or organization who is filing the charges.

(3) The statement as to the basis of the charge which shall be specific as to facts, names, addresses, dates and places.

(4) A statement as to whether or not the complainant has instituted legal proceedings under the authority of section 7 of the act seeking relief from the alleged commission of an unfair labor practice.

(5) The unfair labor practice charges shall be verified under oath in substantially the following form:

. . . . . , being first sworn on oath, deposes and says: That he is the complainant named in the foregoing unfair labor practice charges, that he has read the unfair labor practice charges, knows the contents thereof and believes the same to be true and correct to the best of his knowledge and belief.

. . . . . .
(Signature of Complainant)

Subscribed and sworn to before me on this . . . . . day of . . . . . 1972.

. . . . . .
Notary Public in and for the State of Washington, Residing at . . . . . .

[Order 72-13, § 296-133-240, filed 7/31/72.]

WAC 296-133-250 Actionable charges—Dismissals. Upon receipt of an unfair labor practice charge, the department shall determine whether or not the complainant has alleged actionable charges of unfair labor practices under the provisions of the act. If the department finds that actionable charges have been alleged by the complainant, the department may give notice of not less than three days to the parties

to the controversy that an informal hearing conference will be held at which conference testimony and evidence will be taken under oath to determine whether such charges are factually meritorious or frivolous. If the charges are found to be actionable charges and the evidence obtained at the informal hearing conference discloses that the charges are made in good faith and give rise to substantial questions of fact or law, the department shall issue a complaint and schedule the matter for hearing. If the informal hearing conference discloses that the unfair labor practice charges are frivolous and not made in good faith and do not give rise to substantial questions of fact or law, the unfair labor practice charges shall be dismissed and those persons or organizations named in such charges shall be notified in writing of such dismissal and the reasons for the dismissal. If the department finds that actionable charges have not been alleged under the provisions of the act, the unfair labor practice charges shall be dismissed and those persons or organizations named in such charges shall be notified in writing of such dismissal and the reasons for the dismissal.

[Order 72-13, § 296-133-250, filed 7/31/72.]

WAC 296-133-260 Remedial orders. Remedial orders may be issued by the department which shall afford an appropriate remedy or relief consistent with the provisions of the act and the findings and conclusions of the authorized agent, which may include the prominent posting of such remedial orders within the health care activity at such place or places reasonably accessible to all employees for periods of time not to exceed six months.

[Order 72-13, § 296-133-260, filed 7/31/72.]

WAC 296-133-270 Extensions of time. Whenever in these rules provision is made for the conducting of a hearing by the authorized agent for the purpose of taking testimony and evidence after the giving of a notice of the time and place of such hearing, the authorized agent may upon his own motion change the time for such hearing to a later date and change the place for such hearing. In addition, any party to the hearing process may upon written application to the authorized agent upon the basis of good cause shown in such application be granted an extension of time and a change of the date or place or both for such hearing which is reasonably convenient to the parties.

[Order 72-13, § 296-133-270, filed 7/31/72.]

WAC 296-133-280 Impasse-determination. Whenever either a health care activities employer or the exclusive bargaining representative of the bargaining unit of such health care activity are of the opinion that an impasse has arisen between the parties in the process of collective bargaining, either party may request the department in writing to determine whether an impasse exists in the collective bargaining process.

For the purpose of these rules and supplementary to section 9 of the act, an impasse in the collective bargaining process will be presumed to have been reached when the parties have not agreed upon a collective bargaining contract and an issue or issues remain upon which neither party is willing to agree, nor make in good faith concessions or make further concessions in good faith, nor agree upon any good faith proposal nor make further proposals in good faith for the settlement of any issue remaining unresolved.

For the purpose of these rules and supplementary to the act, the terms "collective bargaining" means the performance of the mutual obligations of the employer and the bargaining representative of the employees to meet at reasonable times, to confer in good faith with respect to wages, hours and other terms and conditions of employment, or the negotiations of an agreement, or any question arising thereunder, and the execution of a written contract incorporating any agreement reached, but such obligation does not compel either party to agree to a proposal or require the making of a concession.

In any case in which the department is requested to determine whether an impasse has been reached in the collective bargaining process, the authorized agent shall request the parties representing the employer, and the parties representing the exclusive bargaining representative in the negotiations to meet and confer with the authorized agent for the purpose of an informal hearing conference to enable a determination of the facts to be made as to whether an impasse has been reached in the collective bargaining process. For that purpose the authorized agent may take evidence and testimony under oath. If the authorized agent determines that an impasse has been reached in the collective bargaining process, he shall forthwith enter findings and conclusions forming the basis of his belief that an impasse has been reached and setting forth therein the specific issues remaining unresolved between the parties which constitute the impasse accompanied by an order declaring an impasse and ordering the parties to forthwith choose and impanel a board of arbitrators pursuant to the provisions of section 9 of the act. Which order shall further require the parties to furnish copies of the authorized agent's findings and conclusions and order declaring an impasse to each member of the panel of arbitrators for their guidance upon the subject of the issues remaining unresolved constituting the impasse.

If an impasse is found not to have been reached in the process of collective bargaining, the authorized agent shall enter findings and conclusions and order the parties to resume the process of collective bargaining.

[Order 72-13, § 296-133-280, filed 7/31/72.]

WAC 296-133-290 Administrative appeals to the director. Any employer or employee of a health care activity or employee organization or other person or organization who was a party in the proceeding before the authorized agent and aggrieved by any action taken or decision made by any authorized agent may appeal such action or decision to the director of the department of labor and industries by filing a notice of such appeal with the director of the department of labor and industries and the authorized agent within thirty days of such action or decision. The notice of appeal shall be accompanied by a concise numbered statement of the assignments of error which are to be relied upon and are the subject of the appeal. Copies of the notice of appeal and assignments of error shall be served upon all parties to the proceeding before the authorized agent. Proof of such service shall be filed in the office of the director. The notice of appeal may in the discretion of the director suspend such action or decision

of the authorized agent pending the determination of the appeal by the director. The director shall review the record and written briefs on appeal filed by the respective parties and may bear oral argument regarding the issues on appeal. The director shall decide the issues raised by the appeal and shall notify all parties in writing of his decision. The decision of the director in the absence of an appeal to the superior court pursuant to the Administrative Procedure Act shall be final at the expiration of thirty days from the date of filing of such decision.

[Order 72-13, § 296-133-290, filed 7/31/72.]

WAC 296-133-300 Appeal briefs. Typewritten memoranda of authority or appeal briefs shall be filed in the office of the director by the respective parties to the appeal thirty days following the filing of the notice of appeal. Any party to the appeal filing an appeal brief may request that a hearing of oral arguments upon the appeal be held before the director. Parties to the appeal not filing an appeal brief will not be granted oral hearing of arguments before the director nor permitted to present oral arguments to the director at any hearing that may be held for the presentation of arguments on appeal. The time and place for hearing oral arguments, when requested, will be fixed at the expiration of the time for filing briefs and notice of any such hearing will be sent to all parties to the appeal.

[Order 72-13, § 296-133-300, filed 7/31/72.]

WAC 296-133-310 Appeal briefs—Contents. In addition to the cover or title pages of the brief and any index, appeal briefs shall consist of the following subdivisions, titled with distinctive type and in the order indicated:

(1) Statement of the case. Under this heading the following shall be included: A brief statement of the nature of the case which is the subject of the appeal and a clear and concise statement of the facts appropriate to an understanding of the nature of the controversy, with page references to the record on appeal.

(2) Assignments of error. Each error relied upon and served with the notice of appeal shall be clearly pointed out and discussed under the appropriately designed headings. No alleged error of the authorized agent will be considered unless the same be definitely pointed out in the assignments of error in the appellant's brief. Whenever error is assigned to any findings of fact or conclusion of the authorized agent, so much of the findings or conclusions claimed to be erroneous shall be set out verbatim in the brief.

(3) Argument of counsel for appellant shall set forth and discuss the authorities in support of the position of the appellant and shall be appropriately designed and arranged for discussion and argument of the assignments of error and the issues arising out of such assignments of error with references where appropriate to the record on appeal.

(4) Argument of counsel for respondent. The brief of respondent on appeal need not contain a subdivision containing the assignments of error on appeal, but in the argument of counsel for respondent there shall be directed, under appropriately titled sections, argument and discussion in opposition to the assignments of error of the appellant, or in support of the decision of rulings of the authorized agent and where appropriate with supporting references to the pages of the record on appeal.

[Order 72-13, § 296-133-310, filed 7/31/72.]

WAC 296-133-320 Record on appeal. Upon receipt of a copy of the notice of appeal, the authorized agent shall promptly cause to be prepared and forwarded to the office of the director the record on appeal which shall include, a transcript of the proceedings of any hearing held by the authorized agent, the originals of all exhibits or documentary evidence admitted in evidence or rejected in evidence by the authorized agent and any other papers or evidence before the authorized agent relied upon in arriving at his decision. All exhibits shall be appropriately and plainly marked for reference. In addition the authorized agent shall certify in the appropriately titled case the record on appeal as containing all of the evidence, matters and things coming before the authorized agent at the hearing, or relied upon in making his findings, conclusions, decision and any remedial order. A copy of the record on appeal, or any portion thereof, may be obtained by any party to the appeal upon payment to the authorized agent of the reasonable cost per page.

[Order 72-13, § 296-133-320, filed 7/31/72.]

Chapter 296-134 WAC
PARENTAL (FAMILY) LEAVE

WAC

296-134-001	Declaration of purpose.
296-134-010	Definitions.
296-134-030	Entitlement to leave.
296-134-040	Notice.
296-134-050	Medical confirmation.
296-134-060	Leave from same employer.
296-134-070	Returning to employment.
296-134-090	Penalties.

WAC 296-134-001 Declaration of purpose. It is in the public interest that employers provide reasonable leave upon the birth or adoption of a child or to allow for the care of a child under eighteen years old with a terminal health condition. This chapter serves to implement chapter 11, Laws of 1989 1st ex. sess., establishing a minimum standard for employee leave in furtherance of family stability and economic security.

These rules are not comprehensive and should be implemented in conjunction with the statutory requirements of chapter 49.78 RCW.

[Statutory Authority: 1989 1st ex.s. c 11. 89-23-044, § 296-134-001, filed 11/13/89, effective 12/14/89.]

WAC 296-134-010 Definitions. For the purposes of this chapter:

(1) "Chapter" means this chapter of the Washington Administrative Code or chapter 11, Laws of 1989 1st ex. sess.

(2) "Department" means the department of labor and industries.

(3) "Employee" means a person, other than an independent contractor, employed by an employer on a continuous basis for the previous fifty-two weeks for at least an average of thirty-five hours a week. In computing the average number

of hours worked, hours over fifty hours a week shall not be included.

A person is employed on a continuous basis despite a temporary interruption in the performance of the person's job duties if (a) the interruption is caused by the employee taking authorized leave; (b) the interruption is caused by the employer's temporary cessation of all or most operations and the employees do not qualify for unemployment compensation benefits due to a continuing employment relationship, e.g., school employees; or (c) the employee qualified for unemployment compensation benefits as a "stand-by" worker as defined in WAC 192-12-150 for time periods of two weeks or less.

(4) "Employer" means any person, firm, corporation, partnership, business trust, legal representative, or other business entity which engages in any business, industry, profession, or activity in this state, and any unit of local government, which (a) employed a daily average on one hundred or more employees during the last calendar quarter at the place where the employee requesting leave reports for work, or (b) employed a daily average of one hundred or more employees within a twenty mile radius of the place where the employee requesting leave reports for work, the employer maintains a central hiring location and customarily transfers employees among workplaces.

Any employer that has demonstrated the ability to transfer employees between workplaces within the twenty mile radius for the purpose of covering a temporary labor shortage or a permanent or temporary reassignment is considered to be an employer that customarily transfers employees.

A "central hiring location" is an office of the employer or its agent where two or more of the following functions are performed for two or more workplaces:

(i) Employment applications are accepted or screened;

(ii) Preemployment or employment interviews are conducted;

(iii) Hiring decisions are made.

"Employer" also includes the state, state institutions, and state agencies.

(5) "Infraction" means a violation of chapter 11, Laws of 1989 1st ex. sess. or this chapter, as found by the department.

(6) "Workweek" means a fixed and regularly recurring period of one hundred sixty-eight hours or seven consecutive twenty-four hour periods. It may begin on any day of the week and any hour of the day, and need not coincide with a calendar week.

[Statutory Authority: 1989 1st ex.s. c 11. 89-23-044, § 296-134-010, filed 11/13/89, effective 12/14/89.]

WAC 296-134-030 Entitlement to leave. (1) Subject to restrictions within the statute and these rules, an employee is entitled to twelve workweeks of family leave during any twenty-four month period. Use of family leave shall not preclude an employee from using other leave to which the employee is entitled during that period according to the terms of the appropriate collective bargaining agreement or employer leave policy.

(2) Employers may limit or deny family leave to designated key personnel or the highest paid ten percent of the employer's employees in the state.

(a) Designated key personnel may not exceed ten percent of the employer's employees in the state. Key personnel shall be designated based upon criteria determined by the employer which may not include the employee's age or gender or other criteria for the purpose of evading the requirements of this chapter. Any designation of key personnel shall take effect thirty days after the employee is notified.

(b) If the employer chooses to limit or deny family leave to the highest paid ten percent of the employer's employees within the state, the employer shall within forty-five days after a determination notify the employees who fall within the highest paid ten percent. In calculating the highest paid ten percent of the employer's employees within the state, the employer shall include total wages, salary, or bonuses paid. An employer may not limit or deny family leave to the highest paid ten percent of the employer's employees until thirty days after the employees are notified. The notice shall be good for up to one year regardless of changes in compensation and may be changed no more than once in any twelve-month period.

[Statutory Authority: 1989 1st ex.s. c 11. 89-23-044, § 296-134-030, filed 11/13/89, effective 12/14/89.]

WAC 296-134-040 Notice. (1) An employee planning to take family leave to care for a newborn or newly adopted child shall provide the employer with written notice at least thirty days in advance of the anticipated date of delivery or adoption, stating the dates during which the employee intends to take family leave. This notice is not intended to substitute for notice to take maternity disability leave which an employer may require.

(2) Failure of an employee to provide written notice of the intention to take family leave for any authorized reason shall allow an employer to increase or reduce the leave requested by up to three weeks.

[Statutory Authority: 1989 1st ex.s. c 11. 89-23-044, § 296-134-040, filed 11/13/89, effective 12/14/89.]

WAC 296-134-050 Medical confirmation. An employer seeking confirmation by an employee's health care provider regarding the date of a child's birth, the date on which incapacity or disability commenced or will probably commence and its probable duration, or the fact that a child has a terminal health condition, shall notify the employee within seven calendar days or five working days of receipt of the employee's notice of leave except where the employer requires medical confirmation as part of the initial leave request. If disputes arise regarding premature birth, incapacitation of the mother, maternity disability, or the terminal condition of a child, the opinions of additional health care providers shall be obtained within fourteen calendar days or ten working days of the employer's receipt of the opinion of the employee's health care provider except where the employee is unable to schedule an appointment or otherwise fails to cooperate or where the employee's doctor is responsible for the delay.

[Statutory Authority: 1989 1st ex.s. c 11. 89-23-044, § 296-134-050, filed 11/13/89, effective 12/14/89.]

WAC 296-134-060 Leave from same employer. When both parents of a child are employed by the same employer, the employer may limit the family leave to a total of twelve workweeks during a twenty-four month period. For purposes of this section, an "employer" is the same entity as that defined in WAC 296-134-010(4) for determining the scope of this chapter. Each state agency or institution shall be considered a separate employer.

[Statutory Authority: 1989 1st ex.s. c 11. 89-23-044, § 296-134-060, filed 11/13/89, effective 12/14/89.]

WAC 296-134-070 Returning to employment. (1) Subject to the exceptions in subsections (2) and (3) of this section, an employee who exercises any right to family leave under this chapter shall be entitled, upon return from leave or during any reduced leave schedule, to the same position, with the same pay, benefits, hours and shift, as held when the leave commenced, or to a position with equivalent benefits and pay at a workplace within twenty miles of the employee's workplace when leave commenced. Upon a written request of the employee, the employer shall provide a written explanation to the employee if the employee is not allowed to return to the same position.

(2) If the employer's circumstances have changed so that the employee cannot be reinstated to the same position or to a position with equivalent pay and benefits, an employee returning from family leave shall be reinstated in any position which is vacant and for which the employee meets the minimum qualifications. The filling of a position held by an employee on family leave does not by itself constitute changed circumstances.

(3) Reinstatement of an employee returning from family leave need not occur as provided under subsection (1) or (2) of this section if:

(a) The specific job is eliminated by a bona fide restructuring, or a reduction in force resulting from lack of funds or lack of work;

(b) The employee's workplace is completely shut down at the time for at least thirty days;

(c) The employer moves the workplace of the employee to a location at least sixty miles from the location of the workplace with leave commenced;

(d) An employee on family leave takes a position with another employer outside the home; or

(e) The employee fails to provide the required notice of intent to take family leave or fails to return on the established ending date of leave.

[Statutory Authority: 1989 1st ex.s. c 11. 89-23-044, § 296-134-070, filed 11/13/89, effective 12/14/89.]

WAC 296-134-090 Penalties. (1) The department may fine an employer up to two hundred dollars for the first infraction of this chapter or its enabling legislation.

(2) An employer that commits three or more infractions within a two-year period shall be considered an employer that continues to violate the statute, subject to a fine of up to one thousand dollars for each infraction. An infraction that affects more than one employee and that an employer refuses to correct within a reasonable time after notification by the department, such as the employer's refusal to display in a conspicuous place a poster informing employees of their rights under this chapter, shall also constitute a continuing violation, subject to a fine of up to one thousand dollars for each day the infraction continues.

[Statutory Authority: 1989 1st ex.s. c 11. 89-23-044, § 296-134-090, filed 11/13/89, effective 12/14/89.]

Chapter 296-150C WAC
COMMERCIAL COACHES

WAC

296-150C-0010 Authority, purpose, and scope.
296-150C-0020 What definitions apply to this chapter?
296-150C-0030 How is this chapter enforced?
296-150C-0040 Will you keep my manufacturing information confidential?
296-150C-0050 Can you prohibit the sale or lease of my commercial coach?
296-150C-0060 Who handles consumer complaints about commercial coaches?
296-150C-0070 Do you have reciprocal agreements with other states to inspect commercial coaches?
296-150C-0080 Do you allow a local enforcement agency to inspect commercial coaches at the manufacturing location?
296-150C-0100 What happens if I disagree with your decision regarding my compliance with this chapter?
296-150C-0110 Do you have an advisory board to address commercial coach issues?
296-150C-0120 Where can I obtain technical assistance regarding commercial coaches?
296-150C-0140 Do you allow the use of alternate materials, alternate design and method of construction?
296-150C-0150 How does the department regulate commercial coaches that are used as medical units as defined in chapter 296-150V WAC?

INSIGNIA

296-150C-0200 Who must obtain commercial coach insignia?
296-150C-0210 What are the insignia requirements?
296-150C-0220 How do I obtain insignia information and the required forms?
296-150C-0230 What are the insignia application requirements?
296-150C-0240 What documentation do you need to perform an alteration inspection?
296-150C-0250 How do I replace lost or damaged insignia?

DESIGN PLAN

296-150C-0300 When is design-plan approval required?
296-150C-0310 Who can approve design plans?

DESIGN-PLAN APPROVAL BY THE DEPARTMENT

296-150C-0320 What must I provide with my request for commercial coach design-plan approval by the department?
296-150C-0340 What must an engineering analysis for design plans include?
296-150C-0350 What must test procedures and results for design plans include?
296-150C-0380 What happens if you approve my design plan?
296-150C-0390 If my design plan is not approved, how much time do I have to submit a corrected design plan?
296-150C-0400 What happens after my design plan is approved?
296-150C-0410 When does my design plan expire?
296-150C-0415 Who approves addendums to design plans approved by the department?

DESIGN-PLAN APPROVAL BY A LICENSED PROFESSIONAL OR FIRM

296-150C-0420 Who can be authorized to approve design plans?
296-150C-0430 What information must a professional or firm provide to be authorized to approve design plans?
296-150C-0440 How will I know whether I am authorized to approve design plans?
296-150C-0450 How long is a licensed professional or firms authorization effective?
296-150C-0460 What information must a manufacturer provide when a professional or firm does the design-plan approval?
296-150C-0470 What happens after we receive the professional or firm approved design plan and information?
296-150C-0480 Do you have a list of professionals or firms that are authorized to approve design plans?

296-150C-0490 Who approves addendums to design plans approved by a professional or firm?

INSPECTIONS PRIOR TO ISSUANCE OF AN INSIGNIA

296-150C-0500 When is an inspection required?
296-150C-0510 How do I request an inspection?
296-150C-0520 What happens if my commercial coach passes inspection?
296-150C-0530 Am I charged if I request an inspection but I am not prepared?
296-150C-0540 Who inspects commercial coach installation at the building site?
296-150C-0550 Do you allow a commercial coach to be completed at the installation site?
296-150C-0560 What happens if I receive a notice of noncompliance after inspection of the alteration to my commercial coach?

USED COMMERCIAL COACHES WITHOUT AN INSIGNIA

296-150C-0580 Must I obtain an insignia for used commercial coaches?
296-150C-0590 How do I obtain insignia for used commercial coaches?

MANUFACTURER'S NOTICE TO THE DEPARTMENT

296-150C-0700 Must manufacturers of commercial coaches notify you if they manufacture at more than one location?
296-150C-0710 Must manufacturers of commercial coaches notify you of a change in business name or address?
296-150C-0720 Must manufacturers of commercial coaches notify you of a change in business ownership?

COMMERCIAL COACH CONSTRUCTION CODE

GENERAL

296-150C-0800 What manufacturing codes apply to commercial coaches?
296-150C-0805 Are there any special requirements for portable school classrooms?
296-150C-0810 Construction definitions.

STRUCTURAL

296-150C-0820 What are the basic structural requirements of a commercial coach?
296-150C-0830 Fastening of structural systems.
296-150C-0840 Live loads.
296-150C-0850 Roof loads.
296-150C-0860 Snow loads.
296-150C-0870 Standard wind loads.
296-150C-0880 Windstorm protection—Provisions for support and anchoring.
296-150C-0900 Interior walls and partitions.
296-150C-0910 Minimum uniform and concentrated live loads.
296-150C-0920 Design load deflection.
296-150C-0930 Structural load tests.

CONSTRUCTION

296-150C-0940 Fastening of structural systems.
296-150C-0950 Roof coverings/membrane/weather resistant.
296-150C-0960 What requirements apply to commercial coach roof trusses?
296-150C-0970 Roof construction.
296-150C-0990 Sealing wall exterior openings.
296-150C-1000 Drilling or notching of wood wall structural members.
296-150C-1020 Wall construction.
296-150C-1030 Fire-blocking.
296-150C-1040 Floors.
296-150C-1050 Drilling or notching of wood joist structural members.
296-150C-1060 Fastening of structural systems.
296-150C-1070 Floor closure material.
296-150C-1080 What design and construction requirements apply to a commercial coach chassis?

MATERIALS

296-150C-1090 Standards for equipment and installations.
296-150C-1100 Flame-spread limitations.
296-150C-1110 Combustible limitations.
296-150C-1120 Kitchen cabinet protection.
296-150C-1130 Insulation standards.
296-150C-1140 Room sizes.
296-150C-1150 Hallways.
296-150C-1160 Accessibility standards.
296-150C-1170 What are the lighting and ventilation requirements of a commercial coach?
296-150C-1175 Glass and glazed openings.
296-150C-1180 Commercial coach exits.
296-150C-1190 Interior privacy.
296-150C-1195 Fire warning equipment—Automatic smoke detectors.
296-150C-1200 Installation instructions.
296-150C-1210 Table: Number of ties required per side of commercial coach.

ELECTRICAL

296-150C-1220 Electrical—General.
296-150C-1230 Electrical definitions.
296-150C-1240 Branch circuit and feeder calculations.
296-150C-1250 Disconnecting means and branch circuit protective equipment.
296-150C-1260 Power supply—Feeder assembly equipment.
296-150C-1270 Identification of feeder assembly connection.
296-150C-1280 Wiring methods—Wiring of expandable or multiple units.
296-150C-1290 Under-chassis wiring.
296-150C-1300 Equipment mounting.
296-150C-1303 How must storage batteries be installed in a commercial coach?
296-150C-1310 Grounding—General.
296-150C-1320 Dielectric strength test.

MECHANICAL

296-150C-1330 Mechanical—General.
296-150C-1340 Mechanical definitions.
296-150C-1346 When HVAC equipment is supplied with more than one CFM rating, which rating do I use?
296-150C-1350 LPG system enclosure and mounting.
296-150C-1360 Gas piping—Piping design.
296-150C-1370 Gas piping—Expandable or multiple commercial coaches.
296-150C-1380 Concealed tubing.
296-150C-1390 Gas piping—Pipe-joint compound.
296-150C-1400 Gas piping—Hangers and supports.
296-150C-1410 Gas piping—Electrical ground.
296-150C-1420 Identification of gas supply connections.
296-150C-1430 Gas piping system openings.
296-150C-1440 Gas piping—Valves.
296-150C-1450 Gas piping—Testing for leakage before appliances are connected.
296-150C-1460 Gas piping—Testing for leakage after appliances are connected.

VENTILATION AND INDOOR AIR QUALITY

296-150C-1470 Ventilation and indoor air quality—General.
296-150C-1480 Ventilation and indoor air quality definitions.
296-150C-1490 Appliances—Installation.
296-150C-1500 Safety devices—Water heater relief valves.
296-150C-1510 Air ducts—Expandable or multiple commercial coach connections.
296-150C-1520 Air ducts—Duct and plenum insulation.

PLUMBING

296-150C-1530 Plumbing—General.
296-150C-1540 Plumbing—Definitions.
296-150C-1545 Does the department require a water system expansion tank be installed?
296-150C-1550 Drainage—Cap or plug.
296-150C-1560 Drainage—Clearance from drain outlet.
296-150C-1570 Water supply connection.

COMMERCIAL COACH FEES

296-150C-3000 Commercial coach fees.

DISPOSITION OF SECTIONS FORMERLY CODIFIED IN THIS CHAPTER

296-150C-0330 What must I provide with my request for a commercial coach vendor unit design-plan approval by the department? [Statutory Authority: RCW 43.22.340, [43.22.]355, [43.22.]360, [43.22.]432, [43.22.]440 and [43.22.]480. 96-21-146, § 296-150C-0330, filed 10/23/96, effective 11/25/96.] Repealed by 00-01-188, filed 12/22/99, effective 2/8/00. Statutory Authority: RCW 43.22.480.

296-150C-0980 Wall coverings. [Statutory Authority: RCW 43.22.340, [43.22.]355, [43.22.]360, [43.22.]432, [43.22.]440 and [43.22.]480. 96-21-146, § 296-150C-0980, filed 10/23/96, effective 11/25/96.] Repealed by 98-14-078,

filed 6/30/98, effective 731/98. Statutory Authority: Chapter 43.22 RCW.

296-150C-1345 May the electrical disconnect required for mechanical equipment be inside of or mounted on the equipment? [Statutory Authority: RCW 43.22.340 and 43.22.480. 99-13-010, § 296-150C-1345, filed 6/4/99, effective 7/5/99.] Repealed by 05-01-102, filed 12/14/04, effective 2/1/05. Statutory Authority: Chapter 43.22 RCW and 2003 c 291.

296-150C-1580 What manufacturing codes apply when converting structures to vendor units? [Statutory Authority: Chapter 43.22 RCW. 98-14-078, § 296-150C-1580, filed 6/30/98, effective 7/31/98. Statutory Authority: RCW 43.22.340, [43.22.]355, [43.22.]360, [43.22.]432, [43.22.]440 and [43.22.]480. 96-21-146, § 296-150C-1580, filed 10/23/96, effective 11/25/96.] Repealed by 00-01-188, filed 12/22/99, effective 2/8/00. Statutory Authority: RCW 43.22.480.

296-150C-1590 Is a structural analysis required when converting a vehicle or structure to a vendor unit? [Statutory Authority: Chapter 43.22 RCW. 98-14-078, § 296-150C-1590, filed 6/30/98, effective 7/31/98. Statutory Authority: RCW 43.22.340, [43.22.]355, [43.22.]360, [43.22.]432, [43.22.]440 and [43.22.]480. 96-21-146, § 296-150C-1590, filed 10/23/96, effective 11/25/96.] Repealed by 00-01-188, filed 12/22/99, effective 2/8/00. Statutory Authority: RCW 43.22.480.

296-150C-1600 What are the live load requirements of a vendor unit? [Statutory Authority: Chapter 43.22 RCW. 98-14-078, § 296-150C-1600, filed 6/30/98, effective 7/31/98. Statutory Authority: RCW 43.22.340, [43.22.]355, [43.22.]360, [43.22.]432, [43.22.]440 and [43.22.]480. 96-21-146, § 296-150C-1600, filed 10/23/96, effective 11/25/96.] Repealed by 00-01-188, filed 12/22/99, effective 2/8/00. Statutory Authority: RCW 43.22.480.

296-150C-1610 Design load deflection. [Statutory Authority: RCW 43.22.340, [43.22.]355, [43.22.]360, [43.22.]432, [43.22.]440 and [43.22.]480. 96-21-146, § 296-150C-1610, filed 10/23/96, effective 11/25/96.] Repealed by 00-01-188, filed 12/22/99, effective 2/8/00. Statutory Authority: RCW 43.22.480.

296-150C-1620 Structural load tests. [Statutory Authority: RCW 43.22.340, [43.22.]355, [43.22.]360, [43.22.]432, [43.22.]440 and [43.22.]480. 96-21-146, § 296-150C-1620, filed 10/23/96, effective 11/25/96.] Repealed by 00-01-188, filed 12/22/99, effective 2/8/00. Statutory Authority: RCW 43.22.480.

296-150C-1630 Roof coverings/membrane/weather resistant. [Statutory Authority: RCW 43.22.340, [43.22.]355, [43.22.]360, [43.22.]432, [43.22.]440 and [43.22.]480. 96-21-146, § 296-150C-1630, filed 10/23/96, effective 11/25/96.] Repealed by 00-01-188, filed 12/22/99, effective 2/8/00. Statutory Authority: RCW 43.22.480.

296-150C-1640 Floors. [Statutory Authority: RCW 43.22.340, [43.22.]355, [43.22.]360, [43.22.]432, [43.22.]440 and [43.22.]480. 96-21-146, § 296-150C-1640, filed 10/23/96, effective 11/25/96.] Repealed by 00-01-188, filed 12/22/99, effective 2/8/00. Statutory Authority: RCW 43.22.480.

296-150C-1650 Floor closure material. [Statutory Authority: RCW 43.22.340, [43.22.]355, [43.22.]360, [43.22.]432, [43.22.]440 and [43.22.]480. 96-21-146, § 296-150C-1650, filed 10/23/96, effective 11/25/96.] Repealed by 00-01-188, filed 12/22/99, effective 2/8/00. Statutory Authority: RCW 43.22.480.

296-150C-1660 Chassis approval. [Statutory Authority: RCW 43.22.340, [43.22.]355, [43.22.]360, [43.22.]432, [43.22.]440 and [43.22.]480. 96-21-146, § 296-150C-1660, filed 10/23/96, effective 11/25/96.] Repealed by 00-01-188, filed 12/22/99, effective 2/8/00. Statutory Authority: RCW 43.22.480.

296-150C-1670 Standards for equipment and installations. [Statutory Authority: RCW 43.22.340, [43.22.]355, [43.22.]360, [43.22.]432, [43.22.]440 and [43.22.]480. 96-21-146, § 296-150C-1670, filed 10/23/96, effective 11/25/96.] Repealed by 00-01-188, filed 12/22/99, effective 2/8/00. Statutory Authority: RCW 43.22.480.

296-150C-1680 Flame-spread limitations. [Statutory Authority: RCW 43.22.340, [43.22.]355, [43.22.]360, [43.22.]432, [43.22.]440 and [43.22.]480. 96-21-146, § 296-150C-1680, filed 10/23/96, effective 11/25/96.] Repealed by 00-01-188, filed 12/22/99, effective 2/8/00. Statutory Authority: RCW 43.22.480.

296-150C-1690 Cabinet protection. [Statutory Authority: RCW 43.22.340, [43.22.]355, [43.22.]360, [43.22.]432, [43.22.]440 and [43.22.]480. 96-21-146, § 296-150C-1690, filed 10/23/96, effective 11/25/96.] Repealed by 00-01-188, filed 12/22/99, effective 2/8/00. Statutory Authority: RCW 43.22.480.

296-150C-1700 Insulation standards. [Statutory Authority: RCW 43.22.340, [43.22.]355, [43.22.]360, [43.22.]432, [43.22.]440 and [43.22.]480. 96-21-146, § 296-150C-1700, filed 10/23/96, effective 11/25/96.] Repealed by 00-01-188, filed 12/22/99, effective 2/8/00. Statutory Authority: RCW 43.22.480.

296-150C-1710 Light and ventilation. [Statutory Authority: RCW 43.22.340, [43.22.]355, [43.22.]360, [43.22.]432, [43.22.]440 and [43.22.]480. 96-21-146, § 296-150C-1710, filed 10/23/96, effective 11/25/96.] Repealed by 00-01-188, filed 12/22/99, effective 2/8/00. Statutory Authority: RCW 43.22.480.

296-150C-1720 What requirements apply to vending unit exits? [Statutory Authority: Chapter 43.22 RCW. 98-14-078, § 296-150C-1720, filed 6/30/98, effective 7/31/98. Statutory Authority: RCW 43.22.340, [43.22.]355, [43.22.]360, [43.22.]432, [43.22.]440 and [43.22.]480. 96-21-146, § 296-150C-1720, filed 10/23/96, effective 11/25/96.] Repealed by 00-01-188, filed 12/22/99, effective 2/8/00. Statutory Authority: RCW 43.22.480.

296-150C-1730 What code and installation requirements apply to vendor unit electrical systems? [Statutory Authority: Chapter 43.22 RCW. 98-14-078, § 296-150C-1730, filed 6/30/98, effective 7/31/98. Statutory Authority: RCW 43.22.340, [43.22.]355, [43.22.]360, [43.22.]432, [43.22.]440 and [43.22.]480. 96-21-146, § 296-150C-1730, filed 10/23/96, effective 11/25/96.] Repealed by 00-01-188, filed 12/22/99, effective 2/8/00. Statutory Authority: RCW 43.22.480.

296-150C-1740 What are the mechanical requirements for a vendor unit? [Statutory Authority: Chapter 43.22 RCW. 98-14-078, § 296-150C-1740, filed 6/30/98, effective 7/31/98. Statutory Authority: RCW 43.22.340, [43.22.]355, [43.22.]360, [43.22.]432, [43.22.]440 and [43.22.]480. 96-21-146, § 296-150C-1740, filed 10/23/96, effective 11/25/96.] Repealed by 00-01-188, filed 12/22/99, effective 2/8/00. Statutory Authority: RCW 43.22.480.

296-150C-1750 What are the LPG system enclosure and mounting requirements for a vendor unit? [Statutory Authority: Chapter 43.22 RCW. 98-14-078, § 296-150C-1750, filed 6/30/98, effective 7/31/98.] Repealed by 00-01-188, filed 12/22/99, effective 2/8/00. Statutory Authority: RCW 43.22.480.

296-150C-1751 What are the fuel gas piping design requirements for a vendor unit? [Statutory Authority: Chapter 43.22 RCW. 98-14-078, § 296-150C-1751, filed 6/30/98, effective 7/31/98.] Repealed by 00-01-188, filed 12/22/99, effective 2/8/00. Statutory Authority: RCW 43.22.480.

296-150C-1752 Can gas tubing be concealed in a vendor unit? [Statutory Authority: Chapter 43.22 RCW. 98-14-078, § 296-150C-1752, filed 6/30/98, effective 7/31/98.] Repealed by 00-01-188, filed 12/22/99, effective 2/8/00. Statutory Authority: RCW 43.22.480.

296-150C-1753 What are the pipe-joint compound requirements for gas piping in a vendor unit? [Statutory Authority: Chapter 43.22 RCW. 98-14-078, § 296-150C-1753, filed 6/30/98, effective 7/31/98.] Repealed by 00-01-188, filed 12/22/99, effective 2/8/00. Statutory Authority: RCW 43.22.480.

296-150C-1754 What are the gas piping hanger and support requirements for a vendor unit? [Statutory Authority: Chapter 43.22 RCW. 98-14-078, § 296-150C-1754, filed 6/30/98, effective 7/31/98.] Repealed by 00-01-188, filed 12/22/99, effective 2/8/00. Statutory Authority: RCW 43.22.480.

296-150C-1755 What are the electrical bonding requirements for gas piping in a vendor unit? [Statutory Authority: Chapter 43.22 RCW. 98-14-078, § 296-150C-1755, filed 6/30/98, effective 7/31/98.] Repealed by 00-01-188, filed 12/22/99, effective 2/8/00. Statutory Authority: RCW 43.22.480.

296-150C-1756 How are gas supply connections in a vendor unit identified? [Statutory Authority: Chapter 43.22 RCW. 98-14-078, § 296-150C-1756, filed 6/30/98, effective 7/31/98.] Repealed by 00-01-188, filed 12/22/99, effective 2/8/00. Statutory Authority: RCW 43.22.480.

296-150C-1757 What requirements apply to gas piping system openings? [Statutory Authority: Chapter 43.22 RCW. 98-14-

078, § 296-150C-1757, filed 6/30/98, effective 7/31/98.] Repealed by 00-01-188, filed 12/22/99, effective 2/8/00. Statutory Authority: RCW 43.22.480.

296-150C-1758 Are gas piping shut-off valves required in a vendor unit? [Statutory Authority: Chapter 43.22 RCW. 98-14-078, § 296-150C-1758, filed 6/30/98, effective 7/31/98.] Repealed by 00-01-188, filed 12/22/99, effective 2/8/00. Statutory Authority: RCW 43.22.480.

296-150C-1759 What requirements apply to testing for gas piping leaks before vendor unit appliances are connected? [Statutory Authority: Chapter 43.22 RCW. 98-14-078, § 296-150C-1759, filed 6/30/98, effective 7/31/98.] Repealed by 00-01-188, filed 12/22/99, effective 2/8/00. Statutory Authority: RCW 43.22.480.

296-150C-1760 What requirements apply to testing for gas piping leaks after vendor unit appliances are connected? [Statutory Authority: Chapter 43.22 RCW. 98-14-078, § 296-150C-1760, filed 6/30/98, effective 7/31/98.] Repealed by 00-01-188, filed 12/22/99, effective 2/8/00. Statutory Authority: RCW 43.22.480.

296-150C-1770 Appliances—Installation. [Statutory Authority: RCW 43.22.340, [43.22.]355, [43.22.]360, [43.22.]432, [43.22.]440 and [43.22.]480. 96-21-146, § 296-150C-1770, filed 10/23/96, effective 11/25/96.] Repealed by 00-01-188, filed 12/22/99, effective 2/8/00. Statutory Authority: RCW 43.22.480.

296-150C-1780 Safety devices—Water heater relief valves. [Statutory Authority: RCW 43.22.340, [43.22.]355, [43.22.]360, [43.22.]432, [43.22.]440 and [43.22.]480. 96-21-146, § 296-150C-1780, filed 10/23/96, effective 11/25/96.] Repealed by 00-01-188, filed 12/22/99, effective 2/8/00. Statutory Authority: RCW 43.22.480.

296-150C-1790 Plumbing—General. [Statutory Authority: RCW 43.22.340, [43.22.]355, [43.22.]360, [43.22.]432, [43.22.]440 and [43.22.]480. 96-21-146, § 296-150C-1790, filed 10/23/96, effective 11/25/96.] Repealed by 00-01-188, filed 12/22/99, effective 2/8/00. Statutory Authority: RCW 43.22.480.

296-150C-1800 Plumbing—Definitions. [Statutory Authority: RCW 43.22.340, [43.22.]355, [43.22.]360, [43.22.]432, [43.22.]440 and [43.22.]480. 96-21-146, § 296-150C-1800, filed 10/23/96, effective 11/25/96.] Repealed by 00-01-188, filed 12/22/99, effective 2/8/00. Statutory Authority: RCW 43.22.480.

296-150C-1810 Drainage—Cap or plug. [Statutory Authority: RCW 43.22.340, [43.22.]355, [43.22.]360, [43.22.]432, [43.22.]440 and [43.22.]480. 96-21-146, § 296-150C-1810, filed 10/23/96, effective 11/25/96.] Repealed by 00-01-188, filed 12/22/99, effective 2/8/00. Statutory Authority: RCW 43.22.480.

296-150C-1820 Drainage—Clearance from drain outlet. [Statutory Authority: RCW 43.22.340, [43.22.]355, [43.22.]360, [43.22.]432, [43.22.]440 and [43.22.]480. 96-21-146, § 296-150C-1820, filed 10/23/96, effective 11/25/96.] Repealed by 00-01-188, filed 12/22/99, effective 2/8/00. Statutory Authority: RCW 43.22.480.

296-150C-1830 Water supply connection. [Statutory Authority: RCW 43.22.340, [43.22.]355, [43.22.]360, [43.22.]432, [43.22.]440 and [43.22.]480. 96-21-146, § 296-150C-1830, filed 10/23/96, effective 11/25/96.] Repealed by 00-01-188, filed 12/22/99, effective 2/8/00. Statutory Authority: RCW 43.22.480.

WAC 296-150C-0010 Authority, purpose, and scope. (1) This chapter is authorized by RCW 43.22.340 through 43.22.435 covering the construction, alteration and approval of commercial coaches sold, leased, or used in Washington state.

(2) This chapter applies to the approval of commercial coach manufacturers, dealers and to any person who manufactures or alters the plumbing, mechanical, or electrical system or the body or frame of a commercial coach.

[Statutory Authority: RCW 43.22.340, [43.22.]355, [43.22.]360, [43.22.]432, [43.22.]440 and [43.22.]480. 96-21-146, § 296-150C-0010, filed 10/23/96, effective 11/25/96.]

WAC 296-150C-0020 What definitions apply to this chapter? "Alteration" is the replacement, addition, modification, or removal of any equipment or installation that affects the construction, fire and life safety, or the plumbing, mechanical, and electrical systems of a commercial coach.

The following are not considered alterations:

- Repairs with approved parts;
- Modification of a fuel-burning appliance according to the listing agency's specifications; or
- Adjustment and maintenance of equipment.

"Approved" is approved by the department of labor and industries.

"Building site" is a tract, parcel, or subdivision of land on which a commercial coach will be installed.

"Consumer" is a person or organization, excluding a manufacturer or dealer of commercial coaches, who buys or leases a commercial coach.

"Commercial coach" is a structure (referred to as a unit) that:

- Can be transported in one or more sections;
- Is used for temporary commercial purposes;
- Is built on a permanent chassis;
- Conforms to the construction standards of this chapter;
- May include plumbing, mechanical, electrical and other systems.

Note: A commercial coach may not be used as a single-family dwelling or hazardous storage building. A commercial coach does not have to be placed on a permanent foundation.

"Damaged in transit" means damage that affects the integrity of a structural design or any of the systems.

"Dealer" is a person, company, or corporation whose business is leasing, selling, offering for lease or sale, buying, or trading commercial coaches.

"Department" is the department of labor and industries. The department may be referred to as "we" or "us" in this chapter. Note: You may contact us at: Department of Labor and Industries, Specialty Compliance, PO Box 44440, Olympia, WA 98504-4440.

"Design plan" is a plan for the construction or alteration of a commercial coach or conversion of a vehicle to a commercial coach including floor plans, elevation drawings, specifications, engineering data, or test results necessary for a complete evaluation of the design.

"Design option" is a design that a manufacturer may use as an option to its commercial coach design plan.

"Equipment" is all material, appliances, devices, fixtures, fittings, or accessories used in the manufacture, assembly, conversion to, or alteration of a commercial coach.

"Factory assembled structure (FAS) advisory board" is a board authorized to advise the director of the department regarding the issues and adoption of rules relating to commercial coaches. (See RCW 43.22.420.)

"Insignia" is a label that we attach to a commercial coach to verify that the structure meets the requirements of this chapter and the applicable codes.

"Install" is to erect, construct, assemble, or set a commercial coach in place.

"Labeled" is to bear the department's insignia.

"Listed" is a piece of equipment or apparatus that has been approved by a testing agency to the appropriate standard.

"Local enforcement agency" is an agency of city or county government with power to enforce local regulations governing the installation of a commercial coach.

"Master design plan" is a design plan that expires when a new state building code has been adopted.

"One-year design plan" is a design plan that expires one year after approval or when a new state building code has been adopted.

"System" is part of a commercial coach designed to serve a particular function. Examples include structural, plumbing, electrical, or mechanical systems.

[Statutory Authority: Chapter 43.22 RCW and 2003 c 291. 05-01-102, § 296-150C-0020, filed 12/14/04, effective 2/1/05. Statutory Authority: RCW 43.22.480. 00-01-187, § 296-150C-0020, filed 12/22/99, effective 2/8/00. Statutory Authority: Chapter 43.22 RCW. 98-14-078, § 296-150C-0020, filed 6/30/98, effective 7/31/98. Statutory Authority: RCW 43.22.340, [43.22.]355, [43.22.]360, [43.22.]432, [43.22.]440 and [43.22.]480. 96-21-146, § 296-150C-0020, filed 10/23/96, effective 11/25/96.]

WAC 296-150C-0030 How is this chapter enforced? (1) To enforce this chapter, we or another governmental inspection agency will inspect each commercial coach manufactured, sold, leased, or used in Washington state as required by this chapter. (See WAC 296-150C-0070 - reciprocal agreements.)

(2) We will inspect all commercial coach alterations.

(3) We will conduct inspections during normal work hours or at other reasonable times.

[Statutory Authority: RCW 43.22.340, [43.22.]355, [43.22.]360, [43.22.]432, [43.22.]440 and [43.22.]480. 96-21-146, § 296-150C-0030, filed 10/23/96, effective 11/25/96.]

WAC 296-150C-0040 Will you keep my manufacturing information confidential? We will only release manufacturing information such as design plans, specifications, and test results according to the requirements of the Public Records Act (see RCW 42.17.310 (1)(h)) unless we are ordered to do so by a court or otherwise required by law.

[Statutory Authority: RCW 43.22.340 and 43.22.420. 97-16-043, § 296-150C-0040, filed 7/31/97, effective 12/1/97. Statutory Authority: RCW 43.22.340, [43.22.]355, [43.22.]360, [43.22.]432, [43.22.]440 and [43.22.]480. 96-21-146, § 296-150C-0040, filed 10/23/96, effective 11/25/96.]

WAC 296-150C-0050 Can you prohibit the sale or lease of my commercial coach? (1) We may prohibit the sale or lease of your commercial coach because it is unlawful for any person to sell, lease, or offer for sale a commercial coach within this state if it violates any of the requirements of this chapter. (See RCW 43.22.345.)

(2) If an inspection reveals that a commercial coach violates this chapter, we may post a notice prohibiting the sale or lease of a commercial coach.

[Statutory Authority: RCW 43.22.340, [43.22.]355, [43.22.]360, [43.22.]432, [43.22.]440 and [43.22.]480. 96-21-146, § 296-150C-0050, filed 10/23/96, effective 11/25/96.]

WAC 296-150C-0060 Who handles consumer complaints about commercial coaches? (1) Consumer may file complaints within one year of the date of manufacture.

(2) The complaint should be in writing and describe the item(s) that may not comply with this chapter.

(3) After we receive the complaint, we will send the manufacturer and the dealer a copy of the complaint.

(4) The manufacturer and/or dealer have thirty days to respond. We shall base our actions on the response.

[Statutory Authority: RCW 43.22.340, [43.22.]355, [43.22.]360, [43.22.]432, [43.22.]440 and [43.22.]480. 96-21-146, § 296-150C-0060, filed 10/23/96, effective 11/25/96.]

WAC 296-150C-0070 Do you have reciprocal agreements with other states to inspect commercial coaches? (1) We have entered into reciprocal agreements with states who have inspection standards equal or greater than our standard.

(2) When we have a reciprocal agreement with another state:

(a) The reciprocal state inspects the commercial coaches manufactured in that state before shipment into Washington to ensure compliance with our laws. After inspection, the reciprocal state applies our insignia.

(b) The department inspects commercial coaches manufactured in Washington before shipment into the reciprocal state to ensure compliance with their laws. After inspection, we apply the insignia of the reciprocal state.

(3) We have reciprocal agreements on file.

[Statutory Authority: RCW 43.22.340, [43.22.]355, [43.22.]360, [43.22.]432, [43.22.]440 and [43.22.]480. 96-21-146, § 296-150C-0070, filed 10/23/96, effective 11/25/96.]

WAC 296-150C-0080 Do you allow a local enforcement agency to inspect commercial coaches at the manufacturing location? (1) A local enforcement agency (city or county), under contract with us, can inspect commercial coaches. In some cases, their contract may be limited to specific portions of an inspection at specified manufacturing locations.

(2) After approving a unit, the local enforcement agency will attach the insignia, which indicates that the unit has passed inspection.

[Statutory Authority: RCW 43.22.340, [43.22.]355, [43.22.]360, [43.22.]432, [43.22.]440 and [43.22.]480. 96-21-146, § 296-150C-0080, filed 10/23/96, effective 11/25/96.]

WAC 296-150C-0100 What happens if I disagree with your decision regarding my compliance with this chapter? (1) If we determine that you are in violation of this chapter, you will receive a notice of noncompliance. (See WAC 296-150C-0560.)

(2) If you disagree with our decision, you can send us a written request for a hearing, stating why you disagree.

(3) After we receive your hearing request, we will:

(a) Schedule a hearing within thirty days after we receive your request.

(b) Notify you of the time, date, and place for the hearing. If you fail to appear, your case will be dismissed.

(c) Hear your case.

(d) Send you written notice of our decision.

If you disagree with our decision, you may appeal it under the Administrative Procedure Act (chapter 34.05 RCW).

[Statutory Authority: RCW 43.22.340 and 43.22.420. 97-16-043, § 296-150C-0100, filed 7/31/97, effective 12/1/97. Statutory Authority: RCW

43.22.340, [43.22.]355, [43.22.]360, [43.22.]432, [43.22.]440 and [43.22.]480. 96-21-146, § 296-150C-0100, filed 10/23/96, effective 11/25/96.]

WAC 296-150C-0110 Do you have an advisory board to address commercial coach issues? The factory assembled structures (FAS) board advises us on issues relating to body and frame design, construction, alterations, plumbing, mechanical, electrical, installation, inspections, and rule adoption for commercial coaches. (See RCW 43.22.420.)

[Statutory Authority: RCW 43.22.340, [43.22.]355, [43.22.]360, [43.22.]432, [43.22.]440 and [43.22.]480. 96-21-146, § 296-150C-0110, filed 10/23/96, effective 11/25/96.]

WAC 296-150C-0120 Where can I obtain technical assistance regarding commercial coaches? We offer field technical service to commercial coach manufacturers for an hourly fee. (See WAC 296-150C-3000.) Field technical service may include evaluation, consultation, plan examination, interpretation, and clarification of technical data relating to the application of our rules. It does not include inspections.

[Statutory Authority: RCW 43.22.340, [43.22.]355, [43.22.]360, [43.22.]432, [43.22.]440 and [43.22.]480. 96-21-146, § 296-150C-0120, filed 10/23/96, effective 11/25/96.]

WAC 296-150C-0140 Do you allow the use of alternate materials, alternate design and method of construction? An applicant may apply for the use of alternate materials, alternate design and methods of construction different from the requirements of this chapter by filing a written request with the department.

(1) Responsibilities of applicant. The applicant must submit in writing the following information and sign and date the request.

(a) The applicant's name, address and phone number;

(b) The specific requirement or requirements from which the alternate material, alternate design or method of construction is requested;

(c) Justification that the requirements of this chapter cannot be met without using alternate materials, alternate design or method of construction;

(d) How the use of alternate materials, alternate design or method of construction will achieve the same result as the requirement and any specific alternative measures to be taken to show the alternate provides the same level of protection to life, safety and health as the requirements.

The department has a form that you may use for your request. Contact the department at the address shown in the definition section.

(2) Responsibilities of the department. The department will provide a written response to the applicant within thirty days of receipt of the written request. The written response will state the acceptance or denial of the request, including the reasons for the department's decision. At a minimum the department will base its decision based on:

(a) The applicant's request as described in subsection (1) of this section;

(b) Research into the request;

(c) Expert advise.

(3) Applicant's response to denials. The applicant may appeal the department's decision by following the procedure in WAC 296-150C-0100.

[Statutory Authority: RCW 43.22.340, 43.22.350, 43.22.355, 43.22.360, 43.22.400, 43.22.432, 43.22.433, 43.22.434, 43.22.450, 43.22.480, and 43.22.485. 00-17-148, § 296-150C-0140, filed 8/22/00, effective 9/30/00. Statutory Authority: RCW 43.22.340 and 43.22.480. 99-13-010, § 296-150C-0140, filed 6/4/99, effective 7/5/99.]

WAC 296-150C-0150 How does the department regulate commercial coaches that are used as medical units as defined in chapter 296-150V WAC? (1) Commercial coaches that are used as medical units may either:

(a) Comply with the requirements of this chapter; or

(b) Receive approval by the department to comply with the applicable requirements found in chapter 296-150V WAC.

(2) You must contact the department to receive the approval required in subsection (1)(b) of this section prior to using the commercial coach as a medical unit by demonstrating that the commercial coach is being used for medical unit purposes.

[Statutory Authority: RCW 43.22.340, 43.22.400, 43.22.432, 43.22.433, 43.22.434, 43.22.480, and 43.22.485, 2002 c 268, and chapter 43.22 RCW. 03-12-044, § 296-150C-0150, filed 5/30/03, effective 6/30/03.]

INSIGNIA

WAC 296-150C-0200 Who must obtain commercial coach insignia? (1) You must obtain an insignia from us for each commercial coach manufactured, sold, leased, or used in Washington state.

(2) You do not need an insignia for a commercial coach:

(a) When a unit has been used outside of the state for six months before being brought into Washington state (see RCW 43.22.380); or

(b) If a unit was manufactured prior to July 1, 1968. (See RCW 43.22.370.)

Note: All commercial coaches must have insignia if they are altered, this includes the exceptions in subsection (2)(a) and (b) of this section.

(3) You must obtain an insignia when commercial coaches are altered in Washington state.

(4) You must obtain an alteration insignia when a commercial coach is damaged in transit after leaving the manufacturing location or during an on-site installation, and an alteration or repair is necessary. The insignia indicates the commercial coach was altered or repaired.

(5) You must have an approved design plan and pass our inspection before we will attach an insignia.

[Statutory Authority: RCW 43.22.340, 43.22.350, 43.22.355, 43.22.360, 43.22.400, 43.22.432, 43.22.433, 43.22.434, 43.22.450, 43.22.480, and 43.22.485. 00-17-148, § 296-150C-0200, filed 8/22/00, effective 9/30/00. Statutory Authority: RCW 43.22.340, [43.22.]355, [43.22.]360, [43.22.]432, [43.22.]440 and [43.22.]480. 96-21-146, § 296-150C-0200, filed 10/23/96, effective 11/25/96.]

WAC 296-150C-0210 What are the insignia requirements? (1) If you are applying for insignia, you must have your design plan approved and your commercial coach inspected and approved by us.

(2) If you are a manufacturer, dealer or owner applying for an alteration insignia, your alteration must be inspected and approved by us. Approval of the design plan may also be required.

(3) We will attach the insignia to your commercial coach after:

(a) We receive the required forms and fees from you (see WAC 296-150C-3000); and

(b) Your commercial coach has passed final inspection.

[Statutory Authority: RCW 43.22.340, [43.22.]355, [43.22.]360, [43.22.]432, [43.22.]440 and [43.22.]480. 96-21-146, § 296-150C-0210, filed 10/23/96, effective 11/25/96.]

WAC 296-150C-0220 How do I obtain insignia information and the required forms? Upon request, we will provide you with a packet of information that includes the required forms.

[Statutory Authority: RCW 43.22.340, [43.22.]355, [43.22.]360, [43.22.]432, [43.22.]440 and [43.22.]480. 96-21-146, § 296-150C-0220, filed 10/23/96, effective 11/25/96.]

WAC 296-150C-0230 What are the insignia application requirements? (1) If you are requesting insignia for commercial coaches that you intend to manufacture under a *new design plan*, your completed application must include:

(a) A completed design-plan approval request form;

(b) One complete set of design plans, specifications, engineering analysis, and test procedures and results, plus one additional set for each manufacturing location where the design plan will be used.

(c) At least one set of design plans must have an original wet stamp from a professional engineer or architect licensed in Washington state. We will retain the set with the original wet stamp; and

(d) A one-time initial filing fee, the design-plan fee (if you want us to approve your design plan), and the fee for each insignia. (See WAC 296-150C-3000.)

(2) If you are requesting insignia under an *approved design plan*, your completed application must include:

(a) A completed insignia application form; and

(b) The fee for each commercial coach insignia (see WAC 296-150C-3000).

[Statutory Authority: RCW 43.22.340, [43.22.]355, [43.22.]360, [43.22.]432, [43.22.]440 and [43.22.]480. 96-21-146, § 296-150C-0230, filed 10/23/96, effective 11/25/96.]

WAC 296-150C-0240 What documentation do you need to perform an alteration inspection? (1) If you alter a commercial coach, we must inspect the alteration.

(2) Before we perform an alteration inspection and attach an alteration insignia, you must send us:

(a) A description of the proposed alteration;

(b) Applicable specifications, engineering analysis, test procedures and results for design-plan review;

(c) The plan review fee (if you want us to approve your design plan);

(d) The inspection fee; and

(e) The insignia application and fee. (See WAC 296-150C-3000.)

(3) A design plan review is not required if the alteration can be made without altering any of the existing structure.

[Statutory Authority: RCW 43.22.340, [43.22.]355, [43.22.]360, [43.22.]432, [43.22.]440 and [43.22.]480. 96-21-146, § 296-150C-0240, filed 10/23/96, effective 11/25/96.]

WAC 296-150C-0250 How do I replace lost or damaged insignia? (1) If an insignia is lost or damaged after it is placed on a commercial coach, you may obtain a replacement insignia.

(2) You should contact us and provide the following information:

(a) Your name, address, and telephone number;

(b) The name of the manufacturer or person converting the vendor unit;

(c) The serial number;

(d) The manufacturer number (CC#) if available;

(e) The insignia number if available; and

(f) The required fee. (See WAC 296-150C-3000.)

(3) If we can determine that your unit previously had an insignia, we will:

(a) Perform an inspection to ensure that no unauthorized remodeling has occurred;

Note: If unauthorized remodeling has occurred see WAC 296-150C-0200;

(b) Attach an insignia to your unit once we receive your insignia fee. (See WAC 296-150C-3000.)

[Statutory Authority: RCW 43.22.340, [43.22.]355, [43.22.]360, [43.22.]432, [43.22.]440 and [43.22.]480. 96-21-146, § 296-150C-0250, filed 10/23/96, effective 11/25/96.]

DESIGN PLAN

WAC 296-150C-0300 When is design-plan approval required? Design plans for commercial coaches are required for units that are sold, leased, or used in Washington state and must be approved when:

(1) You build a new unit;

(2) You modify an approved design plan through addendums;

(3) You add options to an approved design plan through addendums; or

(4) You change the occupancy classification of the building.

[Statutory Authority: RCW 43.22.340, [43.22.]355, [43.22.]360, [43.22.]432, [43.22.]440 and [43.22.]480. 96-21-146, § 296-150C-0300, filed 10/23/96, effective 11/25/96.]

WAC 296-150C-0310 Who can approve design plans? (1) Design plans can be approved by us or by a licensed professional or firm authorized by us. (See WAC 296-150C-0420 and 296-150C-0430.)

(2) All electrical design plans for new or altered electrical installations for educational institutions, health care facilities, and other buildings required by chapter 296-46 WAC, Safety standards—Installing electric wires and equipment—Administrative rules, must be reviewed and approved by us.

(3) A professional cannot approve plans submitted under a reciprocal agreement.

[Statutory Authority: Chapter 43.22 RCW. 98-14-078, § 296-150C-0310, filed 6/30/98, effective 7/31/98. Statutory Authority: RCW 43.22.340, [43.22.]355, [43.22.]360, [43.22.]432, [43.22.]440 and [43.22.]480. 96-21-146, § 296-150C-0310, filed 10/23/96, effective 11/25/96.]

DESIGN-PLAN APPROVAL BY THE DEPARTMENT

WAC 296-150C-0320 What must I provide with my request for commercial coach design-plan approval by the department? All requests for design-plan approval must include:

(1) A completed design-plan approval request form;

(2) Two sets of design plans plus elevation drawings, specifications, engineering analysis, and test results and procedures necessary for a complete evaluation of the design; (See WAC 296-150C-0340 and 296-150C-0350.)

(3) At least one set of design plans must have an original wet stamp from a professional engineer or architect licensed in Washington state. All new, renewed, and resubmitted plans, specifications, reports and structural calculations prepared by or prepared under his or her direct supervision shall be signed, dated and stamped with their seal. Specifications, reports, and structural calculations may be stamped only on the first sheet, provided this first sheet identifies all of the sheets that follow are included and identified in the same manner. Plans that have not been prepared by or under the engineer's or architect's supervision shall be reviewed by them and they shall prepare a report concerning the plans reviewed. This report shall:

(a) Identify which drawings have been reviewed by drawing number and date;

(b) Include a statement that the plans are in compliance with current Washington state regulations; and

(c) The report shall be stamped and signed by the reviewer.

Any deficiencies shall be corrected on the drawings before submitting to the department or be included in the report and identify as to how they are to be corrected. This report shall be attached to the plan(s) that were reviewed. We will retain the set with the original wet stamp;

(4) Receipt of a one-time initial design plan filing fee and the initial design plan fee (see WAC 296-150C-3000);

(5) A "key drawing" to show the arrangement of modules if the plan covers three or more modules;

(6) The occupancy class of the commercial coach according to the occupancy classifications in The Uniform Building Code;

(7) All plans required by WAC 296-46-140 (Plan review for educational, institutional or health care facilities and other buildings) must be reviewed by the department. The department's fee for this plan review is listed in the fee table in WAC 296-150C-3000, Commercial coach fees.

[Statutory Authority: RCW 43.22.340 and 43.22.480. 99-13-010, § 296-150C-0320, filed 6/4/99, effective 7/5/99. Statutory Authority: Chapter 43.22 RCW. 98-14-078, § 296-150C-0320, filed 6/30/98, effective 7/31/98. Statutory Authority: RCW 43.22.340, [43.22.]355, [43.22.]360, [43.22.]432, [43.22.]440 and [43.22.]480. 96-21-146, § 296-150C-0320, filed 10/23/96, effective 11/25/96.]

WAC 296-150C-0340 What must an engineering analysis for design plans include? (1) The engineering analysis must show that the structural design meets the requirements of this chapter.

(2) An engineering analysis must be conducted according to accepted engineering practices and must be signed by a professional engineer or architect licensed in Washington. (See WAC 296-150C-3000.)

[Statutory Authority: RCW 43.22.340, [43.22.]355, [43.22.]360, [43.22.]432, [43.22.]440 and [43.22.]480. 96-21-146, § 296-150C-0340, filed 10/23/96, effective 11/25/96.]

WAC 296-150C-0350 What must test procedures and results for design plans include? (1) Tests to a design must be witnessed by a professional engineer or architect licensed in Washington or by a departmental employee.

(2) Test reports must contain the following items:

(a) A description of the methods or standards that applied to the test;

(b) Drawings and a description of the item tested;

(c) A description of the test set-up;

(d) The procedure used to verify the correct load;

(e) The procedure used to measure each condition;

(f) Test data, including applicable graphs and observations of the characteristics and behavior of the item tested; and

(g) Analysis, comments, and conclusion.

(3) The written test procedures and conclusions must reference the applicable design plan.

[Statutory Authority: RCW 43.22.340, [43.22.]355, [43.22.]360, [43.22.]432, [43.22.]440 and [43.22.]480. 96-21-146, § 296-150C-0350, filed 10/23/96, effective 11/25/96.]

WAC 296-150C-0380 What happens if you approve my design plan? (1) Your design plan will be approved if it meets the requirements of this chapter.

(2) We will send you an approved copy of the design plan with the design-plan approval number.

(3) You must keep copies of the approved design plan available for inspection at each location where the commercial coach is built.

(4) If your design plan is not approved, you will be notified in writing of plan deficiencies. You may send a corrected design plan to us. (See WAC 296-150C-3000.)

[Statutory Authority: RCW 43.22.340, [43.22.]355, [43.22.]360, [43.22.]432, [43.22.]440 and [43.22.]480. 96-21-146, § 296-150C-0380, filed 10/23/96, effective 11/25/96.]

WAC 296-150C-0390 If my design plan is not approved, how much time do I have to submit a corrected design plan? (1) You have ninety days to correct and resubmit your original design plan and send us the resubmittal fee after we notify you of plan deficiencies. After ninety days, your initial design plan is returned to you.

(2) If you submit your corrected design plan after ninety days, the initial design plan fee is required instead of the resubmittal fee. (See WAC 296-150C-3000.)

[Statutory Authority: RCW 43.22.340, [43.22.]355, [43.22.]360, [43.22.]432, [43.22.]440 and [43.22.]480. 96-21-146, § 296-150C-0390, filed 10/23/96, effective 11/25/96.]

WAC 296-150C-0400 What happens after my design plan is approved? Once your design plan is approved, we will inspect each commercial coach.

[Statutory Authority: RCW 43.22.340, [43.22.]355, [43.22.]360, [43.22.]432, [43.22.]440 and [43.22.]480. 96-21-146, § 296-150C-0400, filed 10/23/96, effective 11/25/96.]

WAC 296-150C-0410 When does my design plan expire? *Commercial Coach - Master Design Plan*:

(1) Your commercial coach master design plan expires when there is a code change. You must submit new design plans for approval when there is a state building code cycle change. You may use your approved master design plans to order insignia as long as they comply with the applicable codes.

Commercial Coach - One-Year Design Plan:

(2) Your commercial coach one-year design plan expires either one year after approval or when there is a code change. You must submit new design plans for approval when there is a state building code cycle change. You may use your design plans to order insignia as long as they comply with the applicable codes.

(3) All National Electrical Code amendments may be incorporated by an addendum to your design plan.

Note: The state building code is on a three-year code cycle which coincides with the state building code council amendment cycle. The National Electrical Code (NEC) cycle, however, does not coincide with the other code cycles.

[Statutory Authority: RCW 43.22.480. 00-01-187, § 296-150C-0410, filed 12/22/99, effective 2/8/00. Statutory Authority: Chapter 43.22 RCW. 98-14-078, § 296-150C-0410, filed 6/30/98, effective 7/31/98. Statutory Authority: RCW 43.22.340, [43.22.]355, [43.22.]360, [43.22.]432, [43.22.]440 and [43.22.]480. 96-21-146, § 296-150C-0410, filed 10/23/96, effective 11/25/96.]

WAC 296-150C-0415 Who approves addendums to design plans approved by the department? You must have us approve an addendum to a design plan, if we initially approved your design plan.

[Statutory Authority: RCW 43.22.340, [43.22.]355, [43.22.]360, [43.22.]432, [43.22.]440 and [43.22.]480. 96-21-146, § 296-150C-0415, filed 10/23/96, effective 11/25/96.]

DESIGN-PLAN APPROVAL BY A LICENSED PROFESSIONAL OR FIRM

WAC 296-150C-0420 Who can be authorized to approve design plans? (1) A professional engineer, architect or firm licensed by the state of Washington according to the Engineers Registration Act, chapter 18.43 RCW and/or the Architects Registration Act, chapter 18.08 RCW; or

(2) A professional engineer, architect or firm licensed in another state that has licensing or certification requirements that meet or exceed Washington requirements.

[Statutory Authority: RCW 43.22.340, [43.22.]355, [43.22.]360, [43.22.]432, [43.22.]440 and [43.22.]480. 96-21-146, § 296-150C-0420, filed 10/23/96, effective 11/25/96.]

WAC 296-150C-0430 What information must a professional or firm provide to be authorized to approve design plans? (1) Name, a copy of your certificate of registration, and address of the professional engineer or architect; or

(2) Name, a copy of your certificate of authority, and address of the firm; and

(3) A description of the services the professional engineer, architect, or firm will provide; and

(4) A description of the professional's area(s) of expertise and qualifications which include:

(a) A summary of the professional's or firm's experience; and

(b) Verification of experience in your area of expertise such as structural, mechanical, plumbing, energy, electrical, fire and life safety, and ventilation and indoor air quality.

[Statutory Authority: RCW 43.22.340, [43.22.]355, [43.22.]360, [43.22.]432, [43.22.]440 and [43.22.]480. 96-21-146, § 296-150C-0430, filed 10/23/96, effective 11/25/96.]

WAC 296-150C-0440 How will I know whether I am authorized to approve design plans? Within sixty days after you submit the information requested in WAC 296-150C-0430, we will send you a letter either approving or denying your authorization request.

(1) If we approve your request, your name is added to the list of licensed professionals and firms authorized to approve design plans.

(a) We will authorize a professional to approve portions of a design plan within his or her area of expertise; and

(b) We will authorize an engineering or architectural firm to approve plans if the firm employs or contracts with professionals within the area of expertise necessary for the design plan.

(2) If we do not approve your request, we will notify you in writing why we are denying your request for authorization. If you disagree with our decision, you can send us a written request for a hearing, stating why you disagree. (See WAC 296-150C-0100.)

[Statutory Authority: RCW 43.22.340, [43.22.]355, [43.22.]360, [43.22.]432, [43.22.]440 and [43.22.]480. 96-21-146, § 296-150C-0440, filed 10/23/96, effective 11/25/96.]

WAC 296-150C-0450 How long is a licensed professional or firms authorization effective? Your authorization to approve design plans is effective until your license expires, is revoked or is suspended.

(1) You must notify us of your license renewal at least fifteen days before your license expires, to prevent your name from being removed from our licensed professional and firm list.

(2) You must notify us immediately if your license is revoked or suspended. Your name is then removed from the list of licensed professionals and firms authorized to approve design plans.

[Statutory Authority: RCW 43.22.340, [43.22.]355, [43.22.]360, [43.22.]432, [43.22.]440 and [43.22.]480. 96-21-146, § 296-150C-0450, filed 10/23/96, effective 11/25/96.]

WAC 296-150C-0460 What information must a manufacturer provide when a professional or firm does the design-plan approval? You must provide the following information with your approved design plans:

(1) A completed departmental design-plan approval request form;

(2) Two or more sets of design plans plus elevation drawings, specifications, engineering analysis, and test results and procedures necessary for a complete evaluation of the design. These design plans must have an original wet stamp, be signed, and dated by the approving professional(s) (see WAC 296-150C-0340 and 296-150C-0350);

(3) A cover sheet on the design plan noting which professional approved each portion of the design plan;

(4) A copy of the authorization letter from us;

(5) The design plan fee for design plans approved by professionals or firms; (see WAC 296-150C-3000.)

(6) A professional who designs and certifies that the commercial coach design meets state requirements cannot also approve the design plan in the plan approval process;

(7) A professional cannot approve those electrical designs listed in WAC 296-150C-0310(2); and

(8) A professional cannot approve plans submitted under a reciprocal agreement.

[Statutory Authority: Chapter 43.22 RCW. 98-14-078, § 296-150C-0460, filed 6/30/98, effective 7/31/98. Statutory Authority: RCW 43.22.340, [43.22.]355, [43.22.]360, [43.22.]432, [43.22.]440 and [43.22.]480. 96-21-146, § 296-150C-0460, filed 10/23/96, effective 11/25/96.]

WAC 296-150C-0470 What happens after we receive the professional or firm approved design plan and information? (1) After we receive your approved design plans and information, we will review the information and assign a plan approval number. We will send a copy of the design plan with the plan approval number to the manufacturer.

(2) We may periodically audit design plans approved by a professional engineer, architect, or firm to ensure compliance with design plan requirements. The department's periodic audit should not be construed as certifying that the plans are safe.

(3) If the audit reveals that the design plans approved by the professionals and firms do not comply with this chapter, you will be notified and required to pay our fees for review and approval of the design plans. (See WAC 296-150C-3000.)

[Statutory Authority: RCW 43.22.340, [43.22.]355, [43.22.]360, [43.22.]432, [43.22.]440 and [43.22.]480. 96-21-146, § 296-150C-0470, filed 10/23/96, effective 11/25/96.]

WAC 296-150C-0480 Do you have a list of professionals or firms that are authorized to approve design plans? We will maintain a list of the licensed professionals and firms that are authorized to approve design plans for commercial coaches.

[Statutory Authority: RCW 43.22.340, [43.22.]355, [43.22.]360, [43.22.]432, [43.22.]440 and [43.22.]480. 96-21-146, § 296-150C-0480, filed 10/23/96, effective 11/25/96.]

WAC 296-150C-0490 Who approves addendums to design plans approved by a professional or firm? (1) You must have the professional or firm approve an addendum to a design plan, if they initially approved your design plan.

(2) If the professional or firm who approved your design plan is no longer on the department list you may have us approve your addendum.

[Statutory Authority: RCW 43.22.340, [43.22.]355, [43.22.]360, [43.22.]432, [43.22.]440 and [43.22.]480. 96-21-146, § 296-150C-0490, filed 10/23/96, effective 11/25/96.]

INSPECTIONS PRIOR TO ISSUANCE OF AN INSIGNIA

WAC 296-150C-0500 When is an inspection required? (1) Before we issue an insignia, each unit manufactured or converted must be inspected as many times as required to show compliance with this chapter.

Note: Each commercial coach must have a serial number so we can track inspections.

(2) Before we issue an insignia, each commercial coach must be inspected at the manufacturing location as many times as required. Inspections may include but are not limited to:

(a) A "cover" inspection during construction of the unit before the electrical, plumbing, mechanical, and structural systems are covered;

(b) Insulation and vapor barrier inspection, if required; and

(c) A final inspection after the commercial coach is complete.

(3) If we discover a violation during inspection, we will issue a notice of noncompliance. You can correct the violation during the inspection. If you cannot correct the violation during inspection, you must leave the item uncovered until we approve your correction.

(4) If a commercial coach is damaged in transit to the building site or during on-site installation, it must be inspected. This is considered an alteration inspection. (See WAC 296-150C-0240.)

(5) Approved design plans must be available in compliance with the applicable sections of the adopted state codes.

(6) Once your unit is inspected and approved we will attach the insignia.

[Statutory Authority: RCW 43.22.480. 00-01-187, § 296-150C-0500, filed 12/22/99, effective 2/8/00. Statutory Authority: Chapter 43.22 RCW. 98-14-078, § 296-150C-0500, filed 6/30/98, effective 7/31/98. Statutory Authority: RCW 43.22.340, [43.22.]355, [43.22.]360, [43.22.]432, [43.22.]440 and [43.22.]480. 96-21-146, § 296-150C-0500, filed 10/23/96, effective 11/25/96.]

WAC 296-150C-0510 How do I request an inspection? (1) You must contact us, and we will let you know where your request for inspection should be submitted. Our address is noted in the definition of department.

(2) We must receive in-state inspection requests at least seven calendar days prior to the date that you want the inspection.

(3) We must receive out-of-state inspection requests at least fourteen calendar days prior to the date that you want the inspection.

[Statutory Authority: RCW 43.22.340, [43.22.]355, [43.22.]360, [43.22.]432, [43.22.]440 and [43.22.]480. 96-21-146, § 296-150C-0510, filed 10/23/96, effective 11/25/96.]

WAC 296-150C-0520 What happens if my commercial coach passes inspection? If your commercial coach passes inspection and you have met the other requirements of this chapter, we will attach the insignia.

[Statutory Authority: RCW 43.22.340, [43.22.]355, [43.22.]360, [43.22.]432, [43.22.]440 and [43.22.]480. 96-21-146, § 296-150C-0520, filed 10/23/96, effective 11/25/96.]

WAC 296-150C-0530 Am I charged if I request an inspection but I am not prepared? (1) If you ask us to inspect a commercial coach within Washington state but you

are not prepared when we arrive, you must pay the inspection fee and travel. (See WAC 296-150C-3000.)

(2) If you ask us to inspect a commercial coach outside Washington state but you are not prepared when we arrive, you must pay the inspection fee, travel, and per diem expenses. (See WAC 296-150C-3000.)

[Statutory Authority: RCW 43.22.340, [43.22.]355, [43.22.]360, [43.22.]432, [43.22.]440 and [43.22.]480. 96-21-146, § 296-150C-0530, filed 10/23/96, effective 11/25/96.]

WAC 296-150C-0540 Who inspects commercial coach installation at the building site? The local enforcement agency (city or county) must approve the installation.

Note: The local enforcement agency may not open the concealed construction of a commercial coach to inspect it if our insignia is attached.

Note: Alterations to commercial coaches must be inspected and approved by us.

[Statutory Authority: RCW 43.22.340, [43.22.]355, [43.22.]360, [43.22.]432, [43.22.]440 and [43.22.]480. 96-21-146, § 296-150C-0540, filed 10/23/96, effective 11/25/96.]

WAC 296-150C-0550 Do you allow a commercial coach to be completed at the installation site? Commercial coaches must be completed at the manufacturing location before an insignia is attached.

[Statutory Authority: RCW 43.22.340, [43.22.]355, [43.22.]360, [43.22.]432, [43.22.]440 and [43.22.]480. 96-21-146, § 296-150C-0550, filed 10/23/96, effective 11/25/96.]

WAC 296-150C-0560 What happens if I receive a notice of noncompliance after inspection of the alteration to my commercial coach? (1) If your commercial coach alteration does not pass our inspection, you will receive a notice of noncompliance. The notice of noncompliance explains what items must be corrected.

(2) You have twenty days after receiving the notice of noncompliance to send us a written response to explain how you will correct the violations.

(3) You are not allowed to sell, lease, offer for sale or use the altered commercial coach until you correct the violations. We must inspect and approve the corrections, and you must pay the inspection and insignia fees, if required (see WAC 296-150C-3000).

[Statutory Authority: Chapter 43.22 RCW. 98-14-078, § 296-150C-0560, filed 6/30/98, effective 7/31/98. Statutory Authority: RCW 43.22.340, [43.22.]355, [43.22.]360, [43.22.]432, [43.22.]440 and [43.22.]480. 96-21-146, § 296-150C-0560, filed 10/23/96, effective 11/25/96.]

USED COMMERCIAL COACHES WITHOUT AN INSIGNIA

WAC 296-150C-0580 Must I obtain an insignia for used commercial coaches? All used commercial coaches that are to be installed on a building site or used in Washington state must have an insignia of approval from us. (See exceptions WAC 296-150C-0200 (1)(a)(b).)

[Statutory Authority: RCW 43.22.340, [43.22.]355, [43.22.]360, [43.22.]432, [43.22.]440 and [43.22.]480. 96-21-146, § 296-150C-0580, filed 10/23/96, effective 11/25/96.]

WAC 296-150C-0590 How do I obtain insignia for used commercial coaches? We consider used commercial coaches as new units for purposes of insignia approval. To obtain insignia, you must:

(1) Have the design plan approved (see WAC 296-150C-0300 through 296-150C-0480);

(2) Purchase insignia (see WAC 296-150C-0200 through 296-150C-0230); and

(3) Pass a unit inspection (see WAC 296-150C-0500 through 296-150C-0560).

Note: You will be required to open up as much of the construction of the unit as is necessary for inspection to show compliance with your approved design plan.

[Statutory Authority: RCW 43.22.340, [43.22.]355, [43.22.]360, [43.22.]432, [43.22.]440 and [43.22.]480. 96-21-146, § 296-150C-0590, filed 10/23/96, effective 11/25/96.]

MANUFACTURER'S NOTICE TO THE DEPARTMENT

WAC 296-150C-0700 Must manufacturers of commercial coaches notify you if they manufacture at more than one location? (1) If you are manufacturing commercial coaches at more than one location, approved design plans must be available at each manufacturing location.

(2) You must send us the following information for each manufacturing location:

(a) Company name;

(b) Mailing and physical address; and

(c) Phone and fax number if available.

(3) You must update this information as it changes.

[Statutory Authority: RCW 43.22.340, [43.22.]355, [43.22.]360, [43.22.]432, [43.22.]440 and [43.22.]480. 96-21-146, § 296-150C-0700, filed 10/23/96, effective 11/25/96.]

WAC 296-150C-0710 Must manufacturers of commercial coaches notify you of a change in business name or address? (1) If you are moving you must notify us in writing prior to a change of business name or address.

(2) Your notice must include the change of name and address.

[Statutory Authority: RCW 43.22.340, [43.22.]355, [43.22.]360, [43.22.]432, [43.22.]440 and [43.22.]480. 96-21-146, § 296-150C-0710, filed 10/23/96, effective 11/25/96.]

WAC 296-150C-0720 Must manufacturers of commercial coaches notify you of a change in business ownership? (1) When a manufacturer changes ownership, the new owner must notify us in writing immediately.

(2) A new owner may continue to manufacture the units according to a prior approved design plan if the prior owner provides written releases of the design plan.

[Statutory Authority: RCW 43.22.340, [43.22.]355, [43.22.]360, [43.22.]432, [43.22.]440 and [43.22.]480. 96-21-146, § 296-150C-0720, filed 10/23/96, effective 11/25/96.]

COMMERCIAL COACH CONSTRUCTION CODE

GENERAL

WAC 296-150C-0800 What manufacturing codes apply to commercial coaches? (1) All design, construction,

and installations of commercial coaches must conform with the following codes and the requirements of this chapter:

(a) The latest adopted version of the Washington State Ventilation and Indoor Air Quality Code, as adopted by chapter 51-13 WAC;

(b) The structural and other requirements of this chapter;

(c) Occupancy classification only from chapter 3 of The International Building Code, 2003 edition as adopted and amended by chapter 51-50 WAC, except commercial coaches must not be group H or R-3 occupancy;

(d) Accessibility requirements of chapter 11 of The International Building Code, 2003 edition as adopted and amended by chapter 51-50 WAC;

(e) Section 1607 Uniform and concentrated floor loads and footnotes of The International Building Code, 2003 edition as adopted and amended by chapter 51-50 WAC;

(f) The International Mechanical Code, 2003 edition as adopted and amended by chapter 51-52 WAC except when conflicting with the provisions of this chapter, this chapter controls;

(g) The National Electrical Code as referenced in chapter 19.28 RCW and chapter 296-46B WAC;

(h) The latest adopted version of the Washington State Energy Code, as adopted according to chapter 19.27A RCW;

(i) The Uniform Plumbing Code, as adopted and amended according to chapter 19.27 RCW;

(j) Where there is a conflict between codes, an earlier named code takes precedent over a later named code. Where, in any specific case, different sections of this code specify different materials, methods of construction or other requirements, the most restrictive governs. Where there is a conflict between a general requirement and a special requirement, the specific requirement must be applicable.

(2) All construction methods and installations must use accepted engineering practices, provide minimum health and safety to the occupants of commercial coaches and the public, and demonstrate journeyman quality of work of the various trades.

(3) Requirements for any size, weight, or quality of material modified by the terms "minimum," "not less than," "at least," and similar expressions are minimum standards. The manufacturer may exceed these rules provided the deviation does not result in inferior installation or defeat the purpose and intent of this chapter.

Note: The codes, RCW's and WAC's referenced in this rule are available to view at the Washington State Library, the Washington State Law Library, and may also be available at your local library.

[Statutory Authority: Chapter 43.22 RCW and 2003 c 291. 05-01-102, § 296-150C-0800, filed 12/14/04, effective 2/1/05. Statutory Authority: RCW 43.22.350, 43.22.434, 43.22.480, 43.22.500, 18.27.040, 18.27.070, 18.27.075, 70.87.030, 19.28.041, 19.28.051, 19.28.101, 19.28.121, 19.28.161, 19.28.201, 19.28.211, 19.28.341, 2001 c 7, 2002 c 249, and chapters 19.28, 43.22, 18.27, and 70.87 RCW. 02-12-022, § 296-150C-0800, filed 5/28/02, effective 6/28/02. Statutory Authority: Chapter 43.22 RCW. 98-14-078, § 296-150C-0800, filed 6/30/98, effective 7/31/98. Statutory Authority: RCW 43.22.340, [43.22.]355, [43.22.]360, [43.22.]432, [43.22.]440 and [43.22.]480. 96-21-146, § 296-150C-0800, filed 10/23/96, effective 11/25/96.]

WAC 296-150C-0805 Are there any special requirements for portable school classrooms? In addition to the requirements in this chapter, the department of health has rules regulating primary and secondary schools in chapter 246-366 WAC. One of those requirements in WAC 246-366-050(2) is that "Instructional areas shall have a minimum average ceiling height of 8 feet."

[Statutory Authority: RCW 43.22.340 and 43.22.480. 99-13-010, § 296-150C-0805, filed 6/4/99, effective 7/5/99.]

WAC 296-150C-0810 Construction definitions. The following definitions and the definitions in each of the state codes adopted in WAC 296-150C-0800 apply to commercial coach construction.

"Anchoring system" is the means used to secure a commercial coach to ground anchors or to other approved fastening devices. It may include straps, cables, turnbuckles, bolts, fasteners, or other components.

"Ceiling height" is the clear vertical distance from the finished floor to the finished ceiling.

"Chassis" means that portion of the transportation system comprised of the following: Drawbar coupling mechanism and frame.

EXCEPTION: The running gear assembly shall not be considered as part of the chassis.

"Dead load" is the vertical load resulting from the weight of all permanent structural and nonstructural parts of a commercial coach including walls, floors, roof, partitions, and fixed service equipment.

"Diagonal tie" is a tie intended primarily to resist horizontal or shear forces and secondarily may resist vertical, uplift, and overturning forces.

"Dormitory" is a room designed to be occupied by more than two persons.

"Exit" is a continuous and unobstructed means of egress to a public way.

"Frame" means the fabricated rigid substructure, which provides support to the affixed commercial coach structure both during transport and onsite. It is considered a part of the commercial coach.

"Glazed opening" is a glazed skylight or an exterior window or glazing of a door of a commercial coach.

"Gross floor area" is the net floor area within the enclosing walls of a room where the ceiling is at least five feet high.

"Habitable room" is a room or enclosed floor space arranged for living, eating, food preparation, or dormitory sleeping purposes. It does not include bathrooms, toilet compartments, foyers, hallways, or other accessory floor spaces. Any reference to "habitable dwelling" in this chapter means a temporary structure not used as a single family dwelling.

"Interior finish" is the surface material of walls, fixed or movable partitions, ceilings and other exposed interior surfaces affixed to the commercial coach structure, including paint and wallpaper. Decorations or furnishings attached to the commercial coach structure are considered part of the interior finish.

"Live load" is the weight superimposed by the use and occupancy of the commercial coach, including wind load and snow load, but not including dead load.

"Perimeter blocking" is support placed under exterior walls.

"Shear wall" is a wall designed and constructed to transfer lateral loads.

"Tiedown" is a device designed to anchor a commercial coach to ground anchors.

"Use" or "occupancy classification" is the designed purpose of a commercial coach according to The Uniform Building Code.

"Wind load" is the lateral or vertical pressure or uplift created by wind blowing in any direction.

[Statutory Authority: RCW 43.22.340 and 43.22.480. 99-13-010, § 296-150C-0810, filed 6/4/99, effective 7/5/99. Statutory Authority: RCW 43.22.340, [43.22.]355, [43.22.]360, [43.22.]432, [43.22.]440 and [43.22.]480. 96-21-146, § 296-150C-0810, filed 10/23/96, effective 11/25/96.]

STRUCTURAL

WAC 296-150C-0820 What are the basic structural requirements of a commercial coach? Each commercial coach must be designed and constructed as a completely integrated structure capable of sustaining the design-load requirements of this chapter. It shall be capable of:

(1) Transmitting these loads to stabilizing devices without causing unsafe deformation or abnormal structural movement; and

(2) Withstanding the adverse effects of transportation shock and vibration as an integrated structure.

[Statutory Authority: Chapter 43.22 RCW. 98-14-078, § 296-150C-0820, filed 6/30/98, effective 7/31/98. Statutory Authority: RCW 43.22.340, [43.22.]355, [43.22.]360, [43.22.]432, [43.22.]440 and [43.22.]480. 96-21-146, § 296-150C-0820, filed 10/23/96, effective 11/25/96.]

WAC 296-150C-0830 Fastening of structural systems. Roof framing must be securely fastened to wall framing, walls to floor structure, and floor structure to chassis. This must secure and maintain continuity between the floor and chassis and resist wind uplift, overturning, and sliding as imposed by design loads.

[Statutory Authority: RCW 43.22.340, [43.22.]355, [43.22.]360, [43.22.]432, [43.22.]440 and [43.22.]480. 96-21-146, § 296-150C-0830, filed 10/23/96, effective 11/25/96.]

WAC 296-150C-0840 Live loads. (1) The design live loads must be established according to this chapter and must be considered to be uniformly distributed.

(2) The roof live load must not be considered as acting simultaneously with the wind load. The roof and the floor live loads must not be considered as resisting the overturning moment due to wind. The roof live load and the floor live load must be considered to act both simultaneously and separately in order to determine the critical design loading for stresses and deflections.

[Statutory Authority: RCW 43.22.340, [43.22.]355, [43.22.]360, [43.22.]432, [43.22.]440 and [43.22.]480. 96-21-146, § 296-150C-0840, filed 10/23/96, effective 11/25/96.]

WAC 296-150C-0850 Roof loads. All roofs must be designed to sustain loads as follows:

(1) Dead loads plus a minimum unit live load of 30 lb/ft2 (2 months load duration); and

(2) A vertical net uplift load of 9 lb/ft2 (1 day load duration).

[Statutory Authority: RCW 43.22.340, [43.22.]355, [43.22.]360, [43.22.]432, [43.22.]440 and [43.22.]480. 96-21-146, § 296-150C-0850, filed 10/23/96, effective 11/25/96.]

WAC 296-150C-0860 Snow loads. The roof of a commercial coach must be designed for the loads to which it will be subjected in areas where snow records or experience indicate snow loads in excess of 30 lb/ft2.

[Statutory Authority: RCW 43.22.340, [43.22.]355, [43.22.]360, [43.22.]432, [43.22.]440 and [43.22.]480. 96-21-146, § 296-150C-0860, filed 10/23/96, effective 11/25/96.]

WAC 296-150C-0870 Standard wind loads. The commercial coach and each wind resisting part must be designed for the following wind loads:

Horizontal	15 lb/ft2	(1 day load duration)
Vertical upward	9 lb/ft2	(1 day load duration)
Vertical downward	(see WAC 296-150C-0850 Roof loads)	

A commercial coach must be designed for higher wind loads if area records or experience indicate that it will be subjected to wind loads in excess of the above loads if required by the local jurisdiction.

[Statutory Authority: RCW 43.22.340, [43.22.]355, [43.22.]360, [43.22.]432, [43.22.]440 and [43.22.]480. 96-21-146, § 296-150C-0870, filed 10/23/96, effective 11/25/96.]

WAC 296-150C-0880 Windstorm protection—Provisions for support and anchoring. (1) Each commercial coach must have provisions for support and anchoring systems that, when properly designed and installed, will resist overturning and lateral movement of the commercial coach as imposed by the respective design loads. Support and anchoring systems can be installed according to the Table in WAC 296-150C-1210 or designed by a professional engineer.

(2) The manufacturer of each commercial coach is required to make provision for the support and anchoring systems but is not required to provide the anchoring equipment or stabilizing devices.

(3) The manufacturer must provide printed instructions with each commercial coach specifying the location and required capacity of stabilizing devices on which the design is based.

Single-Wide Commercial Coaches:

(4) The provisions made for anchoring systems must be based on the following design criteria for single-wide commercial coaches:

(a) The minimum number of ties required per side is noted in WAC 296-150C-1210.

(b) Ties must be as evenly spaced as practicable along the length of the commercial coach. No more than eight feet open-end spacing must occur on each end.

(c) If continuous straps are provided as vertical ties, they must be positioned at rafters and studs. If a vertical tie and diagonal tie are located at the same place, both ties may be connected to a single ground anchor, as long as, the anchor used is capable of carrying both loads.

(d) Add-on sections of expandable commercial coaches must have provisions for vertical ties at the exposed ends.

Double-Wide Commercial Coaches:

(5) Double-wide commercial coaches require only diagonal ties specified in the table in WAC 296-150C-1210. The ties must be placed along the outer side walls.

(6) Protection must be provided at sharp corners where the anchoring system requires the use of external cables or straps. Protection must also be provided to minimize damage to roofing or siding by the cable or strap.

(7) Anchoring equipment must be capable of resisting an allowable working load equal to or exceeding 3,150 pounds and must be capable of withstanding a 50 percent overload (*4,725 pounds total*) without failure of either the anchoring equipment or the attachment point on the commercial coach.

(8) Exposed anchoring equipment must have a resistance to weather deterioration at least equal to that provided by a coating of zinc on steel of at least 0.30 ounces per square foot of surface coated.

(a) Slit or cut edges of zinc-coated steel strapping do not need to be zinc-coated.

(b) Type 1, Class B, Grade 1 steel strapping, 1 1/4 inches wide and 0.035 inch thick, conforming with Federal Specification QQ-S-781-G, meets the requirements of this paragraph.

[Statutory Authority: RCW 43.22.340, [43.22.]355, [43.22.]360, [43.22.]432, [43.22.]440 and [43.22.]480. 96-21-146, § 296-150C-0880, filed 10/23/96, effective 11/25/96.]

WAC 296-150C-0900 Interior walls and partitions. Interior walls and partitions must be:

(1) Constructed with structural capacity adequate for the intended purpose; and

(2) Capable of resisting a horizontal load of at least five pounds per square foot without exceeding the deflections specified in WAC 296-150C-0920.

[Statutory Authority: RCW 43.22.340, [43.22.]355, [43.22.]360, [43.22.]432, [43.22.]440 and [43.22.]480. 96-21-146, § 296-150C-0900, filed 10/23/96, effective 11/25/96.]

WAC 296-150C-0910 Minimum uniform and concentrated live loads. See use or occupancy of the 2003 edition of The International Building Code for group occupancy loads.

[Statutory Authority: Chapter 43.22 RCW and 2003 c 291. 05-01-102, § 296-150C-0910, filed 12/14/04, effective 2/1/05. Statutory Authority: RCW 43.22.340, 43.22.350, 43.22.355, 43.22.360, 43.22.400, 43.22.432, 43.22.433, 43.22.434, 43.22.450, 43.22.480, and 43.22.485. 00-17-148, § 296-150C-0910, filed 8/22/00, effective 9/30/00. Statutory Authority: RCW 43.22.340, [43.22.]355, [43.22.]360, [43.22.]432, [43.22.]440 and [43.22.]480. 96-21-146, § 296-150C-0910, filed 10/23/96, effective 11/25/96.]

WAC 296-150C-0920 Design load deflection. When a structural assembly is subjected to total design live loads, the deflection for structural framing members must not exceed the following:

L = The clear span between supports or two times the length of a cantilever.

Floor	L/240
Roof and ceiling	L/180
Headers, beams, girders	L/180
Walls and partitions	L/180

[Statutory Authority: RCW 43.22.340, [43.22.]355, [43.22.]360, [43.22.]432, [43.22.]440 and [43.22.]480. 96-21-146, § 296-150C-0920, filed 10/23/96, effective 11/25/96.]

WAC 296-150C-0930 Structural load tests. (1) A structural assembly or subassembly tested for qualification must sustain the design dead load plus the superimposed design live loads (see WAC 296-150C-0840) equal to 1.75 times the required live loads for a period of twelve hours without failure of the assembly or subassembly, unless otherwise specified in this chapter.

(2) An assembly or subassembly failure is defined as a rupture, fracture, or residual deflection which is greater than the limits set in WAC 296-150C-0920. The type and quality of material used in each test assembly or subassembly must be identified. The assembly or subassembly tested must represent the minimum quality of material.

(3)(a) Nationally recognized standards or engineering practices must be used for structural load tests for commercial coaches.

(b) Tests must be witnessed by a professional engineer or architect.

Note: We will provide test procedure forms upon request.

[Statutory Authority: RCW 43.22.340, [43.22.]355, [43.22.]360, [43.22.]432, [43.22.]440 and [43.22.]480. 96-21-146, § 296-150C-0930, filed 10/23/96, effective 11/25/96.]

CONSTRUCTION

WAC 296-150C-0940 Fastening of structural systems. Roof framing must be securely fastened to wall framing, walls to floor structure, and floor structure to chassis to secure and maintain continuity between the floor and chassis and to resist wind uplift, overturning, and sliding as imposed by design loads.

[Statutory Authority: RCW 43.22.340, [43.22.]355, [43.22.]360, [43.22.]432, [43.22.]440 and [43.22.]480. 96-21-146, § 296-150C-0940, filed 10/23/96, effective 11/25/96.]

WAC 296-150C-0950 Roof coverings/membrane/weather resistant. (1)(a) The roof covering must be securely fastened in an approved manner to the supporting roof construction and must provide weather protection for the commercial coach and the occupants. The roof covering must be installed according to the manufacturer's instructions and approved by us.

(b) Roofing membranes must be rigid enough to prevent deflection that would permit ponding of water or separation of seams due to snow or wind or during assembly or transportation.

(2) Exterior covering materials, including metal coverings, must be moisture and weather-resistant and contain corrosion resistant fasteners to prevent wind and rain deterioration.

Note: Electro-plated, electro-deposited zinc, and electro-galvanized staples are not considered corrosion resistant materials.

(3) All exterior openings or penetrations into the commercial coach around piping, ducts, plenums, or vents must be sealed with moisture resistant material.

[Statutory Authority: RCW 43.22.340, [43.22.]355, [43.22.]360, [43.22.]432, [43.22.]440 and [43.22.]480. 96-21-146, § 296-150C-0950, filed 10/23/96, effective 11/25/96.]

WAC 296-150C-0960 What requirements apply to commercial coach roof trusses? (1) The construction of roof trusses must be approved by a professional engineer. Roof trusses may be produced by one of the following methods:

(a) Use of graded materials when an approved testing agency certifies truss construction and load requirements are met; the testing agency must prepare an approved quality control program which allows them to test the trusses with appropriate testing procedures.

(b) Use of nongraded materials, if each truss is tested in an approved testing jig at the manufacturer's site with a load equivalent to full design load (1.75 times the full design load sustained for 12 hours). See WAC 296-150C-0930.

(2)(a) Representative trusses must be tested from the production line, when we request. The approved testing agency or engineer must submit the testing report to us.

(b) All test reports are to be stamped, signed, and dated by the approved testing agency or engineer who performs the test.

(c) These tests must not occur more than two times a year per design unless there are problems with the roof trusses.

(d) The manufacturer is required to maintain an acceptable quality level not exceeding one percent using acceptable sampling procedures.

Note: The acceptable quality level is defined as the maximum allowable percentage of defective units.

[Statutory Authority: RCW 43.22.340 and 43.22.480. 99-13-010, § 296-150C-0960, filed 6/4/99, effective 7/5/99. Statutory Authority: Chapter 43.22 RCW. 98-14-078, § 296-150C-0960, filed 6/30/98, effective 7/31/98. Statutory Authority: RCW 43.22.340, [43.22.]355, [43.22.]360, [43.22.]432, [43.22.]440 and [43.22.]480. 96-21-146, § 296-150C-0960, filed 10/23/96, effective 11/25/96.]

WAC 296-150C-0970 Roof construction. (1) All roofs must be framed and tied into the framework and supporting walls to form an integral part of the commercial coach.

(2) All trusses must be laterally braced.

(3) All roof decks must be designed and built with sufficient slope or camber to assure adequate drainage, or must be designed to support maximum loads including possible ponding of water due to deflection.

(4) Cutting roof framework members for passage of electrical, plumbing, or mechanical systems is prohibited except where substantiated by engineering analysis.

(5) Electrical, plumbing, or mechanical systems must not penetrate the roofing membrane unless the penetration point is adequately sealed.

(6) Ventilation. Enclosed attics and enclosed rafter spaces formed where ceilings are applied directly to the underside of roof rafters shall have cross ventilation for each separate space by ventilating openings protected against the entrance of rain and snow. Where eave or cornice vents are installed, insulation shall not block the free flow of air. A minimum of 1 inch of air space shall be provided between the insulation and roof sheathing. The net free ventilating area shall not be less than 1/150 of the space ventilated, except:

(a) The area may be 1/300, provided 50 percent of the required opening area is provided by ventilators located in the upper portion of the space to be ventilated at least 3 feet above eave or cornice vents; or

(b) A vapor barrier not exceeding 1 perm is installed on the warm side of the attic insulation.

[Statutory Authority: RCW 43.22.340, 43.22.350, 43.22.355, 43.22.360, 43.22.400, 43.22.432, 43.22.433, 43.22.434, 43.22.450, 43.22.480, and 43.22.485. 00-17-148, § 296-150C-0970, filed 8/22/00, effective 9/30/00. Statutory Authority: RCW 43.22.340, [43.22.]355, [43.22.]360, [43.22.]432, [43.22.]440 and [43.22.]480. 96-21-146, § 296-150C-0970, filed 10/23/96, effective 11/25/96.]

WAC 296-150C-0990 Sealing wall exterior openings. All exterior wall openings or penetrations into the commercial coach around piping, ducts, plenums, or vents must be sealed with moisture-resistant material.

[Statutory Authority: RCW 43.22.340, [43.22.]355, [43.22.]360, [43.22.]432, [43.22.]440 and [43.22.]480. 96-21-146, § 296-150C-0990, filed 10/23/96, effective 11/25/96.]

WAC 296-150C-1000 Drilling or notching of wood wall structural members. (1) **Cutting and notching.** In exterior walls and bearing partitions, any wood stud may be cut or notched to a depth not exceeding 25 percent of its width. Cutting or notching of studs to a depth not greater than 40 percent of the width of the stud is permitted in nonbearing partitions supporting no loads other than the weight of the partition.

(2) **Bored holes.** A hole not greater in diameter than 40 percent of the stud width may be bored in any wood stud. Bored holes not greater than 60 percent of the width of the stud are permitted in nonbearing partitions or in any wall where each bored stud is doubled, provided not more than two such successive doubled studs are so bored.

In no case shall the edge of the bored hole be nearer than 5/8 inch (16mm) to the edge of the stud. Bored holes shall not be located at the same section of stud as a cut or notch.

(3) Drilling or notching of studs greater than allowed in subsection (1) or (2) of this section must be substantiated by engineering analysis.

[Statutory Authority: RCW 43.22.340, [43.22.]355, [43.22.]360, [43.22.]432, [43.22.]440 and [43.22.]480. 96-21-146, § 296-150C-1000, filed 10/23/96, effective 11/25/96.]

WAC 296-150C-1020 Wall construction. Walls must be of sufficient strength to withstand the load requirements of this chapter. The connections between the bearing walls, floor, and roof framework members must be fabricated to provide support for the material used to enclose the commercial coach and to provide for the transfer of all lateral and vertical loads to the floor and the chassis.

[Statutory Authority: RCW 43.22.340, [43.22.]355, [43.22.]360, [43.22.]432, [43.22.]440 and [43.22.]480. 96-21-146, § 296-150C-1020, filed 10/23/96, effective 11/25/96.]

WAC 296-150C-1030 Fire-blocking. (1) Fire-blocking must be provided in commercial coaches to cut off all concealed draft openings in all stud walls and partitions, including furred spaces at the ceiling and floor levels and at ten foot intervals both vertical and horizontal.

(2) Fire-blocking must be provided around vents, pipes, ducts, chimneys, fireplaces, and similar openings which afford a passage for fire at ceiling and floor levels, with noncombustible material.

(3) Fire blocking must be two inch nominal lumber, gypsum board, cement asbestos board, mineral fiber or other approved materials securely fastened in place.

[Statutory Authority: RCW 43.22.340, [43.22.]355, [43.22.]360, [43.22.]432, [43.22.]440 and [43.22.]480. 96-21-146, § 296-150C-1030, filed 10/23/96, effective 11/25/96.]

WAC 296-150C-1040 Floors. (1) Wood floors or subfloors in kitchens, bathrooms (including toilet compartments), laundry rooms, water heater compartments, and any other areas subject to excessive moisture must be moisture resistant; or they must be made moisture resistant by sealing or by an overlay of nonabsorbent material applied with water-resistant adhesive.

(2) Carpeting cannot be used under a heat producing appliance unless the appliance is listed for such use.

[Statutory Authority: RCW 43.22.340, [43.22.]355, [43.22.]360, [43.22.]432, [43.22.]440 and [43.22.]480. 96-21-146, § 296-150C-1040, filed 10/23/96, effective 11/25/96.]

WAC 296-150C-1050 Drilling or notching of wood joist structural members. (1) Notches on the ends of joists must not exceed one-fourth the joist depth, unless substantiated by engineering design or approved tests.

(2) Holes bored in joists must not be within two inches of the top or bottom of the joist, and the diameter of any such hole must not exceed one-third of the depth of the joist.

(3) Notches in the top or bottom of the joists must not exceed one-sixth the depth and must not be located in the middle third of the span.

(4) Joists in transverse floor framing systems, which do not have perimeter blocking, must not be drilled or notched, unless substantiated by engineering design or approved tests.

[Statutory Authority: RCW 43.22.340, [43.22.]355, [43.22.]360, [43.22.]432, [43.22.]440 and [43.22.]480. 96-21-146, § 296-150C-1050, filed 10/23/96, effective 11/25/96.]

WAC 296-150C-1060 Fastening of structural systems. Roof framing must be securely fastened to wall framing, walls to floor structure, and floor structure to chassis to secure and maintain continuity between these elements to resist wind uplift, overturning and sliding imposed by the design loads.

[Statutory Authority: RCW 43.22.340, [43.22.]355, [43.22.]360, [43.22.]432, [43.22.]440 and [43.22.]480. 96-21-146, § 296-150C-1060, filed 10/23/96, effective 11/25/96.]

WAC 296-150C-1070 Floor closure material. The closure material must meet ASTM D-781 standard or equal and be installed as follows:

(1) Fibrous material (with or without patches) must meet or exceed the level of 48 inch-pounds of puncture resistance as tested.

(2) The material must be installed according to installation instructions furnished by the supplier of the material.

(3) Patching material must be suitable for patches and the patch life must be equivalent to the material life.

(4) Floor closure material around piping, ducts, plenums, or vents must prevent damage to the underside of the commercial coach due to air, water, insects, dust, and must be rodent resistant.

[Statutory Authority: RCW 43.22.340, 43.22.350, 43.22.355, 43.22.360, 43.22.400, 43.22.432, 43.22.433, 43.22.434, 43.22.450, 43.22.480, and 43.22.485. 00-17-148, § 296-150C-1070, filed 8/22/00, effective 9/30/00. Statutory Authority: RCW 43.22.340, [43.22.]355, [43.22.]360, [43.22.]432, [43.22.]440 and [43.22.]480. 96-21-146, § 296-150C-1070, filed 10/23/96, effective 11/25/96.]

WAC 296-150C-1080 What design and construction requirements apply to a commercial coach chassis? Each commercial coach chassis must be designed and constructed to be capable of:

(1) Effectively sustaining the design loads consisting of the dead load plus five PSF load on the floor and the superimposed dynamic load resulting from highway movement, in no case shall the dynamic load be required to exceed twice the dead load; and

(2) Accepting the shock and vibration from the roadway and towing vehicle through the use of adequate running gear assemblies.

(3) In the set up mode, the commercial coach must be designed to accommodate the design live floor load established in WAC 296-150C-0800 (1)(e).

[Statutory Authority: Chapter 43.22 RCW and 2003 c 291. 05-01-102, § 296-150C-1080, filed 12/14/04, effective 2/1/05. Statutory Authority: RCW 43.22.340 and 43.22.480. 99-13-010, § 296-150C-1080, filed 6/4/99, effective 7/5/99. Statutory Authority: Chapter 43.22 RCW. 98-14-078, § 296-150C-1080, filed 6/30/98, effective 7/31/98. Statutory Authority: RCW 43.22.340, [43.22.]355, [43.22.]360, [43.22.]432, [43.22.]440 and [43.22.]480. 96-21-146, § 296-150C-1080, filed 10/23/96, effective 11/25/96.]

MATERIALS

WAC 296-150C-1090 Standards for equipment and installations. The manufacturer's equipment and installation specifications must be followed. Other approved standards are acceptable when:

- Installed according to the manufacturer's installation instructions; and
- Approved by a listing or testing agency.

[Statutory Authority: RCW 43.22.340, [43.22.]355, [43.22.]360, [43.22.]432, [43.22.]440 and [43.22.]480. 96-21-146, § 296-150C-1090, filed 10/23/96, effective 11/25/96.]

WAC 296-150C-1100 Flame-spread limitations. (1) The interior finish of all walls and partitions must have a flame-spread rating not exceeding two hundred except as otherwise specified in this section. The flame-spread limitation does not apply to:

(a) Molding, trim, windows, doors, or series of doors four feet wide or less;

(b) Permanently attached decorative items such as pictures or accent panels constituting a maximum of ten percent of the aggregate wall surface in any room or space or more than thirty-two square feet in surface area, whichever is less.

(2) All ceiling interior finish must have a maximum flame-spread rating of two hundred, excluding molding and trim two inches wide or less.

(3) Furnace and water heater spaces must be enclosed by walls, ceiling, and doors having an interior finish with a maximum flame-spread of twenty-five.

(4) Combustible kitchen cabinet doors, countertops, exposed bottom and end panels must have a maximum flame-spread of twenty-five. Cabinet rails, stiles, mullions, and toe strips are exempted.

(5) Exposed interior finishes adjacent to the cooking range must have a flame-spread of fifty. Adjacent surfaces are the exposed vertical surfaces between the range top and the overhead cabinets or ceiling and within six horizontal inches of the cooking range.

(6) Finish surfaces of plastic bath tubs, shower units and tub or shower doors must have a flame-spread of two hundred.

[Statutory Authority: RCW 43.22.340, [43.22.]355, [43.22.]360, [43.22.]432, [43.22.]440 and [43.22.]480. 96-21-146, § 296-150C-1100, filed 10/23/96, effective 11/25/96.]

WAC 296-150C-1110 Combustible limitations. (1) The exposed wall adjacent to the cooking range, must be fifty flame-spread or less, such as 5/16 inch gypsum board or material having equivalent fire protective properties.

(2) All openings for pipes and vents in furnace and water heater spaces shall be tight-fitted or fire-stopped.

[Statutory Authority: RCW 43.22.340, [43.22.]355, [43.22.]360, [43.22.]432, [43.22.]440 and [43.22.]480. 96-21-146, § 296-150C-1110, filed 10/23/96, effective 11/25/96.]

WAC 296-150C-1120 Kitchen cabinet protection. The bottom and sides of combustible kitchen cabinets over cooking ranges or tops including a space of six inches from the edge of the burners must be protected with at least materials rated at 25 or less flame-spread covered with at least twenty-six gauge sheet metal (.017 stainless steel, .024 aluminum or .020 copper) or equivalent protection. The protective metal over the range must form a hood with at least a three-inch eyebrow (measuring horizontally from face of cabinet). The hood must be centered over and at least as wide as the top of the cooking range.

[Statutory Authority: RCW 43.22.340, [43.22.]355, [43.22.]360, [43.22.]432, [43.22.]440 and [43.22.]480. 96-21-146, § 296-150C-1120, filed 10/23/96, effective 11/25/96.]

WAC 296-150C-1130 Insulation standards. Insulation standards for commercial coaches must comply with the Washington State Energy Code, unless another state law supersedes the Washington State Energy Code.

[Statutory Authority: RCW 43.22.340, [43.22.]355, [43.22.]360, [43.22.]432, [43.22.]440 and [43.22.]480. 96-21-146, § 296-150C-1130, filed 10/23/96, effective 11/25/96.]

WAC 296-150C-1140 Room sizes. (1) Every habitable room must have a minimum ceiling height of not less than seven feet.

(2) No habitable room, except a kitchen, must be less than five feet in any clear horizontal dimension.

[Statutory Authority: RCW 43.22.340, [43.22.]355, [43.22.]360, [43.22.]432, [43.22.]440 and [43.22.]480. 96-21-146, § 296-150C-1140, filed 10/23/96, effective 11/25/96.]

WAC 296-150C-1150 Hallways. (1) Hallways in structures required to meet accessibility standards must have a minimum horizontal dimension that conforms to accessibility standards set by the Washington state Uniform Building Code standards set in the accessibility standard in WAC 296-150C-0800 (1)(d).

(2) Hallways in nonaccessible construction site trailers must have a minimum horizontal dimension of 32 inches.

[Statutory Authority: Chapter 43.22 RCW and 2003 c 291. 05-01-102, § 296-150C-1150, filed 12/14/04, effective 2/1/05. Statutory Authority: RCW 43.22.340, [43.22.]355, [43.22.]360, [43.22.]432, [43.22.]440 and [43.22.]480. 96-21-146, § 296-150C-1150, filed 10/23/96, effective 11/25/96.]

WAC 296-150C-1160 Accessibility standards. When applicable, a commercial coach must meet the accessibility standards set by the Washington State Building Code in RCW 19.27.030(5).

[Statutory Authority: RCW 43.22.340, [43.22.]355, [43.22.]360, [43.22.]432, [43.22.]440 and [43.22.]480. 96-21-146, § 296-150C-1160, filed 10/23/96, effective 11/25/96.]

WAC 296-150C-1170 What are the lighting and ventilation requirements of a commercial coach? (1) Habitable rooms must be provided with exterior windows or doors having a total glazed area of at least ten percent of the floor area, or they must have artificial light.

(2) An area equal to a minimum of five percent of the floor area must be available for unobstructed ventilation. Glazed areas do not need to be opened if a mechanical ventilation system is provided. The mechanical ventilation system must be capable of producing a change of air in the room every thirty minutes with at least one-fifth of the air supply taken from outside the commercial coach.

(3) Each bathroom must be provided with artificial light and with external windows or a mechanical exhaust must be provided.The external window must have at least 1/2 square feet of glazed area fully able to open. A mechanical ventilation system must be capable of producing a change of air every twelve minutes. Any mechanical ventilation system must exhaust directly to the outside of the commercial coach.

[Statutory Authority: Chapter 43.22 RCW. 98-14-078, § 296-150C-1170, filed 6/30/98, effective 7/31/98. Statutory Authority: RCW 43.22.340, [43.22.]355, [43.22.]360, [43.22.]432, [43.22.]440 and [43.22.]480. 96-21-146, § 296-150C-1170, filed 10/23/96, effective 11/25/96.]

WAC 296-150C-1175 Glass and glazed openings. The provisions of this section shall apply to the installation of glass or glazed openings, including hazardous locations.

(1) Standards. Standards for material shall meet International Building Code Section 2406.1.

(2) Identification. Flat glass shall bear the manufacturer's label designating the type and thickness of glass. Safety glazing shall have the manufacturer's identification etched or ceramic fired on the glass and be visible when the unit is glazed.

(3) Wind loads. Exterior glass and glazing shall be capable of withstanding a wind pressure of 20 pounds per square foot.

(4) Hazardous locations. The following shall be considered specific hazardous locations for the purposes of glazing:

(a) Glazing in ingress and egress doors;

(b) Glazing in fixed and sliding panels of sliding door assemblies and panels in swinging doors other than wardrobe doors;

(c) Glazing in storm doors;

(d) Glazing in fixed or operable panels adjacent to a door where the nearest exposed edge of the glazing is within a 24-inch arc of either vertical edge of the door in a closed position;

(e) Glazing in a fixed or operable panel, other than locations in (d) of this subsection, that meets all of the following conditions:

(i) Exposed area of an individual pane greater than 9 square feet.

(ii) Exposed bottom edge less than 18 inches above the floor;

(f) Shower doors and tub enclosures.

[Statutory Authority: Chapter 43.22 RCW and 2003 c 291. 05-01-102, § 296-150C-1175, filed 12/14/04, effective 2/1/05. Statutory Authority: RCW 43.22.340, 43.22.350, 43.22.355, 43.22.360, 43.22.400, 43.22.432, 43.22.433, 43.22.434, 43.22.450, 43.22.480, and 43.22.485. 00-17-148, § 296-150C-1175, filed 8/22/00, effective 9/30/00.]

WAC 296-150C-1180 Commercial coach exits. When applicable, a commercial coach must comply with International Building Code, Chapter 11 Accessibility and with the following requirements:

(1) Commercial coaches must have at least two exterior doors that are remote from each other. Remote means that in:

(a) Single-wide units the doors may not be less than twelve feet apart; and

(b) Multiwide units the doors may not be less than twenty feet apart, center to center from each other measured in a straight line direction regardless of the length of travel between doors.

Exception: A commercial coach that is twenty-four feet long or less needs only one exit door, unless it has a dormitory sleeping area.

(2) Exterior doors must be constructed for exterior use. Exterior doors must provide at least a thirty-five inch wide by seventy-nine inch high clear opening (36" x 80" door). Each swinging exterior door must have a key-operated lock that has a deadlock latch. A deadlock with a passage set installed below the deadlock may be used as an acceptable alternate for each exterior door. The locking mechanism must be engaged or disengaged by the use of a lever or other device from the interior of the commercial coach. Locks must not require the use of a key for operation from the inside.

(3) Every room designed for dormitory sleeping, unless it has an exterior exit door, must have at least one window which can be opened from the inside without using tools. This window must provide a clear opening of at least twenty-two inches in its smallest dimension and five square feet in area with the bottom of the opening not more than three feet above the floor. If a screen or storm window is used it must be readily removable without using tools.

[Statutory Authority: Chapter 43.22 RCW and 2003 c 291. 05-01-102, § 296-150C-1180, filed 12/14/04, effective 2/1/05. Statutory Authority: RCW 43.22.340, [43.22.]355, [43.22.]360, [43.22.]432, [43.22.]440 and [43.22.]480. 96-21-146, § 296-150C-1180, filed 10/23/96, effective 11/25/96.]

WAC 296-150C-1190 Interior privacy. If a commercial coach interior door, such as a bathroom door, has a privacy lock, the lock must contain an emergency release. The emergency release must be on the outside to permit entry when the door is locked from the inside.

[Statutory Authority: RCW 43.22.340, [43.22.]355, [43.22.]360, [43.22.]432, [43.22.]440 and [43.22.]480. 96-21-146, § 296-150C-1190, filed 10/23/96, effective 11/25/96.]

WAC 296-150C-1195 Fire warning equipment—Automatic smoke detectors. (1) At least one smoke detector (which may be a single station smoke detector) must be installed in each commercial coach to protect each separate bedroom. Smoke detectors must meet the requirements of the Standard for Single and Multiple Station Smoke Detectors of the Underwriters Laboratories Inc. (UL 217). All dormitories must have at least one installed smoke detector.

(2) A smoke detector must be installed in the hallway or area next to the bedroom, and must be mounted, where possible, between the commercial area and the first bedroom door on an interior wall. Where mounting cannot be achieved due to limited interior wall space, the smoke detector must be located as close as practical to the first bedroom door on an interior wall. Commercial coaches having bedrooms separated by one or a combination of common use areas (such as a kitchen, dining area, or a commercial area, but, not a bathroom) must have at least two smoke detectors, one smoke detector protecting each bedroom.

(3) Smoke detectors must be installed per their listing. The smoke detector mounting must be attached to an electrical outlet box and the detector must be permanently wired into a general purpose electrical circuit. There must be no switches in the circuits to the detectors other than the circuit breaker serving the circuits.

(4) The commercial coach manufacturer must provide a copy of the testing and maintenance instructions supplied by the manufacturer of the smoke detector for the information of the consumer and users of the commercial coach.

[Statutory Authority: RCW 43.22.340, [43.22.]355, [43.22.]360, [43.22.]432, [43.22.]440 and [43.22.]480. 96-21-146, § 296-150C-1195, filed 10/23/96, effective 11/25/96.]

WAC 296-150C-1200 Installation instructions. The manufacturer must provide printed instructions upon request for each commercial coach specifying the following:

(1) The location and required capacity of stabilizing devices, such as tie downs, piers, and blocking;

(2) Devices and methods used to connect all components and systems including, chassis and utilities; and

(3) Leveling, including releveling.

[Statutory Authority: RCW 43.22.340, [43.22.]355, [43.22.]360, [43.22.]432, [43.22.]440 and [43.22.]480. 96-21-146, § 296-150C-1200, filed 10/23/96, effective 11/25/96.]

WAC 296-150C-1210 Table: Number of ties required per side of commercial coach.

NUMBER OF TIES REQUIRED PER SIDE OF COMMERCIAL COACH

Note: This table is based on a minimum working load per anchor of three thousand one hundred fifty pounds with a fifty per-

cent overload (four thousand seven hundred twenty-five pounds total).

Length of Commercial Coach (Feet)	No. of Vertical Ties	No. of Diagonal Ties
00-40	2	3
41-46	2	3
47-49	2	3
50-54	2	3
55-58	2	4
59-64	2	4
65-70	2	4

(1) Double-width commercial coaches require only the diagonal ties specified, and these must be placed along the outer side walls;

(2) Length of commercial coach (as used in this table) means length excluding draw bar;

(3) Diagonal ties in this method must deviate at least forty degrees from a vertical direction; or

(4) The number of ties required can be designed by a professional engineer.

[Statutory Authority: RCW 43.22.340, [43.22.]355, [43.22.]360, [43.22.]432, [43.22.]440 and [43.22.]480. 96-21-146, § 296-150C-1210, filed 10/23/96, effective 11/25/96.]

ELECTRICAL

WAC 296-150C-1220 Electrical—General. This chapter applies to the installation of electrical equipment in any commercial coach bearing or required to bear a department insignia.

[Statutory Authority: RCW 43.22.340, [43.22.]355, [43.22.]360, [43.22.]432, [43.22.]440 and [43.22.]480. 96-21-146, § 296-150C-1220, filed 10/23/96, effective 11/25/96.]

WAC 296-150C-1230 Electrical definitions. Definitions contained in the current adopted edition National Electrical Code (NEC), and the following definitions apply to the commercial coach electrical standards in this chapter.

"Converter" is a device that changes electrical energy from one form to another, as from alternating current to direct current.

"Feeder assembly" or "subpanel" is the overhead or under-chassis feeder conductor, including the grounding conductor, fittings, and equipment, or power-supply cord approved for commercial coach.

The feeder assembly or subpanel is used in commercial coaches and designed to deliver energy from the source of electrical supply to the distribution panelboard within the commercial coach.

"Low voltage" is an electromotive force rated at thirty-two volts or less, supplied from a transformer, converter, or battery.

[Statutory Authority: RCW 43.22.340, [43.22.]355, [43.22.]360, [43.22.]432, [43.22.]440 and [43.22.]480. 96-21-146, § 296-150C-1230, filed 10/23/96, effective 11/25/96.]

WAC 296-150C-1240 Branch circuit and feeder calculations. Branch circuit and feeder calculations must be determined according to the National Electrical Code.

[Statutory Authority: RCW 43.22.340, [43.22.]355, [43.22.]360, [43.22.]432, [43.22.]440 and [43.22.]480. 96-21-146, § 296-150C-1240, filed 10/23/96, effective 11/25/96.]

WAC 296-150C-1250 Disconnecting means and branch circuit protective equipment. (1) The branch circuit equipment may be combined with the disconnecting means as a single assembly. Such a combination may be designated as a distribution panelboard. If a fused distribution panelboard is used, the maximum fuse size for the mains must be plainly marked with lettering at least 1/4 inch high and visible when fuses are changed.

Note: See the National Electrical Code concerning identification of each disconnecting means and each feeder or branch circuit at the point where it originated and type of marking needed.

(2) Plug fuses and fuseholders must be tamper-resistant, Type "S," enclosed in dead-front fuse panelboards.

(3) A single disconnecting means must be provided in each commercial coach. It must consist of a circuit breaker or a switch, fuses, and their accessories installed in a readily accessible location near the point of entrance of the supply cord or conductors into the commercial coach. The main circuit breakers or fuses must be plainly marked "main." This equipment must contain a solderless type of grounding connector or bar for the purposes of grounding, with sufficient terminals for all grounding conductors. The neutral bar termination of the grounded circuit conductors must be insulated.

(4) The disconnecting equipment must have a rating suitable for the connected load. The distribution equipment, either circuit breaker or fused type, must be located a minimum of twenty-four inches from the bottom of such equipment to the floor level of the commercial coach. There must be an accessible space of at least thirty inches wide by thirty-six inches deep by seventy-eight inches high in front of the electrical disconnect equipment. The main circuit breakers or switches must be plainly marked "main." There must be a label attached to the panelboard stating:

"This panelboard must be connected by a feeder assembly having overcurrent protection rated at not more than _____amperes." (The correct ampere rating must be marked in the blank space.)

(5) Branch circuit distribution equipment must be installed in each commercial coach and must include overcurrent protection for each branch circuit consisting of either circuit breakers or fuses.

(6) The branch circuit overcurrent devices must be rated:

(a) Not more than the circuit conductors; and

(b) Not more than one hundred fifty percent of the rating of a single appliance rated ten amperes or more; but

(c) Not more than the overcurrent protection rating marked on the motor-operated appliance. A device not approved for branch circuit protection, such as a thermal cutout or motor overload protective device, must not be considered as the overcurrent device protecting the circuit.

(7) A 20-ampere fuse or circuit breaker must be considered adequate protection for fixture leads, cords for portable appliances and No. 14 AWG (American Wire Gauge) tap

conductors, not over six feet long, for recessed lighting fixtures.

(8) If more than one outlet or load is on a branch circuit, a 15-ampere receptacle must be considered protected by a 20-ampere fuse or circuit breaker.

(9) When circuit breakers are provided for branch circuit protection, 240-volt circuits must be protected by two-pole common or companion trip circuit breakers.

[Statutory Authority: RCW 43.22.340, [43.22.]355, [43.22.]360, [43.22.]432, [43.22.]440 and [43.22.]480. 96-21-146, § 296-150C-1250, filed 10/23/96, effective 11/25/96.]

WAC 296-150C-1260 Power supply—Feeder assembly equipment. A commercial coach must be provided with feeder assembly equipment, installed by the manufacturer according to National Electrical Code and the provisions of this chapter. The assembly must be either:

(1) One overhead assembly containing the required number of insulated color-coded feeder conductors, one of which must be a grounding conductor; or

(2) One under-vehicle assembly consisting of conduit running from the commercial coach branch circuit panelboard to the underside of the commercial coach. Conduit must be sized in accordance with the National Electrical Code; or

(3) Other installations approved by the department.

[Statutory Authority: RCW 43.22.340, [43.22.]355, [43.22.]360, [43.22.]432, [43.22.]440 and [43.22.]480. 96-21-146, § 296-150C-1260, filed 10/23/96, effective 11/25/96.]

WAC 296-150C-1270 Identification of feeder assembly connection. (1) Each commercial coach equipped with a 120-volt electrical system must have a label, permanently attached on the outside wall adjacent to the point of entrance of the feeder assembly, that reads:

"THIS CONNECTION IS FOR 110-125 VOLT AC SERVICE. DO NOT CONNECT HIGHER VOLTAGE."

(2) Each commercial coach equipped with a 120/240-volt AC electrical system must have a label, permanently attached on the outside wall, adjacent to the point of entrance of the supply assembly or permanently installed feeders, that reads:

"THIS CONNECTION IS FOR 120/240 VOLT AC____AMPERE SERVICE." (The correct service rating shall be stamped in the blank space.)

(3) Each commercial coach equipped with a 480/277-volt electrical system must have a label, permanently attached on the outside wall, adjacent to the point of entrance of the supply assembly or permanently installed feeders, that reads:

"THIS CONNECTION IS FOR 480/277 VOLT AC_____AMPERE SERVICE." (The correct service rating shall be stamped in the blank space.)

[Statutory Authority: RCW 43.22.340, [43.22.]355, [43.22.]360, [43.22.]432, [43.22.]440 and [43.22.]480. 96-21-146, § 296-150C-1270, filed 10/23/96, effective 11/25/96.]

WAC 296-150C-1280 Wiring methods—Wiring of expandable or multiple units. (1) Where circuits in expandable or multiple units are designed to be energized from one main panelboard, permanent-type wiring methods and materials must be used for connecting the units to each other.

(2) Commercial coaches may have individual branch circuit panelboards installed in each unit subject to the requirements of this chapter.

[Statutory Authority: RCW 43.22.340, [43.22.]355, [43.22.]360, [43.22.]432, [43.22.]440 and [43.22.]480. 96-21-146, § 296-150C-1280, filed 10/23/96, effective 11/25/96.]

WAC 296-150C-1290 Under-chassis wiring. Outdoor or under-chassis wiring (120/240 volts) exposed to moisture and mechanical damage must be protected by rigid metal conduit, electrical metallic tubing, liquid-tight flexible metal conduit, or nonmetallic conduit. The conductors shall be type RW, TW, or equivalent.

[Statutory Authority: RCW 43.22.340, [43.22.]355, [43.22.]360, [43.22.]432, [43.22.]440 and [43.22.]480. 96-21-146, § 296-150C-1290, filed 10/23/96, effective 11/25/96.]

WAC 296-150C-1300 Equipment mounting. Electrical equipment must be securely mounted to prevent displacement during transit. Meter bases must not be mounted on commercial coaches.

[Statutory Authority: RCW 43.22.340, [43.22.]355, [43.22.]360, [43.22.]432, [43.22.]440 and [43.22.]480. 96-21-146, § 296-150C-1300, filed 10/23/96, effective 11/25/96.]

WAC 296-150C-1303 How must storage batteries be installed in a commercial coach? Storage batteries subject to the provisions of this standard must be securely attached to the commercial coach. They must be installed in an area which is vapor-tight to the interior and ventilated directly to the exterior of the coach. When batteries are installed in a compartment, the compartment must be ventilated with openings of not less than two square inches at the top and two square inches at the bottom. Batteries must not be installed in a compartment containing spark or flame producing equipment, except in an engine generator compartment if the only charging source is the generator itself.

[Statutory Authority: Chapter 43.22 RCW. 98-14-078, § 296-150C-1303, filed 6/30/98, effective 7/31/98.]

WAC 296-150C-1310 Grounding—General. Grounding of both electrical and nonelectrical metal parts in a commercial coach must be through connection to a grounding bus in the commercial coach distribution panel. The grounding bus must be grounded through the green conductor in the supply cord. It may also be grounded through the feeder wiring to the service ground in the service-entrance equipment located adjacent to the commercial coach location. Do not connect either the frame of the commercial coach or the frame of any appliance to the neutral conductor in the commercial coach.

(1) The insulated neutral requirements are as follows:

(a) The grounded (neutral) circuit conductor must be insulated from the grounding conductors, from equipment enclosures, and from other grounded parts.

(b) The grounded (neutral) circuit terminals in the distribution panels and in ranges, clothes dryers, counter-mounted cooking units, and wall-mounted ovens must be insulated from the equipment enclosure.

(c) Bonding screws, straps, or buses in the distribution panel or in appliances *must be removed and discarded*.

(d) Connections of ranges and clothes dryers with 120/240 volt, 3-wire ratings must be made with 4-conductor cord and 3-pole, 4-wire grounding-type plugs or by type AC metalclad cable or individual conductors enclosed in flexible metal conduit.

(e) Type NM or type SE cable must not be used to connect a range or a dryer. This does not prohibit the use of type NM or type SE cable between the branch circuit overcurrent protective device and a junction box or range or dryer receptacle.

(f) For 120-volt rated devices, a 3-conductor cord and 2-pole, 3-wire grounding-type plug is permitted.

(2) The following equipment grounding means must be used:

(a) The green grounding wire in the supply cord or permanent feeder wiring must be connected to the grounding bus in the distribution panel or disconnecting means.

(b) In the electrical system, all exposed metal parts, enclosures, frames, lamp fixture canopies, etc., must be effectively bonded to the grounding terminal or enclosure of the distribution panel.

(c) Cord-connected appliances must be grounded by means of an approved cord with grounding conductor and grounding-type attachment plug.

(3) The following bonding requirements of noncurrent-carrying metal parts must apply:

(a) All exposed noncurrent-carrying metal parts that may become energized must be effectively bonded to the grounding terminal or enclosure of the distribution panelboard. A bonding conductor must be connected between each distribution panelboard and an accessible terminal on the chassis.

(b) Grounding terminals must be of the solderless type and approved as pressure-terminal connectors recognized for the wire size used.

(c) The bonding conductor must be solid or stranded, insulated or bare and must be No. 8 copper minimum or equal. It must be routed so as not to be exposed to physical damage.

(d) Metallic gas, water, and waste pipes and metallic air circulating ducts must be considered bonded if they are connected to the terminal on the chassis by clamps, solderless connectors or by suitable grounding-type straps.

(e) Any metallic roof and exterior covering must be considered bonded if:

(i) The metal panels overlap one another and are securely attached to the wood or metal frame parts by metallic fasteners;

(ii) The lower panel of the metallic exterior covering is secured at a cross member of the chassis by two metal fastener straps per commercial coach unit or section at opposite ends; and

(iii) The bonding strap must be a minimum of 30 gauge galvanized metal and must be a minimum of four inches wide.

[Statutory Authority: RCW 43.22.340, [43.22.]355, [43.22.]360, [43.22.]432, [43.22.]440 and [43.22.]480. 96-21-146, § 296-150C-1310, filed 10/23/96, effective 11/25/96.]

WAC 296-150C-1320 Dielectric strength test. (1)(a) The wiring of each commercial coach must be subjected to a one-minute, 900-volt, dielectric strength test between live parts (including neutral) and the commercial coach ground. All switches must be closed during the test. (Closed switches are in the on position.)

(b) The test may also be performed at 1,080 volts for one second. This test must be performed after branch circuits are complete and after fixtures or appliances are installed.

Exception: Fixtures and appliances are not required to withstand the dielectric strength test.

(2) Each commercial coach designed with a 480-volt electrical system must be subjected to a one-minute 1,275-volt dielectric strength test between current-carrying conductors and the coach ground. The test may also be performed at 1,500 volts for one second.

(3) Low-voltage circuit conductors in each commercial coach must withstand the applied potential without electrical breakdown of a one-minute, 500-volt, or a one-second, 600-volt, dielectric strength test. The potential must be applied between live and grounded conductors.

(4) The test is to be performed by the manufacturer and witnessed by the inspector.

[Statutory Authority: RCW 43.22.340, [43.22.]355, [43.22.]360, [43.22.]432, [43.22.]440 and [43.22.]480. 96-21-146, § 296-150C-1320, filed 10/23/96, effective 11/25/96.]

MECHANICAL

WAC 296-150C-1330 Mechanical—General. This chapter applies to the installation of mechanical, ventilation, and indoor air quality equipment in any commercial coach bearing or required to bear a department insignia. Mechanical, ventilation, and indoor air quality equipment and installations in or on a commercial coach shall be installed according to the requirements of the Uniform Mechanical Code, the Washington State Ventilation and Indoor Air Quality Code, the rules of this chapter, and the conditions of the equipment approval or listing agency.

[Statutory Authority: RCW 43.22.340, [43.22.]355, [43.22.]360, [43.22.]432, [43.22.]440 and [43.22.]480. 96-21-146, § 296-150C-1330, filed 10/23/96, effective 11/25/96.]

WAC 296-150C-1340 Mechanical definitions. Definitions contained in the current adopted edition of the Uniform Mechanical Code, and the following definitions apply to the commercial coaches.

"Accessible" is having access to a fixture, connection, appliance, or equipment that requires the removal of an access panel, door, or similar obstruction.

"Appliance compartment" is a room having a floor area not in excess of twice the largest plan area of the room's appliance or appliances plus clearances required in this chapter.

"Automatic pilot device" is a device employed with gas-burning equipment that will either automatically shut off the gas supply to the burner being served or automatically activate, electrically or otherwise, a gas shutoff device when the pilot flame is extinguished.

"Btuh" is British thermal units per hour.

"Clearance" is the distance between the appliance, chimney, vent, or chimney or vent connector, or plenum and the nearest surface.

"Combustible material" is a material adjacent to or in contact with a heat-producing appliance, vent connector, chimney, or steam and hot water pipes, made of or surfaced with wood, compressed paper, plant fibers, or other products that will ignite and burn. Such material must be considered combustible even though flame-proofed, fire-retardant treated, or plastered.

"Connector-gas appliance" is a flexible or semi-rigid connector listed as conforming to ANSI Standard Z21.24, Metal Connectors for Gas Appliances, used to convey fuel gas, three feet or less in length (six feet or less for gas ranges), between a gas outlet and a gas appliance in the same room.

"Fuel gas piping system" is the arrangement of piping, tubing, fittings, connectors, valves, and devices designed and intended to supply or control the flow of fuel gas to an appliance.

"Gas" is fuel gas, such as natural gas, manufactured gas, undiluted liquefied petroleum gas (vapor phase only), liquefied petroleum air-gas mixtures, or mixtures of these gases that would ignite in the presence of oxygen.

"Gas-supply connection" is the terminal end or connection to which a gas-supply connector is attached.

"Input rating" is the maximum fuel-burning capacity of any warm-air furnace, recessed heater, or burner expressed in British thermal units per hour.

"Liquefied petroleum gases (LPG)" is any material that is composed predominantly of propane, propylene, butanes (normal butane or isobutane), and butylenes, or any mixture of them.

"Quick-disconnect device" is a hand-operated means of connecting and disconnecting a gas supply or connecting gas systems and is equipped with an automatic device to shut off the gas supply when disconnected.

"Readily accessible" is having direct access without the necessity of removing any panel, door, or similar obstruction.

[Statutory Authority: RCW 43.22.340, [43.22.]355, [43.22.]360, [43.22.]432, [43.22.]440 and [43.22.]480. 96-21-146, § 296-150C-1340, filed 10/23/96, effective 11/25/96.]

WAC 296-150C-1346 When HVAC equipment is supplied with more than one CFM rating, which rating do I use? Where HVAC equipment manufacturers show multiple cubic feet per minute (CFM) ratings and/or multiple water gauge ratings, you must use the highest rated capacity.

[Statutory Authority: RCW 43.22.340, 43.22.350, 43.22.355, 43.22.360, 43.22.400, 43.22.432, 43.22.433, 43.22.434, 43.22.450, 43.22.480, and 43.22.485. 00-17-148, § 296-150C-1346, filed 8/22/00, effective 9/30/00.]

WAC 296-150C-1350 LPG system enclosure and mounting. (1) LPG containers must not be installed, nor stored temporarily, inside any commercial coach.

Exception: This prohibition does not apply to completely self-contained hand torches, lanterns, or similar equipment with containers having a maximum water capacity of two and one-half pounds (approximately one pound LPG capacity).

(2)(a) Containers, control valves and regulating equipment, when installed, must be mounted on the "A" frame of the commercial coach or installed in a compartment that is *vapor-tight* to the inside of the commercial coach and accessible only from the outside.

(b) The compartment must be ventilated at top and bottom to diffuse vapors. The compartment must be ventilated with two vents having an aggregate area of not less than two percent of the floor area of the compartment and must open without restriction to the outside. The required vents must be equally distributed between the floor and ceiling of the compartment. If the lower vent is located in the access door or wall, the bottom edge of the vent shall be flush with the floor level of the compartment. The top vent must be located in the access door or wall with the bottom of the vent not more than twelve inches below the ceiling level of the compartment. All vents must have an unrestricted discharge to the outside atmosphere. Access doors or panels of compartments must not be equipped with locks or require special tools or knowledge to open.

(3) Doors, hoods, domes, or portions of housings and enclosures required to be removed or opened for container replacement must incorporate means for clamping them firmly in place and preventing them from working loose during transit. Provisions must be incorporated in the assembly to hold the containers firmly in position and prevent their movement during transit.

(4) LPG containers must be mounted on a substantial support or a base secured firmly to the commercial coach chassis. Neither the container nor its support can extend below the commercial coach frame.

[Statutory Authority: RCW 43.22.340, [43.22.]355, [43.22.]360, [43.22.]432, [43.22.]440 and [43.22.]480. 96-21-146, § 296-150C-1350, filed 10/23/96, effective 11/25/96.]

WAC 296-150C-1360 Gas piping—Piping design. Commercial coaches requiring fuel gas for any purpose must be equipped with a gas piping system that is designed for LPG only or combination LPG and natural gas.

[Statutory Authority: RCW 43.22.340, [43.22.]355, [43.22.]360, [43.22.]432, [43.22.]440 and [43.22.]480. 96-21-146, § 296-150C-1360, filed 10/23/96, effective 11/25/96.]

WAC 296-150C-1370 Gas piping—Expandable or multiple commercial coaches. Where gas piping is to be installed in more than one portion of an expandable or multiple commercial coach, the design and construction must be as follows:

(1) There must be only one point of cross over, readily accessible from the exterior of the commercial coach.

(2) The connector between units must be a listed flexible gas connector approved for exterior use.

(3) A shut-off valve must be located on the supply side of the connection. Both a flexible gas connector that is approved for exterior use and a quick disconnect type of connector must be tested and approved to IAPMO TSC-9 standard or equal; and both must have a shut-off valve installed that is tested and approved to ANSI Z21.15 standard or equal.

(4) Protective caps or plugs must be permanently attached to the coach and used to seal the system when not in use.

[Statutory Authority: RCW 43.22.340, [43.22.]355, [43.22.]360, [43.22.]432, [43.22.]440 and [43.22.]480. 96-21-146, § 296-150C-1370, filed 10/23/96, effective 11/25/96.]

WAC 296-150C-1380 Concealed tubing. (1) Tubing must not be run inside walls, floors, partitions, or roofs.

(2) If tubing passes through walls, floors, partitions, roofs, or similar installations, the tubing must be protected by the use of weather resistant grommets that snugly fit both the tubing and the hole through which the tubing passes.

[Statutory Authority: RCW 43.22.340, [43.22.]355, [43.22.]360, [43.22.]432, [43.22.]440 and [43.22.]480. 96-21-146, § 296-150C-1380, filed 10/23/96, effective 11/25/96.]

WAC 296-150C-1390 Gas piping—Pipe-joint compound. (1) Screw joints must be made tight with pipe-joint compound that is insoluble in liquefied petroleum gas.

(2) Pipe-joint compound must be approved for the type of gas used. The pipe-joint compound must be applied to the male threads only.

[Statutory Authority: RCW 43.22.340, [43.22.]355, [43.22.]360, [43.22.]432, [43.22.]440 and [43.22.]480. 96-21-146, § 296-150C-1390, filed 10/23/96, effective 11/25/96.]

WAC 296-150C-1400 Gas piping—Hangers and supports. (1) All gas piping must be adequately supported by galvanized or equivalently protected metal straps or hangers at intervals of not more than four feet, except where adequate support and protection is provided by structural members.

(2) Gas pipe supply connections must be rigidly anchored to a structural member within six inches of the supply connections.

[Statutory Authority: RCW 43.22.340, [43.22.]355, [43.22.]360, [43.22.]432, [43.22.]440 and [43.22.]480. 96-21-146, § 296-150C-1400, filed 10/23/96, effective 11/25/96.]

WAC 296-150C-1410 Gas piping—Electrical ground. (1) Gas piping must not be used for an electrical ground.

(2) The gas line must be bonded.

[Statutory Authority: RCW 43.22.340, [43.22.]355, [43.22.]360, [43.22.]432, [43.22.]440 and [43.22.]480. 96-21-146, § 296-150C-1410, filed 10/23/96, effective 11/25/96.]

WAC 296-150C-1420 Identification of gas supply connections. A label must be permanently attached on the outside of the exterior wall of the commercial coach adjacent to the gas supply connection which provides the following information:

(1) The type of system (i.e., liquid petroleum system or natural gas system or combination liquid petroleum and natural gas system);

(2) The appropriate Btuh input rating; and

(3) If excess ("or more") Btuh input is allowed.

For example: *Natural Gas System*
250,000 Btuh
Or More

[Statutory Authority: RCW 43.22.340, [43.22.]355, [43.22.]360, [43.22.]432, [43.22.]440 and [43.22.]480. 96-21-146, § 296-150C-1420, filed 10/23/96, effective 11/25/96.]

WAC 296-150C-1430 Gas piping system openings. All openings in the gas piping system must be closed gas-tight with threaded pipe plugs or pipe caps.

[Statutory Authority: RCW 43.22.340, [43.22.]355, [43.22.]360, [43.22.]432, [43.22.]440 and [43.22.]480. 96-21-146, § 296-150C-1430, filed 10/23/96, effective 11/25/96.]

WAC 296-150C-1440 Gas piping—Valves. (1) In addition to any valve on the appliance, a shut-off valve must be installed in the fuel piping outside of each gas appliance but inside the commercial coach structure and upstream of the union or connector. The shut-off valve must be located within six feet of a cooking appliance and within three feet of any other appliance. A shut-off valve may serve more than one appliance if located as required above.

(2) Shut-off valves used in connection with gas piping must be of a type designed for use with liquefied petroleum gas. Shut-off valves must be tested and approved to ANSI Z21.15 standard or equal.

[Statutory Authority: RCW 43.22.340, [43.22.]355, [43.22.]360, [43.22.]432, [43.22.]440 and [43.22.]480. 96-21-146, § 296-150C-1440, filed 10/23/96, effective 11/25/96.]

WAC 296-150C-1450 Gas piping—Testing for leakage before appliances are connected. (1) The piping system must stand a pressure of at least ten psi gauge for a period of not less than fifteen minutes without showing any drop in pressure.

(2) Pressure must be measured with a gauge calibrated to be read in increments of not greater than one-tenth pound.

(3) The source of pressure must be isolated before the pressure tests are made. Before a test is begun, the temperature of the ambient air and of the piping must be approximately the same, and constant air temperature must be maintained throughout the test.

[Statutory Authority: RCW 43.22.340, [43.22.]355, [43.22.]360, [43.22.]432, [43.22.]440 and [43.22.]480. 96-21-146, § 296-150C-1450, filed 10/23/96, effective 11/25/96.]

WAC 296-150C-1460 Gas piping—Testing for leakage after appliances are connected. (1) After gas appliances have been connected, the gas-piping system must be subjected to a pressure test with the burner valves closed. The test consists of air at not less than ten inches nor more than fourteen inches pressure of water column (six to eight ounces). The system must hold this pressure for a period of not less than ten minutes with no leakage. Before beginning the test, the temperature of the gas-piping system and the test air must be equalized, and this shall be maintained throughout the test.

(2) Appliance shut-off valves ahead of gas cooking appliances may be closed for the performance of this test. When the test is satisfactorily performed, these valves must be opened and, while the system is under pressure, the appliance connectors must be tested with an approved leak detector or approved bubble solution.

[Statutory Authority: RCW 43.22.340, [43.22.]355, [43.22.]360, [43.22.]432, [43.22.]440 and [43.22.]480. 96-21-146, § 296-150C-1460, filed 10/23/96, effective 11/25/96.]

VENTILATION AND INDOOR AIR QUALITY

WAC 296-150C-1470 Ventilation and indoor air quality—General. Ventilation and indoor air quality equipment and installations in or on a commercial coach must be

made according to the requirements of the Washington State Ventilation and Indoor Air Quality Code, the Uniform Mechanical Code, the rules of this chapter, and the conditions of the equipment approval.

[Statutory Authority: RCW 43.22.340, [43.22.]355, [43.22.]360, [43.22.]432, [43.22.]440 and [43.22.]480. 96-21-146, § 296-150C-1470, filed 10/23/96, effective 11/25/96.]

WAC 296-150C-1480 Ventilation and indoor air quality definitions. Definitions contained in the current adopted edition of the Washington State Ventilation and Indoor Air Quality Code and the Uniform Mechanical Code and the following definitions apply to the commercial coach ventilation and indoor air quality rules in this chapter.

"Duct" is a conduit or passageway for conveying air to or from heating, cooling, air conditioning, or ventilation equipment, not including the plenum.

"Plenum" is an air compartment that is part of an air-distributing system to which one or more ducts are connected.

- **A furnace-supply plenum** is a plenum attached directly to, or an integral part of, the air-supply outlet of the furnace.
- **A furnace-return plenum** is a plenum attached directly to, or an integral part of, the return inlet of the furnace.

"Vent connector" is a pipe for conveying products of combustion from a fuel-burning appliance to a vent.

"Water heater" is an appliance for heating water for domestic purposes other than for space heating.

[Statutory Authority: RCW 43.22.340, [43.22.]355, [43.22.]360, [43.22.]432, [43.22.]440 and [43.22.]480. 96-21-146, § 296-150C-1480, filed 10/23/96, effective 11/25/96.]

WAC 296-150C-1490 Appliances—Installation. In addition to requirements of the Washington State Ventilation and Indoor Air Quality Code:

(1) The installation of each appliance must conform to the manufacturer's installation instructions. The manufacturer's instructions must be attached to the appliance.

(2) Combustion air inlets and flue gas outlets must be listed as components of the appliance and must be completely separated. The required separation may be obtained by:

(a) The installation of direct vent system (sealed combustion system) appliances; or

(b) The installation of appliances within enclosures so that the appliance combustion system and venting system are separate from the interior atmosphere of the commercial coach. There must not be any door, removable access panel, or other opening into the enclosure from inside the commercial coach. Any openings for ducts, piping, wiring, etc., must be sealed.

[Statutory Authority: RCW 43.22.340, [43.22.]355, [43.22.]360, [43.22.]432, [43.22.]440 and [43.22.]480. 96-21-146, § 296-150C-1490, filed 10/23/96, effective 11/25/96.]

WAC 296-150C-1500 Safety devices—Water heater relief valves. In addition to requirements of the Washington State Ventilation and Indoor Air Quality Code:

(1) All water heaters must be installed with approved fully automatic valve or valves designed to provide temperature and pressure relief. Temperature and pressure relief valves must be tested and approved to ANSI Z21.22 standard or equal.

(2) Any temperature relief valve or combined pressure and temperature relief valve installed for this purpose must have the temperature sensing element immersed in the hottest water within the upper six inches of the tank. It must be set to start relieving at a pressure of 150 psi or the rated working pressure of the tank, whichever is lower, and at or below a water temperature of 210 degrees Fahrenheit.

(3) Relief valves must be provided with full-sized drains. Drains must be directed to the exterior sides of the unit, exiting at least six inches above the ground, and each drain pipe must exhaust with a ninety degree downward turn. Drain lines must be of a material approved for hot water distribution and must drain fully by gravity, must not be trapped, and must not have their outlets threaded.

[Statutory Authority: RCW 43.22.340, [43.22.]355, [43.22.]360, [43.22.]432, [43.22.]440 and [43.22.]480. 96-21-146, § 296-150C-1500, filed 10/23/96, effective 11/25/96.]

WAC 296-150C-1510 Air ducts—Expandable or multiple commercial coach connections. In addition to the requirements of the International Mechanical Code and the Washington State Energy Code air ducts for:

(1) An expandable or multiple commercial coach may have ducts of the heating system installed in the various units. The points of connection must be so designed and constructed that when the commercial coach is fully expanded or coupled, the resulting duct joint will conform to the requirements of this chapter.

(2) Installation instructions for supporting the crossover duct from the commercial coach must be provided for on-site installation. The duct must not touch the ground.

[Statutory Authority: Chapter 43.22 RCW and 2003 c 291. 05-01-102, § 296-150C-1510, filed 12/14/04, effective 2/1/05. Statutory Authority: RCW 43.22.340, [43.22.]355, [43.22.]360, [43.22.]432, [43.22.]440 and [43.22.]480. 96-21-146, § 296-150C-1510, filed 10/23/96, effective 11/25/96.]

WAC 296-150C-1520 Air ducts—Duct and plenum insulation. Every heating and cooling duct and plenum must be installed according to the International Mechanical Code and the Washington State Energy Code.

[Statutory Authority: Chapter 43.22 RCW and 2003 c 291. 05-01-102, § 296-150C-1520, filed 12/14/04, effective 2/1/05. Statutory Authority: RCW 43.22.340, [43.22.]355, [43.22.]360, [43.22.]432, [43.22.]440 and [43.22.]480. 96-21-146, § 296-150C-1520, filed 10/23/96, effective 11/25/96.]

PLUMBING

WAC 296-150C-1530 Plumbing—General. This chapter also applies to the installation of plumbing equipment in any commercial coach bearing or required to bear a department insignia. Plumbing fixtures, equipment, and installations in commercial coaches must conform to the provisions of the Uniform Plumbing Code and the amendments adopted by the State Building Code Council, except part 1, unless specifically exempted or required by this section.

[Statutory Authority: RCW 43.22.340, [43.22.]355, [43.22.]360, [43.22.]432, [43.22.]440 and [43.22.]480. 96-21-146, § 296-150C-1530, filed 10/23/96, effective 11/25/96.]

WAC 296-150C-1540 Plumbing—Definitions. The definitions listed below, in addition to the Uniform Plumbing Code definitions apply to this chapter.

"Drain outlet" is the discharge end of the commercial coach main drain to which a drain connector may be attached.

"Main drain" is the principal artery of the commercial coach drainage system to which drainage branches may be connected.

"Water-supply connection" is the fitting or point of connection of the commercial coach water distribution system designed for connection to a water connector.

[Statutory Authority: RCW 43.22.340, [43.22.]355, [43.22.]360, [43.22.]432, [43.22.]440 and [43.22.]480. 96-21-146, § 296-150C-1540, filed 10/23/96, effective 11/25/96.]

WAC 296-150C-1545 Does the department require a water system expansion tank be installed? The department will only require that a tee be installed in an accessible location for the future addition of an expansion tank where one may be installed if required.

[Statutory Authority: RCW 43.22.340 and 43.22.480. 99-13-010, § 296-150C-1545, filed 6/4/99, effective 7/5/99.]

WAC 296-150C-1550 Drainage—Cap or plug. Drain outlets must be equipped with a watertight cap or plug that is permanently attached to the vehicle.

[Statutory Authority: RCW 43.22.340, [43.22.]355, [43.22.]360, [43.22.]432, [43.22.]440 and [43.22.]480. 96-21-146, § 296-150C-1550, filed 10/23/96, effective 11/25/96.]

WAC 296-150C-1560 Drainage—Clearance from drain outlet. The drain outlet and couplers must have a minimum clearance of three inches in any direction from all parts of the structure or appurtenances and at least eighteen inches unrestricted clearance directly in front of the drain outlet.

[Statutory Authority: RCW 43.22.340, [43.22.]355, [43.22.]360, [43.22.]432, [43.22.]440 and [43.22.]480. 96-21-146, § 296-150C-1560, filed 10/23/96, effective 11/25/96.]

WAC 296-150C-1570 Water supply connection. (1) Each commercial coach equipped with a water distribution system must have a water-supply connection that terminates within eighteen inches of the outside wall of the commercial coach.

(2) Water-supply connections must be equipped with a watertight cap or plug that is permanently attached to the commercial coach.

[Statutory Authority: RCW 43.22.340, [43.22.]355, [43.22.]360, [43.22.]432, [43.22.]440 and [43.22.]480. 96-21-146, § 296-150C-1570, filed 10/23/96, effective 11/25/96.]

COMMERCIAL COACH FEES

WAC 296-150C-3000 Commercial coach fees.

INITIAL FILING FEE	$31.40
DESIGN PLAN FEES:	
INITIAL FEE - MASTER DESIGN	$216.30
INITIAL FEE - ONE YEAR DESIGN	$88.60
RENEWAL FEE	$37.50
RESUBMIT FEE	$63.20
ADDENDUM (Approval expires on same date as original plan)	$63.20
ELECTRONIC PLAN SUBMITTAL FEE $4.80 per page for the first set of plans and $0.30 per page for each additional set of plans. These fees are in addition to any applicable design plan fees required under this section.	
ELECTRICAL PLAN REVIEW (When required by chapter 296-46B WAC. Plan review	
for educational, institutional or health care facilities and other buildings)	
Electrical Plan submission fee	$63.20
Service/feeder Ampacity:	
0 - 100	$28.00
101 - 200	$34.90
201 - 400	$65.50
401 - 600	$77.20
601 - 800	$99.50
801 - 1000	$121.80
Over 1000	$132.10
Over 600 volts surcharge	$20.90
Thermostats:	
First	$12.40
Each additional	$3.00
Low voltage fire alarm and burglar alarm:	
Each control panel and up to four circuits or zones	$11.30
Each additional circuit or zone	$2.00
Generators, refer to appropriate service/feeder ampacity fees	
Note: Altered services or feeders shall be charged the above rate per the service/feeder ampacity fees.	

Supplemental submissions of plans (resubmittals, addendums, renewals,	
code updates, etc.) shall be charged per hour or fraction of an hour*	$74.90
ELECTRICAL COMMERCIAL/INDUSTRIAL	
Electrical Service/feeders Ampacity	201 plus
Service/feeder	$184.30
Additional Feeder	$35.00
ELECTRICAL MULTIFAMILY RESIDENTIAL	
Electrical Service/feeders	201 plus
Service/feeder	$97.80
Additional Feeder	$25.00
MEDICAL GAS PLAN REVIEW:	
SUBMISSION FEE	$60.60
FIRST STATION	$60.60
EACH ADDITIONAL STATION	$22.20
RECIPROCAL PLAN REVIEW:	
INITIAL FEE - MASTER DESIGN	$96.40
INITIAL FEE - ONE YEAR DESIGN	$58.40
RENEWAL FEE	$58.40
ADDENDUM	$58.40
PLANS APPROVED BY PROFESSIONALS	$44.00
APPROVAL OF EACH SET OF DESIGN PLANS BEYOND FIRST TWO SETS	$11.90
DEPARTMENT INSPECTION FEES	
INSPECTION/REINSPECTION (Per hour* plus travel time* and mileage**)	$63.20
TRAVEL (Per hour)	$63.20
PER DIEM**	
HOTEL***	
MILEAGE**	
RENTAL CAR***	
PARKING***	
AIRFARE***	
DEPARTMENT AUDIT FEES:	
AUDIT (Per hour*)	$63.20
TRAVEL (Per hour*)	$63.20
PER DIEM**	
HOTEL***	
MILEAGE**	
RENTAL CAR***	
PARKING***	
AIRFARE***	
ALTERATION INSPECTION (One hour plus insignia alteration fee)	$94.60
INSIGNIA FEES:	
FIRST SECTION	$19.20
EACH ADDITIONAL SECTION	$11.90
ALTERATION	$31.40
REISSUED-LOST/DAMAGED	$11.90
OTHER FEES:	
FIELD TECHNICAL SERVICE (Per hour* plus travel time* and mileage**)	$63.20
PUBLICATION PRINTING AND DISTRIBUTION OF RCW'S AND WAC'S (One free copy per year upon request)	$11.90
* Minimum charge of 1 hour; time spent greater than 1 hour is charged in 1/2 hour increments	
** Per state guidelines	
*** Actual charges incurred	

[Statutory Authority: Chapter 43.22 RCW and 2003 c 291. 05-01-102, § 296-150C-3000, filed 12/14/04, effective 2/1/05. Statutory Authority: Chapters 18.27 and 43.22 RCW. 04-12-048, § 296-150C-3000, filed 5/28/04, effective 6/30/04. Statutory Authority: RCW 43.22.350, 43.22.434, 43.22.480, 43.22.500, 70.87.030, 18.106.070, 18.106.125, 2001 c 7, and chapters 18.106, 43.22, and 70.87 RCW. 03-12-045, § 296-150C-3000, filed 5/30/03, effective 6/30/03. Statutory Authority: RCW 43.22.350, 43.22.434, 43.22.480, 43.22.500, 18.27.040, 18.27.070, 18.27.075, 70.87.030, 19.28.041, 19.28.051, 19.28.101, 19.28.121, 19.28.161, 19.28.201, 19.28.211, 19.28.341, 2001 c 7, 2002 c 249, and chapters 19.28, 43.22, 18.27, and 70.87 RCW. 02-12-022, § 296-150C-3000, filed 5/28/02, effective 6/28/02. Statutory Authority: RCW 43.22.350, 43.22.434, 43.22.480, 43.22.500, 18.27.070, 18.27.075, 70.87.030, 19.28.041, 19.28.051, 19.28.101, 19.28.121, 19.28.161, 19.28.201, 19.28.211, 19.28.341, 2001 c 159, and chapters 43.22, 19.28, 18.27, and 70.87 RCW. 01-12-035, § 296-150C-3000, filed 5/29/01, effective 6/29/01. Statutory Authority: Chapters 43.22, 18.27, 70.87 and 19.28 RCW. 99-12-080, § 296-150C-3000, filed 5/28/99, effective 6/28/99. Statutory Authority: Chapters 18.106, 18.27 and 43.22 RCW. 98-12-041, § 296-150C-3000, filed 5/29/98, effective 6/30/98. Statutory Authority: RCW 70.87.030, 18.27.070, [18.27.]075, 43.22.350, [43.22.]355, [43.22.]434 and [43.22.]480(2). 97-11-053, § 296-150C-3000, filed 5/20/97, effective 6/30/97. Statutory Authority: RCW 43.22.340, [43.22.]355, [43.22.]360, [43.22.]432, [43.22.]440 and [43.22.]480. 96-21-146, § 296-150C-3000, filed 10/23/96, effective 11/25/96.]

Chapter 296-150F WAC

FACTORY-BUILT HOUSING AND COMMERCIAL STRUCTURES

WAC

296-150F-0010 Authority, purpose, and scope.
296-150F-0020 What definitions apply to this chapter?
296-150F-0030 How is this chapter enforced?
296-150F-0040 Will you keep my manufacturing information confidential?
296-150F-0050 Can you prohibit the installation of factory-built housing and commercial structures?
296-150F-0070 Do you have reciprocal agreements with other states to inspect factory-built housing and commercial structures, and components?
296-150F-0080 Do you allow a local enforcement agency to inspect factory-built housing, commercial structures, and components at the manufacturing location?
296-150F-0100 What happens if I disagree with your decision regarding my compliance with this chapter?
296-150F-0110 Do you have an advisory board to address factory-built housing and commercial structure issues?
296-150F-0120 Where can I obtain technical assistance regarding factory-built housing and commercial structures?
296-150F-0130 How do I register a complaint?
296-150F-0140 Do you allow the use of alternate materials, alternate design and method of construction?

INSIGNIA

296-150F-0200 Who must purchase factory-built housing and commercial structure insignia?
296-150F-0210 What are the insignia requirements?
296-150F-0220 How do I obtain insignia information and the required forms?
296-150F-0230 What are the insignia application requirements?
296-150F-0250 How do I replace lost or damaged insignia?

DESIGN PLAN

296-150F-0300 When is design plan approval required?
296-150F-0310 Who can approve design plans?

DESIGN-PLAN APPROVAL BY THE DEPARTMENT

296-150F-0320 What must I provide with my request for design-plan approval by the department?
296-150F-0340 What must an engineering analysis for design plans include?
296-150F-0350 What must the test procedures and results for design plans include?
296-150F-0380 What happens if you approve my design plan?
296-150F-0390 If my design plan is not approved, how much time do I have to submit a corrected design plan?
296-150F-0400 What happens after my design plan is approved?
296-150F-0410 When does my design plan expire?
296-150F-0415 Who approves addendums to design plans approved by the department?

DESIGN-PLAN APPROVAL BY A LICENSED PROFESSIONAL OR FIRM

296-150F-0420 Who can be authorized to approve design plans?
296-150F-0430 What information must a professional or firm provide to be authorized to approve design plans?
296-150F-0440 How will I know whether I am authorized to approve design plans?
296-150F-0450 How long is a licensed professional or firms authorization effective?
296-150F-0460 What information must a manufacturer provide when a professional or firm does the design plan approval?
296-150F-0470 What happens after we receive the professional or firm approved design plan and information?
296-150F-0480 Do you have a list of professionals or firms that are authorized to submit design plans?
296-150F-0490 Who approves addendums to design plans approved by a professional or firm?

INSPECTIONS PRIOR TO ISSUANCE OF AN INSIGNIA

296-150F-0500 When is an inspection required?
296-150F-0510 How do I request an inspection?
296-150F-0520 What happens if my factory-built house or commercial structure passes inspection?
296-150F-0530 Am I charged if I request an inspection but I am not prepared?
296-150F-0540 Who inspects factory-built housing and commercial structures for installation at the building site?
296-150F-0550 Do you notify the local enforcement agency after your final inspection of factory-built structures at a manufacturing location?

USED FACTORY-BUILT STRUCTURES WITHOUT AN INSIGNIA

296-150F-0580 Must I obtain an insignia for used factory-built structures?
296-150F-0590 How do I obtain insignia for used factory-built structures?

CODES FOR FACTORY-BUILT HOUSING, COMMERCIAL STRUCTURES, AND COMPONENTS

296-150F-0600 What manufacturing codes apply to factory-built housing and commercial structures?
296-150F-0605 May the required toilet facilities be located in an adjacent building?
296-150F-0610 Do you require the exit doors to be one-half the diagonal distance apart if each area served has its own exit door?
296-150F-0620 Does the department require a water system expansion tank be installed?
296-150F-0625 Are there any special requirements for portable school classrooms?
296-150F-0630 When HVAC equipment is supplied with more than one CFM rating, which rating do I use?

MANUFACTURER'S NOTICE TO THE DEPARTMENT

296-150F-0700 Must manufacturers of factory-built housing and commercial structures notify you if they manufacture at more than one location?
296-150F-0710 Must manufacturers of factory-built housing and commercial structures notify you of a change in business name or address?
296-150F-0720 Must manufacturers of factory-built housing and commercial structures notify you of a change in business ownership?

FACTORY-BUILT HOUSING AND COMMERCIAL STRUCTURE FEES

296-150F-3000 Factory-built housing and commercial structure fees.

DISPOSITION OF SECTIONS FORMERLY CODIFIED IN THIS CHAPTER

296-150F-0615 May the electrical disconnect required for mechanical equipment be inside of or mounted on the equipment? [Statutory Authority: RCW 43.22.340 and 43.22.480. 99-13-010, § 296-150F-0615, filed 6/4/99, effective 7/5/99.] Repealed by 05-01-102, filed 12/14/04, effective 2/1/05. Statutory Authority: Chapter 43.22 RCW and 2003 c 291.

WAC 296-150F-0010 Authority, purpose, and scope. (1) This chapter is authorized by RCW 43.22.420, 43.22.434 and 43.22.450 through 43.22.490, covering the construction and approval of factory-built housing and commercial structures before occupancy.

(2) This chapter applies to the approval:

(a) Of factory-built structures used for residences or commercial purposes; and

(b) After occupancy of a factory-built house or commercial structure, all inspections are done by the local enforcement agency.

[Statutory Authority: RCW 43.22.340, [43.22.]355, [43.22.]360, [43.22.]432, [43.22.]440 and [43.22.]480. 96-21-146, § 296-150F-0010, filed 10/23/96, effective 11/25/96.]

WAC 296-150F-0020 What definitions apply to this chapter? "Approved" is approved by the department of labor and industries.

"Building site" is a tract, parcel, or subdivision of land on which a factory-built house or commercial structure will be installed.

"Closed construction" is a factory-built house, commercial structure, or component that is not open for visible inspection at the building site. It may enclose factory-installed structural, mechanical, electrical, plumbing, or other systems and equipment.

"Commercial structure" is a structure designed or used for human habitation (such as a dormitory) or human occupancy for industrial, educational, assembly, professional, or commercial purposes. It may also include a component.

"Component" is a discrete element that cannot be inspected at the time of installation either in the factory or in a site-built unit, but is:

• Designed to be installed in a structure;

• Manufactured as a unit; and

• Designed for a particular function or group of functions.

A component may be a floor, wall panel, roof panel, plumbing wall, electrical service wall, or heating assembly.

It may also be a service core. A service core is a factory assembled, three-dimensional section of a building. It may include mechanical, electrical, plumbing, and related systems. It may be a complete kitchen, bathroom, or utility room. Service cores are referred to as "wet boxes," "mechanical cores," or "utility cores."

Note: A roof truss is not considered a component.

"Damaged in transit" is damage that effects the integrity of the structural design or damage to any other system referenced in the codes required by the State Building Code, or other applicable codes.

"Department" is the department of labor and industries. The department may also be referred to as "we" or "us" in this chapter. Note: You may contact us at: Department of Labor and Industries, Specialty Compliance, PO Box 44440, Olympia, WA 98504-4440.

"Design plan" is a plan for the construction of factory-built housing, commercial structures, or components that includes floor plans, elevation drawings, specifications, engineering data, or test results necessary for a complete evaluation of the design.

"Design option" is a design that a manufacturer may use as an option to its design plan.

"Equipment" is all material, appliances, devices, fixtures, fittings, or accessories used in the manufacture, assembly, installation, or alteration of factory-built housing, commercial structures, and components.

"Factory assembled structure (FAS) advisory board" is a board authorized to advise the director of the department regarding the issues and adoption of rules relating to factory-built housing, commercial structures and components. (See RCW 43.22.420.)

"Factory-built housing" is housing designed for human occupancy such as a single-family dwelling. The structure of any room is entirely or substantially prefabricated or assembled at a place other than a building site. It may also include a component. A factory-built house is also referred to as a "modular" structure. Factory-built housing does not include manufactured (mobile) housing. (See RCW 43.22.450(3).)

"Insignia" is a label that we attach to a structure to verify that a factory-built house or commercial structure meets the requirements of this chapter. It could also be a stamp or label attached to a component to verify that it meets the requirements of this chapter.

"Install" is to erect or set in place a structure at a building site. It may also be the construction or assembly of a component as part of a factory-built house or commercial structure.

"Listed" is a piece of equipment, a component, or an installation that appears in a list published by a testing or listing agency and is suitable for use in a specified manner.

"Listing agency" is an organization whose business is approving equipment, components, or installations for publication.

"Local enforcement agency" is an agency of city or county government with power to enforce local regulations governing the installation of factory-built housing and commercial structures.

"Master design plan" is a design plan that expires when a new State Building Code has been adopted.

"Manufacturing" is making, fabricating, forming, or assembling a factory-built house, commercial structure, or component.

"One-year design plan" is a design plan that expires one year after approval or when a new State Building Code has been adopted.

"Repair" is the replacement, addition, modification, or removal of any construction, equipment, system, or installation to correct damage in transit or during on-site installation before occupancy.

"Unit" is a factory-built house, commercial structure, or component.

[Statutory Authority: Chapter 43.22 RCW. 98-14-078, § 296-150F-0020, filed 6/30/98, effective 7/31/98. Statutory Authority: RCW 43.22.340, [43.22.]355, [43.22.]360, [43.22.]432, [43.22.]440 and [43.22.]480. 96-21-146, § 296-150F-0020, filed 10/23/96, effective 11/25/96.]

WAC 296-150F-0030 How is this chapter enforced? (1) To enforce this chapter, we or another governmental inspection agency will inspect each factory-built house and commercial structure that is sited in Washington. Inspections will be conducted during normal work hours or at other reasonable times. (See WAC 296-150F-0070.)

(2) We will inspect each unit as required by the codes. (See WAC 296-150F-0500.)

[Statutory Authority: RCW 43.22.340, [43.22.]355, [43.22.]360, [43.22.]432, [43.22.]440 and [43.22.]480. 96-21-146, § 296-150F-0030, filed 10/23/96, effective 11/25/96.]

WAC 296-150F-0040 Will you keep my manufacturing information confidential? We will only release manufacturing information such as design plans, specifications, and test results according to the requirements of the Public Records Act (see RCW 42.17.310 (1)(h)) unless we are ordered to do so by a court or otherwise required by law.

[Statutory Authority: RCW 43.22.340 and 43.22.420. 97-16-043, § 296-150F-0040, filed 7/31/97, effective 12/1/97. Statutory Authority: RCW 43.22.340, [43.22.]355, [43.22.]360, [43.22.]432, [43.22.]440 and

[43.22.]480. 96-21-146, § 296-150F-0040, filed 10/23/96, effective 11/25/96.]

WAC 296-150F-0050 Can you prohibit the installation of factory-built housing and commercial structures? (1) We may prohibit the installation of factory-built housing and commercial structures if they do not conform to the requirements of this chapter. (See RCW 43.22.465.)

(2) If an inspection reveals that a factory-built home or commercial structure violates this chapter, we may obtain a temporary injunction enjoining the installation of any nonconforming structure. The injunction may be made permanent at the discretion of the court.

[Statutory Authority: RCW 43.22.340 and 43.22.480. 99-13-010, § 296-150F-0050, filed 6/4/99, effective 7/5/99.]

WAC 296-150F-0070 Do you have reciprocal agreements with other states to inspect factory-built housing and commercial structures, and components? (1) We have entered into reciprocal agreements with states who have construction standards that are equal to or greater than our standards for factory-built housing and commercial structures.

(2) When we have a reciprocal agreement with another state:

(a) The reciprocal state inspects factory-built housing, commercial structures, and components manufactured in that state before shipment into Washington to ensure compliance with our laws. After inspection, the reciprocal state applies our insignia.

(b) The department inspects factory-built housing, commercial structures, and components manufactured in Washington before shipment into the reciprocal state to ensure compliance with their laws. After inspection, we apply the insignia of the reciprocal state.

(3) We have reciprocal agreements on file.

[Statutory Authority: RCW 43.22.340, [43.22.]355, [43.22.]360, [43.22.]432, [43.22.]440 and [43.22.]480. 96-21-146, § 296-150F-0070, filed 10/23/96, effective 11/25/96.]

WAC 296-150F-0080 Do you allow a local enforcement agency to inspect factory-built housing, commercial structures, and components at the manufacturing location? (1) A local enforcement agency (city or county), under contract with us, can inspect factory-built housing, commercial structures, and components. In some cases their contract may be limited to specific portions of an inspection at specified manufacturing locations.

(2) After approving a unit, the local enforcement agency will attach the insignia, which indicates the unit has passed inspection.

[Statutory Authority: RCW 43.22.340, [43.22.]355, [43.22.]360, [43.22.]432, [43.22.]440 and [43.22.]480. 96-21-146, § 296-150F-0080, filed 10/23/96, effective 11/25/96.]

WAC 296-150F-0100 What happens if I disagree with your decision regarding my compliance with this chapter? (1) If we determine you are in violation of this chapter, you will receive a notice of noncompliance.

(2) If you disagree with our decision, you can send us a written request for a hearing, stating why you disagree.

(3) After we receive your hearing request, we will:

(a) Schedule a hearing within thirty days after we receive your request.

(b) Notify you of the time, date, and place for the hearing. If you fail to appear, your case will be dismissed.

(c) Hear your case.

(d) Send you written notice of our decision.

If you disagree with our decision, you may appeal it under the Administrative Procedure Act (chapter 34.05 RCW).

[Statutory Authority: RCW 43.22.340 and 43.22.420. 97-16-043, § 296-150F-0100, filed 7/31/97, effective 12/1/97. Statutory Authority: RCW 43.22.340, [43.22.]355, [43.22.]360, [43.22.]432, [43.22.]440 and [43.22.]480. 96-21-146, § 296-150F-0100, filed 10/23/96, effective 11/25/96.]

WAC 296-150F-0110 Do you have an advisory board to address factory-built housing and commercial structure issues? The factory assembled structures (FAS) board advises us on issues relating to structural, plumbing, mechanical, electrical, installation, inspections, and rules for factory-assembled structures. (See RCW 43.22.420.)

[Statutory Authority: RCW 43.22.340, [43.22.]355, [43.22.]360, [43.22.]432, [43.22.]440 and [43.22.]480. 96-21-146, § 296-150F-0110, filed 10/23/96, effective 11/25/96.]

WAC 296-150F-0120 Where can I obtain technical assistance regarding factory-built housing and commercial structures? We provide field technical service to factory-built housing and commercial structure manufacturers for an hourly fee. Field technical service may include an evaluation, consultation, plan examination, interpretation, and clarification of technical data relating to the application of our rules. It does not include inspections.

[Statutory Authority: RCW 43.22.340, [43.22.]355, [43.22.]360, [43.22.]432, [43.22.]440 and [43.22.]480. 96-21-146, § 296-150F-0120, filed 10/23/96, effective 11/25/96.]

WAC 296-150F-0130 How do I register a complaint? A person who believes that a structure or component does not meet the requirements of this chapter may register a complaint with the department. The complaint must be in writing and must specifically describe the alleged violations of this chapter. Upon receipt of the complaint, the department will forward a copy to the appropriate manufacturer and/or dealer and they shall have thirty days to respond to it. If the department determines that an inspection is necessary, the manufacturer/dealer shall pay the department for the cost of the inspection. The cost of the inspection is based upon the fee schedule in WAC 296-150F-3000 and includes the hourly inspection fee, travel costs and other expenses incurred as a result of the inspection.

[Statutory Authority: Chapter 43.22 RCW. 98-14-078, § 296-150F-0130, filed 6/30/98, effective 7/31/98.]

WAC 296-150F-0140 Do you allow the use of alternate materials, alternate design and method of construction? An applicant may apply for the use of alternate materials, alternate design and methods of construction different from the requirements of this chapter by filing a written request with the department.

(1) Responsibilities of applicant. The applicant must submit in writing the following information and sign and date the request.

(a) The applicant's name, address and phone number;

(b) The specific requirement or requirements from which the alternate material, alternate design or method of construction is requested;

(c) Justification that the requirements of this chapter cannot be met without using alternate materials, alternate design or method of construction;

(d) How the use of alternate materials, alternate design or method of construction will achieve the same result as the requirement and any specific alternative measures to be taken to show the alternate provides the same level of protection to life, safety and health as the requirements.

The department has a form that you may use for your request. Contact the department at the address shown in the definition section.

(2) Responsibilities of the department. The department will provide a written response to the applicant within thirty days of receipt of the written request. The written response will state the acceptance or denial of the request, including the reasons for the department's decision. At a minimum the department will base its decision based on:

(a) The applicant's request as described in subsection (1) of this section;

(b) Research into the request;

(c) Expert advice.

(3) Applicant's response to denials. The applicant may appeal the departments decision by following the procedure in WAC 296-150F-0100.

[Statutory Authority: RCW 43.22.340, 43.22.350, 43.22.355, 43.22.360, 43.22.400, 43.22.432, 43.22.433, 43.22.434, 43.22.450, 43.22.480, and 43.22.485. 00-17-148, § 296-150F-0140, filed 8/22/00, effective 9/30/00. Statutory Authority: RCW 43.22.340 and 43.22.480. 99-13-010, § 296-150F-0140, filed 6/4/99, effective 7/5/99.]

INSIGNIA

WAC 296-150F-0200 Who must purchase factory-built housing and commercial structure insignia? (1) You must obtain insignia from us for each factory-built house, commercial structure and component sited in Washington state.

(2) If you are a Washington state manufacturer, you do not need to purchase our insignia for your factory-built housing, commercial structures and components sold outside of Washington state.

(3) You must have an approved design plan and have passed inspection before an insignia can be attached to your factory-built home or commercial structure by us or our authorized agent.

(4) If a unit is damaged in transit after leaving the manufacturing location or during an on-site installation, and a repair is necessary, you must purchase an insignia from us. The insignia indicates that the unit was repaired.

[Statutory Authority: Chapter 43.22 RCW. 98-14-078, § 296-150F-0200, filed 6/30/98, effective 7/31/98. Statutory Authority: RCW 43.22.340, [43.22.]355, [43.22.]360, [43.22.]432, [43.22.]440 and [43.22.]480. 96-21-146, § 296-150F-0200, filed 10/23/96, effective 11/25/96.]

WAC 296-150F-0210 What are the insignia requirements? (1) If you are applying for insignia for factory-built housing, commercial structures and components you must have your design plan approved and your units and components inspected and approved by us.

(2) We will attach the insignia after:

(a) We receive the required forms and fees from you (see WAC 296-150F-3000); and

(b) Your unit or component has passed final inspection. (See WAC 296-150F-0500.)

[Statutory Authority: Chapter 43.22 RCW. 98-14-078, § 296-150F-0210, filed 6/30/98, effective 7/31/98. Statutory Authority: RCW 43.22.340, [43.22.]355, [43.22.]360, [43.22.]432, [43.22.]440 and [43.22.]480. 96-21-146, § 296-150F-0210, filed 10/23/96, effective 11/25/96.]

WAC 296-150F-0220 How do I obtain insignia information and the required forms? Upon request, we will provide you with a packet of information that includes the required forms.

[Statutory Authority: RCW 43.22.340, [43.22.]355, [43.22.]360, [43.22.]432, [43.22.]440 and [43.22.]480. 96-21-146, § 296-150F-0220, filed 10/23/96, effective 11/25/96.]

WAC 296-150F-0230 What are the insignia application requirements? (1) If you are requesting insignia for units that you intend to manufacture under a *new design plan*, your completed application must include:

(a) A completed design plan approval request form;

(b) One complete set of design plans, specifications, engineering analysis, test procedures and results, plus one additional set for each manufacturing location where the design plan will be used;

(c) At least one set of design plans must have an original wet stamp from a professional engineer or architect licensed in Washington state. We will retain the set with the original wet stamp; and

(d) A one-time initial filing fee, the design plan fee (if we approve your design plan) and the fee for each insignia. (See WAC 296-150F-3000.)

(2) If you are requesting insignia under an *approved design plan*, your completed application must include:

(a) A completed application for insignia form; and

(b) The fee for each insignia requested. (See WAC 296-150F-3000.)

[Statutory Authority: RCW 43.22.340, [43.22.]355, [43.22.]360, [43.22.]432, [43.22.]440 and [43.22.]480. 96-21-146, § 296-150F-0230, filed 10/23/96, effective 11/25/96.]

WAC 296-150F-0250 How do I replace lost or damaged insignia? (1) If an insignia is lost or damaged after it is attached to your factory-built house, commercial structure, or component, you may obtain a replacement insignia.

(2) You should contact us and provide the following information:

(a) Your name, address, and telephone number;

(b) The name of the manufacturer;

(c) The serial number;

(d) The manufacturer number (M#), if available;

(e) The insignia number, if available; and

(f) The required fee. (See WAC 296-150F-3000.)

(3) If we can determine that your unit previously had an insignia, we will attach an insignia to your unit once we receive your insignia fee. (See WAC 296-150F-3000.)

[Statutory Authority: RCW 43.22.340, [43.22.]355, [43.22.]360, [43.22.]432, [43.22.]440 and [43.22.]480. 96-21-146, § 296-150F-0250, filed 10/23/96, effective 11/25/96.]

DESIGN PLAN

WAC 296-150F-0300 When is design plan approval required? Design plans for factory-built housing and commercial structures prior to installation at the building site in Washington must be approved when:

(1) You build a new unit;

(2) You modify an approved design plan through an addendum; or

(3) You add options to an approved design plan through an addendum.

[Statutory Authority: RCW 43.22.340, [43.22.]355, [43.22.]360, [43.22.]432, [43.22.]440 and [43.22.]480. 96-21-146, § 296-150F-0300, filed 10/23/96, effective 11/25/96.]

WAC 296-150F-0310 Who can approve design plans? (1) Design plans can be approved by us or by a licensed professional or firm authorized by us (see WAC 296-150F-0420 and 296-150F-0430).

(2) All electrical design plans for new or altered electrical installations for educational institutions, health care facilities, and other buildings (see chapters 296-46, 296-130, 296-140, and 296-150 WAC Table 1 or 2) must be reviewed and approved by us.

[Statutory Authority: RCW 43.22.340, [43.22.]355, [43.22.]360, [43.22.]432, [43.22.]440 and [43.22.]480. 96-21-146, § 296-150F-0310, filed 10/23/96, effective 11/25/96.]

DESIGN-PLAN APPROVAL BY THE DEPARTMENT

WAC 296-150F-0320 What must I provide with my request for design-plan approval by the department? All requests for design-plan approval must include:

(1) A completed design-plan approval request form;

(2) One complete set of design plans, specifications, engineering analysis, test procedures and results plus one additional set for each manufacturing location where the design plan will be used (see WAC 296-150F-0340 and 296-150F-0350);

(3) At least one set of design plans must have an original wet stamp from a professional engineer or architect licensed in Washington state. All new, renewed, and resubmitted plans, specifications, reports and structural calculations prepared by or prepared under his or her direct supervision shall be signed, dated and stamped with their seal. Specifications, reports, and structural calculations may be stamped only on the first sheet, provided this first sheet identifies all of the sheets that follow are included and identified in the same manner. Plans that have not been prepared by or under the engineer's or architect's supervision shall be reviewed by them and they shall prepare a report concerning the plans reviewed. This report shall:

(a) Identify which drawings have been reviewed by drawing number and date;

(b) Include a statement that the plans are in compliance with current Washington state regulations; and

(c) The report shall be stamped and signed by the reviewer.

Any deficiencies shall be corrected on the drawings before submitting to the department or be included in the report and identify as to how they are to be corrected. This report shall be attached to the plan(s) that were reviewed. We will retain the set with the original wet stamp;

(4) A one-time initial filing fee and the design-plan fee (see WAC 296-150F-3000); and

(5) A "key drawing" to show the arrangement of modules if the plan covers three or more modules.

[Statutory Authority: RCW 43.22.340 and 43.22.480. 99-13-010, § 296-150F-0320, filed 6/4/99, effective 7/5/99. Statutory Authority: RCW 43.22.340, [43.22.]355, [43.22.]360, [43.22.]432, [43.22.]440 and [43.22.]480. 96-21-146, § 296-150F-0320, filed 10/23/96, effective 11/25/96.]

WAC 296-150F-0340 What must an engineering analysis for design plans include? (1) The engineering analysis must show that the structural design meets the requirements of this chapter.

(2) An engineering analysis must be conducted according to accepted engineering practices and must be signed by a professional engineer or architect licensed in Washington state.

[Statutory Authority: RCW 43.22.340, [43.22.]355, [43.22.]360, [43.22.]432, [43.22.]440 and [43.22.]480. 96-21-146, § 296-150F-0340, filed 10/23/96, effective 11/25/96.]

WAC 296-150F-0350 What must the test procedures and results for design plans include? (1) Tests to a design for a factory-built home or commercial structure must be witnessed by a professional engineer or architect licensed in Washington state.

(2) Test reports must contain the following items:

(a) A description of the methods or standards that applied to the test;

(b) Drawings and a description of the item tested;

(c) A description of the test setup;

(d) The procedure used to verify the correct load;

(e) The procedure used to measure each condition;

(f) Test data, including applicable graphs and observations of the characteristics and behavior of the item tested; and

(g) Analysis, comments, and conclusion.

(3) The written test procedures, results and conclusions must reference the applicable design plan.

[Statutory Authority: RCW 43.22.340, [43.22.]355, [43.22.]360, [43.22.]432, [43.22.]440 and [43.22.]480. 96-21-146, § 296-150F-0350, filed 10/23/96, effective 11/25/96.]

WAC 296-150F-0380 What happens if you approve my design plan? (1) Your design plan will be approved if it meets the requirements of this chapter.

(2) We will send you an approved copy of the design plan with the design-plan approval number.

(3) You must keep copies of the approved design plan at each location where a factory-built house, commercial structure, or component is built.

(4) If your design plan is not approved, you will be notified in writing of plan deficiencies. You may send a corrected design plan to us. (See WAC 296-150F-3000.)

[Statutory Authority: RCW 43.22.340, [43.22.]355, [43.22.]360, [43.22.]432, [43.22.]440 and [43.22.]480. 96-21-146, § 296-150F-0380, filed 10/23/96, effective 11/25/96.]

WAC 296-150F-0390 If my design plan is not approved, how much time do I have to submit a corrected design plan? (1) You have ninety days to correct and resubmit your original design plan and send us the resubmittal fee after we notify you of plan deficiencies. After ninety days, your initial design plan is returned to you.

(2) If you submit your corrected design plan after ninety days, you must send the initial design plan fee instead of the resubmittal fee. (See WAC 296-150F-3000.)

[Statutory Authority: RCW 43.22.340, [43.22.]355, [43.22.]360, [43.22.]432, [43.22.]440 and [43.22.]480. 96-21-146, § 296-150F-0390, filed 10/23/96, effective 11/25/96.]

WAC 296-150F-0400 What happens after my design plan is approved? Once your design plan is approved, we will inspect each related factory-built house, commercial structure, or component.

[Statutory Authority: RCW 43.22.340, [43.22.]355, [43.22.]360, [43.22.]432, [43.22.]440 and [43.22.]480. 96-21-146, § 296-150F-0400, filed 10/23/96, effective 11/25/96.]

WAC 296-150F-0410 When does my design plan expire? Master design plan:

(1) Your master design plan expires when there is a code change. You must submit new design plans for approval when there is a State Building Code cycle change. You may use your approved master design plans to order insignia as long as they comply with the applicable codes.

One-year design plan:

(2) Your factory-built home or commercial structure one-year design plan expires either one year after approval or when there is a code change. You must submit new design plans for approval when there is a State Building Code cycle change. You may use your design plan to order insignia as long as they comply with the applicable codes.

(3) All National Electrical Code amendments may be incorporated by an addendum to your design plan.

Note: The State Building Code is on a three-year code cycle which coincides with the State Building Code council amendment cycle. The National Electrical Code (NEC) cycle, however, does not coincide with the other code cycles.

[Statutory Authority: RCW 43.22.340, [43.22.]355, [43.22.]360, [43.22.]432, [43.22.]440 and [43.22.]480. 96-21-146, § 296-150F-0410, filed 10/23/96, effective 11/25/96.]

WAC 296-150F-0415 Who approves addendums to design plans approved by the department? You must have us approve an addendum to a design plan, if we initially approved your design plan.

[Statutory Authority: RCW 43.22.340, [43.22.]355, [43.22.]360, [43.22.]432, [43.22.]440 and [43.22.]480. 96-21-146, § 296-150F-0415, filed 10/23/96, effective 11/25/96.]

DESIGN-PLAN APPROVAL BY A LICENSED PROFESSIONAL OR FIRM

WAC 296-150F-0420 Who can be authorized to approve design plans? (1) A professional engineer, architect or firm licensed by the state of Washington according to the Engineers Registration Act, chapter 18.43 RCW and/or the Architects Registration Act, chapter 18.08 RCW; or

(2) A professional engineer, architect or firm licensed in another state that has licensing or certification requirements that meet or exceed Washington requirements.

[Statutory Authority: RCW 43.22.340, [43.22.]355, [43.22.]360, [43.22.]432, [43.22.]440 and [43.22.]480. 96-21-146, § 296-150F-0420, filed 10/23/96, effective 11/25/96.]

WAC 296-150F-0430 What information must a professional or firm provide to be authorized to approve design plans? (1) Name, a copy of your certificate of registration, and address of the professional engineer or architect; or

(2) Name, a copy of your certificate of authority, and address of the firm; and

(3) A description of the services the professional engineer, architect, or firm will provide; and

(4) A description of the professional's area(s) of expertise and qualifications which include:

(a) A summary of the professional's or firm's experience; and

(b) Verification of experience in your area of expertise such as structural, mechanical, plumbing, energy, electrical, fire and life safety, and ventilation and indoor air quality.

[Statutory Authority: RCW 43.22.340, [43.22.]355, [43.22.]360, [43.22.]432, [43.22.]440 and [43.22.]480. 96-21-146, § 296-150F-0430, filed 10/23/96, effective 11/25/96.]

WAC 296-150F-0440 How will I know whether I am authorized to approve design plans? Within sixty days after you submit the information requested in WAC 296-150F-0430, we will send you a letter either approving or denying your authorization request.

(1) If we approve your request, your name is added to the list of licensed professionals and firms authorized to approve design plans.

(a) We will authorize a professional to approve portions of a design plan within his or her area of expertise; and

(b) We will authorize an engineering or architectural firm to approve plans if the firm employs or contracts with professionals within the area of expertise necessary for the design plan.

(2) If we do not approve your request, we will notify you in writing why we are denying your request for authorization. If you disagree with our decision, you can send us a written request for a hearing, stating why you disagree. (See WAC 296-150F-0100.)

[Statutory Authority: RCW 43.22.340, [43.22.]355, [43.22.]360, [43.22.]432, [43.22.]440 and [43.22.]480. 96-21-146, § 296-150F-0440, filed 10/23/96, effective 11/25/96.]

WAC 296-150F-0450 How long is a licensed professional or firms authorization effective? Your authorization to approve design plans is effective until your license expires, is revoked or is suspended.

(1) You must notify us of your license renewal at least fifteen days before your license expires, to prevent your name from being removed from our licensed professional and firm list.

(2) You must notify us immediately if your license is revoked or suspended. Your name is then removed from the list of licensed professionals and firms authorized to approve design plans.

[Statutory Authority: RCW 43.22.340, [43.22.]355, [43.22.]360, [43.22.]432, [43.22.]440 and [43.22.]480. 96-21-146, § 296-150F-0450, filed 10/23/96, effective 11/25/96.]

WAC 296-150F-0460 What information must a manufacturer provide when a professional or firm does the design plan approval? You must provide the following information with your approved design plan:

(1) A completed departmental design plan approval request form;

(2) Two or more sets of the design plans plus elevation drawings, specifications, engineering analysis, and test results and procedures necessary for a complete evaluation of the design. These design plans must have an original wet stamp, be signed, and dated by the approving professional(s) (see WAC 296-150F-0340 and 296-150F-0350);

(3) A cover sheet on the design plan noting which professional approved each portion of the design plan;

(4) A copy of the authorization letter from us;

(5) The design plan fee for design plans approved by professionals or firms (see WAC 296-150F-3000);

(6) A professional who designs and certifies that the factory-built home or commercial structure design meets state requirements cannot also approve the design plan in the plan approval process;

(7) A professional cannot approve those electrical designs listed in WAC 296-150F-0310(2); and

(8) A professional cannot approve plans submitted under a reciprocal agreement.

[Statutory Authority: Chapter 43.22 RCW. 98-14-078, § 296-150F-0460, filed 6/30/98, effective 7/31/98. Statutory Authority: RCW 43.22.340, [43.22.]355, [43.22.]360, [43.22.]432, [43.22.]440 and [43.22.]480. 96-21-146, § 296-150F-0460, filed 10/23/96, effective 11/25/96.]

WAC 296-150F-0470 What happens after we receive the professional or firm approved design plan and information? (1) After we receive your approved design plans and information, we will review the information and assign a plan approval number. We will send a copy of the design plan with the plan approval number to the manufacturer.

(2) We may periodically audit design plans approved by a professional engineer, architect, or firm to ensure compliance with design plan requirements. The department's periodic audit should not be construed as certifying that the plans are safe.

(3) If the audit reveals that the design plans approved by the professionals and firms do not comply with this chapter, you will be notified and required to pay our fees for review and approval of the design plans. (See WAC 296-150F-3000.)

[Statutory Authority: RCW 43.22.340, [43.22.]355, [43.22.]360, [43.22.]432, [43.22.]440 and [43.22.]480. 96-21-146, § 296-150F-0470, filed 10/23/96, effective 11/25/96.]

WAC 296-150F-0480 Do you have a list of professionals or firms that are authorized to submit design plans? We will maintain a list of the licensed professionals and firms that are authorized to approve design plans for factory-built housing and commercial structures.

[Statutory Authority: RCW 43.22.340, [43.22.]355, [43.22.]360, [43.22.]432, [43.22.]440 and [43.22.]480. 96-21-146, § 296-150F-0480, filed 10/23/96, effective 11/25/96.]

WAC 296-150F-0490 Who approves addendums to design plans approved by a professional or firm? (1) You must have the professional or firm approve an addendum to a design plan, if they initially approved your design plan.

(2) If the professional or firm who approved your design plan is no longer on the department list you may have us approve your addendum.

[Statutory Authority: RCW 43.22.340, [43.22.]355, [43.22.]360, [43.22.]432, [43.22.]440 and [43.22.]480. 96-21-146, § 296-150F-0490, filed 10/23/96, effective 11/25/96.]

INSPECTIONS PRIOR TO ISSUANCE OF AN INSIGNIA

WAC 296-150F-0500 When is an inspection required? (1) Before we issue an insignia, each factory-built house, commercial structure, and component must be inspected at the manufacturing location as many times as are required by the codes. (See WAC 296-150F-0600.) Inspections may include:

(a) A "cover" inspection during construction of the unit before the electrical, plumbing, mechanical, and structural systems are covered;

(b) Insulation and vapor barrier inspection, if required;

(c) Other required code inspections;

(d) A final inspection after the factory-built house, commercial structure, or component is complete;

Note: Each factory-built house, commercial structure, and component must have a serial number to enable us to track inspections.

(2) If we discover a violation during inspection, we will issue a notice of noncompliance. You can correct the violation during the inspection. If you cannot correct the violation during inspection, you must leave the item uncovered until we approve your correction.

(3) After a unit is manufactured but before occupancy, we must inspect a factory-built house or commercial structure if it is damaged in transit to the building site or during on-site installation. This is considered a repair inspection. (See WAC 296-150F-0540.)

(4) Approved design plans must be available in compliance with the applicable sections of adopted state codes.

(5) Once your unit is inspected and approved we will attach the insignia.

(6) Components shall be identified as having been approved by attaching an insignia to the first component and

all additional components for one job site shall have a label issued by the department as having been approved.

Note: We only inspect factory-built housing and commercial structures before occupancy. After occupancy, the local enforcement agency is the inspection agency.

[Statutory Authority: RCW 43.22.340, 43.22.350, 43.22.355, 43.22.360, 43.22.400, 43.22.432, 43.22.433, 43.22.434, 43.22.450, 43.22.480, and 43.22.485. 00-17-148, § 296-150F-0500, filed 8/22/00, effective 9/30/00. Statutory Authority: Chapter 43.22 RCW. 98-14-078, § 296-150F-0500, filed 6/30/98, effective 7/31/98. Statutory Authority: RCW 43.22.340, [43.22.]355, [43.22.]360, [43.22.]432, [43.22.]440 and [43.22.]480. 96-21-146, § 296-150F-0500, filed 10/23/96, effective 11/25/96.]

WAC 296-150F-0510 How do I request an inspection? (1) You must contact us, and we will let you know where your request for inspection should be submitted. Our address is noted in the definition of department.

(2) We must receive in-state inspection requests at least seven calendar days prior to the date that you want the inspection.

(3) We must receive out-of-state inspection requests at least fourteen calendar days prior to the date that you want the inspection.

[Statutory Authority: RCW 43.22.340, [43.22.]355, [43.22.]360, [43.22.]432, [43.22.]440 and [43.22.]480. 96-21-146, § 296-150F-0510, filed 10/23/96, effective 11/25/96.]

WAC 296-150F-0520 What happens if my factory-built house or commercial structure passes inspection? (1) If your factory-built house or commercial structure passes inspection and you have met the other requirements of this chapter, we will attach the insignia.

(2) After our final inspection, we will send a notice to the local enforcement agency (NLEA) indicating whether further inspection is necessary. (See WAC 296-150F-0550.)

[Statutory Authority: RCW 43.22.340, [43.22.]355, [43.22.]360, [43.22.]432, [43.22.]440 and [43.22.]480. 96-21-146, § 296-150F-0520, filed 10/23/96, effective 11/25/96.]

WAC 296-150F-0530 Am I charged if I request an inspection but I am not prepared? (1) If you ask us to inspect a factory-built house or commercial structure within Washington state but you are not prepared when we arrive, you must pay the minimum inspection fee and travel. (See WAC 296-150F-3000.)

(2) If you ask us to inspect a factory-built home, commercial structure, or component outside Washington state but you are not prepared when we arrive, you must pay the minimum inspection fee, travel, and per diem expenses. (See WAC 296-150F-3000.)

[Statutory Authority: RCW 43.22.340, [43.22.]355, [43.22.]360, [43.22.]432, [43.22.]440 and [43.22.]480. 96-21-146, § 296-150F-0530, filed 10/23/96, effective 11/25/96.]

WAC 296-150F-0540 Who inspects factory-built housing and commercial structures for installation at the building site? (1) The local enforcement agency (city or county) must approve the installation.

(2) The local enforcement agency may also request a set of design plans and specifications for the unit from you.

(3) After the unit is manufactured but before occupancy, we must inspect a factory-built house or commercial structure if it is damaged in transit to the building site or during on-site installation. This is considered a repair inspection.

Note: The local enforcement agency may not open the concealed construction of a factory-built house or commercial structure to inspect if our insignia is attached.

[Statutory Authority: RCW 43.22.340, [43.22.]355, [43.22.]360, [43.22.]432, [43.22.]440 and [43.22.]480. 96-21-146, § 296-150F-0540, filed 10/23/96, effective 11/25/96.]

WAC 296-150F-0550 Do you notify the local enforcement agency after your final inspection of factory-built structures at a manufacturing location? After we perform a final inspection of a factory-built, commercial structure, or component, we will send a notice to the local enforcement agency (NLEA) that:

(1) Specifies what connections, standards, and incomplete items the local enforcement agency must check when the unit is installed; and/or

(2) Estimates the expected time of arrival of the factory-built house or commercial structure to the site.

[Statutory Authority: RCW 43.22.340, [43.22.]355, [43.22.]360, [43.22.]432, [43.22.]440 and [43.22.]480. 96-21-146, § 296-150F-0550, filed 10/23/96, effective 11/25/96.]

USED FACTORY-BUILT STRUCTURES WITHOUT AN INSIGNIA

WAC 296-150F-0580 Must I obtain an insignia for used factory-built structures? All used factory-built housing and commercial structures that are to be installed on a building site in Washington state must have an insignia of approval from us prior to being installed on a building site.

[Statutory Authority: RCW 43.22.340, [43.22.]355, [43.22.]360, [43.22.]432, [43.22.]440 and [43.22.]480. 96-21-146, § 296-150F-0580, filed 10/23/96, effective 11/25/96.]

WAC 296-150F-0590 How do I obtain insignia for used factory-built structures? We consider used factory-built housing and commercial structures as new structures for purposes of insignia approval. To obtain insignia, you must:

(1) Have the design plan approved by us (see WAC 296-150F-0300 through 296-150F-0480);

(2) Purchase insignia (see WAC 296-150F-0200 through 296-150F-0230); and

(3) Pass a unit inspection (see WAC 296-150F-0500 through 296-150F-0550).

Note: You will be required to open up as much of the construction of the unit as is necessary for inspection to show compliance with your approved design plan.

[Statutory Authority: RCW 43.22.340, [43.22.]355, [43.22.]360, [43.22.]432, [43.22.]440 and [43.22.]480. 96-21-146, § 296-150F-0590, filed 10/23/96, effective 11/25/96.]

CODES FOR FACTORY-BUILT HOUSING, COMMERCIAL STRUCTURES, AND COMPONENTS

WAC 296-150F-0600 What manufacturing codes apply to factory-built housing and commercial structures? (1) All design, construction, installations, and alterations of factory-built housing, commercial structures, and components must conform with the following codes and the requirements of this chapter:

(a) The State Building Code, chapter 19.27 RCW;

Note: The Uniform Building Code reference to "building official" means the chief prefabricated building specialist or authorized representative at the department of labor and industries.

(b) The Energy Related Building Standards, chapter 19.27A RCW;

(c) The National Electrical Code as referenced in chapter 19.28 RCW and chapters 296-46 and 296-401 WAC.

(2) All construction methods and installations must use accepted engineering practices, provide minimum health and safety to the occupants of factory-built structures and the public, and demonstrate journeyperson quality of work of the various trades.

(3) Requirements for any size, weight, or quality of material modified by the terms "minimum," "not less than," "at least," and similar expressions are minimum standards. The manufacturer may exceed these standards, provided the deviation does not result in inferior installation or defeat the purpose and intent of the standard.

Note: The codes, RCW's, and WAC's referenced in this rule are available for reference at the Washington State Library, the Washington State Law Library, and may be available at your local library.

[Statutory Authority: RCW 43.22.340, [43.22.]355, [43.22.]360, [43.22.]432, [43.22.]440 and [43.22.]480. 96-21-146, § 296-150F-0600, filed 10/23/96, effective 11/25/96.]

WAC 296-150F-0605 May the required toilet facilities be located in an adjacent building? Under the following conditions, the department will allow the required toilet facilities to be located in adjacent building(s):

(1) The manufacturer shall note in the plan submittal that the requirements of IBC Chapter 29, Section 2902 and Section 2902.1, as amended by the state building code must be verified by the building official; and

(2) A Notification to Local Enforcement Agency (NLEA) must accompany each unit so that the requirements of IBC Chapter 29, Section 2902 and Section 2902.1 as amended by the state building code can be verified by the building official.

[Statutory Authority: Chapter 43.22 RCW and 2003 c 291. 05-01-102, § 296-150F-0605, filed 12/14/04, effective 2/1/05. Statutory Authority: RCW 43.22.340 and 43.22.480. 99-13-010, § 296-150F-0605, filed 6/4/99, effective 7/5/99.]

WAC 296-150F-0610 Do you require the exit doors to be one-half the diagonal distance apart if each area served has its own exit door? If the area served has an occupant load requiring only one exit and a building contains more than one area where each area is served by individual exits, and a personnel door is added between adjoining rooms, a personnel door in the partition wall will not be construed to create a larger area served. The exits will not be required to be one-half of the diagonal apart.

[Statutory Authority: RCW 43.22.340 and 43.22.480. 99-13-010, § 296-150F-0610, filed 6/4/99, effective 7/5/99.]

WAC 296-150F-0620 Does the department require a water system expansion tank be installed? The department will only require that a tee be installed in an accessible location for the future addition of an expansion tank where one may be installed if required.

[Statutory Authority: RCW 43.22.340 and 43.22.480. 99-13-010, § 296-150F-0620, filed 6/4/99, effective 7/5/99.]

WAC 296-150F-0625 Are there any special requirements for portable school classrooms? In addition to the requirements in the state building code, the department of health has rules regulating primary and secondary schools in chapter 246-366 WAC. One of those requirements is that "Instructional areas shall have a minimum average ceiling height of 8 feet."

[Statutory Authority: RCW 43.22.340 and 43.22.480. 99-13-010, § 296-150F-0625, filed 6/4/99, effective 7/5/99.]

WAC 296-150F-0630 When HVAC equipment is supplied with more than one CFM rating, which rating do I use? Where HVAC equipment manufacturers show multiple cubic feet per minute (CFM) ratings and/or multiple water gauge ratings, you must use the highest rated capacity.

[Statutory Authority: RCW 43.22.340, 43.22.350, 43.22.355, 43.22.360, 43.22.400, 43.22.432, 43.22.433, 43.22.434, 43.22.450, 43.22.480, and 43.22.485. 00-17-148, § 296-150F-0630, filed 8/22/00, effective 9/30/00.]

MANUFACTURER'S NOTICE TO THE DEPARTMENT

WAC 296-150F-0700 Must manufacturers of factory-built housing and commercial structures notify you if they manufacture at more than one location? (1) If you are manufacturing factory-built housing and commercial structures at more than one location, approved design plans must be available at each manufacturing location.

(2) You are required to send us the following information for each manufacturing location:

(a) Company name;

(b) Mailing and physical address; and

(c) Phone and fax number if available.

(3) You must update this information as it changes.

[Statutory Authority: RCW 43.22.340, [43.22.]355, [43.22.]360, [43.22.]432, [43.22.]440 and [43.22.]480. 96-21-146, § 296-150F-0700, filed 10/23/96, effective 11/25/96.]

WAC 296-150F-0710 Must manufacturers of factory-built housing and commercial structures notify you of a change in business name or address? (1) If you are moving, notify us in writing prior to a change of business name or address.

(2) Your notice must include the change of name and address.

[Statutory Authority: RCW 43.22.340, [43.22.]355, [43.22.]360, [43.22.]432, [43.22.]440 and [43.22.]480. 96-21-146, § 296-150F-0710, filed 10/23/96, effective 11/25/96.]

WAC 296-150F-0720 Must manufacturers of factory-built housing and commercial structures notify you of a change in business ownership? (1) When a manufacturer changes ownership, the new owner must notify us in writing immediately.

(2) A new owner may continue to manufacture the units according to a prior approved design plan if the prior owner releases the design plan.

[Statutory Authority: RCW 43.22.340, [43.22.]355, [43.22.]360, [43.22.]432, [43.22.]440 and [43.22.]480. 96-21-146, § 296-150F-0720, filed 10/23/96, effective 11/25/96.]

FACTORY-BUILT HOUSING AND COMMERCIAL STRUCTURE FEES

WAC 296-150F-3000 Factory-built housing and commercial structure fees.

INITIAL FILING FEE	$55.70
DESIGN PLAN FEES:	
INITIAL FEE - MASTER DESIGN (CODE CYCLE)	$274.50
INITIAL FEE - ONE YEAR DESIGN	$160.90
RENEWAL FEE	$55.70
RESUBMIT FEE	$80.40
ADDENDUM (Approval expires on same date as original plan.)	$80.40
ELECTRONIC PLAN SUBMITTAL FEE $4.70 per page for the first set of plans and $0.30 per page for each additional set of plans. These fees are in addition to any applicable design plan fees required under this section.	
ELECTRICAL PLAN REVIEW (When required by chapter 296-46A WAC, Plan review for educational, institutional or health care facilities and other buildings):	
Electrical Plan submission fee	$61.30
Service/feeder Ampacity:	
0 - 100	$27.20
101 - 200	$33.90
201 - 400	$63.40
401 - 600	$74.90
601 - 800	$96.40
801 - 1000	$118.00
Over 1000	$128.00
Over 600 volts surcharge	$20.30
Thermostats:	
First	$12.10
Each additional	$3.00
Low voltage fire alarm and burglar alarm:	
Each control panel and up to four circuits or zones	$11.00
Each additional circuit or zone	$2.00
Generators, refer to appropriate service/feeder ampacity fees	
Note: Altered services or feeders shall be charged the above rate per the service/feeder ampacity fees.	
Supplemental submissions of plans (resubmittals, addendums, renewals, code updates, etc.) will be charged per hour or fraction of an hour*	$72.50
ELECTRICAL COMMERCIAL/INDUSTRIAL	
Electrical Service /feeders Ampacity	201 plus
Service/feeder	$184.30
Additional Feeder	$35.00
ELECTRICAL MULTIFAMILY RESIDENTIAL	
Electrical Service/feeders	201 plus
Service/feeder	$97.80
Additional Feeder	$25.00
MEDICAL GAS PLAN REVIEW:	
SUBMISSION FEE	$76.30
FIRST STATION	$76.30
EACH ADDITIONAL STATION	$27.80
RECIPROCAL PLAN REVIEW:	
INITIAL FEE-MASTER DESIGN	$122.80
INITIAL FEE-ONE YEAR DESIGN	$74.30
RENEWAL FEE	$74.30
ADDENDUM	$74.30
PLANS APPROVED BY DESIGN PROFESSIONALS	$55.70
APPROVAL OF EACH SET OF DESIGN PLANS BEYOND FIRST TWO SETS	$14.40
DEPARTMENT INSPECTION FEES	
INSPECTION/REINSPECTION (Per hour* plus travel time* and mileage**)	$71.20
TRAVEL (Per hour*)	$71.20

PER DIEM**	
HOTEL***	
MILEAGE**	
RENTAL CAR***	
PARKING***	
AIRFARE***	
DEPARTMENT AUDIT FEES:	
AUDIT (Per hour*)	$71.20
TRAVEL (Per hour*)	$71.20
PER DIEM**	
HOTEL***	
MILEAGE**	
RENTAL CAR***	
PARKING***	
AIRFARE***	
INSIGNIA FEES:	
FIRST SECTION	$227.00
EACH ADDITIONAL SECTION	$20.60
REISSUED-LOST/DAMAGED	$55.70
OTHER FEES:	
FIELD TECHNICAL SERVICE (Per hour* plus travel time* and mileage**)	$71.20
NOTIFICATION TO LOCAL ENFORCEMENT AGENCY (NLEA)	$30.90
PUBLICATION PRINTING AND DISTRIBUTION OF RCW'S AND WAC'S (One free copy per year upon request)	$11.60
* Minimum charge of 1 hour; time spent greater than 1 hour is charged in 1/2 hour increments.	
** Per state guidelines.	
*** Actual charges incurred.	

[Statutory Authority: Chapter 43.22 RCW and 2003 c 291. 05-01-102, § 296-150F-3000, filed 12/14/04, effective 2/1/05. Statutory Authority: Chapters 18.27 and 43.22 RCW. 04-12-048, § 296-150F-3000, filed 5/28/04, effective 6/30/04. Statutory Authority: RCW 43.22.340, 43.22.400, 43.22.432, 43.22.433, 43.22.434, 43.22.480, and 43.22.485, 2002 c 268, and chapter 43.22 RCW. 03-12-044, § 296-150F-3000, filed 5/30/03, effective 5/30/03. Statutory Authority: RCW 43.22.350, 43.22.434, 43.22.480, 43.22.500, 18.27.070, 18.27.075, 70.87.030, 19.28.041, 19.28.051, 19.28.101, 19.28.121, 19.28.161, 19.28.201, 19.28.211, 19.28.341, 2001 c 159, and chapters 43.22, 19.28, 18.27, and 70.87 RCW. 01-12-035, § 296-150F-3000, filed 5/29/01, effective 6/29/01. Statutory Authority: Chapters 43.22, 18.27, 70.87 and 19.28 RCW. 99-12-080, § 296-150F-3000, filed 5/28/99, effective 6/28/99. Statutory Authority: Chapters 18.106, 18.27 and 43.22 RCW. 98-12-041, § 296-150F-3000, filed 5/29/98, effective 6/30/98. Statutory Authority: RCW 70.87.030, 18.27.070, [18.27.]075, 43.22.350, [43.22.]355, [43.22.]434 and [43.22.]480(2). 97-11-053, § 296-150F-3000, filed 5/20/97, effective 6/30/97. Statutory Authority: RCW 43.22.340, [43.22.]355, [43.22.]360, [43.22.]432, [43.22.]440 and [43.22.]480. 96-21-146, § 296-150F-3000, filed 10/23/96, effective 11/25/96.]

Chapter 296-150M WAC
MANUFACTURED HOMES

WAC

296-150M-0010 Authority, purpose, and scope.
296-150M-0020 What definitions apply to this chapter?
296-150M-0040 Will you keep my manufacturing information confidential?
296-150M-0049 What must be done prior to the sale of an installed manufactured or mobile home by a homeowner?
296-150M-0050 When can a manufactured home be posted with a prohibited sale or lease notice?
296-150M-0051 Can I sell or lease a manufactured home that has been posted with a prohibited sale or lease notice?
296-150M-0060 Who handles consumer complaints about manufactured homes?
296-150M-0100 What happens if I disagree with your decision regarding my compliance with the federal standards, ANSI, or this chapter?
296-150M-0120 Where can I obtain technical assistance regarding manufactured (mobile) homes?
296-150M-0140 Do you allow a variance from these rules for the use of alternate materials, alternate design and methods of construction?

INSIGNIA

296-150M-0200 What labels or insignia are required on my manufactured home?
296-150M-0250 How do I replace a lost or damaged insignia?
296-150M-0260 Who do I contact for replacement HUD labels?

ALTERATIONS AND INSPECTIONS

ALTERATION APPROVAL

296-150M-0300 What approval do I need to alter a manufactured home?
296-150M-0302 What are some examples of work to manufactured or mobile homes that either require or do not require a permit and inspection?
296-150M-0306 What codes are used when altering a manufactured (mobile) home?
296-150M-0307 How may I obtain a copy of the Manufactured Home Construction and Safety Standards, Part 24, CFR 3280?
296-150M-0309 How do I apply for alteration approval and obtain an alteration insignia?
296-150M-0310 What happens if I fail to get your approval prior to altering a manufactured home?
296-150M-0320 What must I provide to request approval of an alteration?
296-150M-0322 Data requirements for the identification of indigent persons.
296-150M-0330 How do I obtain alteration insignia information and the forms you require?
296-150M-0331 Does my alteration permit expire?
296-150M-0340 What must an engineering analysis for design plans include?
296-150M-0350 What must the test procedures and results for design plans include?
296-150M-0360 When is design plan approval required for an alteration?
296-150M-0370 How do I obtain alteration design plan approval?
296-150M-0380 How will I know whether you have approved my design plan?
296-150M-0390 If my design plan is not approved, how much time do I have to submit a corrected plan?

INSPECTION

296-150M-0500 When must an inspection be requested?
296-150M-0530 Am I charged if I request an inspection but am not prepared when you arrive?

INSTALLATION REQUIREMENTS

INSTALLATION, PERMIT, INSPECTION, DISPUTE

296-150M-0600 Who establishes standards for installation of manufactured homes?
296-150M-0610 What instructions are used for a manufactured home installation?

296-150M-0614 How may I obtain a copy of the American National Standards Institute (ANSI) A225.1-Manufactured Homes Installation?
296-150M-0615 What are the requirements for temporary placement of manufactured (mobile) homes?
296-150M-0620 Do local enforcement agencies have special requirements for installing manufactured homes in hazardous areas?
296-150M-0630 Who may install a manufactured home?
296-150M-0640 Does a person who installs a manufactured home need an installation permit?
296-150M-0650 Does a manufactured home installation require an inspection?
296-150M-0655 How does the local enforcement agency gain access to the manufacturer's installation instructions?
296-150M-0660 What are the requirements for on-site structures and who regulates them?
296-150M-0670 What happens if a dispute arises concerning an installation requirement?

AUDIT

296-150M-0705 Definitions applicable to this part.
296-150M-0715 May the department audit the records of a contractor?
296-150M-0725 What procedures will the department follow when auditing the records of construction, plumbing and electrical contractors?

PENALTIES

296-150M-0800 Definitions applicable to this part.
296-150M-0805 How does the department ensure that a contractor, firm, partnership, or corporation complies with the requirements of chapter 43.22 RCW?
296-150M-0810 What violations of chapter 43.22 RCW can result in the issuance of a notice of infraction?
296-150M-0815 What information must be included in a notice of infraction?
296-150M-0820 Who can be issued a notice of infraction?
296-150M-0830 How does a contractor, firm, partnership, or corporation appeal a notice of infraction?
296-150M-0835 Who presides over an appeal hearing and where is it held?
296-150M-0840 Who will represent the appellant and the department at the appeal hearing?
296-150M-0845 How is the appeal hearing conducted?
296-150M-0855 What does the department do with the appeal notices that they receive?
296-150M-0860 What monetary penalties will be assessed for an infraction issued for violations of chapter 43.22 RCW and this chapter?
296-150M-0865 When must a contractor, firm, partnership, or corporation pay assessed monetary penalties?

MANUFACTURED HOME FEES

296-150M-3000 Manufactured home fees.

DISPOSITION OF SECTIONS FORMERLY CODIFIED IN THIS CHAPTER

296-150M-0400 How do I apply for alteration approval and obtain an alteration insignia? [Statutory Authority: Chapter 43.22 RCW. 98-14-078, § 296-150M-0400, filed 6/30/98, effective 7/31/98. Statutory Authority: RCW 43.22.340, [43.22.]355, [43.22.]360, [43.22.]432, [43.22.]440 and [43.22.]480. 96-21-146, § 296-150M-0400, filed 10/23/96, effective 11/25/96.] Repealed by 99-13-010, filed 6/4/99, effective 7/5/99. Statutory Authority: RCW 43.22.340 and 43.22.480.

296-150M-0700 Acceptable types of ground cover. [Statutory Authority: RCW 43.22.340, [43.22.]355, [43.22.]360, [43.22.]432, [43.22.]440 and [43.22.]480. 96-21-146, § 296-150M-0700, filed 10/23/96, effective 11/25/96.] Repealed by 98-14-078, filed 6/30/98, effective 7/31/98. Statutory Authority: Chapter 43.22 RCW.

296-150M-0710 Clearance under manufactured homes. [Statutory Authority: RCW 43.22.340, [43.22.]355, [43.22.]360, [43.22.]432, [43.22.]440 and [43.22.]480. 96-21-146, § 296-150M-0710, filed 10/23/96, effective 11/25/96.] Repealed by 98-14-078, filed 6/30/98, effective 7/31/98. Statutory Authority: Chapter 43.22 RCW.

296-150M-0720 Water heater relief lines. [Statutory Authority: RCW 43.22.340, [43.22.]355, [43.22.]360, [43.22.]432, [43.22.]440 and [43.22.]480. 96-21-146, § 296-150M-0720, filed 10/23/96, effective 11/25/96.] Repealed by 98-18-036, filed 8/27/98, effective 9/27/98. Statutory Authority: Chapters 43.22 and 34.05 RCW and Executive Order 97-02.

296-150M-0730 Heat pump. [Statutory Authority: RCW 43.22.340, [43.22.]355, [43.22.]360, [43.22.]432, [43.22.]440 and [43.22.]480. 96-21-146, § 296-150M-0730, filed 10/23/96, effective 11/25/96.] Repealed by 98-14-078, filed 6/30/98, effective 7/31/98. Statutory Authority: Chapter 43.22 RCW.

WAC 296-150M-0010 Authority, purpose, and scope. (1) This chapter is authorized by RCW 43.22.340 through 43.22.445. The law requires that any alteration to a manufactured home be approved by the department. A manufactured home with an approved alteration requires an alteration insignia. Alteration insignia can be purchased from us.

(2) The United States Department of Housing and Urban Development (HUD), manufactured housing standards division, has given us the authority to act as a manufactured home production Inspection Primary Inspection Agency (IPIA) and enforce 24 CFR 3280. As an IPIA:

(a) We are required to inspect every manufactured home built in Washington state sometime during production;

(b) We are authorized to audit the quality control program and the performance of quality control inspectors of manufactured home factories located in Washington state;

(c) We are authorized to supply a HUD label to the manufacturer following our inspection and approval of the manufactured home and the manufacturer's quality control program; and

(d) We are authorized to remove HUD labels according to the guidelines stated in the IPIA inspector's manual.

Note: A copy of our IPIA approval letter is on file at the department.

[Statutory Authority: RCW 43.22.340, [43.22.]355, [43.22.]360, [43.22.]432, [43.22.]440 and [43.22.]480. 96-21-146, § 296-150M-0010, filed 10/23/96, effective 11/25/96.]

WAC 296-150M-0020 What definitions apply to this chapter? "Alteration" is the replacement, addition, modification, or removal of any equipment or installation that affects the construction, planning considerations, fire safety, or the plumbing, mechanical, and electrical systems of a manufactured home. The installation of whole-house water treatment equipment that requires cutting into the existing plumbing is considered an alteration and requires a permit, an inspection and an alteration insignia.

"Alteration insignia" is an insignia issued by the department of labor and industries to verify that an alteration to a manufactured home meets the requirements of federal law 24 CFR 3280 and this chapter.

"Anchoring system" is the means used to secure a mobile home to ground anchors or to other approved fastening devices. It may include straps, cables, turnbuckles, bolts, fasteners, and other components.

"ANSI" is the American National Standards Institute, Inc., and the institute's rules applicable to manufactured homes, ANSI A225.1 Manufactured Homes Installation, 1994 edition, except section 3.5.2 - Ground Cover and section 4.1.3.3 - Clearance.

"Authority having jurisdiction" means that either the department of labor and industries or the local jurisdiction is responsible for establishing specific manufactured home

standards. The authority for specific manufactured home standards is divided as follows:

- The department of labor and industries establishes standards for manufactured home installation and alterations and performs alteration inspections;
- The local jurisdiction establishes standards for manufactured homes governing the building site and performs installation inspections.

"Building site" is a tract, parcel, or subdivision of land on which a manufactured home is installed.

"DAPIA" is a Design Approval Primary Inspection Agency as approved by the United States Department of Housing and Urban Development.

"Department" is the department of labor and industries. The department may be referred to as "we" or "us" in this chapter. Note: You may contact us at: Department of Labor and Industries, Specialty Compliance, PO Box 44440, Olympia, WA 98504-4440.

"Design plan" is a design submitted to the department for approval of a manufactured home structural alteration. This also includes other types of work and installations (plumbing, electrical, etc.) that are incidental to the structural alteration.

"Equipment" means the appliances used in the alteration or installation of a manufactured home.

Examples of appliances that require an alteration inspection include:

- Furnace;
- Water heater;
- Air conditioner; and
- Heat pump.

Examples of appliances that do not require an alteration inspection include:

- Microwave oven;
- Washer;
- Dryer; and
- Dishwasher and range that are connected to their source of power by a plug-in cord.

"Equivalent air conditioning/heat pump components" is equipment that performs the same function and is compatible with the equipment of another manufacturer, sometimes referred to as mix and match.

"Footing" is the portion of a support system that transmits loads from the manufactured home to the ground.

"Foundation skirting" or **"skirting"** is the material that surrounds and encloses the space under the manufactured home.

"Homeowner" is an individual who owns a manufactured home. Dealers, distributors, and developers are not regarded as homeowners.

"HUD" is the United States Department of Housing and Urban Development with headquarters located in Washington, D.C.

"Indigent" means a person receiving an annual income, after taxes, of one hundred twenty-five percent or less of the most recently published federal poverty level.

"Installation" is the activity needed to prepare a building site and to set a manufactured home within that site. Site means a tract, parcel, or subdivision of land including a mobile home park.

"Installed manufactured or mobile home" is a manufactured or mobile home that has been placed on either private property or in a park and has been installed for occupancy. Installation includes the approval of the blocking of the home, and the connection of the home to all of the utilities, including water, sewer and electrical.

"IPIA" is a manufactured home production Inspection Primary Inspection Agency approved by the United States Department of Housing and Urban Development. The department of labor and industries is the IPIA for Washington state.

"Local enforcement agency" is an agency of city or county government with power to enforce local regulations governing the building site and installation of a manufactured home.

"Manufactured home" is a single-family dwelling built according to the Department of Housing and Urban Development Manufactured Home Construction and Safety Standards Act, which is a national, preemptive building code. A manufactured home also:

- Includes plumbing, heating, air conditioning, and electrical systems;
- Is built on a permanent chassis; and
- Can be transported in one or more sections with each section at least eight feet wide and forty feet long when transported; or when installed on the site is three hundred twenty square feet or greater (see RCW 46.04.302).

Note: Total square feet is based on exterior dimensions measured after installation using the longest horizontal projections. Dimensions may not include bay windows but may include projections containing interior space such as cabinets and expandable rooms.

Exception: A structure that meets the requirements of a manufactured home as set out in 24 CFR 3282.7(u), except the size requirements is considered a manufactured home, if the manufacturer files with the secretary of HUD a certificate noted in CFR 3282.13.

"Mobile home" is a factory-built dwelling built prior to June 15, 1976, to standards other than the HUD Code, and acceptable under applicable state codes in effect at the time of construction or introduction of the home into the state. Mobile homes have not been built since the introduction of the HUD Manufactured Home Construction and Safety Standards Act. For the purposes of this chapter references to manufactured homes include mobile homes.

"Park site" is the installation location of a manufactured home within a residential area for manufactured homes.

"Repair" is to restore an item to sound condition, to fix.

"Replacement" is the act or process of replacing, to substitute.

"Structural alteration-custom design" is a design that can only be used once.

"Structural alteration-master design" is a design plan that can be used more than once. The master plan expires when there is a code change applicable to the design.

"System" is part of a manufactured home designed to serve a particular function such as structural, plumbing, mechanical, or electrical functions.

[Statutory Authority: RCW 43.22.340, 43.22.400, 43.22.432, 43.22.433, 43.22.434, 43.22.480, and 43.22.485, 2002 c 268, and chapter 43.22 RCW. 03-12-044, § 296-150M-0020, filed 5/30/03, effective 5/30/03. Statutory Authority: RCW 43.22.340, 43.22.350, 43.22.432, 43.22.434, 43.22.440, and 2001 c 335. 02-03-048, § 296-150M-0020, filed 1/9/02, effective 1/9/02. Statutory Authority: RCW 43.22.340, 43.22.350, 43.22.355, 43.22.360,

43.22.400, 43.22.432, 43.22.433, 43.22.434, 43.22.450, 43.22.480, and 43.22.485. 00-17-148, § 296-150M-0020, filed 8/22/00, effective 9/30/00. Statutory Authority: RCW 43.22.340 and 43.22.480. 99-13-010, § 296-150M-0020, filed 6/4/99, effective 7/5/99. Statutory Authority: Chapter 43.22 RCW. 98-14-078, § 296-150M-0020, filed 6/30/98, effective 7/31/98. Statutory Authority: RCW 43.22.340, [43.22.]355, [43.22.]360, [43.22.]432, [43.22.]440 and [43.22.]480. 96-21-146, § 296-150M-0020, filed 10/23/96, effective 11/25/96.]

WAC 296-150M-0040 Will you keep my manufacturing information confidential? We will only release manufacturing information such as design plans for structural alterations according to the requirements of the Public Records Act (see RCW 42.17.310 (1)(h)) unless we are ordered to do so by a court or otherwise required by law.

[Statutory Authority: RCW 43.22.340 and 43.22.420. 97-16-043, § 296-150M-0040, filed 7/31/97, effective 12/1/97. Statutory Authority: RCW 43.22.340, [43.22.]355, [43.22.]360, [43.22.]432, [43.22.]440 and [43.22.]480. 96-21-146, § 296-150M-0040, filed 10/23/96, effective 11/25/96.]

WAC 296-150M-0049 What must be done prior to the sale of an installed manufactured or mobile home by a homeowner? (1) Prior to the sale of any installed manufactured or mobile home, the homeowner must:

(a) Deliver to the buyer a completed property transfer disclosure statement in accordance with chapter 64.06 RCW, unless the seller is exempt or the buyer waives his or her rights pursuant to chapter 64.06 RCW. The disclosure statement must include all the criteria specified in RCW 64.06.-020 and any variance(s) granted according to WAC 296-150M-0140. In addition, the homeowner must:

(i) Have all department insignia required by this chapter; or

(ii) Have all department insignia required by this chapter for alterations performed during ownership of the home and include in the property transfer disclosure statement all alterations that were known to have been performed by any previous owner or occupant of the home.

(b) Nothing in subsection (1) of this section shall have any effect on any written warranty(ies) required by RCW 46.70.135.

(c) Subsection (1)(a)(ii) of this section does not permit the sale of an unsafe manufactured or mobile home when the use of which may constitute a hazard to life, safety, or health.

(2) The homeowner may enter into a conditional sale of an altered manufactured or mobile home. A conditional sales agreement may be executed only if, prior to execution, the seller has complied with subsection (1) of this section. For purposes of this subsection "conditional sale" means an agreement between the seller and the purchaser which is contingent on the seller fulfilling the conditions established by the purchaser (i.e., the sale of the home is contingent on the seller ensuring that alterations performed to the manufactured or mobile home are in compliance with these rules).

(3) The homeowner may request an inspection by the department. If after the inspection the department determines that an alteration may constitute a hazard to life, safety, or health, the department must notify the homeowner in writing within thirty days of completing the inspection. The department may also notify the local official responsible for enforcing the fire code adopted under chapter 19.27 RCW and/or the local health officer.

Note: In addition to the homeowner requesting an inspection by the department, any party including the buyer and/or party financing the sale may also request an inspection. The department will conduct the inspection and if after the inspection the department determines that an alteration may constitute a hazard to life, safety, or health, the department shall notify the interested parties identified by the requesting party in writing within thirty days of completing the inspection. The department may also notify the local official responsible for enforcing the fire code adopted under chapter 19.27 RCW and/or the local health officer.

[Statutory Authority: RCW 43.22.340, 43.22.400, 43.22.432, 43.22.433, 43.22.434, 43.22.480, and 43.22.485, 2002 c 268, and chapter 43.22 RCW. 03-12-044, § 296-150M-0049, filed 5/30/03, effective 5/30/03. Statutory Authority: RCW 43.22.340, 43.22.350, 43.22.432, 43.22.434, 43.22.440, and 2001 c 335. 02-03-048, § 296-150M-0049, filed 1/9/02, effective 1/9/02.]

WAC 296-150M-0050 When can a manufactured home be posted with a prohibited sale or lease notice? (1) A manufactured home may be posted with a prohibited sale notice when:

(a) The home is being sold or offered for sale by a retailer, dealer, distributor or manufacturer and we find that the home is not an installed manufactured or mobile home per WAC 296-150M-0020 and the home has alterations without required insignia or approval; or

(b) The home is being sold or offered for sale by a homeowner and it is not an installed manufactured or mobile home per WAC 296-150M-0020.

(2) A manufactured home may be posted with a prohibited lease notice whenever the home is offered for lease by any party and we find that the home has alterations that constitute a hazard to life, safety, or health.

[Statutory Authority: RCW 43.22.340, 43.22.400, 43.22.432, 43.22.433, 43.22.434, 43.22.480, and 43.22.485, 2002 c 268, and chapter 43.22 RCW. 03-12-044, § 296-150M-0050, filed 5/30/03, effective 5/30/03. Statutory Authority: RCW 43.22.340, [43.22.]355, [43.22.]360, [43.22.]432, [43.22.]440 and [43.22.]480. 96-21-146, § 296-150M-0050, filed 10/23/96, effective 11/25/96.]

WAC 296-150M-0051 Can I sell or lease a manufactured home that has been posted with a prohibited sale or lease notice? (1) You may not sell, lease, or offer for sale a manufactured home that is posted with a prohibited sale or lease notice.

(2) A prohibited sale or lease notice shall remain posted until the code violation(s) are corrected, we inspect and approve the correction, and you pay the required fees. (See WAC 296-150M-3000.)

[Statutory Authority: RCW 43.22.340, 43.22.400, 43.22.432, 43.22.433, 43.22.434, 43.22.480, and 43.22.485, 2002 c 268, and chapter 43.22 RCW. 03-12-044, § 296-150M-0051, filed 5/30/03, effective 5/30/03.]

WAC 296-150M-0060 Who handles consumer complaints about manufactured homes? The Washington state department of community, trade and economic development (CTED), office of manufactured housing section, handles consumer complaints about manufactured homes. CTED is the state administrative agency (SAA) for the United States Department of Housing and Urban Development for the federal manufactured home program.

[Statutory Authority: RCW 43.22.340, [43.22.]355, [43.22.]360, [43.22.]432, [43.22.]440 and [43.22.]480. 96-21-146, § 296-150M-0060, filed 10/23/96, effective 11/25/96.]

WAC 296-150M-0100 What happens if I disagree with your decision regarding my compliance with the federal standards, ANSI, or this chapter? (1) If we determine that you are in violation with the federal standards, ANSI A225.1, or this chapter, you will receive a notice of noncompliance.

(2) If you disagree with our decision, you can submit a written request for a hearing, stating why you disagree.

(3) After we receive your hearing request, we will:

(a) Schedule a hearing within thirty days after we receive your request.

(b) Notify you of the time, date, and place for the hearing. If you fail to appear, your case will be dismissed.

(c) Hear your case.

(d) Send you written notice of our decision.

If you disagree with our decision, you may appeal it under the Administrative Procedure Act (chapter 34.05 RCW).

[Statutory Authority: RCW 43.22.340 and 43.22.420. 97-16-043, § 296-150M-0100, filed 7/31/97, effective 12/1/97. Statutory Authority: RCW 43.22.340, [43.22.]355, [43.22.]360, [43.22.]432, [43.22.]440 and [43.22.]480. 96-21-146, § 296-150M-0100, filed 10/23/96, effective 11/25/96.]

WAC 296-150M-0120 Where can I obtain technical assistance regarding manufactured (mobile) homes? We provide field technical service upon written request, on manufactured (mobile) homes for an hourly fee. Field technical service may include an evaluation, consultation, plan examination, interpretation, and clarification of technical data relating to the application of our rules.

[Statutory Authority: Chapter 43.22 RCW and 2003 c 291. 05-01-102, § 296-150M-0120, filed 12/14/04, effective 2/1/05. Statutory Authority: RCW 43.22.340 and 43.22.480. 99-13-010, § 296-150M-0120, filed 6/4/99, effective 7/5/99.]

WAC 296-150M-0140 Do you allow a variance from these rules for the use of alternate materials, alternate design and methods of construction? An applicant may apply to the director or designee for an order for a variance from the requirements of this chapter for alterations initiated after the expiration of any written warranty(ies) required by RCW 46.70.135 that use alternate materials, alternate design and methods of construction, by filing a written request with the department.

(1) Responsibilities of applicant. The applicant must submit the following information on a form approved by the department and pay the inspection fee in WAC 296-150M-3000.

(a) The applicant's name, address and phone number;

(b) The specific requirement or requirements from which the alternate material, alternate design or method of construction is requested;

(c) Justification why the requirements of this chapter cannot be or were not met; and

(d) How the use of alternate materials, alternate design or method of construction will achieve or has achieved a level of protection that does not constitute a hazard to life, safety or health.

Contact the department at the address shown in the definition section for a copy of the approved form.

(2) Responsibilities of the department. The department will conduct an inspection and provide a written response to the applicant within thirty days of receipt of the written request. The written response will state the acceptance or denial of the request, including the reasons for the department's decision. At a minimum the department will base its decision based on:

(a) The applicant's request as described in subsection (1) of this section;

(b) Research into the request;

(c) Expert advice.

(3) Applicant's response to denials. The applicant may appeal the department's decision by following the procedure in WAC 296-150M-0100.

[Statutory Authority: RCW 43.22.340, 43.22.350, 43.22.432, 43.22.434, 43.22.440, and 2001 c 335. 02-03-048, § 296-150M-0140, filed 1/9/02, effective 1/9/02. Statutory Authority: RCW 43.22.340, 43.22.350, 43.22.355, 43.22.360, 43.22.400, 43.22.432, 43.22.433, 43.22.434, 43.22.450, 43.22.480, and 43.22.485. 00-17-148, § 296-150M-0140, filed 8/22/00, effective 9/30/00. Statutory Authority: RCW 43.22.340 and 43.22.480. 99-13-010, § 296-150M-0140, filed 6/4/99, effective 7/5/99.]

INSIGNIA

WAC 296-150M-0200 What labels or insignia are required on my manufactured home? (1) A HUD label must be attached to the exterior of each section of a manufactured home built on or after June 15, 1976.

(2) An alteration insignia must be attached to the exterior of a manufactured home. It should be placed next to the HUD label or to the Washington state insignia.

(3) If your manufactured home does not have a HUD label or a Washington state insignia, we will attach the alteration insignia to the exterior end wall opposite the hitch end of the manufactured home. It must be placed approximately one foot above the floor line and one foot from the edge of the manufactured home.

[Statutory Authority: RCW 43.22.340, [43.22.]355, [43.22.]360, [43.22.]432, [43.22.]440 and [43.22.]480. 96-21-146, § 296-150M-0200, filed 10/23/96, effective 11/25/96.]

WAC 296-150M-0250 How do I replace a lost or damaged insignia? (1) If an alteration insignia or a Washington state insignia is lost or damaged after it is placed on a manufactured home, you should notify us in writing immediately. You should provide the following information:

(a) Your name, address, and telephone number;

(b) The name and address of the previous owner and date of approval, if you are replacing an alteration insignia that was obtained before you purchased the manufactured home;

(c) The vehicle identification number or serial number and model;

(d) The insignia or label number if available;

(e) The design plan approval number, if available; and

(f) The insignia replacement fee and any inspection fees. (See WAC 296-150M-3000.)

Note: Washington state insignia (not HUD insignia) were attached to manufactured homes prior to June 15, 1976.

(2) After we receive your notice and payment for replacing the insignia, we may inspect your manufactured home to

assure that the replacement insignia reflects compliance with your original insignia.

(3) If your home complies with your original insignia approval, we will attach a replacement alteration insignia or Washington state insignia to your manufactured home.

[Statutory Authority: RCW 43.22.340, [43.22.]355, [43.22.]360, [43.22.]432, [43.22.]440 and [43.22.]480. 96-21-146, § 296-150M-0250, filed 10/23/96, effective 11/25/96.]

WAC 296-150M-0260 Who do I contact for replacement HUD labels? The HUD labels have been removed from my home. I can't sell/refinance my home without the HUD label.

You must contact the Department of Housing and Urban Development (HUD). HUD does not reissue labels for manufactured homes. However, HUD can issue a letter verifying a label for the unit for which it can locate the necessary historical information. The label numbers can be found on a data plate inside the home in one of three locations:

- On or near the main electrical panel;
- In a kitchen cabinet; or
- In a bedroom closet.

The data plate has a map of the United States to let the consumer know the land zone and snow load for which their home was built. You can use the following information to request label verification:

Office of Manufactured Housing
Fax: 202-708-4213
E-mail: mhs@hud.gov
Phone: 202-708-6423.

[Statutory Authority: Chapter 43.22 RCW and 2003 c 291. 05-01-102, § 296-150M-0260, filed 12/14/04, effective 2/1/05. Statutory Authority: RCW 43.22.340, [43.22.]355, [43.22.]360, [43.22.]432, [43.22.]440 and [43.22.]480. 96-21-146, § 296-150M-0260, filed 10/23/96, effective 11/25/96.]

ALTERATIONS AND INSPECTIONS

ALTERATION APPROVAL

WAC 296-150M-0300 What approval do I need to alter a manufactured home? If you alter a manufactured home in Washington state, you must obtain our approval prior to making an alteration. This includes:

(1) Alterations made by an owner, or contractor; and

(2) Alterations made by a dealer after a manufactured home is sold.

[Statutory Authority: RCW 43.22.340, [43.22.]355, [43.22.]360, [43.22.]432, [43.22.]440 and [43.22.]480. 96-21-146, § 296-150M-0300, filed 10/23/96, effective 11/25/96.]

WAC 296-150M-0302 What are some examples of work to manufactured or mobile homes that either require or do not require a permit and inspection?

TYPE OF WORK	ALTERATION PERMIT AND INSPECTION REQUIRED? Yes	No
(1) **Air Conditioner/Heat Pump**		
(a) New installation	X	
(b) Replacement	X	
(c) Reconnection after moving home	X	
(d) Repair		X
(e) Adjustment and/or maintenance		X
(2) **Bottom Board** - Repair		X
(3) **Clothes Washer**		
(a) New installation		X
(b) Replacement		X
(c) Repair with approved parts		X
(d) Adjustment and/or maintenance		X
(4) **Clothes Dryer** (Electric)		
(a) New installation (Prewired electrical)		X
(b) Replacement		X
(c) Repair with approved parts		X
(d) Adjustment and/or maintenance		X
(e) Replacement with gas clothes dryer when modifications to electrical or gas systems are performed	X	
(5) **Clothes Dryer** (Gas)		
(a) New installation (Preplumbed gas)		X
(b) Replacement		X
(c) Repair with approved parts		X
(d) Adjustment and/or maintenance		X
(e) Replacement with electric clothes dryer when modifications to electrical or gas systems are performed	X	
(6) **Dishwasher**		
(a) New installation	X	
(b) Replacement		
(i) Cord connected		X
(ii) Direct wired	X	
(c) Repair		X
(d) Adjustment and/or maintenance		X
(7) **Doors** (Interior and Exterior)		
(a) Additional*	X	
(b) Replacement of door that fits into the same opening		X
(8) **Electrical**		
(a) Replacing main electrical panel	X	
(b) Adding circuits	X	
(c) Extending existing circuit(s)	X	
(d) Replacing lighting fixtures****		X
(e) Replacing circuit breakers/fuses		X
(f) Replacing switches, receptacles, light bulbs, fluorescent tubes and glass or plastic shades		X
(g) Repairing bath exhaust fans		X
(h) Repairing fans in kitchen range hoods		X
(9) **Exterior Finish**		
(a) Painting		X
(b) Replacement of siding	X	
(10) **Furnace** (Electric)		
(a) New installation	X	
(b) Replacement	X	
(c) Repair		X
(d) Adjustment and/or maintenance		X
(e) Replacement with gas furnace	X	
(11) **Furnace** (Gas)		
(a) New installation	X	
(b) Replacement	X	
(c) Repair		X
(d) Change from LP Gas to Natural Gas or from Natural Gas to LP gas per its listing		X
(e) Adjustment and/or maintenance		X
(f) Replacement with electric furnace	X	

TYPE OF WORK	ALTERATION PERMIT AND INSPECTION REQUIRED? Yes	No
(12) **Gas Lines**		
(a) New installation	X	
(b) Extend existing gas line	X	
(c) Repair	X	
(13) **Interior**		
(a) Painting, wall papering and similar finish work		X
(b) Replacement or addition of curtains, drapes, blinds, window shades and other window coverings		X
(c) Replacement of carpeting and other floor-covering materials with similar materials		X
(14) **Microwave Oven** (Over range)		
(a) New installation when electrical system modifications are performed	X	
(b) Replacement		X
(c) Repair		X
(d) Adjustment and/or maintenance		X
(15) **Microwave Oven** (Countertop)		X
(16) **Pellet Stove**		
(a) New installation	X	
(b) Replacement	X	
(c) Repair		X
(d) Adjustment and/or maintenance		X
(17) **Plumbing**		
(a) Adding plumbing fixtures***	X	
(b) Repairing damage***	X	
(c) Replacing fixtures***		X
(d) Repairing fixtures***		X
(e) Replacement/repair of shower doors and curtains		X
(18) **Range/Cook Top/Eye Level Oven** (Electric)		
(a) Replacement		
(i) Cord connected		X
(ii) Direct wired	X	
(b) Repair with approved parts		X
(c) Adjustment and/or maintenance		X
(d) Replacement with gas appliance(s)	X	
(19) **Range/Cook Top/Eye Level Oven** (Gas)		
(a) New installation	X	
(b) Replacement		X
(c) Repair with approved parts		X
(d) Adjustment and/or maintenance		X
(e) Replacement with electric appliance(s)	X	
(20) **Roofing**		
(a) Reroofing	X	
(b) Applying liquid or mastic roof sealant to a metal roof		X
(c) Repair of damaged composition shingles		X
(21) **Structural changes**		
(a) Adding a dormer*	X	
(b) Truss repairs*	X	
(c) Add opening in wall**	X	
(d) Add gypsum board to walls or ceilings	X	
(e) Repair or replacing floor decking/joists	X	
(22) **Water Heater** (Electric)		
(a) Replacement w/electric water heater	X	
(b) Repair		X
(c) Adjustment and/or maintenance		X

TYPE OF WORK	ALTERATION PERMIT AND INSPECTION REQUIRED? Yes	No
(d) Replacement with gas water heater	X	
(23) **Water Heater** (Gas)		
(a) Replacement w/gas water heater	X	
(b) Repair		X
(c) Change from LP gas to Natural Gas or from Natural Gas to LP gas per its listing		X
(d) Adjustment and/or maintenance		X
(e) Replacement with electric water heater	X	
(24) **Windows**		
(a) Replacement is same opening with no structural changes*****		X
(b) Replacement when structural changes are required	X	
(c) Replacement of glass		X
(25) **Wood Stove/Fireplace**		
(a) New installation	X	
(b) Replacement	X	
(c) Repair		X
(d) Adjustment and/or maintenance		X

* May also require a plan review. Please contact your local L&I representative.

** May also require a plan review. The department has detailed drawings you may use for openings in sidewalls. Please contact your local L&I representative.

*** Fixtures include: Faucets, sinks, lavatories, laundry tubs, water closets (toilets), tubs, showers and tub/shower combos.

**** Fixtures must be installed per its listing and intended use.

***** Windows in bedrooms must be of egress type.

NOTE: Exemption from the permit and inspection requirements shall not be deemed to grant authorization for any work to be done in violation of the applicable code, Chapter 296-150M WAC.

[Statutory Authority: Chapter 43.22 RCW and 2003 c 291. 05-01-102, § 296-150M-0302, filed 12/14/04, effective 2/1/05. Statutory Authority: RCW 43.22.340, 43.22.400, 43.22.432, 43.22.433, 43.22.434, 43.22.480, and 43.22.485, 2002 c 268, and chapter 43.22 RCW. 03-12-044, § 296-150M-0302, filed 5/30/03, effective 5/30/03. Statutory Authority: RCW 43.22.340, 43.22.350, 43.22.432, 43.22.434, 43.22.440, and 2001 c 335. 02-03-048, § 296-150M-0302, filed 1/9/02, effective 1/9/02.]

WAC 296-150M-0306 What codes are used when altering a manufactured (mobile) home? Alterations to a manufactured (mobile) home must be in compliance with the Manufactured Home Construction and Safety Standards, 24 CFR Part 3280, as adopted by the Secretary for the Department of Housing and Urban Development (HUD) and the amendments to that federal standard adopted in this WAC chapter. The department will accept the following provisions, which supersede the applicable requirements in 24 CFR Part 3280.

(1) Tested equivalent air conditioning/heat pump components that have been tested and listed for use with a particular furnace by a nationally recognized testing laboratory.

(2) Pellet stoves for installation that have been listed by a department approved testing laboratory. For a current list of approved laboratories, contact any department field office or the department at the address shown in WAC 296-150M-0020.

Note: The replacement of exterior siding is an alteration and requires the approval of the department and an alteration insignia.

[Statutory Authority: RCW 43.22.340, 43.22.350, 43.22.355, 43.22.360, 43.22.400, 43.22.432, 43.22.433, 43.22.434, 43.22.450, 43.22.480, and 43.22.485. 00-17-148, § 296-150M-0306, filed 8/22/00, effective 9/30/00. Statutory Authority: RCW 43.22.340 and 43.22.480. 99-13-010, § 296-150M-0306, filed 6/4/99, effective 7/5/99. Statutory Authority: Chapter 43.22 RCW. 98-14-078, § 296-150M-0306, filed 6/30/98, effective 7/31/98.]

WAC 296-150M-0307 How may I obtain a copy of the Manufactured Home Construction and Safety Standards, Part 24, CFR 3280? Copies of the federal standard may be obtained by writing to:

Director
Manufactured Housing Standards Division
Department of Housing and Urban Development
451 Seventh Street Southwest
Washington, D.C. 20410

[Statutory Authority: Chapter 43.22 RCW. 98-14-078, § 296-150M-0307, filed 6/30/98, effective 7/31/98.]

WAC 296-150M-0309 How do I apply for alteration approval and obtain an alteration insignia? (1) To apply for alteration approval and the alteration insignia, you must:

(a) Complete an alteration permit form and an application for alteration insignia. We will provide the forms upon request.

(b) Submit the completed forms to us, with the first hour of inspection fee and alteration insignia fee. Alterations requiring more than one inspection shall have the first hour inspection fee paid to the department prior to any inspection. (See WAC 296-150M-3000.)

(2) Request inspection of your alteration at least five days before the date you want the inspection.

(3) Once we approve your alteration, we will attach the alteration insignia to your manufactured home.

Note: Specifications, engineering data, and test results should be available for our inspector. If applicable, your approved design plan must also be available during the inspection.

[Statutory Authority: RCW 43.22.340 and 43.22.480. 99-13-010, § 296-150M-0309, filed 6/4/99, effective 7/5/99.]

WAC 296-150M-0310 What happens if I fail to get your approval prior to altering a manufactured home? If you alter a manufactured home without getting our approval and an alteration insignia, your manufactured (mobile) home must meet the requirements of WAC 296-150M-0049.

[Statutory Authority: Chapter 43.22 RCW and 2003 c 291. 05-01-102, § 296-150M-0310, filed 12/14/04, effective 2/1/05. Statutory Authority: Chapter 43.22 RCW. 98-14-078, § 296-150M-0310, filed 6/30/98, effective 7/31/98. Statutory Authority: RCW 43.22.340, [43.22.]355, [43.22.]360, [43.22.]432, [43.22.]440 and [43.22.]480. 96-21-146, § 296-150M-0310, filed 10/23/96, effective 11/25/96.]

WAC 296-150M-0320 What must I provide to request approval of an alteration? (1) For approval of an alteration, you must complete and return our alteration permit application form. The application must contain:

(a) A description of the proposed alteration(s);

(b) Applicable specifications, engineering data, test procedures and results; and

(c) Payment of the alteration permit fee, alteration insignia fee, and any inspection fees. (See WAC 296-150M-3000.)

Note: The department may waive alteration permit fees for indigent permit applicants. (See WAC 296-150M-0322.)

(2) For approval of a structural alteration, we must approve the design plan. This is in addition to the requirements stated in subsection (1) of this section. (See WAC 296-150M-0370.)

[Statutory Authority: RCW 43.22.340, 43.22.400, 43.22.432, 43.22.433, 43.22.434, 43.22.480, and 43.22.485, 2002 c 268, and chapter 43.22 RCW. 03-12-044, § 296-150M-0320, filed 5/30/03, effective 5/30/03. Statutory Authority: RCW 43.22.340, [43.22.]355, [43.22.]360, [43.22.]432, [43.22.]440 and [43.22.]480. 96-21-146, § 296-150M-0320, filed 10/23/96, effective 11/25/96.]

WAC 296-150M-0322 Data requirements for the identification of indigent persons. (1) Any one of the following documents shall be considered sufficient evidence upon which to base the final determination of indigent status, when the income information is annualized as may be appropriate:

(a) A "W-2" withholding statement from all employers for the previous year;

(b) Pay stubs from all employers for the previous year;

(c) An income tax return from the most recently filed calendar year;

(d) Forms approving or denying eligibility for Medicaid and/or state-funded medical assistance;

(e) Forms approving or denying unemployment compensation; or

(f) Written statements from all employers for the previous year or welfare agencies.

(2) In the event that the responsible party is not able to provide any of the documentation described above, the department shall rely upon written and signed declarations under penalty of perjury from the responsible party for making a final determination of eligibility for classification as an indigent person.

(3) Information requests, from the department to the responsible party, for the verification of income and family size shall be limited to that which is reasonably necessary to substantiate the responsible party's qualification for indigent status, and may not be used to discourage applications for such status. Only those facts relevant to eligibility may be verified.

[Statutory Authority: RCW 43.22.340, 43.22.400, 43.22.432, 43.22.433, 43.22.434, 43.22.480, and 43.22.485, 2002 c 268, and chapter 43.22 RCW. 03-12-044, § 296-150M-0322, filed 5/30/03, effective 5/30/03.]

WAC 296-150M-0330 How do I obtain alteration insignia information and the forms you require? Upon request, we will provide you with the forms and the fee schedules needed to obtain an alteration insignia or you can contact any department of labor and industries office for the forms. Our address is noted in the definition of department.

[Statutory Authority: RCW 43.22.340, [43.22.]355, [43.22.]360, [43.22.]432, [43.22.]440 and [43.22.]480. 96-21-146, § 296-150M-0330, filed 10/23/96, effective 11/25/96.]

WAC 296-150M-0331 Does my alteration permit expire? Yes, your alteration permit will expire one year after the date of purchase. Alteration permits purchased prior to January 1, 1998, will expire on December 31, 1998. Alter-

ation permits purchased after January 1, 1998, will expire one year after the date of purchase.

[Statutory Authority: Chapter 43.22 RCW. 98-14-078, § 296-150M-0331, filed 6/30/98, effective 7/31/98.]

WAC 296-150M-0340 What must an engineering analysis for design plans include? (1) The engineering analysis must show that the structural design meets the requirements of this chapter.

(2) An engineering analysis must be conducted according to accepted engineering practices and must be signed by a professional engineer or architect licensed in Washington or by a DAPIA who approved the original design plan.

[Statutory Authority: RCW 43.22.340, [43.22.]355, [43.22.]360, [43.22.]432, [43.22.]440 and [43.22.]480. 96-21-146, § 296-150M-0340, filed 10/23/96, effective 11/25/96.]

WAC 296-150M-0350 What must the test procedures and results for design plans include? (1) Tests to an alteration design must be performed and evaluated by a professional engineer or architect licensed in Washington or by a DAPIA who approved the original design plan.

(2) Test reports must contain the following items:

(a) A description of the methods or standards that applied to the test;

(b) Drawings and a description of the item tested;

(c) A description of the test set-up;

(d) The procedure used to verify the correct load;

(e) The procedure used to measure each condition;

(f) Test data, including applicable graphs and observations of the characteristics and behavior of the item tested;

(g) Engineering data; and

(h) Analysis, comments, and conclusion.

(3) The written test procedures, results, and conclusions must reference the applicable structural alteration design plan.

[Statutory Authority: RCW 43.22.340, [43.22.]355, [43.22.]360, [43.22.]432, [43.22.]440 and [43.22.]480. 96-21-146, § 296-150M-0350, filed 10/23/96, effective 11/25/96.]

WAC 296-150M-0360 When is design plan approval required for an alteration? (1) Design plan approval is required when you make a structural alteration to your manufactured home.

(2) A structural alteration is a change to the body or frame of a manufactured home. For example:

(a) An alteration is made if you change the size of a room or the pitch of a roof on your manufactured home.

(b) Any addition such as a carport that adds structural load to the manufactured home and is not fully self-supporting is an alteration.

(c) Alterations or installations of other types of work (plumbing, electrical, etc.) that are incidental to the structural alteration.

[Statutory Authority: RCW 43.22.340, 43.22.400, 43.22.432, 43.22.433, 43.22.434, 43.22.480, and 43.22.485, 2002 c 268, and chapter 43.22 RCW. 03-12-044, § 296-150M-0360, filed 5/30/03, effective 5/30/03. Statutory Authority: RCW 43.22.340, [43.22.]355, [43.22.]360, [43.22.]432, [43.22.]440 and [43.22.]480. 96-21-146, § 296-150M-0360, filed 10/23/96, effective 11/25/96.]

WAC 296-150M-0370 How do I obtain alteration design plan approval? (1) You must have your design plan approved by:

(a) A Design Approval Primary Inspection Agency (DAPIA), if they approved the initial design plan; or

(b) A professional engineer or architect who is licensed in Washington state.

(2) You must submit two copies of your alteration design plan with the appropriate fee to us for review and approval. (See WAC 296-150M-3000.)

[Statutory Authority: RCW 43.22.340, [43.22.]355, [43.22.]360, [43.22.]432, [43.22.]440 and [43.22.]480. 96-21-146, § 296-150M-0370, filed 10/23/96, effective 11/25/96.]

WAC 296-150M-0380 How will I know whether you have approved my design plan? (1) Your design plan will be approved if it meets the requirements of this chapter and federal standards in 24 CFR 3280.

(2) We will send you an approved copy of your design plan with the plan approval number.

(3) If your design plan is not approved, you will be notified in writing of plan deficiencies. You may send a corrected design plan to us. (See WAC 296-150M-3000.)

[Statutory Authority: RCW 43.22.340, [43.22.]355, [43.22.]360, [43.22.]432, [43.22.]440 and [43.22.]480. 96-21-146, § 296-150M-0380, filed 10/23/96, effective 11/25/96.]

WAC 296-150M-0390 If my design plan is not approved, how much time do I have to submit a corrected plan? (1) You have ninety days to correct and resubmit your original design plan and send us the resubmittal fee after we notify you of plan deficiencies. After ninety days, your initial design plan is returned to you.

(2) If you submit your corrected design plan after ninety days, you must send the initial design plan fee instead of the resubmittal fee. (See WAC 296-150M-3000.)

[Statutory Authority: RCW 43.22.340, [43.22.]355, [43.22.]360, [43.22.]432, [43.22.]440 and [43.22.]480. 96-21-146, § 296-150M-0390, filed 10/23/96, effective 11/25/96.]

INSPECTION

WAC 296-150M-0500 When must an inspection be requested? (1) You must request an inspection by us, if you are altering a manufactured home.

(2) You must request an inspection by the local enforcement agency, for manufactured home installations.

(3) The installation of manufactured homes must be enforced and fees charged by the counties and cities in the same manner the State Building Code is enforced under RCW 19.27.050.

[Statutory Authority: RCW 43.22.340, [43.22.]355, [43.22.]360, [43.22.]432, [43.22.]440 and [43.22.]480. 96-21-146, § 296-150M-0500, filed 10/23/96, effective 11/25/96.]

WAC 296-150M-0530 Am I charged if I request an inspection but am not prepared when you arrive? If you ask us to inspect your manufactured home or your alteration, but you are not prepared when we arrive, you must pay the minimum inspection fee. (See WAC 296-150M-3000.)

[Statutory Authority: RCW 43.22.340, [43.22.]355, [43.22.]360, [43.22.]432, [43.22.]440 and [43.22.]480. 96-21-146, § 296-150M-0530, filed 10/23/96, effective 11/25/96.]

INSTALLATION REQUIREMENTS

INSTALLATION, PERMIT, INSPECTION, DISPUTE

WAC 296-150M-0600 Who establishes standards for installation of manufactured homes? (1) The director of labor and industries is responsible for establishing uniform installation standards where possible and practical for persons or entities engaged in performing the installation of manufactured homes within the state.

(2) Local jurisdictions may adopt additional installation requirements only for those installation situations not covered by federal standards. For example, local jurisdictions may impose noise control construction ordinances, prescribe the frost depth and soil bearing capacity at the installation site, and adopt requirements to protect manufactured homes in hazardous areas, (see WAC 296-150M-0620).

Also, local jurisdictions may impose their requirements for snow and wind loads as long as all structures within their jurisdiction are required to comply with the same standard and provided those installing the manufactured home are given options in satisfying that standard. Such an option might include, but not be limited to, allowing an installer to erect an additional structure, which meets local standards, and protects the manufactured home. For example, an installer could erect a free standing ramada over a manufactured home to protect it from local snow loads.

Local jurisdictions **may not:**

(a) Dictate foundation design and construction which is built according to either the manufacturer's installation instructions or a design created by an engineer or architect licensed in Washington state.

(b) Impose regulations on smoke detectors because they are regulated by federal standards.

[Statutory Authority: RCW 43.22.340 and 43.22.480. 99-13-010, § 296-150M-0600, filed 6/4/99, effective 7/5/99. Statutory Authority: Chapter 43.22 RCW. 98-14-078, § 296-150M-0600, filed 6/30/98, effective 7/31/98. Statutory Authority: RCW 43.22.340, [43.22.]355, [43.22.]360, [43.22.]432, [43.22.]440 and [43.22.]480. 96-21-146, § 296-150M-0600, filed 10/23/96, effective 11/25/96.]

WAC 296-150M-0610 What instructions are used for a manufactured home installation? To the extent that the installation of a manufactured home is not covered by a manufacturer's, engineer's or architect's instructions, the manufactured home shall comply with the installation requirements of this section.

(1) Installation of a new manufactured home.

(a) The initial manufactured home installation must be conducted according to the manufacturer's instructions.

(b) If the manufacturer's instructions do not address an aspect of the installation, you may request:

(i) Specific instructions from the manufacturer; or

(ii) Specific instructions from a professional engineer or architect licensed in Washington state.

For example:

(A) A manufactured home is installed over a basement and the manufacturer's instructions do not address this application;

(B) A manufactured home is installed on a site where the specific soil bearing capacity is not addressed in the manufacturer's instructions.

(c) All manufactured homes installed in Washington state must be permanently anchored except for those installed on dealer lots. On dealer lots, temporary sets are permitted without anchoring being installed. A manufactured home must be anchored according to the manufacturer's installation instructions or according to the design of a professional engineer or architect licensed in Washington state. Local jurisdictions **may not** prescribe anchoring methods.

(d) A manufactured home must have a skirting around its entire perimeter. It must be installed per the manufacturer's installation instructions or if the manufacturer is not specific, to the standards in this section. It must be vented and allow access to the under floor area per the manufacturer's installation instructions or per the standards below if the manufacturer's instructions are not available.

If the manufacturer's skirting and access instructions are not specific, skirting, ventilation and access shall be installed as follows:

(i) Skirting:

- Skirting must be made of materials suitable for ground contact.
- Metal fasteners must be made of galvanized, stainless steel or other corrosion resistant material.
- Ferrous metal members in contact with the earth, except those made of galvanized or stainless steel, must be coated with an asphaltic emulsion.
- Skirting must not trap water between the skirting and siding or trim.
- All skirting must be recessed behind the siding or trim.

(ii) Ventilation:

For homes sited in a flood plain, contact the local jurisdiction regarding proper skirting ventilation. Except for those manufactured homes sited in a flood plain, all skirting must be vented as follows:

- Vent openings must be covered with corrosion-resistant wire mesh to prevent the entrance of rodents. The size of the mesh opening cannot exceed 1/4 inch.
- Vent openings must have a net area of not less than one square foot for each one hundred fifty square feet of under floor area.
- Vent openings must be located as close to corners and high as practical and they must provide cross ventilation on at least two opposite sides.

(iii) Access:

- Access to the under floor area of a manufactured home must have a finished opening at least eighteen inches by twenty-four inches in size.
- The access opening must be located so that all areas under a manufactured home are available for inspection.
- The access opening must be covered and that cover must be made of metal, pressure treated wood or vinyl.

(e) A manufactured home site must be prepared per the manufacturer's installation manual or per ANSI A225.1, 1994 edition, section 3.

(f) Heat duct crossovers must be installed per the manufacturer's installation instruction manual or per ANSI A225.1 or the following instructions if the manufacturer's instructions are not available:

Heat duct crossovers must be supported at least one inch above the ground by strapping or blocking. They must be installed to avoid standing water. Also, they must be installed to prevent compression, sharp bends and to minimize stress at the connections.

(g) Dryer vents must exhaust to the exterior side of the wall or skirting. Dryer ducts outside the manufactured home shall comply with the dryer manufacturer's specifications or shall be made of metal with smooth interior surfaces.

(h) Hot water tank pressure relief lines must exhaust to the exterior side of the exterior wall or skirting and must exhaust downward. The end of the pipe must be at least six inches but not more than two feet above the ground.

(i) Water piping must be protected against freezing as per the manufacturer's installation instructions or by use of a heat tape listed for use with manufactured homes and installed per the heat tape manufacturer's installation instructions.

(j) The testing of water lines, waste lines, gas lines and electrical systems must be as per the manufacturer's installation instructions. If the manufacturer's installation instructions require testing of any of these systems, the local jurisdiction is responsible for verifying that the tests have been performed and passed. Electrical connections and testing are the responsibility of the electrical section of labor and industries except where a city has assumed the electrical inspection responsibilities for their jurisdiction. In that case, the city's electrical inspectors are responsible for the electrical connections and testing.

(k) During the installation process, a ground cover must be installed under all manufactured homes. The ground cover must be a minimum of six-mil *black* polyethylene sheeting or its equivalent (exception to ANSI A225.1 (3.5.2)). The ground cover may be omitted if the under floor area of the home has a concrete slab floor with a minimum thickness of three and one-half inches.

(l) Clearances underneath manufactured homes must be maintained at a minimum of eighteen inches beneath at least seventy-five percent of the lowest member of the main frame (I-beam or channel beam) and the ground or footing. No more than twenty-five percent of the lowest member of the main frame of the home shall be less than eighteen inches above the ground or footing. **In no case** shall clearance be less than twelve inches **anywhere** under the home (exception to ANSI A225.1 (4.1.3.3)).

(m) Heat pump and air conditioning condensation lines must be extended to the exterior of the manufactured home.

(2) Installation of a relocated manufactured (mobile) home.

(a) A relocated manufactured home installation should be conducted according to the manufacturer's installation instructions.

(b) If the manufacturer's instructions are unavailable, you may use either:

(i) The American National Standard Institute (ANSI) standard ANSI A225.1-Manufactured Homes Installation, 1994 edition instructions; or

(ii) The instructions of a professional engineer or architect licensed in Washington state.

(c) If either (b)(i) or (ii) is used, all of the requirements of WAC 296-150M-0610 (1)(c) through (m) must also be followed.

[Statutory Authority: RCW 43.22.340 and 43.22.480. 99-13-010, § 296-150M-0610, filed 6/4/99, effective 7/5/99. Statutory Authority: Chapter 43.22 RCW. 98-14-078, § 296-150M-0610, filed 6/30/98, effective 7/31/98. Statutory Authority: RCW 43.22.340, [43.22.]355, [43.22.]360, [43.22.]432, [43.22.]440 and [43.22.]480. 96-21-146, § 296-150M-0610, filed 10/23/96, effective 11/25/96.]

WAC 296-150M-0614 How may I obtain a copy of the American National Standards Institute (ANSI) A225.1-Manufactured Homes Installation? Copies of the standard are available from:

National Fire Protection Agency
Item Number: ANSIA2251
Phone: 800-344-3555
Address: 1 Batterymatch Park
P.O. Box 9101
Quincy, MA 02269-9101

[Statutory Authority: Chapter 43.22 RCW and 2003 c 291. 05-01-102, § 296-150M-0614, filed 12/14/04, effective 2/1/05. Statutory Authority: RCW 43.22.340 and 43.22.480. 99-13-010, § 296-150M-0614, filed 6/4/99, effective 7/5/99.]

WAC 296-150M-0615 What are the requirements for temporary placement of manufactured (mobile) homes? Manufactured (mobile) homes placed on temporary display or in storage by a manufacturer, dealer or distributor in excess of thirty days shall be:

(1) Supported under each main frame beam by supports located within two feet of each end and within four feet of the front and rear axle and other supports so that no span shall exceed sixteen feet; and

(2) Made weathertight at any marriage line joint at the roof and wall lines.

[Statutory Authority: RCW 43.22.340 and 43.22.480. 99-13-010, § 296-150M-0615, filed 6/4/99, effective 7/5/99.]

WAC 296-150M-0620 Do local enforcement agencies have special requirements for installing manufactured homes in hazardous areas? (1) Local enforcement agencies may have special installation requirements for manufactured homes installed in hazardous areas.

(2) A hazardous area is:

(a) An area recognized as a flood plain by the local jurisdiction; or

(b) An area considered hazardous due to the probability of earthquake. In such areas, local jurisdictions may require an earthquake resistant bracing system designed for the earthquake zone in which the home is located by the home manufacturer or by a registered professional engineer or architect.

[Statutory Authority: Chapter 43.22 RCW. 98-14-078, § 296-150M-0620, filed 6/30/98, effective 7/31/98. Statutory Authority: RCW 43.22.340, [43.22.]355, [43.22.]360, [43.22.]432, [43.22.]440 and [43.22.]480. 96-21-146, § 296-150M-0620, filed 10/23/96, effective 11/25/96.]

WAC 296-150M-0630 Who may install a manufactured home? (1) A manufactured home may be installed by:

- A homeowner;
- A certified installer;
- An individual who is supervised by an on-site certified installer; or
- A specialty trades person, for certain aspects of installation.

(2) A certified installer must be a registered contractor or his or her employee, or an employee of a registered dealership. (See chapter 43.63B RCW for details to which aspects of installation require the presence of a certified installer.)

[Statutory Authority: RCW 43.22.340, [43.22.]355, [43.22.]360, [43.22.]432, [43.22.]440 and [43.22.]480. 96-21-146, § 296-150M-0630, filed 10/23/96, effective 11/25/96.]

WAC 296-150M-0640 Does a person who installs a manufactured home need an installation permit? (1) A dealer, owner or agent must not deliver a manufactured home to its site without verifying that an installation permit has been obtained; and

(2) Any permit fees set by the local enforcement agency must be paid in full and included with the permit application.

[Statutory Authority: RCW 43.22.340 and 43.22.480. 99-13-010, § 296-150M-0640, filed 6/4/99, effective 7/5/99. Statutory Authority: Chapter 43.22 RCW. 98-14-078, § 296-150M-0640, filed 6/30/98, effective 7/31/98. Statutory Authority: RCW 43.22.340, [43.22.]355, [43.22.]360, [43.22.]432, [43.22.]440 and [43.22.]480. 96-21-146, § 296-150M-0640, filed 10/23/96, effective 11/25/96.]

WAC 296-150M-0650 Does a manufactured home installation require an inspection? All manufactured home installations must be inspected and approved by the local enforcement agency.

[Statutory Authority: RCW 43.22.340, [43.22.]355, [43.22.]360, [43.22.]432, [43.22.]440 and [43.22.]480. 96-21-146, § 296-150M-0650, filed 10/23/96, effective 11/25/96.]

WAC 296-150M-0655 How does the local enforcement agency gain access to the manufacturer's installation instructions? A manufacturer's installation manual shall be provided for the inspecting jurisdiction whenever any portions of the manufacturer's installation instructions have been used for any portion of the installation.

(1) The installation instructions shall be located between the I-beam and the bottom board within five feet of the main electrical feeder when the skirting has not been installed.

(2) When the skirting has been installed, the installation instructions shall be located between the I-beam and the bottom board within five feet of the access opening.

(3) Instructions shall be returned to such location when the inspection is completed.

[Statutory Authority: RCW 43.22.340 and 43.22.480. 99-13-010, § 296-150M-0655, filed 6/4/99, effective 7/5/99.]

WAC 296-150M-0660 What are the requirements for on-site structures and who regulates them? On-site structures, sometimes referred to as auxiliary structures, such as, but not limited to, carports, decks and steps should be self-supporting.

(1) Local enforcement agency jurisdiction.

(a) On-site self-supporting structures that do not use any of the systems in the manufactured home are inspected by the local enforcement agency and they should be contacted for specific on-site structure requirements.

(b) Awnings and carports that are self-supported by a beam next to a manufactured (mobile) home are inspected by the local enforcement agency. Note: The awning or carport may be flashed to the manufactured (mobile) home.

(2) Department of labor and industries jurisdiction.

(a) On-site structures that are not self-supporting or use one or more of the systems of the manufactured home require an inspection by us and by the local enforcement agency.

(b) Awnings and carports that are attached to the manufactured (mobile) home without the benefit of a self-supported beam require approval and inspection by the department. Note: This attachment must be designed and approved by an engineer or an architect licensed in Washington state. Furthermore, these stamped plans must be submitted to the department and approved before an inspection can be conducted.

(c) Attached garages:

(i) If the manufactured (mobile) home is built "garage ready" (one hour fire wall, dormer, etc.) at the factory **and** is installed by the manufacturer, an alteration inspection may not be required.

(ii) If the manufactured (mobile) home is not built "garage ready" at the factory, an alteration inspection is required for all changes made to it.

[Statutory Authority: Chapter 43.22 RCW. 98-14-078, § 296-150M-0660, filed 6/30/98, effective 7/31/98. Statutory Authority: RCW 43.22.340, [43.22.]355, [43.22.]360, [43.22.]432, [43.22.]440 and [43.22.]480. 96-21-146, § 296-150M-0660, filed 10/23/96, effective 11/25/96.]

WAC 296-150M-0670 What happens if a dispute arises concerning an installation requirement? (1) If a dispute arises between any person, business, or local enforcement agency concerning an installation requirement of ANSI A225.1 or this chapter, the issue may be submitted to the factory assembled structures advisory (FAS) board.

(2) The board may provide an opinion on the requirement.

[Statutory Authority: RCW 43.22.340, [43.22.]355, [43.22.]360, [43.22.]432, [43.22.]440 and [43.22.]480. 96-21-146, § 296-150M-0670, filed 10/23/96, effective 11/25/96.]

AUDIT

WAC 296-150M-0705 Definitions applicable to this part. "Audit" means an assessment, evaluation, examination or investigation of a contractor's accounts, books and records for the purpose of verifying the contractor's compliance with RCW 43.22.360 through 43.23.390 requiring permits for alterations to manufactured and mobile homes.

"Records" include, but are not limited to, all bids, invoices, billing receipts which show that the work was performed on a manufactured/mobile home, permits purchased from labor and industries for alterations to manufactured/mobile homes, purchases of materials and payroll records.

[Statutory Authority: RCW 43.22.340, 43.22.400, 43.22.432, 43.22.433, 43.22.434, 43.22.480, and 43.22.485, 2002 c 268, and chapter 43.22 RCW. 03-12-044, § 296-150M-0705, filed 5/30/03, effective 5/30/03.]

WAC 296-150M-0715 May the department audit the records of a contractor? Yes, based on RCW 43.22.434 the department may audit the records of contractors as defined in chapter 18.27, 18.106, or 19.28 RCW when the department has reason to believe that a violation of the permitting requirements has occurred.

[Statutory Authority: RCW 43.22.340, 43.22.400, 43.22.432, 43.22.433, 43.22.434, 43.22.480, and 43.22.485, 2002 c 268, and chapter 43.22 RCW. 03-12-044, § 296-150M-0715, filed 5/30/03, effective 5/30/03.]

WAC 296-150M-0725 What procedures will the department follow when auditing the records of construction, plumbing and electrical contractors? The department will follow the following procedures when auditing:

(1) The time period covered by the audit may be less than one year but will not exceed three years from the date of notification of an audit.

(2) Every construction, plumbing and electrical contractor must keep records of jobs performed for at least the time frames specified in subsection (1) of this section. Upon the request of the director's authorized representative, these records must be made available to the department for inspection within seven business days.

(3) The department's audits may include, but may not be limited to, the following:

(a) An audit to determine if the contractor performed work on a manufactured or mobile home without procuring the proper permit;

(b) An audit to determine if the contractor failed to correct within twenty days any violations noted on an alteration permit; and

(c) An audit covering a specific time period and examining a contractor's records, which may include billing information, location of where the work was performed, type of work performed, for whom the work was performed, etc.

(4) Any information obtained as a result of an audit under provisions of RCW 43.22.434 is confidential and is not open to public inspection under chapter 42.17 RCW.

[Statutory Authority: RCW 43.22.340, 43.22.400, 43.22.432, 43.22.433, 43.22.434, 43.22.480, and 43.22.485, 2002 c 268, and chapter 43.22 RCW. 03-12-044, § 296-150M-0725, filed 5/30/03, effective 5/30/03.]

PENALTIES

WAC 296-150M-0800 Definitions applicable to this part. "Administrative law judge" is any person appointed by the chief administrative law judge (as defined in RCW 34.12.020(2)) to preside at a notice of infraction appeal hearing convened under chapter 43.22 RCW.

"Appeal hearing" is any proceeding in which an administrative law judge is empowered to determine legal rights, duties or privileges of specific parties on behalf of the director.

"Appellant" means any person, contractor, firm, partnership, corporation, or other entity that has filed an appeal.

"Compliance inspector" refers to the departmental staff responsible for investigating potential violations of chapter 43.22 RCW.

"Contractor" is as defined in chapters 18.27, 18.106, and 19.28 RCW.

"Department" refers to the department of labor and industries.

"Infraction" means a violation of chapter 43.22 RCW as cited by the department's compliance inspectors.

[Statutory Authority: RCW 43.22.340, 43.22.400, 43.22.432, 43.22.433, 43.22.434, 43.22.480, and 43.22.485, 2002 c 268, and chapter 43.22 RCW. 03-12-044, § 296-150M-0800, filed 5/30/03, effective 5/30/03.]

WAC 296-150M-0805 How does the department ensure that a contractor, firm, partnership, or corporation complies with the requirements of chapter 43.22 RCW? The department of labor and industries ensures that contractors, firms, partnerships, and corporations comply with the requirements of chapter 43.22 RCW and this chapter which require a permit and inspection by the department of alterations to manufactured and mobile homes by:

(1) Inspecting manufactured and mobile home job sites by the department's compliance inspectors; or

(2) Auditing the records of contractors per WAC 296-150M-0720.

[Statutory Authority: RCW 43.22.340, 43.22.400, 43.22.432, 43.22.433, 43.22.434, 43.22.480, and 43.22.485, 2002 c 268, and chapter 43.22 RCW. 03-12-044, § 296-150M-0805, filed 5/30/03, effective 5/30/03.]

WAC 296-150M-0810 What violations of chapter 43.22 RCW can result in the issuance of a notice of infraction? (1) Under chapter 43.22 RCW, the department can issue a notice of infraction to a contractor for:

(a) Failure to obtain a permit before altering a manufactured or mobile home as required by chapter 296-150M WAC;

(b) Failure to correct violations noted as a result of an inspection requested as a result of having purchased a permit.

(2) Each worksite at which a violation occurs constitutes a separate infraction.

(3) Each day on which a violation occurs constitutes a separate infraction.

(4) See WAC 296-150M-0860 for the specific monetary penalties associated with each of the violations discussed in this section.

[Statutory Authority: RCW 43.22.340, 43.22.400, 43.22.432, 43.22.433, 43.22.434, 43.22.480, and 43.22.485, 2002 c 268, and chapter 43.22 RCW. 03-12-044, § 296-150M-0810, filed 5/30/03, effective 5/30/03.]

WAC 296-150M-0815 What information must be included in a notice of infraction? When a contractor violates chapter 43.22 RCW, the department may issue a notice of infraction which must contain the following:

(1) A description of the violation;

(2) A statement of what is required to correct the violation;

(3) The date by which the department requires corrections to be achieved; and

(4) Notice of the individual or department office that must be contacted to obtain a permit or other compliance information.

[Statutory Authority: RCW 43.22.340, 43.22.400, 43.22.432, 43.22.433, 43.22.434, 43.22.480, and 43.22.485, 2002 c 268, and chapter 43.22 RCW. 03-12-044, § 296-150M-0815, filed 5/30/03, effective 5/30/03.]

WAC 296-150M-0820 Who can be issued a notice of infraction? A contractor, firm, partnership, or corporation may be issued a notice of infraction for violations of chapter 43.22 RCW and this chapter.

The department must by certified mail send the written notice of civil penalties imposed under chapter 43.22 RCW and this chapter to the last known address of the party named in the notice.

[Statutory Authority: RCW 43.22.340, 43.22.400, 43.22.432, 43.22.433, 43.22.434, 43.22.480, and 43.22.485, 2002 c 268, and chapter 43.22 RCW. 03-12-044, § 296-150M-0820, filed 5/30/03, effective 5/30/03.]

WAC 296-150M-0830 How does a contractor, firm, partnership, or corporation appeal a notice of infraction? The contractor, firm, partnership, or corporation must:

(1) File two copies of an appeal notice, specifying the reasons for the appeal, at the office designated on the notice of infraction; and

(2) File the appeal notice within twenty days of the mailing of the infraction.

[Statutory Authority: RCW 43.22.340, 43.22.400, 43.22.432, 43.22.433, 43.22.434, 43.22.480, and 43.22.485, 2002 c 268, and chapter 43.22 RCW. 03-12-044, § 296-150M-0830, filed 5/30/03, effective 5/30/03.]

WAC 296-150M-0835 Who presides over an appeal hearing and where is it held? An administrative law judge from the office of administrative hearings will preside over the hearing and give a decision. The hearing shall be conducted in the county where the infraction occurred. However, both the appellant and the department have a right to ask the administrative law judge to change the hearing's location.

[Statutory Authority: RCW 43.22.340, 43.22.400, 43.22.432, 43.22.433, 43.22.434, 43.22.480, and 43.22.485, 2002 c 268, and chapter 43.22 RCW. 03-12-044, § 296-150M-0835, filed 5/30/03, effective 5/30/03.]

WAC 296-150M-0840 Who will represent the appellant and the department at the appeal hearing? Appellants may either represent themselves or be represented by an attorney. The department shall be represented by the office of attorney general.

[Statutory Authority: RCW 43.22.340, 43.22.400, 43.22.432, 43.22.433, 43.22.434, 43.22.480, and 43.22.485, 2002 c 268, and chapter 43.22 RCW. 03-12-044, § 296-150M-0840, filed 5/30/03, effective 5/30/03.]

WAC 296-150M-0845 How is the appeal hearing conducted? The hearing process shall be conducted according to chapter 34.05 RCW, Administrative Procedure Act and chapter 10-08 WAC. All appeals of the hearing decision shall be to the superior court according to chapter 34.05 RCW.

[Statutory Authority: RCW 43.22.340, 43.22.400, 43.22.432, 43.22.433, 43.22.434, 43.22.480, and 43.22.485, 2002 c 268, and chapter 43.22 RCW. 03-12-044, § 296-150M-0845, filed 5/30/03, effective 5/30/03.]

WAC 296-150M-0855 What does the department do with the appeal notices that they receive? (1) Appeal notices that are received timely are first reviewed by the department for purposes of reconsideration.

(2) Appeal notices that are not received timely will be returned to the appellant with appeal rights stated.

(3) Appeal notices that are received timely and are not reconsidered according to subsection (1) of this section are recorded and forwarded to the office of the attorney general then to the office of administrative hearings.

[Statutory Authority: RCW 43.22.340, 43.22.400, 43.22.432, 43.22.433, 43.22.434, 43.22.480, and 43.22.485, 2002 c 268, and chapter 43.22 RCW. 03-12-044, § 296-150M-0855, filed 5/30/03, effective 5/30/03.]

WAC 296-150M-0860 What monetary penalties will be assessed for an infraction issued for violations of chapter 43.22 RCW and this chapter? Monetary penalties that may be assessed for a violation of chapter 43.22 RCW and this chapter are:

Monetary Penalties	Dollar Amount
First Violation	$ 200.00 *
Second Violation	$ 400.00
Third Violation	$ 800.00
Each Additional Violation	$ 1,000.00

* Minimum penalty per violation. Once a violation of chapter 43.22 RCW and this chapter becomes a final judgment, any additional violation is subject to an increased penalty as set forth in the above table.

[Statutory Authority: RCW 43.22.340, 43.22.400, 43.22.432, 43.22.433, 43.22.434, 43.22.480, and 43.22.485, 2002 c 268, and chapter 43.22 RCW. 03-12-044, § 296-150M-0860, filed 5/30/03, effective 5/30/03.]

WAC 296-150M-0865 When must a contractor, firm, partnership, or corporation pay assessed monetary penalties? (1) If a contractor, firm, partnership, or corporation named in a notice of infraction does not choose to appeal the notice, then the contractor, firm, partnership, or corporation must pay the department the amount of the penalty prescribed for the infraction.

(2) After an administrative law judge decides that an infraction has been committed, a contractor who does not appeal the decision to a superior court, has thirty days to pay any outstanding monetary penalties.

[Statutory Authority: RCW 43.22.340, 43.22.400, 43.22.432, 43.22.433, 43.22.434, 43.22.480, and 43.22.485, 2002 c 268, and chapter 43.22 RCW. 03-12-044, § 296-150M-0865, filed 5/30/03, effective 5/30/03.]

MANUFACTURED HOME FEES

WAC 296-150M-3000 Manufactured home fees.

INITIAL FILING FEE	$30.50
DESIGN PLAN FEES:	
STRUCTURAL ALTERATION - MASTER DESIGN (CODE CYCLE)	$122.90
STRUCTURAL ALTERATION - ONE YEAR DESIGN	$82.50
RENEWAL FEE	$36.70
RESUBMITTAL FEE	$61.30
ADDENDUM (Approval expires on the same date as original plan.)	$61.30

ELECTRONIC PLAN SUBMITTAL FEE $4.70 per page for the first set of plans and $0.30 per page for each additional set of plans. These fees are in addition to any applicable design plan fees required under this section.	
DEPARTMENT INSPECTION FEES:	
INSPECTION	
MECHANICAL	
Heat Pump	$30.90
Combination Heat Pump (new) and Furnace (replacement)	$41.20
Air Conditioning	$30.90
Combination Air Conditioning (new) and Furnace (replacement)	$41.20
Furnace Installation (gas*** or electric)	$30.90
Gas*** Piping	$30.90
Wood Stove	$30.90
Pellet Stove	$30.90
Gas*** Room Heater	$30.90
Gas*** Decorative Appliance	$30.90
Range: Changing from electric to gas***	$30.90
Gas*** Water Heater Replacement	$20.60
Water Heater: Changing from electric to gas***	$20.60
Any combination of Furnace, Range, and Water Heater changing from electric to gas*** and includes Gas Piping charge	$61.90
ELECTRICAL	
Heat Pump	$41.20
Heat Pump (when home is prewired for a heat pump)	$10.30
Combination Heat Pump (new) and Furnace (replacement)	$51.60
Air Conditioner	$41.20
Air Conditioner (when home is prewired for an air conditioner)	$10.30
Combination Air Conditioner (new) and Furnace (replacement)	$51.60
Furnace Installation (gas or electric)	$41.20
Wood Stove (if applicable)	$41.20
Pellet Stove (if applicable)	$41.20
Gas*** Room Heater (if applicable)	$41.20
Gas*** Decorative Appliance (if applicable)	$41.20
Range: Changing from gas*** to electric	$41.20
Electric Water Heater Replacement	$41.20
Electric Water Heater replacing Gas*** Water Heater	$41.20
Each added or modified 120 volt circuit (maximum charge is two circuits)	$41.20
Each added 240 volt circuit (for other than Heat Pumps, Air Conditioners, Furnaces, Water Heaters, Ranges, Hot Tubs or Spas)	$41.20
Hot Tub or Spa (power from home electrical panel)	$41.20
Replace main electrical panel	$41.20
Low voltage fire/intrusion alarm	$41.20
Fire Safety	$41.20
Any combination of Furnace, Range and Water Heater changing from electric to gas***	$41.20
PLUMBING	
Fire sprinkler system (also requires a plan review)	$20.60
Each added fixture	$20.60
Replacement of water piping system (this includes two inspections)	$92.80
STRUCTURAL	
Inspection as part of a mechanical/fire safety installation (cut truss/floor joist, sheet rocking)	$41.20
Reroofs (may require a plan review)	$72.20
Changes to home when additions bear loads on home per the design of a professional (also requires a plan review)	$72.20
Other structural changes (may require a plan review)	$72.20
Fire Safety (may also require an electrical fire safety inspection)	$41.20
MISCELLANEOUS	
Other structural changes (may require a plan review)	$72.20
Plan Review	$82.50
OTHER REQUIRED INSPECTIONS (Per hour*)	$56.70
ALL REINSPECTIONS (Per hour*)	$56.70
INSIGNIA FEES:	
ALTERATION	$10.30
REISSUED - LOST/DAMAGED	$10.30
IPIA	
DEPARTMENT AUDIT FEES	
REGULARLY SCHEDULED IPIA AUDIT:	
First inspection on each section (one time only)	$27.90
Second and succeeding inspections of unlabeled sections (Per hour*)	$61.30
OTHER IPIA FEES:	
Red tag removal during a regularly scheduled IPIA audit (Per hour* separate from other fees)	$61.30
Red tag removal at a time other than a regularly scheduled IPIA audit (Per hour* plus travel time* and mileage**)	$61.30
Increased frequency surveillance (Per hour* plus travel time* and mileage**)	$61.30

Attendance at manufacturers training classes (Per hour* only)	$61.30
Subpart "I" investigations (Per hour* plus travel time* and mileage**)	$61.30
Alterations to a labeled unit (Per hour* plus travel time* and mileage**)	$61.30
IPIA Issues/Responses (Per hour* Plus travel time* and mileage**)	$61.30
Monthly surveillance during a regularly scheduled IPIA audit (Per hour* plus travel time* and mileage**)	$61.30
Monthly surveillance at a time other than a regularly scheduled IPIA audit (Per hour* plus travel time* and mileage**)	$61.30
Plant certifications, recertifications and addenda updates (Per hour* plus travel time* and mileage** per each inspector)	$61.30
Response to HBT Audit during a regularly scheduled IPIA audit (Per hour*)	$61.30
Response to HBT Audit at a time other than a regularly scheduled IPIA audit (Per hour* plus travel time*and mileage**)	$61.30
Alternative construction (AC) letter inspections at placement site (Per hour* plus travel time*and mileage**)	$61.30
Replacement of HUD labels (Per hour* plus travel time* and mileage**)	$61.30
State Administrative Agency (SAA) inspection fee (Per hour* plus travel time* and mileage**)	$61.30
OTHER FEES:	
FIELD TECHNICAL SERVICE (Per hour plus travel time* and mileage**)	$56.70
PUBLICATION PRINTING AND DISTRIBUTION OF RCWs AND WACs (One free copy per year upon request)	$11.60
VARIANCE INSPECTION FEE	$82.50
HOMEOWNER REQUESTED INSPECTION	$82.50
DECERTIFICATION OF A MOBILE/MANUFACTURED HOME	$82.50
DEMOLITION OF A MOBILE/MANUFACTURED HOME	$82.50
NOTE: Local jurisdictions may have other fees that apply.	
* Minimum charge of 1 hour; time spent greater than 1 hour is charged in 1/2 hour increments.	
** Per state guidelines.	
*** Gas means all gases; natural, propane, etc.	

[Statutory Authority: Chapters 18.27 and 43.22 RCW. 04-12-048, § 296-150M-3000, filed 5/28/04, effective 6/30/04. Statutory Authority: RCW 43.22.340, 43.22.400, 43.22.432, 43.22.433, 43.22.434, 43.22.480, and 43.22.485, 2002 c 268, and chapter 43.22 RCW. 03-12-044, § 296-150M-3000, filed 5/30/03, effective 5/30/03. Statutory Authority: RCW 43.22.350, 43.22.434, 43.22.480, 43.22.500, 18.27.070, 18.27.075, 70.87.030, 19.28.041, 19.28.051, 19.28.101, 19.28.121, 19.28.161, 19.28.201, 19.28.211, 19.28.341, 2001 c 159, and chapters 43.22, 19.28, 18.27, and 70.87 RCW. 01-12-035, § 296-150M-3000, filed 5/29/01, effective 6/29/01. Statutory Authority: RCW 43.22.340, 43.22.350, 43.22.355, 43.22.360, 43.22.400, 43.22.432, 43.22.433, 43.22.434, 43.22.450, 43.22.480, and 43.22.485. 00-17-148, § 296-150M-3000, filed 8/22/00, effective 9/30/00. Statutory Authority: Chapters 43.22, 18.27, 70.87 and 19.28 RCW. 99-12-080, § 296-150M-3000, filed 5/28/99, effective 6/28/99. Statutory Authority: Chapters 18.106, 18.27 and 43.22 RCW. 98-12-041, § 296-150M-3000, filed 5/29/98, effective 6/30/98. Statutory Authority: RCW 70.87.030, 18.27.070, [18.27.]075, 43.22.350, [43.22.]355, [43.22.]434 and [43.22.]480(2). 97-11-053, § 296-150M-3000, filed 5/20/97, effective 6/30/97. Statutory Authority: RCW 43.22.340, [43.22.]355, [43.22.]360, [43.22.]432, [43.22.]440 and [43.22.]480. 96-21-146, § 296-150M-3000, filed 10/23/96, effective 11/25/96.]

Chapter 296-150P WAC
RECREATIONAL PARK TRAILERS

WAC

296-150P-0010 Authority, purpose, and scope.
296-150P-0020 What definitions apply to this chapter?
296-150P-0030 How is this chapter enforced?
296-150P-0040 Will you keep my manufacturing information confidential?
296-150P-0050 Can you prohibit the sale or lease of my recreational park trailer?
296-150P-0060 Who handles consumer complaints about recreational park trailers?
296-150P-0100 What happens if I disagree with the department's decision regarding my compliance with this chapter and ANSI?
296-150P-0110 Do you have an advisory board to address recreational park trailer issues?
296-150P-0120 Where can I obtain technical assistance regarding recreational park trailers?
296-150P-0130 Do you allow recreational park trailers to be displayed without an insignia?
296-150P-0140 Do you allow the use of alternate materials, alternate design and method of construction?

REQUIREMENTS FOR INSIGNIA AND OTHER IDENTIFICATION

296-150P-0200 Who should obtain recreational park trailer insignia?
296-150P-0210 How do I obtain insignia information and the forms you require?
296-150P-0220 How do I obtain insignia based on state-plan approval?
296-150P-0250 How do I replace lost or damaged insignia?
296-150P-0280 What other identification is required?
296-150P-0290 When and where should the insignia and the identification label be attached to the recreational park trailer?

STATE PLAN

296-150P-0300 What is required to obtain insignia based on state-plan approval?
296-150P-0310 What is required after I am approved as a state-plan manufacturer?

DESIGN PLAN

296-150P-0320 How do I apply for design-plan approval?
296-150P-0330 What is required for comprehensive design-plan approval?
296-150P-0340 What happens if you approve my design plan?
296-150P-0350 If my design plan is not approved, how much time do I have to submit a correct plan?

QUALITY CONTROL PROGRAM/MANUAL

296-150P-0400 What constitutes an acceptable quality control program/manual for state-plan insignia?
296-150P-0410 How do I apply to have my quality control manual approved?
296-150P-0420 What happens if my quality control manual is approved?

DESIGN PLAN/QUALITY CONTROL MANUAL—REVIEW, CHANGE/ADDENDUM, EXPIRATION, AND RENEWAL

296-150P-0440 Do I need approval to change my design plan or quality control manual after I receive state-plan approval?
296-150P-0450 When does state-plan insignia approval expire?

INSPECTION

296-150P-0600 When does a manufacturer, individual builder, or a dealer need to request a recreational park trailer inspection?
296-150P-0610 How do I request a recreational park trailer inspection and what documentation is required?
296-150P-0620 What happens if my recreational park trailer passes inspection?
296-150P-0630 What happens if my recreational park trailer does not pass inspection?
296-150P-0640 Am I charged if I request an inspection but I am not prepared?

AUDIT

296-150P-0700 What does our annual quality control program audit for state-plan insignia include?

LOSS OF STATE-PLAN APPROVAL

296-150P-0710 Can you withdraw my state-plan insignia approval?
296-150P-0720 What happens if my state-plan insignia approval is withdrawn?

RECREATIONAL PARK TRAILER ALTERATIONS

296-150P-1000 Who needs approval to alter a recreational park trailer?
296-150P-1010 Must I purchase a separate insignia for an alteration?
296-150P-1020 How do I apply for alteration approval and obtain the alteration insignia?

MANUFACTURER'S NOTICE TO THE DEPARTMENT

296-150P-2000 Must state-plan manufacturers notify you if they manufacture at more than one location?
296-150P-2010 Must state-plan manufacturers notify you if they change a business name or address?
296-150P-2020 Must state-plan manufacturers notify you of a change in business ownership?
296-150P-2030 Must state-plan manufacturers notify you of their Washington dealers?

RECREATIONAL PARK TRAILER FEES

296-150P-3000 Recreational park trailer fees.

WAC 296-150P-0010 Authority, purpose, and scope. (1) This chapter is authorized by RCW 43.22.335 through 43.22.434 and covers the requirements for:

(a) Obtaining state-plan status if you manufacture recreational park trailers for sale or lease in Washington state.

(b) Obtaining state-plan insignia if you manufacture recreational park trailers for sale or lease in Washington state.

(2) This chapter applies to:

(a) Manufacturers, dealers and individuals who build for sale, sell, or lease recreational park trailers in Washington state; and

(b) Manufacturers, dealers, and individuals who alter recreational park trailers for sale or lease in Washington state.

[Statutory Authority: RCW 43.22.340 and 43.22.420. 97-16-043, § 296-150P-0010, filed 7/31/97, effective 12/1/97.]

WAC 296-150P-0020 What definitions apply to this chapter? "Alteration" is the replacement, addition, modification, or removal of any equipment or material that affects the fire and life safety provisions, structural system, plumbing systems, fuel systems and equipment or electrical systems of a recreational park trailer.

The following changes are not considered alterations for purposes of this chapter:

• Repairs with approved parts;

• Modification of a fuel-burning appliance according to the terms of its listing; and

• Adjustment and maintenance of equipment.

"Alteration insignia" is an insignia which indicates a recreational park trailer alteration was approved by the department.

"ANSI" is the American National Standards Institute, Inc., and the institute's rules applicable to recreational park trailers. For the purposes of this chapter, references to ANSI mean ANSI A119.5 Recreational Park Trailers, 1998 edition.

"Approved" is approved by the department of labor and industries.

"Audit" by the department is the department inspection of a manufacturer's quality control procedures, comprehensive plans, and recreational park trailers.

"Comprehensive design plan" consists of the design plans and copies of drawings such as:

• Floor plans relating to fire and life safety, structural, electrical, plumbing, liquefied petroleum (LP) and/or natural gas systems and appliances and air conditioning systems, if applicable to the plan of each recreational park trailer.

• Plumbing line drawings which describe the size, length and location of gas piping lines, liquid and body waste lines, liquid and body waste tanks, and potable water tanks.

• Electrical drawings. (See WAC 296-150P-0330.)

"Consumer" is a person or organization who buys or leases recreational park trailers.

"Dealer" is a person or organization whose business is offering recreational park trailers for sale or lease.

"Department" is the department of labor and industries. The department may be referred to as "we" or "us" in this chapter. Note: You may contact us at: Department of Labor and Industries, Specialty Compliance, PO Box 44430, Olympia, WA 98504-4430.

"Equipment" is all material, appliances, fixtures, and accessories used in the manufacture or alteration of recreational park trailers.

"Manual" is a reference containing instructions, procedures, responsibilities and other information used to implement and maintain the quality control program of a recreational park trailer manufacturer.

"National Electrical Code" see Appendix 'C' of ANSI A119.5 for reference to the appropriate edition to use for compliance.

"Recreational park trailer" is a trailer-type unit that is primarily designed to provide temporary living quarters for recreational, camping or seasonal use, that meets the following criteria:

• Built on a single chassis, mounted on wheels;

• Having a gross trailer area not exceeding 400 square feet (37.15 square meters) in the set-up mode; and

• Certified by the manufacturer as complying with ANSI A119.5.

"Quality control" is the plan and method for ensuring that the manufacture, fabrication, assembly, installation, storing, handling, and use of materials complies with this chapter and ANSI.

"State-plan insignia" is an insignia which is obtained under the state design-plan approval process.

"System" is a part of a recreational park trailer that is designed to serve a particular function such as plumbing, electrical, heating, mechanical or structural system.

[Statutory Authority: RCW 43.22.340, 43.22.400, 43.22.432, 43.22.433, 43.22.434, 43.22.480, and 43.22.485, 2002 c 268, and chapter 43.22 RCW. 03-12-044, § 296-150P-0020, filed 5/30/03, effective 6/30/03. Statutory Authority: RCW 43.22.340 and 43.22.480. 99-13-010, § 296-150P-0020, filed 6/4/99, effective 7/5/99. Statutory Authority: RCW 43.22.340 and 43.22.420. 97-16-043, § 296-150P-0020, filed 7/31/97, effective 12/1/97.]

WAC 296-150P-0030 How is this chapter enforced? (1) We enforce this chapter through the state-plan insignia approval process (see WAC 296-150P-0300 through 296-150P-0720).

(2) Recreational park trailer inspections occur where the recreational park trailers are manufactured, sold, or leased. We conduct inspections during normal work hours or at other reasonable times. We may require you to remove a part of the recreational park trailer in order to conduct our inspection.

[Statutory Authority: RCW 43.22.340 and 43.22.420. 97-16-043, § 296-150P-0030, filed 7/31/97, effective 12/1/97.]

WAC 296-150P-0040 Will you keep my manufacturing information confidential? We will only release manufacturing information, such as design plans, specifications, test results, and manuals, according to the Public Records Act (see RCW 42.17.310 (1)(h)) unless we are ordered to do so by a court or otherwise required by law.

[Statutory Authority: RCW 43.22.340 and 43.22.420. 97-16-043, § 296-150P-0040, filed 7/31/97, effective 12/1/97.]

WAC 296-150P-0050 Can you prohibit the sale or lease of my recreational park trailer? (1) We may prohibit the sale or lease of your recreational park trailer because it is unlawful for any person to sell, lease, or offer for sale a recreational park trailer within this state if it violates any of the requirements of this chapter (see RCW 43.22.345).

(2) If an inspection reveals that a recreational park trailer violates this chapter, we may post a notice prohibiting the sale or lease of a recreational park trailer.

[Statutory Authority: RCW 43.22.340 and 43.22.480. 99-13-010, § 296-150P-0050, filed 6/4/99, effective 7/5/99.]

WAC 296-150P-0060 Who handles consumer complaints about recreational park trailers? (1) Consumers may file complaints with us, if they have reason to believe a manufacturer and/or dealer is in violation of this chapter and ANSI.

(2) The complaint should be in writing and describe the items that may not comply with this chapter and ANSI.

(3) After we receive the complaint, we will send the manufacturer and/or the dealer a copy of the complaint. The manufacturer and/or dealer has thirty days to respond to the complaint.

(4) If we decide an inspection is warranted and specific code violation(s) are found during the inspection, the manufacturer or dealer is charged for the inspection.

[Statutory Authority: RCW 43.22.340 and 43.22.420. 97-16-043, § 296-150P-0060, filed 7/31/97, effective 12/1/97.]

WAC 296-150P-0100 What happens if I disagree with the department's decision regarding my compliance with this chapter and ANSI? (1) If we determine that you are in violation of this chapter and ANSI, you will receive a notice of noncompliance and we may withdraw your certification. (See WAC 296-150P-0710.)

(2) If you disagree with our decision, you can send us a written request for a hearing, stating why you disagree.

(3) After we receive your hearing request, we will:

(a) Schedule a hearing within thirty days after we receive your request.

(b) Notify you of the time, date, and place for the hearing. If you fail to appear, your case will be dismissed.

(c) Hear your case.

(d) Send you written notice of our decision.

If you disagree with our decision, you may appeal it under the Administrative Procedure Act (chapter 34.05 RCW).

[Statutory Authority: RCW 43.22.340 and 43.22.420. 97-16-043, § 296-150P-0100, filed 7/31/97, effective 12/1/97.]

WAC 296-150P-0110 Do you have an advisory board to address recreational park trailer issues? The factory assembled structures (FAS) board advises us on issues relating to plumbing, heating, electrical, installation, alterations, inspections, and rules for recreational park trailers. (See RCW 43.22.420.)

[Statutory Authority: RCW 43.22.340 and 43.22.420. 97-16-043, § 296-150P-0110, filed 7/31/97, effective 12/1/97.]

WAC 296-150P-0120 Where can I obtain technical assistance regarding recreational park trailers? We provide field technical service to recreational park trailer manufacturers for an hourly fee (see WAC 296-150P-3000). Field technical service may include an evaluation, consultation, plan examination, interpretation, and clarification of technical data relating to the application of our rules. It does not include inspections.

[Statutory Authority: RCW 43.22.340 and 43.22.420. 97-16-043, § 296-150P-0120, filed 7/31/97, effective 12/1/97.]

WAC 296-150P-0130 Do you allow recreational park trailers to be displayed without an insignia? We allow one recreational park trailer to be displayed without an insignia, if you:

(1) Get written approval from us in advance of displaying the unit; we should receive your written request at least thirty days prior to display of the unit. Your request must include:

(a) The model and serial number of the unit;

(b) The location where the unit will be displayed; and

(c) The date(s) the unit will be displayed.

(2) Are licensed in Washington state through the department of licensing;

(3) Have your approval letter available at the display;

(4) Place three visible signs on the display unit:

(a) One at the main entry door;

(b) One inside the front of the unit; and

(c) One inside the back of the unit.

The signs must read: NOT FOR SALE - DISPLAY ONLY.

The letters on the sign must be one inch or higher.

[Statutory Authority: RCW 43.22.340 and 43.22.420. 97-16-043, § 296-150P-0130, filed 7/31/97, effective 12/1/97.]

WAC 296-150P-0140 Do you allow the use of alternate materials, alternate design and method of construction? An applicant may apply for the use of alternate materials, alternate design and methods of construction different from the requirements of this chapter by filing a written request with the department.

(1) Responsibilities of applicant. The applicant must submit in writing the following information and sign and date the request.

(a) The applicant's name, address and phone number;

(b) The specific requirement or requirements from which the alternate material, alternate design or method of construction is requested;

(c) Justification that the requirements of this chapter cannot be met without using alternate materials, alternate design or method of construction;

(d) How the use of alternate materials, alternate design or method of construction will achieve the same result as the requirement and any specific alternative measures to be taken to show the alternate provides the same level of protection to life, safety and health as the requirements.

The department has a form that you may use for your request. Contact the department at the address shown in the definition section.

(2) Responsibilities of the department. The department will provide a written response to the applicant within thirty days of receipt of the written request. The written response will state the acceptance or denial of the request, including the reasons for the department's decision. At a minimum the department will base its decision based on:

(a) The applicant's request as described in subsection (1) of this section;

(b) Research into the request;

(c) Expert advice.

(3) Applicant's response to denials. The applicant may appeal the department's decision by following the procedure in WAC 296-150P-0100.

[Statutory Authority: RCW 43.22.340, 43.22.350, 43.22.355, 43.22.360, 43.22.400, 43.22.432, 43.22.433, 43.22.434, 43.22.450, 43.22.480, and 43.22.485. 00-17-148, § 296-150P-0140, filed 8/22/00, effective 9/30/00. Statutory Authority: RCW 43.22.340 and 43.22.480. 99-13-010, § 296-150P-0140, filed 6/4/99, effective 7/5/99.]

REQUIREMENTS FOR INSIGNIA AND OTHER IDENTIFICATION

WAC 296-150P-0200 Who should obtain recreational park trailer insignia? (1) If you manufacture recreational park trailers to be sold or leased in Washington, you must purchase a state-plan insignia for each recreational park trailer.

(2) Individuals that build recreational park trailers to sell or lease in Washington must purchase an insignia.

(3) If you have a recreational park trailer with a state-plan insignia and you plan to alter or have another person alter it, you must obtain an alteration insignia from us.

Note: You do not need to purchase our insignia if you manufacture recreational park trailers in Washington for sale outside the state.

[Statutory Authority: RCW 43.22.340 and 43.22.420. 97-16-043, § 296-150P-0200, filed 7/31/97, effective 12/1/97.]

WAC 296-150P-0210 How do I obtain insignia information and the forms you require? Upon request, we will provide you with a packet of information that includes required forms and fee schedule for obtaining the state-plan insignia. Our address is noted in the definition of department.

[Statutory Authority: RCW 43.22.340 and 43.22.420. 97-16-043, § 296-150P-0210, filed 7/31/97, effective 12/1/97.]

WAC 296-150P-0220 How do I obtain insignia based on state-plan approval? (1) If you are approved to purchase insignia based on state-plan approval, you may purchase the insignia by submitting the insignia application with the required fees. (See WAC 296-150P-3000.)

(2) The application must include:

(a) A signed statement from you certifying that you are manufacturing your units according to your approved design plans and your quality control program; and

(b) A list of the approved design plans against which you will apply the insignia.

[Statutory Authority: RCW 43.22.340 and 43.22.420. 97-16-043, § 296-150P-0220, filed 7/31/97, effective 12/1/97.]

WAC 296-150P-0250 How do I replace lost or damaged insignia? (1) If an insignia is lost or damaged after it is placed on a recreational park trailer and you are the manufacturer or owner, you must notify us in writing immediately.

(2) Your notification should include the following information:

(a) Your name, address, and telephone number;

(b) The recreational park trailer serial number;

(c) The insignia number and design-plan approval number, if applicable; and

(d) The required fee. (See WAC 296-150P-3000.)

(3) If we can determine that your unit previously had an insignia, we will attach the insignia to your recreational park trailer once we receive your insignia fee. (See WAC 296-150P-3000.)

[Statutory Authority: RCW 43.22.340 and 43.22.420. 97-16-043, § 296-150P-0250, filed 7/31/97, effective 12/1/97.]

WAC 296-150P-0280 What other identification is required? Every new recreational park trailer manufactured, offered for sale or lease, or sold or leased in Washington must also have a vehicle identification number (VIN) label in compliance with the Federal Department of Transportation (DOT) safety standards.

[Statutory Authority: RCW 43.22.340 and 43.22.420. 97-16-043, § 296-150P-0280, filed 7/31/97, effective 12/1/97.]

WAC 296-150P-0290 When and where should the insignia and the identification label be attached to the recreational park trailer? (1) Insignia must be attached to the finished recreational park trailer before it leaves the approved manufacturer's location.

(2) The state-plan insignia must be attached adjacent to the main door, on the strike side of the door, at least twelve inches above the floor line. The strike side of the door is opposite the hinge side of the door.

(3) The alteration insignia must be attached next to the certification insignia.

(4) The identification number (VIN) label must be attached on the recreational park trailer as required by the Federal Department of Transportation. Any other identification label must be attached next to the certification insignia or on the exterior front half of the left side of the recreational park trailer, at least six inches above the floor line.

[Statutory Authority: RCW 43.22.340 and 43.22.420. 97-16-043, § 296-150P-0290, filed 7/31/97, effective 12/1/97.]

STATE PLAN

WAC 296-150P-0300 What is required to obtain insignia based on state-plan approval? If you want to obtain insignia based on state-plan approval, you must:

(1) Have your design plan and quality control manual approved by us; and

(2) Pass a quality control program audit which includes a random inspection of your recreational park trailers.

[Statutory Authority: RCW 43.22.340 and 43.22.420. 97-16-043, § 296-150P-0300, filed 7/31/97, effective 12/1/97.]

WAC 296-150P-0310 What is required after I am approved as a state-plan manufacturer? Once you have obtained approval as a state-plan manufacturer:

(1) You are required to submit comprehensive design plans to us for approval;

(2) You can inspect your own recreational park trailer based upon your quality control manual specifications; and

(3) You are subject to a semiannual audit at your manufacturing location(s).

[Statutory Authority: RCW 43.22.340 and 43.22.420. 97-16-043, § 296-150P-0310, filed 7/31/97, effective 12/1/97.]

DESIGN PLAN

WAC 296-150P-0320 How do I apply for design-plan approval? Upon request, we will send you a design-plan approval request form.

[Statutory Authority: RCW 43.22.340 and 43.22.420. 97-16-043, § 296-150P-0320, filed 7/31/97, effective 12/1/97.]

WAC 296-150P-0330 What is required for comprehensive design-plan approval? If you are the manufacturer applying for state-plan approval:

(1) You must submit two sets of comprehensive design plans (do not send originals) to us for approval. Design plans must be accompanied by the initial filing fee, if appropriate, and the design-plan fee. (See WAC 296-150P-3000.)

(2) Your comprehensive design plan must indicate compliance with the appropriate ANSI standards in the following plans and drawings:

(a) Floor plans relating to fire and life safety, electrical, plumbing, liquefied petroleum (LP) and/or natural gas systems and appliances, and air conditioning systems, if applicable, of each recreational park trailer.

(b) Plumbing line drawings which describe the size, length and location of gas piping lines, liquid and body waste lines, liquid and body waste tanks, and potable water tanks.

(c) Electrical drawings.

(d) Structural drawings showing compliance with ANSI A119.5, Chapter 5.

Note: We will provide a check list with detailed requirements for each type of plan upon request.

(3) Current comprehensive design plans must be available at each manufacturing location.

(4) You must have an approved quality control manual. (See WAC 296-150P-0400, 296-150P-0410.)

Note: You do not need a quality control manual if you are an individual asking us to inspect a recreational park trailer.

[Statutory Authority: RCW 43.22.340 and 43.22.420. 97-16-043, § 296-150P-0330, filed 7/31/97, effective 12/1/97.]

WAC 296-150P-0340 What happens if you approve my design plan? (1) Your design plan will be approved if it complies with the requirements of this chapter and ANSI.

(2) We will send you an approved copy of the design plan with the approval number.

(3) You must keep copies of the approved design plan for all models produced at the manufacturing location.

(4) If your design plan is not approved, you will be notified in writing of plan deficiencies. You may send a corrected design plan to us.

[Statutory Authority: RCW 43.22.340 and 43.22.420. 97-16-043, § 296-150P-0340, filed 7/31/97, effective 12/1/97.]

WAC 296-150P-0350 If my design plan is not approved, how much time do I have to submit a correct plan? (1) You have ninety days to correct and resubmit your original design plan and send us the resubmittal fee once we notify you of plan deficiencies. After ninety days, your initial design plan is returned to you.

(2) If you submit your corrected design plan after ninety days, you must send the initial design-plan fee instead of the resubmittal fee. (See WAC 296-150R-3000.)

[Statutory Authority: RCW 43.22.340 and 43.22.420. 97-16-043, § 296-150P-0350, filed 7/31/97, effective 12/1/97.]

QUALITY CONTROL PROGRAM/MANUAL

WAC 296-150P-0400 What constitutes an acceptable quality control program/manual for state-plan insignia? Your quality control program must implement your approved quality control manual. The quality control manual must provide instructions, procedures, and assign responsibilities to assure quality control requirements are met when the recreational park trailers are manufactured. The minimum quality control manual requirements are:

(1) An organization chart which identifies quality assurance positions and describes quality control responsibilities and accountability for the following plant personnel: General manager, plant production manager, plant foreperson, lead persons, production, quality control, sales, engineering, purchasing, and receiving staff;

(2) A method to distribute all comprehensive design plans and installation instructions or other documentation that ensures all products used are installed correctly in all recreational park trailer models produced at each manufacturing location;

(3) Procedures for maintaining the quality assurance of each recreational park trailer model;

(4) Drawings and procedures displaying manufacturing processes including a schematic plant layout;

(5) Descriptions of production stations, including surge-hold stations, on-site or off-site repair-rework locations, and off-line construction sites. Descriptions should identify by station and location the work, tests, or inspections performed and the job title of the person performing the quality control review;

(6) Inspection and equipment maintenance instructions, including jig maintenance, check-off lists, and other docu-

mentation verifying quality control performance and accountability;

(7) Coordination of staff duties ensuring smooth transition of manufacturing responsibilities during the shift change;

(8) Instructions regarding the identification, control, and handling of damaged goods or materials that do not comply with existing rules and ANSI;

(9) Information about recreational park trailer material storage and environmental control including protection from the weather and the elimination of scrap and age-dated materials which have exceeded their life;

(10) Verification that testing equipment is properly calibrated and that your gauges are accurate;

(11) Information about production line testing which includes descriptions of procedures, test equipment, and the location of each test. The information should demonstrate accountability for test completion, for rework and repair, and for retesting;

(12) Instructions, procedures, descriptions, and responsibilities for insignia storage, security, application, and inventory;

(13) Procedures for mixed production lines, for variable production rates, for new or substitute personnel, and for new or changed inspections and tests;

(14) Instructions, procedures, and responsibilities for keeping recreational park trailer records which include the unit serial number, model, plan approval number, dealer location or destination, insignia number, inspection, and test results;

(15) Information about your quality control training program; and

(16) Procedures for introducing new designs, models, materials and equipment to staff that ensures products are built according to the standards and the manufacturer's instructions.

[Statutory Authority: RCW 43.22.340 and 43.22.420. 97-16-043, § 296-150P-0400, filed 7/31/97, effective 12/1/97.]

WAC 296-150P-0410 How do I apply to have my quality control manual approved? We will provide the form and instructions upon request.

[Statutory Authority: RCW 43.22.340 and 43.22.420. 97-16-043, § 296-150P-0410, filed 7/31/97, effective 12/1/97.]

WAC 296-150P-0420 What happens if my quality control manual is approved? (1) Your quality control manual will be approved if it meets the requirements of this chapter and ANSI.

(2) We will send you an approved copy of your quality control manual.

(3) If your quality control manual is not approved, you will be notified in writing of the deficiencies. You may send us a corrected quality control manual.

[Statutory Authority: RCW 43.22.340 and 43.22.420. 97-16-043, § 296-150P-0420, filed 7/31/97, effective 12/1/97.]

DESIGN PLAN/QUALITY CONTROL MANUAL—REVIEW, CHANGE/ADDENDUM, EXPIRATION, AND RENEWAL

WAC 296-150P-0440 Do I need approval to change my design plan or quality control manual after I receive state-plan approval? (1) Once you have received state-plan approval and you want to change your design plan or quality control manual, we must approve the changes/addenda.

(2) You should send design plan or quality control manual changes to us thirty days before you want the changes/addenda to take effect.

[Statutory Authority: RCW 43.22.340 and 43.22.420. 97-16-043, § 296-150P-0440, filed 7/31/97, effective 12/1/97.]

WAC 296-150P-0450 When does state-plan insignia approval expire? (1) As a state-plan manufacturer, your approval for insignia is based upon approval of your design plan and quality control manual. Design plans are considered approved until a new ANSI code edition is adopted or unless revisions to ANSI prior to code changes would not support our design-plan approval.

(2) If, after the new ANSI code edition is adopted, your design plan and quality control manual remain identical (you may change the model name or designation) to your original design plan, you only need to submit the new plan fee and the plan approval request. **(Do not send plans.)**

Note: ANSI codes are normally adopted for a three-year period.

[Statutory Authority: RCW 43.22.340 and 43.22.420. 97-16-043, § 296-150P-0450, filed 7/31/97, effective 12/1/97.]

INSPECTION

WAC 296-150P-0600 When does a manufacturer, individual builder, or a dealer need to request a recreational park trailer inspection? If you are a manufacturer, individual builder, or a dealer, you must request a recreational park trailer inspection by us:

(1) If you have approval of your design plan and quality control manual and need to complete the state-plan process;

(2) If you are making a recreational park trailer alteration which must be inspected and approved by us; or

(3) If you are correcting a violation which must be inspected and approved by us.

Note: An individual who is building a recreational park trailer to own, sell, or lease must obtain an identification number from the state patrol prior to our issuance of certification insignia.

[Statutory Authority: RCW 43.22.340 and 43.22.420. 97-16-043, § 296-150P-0600, filed 7/31/97, effective 12/1/97.]

WAC 296-150P-0610 How do I request a recreational park trailer inspection and what documentation is required? (1) Complete an inspection application which can be obtained from us.

(2) Send the completed application, application fee, and inspection fee to us prior to the date you would like an inspection performed. (See WAC 296-150P-3000.)

(3) During the inspection, have your approved design plans, specifications, and test results available for our inspector.

(4) A recreational park trailer inspection will be completed in two or more phases. The "cover" inspection during the construction of the unit before the electrical, plumbing, mechanical, heating, and structural systems are covered. The final inspection takes place after the recreational park trailer is complete.

[Statutory Authority: RCW 43.22.340 and 43.22.420. 97-16-043, § 296-150P-0610, filed 7/31/97, effective 12/1/97.]

WAC 296-150P-0620 What happens if my recreational park trailer passes inspection? (1) If your recreational park trailer passes inspection and you have met the other requirements of this chapter and ANSI, you will be approved to purchase state-plan insignia from us.

(2) If you send your insignia application and fee to us prior to the inspection, we will attach your insignia when we approve the recreational park trailer.

[Statutory Authority: RCW 43.22.340 and 43.22.420. 97-16-043, § 296-150P-0620, filed 7/31/97, effective 12/1/97.]

WAC 296-150P-0630 What happens if my recreational park trailer does not pass inspection? (1) If your recreational park trailer does not pass inspection, you will receive a notice of noncompliance.

(2) You have ten days after receiving the notice of noncompliance to send us a written response explaining how you will correct the violation(s) and prevent its reoccurrence.

(3) You are not allowed to move, sell or lease a recreational park trailer until:

(a) You correct the violation(s);

(b) We inspect and approve the correction(s); and

(c) You pay the inspection fee and the insignia fee, if required. (See WAC 296-150P-3000.)

(4) If you fail to make the corrections, the sale or lease of your recreational park trailer is prohibited by RCW 43.22.-340 until the corrections are made.

Note: You will be allowed to return a recreational park trailer to the manufacturing location or to another location for correction with our approval.

[Statutory Authority: RCW 43.22.340 and 43.22.420. 97-16-043, § 296-150P-0630, filed 7/31/97, effective 12/1/97.]

WAC 296-150P-0640 Am I charged if I request an inspection but I am not prepared? (1) If you ask us to inspect recreational park trailers within Washington state but are not prepared when we arrive, you must pay the minimum inspection fee and travel.

(2) If you ask us to inspect recreational park trailers outside Washington state but are not prepared when we arrive, you must pay the minimum inspection fee, travel, and per diem expenses.

[Statutory Authority: RCW 43.22.340 and 43.22.420. 97-16-043, § 296-150P-0640, filed 7/31/97, effective 12/1/97.]

AUDIT

WAC 296-150P-0700 What does our annual quality control program audit for state-plan insignia include? (1) During your annual audit for state-plan insignia, we will review your quality control program and randomly inspect your recreational park trailer.

(2) If our audit indicates that you are complying with the requirements of this chapter and ANSI, you may purchase state-plan insignia.

(3) If we discover a quality control program deficiency or a recreational park trailer violation during our audit, you will receive a notice of noncompliance and cannot purchase state-plan insignia until the deficiency or violation is corrected.

(a) You can correct the deficiency or violation during the audit; or

(b) You have fourteen days after receiving the notice of noncompliance to send us a written response explaining your correction of the deficiency or violation; and

(c) You are subject to a follow-up audit.

[Statutory Authority: RCW 43.22.340 and 43.22.420. 97-16-043, § 296-150P-0700, filed 7/31/97, effective 12/1/97.]

LOSS OF STATE-PLAN APPROVAL

WAC 296-150P-0710 Can you withdraw my state-plan insignia approval? Should you fail to meet the requirements of this chapter or ANSI after you have been approved to purchase state-plan insignia, we will withdraw your certification.

[Statutory Authority: RCW 43.22.340 and 43.22.420. 97-16-043, § 296-150P-0710, filed 7/31/97, effective 12/1/97.]

WAC 296-150P-0720 What happens if my state-plan insignia approval is withdrawn? If your state-plan insignia approval is withdrawn because you have failed to comply with this chapter and ANSI:

(1) You must return any issued but unused insignia to us; and

(2) You cannot sell or lease recreational park trailers in Washington.

[Statutory Authority: RCW 43.22.340 and 43.22.420. 97-16-043, § 296-150P-0720, filed 7/31/97, effective 12/1/97.]

RECREATIONAL PARK TRAILER ALTERATIONS

WAC 296-150P-1000 Who needs approval to alter a recreational park trailer? Any alteration by a manufacturer, dealer, or individual to a recreational park trailer with state-certified insignia must be approved by us before the alteration is made. "Alteration" is defined in WAC 296-150P-0020.

Note: We may remove your insignia if you alter or have someone alter a recreational park trailer without our approval.

[Statutory Authority: RCW 43.22.340 and 43.22.420. 97-16-043, § 296-150P-1000, filed 7/31/97, effective 12/1/97.]

WAC 296-150P-1010 Must I purchase a separate insignia for an alteration? You are required to purchase an alteration insignia from us.

[Statutory Authority: RCW 43.22.340 and 43.22.420. 97-16-043, § 296-150P-1010, filed 7/31/97, effective 12/1/97.]

WAC 296-150P-1020 How do I apply for alteration approval and obtain the alteration insignia? (1) To apply for alteration approval and the alteration insignia, you must:

(a) Complete an alteration permit form and an application for alteration insignia. We will provide the forms.

(b) Submit the completed forms, with the inspection fee and altered recreational park trailer insignia fee, to us. (See WAC 296-150P-3000.)

(2) Our recreational park trailer inspection of the alteration will be in two or more phases. The "cover" inspection during the alteration of the unit before the electrical, plumbing, mechanical, heating, structural or other systems are covered. The final inspection takes place after the alteration inspection is complete.

(3) Once we approve your alteration, we will attach the alteration insignia.

[Statutory Authority: RCW 43.22.340 and 43.22.420. 97-16-043, § 296-150P-1020, filed 7/31/97, effective 12/1/97.]

MANUFACTURER'S NOTICE TO THE DEPARTMENT

WAC 296-150P-2000 Must state-plan manufacturers notify you if they manufacture at more than one location? (1) We must approve each recreational park trailer manufacturing location producing units for sale or lease in Washington state.

(2) You must send us the following information for each manufacturing location when you are certified:

(a) Company name;

(b) Mailing and physical address;

(c) Phone and fax number if available;

(d) Type of recreational park trailer(s) manufactured;

(e) Contact person for plan review; and

(f) Contact person for plant audit.

(3) You must update the information as it changes.

[Statutory Authority: RCW 43.22.340 and 43.22.420. 97-16-043, § 296-150P-2000, filed 7/31/97, effective 12/1/97.]

WAC 296-150P-2010 Must state-plan manufacturers notify you if they change a business name or address? (1) If you are moving your business from an approved manufacturing location, the new location must be approved before shipping units from that location for sale or lease in Washington state.

(2) You must notify us in writing prior to a change of business name or address.

[Statutory Authority: RCW 43.22.340 and 43.22.420. 97-16-043, § 296-150P-2010, filed 7/31/97, effective 12/1/97.]

WAC 296-150P-2020 Must state-plan manufacturers notify you of a change in business ownership? (1) When a recreational park trailer manufacturing business changes ownership, the new owner must notify us in writing immediately.

(2) A new owner may continue to manufacture recreational park trailers using approved design plans or comprehensive design plans according to this chapter.

(3) The department will perform an audit of the manufacturer after the ownership change to ensure you are meeting the requirements of this chapter and ANSI.

[Statutory Authority: RCW 43.22.340 and 43.22.420. 97-16-043, § 296-150P-2020, filed 7/31/97, effective 12/1/97.]

WAC 296-150P-2030 Must state-plan manufacturers notify you of their Washington dealers? (1) You must send us the following information about yourself and each of your Washington dealers when you are certified:

(a) Dealership name;

(b) Mailing and physical address;

(c) Phone and fax number if available;

(d) Type of recreational park trailer(s); and

(e) Contact person.

(2) You must update this information as it changes.

[Statutory Authority: RCW 43.22.340 and 43.22.420. 97-16-043, § 296-150P-2030, filed 7/31/97, effective 12/1/97.]

RECREATIONAL PARK TRAILER FEES

WAC 296-150P-3000 Recreational park trailer fees.

INITIAL FILING FEE	$31.40
DESIGN PLAN FEES:	
NEW PLAN REVIEW FEE WITHOUT STRUCTURAL REQUIREMENTS	$88.60
NEW PLAN REVIEW FEE WITH STRUCTURAL REQUIREMENTS	$117.00
RESUBMITTAL FEE	$63.20
ADDENDUM (Approval expires on same date as original plan.)	$63.20
ELECTRONIC PLAN SUBMITTAL FEE $4.80 per page for the first set of plans and $0.30 per page for each additional set of plans. These fees are in addition to any applicable design plan fees required under this section.	
QUALITY CONTROL/MANUAL FEES:	
INITIAL APPROVAL	$11.90
RESUBMITTAL FEE	$63.20
ADDENDUM	$63.20
DEPARTMENT AUDIT FEES:	
AUDIT (per hour)*	$63.20
TRAVEL (per hour)*	$63.20
PER DIEM**	
HOTEL***	
MILEAGE**	
RENTAL CAR***	
PARKING***	
AIRFARE***	

DEPARTMENT INSPECTION FEES:	
INSPECTION (per hour)*	$63.20
TRAVEL (per hour)*	$63.20
PER DIEM**	
HOTEL***	
MILEAGE**	
RENTAL CAR***	
PARKING***	
AIRFARE***	
ALTERATION INSPECTION (One hour plus insignia alteration fee)	$94.60
INSIGNIA FEES:	
STATE CERTIFIED	$11.70
ALTERATION	$31.40
REISSUED-LOST/DAMAGED	$11.70
OTHER FEES:	
FIELD TECHNICAL SERVICE (per hour* plus travel time* and mileage**)	$63.20
PUBLICATION PRINTING AND DISTRIBUTION OF RCWs AND WACs (One free copy per year upon request)	$11.90
* Minimum charge of 1 hour; time spent greater than 1 hour is charged in 1/2 hour increments.	
** Per state guidelines.	
*** Actual charges incurred.	

[Statutory Authority: Chapters 18.27 and 43.22 RCW. 04-12-048, § 296-150P-3000, filed 5/28/04, effective 6/30/04. Statutory Authority: RCW 43.22.350, 43.22.434, 43.22.480, 43.22.500, 70.87.030, 18.106.070, 18.106.125, 2001 c 7, and chapters 18.106, 43.22, and 70.87 RCW. 03-12-045, § 296-150P-3000, filed 5/30/03, effective 6/30/03. Statutory Authority: RCW 43.22.350, 43.22.434, 43.22.480, 43.22.500, 18.27.040, 18.27.070, 18.27.075, 70.87.030, 19.28.041, 19.28.051, 19.28.101, 19.28.121, 19.28.161, 19.28.201, 19.28.211, 19.28.341, 2001 c 7, 2002 c 249, and chapters 19.28, 43.22, 18.27, and 70.87 RCW. 02-12-022, § 296-150P-3000, filed 5/28/02, effective 6/28/02. Statutory Authority: RCW 43.22.350, 43.22.434, 43.22.480, 43.22.500, 18.27.070, 18.27.075, 70.87.030, 19.28.041, 19.28.051, 19.28.101, 19.28.121, 19.28.161, 19.28.201, 19.28.211, 19.28.341, 2001 c 159, and chapters 43.22, 19.28, 18.27, and 70.87 RCW. 01-12-035, § 296-150P-3000, filed 5/29/01, effective 6/29/01. Statutory Authority: RCW 43.22.340, 43.22.350, 43.22.355, 43.22.360, 43.22.400, 43.22.432, 43.22.433, 43.22.434, 43.22.450, 43.22.480, and 43.22.485. 00-17-148, § 296-150P-3000, filed 8/22/00, effective 9/30/00. Statutory Authority: Chapters 43.22, 18.27, 70.87 and 19.28 RCW. 99-12-080, § 296-150P-3000, filed 5/28/99, effective 6/28/99. Statutory Authority: Chapters 18.106, 18.27 and 43.22 RCW. 98-12-041, § 296-150P-3000, filed 5/29/98, effective 6/30/98. Statutory Authority: RCW 43.22.340 and 43.22.420. 97-16-043, § 296-150P-3000, filed 7/31/97, effective 12/1/97.]

Chapter 296-150R WAC
RECREATIONAL VEHICLES

WAC

296-150R-0010 Authority, purpose, and scope.
296-150R-0020 What definitions apply to this chapter?
296-150R-0030 How is this chapter enforced?
296-150R-0040 Will you keep my manufacturing information confidential?
296-150R-0050 Can you prohibit the sale or lease of my recreational vehicle?
296-150R-0060 Who handles consumer complaints about recreational vehicles?
296-150R-0100 What happens if I disagree with the department's decision regarding my compliance with this chapter and ANSI?
296-150R-0110 Do you have an advisory board to address recreational vehicle issues?
296-150R-0120 Where can I obtain technical assistance regarding recreational vehicles?
296-150R-0130 Do you allow recreational vehicles to be displayed without an insignia?
296-150R-0140 Do you allow the use of alternate materials, alternate design and method of construction?

REQUIREMENTS FOR INSIGNIA AND OTHER VEHICLE IDENTIFICATION

296-150R-0200 Who should obtain recreational vehicle insignia?
296-150R-0210 How do I obtain insignia information and the forms you require?
296-150R-0220 How do I obtain insignia based on state-plan approval?
296-150R-0230 How do I obtain insignia based on self-certification approval?
296-150R-0250 How do I replace lost or damaged insignia?
296-150R-0280 What other vehicle identification is required?
296-150R-0290 When and where should the insignia and the vehicle identification label be attached to the vehicle?

STATE PLAN

296-150R-0300 What is required to obtain insignia based on state-plan approval?
296-150R-0310 What is required after I am approved as a state-plan manufacturer?

DESIGN PLAN

296-150R-0320 How do I apply for design-plan approval?
296-150R-0330 What is required for comprehensive design-plan approval?
296-150R-0340 What happens if you approve my design plan?
296-150R-0350 If my design plan is not approved, how much time do I have to submit a corrected plan?

QUALITY CONTROL PROGRAM/MANUAL

296-150R-0400 What constitutes an acceptable quality control program/manual for state-plan insignia?
296-150R-0410 How do I apply to have my quality control manual approved?
296-150R-0420 What happens if my quality control manual is approved?

DESIGN PLAN/QUALITY CONTROL MANUAL—REVIEW, CHANGE/ADDENDUM, EXPIRATION, AND RENEWAL

296-150R-0440 Do I need approval to change my design plan or quality control manual after I receive state-plan approval?
296-150R-0450 When does state-plan insignia approval expire?

INSPECTION

296-150R-0600 When does a manufacturer, individual builder, or a dealer need to request a vehicle inspection?
296-150R-0610 How do I request a vehicle inspection and what documentation is required?
296-150R-0620 What happens if my vehicle passes inspection?
296-150R-0630 What happens if my vehicle does not pass inspection?
296-150R-0640 Am I charged if I request an inspection but I am not prepared?

AUDIT

296-150R-0700 What does our annual quality control program audit for state-plan insignia include?

LOSS OF STATE-PLAN APPROVAL

296-150R-0710 Can you withdraw my state-plan insignia approval?
296-150R-0720 What happens if my state-plan insignia approval is withdrawn?

SELF-CERTIFICATION

AUDIT TO RECEIVE SELF-CERTIFICATION

296-150R-0800 What is required for self-certification?
296-150R-0810 What does the initial self-certification audit include?
296-150R-0820 How will I know if I am approved for self-certification?
296-150R-0830 What are the self-certification fees?

SELF-CERTIFICATION COMPREHENSIVE DESIGN PLAN/QUALITY CONTROL PROGRAM/QUALITY CONTROL MANUAL

296-150R-0840 What is required for comprehensive design plan approval for self-certification?
296-150R-0850 What constitutes an acceptable quality control program/manual for self-certification?
296-150R-0860 After becoming self-certified, do I need approval to change my comprehensive design plan?
296-150R-0870 After becoming self-certified, do I need approval to change my quality control manual?

AUDIT AFTER SELF-CERTIFICATION

296-150R-0900 When do you audit self-certified manufacturers?
296-150R-0910 After I am self-certified, what does an audit include?

LOSS OF SELF-CERTIFICATION

296-150R-0920 Can you withdraw my self-certification?
296-150R-0930 What happens if my self-certification is withdrawn?

VEHICLE ALTERATIONS

296-150R-1000 Who needs approval to alter a recreational vehicle?
296-150R-1010 Must I purchase a separate insignia for an alteration?
296-150R-1020 How do I apply for alteration approval and obtain the alteration insignia?

MANUFACTURER'S NOTICE TO THE DEPARTMENT

296-150R-2000 Must state-plan and self-certified manufacturers notify you if they manufacture at more than one location?
296-150R-2010 Must state-plan and self-certified manufacturers notify you if they change a business name or address?
296-150R-2020 Must state-plan and self-certified manufacturers notify you of a change in business ownership?
296-150R-2030 Must state-plan and self-certified manufacturers notify you of their Washington dealers?

RECREATIONAL VEHICLE AND PARK TRAILER FEES

296-150R-3000 Recreational vehicle fees.

WAC 296-150R-0010 Authority, purpose, and scope. (1) This chapter is authorized by RCW 43.22.335 through 43.22.434 and covers the requirements for:

(a) Obtaining state-plan or self-certified status if you manufacture recreational vehicles for sale or lease in Washington state.

(b) Obtaining state-plan or self-certified insignia if you manufacture recreational vehicles for sale or lease in Washington state.

(2) This chapter applies to:

(a) Manufacturers, dealers and individuals who build for sale, sell, or lease recreational vehicles in Washington state; and

(b) Manufacturers, dealers, and individuals who alter recreational vehicles for sale or lease in Washington state.

[Statutory Authority: RCW 43.22.340 and 43.22.420. 97-16-043, § 296-150R-0010, filed 7/31/97, effective 12/1/97. Statutory Authority: RCW 43.22.340, [43.22.]355, [43.22.]360, [43.22.]432, [43.22.]440 and [43.22.]480. 96-21-146, § 296-150R-0010, filed 10/23/96, effective 11/25/96.]

WAC 296-150R-0020 What definitions apply to this chapter? "Alteration" is the replacement, addition, modification, or removal of any equipment or material that affects the fire and life safety provisions, plumbing systems, fuel systems and equipment or electrical systems of a recreational vehicle.

The following changes are not considered alterations for purposes of this chapter:

• Repairs with approved parts;

• Modification of a fuel burning appliance according to the terms of its listing; and

• Adjustment and maintenance of equipment.

"Alteration insignia" is an insignia which indicates a vehicle alteration was approved by the department.

"ANSI" is the American National Standards Institute, Inc., and the institute's rules applicable to recreational vehicles. For the purposes of this chapter, references to ANSI mean ANSI A119.2 Recreational Vehicles, 2002 edition.

"Approved" is approved by the department of labor and industries.

"Audit" by the department can be either a comprehensive audit or a performance audit. A comprehensive audit is the department inspection of a manufacturer's quality control procedures, comprehensive plans, and vehicles. A performance audit is the department's review of the manufacturer's audit performed by the industry association or other independent auditor.

"Comprehensive design plan" consists of the design plans and copies of drawings such as:

• Floor plans relating to fire and life safety, electrical, plumbing, liquefied petroleum (LP) and/or natural gas systems and appliances and air conditioning systems, if applicable to the plan of each vehicle.

• Plumbing line drawings which describe the size, length and location of gas piping lines, liquid and body waste lines, liquid and body waste tanks, and potable water tanks.

• Electrical drawings. (See WAC 296-150R-0330 and 296-150R-0820.)

"Consumer" is a person or organization who buys or leases recreational vehicles.

"Dealer" is a person or organization whose business is offering recreational vehicles for sale or lease.

"Department" is the department of labor and industries. The department may be referred to as "we" or "us" in this chapter. Note: You may contact us at: Department of Labor and Industries, Specialty Compliance, PO Box 44430, Olympia, WA 98504-4430.

"Equipment" is all material, appliances, fixtures, and accessories used in the manufacture or alteration of recreational vehicles or park trailers.

"Manual" is a reference containing instructions, procedures, responsibilities and other information used to implement and maintain the quality control program of a recreational vehicle manufacturer.

"National Electrical Code" see Chapter 2 of ANSI A119.2 for reference to the appropriate edition to use for compliance.

"Quality control" is the plan and method for ensuring that the manufacture, fabrication, assembly, installation, storing, handling, and use of materials complies with this chapter and ANSI.

"Recreational vehicle" is a vehicular type unit primarily designed as temporary living quarters for recreational camping, travel, or seasonal use that either has its own motive power or is mounted on, or towed by, another vehicle. Recre-

ational vehicles include: Camping trailers, fifth-wheel trailers, motor homes, travel trailers, and truck campers.

"Self-certification insignia" is an insignia which is obtained under the self-certification approval process.

"State-plan insignia" is an insignia which is obtained under the state design-plan approval process.

"System" is a part of a recreational vehicle that is designed to serve a particular function such as plumbing, electrical, heating, or mechanical system.

"Vehicle" for the purposes of this chapter, is a recreational vehicle.

[Statutory Authority: RCW 43.22.340, 43.22.400, 43.22.432, 43.22.433, 43.22.434, 43.22.480, and 43.22.485, 2002 c 268, and chapter 43.22 RCW. 03-12-044, § 296-150R-0020, filed 5/30/03, effective 6/30/03. Statutory Authority: RCW 43.22.340 and 43.22.480. 99-13-010, § 296-150R-0020, filed 6/4/99, effective 7/5/99. Statutory Authority: RCW 43.22.340 and 43.22.420. 97-16-043, § 296-150R-0020, filed 7/31/97, effective 12/1/97. Statutory Authority: RCW 43.22.340, [43.22.]355, [43.22.]360, [43.22.]432, [43.22.]440 and [43.22.]480. 96-21-146, § 296-150R-0020, filed 10/23/96, effective 11/25/96.]

WAC 296-150R-0030 How is this chapter enforced? (1) We enforce this chapter through:

(a) The state plan insignia approval process (see WAC 296-150R-0300 through 296-150R-0720); or

(b) The self-certification insignia approval process (see WAC 296-150R-0800 through 296-150R-0930).

(2) Vehicle inspections occur where the recreational vehicles are manufactured, sold, or leased. We conduct inspections during normal work hours or at other reasonable times. We may require you to remove a part of the recreational vehicle in order to conduct our inspection.

[Statutory Authority: RCW 43.22.340 and 43.22.420. 97-16-043, § 296-150R-0030, filed 7/31/97, effective 12/1/97. Statutory Authority: RCW 43.22.340, [43.22.]355, [43.22.]360, [43.22.]432, [43.22.]440 and [43.22.]480. 96-21-146, § 296-150R-0030, filed 10/23/96, effective 11/25/96.]

WAC 296-150R-0040 Will you keep my manufacturing information confidential? We will only release manufacturing information, such as design plans, specifications, test results, and manuals, according to the Public Records Act (see RCW 42.17.310 (1)(h)) unless we are ordered to do so by a court or otherwise required by law.

[Statutory Authority: RCW 43.22.340 and 43.22.420. 97-16-043, § 296-150R-0040, filed 7/31/97, effective 12/1/97. Statutory Authority: RCW 43.22.340, [43.22.]355, [43.22.]360, [43.22.]432, [43.22.]440 and [43.22.]480. 96-21-146, § 296-150R-0040, filed 10/23/96, effective 11/25/96.]

WAC 296-150R-0050 Can you prohibit the sale or lease of my recreational vehicle? (1) We may prohibit the sale or lease of your recreational vehicle because it is unlawful for any person to sell, lease, or offer for sale a recreational vehicle within this state if it violates any of the requirements of this chapter (see RCW 43.22.345).

(2) If an inspection reveals that a recreational vehicle violates this chapter, we may post a notice prohibiting the sale or lease of the recreational vehicle.

[Statutory Authority: RCW 43.22.340 and 43.22.480. 99-13-010, § 296-150R-0050, filed 6/4/99, effective 7/5/99.]

WAC 296-150R-0060 Who handles consumer complaints about recreational vehicles? (1) Consumers may file complaints with us, if they have reason to believe a manufacturer and/or dealer is in violation of this chapter and ANSI.

(2) The complaint should be in writing and describe the items that may not comply with this chapter and ANSI.

(3) After we receive the complaint, we will send the manufacturer and/or the dealer a copy of the complaint. The manufacturer and/or dealer has thirty days to respond to the complaint.

(4) If we decide an inspection is warranted and specific code violation(s) are found during the inspection, the manufacturer or dealer is charged for the inspection.

[Statutory Authority: RCW 43.22.340 and 43.22.420. 97-16-043, § 296-150R-0060, filed 7/31/97, effective 12/1/97. Statutory Authority: RCW 43.22.340, [43.22.]355, [43.22.]360, [43.22.]432, [43.22.]440 and [43.22.]480. 96-21-146, § 296-150R-0060, filed 10/23/96, effective 11/25/96.]

WAC 296-150R-0100 What happens if I disagree with the department's decision regarding my compliance with this chapter and ANSI? (1) If we determine that you are in violation of this chapter and ANSI, you will receive a notice of noncompliance and we may withdraw your certification. (See WAC 296-150R-0710, 296-150R-0920.)

(2) If you disagree with our decision, you can send us a written request for a hearing, stating why you disagree.

(3) After we receive your hearing request, we will:

(a) Schedule a hearing within thirty days after we receive your request.

(b) Notify you of the time, date, and place for the hearing. If you fail to appear, your case will be dismissed.

(c) Hear your case.

(d) Send you written notice of our decision.

If you disagree with our decision, you may appeal it under the Administrative Procedure Act (chapter 34.05 RCW).

[Statutory Authority: RCW 43.22.340 and 43.22.420. 97-16-043, § 296-150R-0100, filed 7/31/97, effective 12/1/97. Statutory Authority: RCW 43.22.340, [43.22.]355, [43.22.]360, [43.22.]432, [43.22.]440 and [43.22.]480. 96-21-146, § 296-150R-0100, filed 10/23/96, effective 11/25/96.]

WAC 296-150R-0110 Do you have an advisory board to address recreational vehicle issues? The factory assembled structures (FAS) board advises us on issues relating to plumbing, heating, electrical, installation, alterations, inspections, and rules for recreational vehicles. (See RCW 43.22.420.)

[Statutory Authority: RCW 43.22.340 and 43.22.420. 97-16-043, § 296-150R-0110, filed 7/31/97, effective 12/1/97. Statutory Authority: RCW 43.22.340, [43.22.]355, [43.22.]360, [43.22.]432, [43.22.]440 and [43.22.]480. 96-21-146, § 296-150R-0110, filed 10/23/96, effective 11/25/96.]

WAC 296-150R-0120 Where can I obtain technical assistance regarding recreational vehicles? We provide field technical service to recreational vehicle manufacturers for an hourly fee (see WAC 296-150R-3000). Field technical service may include an evaluation, consultation, plan examination, interpretation, and clarification of technical data relat-

ing to the application of our rules. It does not include inspections.

[Statutory Authority: RCW 43.22.340 and 43.22.420. 97-16-043, § 296-150R-0120, filed 7/31/97, effective 12/1/97. Statutory Authority: RCW 43.22.340, [43.22.]355, [43.22.]360, [43.22.]432, [43.22.]440 and [43.22.]480. 96-21-146, § 296-150R-0120, filed 10/23/96, effective 11/25/96.]

WAC 296-150R-0130 Do you allow recreational vehicles to be displayed without an insignia? We allow one recreational vehicle to be displayed without an insignia, if you:

(1) Get written approval from us in advance of displaying the unit; we should receive your written request at least thirty days prior to display of the unit. Your request must include:

(a) The model and serial number of the unit;

(b) The location where the unit will be displayed; and

(c) The date(s) the unit will be displayed.

(2) Are licensed in Washington state through the department of licensing;

(3) Have your approval letter available at the display;

(4) Place three visible signs on the display unit:

(a) One at the main entry door;

(b) One inside the front of the unit; and

(c) One inside the back of the unit.

The signs must read: *Not For Sale - Display Only.*

The letters on the sign must be one inch or higher.

[Statutory Authority: RCW 43.22.340 and 43.22.420. 97-16-043, § 296-150R-0130, filed 7/31/97, effective 12/1/97. Statutory Authority: RCW 43.22.340, [43.22.]355, [43.22.]360, [43.22.]432, [43.22.]440 and [43.22.]480. 96-21-146, § 296-150R-0130, filed 10/23/96, effective 11/25/96.]

WAC 296-150R-0140 Do you allow the use of alternate materials, alternate design and method of construction? An applicant may apply for the use of alternate materials, alternate design and methods of construction different from the requirements of this chapter by filing a written request with the department.

(1) Responsibilities of applicant. The applicant must submit in writing the following information and sign and date the request.

(a) The applicant's name, address and phone number;

(b) The specific requirement or requirements from which the alternate material, alternate design or method of construction is requested;

(c) Justification that the requirements of this chapter cannot be met without using alternate materials, alternate design or method of construction;

(d) How the use of alternate materials, alternate design or method of construction will achieve the same result as the requirement and any specific alternative measures to be taken to show the alternate provides the same level of protection to life, safety and health as the requirements.

The department has a form that you may use for your request. Contact the department at the address shown in the definition section.

(2) Responsibilities of the department. The department will provide a written response to the applicant within thirty days of receipt of the written request. The written response will state the acceptance or denial of the request, including the reasons for the department's decision. At a minimum the department will base its decision based on:

(a) The applicant's request as described in subsection (1) of this section;

(b) Research into the request;

(c) Expert advice.

(3) Applicant's response to denials. The applicant may appeal the department's decision by following the procedure in WAC 296-150R-0100.

[Statutory Authority: RCW 43.22.340, 43.22.350, 43.22.355, 43.22.360, 43.22.400, 43.22.432, 43.22.433, 43.22.434, 43.22.450, 43.22.480, and 43.22.485. 00-17-148, § 296-150R-0140, filed 8/22/00, effective 9/30/00. Statutory Authority: RCW 43.22.340 and 43.22.480. 99-13-010, § 296-150R-0140, filed 6/4/99, effective 7/5/99.]

REQUIREMENTS FOR INSIGNIA AND OTHER VEHICLE IDENTIFICATION

WAC 296-150R-0200 Who should obtain recreational vehicle insignia? (1) If you manufacture recreational vehicles to be sold or leased in Washington, you must purchase either a state-plan or self-certified insignia for each vehicle.

(2) Individuals that build recreational vehicles to sell or lease in Washington must purchase an insignia.

(3) If you have a vehicle with either a state-plan or self-certified insignia and you plan to alter or have another person alter it, you must obtain an alteration insignia from us.

Note: You do not need to purchase our insignia if you manufacture recreational vehicles in Washington for sale outside the state.

[Statutory Authority: RCW 43.22.340 and 43.22.420. 97-16-043, § 296-150R-0200, filed 7/31/97, effective 12/1/97. Statutory Authority: RCW 43.22.340, [43.22.]355, [43.22.]360, [43.22.]432, [43.22.]440 and [43.22.]480. 96-21-146, § 296-150R-0200, filed 10/23/96, effective 11/25/96.]

WAC 296-150R-0210 How do I obtain insignia information and the forms you require? Upon request, we will provide you with a packet of information that includes required forms and fee schedule for obtaining the state-plan or self-certified insignia. Our address is noted in the definition of department.

[Statutory Authority: RCW 43.22.340, [43.22.]355, [43.22.]360, [43.22.]432, [43.22.]440 and [43.22.]480. 96-21-146, § 296-150R-0210, filed 10/23/96, effective 11/25/96.]

WAC 296-150R-0220 How do I obtain insignia based on state-plan approval? (1) If you are approved to purchase insignia based on state-plan approval, you may purchase the insignia by submitting the insignia application with the required fees. (See WAC 296-150R-3000.)

(2) The application must include:

(a) A signed statement from you certifying that you are manufacturing your units according to your approved design plans and your quality control program; and

(b) A list of the approved design plans against which you will apply the insignia.

[Statutory Authority: RCW 43.22.340, [43.22.]355, [43.22.]360, [43.22.]432, [43.22.]440 and [43.22.]480. 96-21-146, § 296-150R-0220, filed 10/23/96, effective 11/25/96.]

WAC 296-150R-0230 How do I obtain insignia based on self-certification approval? If you are approved to purchase insignia based on self-certification approval, you may purchase the insignia by submitting the insignia application with the required fees. (See WAC 296-150R-3000.) The application must include the design plan with a signed statement from you certifying that you are manufacturing your units according to your comprehensive design plans and your quality control program.

[Statutory Authority: RCW 43.22.340, [43.22.]355, [43.22.]360, [43.22.]432, [43.22.]440 and [43.22.]480. 96-21-146, § 296-150R-0230, filed 10/23/96, effective 11/25/96.]

WAC 296-150R-0250 How do I replace lost or damaged insignia? (1) If an insignia is lost or damaged after it is placed on a recreational vehicle and you are the manufacturer or owner, you must notify us in writing immediately.

(2) Your notification should include the following information:

(a) Your name, address, and telephone number;

(b) The vehicle identification number or serial number and model;

(c) The insignia number and design-plan approval number, if applicable; and

(d) The required fee. (See WAC 296-150R-3000.)

(3) If we can determine that your unit previously had an insignia, we will attach the insignia to your vehicle once we receive your insignia fee. (See WAC 296-150R-3000.)

[Statutory Authority: RCW 43.22.340 and 43.22.420. 97-16-043, § 296-150R-0250, filed 7/31/97, effective 12/1/97. Statutory Authority: RCW 43.22.340, [43.22.]355, [43.22.]360, [43.22.]432, [43.22.]440 and [43.22.]480. 96-21-146, § 296-150R-0250, filed 10/23/96, effective 11/25/96.]

WAC 296-150R-0280 What other vehicle identification is required? Every *new* recreational vehicle manufactured, offered for sale or lease, or sold or leased in Washington must also have a vehicle identification number (VIN) label in compliance with the Federal Department of Transportation (DOT) safety standards.

Note: Truck campers do not require a vehicle identification number (VIN). They have a manufacturer's serial number.

[Statutory Authority: RCW 43.22.340 and 43.22.420. 97-16-043, § 296-150R-0280, filed 7/31/97, effective 12/1/97. Statutory Authority: RCW 43.22.340, [43.22.]355, [43.22.]360, [43.22.]432, [43.22.]440 and [43.22.]480. 96-21-146, § 296-150R-0280, filed 10/23/96, effective 11/25/96.]

WAC 296-150R-0290 When and where should the insignia and the vehicle identification label be attached to the vehicle? (1) Insignia must be attached to the finished vehicle before it leaves the approved manufacturer's location.

(2) The state-plan or self-certification insignia must be attached adjacent to the main door, on the strike side of the door, at least twelve inches above the floor line. The strike side of the door is opposite the hinge side of the door.

(3) The alteration insignia must be attached next to the certification insignia.

(4) The vehicle identification number (VIN) label must be attached on the vehicle as required by the Federal Department of Transportation. Any other vehicle identification label must be attached next to the certification insignia or on the exterior front half of the left side of the vehicle, at least six inches above the floor line.

[Statutory Authority: RCW 43.22.340, [43.22.]355, [43.22.]360, [43.22.]432, [43.22.]440 and [43.22.]480. 96-21-146, § 296-150R-0290, filed 10/23/96, effective 11/25/96.]

STATE PLAN

WAC 296-150R-0300 What is required to obtain insignia based on state-plan approval? If you want to obtain insignia based on state-plan approval, you must:

(1) Have your design plan and quality control manual approved by us; and

(2) Pass a quality control program comprehensive audit which includes a random inspection of your vehicles.

[Statutory Authority: RCW 43.22.340, [43.22.]355, [43.22.]360, [43.22.]432, [43.22.]440 and [43.22.]480. 96-21-146, § 296-150R-0300, filed 10/23/96, effective 11/25/96.]

WAC 296-150R-0310 What is required after I am approved as a state-plan manufacturer? Once you have obtained approval as a state-plan manufacturer:

(1) You are required to submit comprehensive design plans to us for approval;

(2) You can inspect your own vehicles based upon your quality control manual specifications; and

(3) You are subject to an annual comprehensive audit at your manufacturing location(s).

[Statutory Authority: RCW 43.22.340, [43.22.]355, [43.22.]360, [43.22.]432, [43.22.]440 and [43.22.]480. 96-21-146, § 296-150R-0310, filed 10/23/96, effective 11/25/96.]

DESIGN PLAN

WAC 296-150R-0320 How do I apply for design-plan approval? Upon request, we will send you a design-plan approval request form.

[Statutory Authority: RCW 43.22.340, [43.22.]355, [43.22.]360, [43.22.]432, [43.22.]440 and [43.22.]480. 96-21-146, § 296-150R-0320, filed 10/23/96, effective 11/25/96.]

WAC 296-150R-0330 What is required for comprehensive design-plan approval? If you are the manufacturer applying for state-plan approval:

(1) You must submit two sets of comprehensive design plans (do not send originals) to us for approval. Design plans must be accompanied by the initial filing fee, if appropriate, and the design plan fee. (See WAC 296-150R-3000.)

(2) Your comprehensive design plan must indicate compliance with the appropriate ANSI standards in the following plans and drawings:

(a) Floor plans relating to fire and life safety, electrical, plumbing, liquefied petroleum (LP) and/or natural gas systems and appliances, and air conditioning systems, if applicable, of each vehicle.

(b) Plumbing line drawings which describe the size, length and location of gas piping lines, liquid and body waste lines, liquid and body waste tanks, and potable water tanks.

(c) Electrical drawings.

Note: We will provide a check list with detailed requirements for each type of plan upon request.

(3) Current comprehensive design plans must be available at each manufacturing location.

(4) You must have an approved quality control manual. (See WAC 296-150R-0400, 296-150R-0410.)

Note: You do not need a quality control manual if you are an individual asking us to inspect a vehicle.

[Statutory Authority: RCW 43.22.340, [43.22.]355, [43.22.]360, [43.22.]432, [43.22.]440 and [43.22.]480. 96-21-146, § 296-150R-0330, filed 10/23/96, effective 11/25/96.]

WAC 296-150R-0340 What happens if you approve my design plan? (1) Your design plan will be approved if it complies with the requirements of this chapter and ANSI.

(2) We will send you an approved copy of the design plan with the approval number.

(3) You must keep copies of the approved design plan for all models produced at the manufacturing location.

(4) If your design plan is not approved, you will be notified in writing of plan deficiencies. You may send a corrected design plan to us.

[Statutory Authority: RCW 43.22.340, [43.22.]355, [43.22.]360, [43.22.]432, [43.22.]440 and [43.22.]480. 96-21-146, § 296-150R-0340, filed 10/23/96, effective 11/25/96.]

WAC 296-150R-0350 If my design plan is not approved, how much time do I have to submit a corrected plan? (1) You have ninety days to correct and resubmit your original design plan and send us the resubmittal fee once we notify you of plan deficiencies. After ninety days, your initial design plan is returned to you.

(2) If you submit your corrected design plan after ninety days, you must send the initial design plan fee instead of the resubmittal fee. (See WAC 296-150R-3000.)

[Statutory Authority: RCW 43.22.340, [43.22.]355, [43.22.]360, [43.22.]432, [43.22.]440 and [43.22.]480. 96-21-146, § 296-150R-0350, filed 10/23/96, effective 11/25/96.]

QUALITY CONTROL PROGRAM/MANUAL

WAC 296-150R-0400 What constitutes an acceptable quality control program/manual for state-plan insignia? Your quality control program must implement your approved quality control manual. The quality control manual must provide instructions, procedures, and assign responsibilities to assure quality control requirements are met when vehicles are manufactured. The minimum quality control manual requirements are:

(1) An organization chart which identifies quality assurance positions and describes quality control responsibilities and accountability for the following plant personnel: General manager, plant production manager, plant foreperson, lead persons, production, quality control, sales, engineering, purchasing, and receiving staff;

(2) A method to distribute all comprehensive design plans and installation instructions or other documentation that ensures all products used are installed correctly in all recreational vehicle models produced at each manufacturing location;

(3) Procedures for maintaining the quality assurance of each vehicle model;

(4) Drawings and procedures displaying manufacturing processes including a schematic plant layout;

(5) Descriptions of production stations, including surge-hold stations, on-site or off-site repair-rework locations, and off-line construction sites. Descriptions should identify by station and location the work, tests, or inspections performed and the job title of the person performing the quality control review;

(6) Inspection and equipment maintenance instructions, including jig maintenance, check-off lists, and other documentation verifying quality control performance and accountability;

(7) Coordination of staff duties ensuring smooth transition of manufacturing responsibilities during the shift change;

(8) Instructions regarding the identification, control, and handling of damaged goods or materials that do not comply with existing rules and ANSI;

(9) Information about recreational vehicle material storage and environmental control including protection from the weather and the elimination of scrap and age-dated materials which have exceeded their life;

(10) Verification that testing equipment is properly calibrated and that your gauges are accurate;

(11) Information about production line testing which includes descriptions of procedures, test equipment, and the location of each test. The information should demonstrate accountability for test completion, for rework and repair, and for retesting;

(12) Instructions, procedures, descriptions, and responsibilities for insignia storage, security, application, and inventory;

(13) Procedures for mixed production lines, for variable production rates, for new or substitute personnel, and for new or changed inspections and tests;

(14) Instructions, procedures, and responsibilities for keeping vehicle records which include the unit serial number, model, plan approval number, dealer location or destination, insignia number, inspection, and test results;

(15) Information about your quality control training program; and

(16) Procedures for introducing new designs, models, materials and equipment to staff that ensures products are built according to the standards and the manufacturer's instructions.

[Statutory Authority: RCW 43.22.340 and 43.22.420. 97-16-043, § 296-150R-0400, filed 7/31/97, effective 12/1/97. Statutory Authority: RCW 43.22.340, [43.22.]355, [43.22.]360, [43.22.]432, [43.22.]440 and [43.22.]480. 96-21-146, § 296-150R-0400, filed 10/23/96, effective 11/25/96.]

WAC 296-150R-0410 How do I apply to have my quality control manual approved? We will provide the form and instructions upon request.

[Statutory Authority: RCW 43.22.340, [43.22.]355, [43.22.]360, [43.22.]432, [43.22.]440 and [43.22.]480. 96-21-146, § 296-150R-0410, filed 10/23/96, effective 11/25/96.]

WAC 296-150R-0420 What happens if my quality control manual is approved? (1) Your quality control man-

ual will be approved if it meets the requirements of this chapter and ANSI.

(2) We will send you an approved copy of your quality control manual.

(3) If your quality control manual is not approved, you will be notified in writing of the deficiencies. You may send us a corrected quality control manual.

[Statutory Authority: RCW 43.22.340, [43.22.]355, [43.22.]360, [43.22.]432, [43.22.]440 and [43.22.]480. 96-21-146, § 296-150R-0420, filed 10/23/96, effective 11/25/96.]

DESIGN PLAN/QUALITY CONTROL MANUAL—REVIEW, CHANGE/ADDENDUM, EXPIRATION, AND RENEWAL

WAC 296-150R-0440 Do I need approval to change my design plan or quality control manual after I receive state-plan approval? (1) Once you have received state-plan approval and you want to change your design plan or quality control manual, we must approve the changes/addendums.

(2) You should send design plan or quality control manual changes to us thirty days before you want the changes/addendums to take effect.

[Statutory Authority: RCW 43.22.340, [43.22.]355, [43.22.]360, [43.22.]432, [43.22.]440 and [43.22.]480. 96-21-146, § 296-150R-0440, filed 10/23/96, effective 11/25/96.]

WAC 296-150R-0450 When does state-plan insignia approval expire? As a state-plan manufacturer, your approval for insignia is based upon approval of your design plan and quality control manual. Design plans are considered approved until a new ANSI code edition is adopted or unless revisions to ANSI prior to code changes would not support our design plan approval.

Note: ANSI codes are normally adopted for a three-year period.

[Statutory Authority: RCW 43.22.340, [43.22.]355, [43.22.]360, [43.22.]432, [43.22.]440 and [43.22.]480. 96-21-146, § 296-150R-0450, filed 10/23/96, effective 11/25/96.]

INSPECTION

WAC 296-150R-0600 When does a manufacturer, individual builder, or a dealer need to request a vehicle inspection? If you are a manufacturer, individual builder, or a dealer, you must request a vehicle inspection by us:

(1) If you have approval of your design plan and quality control manual and need to complete the state-plan process;

(2) If you are making a vehicle alteration which must be inspected and approved by us; or

(3) If you are correcting a violation which must be inspected and approved by us.

Note: An individual who is building a vehicle to own, sell, or lease must obtain a vehicle identification number from the state patrol prior to our issuance of certification insignia.

[Statutory Authority: RCW 43.22.340, [43.22.]355, [43.22.]360, [43.22.]432, [43.22.]440 and [43.22.]480. 96-21-146, § 296-150R-0600, filed 10/23/96, effective 11/25/96.]

WAC 296-150R-0610 How do I request a vehicle inspection and what documentation is required? (1) Complete an inspection application which can be obtained from us.

(2) Send the completed application, application fee, and inspection fee to us prior to the date you would like an inspection performed. (See WAC 296-150R-3000.)

(3) During the inspection, have your approved design plans, specifications, and test results available for our inspector.

(4) A vehicle inspection will be completed in two phases. The "cover" inspection during the construction of the unit before the electrical, plumbing, mechanical, heating, and structural systems are covered. The final inspection takes place after the vehicle is complete.

[Statutory Authority: RCW 43.22.340, [43.22.]355, [43.22.]360, [43.22.]432, [43.22.]440 and [43.22.]480. 96-21-146, § 296-150R-0610, filed 10/23/96, effective 11/25/96.]

WAC 296-150R-0620 What happens if my vehicle passes inspection? (1) If your vehicle passes inspection and you have met the other requirements of this chapter and ANSI, you will be approved to purchase state-plan insignia from us.

(2) If you send your insignia application and fee to us prior to the inspection, we will attach your insignia when we approve the vehicle.

[Statutory Authority: RCW 43.22.340, [43.22.]355, [43.22.]360, [43.22.]432, [43.22.]440 and [43.22.]480. 96-21-146, § 296-150R-0620, filed 10/23/96, effective 11/25/96.]

WAC 296-150R-0630 What happens if my vehicle does not pass inspection? (1) If your vehicle does not pass inspection, you will receive a notice of noncompliance.

(2) You have ten days after receiving the notice of noncompliance to send us a written response explaining how you will correct the violation(s) and prevent its reoccurrence.

(3) You are not allowed to move, sell or lease a vehicle until:

(a) You correct the violation(s);

(b) We inspect and approve the correction(s); and

(c) You pay the inspection fee and the insignia fee, if required. (See WAC 296-150R-3000.)

(4) If you fail to make the corrections, the sale or lease of your vehicle is prohibited by RCW 43.22.340 until the corrections are made.

Note: You will be allowed to return a vehicle to the manufacturing location or to another location for correction with our approval.

[Statutory Authority: RCW 43.22.340, [43.22.]355, [43.22.]360, [43.22.]432, [43.22.]440 and [43.22.]480. 96-21-146, § 296-150R-0630, filed 10/23/96, effective 11/25/96.]

WAC 296-150R-0640 Am I charged if I request an inspection but I am not prepared? (1) If you ask us to inspect recreational vehicles within Washington state but are not prepared when we arrive, you must pay the minimum inspection fee and travel.

(2) If you ask us to inspect recreational vehicles outside Washington state but are not prepared when we arrive, you must pay the minimum inspection fee, travel, and per diem expenses.

[Statutory Authority: RCW 43.22.340 and 43.22.420. 97-16-043, § 296-150R-0640, filed 7/31/97, effective 12/1/97. Statutory Authority: RCW 43.22.340, [43.22.]355, [43.22.]360, [43.22.]432, [43.22.]440 and [43.22.]480. 96-21-146, § 296-150R-0640, filed 10/23/96, effective 11/25/96.]

AUDIT

WAC 296-150R-0700 What does our annual quality control program audit for state-plan insignia include? (1) During your annual comprehensive audit for state-plan insignia, we will review your quality control program and randomly inspect your vehicles.

(2) If our comprehensive audit indicates that you are complying with the requirements of this chapter and ANSI, you may purchase state-plan insignia.

(3) If we discover a quality control program deficiency or a vehicle violation during our comprehensive audit, you will receive a notice of noncompliance and cannot purchase state-plan insignia until the deficiency or violation is corrected.

(a) You can correct the deficiency or violation during the comprehensive audit; or

(b) You have fourteen days after receiving the notice of noncompliance to send us a written response explaining your correction of the deficiency or violation;

(c) You are subject to a follow-up comprehensive audit.

[Statutory Authority: RCW 43.22.340, [43.22.]355, [43.22.]360, [43.22.]432, [43.22.]440 and [43.22.]480. 96-21-146, § 296-150R-0700, filed 10/23/96, effective 11/25/96.]

LOSS OF STATE-PLAN APPROVAL

WAC 296-150R-0710 Can you withdraw my state-plan insignia approval? Should you fail to meet the requirements of this chapter and ANSI after you have been approved to purchase state-plan insignia, we will withdraw your certification.

[Statutory Authority: RCW 43.22.340, [43.22.]355, [43.22.]360, [43.22.]432, [43.22.]440 and [43.22.]480. 96-21-146, § 296-150R-0710, filed 10/23/96, effective 11/25/96.]

WAC 296-150R-0720 What happens if my state-plan insignia approval is withdrawn? If your state-plan insignia approval is withdrawn because you have failed to comply with this chapter and ANSI:

(1) You must return any issued but unused insignia to us; and

(2) You cannot sell or lease vehicles in Washington.

[Statutory Authority: RCW 43.22.340, [43.22.]355, [43.22.]360, [43.22.]432, [43.22.]440 and [43.22.]480. 96-21-146, § 296-150R-0720, filed 10/23/96, effective 11/25/96.]

SELF-CERTIFICATION

AUDIT TO RECEIVE SELF-CERTIFICATION

WAC 296-150R-0800 What is required for self-certification? If you want to be self-certified, you must:

(1) Send us a written request for self-certification;

(2) Have us approve your self-certification quality control manual;

(3) Have us approve your comprehensive design plans for the current models you sell in Washington state if you do not already have approved design plans;

(4) Initially be audited by us, and then be audited at least every six months by an industry association or independent inspection auditor who conducts quality control audits;

(5)(a) The manufacturer must designate an industry association or other independent auditor to perform audits of the manufacturer at least every six months.

(b) The manufacturer must provide written approval from the auditor designated under (a) of this subsection and provide a copy of such approval to the department. The approval form must allow us to review all documentation and information collected by the auditor during the auditor's periodic audits of the manufacturer. The department shall conduct a performance audit of the industry association or other independent inspection auditor at least once every two years.

(c) If the designated auditor refuses to allow the department to conduct a performance audit, then the department may conduct a performance audit of the manufacturer's quality control program. If both the designated auditor and manufacturer refuse to allow a performance audit, then the department may conduct a comprehensive audit as authorized by RCW 43.22.355(4).

Note: If you do not use an industry association or independent inspection auditor to conduct your quality control audits, you may apply for insignia under the state-plan process for insignia approval.

[Statutory Authority: RCW 43.22.340, [43.22.]355, [43.22.]360, [43.22.]432, [43.22.]440 and [43.22.]480. 96-21-146, § 296-150R-0800, filed 10/23/96, effective 11/25/96.]

WAC 296-150R-0810 What does the initial self-certification audit include? During the initial self-certification comprehensive audit, we will:

(1) Review your quality control program;

(2) Review your comprehensive design plans; and

(3) Randomly inspect your vehicles.

[Statutory Authority: RCW 43.22.340, [43.22.]355, [43.22.]360, [43.22.]432, [43.22.]440 and [43.22.]480. 96-21-146, § 296-150R-0810, filed 10/23/96, effective 11/25/96.]

WAC 296-150R-0820 How will I know if I am approved for self-certification? (1) If the initial self-certification comprehensive audit indicates that you are complying with this chapter and ANSI, we will send you a self-certification approval letter. Once you are approved as self-certified you may purchase self-certification insignia.

(2) If we discover a quality control program deficiency or a vehicle violation during our initial audit, you will receive a notice of noncompliance and cannot purchase the self-certification insignia until the deficiency or violation is corrected.

(a) You can correct the deficiency or violation during the audit; or

(b) You have fourteen days after receiving the notice of noncompliance to send us a written response explaining your correction of the deficiency or violation;

(c) You are subject to a follow-up comprehensive audit, to verify correction of the deficiency or violation.

[Statutory Authority: RCW 43.22.340, [43.22.]355, [43.22.]360, [43.22.]432, [43.22.]440 and [43.22.]480. 96-21-146, § 296-150R-0820, filed 10/23/96, effective 11/25/96.]

WAC 296-150R-0830 What are the self-certification fees? (1) If you are a new manufacturer applying for self-certification, you must pay the initial filing fee, the quality control manual fee, the audit fee, travel and per diem expenses.

(2) If you are a current state-plan manufacturer applying for self-certification who has approved design plans with the department, you must pay the self-certification quality control manual fee, the audit fee, travel and per diem expenses.

[Statutory Authority: RCW 43.22.340, [43.22.]355, [43.22.]360, [43.22.]432, [43.22.]440 and [43.22.]480. 96-21-146, § 296-150R-0830, filed 10/23/96, effective 11/25/96.]

SELF-CERTIFICATION COMPREHENSIVE DESIGN PLAN/QUALITY CONTROL PROGRAM/QUALITY CONTROL MANUAL

WAC 296-150R-0840 What is required for comprehensive design plan approval for self-certification? (1) If you are a *new manufacturer* applying for self-certification:

(a) You must send us two sets of comprehensive design plans (do not send originals) for approval. Design plans must be accompanied by the appropriate fees. (See WAC 296-150R-3000.)

(b) Your comprehensive design plan must indicate compliance with the appropriate ANSI standards in the following plans and drawings:

(i) Floor plans relating to fire and life safety, electrical, plumbing, liquefied petroleum (LP) and/or natural gas systems and appliances, and air conditioning systems, if applicable to the plan of each vehicle.

(ii) Plumbing line drawings which describe the size, length and location of gas piping lines, liquid and body waste lines, liquid and body waste tanks, and potable water tanks.

(iii) Electrical drawings.

Note: We will provide you with a check list with detailed requirements for each type of plan upon request.

(c) Current comprehensive design plans must be available at each manufacturing location.

(2) If you are a state-plan approved manufacturer applying for self-certification, you must have approved comprehensive design plans on file with us and at each manufacturing location.

[Statutory Authority: RCW 43.22.340, [43.22.]355, [43.22.]360, [43.22.]432, [43.22.]440 and [43.22.]480. 96-21-146, § 296-150R-0840, filed 10/23/96, effective 11/25/96.]

WAC 296-150R-0850 What constitutes an acceptable quality control program/manual for self-certification? Your quality control program must implement your approved quality control manual. The quality control manual must provide instructions, procedures, and assign responsibilities to assure quality control expectations are met when vehicles are manufactured. The minimum quality control manual requirements are:

(1) An organization chart which identifies quality assurance positions and describes quality control responsibilities and accountability for the following plant personnel: General manager, plant production manager, plant foreperson, lead persons, production, quality control, sales, engineering, purchasing and receiving staff;

(2) A method to distribute all comprehensive design plans and installation instructions or other documentation that ensures all products used are installed correctly in all recreational vehicle models produced at each manufacturing location;

(3) Procedures for maintaining the quality assurance of each vehicle model;

(4) Drawings and procedures displaying manufacturing processes including a schematic plant layout;

(5) Descriptions of production stations, including surge-hold stations, on-site or off-site repair-rework locations, and off-line construction sites. Descriptions should identify by station and location the work, tests, or inspections performed and the job title of the person performing the quality control review;

(6) Inspection and equipment maintenance instructions, including jig maintenance, check-off lists, and other documentation verifying quality control performance and accountability;

(7) Coordination of staff duties ensuring smooth transition of manufacturing responsibilities during the shift change;

(8) Instructions regarding the identification, control, and handling of damaged goods or materials that do not comply with existing rules and ANSI;

(9) Information about recreational vehicle material storage and environmental control including protection from the weather and the elimination of scrap and age-dated materials which have exceeded their life;

(10) Verification that testing equipment is properly calibrated and that your gauges are accurate;

(11) Information about production line testing which includes descriptions of procedures, test equipment, and the location of each test. The information should demonstrate accountability for test completion, for rework and repair, and for retesting;

(12) Instructions, procedures, descriptions, and responsibilities for insignia storage, security, application, and inventory;

(13) Procedures for mixed production lines, for variable production rates, for new or substitute personnel, and for new or changed inspections and tests;

(14) Instructions, procedures, and responsibilities for keeping vehicle records which include the unit serial number, model, plan approval number (if applicable), dealer location or destination, insignia number, inspection, and test results;

(15) Information about your quality control training program;

(16) Procedures for introducing new designs, models, materials and equipment to staff that ensures products are built according to the standards and the manufacturer's instructions; and

(17) Written authorization as required in WAC 296-150R-0800(5).

[Statutory Authority: RCW 43.22.340 and 43.22.420. 97-16-043, § 296-150R-0850, filed 7/31/97, effective 12/1/97. Statutory Authority: RCW 43.22.340, [43.22.]355, [43.22.]360, [43.22.]432, [43.22.]440 and [43.22.]480. 96-21-146, § 296-150R-0850, filed 10/23/96, effective 11/25/96.]

WAC 296-150R-0860 After becoming self-certified, do I need approval to change my comprehensive design plan? (1) Once you are self-certified, you are not required to send us your comprehensive design plans nor are we required to approve your comprehensive design plan changes.

(2) You are required to maintain your comprehensive design plans for each model at each manufacturing location where the models are produced.

[Statutory Authority: RCW 43.22.340, [43.22.]355, [43.22.]360, [43.22.]432, [43.22.]440 and [43.22.]480. 96-21-146, § 296-150R-0860, filed 10/23/96, effective 11/25/96.]

WAC 296-150R-0870 After becoming self-certified, do I need approval to change my quality control manual? Once you are self-certified, you are required to have any changes to your quality control manual approved by us.

[Statutory Authority: RCW 43.22.340, [43.22.]355, [43.22.]360, [43.22.]432, [43.22.]440 and [43.22.]480. 96-21-146, § 296-150R-0870, filed 10/23/96, effective 11/25/96.]

AUDIT AFTER SELF-CERTIFICATION

WAC 296-150R-0900 When do you audit self-certified manufacturers? (1) We audit self-certified manufacturers, if we have reason to believe, you are not complying with this chapter and ANSI.

(2) Reasons to believe that you may not be complying with this chapter and ANSI may include, but are not limited to:

(a) Consolidation of manufacturing locations or relocation of your manufacturing plant;

(b) Complaints from dealers, consumers, or other interested parties that you are not complying with this chapter and ANSI;

(c) Change of business ownership; or

(d) Noncompliance with the requirements of this chapter.

(3) A comprehensive or performance audit based on WAC 296-150R-0800 (5)(c).

[Statutory Authority: RCW 43.22.340, [43.22.]355, [43.22.]360, [43.22.]432, [43.22.]440 and [43.22.]480. 96-21-146, § 296-150R-0900, filed 10/23/96, effective 11/25/96.]

WAC 296-150R-0910 After I am self-certified, what does an audit include? A performance audit after you are self-certified includes:

(1) A review of your quality control program;

(2) Verification that you are manufacturing vehicles according to this chapter and ANSI; and

(3) Verification that your comprehensive design plans are available at all locations where the vehicles are manufactured.

Note: Our audit may include a review of the comprehensive design plans at your manufacturing location.

[Statutory Authority: RCW 43.22.340, [43.22.]355, [43.22.]360, [43.22.]432, [43.22.]440 and [43.22.]480. 96-21-146, § 296-150R-0910, filed 10/23/96, effective 11/25/96.]

LOSS OF SELF-CERTIFICATION

WAC 296-150R-0920 Can you withdraw my self-certification? Should you fail to meet the requirements of this chapter and ANSI after you have been approved for self-certification, your self-certification can be withdrawn.

[Statutory Authority: RCW 43.22.340, [43.22.]355, [43.22.]360, [43.22.]432, [43.22.]440 and [43.22.]480. 96-21-146, § 296-150R-0920, filed 10/23/96, effective 11/25/96.]

WAC 296-150R-0930 What happens if my self-certification is withdrawn? If your self-certification is withdrawn because you have failed to comply with this chapter and ANSI:

(1) You must return any issued but unused insignia to us; and

(2) You cannot sell or lease vehicles in Washington.

[Statutory Authority: RCW 43.22.340, [43.22.]355, [43.22.]360, [43.22.]432, [43.22.]440 and [43.22.]480. 96-21-146, § 296-150R-0930, filed 10/23/96, effective 11/25/96.]

VEHICLE ALTERATIONS

WAC 296-150R-1000 Who needs approval to alter a recreational vehicle? (1) Any alteration by a manufacturer, dealer, or individual to a vehicle with state-certified insignia must be approved by us before the alteration is made. "Alteration" is defined in WAC 296-150R-0020.

(2) Any alteration by a manufacturer, dealer, or individual to a vehicle with self-certified insignia after it leaves the manufacturer's location must be approved by us before the alteration is made.

Note: We may remove your insignia if you alter or have someone alter a vehicle without our approval.

[Statutory Authority: RCW 43.22.340 and 43.22.420. 97-16-043, § 296-150R-1000, filed 7/31/97, effective 12/1/97. Statutory Authority: RCW 43.22.340, [43.22.]355, [43.22.]360, [43.22.]432, [43.22.]440 and [43.22.]480. 96-21-146, § 296-150R-1000, filed 10/23/96, effective 11/25/96.]

WAC 296-150R-1010 Must I purchase a separate insignia for an alteration? You are required to purchase an alteration insignia from us.

[Statutory Authority: RCW 43.22.340, [43.22.]355, [43.22.]360, [43.22.]432, [43.22.]440 and [43.22.]480. 96-21-146, § 296-150R-1010, filed 10/23/96, effective 11/25/96.]

WAC 296-150R-1020 How do I apply for alteration approval and obtain the alteration insignia? (1) To apply for alteration approval and the alteration insignia, you must:

(a) Complete an alteration permit form and an application for alteration insignia. We will provide the forms.

(b) Submit the completed forms, with the inspection fee and altered vehicle insignia fee, to us. (See WAC 296-150R-3000.)

(2) Our vehicle inspection of the alteration will be in two phases. The "cover" inspection during the alteration of the unit before the electrical, plumbing, mechanical, heating, or other systems are covered. The final inspection takes place after the vehicle is complete.

(3) Once we approve your alteration, we will attach the alteration insignia.

[Statutory Authority: RCW 43.22.340, [43.22.]355, [43.22.]360, [43.22.]432, [43.22.]440 and [43.22.]480. 96-21-146, § 296-150R-1020, filed 10/23/96, effective 11/25/96.]

MANUFACTURER'S NOTICE TO THE DEPARTMENT

WAC 296-150R-2000 Must state-plan and self-certified manufacturers notify you if they manufacture at more than one location? (1) We must approve each recreational vehicle manufacturing location producing units for sale or lease in Washington state.

(2) You must send us the following information for each manufacturing location when you are certified:

(a) Company name;

(b) Mailing and physical address;

(c) Phone and fax number if available;

(d) Type of recreational vehicle(s) manufactured;

(e) Contact person for plan review; and

(f) Contact person for plant audit.

(3) You must update the information as it changes.

[Statutory Authority: RCW 43.22.340 and 43.22.420. 97-16-043, § 296-150R-2000, filed 7/31/97, effective 12/1/97. Statutory Authority: RCW 43.22.340, [43.22.]355, [43.22.]360, [43.22.]432, [43.22.]440 and [43.22.]480. 96-21-146, § 296-150R-2000, filed 10/23/96, effective 11/25/96.]

WAC 296-150R-2010 Must state-plan and self-certified manufacturers notify you if they change a business name or address? (1) If you are moving your business from an approved manufacturing location, the new location must be approved before shipping units from that location for sale or lease in Washington state.

(2) You must notify us in writing prior to a change of business name or address.

[Statutory Authority: RCW 43.22.340, [43.22.]355, [43.22.]360, [43.22.]432, [43.22.]440 and [43.22.]480. 96-21-146, § 296-150R-2010, filed 10/23/96, effective 11/25/96.]

WAC 296-150R-2020 Must state-plan and self-certified manufacturers notify you of a change in business ownership? (1) When a recreational vehicle manufacturing business changes ownership, the new owner must notify us in writing immediately.

(2) A new owner may continue to manufacture vehicles using approved design plans or comprehensive design plans according to this chapter.

(3) The department will perform a comprehensive audit of the manufacturer after the ownership change to ensure you are meeting the requirements of this chapter and ANSI.

[Statutory Authority: RCW 43.22.340 and 43.22.420. 97-16-043, § 296-150R-2020, filed 7/31/97, effective 12/1/97. Statutory Authority: RCW 43.22.340, [43.22.]355, [43.22.]360, [43.22.]432, [43.22.]440 and [43.22.]480. 96-21-146, § 296-150R-2020, filed 10/23/96, effective 11/25/96.]

WAC 296-150R-2030 Must state-plan and self-certified manufacturers notify you of their Washington dealers? (1) You must send us the following information about yourself and each of your Washington dealers when you are certified:

(a) Dealership name;

(b) Mailing and physical address;

(c) Phone and fax number if available;

(d) Type of recreational vehicle(s); and

(e) Contact person.

(2) You must update this information as it changes.

[Statutory Authority: RCW 43.22.340, [43.22.]355, [43.22.]360, [43.22.]432, [43.22.]440 and [43.22.]480. 96-21-146, § 296-150R-2030, filed 10/23/96, effective 11/25/96.]

RECREATIONAL VEHICLE AND PARK TRAILER FEES

WAC 296-150R-3000 Recreational vehicle fees.

STATE PLAN	
INITIAL FILING FEE	$31.40
DESIGN PLAN FEES:	
NEW PLAN REVIEW FEE	$88.60
RESUBMITTAL FEE	$63.20
ADDENDUM (Approval expires on same date as original plan.)	$63.20
QUALITY CONTROL/MANUAL FEES:	
INITIAL APPROVAL	$11.90
RESUBMITTAL FEE	$63.20
ADDENDUM	$63.20
ELECTRONIC PLAN SUBMITTAL FEE $4.80 per page for the first set of plans and $0.30 per page for each additional set of plans. These fees are in addition to any applicable design plan fees required under this section.	
DEPARTMENT AUDIT FEES:	
AUDIT (per hour)*	$63.20
TRAVEL (per hour)*	$63.20
PER DIEM**	
HOTEL***	
MILEAGE**	
RENTAL CAR***	
PARKING	
AIRFARE***	
DEPARTMENT INSPECTION FEES:	
INSPECTION (per hour)*	$63.20
TRAVEL (per hour)*	$63.20
PER DIEM**	

HOTEL***	
MILEAGE**	
RENTAL CAR***	
PARKING***	
AIRFARE***	
ALTERATION INSPECTION (One hour plus insignia alteration fee)	$94.60
INSIGNIA FEES:	
STATE CERTIFIED	$11.30
ALTERATION	$31.40
REISSUED-LOST/DAMAGED	$11.30
OTHER FEES:	
FIELD TECHNICAL SERVICE (per hour* plus travel time* and mileage**)	$63.20
PUBLICATION PRINTING AND DISTRIBUTION OF RCWs AND WACs (One free copy per year)	$11.90
* Minimum charge of 1 hour; time spent greater than 1 hour is charged in 1/2 hour increments.	
** Per state guidelines.	
***Actual charges incurred.	

SELF CERTIFICATION	
INITIAL FILING FEE	$31.40
DESIGN PLAN FEES:	
NEW PLAN REVIEW FEE (one time fee)	$88.60
RESUBMITTAL FEE	$63.20
ADDENDUM (Approval expires on same date as original plan.)	$63.20
ELECTRONIC PLAN SUBMITTAL FEE $4.80 per page for the first set of plans and $0.30 per page for each additional set of plans. These fees are in addition to any applicable design plan fees required under this section.	
SELF CERTIFICATION/MANUAL FEES:	
INITIAL APPROVAL	$11.90
RESUBMITTAL FEE	$63.20
ADDENDUM	$63.20
DEPARTMENT AUDIT FEES:	
AUDIT (per hour)*	$63.20
TRAVEL (per hour)*	$63.20
PER DIEM**	
HOTEL***	
MILEAGE**	
RENTAL CAR***	
PARKING	
AIRFARE***	
DEPARTMENT INSPECTION FEES:	
INSPECTION (per hour)*	$63.20
TRAVEL (per hour)*	$63.20
PER DIEM**	
HOTEL***	
MILEAGE**	
RENTAL CAR***	
PARKING***	
AIRFARE***	
INSIGNIA FEES:	
SELF CERTIFIED	$11.30
ALTERATION	$31.40
REISSUED-LOST/DAMAGED	$11.30
OTHER FEES:	
FIELD TECHNICAL SERVICE (per hour* plus travel time* and mileage**)	$63.20
PUBLICATION PRINTING AND DISTRIBUTION OF RCWs AND WACs (One free copy per year)	$11.90
* Minimum charge of 1 hour; time spent greater than 1 hour is charged in 1/2 hour increments.	
** Per state guidelines.	
*** Actual charges incurred.	

[Statutory Authority: Chapters 18.27 and 43.22 RCW. 04-12-048, § 296-150R-3000, filed 5/28/04, effective 6/30/04. Statutory Authority: RCW 43.22.350, 43.22.434, 43.22.480, 43.22.500, 70.87.030, 18.106.070, 18.106.125, 2001 c 7, and chapters 18.106, 43.22, and 70.87 RCW. 03-12-045, § 296-150R-3000, filed 5/30/03, effective 6/30/03. Statutory Authority: RCW 43.22.350, 43.22.434, 43.22.480, 43.22.500, 18.27.040, 18.27.070, 18.27.075, 70.87.030, 19.28.041, 19.28.051, 19.28.101, 19.28.121, 19.28.161, 19.28.201, 19.28.211, 19.28.341, 2001 c 7, 2002 c 249, and chapters 19.28, 43.22, 18.27, and 70.87 RCW. 02-12-022, § 296-150R-3000, filed 5/28/02, effective 6/28/02. Statutory Authority: RCW 43.22.350, 43.22.434, 43.22.480, 43.22.500, 18.27.070, 18.27.075, 70.87.030, 19.28.041, 19.28.051, 19.28.101, 19.28.121, 19.28.161, 19.28.201, 19.28.211, 19.28.341, 2001 c 159, and chapters 43.22, 19.28, 18.27, and 70.87 RCW. 01-12-035, § 296-150R-3000, filed 5/29/01, effective 6/29/01. Statutory Authority: RCW 43.22.340, 43.22.350, 43.22.355, 43.22.360, 43.22.400, 43.22.432, 43.22.433, 43.22.434, 43.22.450, 43.22.480, and 43.22.485. 00-17-148, § 296-150R-3000, filed 8/22/00, effective 9/30/00. Statutory Authority: Chapters 43.22, 18.27, 70.87 and 19.28 RCW. 99-12-080, § 296-150R-3000, filed 5/28/99, effective 6/28/99. Statutory Authority: Chapters 18.106, 18.27 and 43.22 RCW. 98-12-041, § 296-150R-3000, filed 5/29/98, effective 6/30/98. Statutory Authority: RCW 43.22.340 and 43.22.420. 97-16-043, § 296-150R-3000,

filed 7/31/97, effective 12/1/97. Statutory Authority: RCW 43.22.340, [43.22.]355, [43.22.]360, [43.22.]432, [43.22.]440 and [43.22.]480. 96-21-146, § 296-150R-3000, filed 10/23/96, effective 11/25/96.]

Chapter 296-150T WAC

FACTORY-BUILT TEMPORARY WORKER HOUSING STRUCTURES

WAC

296-150T-0010 Authority, purpose, and scope.
296-150T-0020 What definitions apply to this chapter?
296-150T-0030 How is this chapter enforced?
296-150T-0040 Will you keep my manufacturing information confidential?
296-150T-0050 Can you prohibit the installation of factory-built temporary worker housing structures?
296-150T-0070 Do you have reciprocal agreements with other states to inspect factory-built temporary worker housing structures?
296-150T-0080 Do you allow a local enforcement agency to inspect factory-built temporary worker housing at the manufacturing location?
296-150T-0100 What happens if I disagree with your decision regarding my compliance with this chapter?
296-150T-0110 Do you have an advisory board to address factory-built temporary worker housing structure issues?
296-150T-0120 Where can I obtain technical assistance regarding factory-built temporary worker housing structures?
296-150T-0130 How do I register a complaint?
296-150T-0140 Do you allow the use of alternate materials, alternate design and method of construction?

INSIGNIA

296-150T-0200 Who must purchase factory-built temporary worker housing insignia?
296-150T-0210 What are the insignia requirements?
296-150T-0220 How do I obtain insignia information and the required forms?
296-150T-0230 What are the insignia application requirements?
296-150T-0250 How do I replace lost or damaged insignia?

DESIGN PLAN

296-150T-0300 When is design plan approval required?

DESIGN-PLAN APPROVAL

296-150T-0320 What must I provide with my request for design-plan approval by the department?
296-150T-0340 What must an engineering analysis for design plans include?
296-150T-0350 What must the test procedures and results for design plans include?
296-150T-0380 What happens if you approve my design plan?
296-150T-0390 If my design plan is not approved, how much time do I have to submit a corrected design plan?
296-150T-0400 What happens after my design plan is approved?
296-150T-0410 When does my design plan expire?

INSPECTIONS PRIOR TO ISSUANCE OF AN INSIGNIA

296-150T-0500 When is an inspection required?
296-150T-0510 How do I request an inspection?
296-150T-0520 What happens if my factory-built temporary worker housing structure passes inspection?
296-150T-0530 Am I charged if I request an inspection but I am not prepared?
296-150T-0540 Who inspects factory-built temporary worker housing structures for installation at the temporary worker housing site?
296-150T-0550 Do you notify the department of health after your final inspection of factory-built structures at a manufacturing location?

USED FACTORY-BUILT STRUCTURES WITHOUT AN INSIGNIA

296-150T-0580 Must I obtain an insignia for used factory-built structures?
296-150T-0590 How do I obtain insignia for used factory-built structures?

CODES FOR FACTORY-BUILT TEMPORARY WORKER HOUSING

296-150T-0600 What manufacturing codes apply to factory-built temporary worker housing?

MANUFACTURER'S NOTICE TO THE DEPARTMENT

296-150T-0700 Must manufacturers of factory-built temporary worker housing structures notify you if they manufacture at more than one location?
296-150T-0710 Must manufacturers of factory-built temporary worker housing structures notify you of a change in business name or address?
296-150T-0720 Must manufacturers of factory-built temporary worker housing structures notify you of a change in business ownership?

FACTORY-BUILT TEMPORARY WORKER HOUSING FEES

296-150T-3000 Factory-built temporary worker housing fees.

WAC 296-150T-0010 Authority, purpose, and scope. (1) This chapter is authorized by RCW 43.22.420, 43.22.434 and 43.22.450 through 43.22.490 and 43.70.337, covering the construction and approval of factory-built temporary worker housing.

(2) This chapter applies to the approval:

(a) Of factory-built temporary worker housing structures; and

(b) After occupancy of a factory-built temporary worker housing structure, all inspections are done by the department of health.

[Statutory Authority: RCW 43.22.480. 99-12-079, § 296-150T-0010, filed 5/28/99, effective 6/28/99.]

WAC 296-150T-0020 What definitions apply to this chapter? "Approved" is approved by the department of labor and industries.

"Damaged in transit" is damage that effects the integrity of the structural design or damage to any other system referenced in the codes required by the temporary worker housing construction standard.

"Department" is the department of labor and industries. The department may also be referred to as "we" or "us" in this chapter. Note: You may contact us at: Department of Labor and Industries, Specialty Compliance, PO Box 44440, Olympia, WA 98504-4440.

"Department of health" is the state agency responsible for adopting by rule a "temporary worker housing construction standard." You may contact them for copies of the "temporary worker housing construction standards" at: Department of Health, PO Box 47852, Olympia, WA 98504-7852.

"Design option" is a design that a manufacturer may use as an option to its design plan.

"Design plan" is a plan for the construction of factory-built temporary worker housing that includes floor plans, elevation drawings, specifications, engineering data, or test results necessary for a complete evaluation of the design. The design plan expires one year after approval or when a new temporary worker housing construction standard becomes effective or the electrical code as adopted by chapter 296-46 WAC adopts a new code. Electrical code changes if minor may be made by submitting an addendum.

"Equipment" is all material, appliances, devices, fixtures, fittings, or accessories used in the manufacture, assembly, installation, or alteration of factory-built temporary worker housing structures.

"Factory assembled structure (FAS) advisory board" is a board authorized to advise the director of the department regarding the issues and adoption of rules relating to factory-built temporary worker housing structures. (See RCW 43.22.420.)

"Factory-built temporary worker housing" is housing designed and constructed to the requirements in chapter 246-359 WAC, "temporary worker housing construction standard" as promulgated by the department of health for human occupancy. The structure which is entirely or substantially prefabricated or assembled at a place other than a building site. (See RCW 43.22.450(3).)

"Insignia" is a label that we attach to a structure to verify that a factory-built temporary worker housing structure meets the requirements of this chapter.

"Install" is to erect or set in place a structure at a building site. It may also be the construction or assembly of a component as part of a factory-built temporary worker housing.

"Listed" is a piece of equipment, a component, or an installation that appears in a list published by a testing or listing agency and is suitable for use in a specified manner.

"Listing agency" is an organization whose business is approving equipment, components, or installations for publication.

"Local enforcement agency" is the department of health with power to enforce regulations governing the installation of factory-built temporary worker housing.

"Manufacturing" is making, fabricating, forming, or assembling a factory-built temporary worker housing structure.

"Repair" is the replacement, addition, modification, or removal of any construction, equipment, system, or installation to correct damage in transit or during on-site installation before occupancy.

"Unit" is a factory-built temporary worker structure.

[Statutory Authority: RCW 43.22.480. 99-12-079, § 296-150T-0020, filed 5/28/99, effective 6/28/99.]

WAC 296-150T-0030 How is this chapter enforced? (1) To enforce this chapter, we or another governmental inspection agency will inspect each factory-built temporary worker housing structure that is sited in Washington. Inspections will be conducted during normal work hours or at other reasonable times. (See WAC 296-150T-0070.)

(2) We will inspect each unit as required by the temporary worker housing construction standard and the electrical code. (See WAC 296-150T-0500.)

[Statutory Authority: RCW 43.22.480. 99-12-079, § 296-150T-0030, filed 5/28/99, effective 6/28/99.]

WAC 296-150T-0040 Will you keep my manufacturing information confidential? We will only release manufacturing information such as design plans, specifications, and test results according to the requirements of the Public Records Act (see RCW 42.17.310 (1)(h)) unless we are ordered to do so by a court or otherwise required by law.

[Statutory Authority: RCW 43.22.480. 99-12-079, § 296-150T-0040, filed 5/28/99, effective 6/28/99.]

WAC 296-150T-0050 Can you prohibit the installation of factory-built temporary worker housing structures? (1) We may prohibit the installation of factory-built temporary worker housing structures if they do not conform to the requirements of this chapter. (See RCW 43.22.465.)

(2) If an inspection reveals that a factory-built temporary worker hosing structure violates this chapter, we may obtain a temporary injunction enjoining the installation of any nonconforming structure. The injunction may be made permanent at the discretion of the court.

[Statutory Authority: RCW 43.22.480. 99-12-079, § 296-150T-0050, filed 5/28/99, effective 6/28/99.]

WAC 296-150T-0070 Do you have reciprocal agreements with other states to inspect factory-built temporary worker housing structures? (1) We may enter into reciprocal agreements with states who have construction standards that are equal to or greater than our standards for factory-built structures.

(2) When we have a reciprocal agreement with another state:

(a) The reciprocal state inspects factory-built temporary worker housing structures manufactured in that state before shipment into Washington to ensure compliance with our laws. After inspection, the reciprocal state applies our insignia.

(b) The department inspects factory-built structures manufactured in Washington before shipment into the reciprocal state to ensure compliance with their laws. After inspection, we apply the insignia of the reciprocal state.

(3) Reciprocal agreements shall remain on file.

[Statutory Authority: RCW 43.22.480. 99-12-079, § 296-150T-0070, filed 5/28/99, effective 6/28/99.]

WAC 296-150T-0080 Do you allow a local enforcement agency to inspect factory-built temporary worker housing at the manufacturing location? (1) A local enforcement agency (city or county), under contract with us, can inspect factory-built temporary worker housing. In some cases their contract may be limited to specific portions of an inspection at specified manufacturing locations.

(2) After approving a unit, the local enforcement agency will attach the insignia, which indicates the unit has passed inspection.

[Statutory Authority: RCW 43.22.480. 99-12-079, § 296-150T-0080, filed 5/28/99, effective 6/28/99.]

WAC 296-150T-0100 What happens if I disagree with your decision regarding my compliance with this chapter? (1) If we determine you are in violation of this chapter, you will receive a notice of noncompliance.

(2) If you disagree with our decision, you can send us a written request for a hearing, stating why you disagree.

(3) After we receive your hearing request, we will:

(a) Schedule a hearing within thirty days after we receive your request. The hearing and proceedings will be conducted according to the Administrative Procedure Act (chapter 34.05 RCW).

(b) Notify you of the time, date, and place for the hearing. If you fail to appear, your case will be dismissed.

(c) Hear your case.

(d) Send you written notice of our decision.

If you disagree with our decision, you may appeal it under the Administrative Procedure Act (chapter 34.05 RCW).

[Statutory Authority: RCW 43.22.480. 99-12-079, § 296-150T-0100, filed 5/28/99, effective 6/28/99.]

WAC 296-150T-0110 Do you have an advisory board to address factory-built temporary worker housing structure issues? The factory assembled structures (FAS) board advises us on issues relating to structural, plumbing, mechanical, electrical, installation, inspections, and rules for factory-assembled structures. (See RCW 43.22.420.)

[Statutory Authority: RCW 43.22.480. 99-12-079, § 296-150T-0110, filed 5/28/99, effective 6/28/99.]

WAC 296-150T-0120 Where can I obtain technical assistance regarding factory-built temporary worker housing structures? We provide field technical service to factory-built temporary worker housing manufacturers for an hourly fee. Field technical service may include an evaluation, consultation, plan examination, interpretation, and clarification of technical data relating to the application of our rules. It does not include inspections.

[Statutory Authority: RCW 43.22.480. 99-12-079, § 296-150T-0120, filed 5/28/99, effective 6/28/99.]

WAC 296-150T-0130 How do I register a complaint? A person who believes that a structure or component does not meet the requirements of this chapter may register a complaint with the department. The complaint must be in writing and must specifically describe the alleged violations of this chapter. Upon receipt of the complaint, the department will forward a copy to the appropriate manufacturer and/or dealer and they shall have thirty days to respond to it. If the department determines that an inspection is necessary, the manufacturer/dealer shall pay the department for the cost of the inspection. The cost of the inspection is based upon the fee schedule in WAC 296-150T-3000 and includes the hourly inspection fee, travel costs and other expenses incurred as a result of the inspection.

[Statutory Authority: RCW 43.22.480. 99-12-079, § 296-150T-0130, filed 5/28/99, effective 6/28/99.]

WAC 296-150T-0140 Do you allow the use of alternate materials, alternate design and method of construction? An applicant may apply for the use of alternate materials, alternate design and methods of construction different from the requirements of this chapter by filing a written request with the department.

(1) Responsibilities of applicant. The applicant must submit in writing the following information and sign and date the request.

(a) The applicant's name, address and phone number;

(b) The specific requirement or requirements from which the alternate material, alternate design or method of construction is requested;

(c) Adequate justification that the requirements of this chapter cannot be met without using alternate materials, alternate design or method of construction;

(d) How the use of alternate materials, alternate design or method of construction will achieve the same result as the requirement and any specific alternative measures to be taken to show the alternate provides the same level of protection to life, safety and health as the requirements.

The department has a form that you may use for your request. Contact the department at the address shown in the definition section.

(2) Responsibilities of the department. The department will provide a written response to the applicant within thirty days of receipt of the written request. The written response will state the acceptance or denial of the request, including the reasons for the department's decision. At a minimum the department will base its decision based on:

(a) The applicant's request as described in subsection (1) of this section;

(b) Research into the request;

(c) Expert advice.

(3) Applicant's response to denials. The applicant may appeal the departments decision by following the procedure in WAC 296-150T-0100.

[Statutory Authority: RCW 43.22.480. 99-12-079, § 296-150T-0140, filed 5/28/99, effective 6/28/99.]

INSIGNIA

WAC 296-150T-0200 Who must purchase factory-built temporary worker housing insignia? (1) You must obtain insignia from us for each factory-built temporary worker hosing unit sited in Washington state.

(2) You must have an approved design plan and have passed inspection before an insignia can be attached to your factory-built temporary worker housing structure by us or our authorized agent.

(3) If a unit is damaged in transit after leaving the manufacturing location or during an on-site installation, and a repair is necessary, you must purchase a new insignia from us. The new insignia indicates that the unit was repaired.

[Statutory Authority: RCW 43.22.480. 99-12-079, § 296-150T-0200, filed 5/28/99, effective 6/28/99.]

WAC 296-150T-0210 What are the insignia requirements? (1) If you are applying for insignia for factory-built temporary worker housing structures you must have your design plan approved and your units inspected and approved by us.

(2) We will attach the insignia after:

(a) We receive the required forms and fees from you (see WAC 296-150T-3000); and

(b) Your unit or component has passed final inspection. (See WAC 296-150T-0500.)

[Statutory Authority: RCW 43.22.480. 99-12-079, § 296-150T-0210, filed 5/28/99, effective 6/28/99.]

WAC 296-150T-0220 How do I obtain insignia information and the required forms? Upon request, we will provide you with a packet of information that includes the required forms.

[Statutory Authority: RCW 43.22.480. 99-12-079, § 296-150T-0220, filed 5/28/99, effective 6/28/99.]

WAC 296-150T-0230 What are the insignia application requirements? (1) If you are requesting insignia for units that you intend to manufacture under a *new design plan*, your completed application must include:

(a) A completed design plan approval request form;

(b) One complete set of design plans, specifications, engineering analysis if required, test procedures and results if required, plus one additional set for each manufacturing location where the design plan will be used;

(c) If required, at least one set of design plans must have an original wet stamp from a professional engineer or architect licensed in Washington state. We will retain the set with the original wet stamp; and

(d) A one-time initial filing fee, the design plan fee (if we approve your design plan) and the fee for each insignia. (See WAC 296-150T-3000.)

(2) If you are requesting insignia under an *approved design plan*, your completed application must include:

(a) A completed application for insignia form; and

(b) The fee for each insignia requested. (See WAC 296-150T-3000.)

[Statutory Authority: RCW 43.22.480. 99-12-079, § 296-150T-0230, filed 5/28/99, effective 6/28/99.]

WAC 296-150T-0250 How do I replace lost or damaged insignia? (1) If an insignia is lost or damaged after it is attached to your factory-built temporary worker housing structure you may obtain a replacement insignia.

(2) You should contact us and provide the following information:

(a) Your name, address, and telephone number;

(b) The name of the manufacturer;

(c) The serial number;

(d) The manufacturer number (T#), if available;

(e) The insignia number, if available; and

(f) The required fee. (See WAC 296-150T-3000.)

(3) If we can determine that your unit previously had an insignia, we will attach an insignia to your unit once we receive your insignia fee. (See WAC 296-150T-3000.)

[Statutory Authority: RCW 43.22.480. 99-12-079, § 296-150T-0250, filed 5/28/99, effective 6/28/99.]

DESIGN PLAN

WAC 296-150T-0300 When is design plan approval required? Design plans for factory-built temporary worker housing structures prior to installation at the building site in Washington must be approved when:

(1) You build a new unit;

(2) You modify an approved design plan through an addendum; or

(3) You add options to an approved design plan through an addendum.

[Statutory Authority: RCW 43.22.480. 99-12-079, § 296-150T-0300, filed 5/28/99, effective 6/28/99.]

DESIGN-PLAN APPROVAL

WAC 296-150T-0320 What must I provide with my request for design-plan approval by the department? All requests for design-plan approval must include:

(1) A completed design-plan approval request form;

(2) One complete set of design plans, specifications, engineering analysis when required, test procedures and results plus one additional set for each manufacturing location where the design plan will be used (see WAC 296-150T-0340 and 296-150T-0350);

(3) If required, at least one set of design plans must have an original wet stamp from a professional engineer or architect licensed in Washington state. All new, renewed, and resubmitted plans, specifications, reports and structural calculations prepared by or prepared under his or her direct supervision shall be signed, dated and stamped with their seal. Specifications, reports, and structural calculations may be stamped only on the first sheet, provided this first sheet identifies all of the sheets that follow are included and identified in the same manner. Plans that have not been prepared by or under the engineer's or architect's supervision shall be reviewed by them and they shall prepare a report concerning the plans reviewed. This report shall:

(a) Identify which drawings have been reviewed by drawing number and date;

(b) Include a statement that the plans are in compliance with current Washington state regulations; and

(c) The report shall be stamped and signed by the reviewer.

Any deficiencies shall be corrected on the drawings before submitting to the department or be included in the report and identify as to how they are to be corrected. This report shall be attached to the plan(s) that were reviewed. We will retain the set with the original wet stamp;

(4) A one-time initial filing fee and the design-plan fee (see WAC 296-150T-3000); and

(5) A "key drawing" to show the arrangement of modules if the plan covers three or more modules.

[Statutory Authority: RCW 43.22.480. 99-12-079, § 296-150T-0320, filed 5/28/99, effective 6/28/99.]

WAC 296-150T-0340 What must an engineering analysis for design plans include? (1) The engineering analysis if required must show that the structural design meets the requirements of this chapter.

(2) An engineering analysis if required must be conducted according to accepted engineering practices and must be signed by a professional engineer or architect licensed in Washington state.

[Statutory Authority: RCW 43.22.480. 99-12-079, § 296-150T-0340, filed 5/28/99, effective 6/28/99.]

WAC 296-150T-0350 What must the test procedures and results for design plans include? (1) Tests to a design for a factory-built temporary worker housing structure must be witnessed by a professional engineer or architect licensed in Washington state.

(2) Test reports must contain the following items:

(a) A description of the methods or standards that applied to the test;

(b) Drawings and a description of the item tested;

(c) A description of the test set-up;

(d) The procedure used to verify the correct load;

(e) The procedure used to measure each condition;

(f) Test data, including applicable graphs and observations of the characteristics and behavior of the item tested; and

(g) Analysis, comments, and conclusion.

(3) The written test procedures, results and conclusions must reference the applicable design plan.

[Statutory Authority: RCW 43.22.480. 99-12-079, § 296-150T-0350, filed 5/28/99, effective 6/28/99.]

WAC 296-150T-0380 What happens if you approve my design plan? (1) Your design plan will be approved if it meets the requirements of this chapter.

(2) We will send you an approved copy of the design plan with the design-plan approval number.

(3) You must keep copies of the approved design plan at each location where a factory-built temporary worker housing structure is built.

(4) If your design plan is not approved, you will be notified in writing of plan deficiencies. You may send a corrected design plan to us. (See WAC 296-150T-3000.)

[Statutory Authority: RCW 43.22.480. 99-12-079, § 296-150T-0380, filed 5/28/99, effective 6/28/99.]

WAC 296-150T-0390 If my design plan is not approved, how much time do I have to submit a corrected design plan? (1) You have ninety days to correct and resubmit your original design plan and send us the resubmittal fee after we notify you of plan deficiencies. After ninety days, your initial design plan is returned to you.

(2) If you submit your corrected design plan after ninety days, you must send the initial design plan fee instead of the resubmittal fee. (See WAC 296-150T-3000.)

[Statutory Authority: RCW 43.22.480. 99-12-079, § 296-150T-0390, filed 5/28/99, effective 6/28/99.]

WAC 296-150T-0400 What happens after my design plan is approved? Once your design plan is approved, we will inspect each related factory-built temporary worker housing structure.

[Statutory Authority: RCW 43.22.480. 99-12-079, § 296-150T-0400, filed 5/28/99, effective 6/28/99.]

WAC 296-150T-0410 When does my design plan expire? Your factory-built temporary worker housing design plan expires either one year after approval or when there is a code change. You must submit new design plans for approval when there is a change to the temporary worker housing construction standard. You may use your design plan to order insignia as long as they comply with the applicable codes.

All National Electrical Code amendments may be incorporated by an addendum to your design plan.

[Statutory Authority: RCW 43.22.480. 99-12-079, § 296-150T-0410, filed 5/28/99, effective 6/28/99.]

INSPECTIONS PRIOR TO ISSUANCE OF AN INSIGNIA

WAC 296-150T-0500 When is an inspection required? (1) Before we issue an insignia, each factory-built temporary worker housing structure must be inspected at the manufacturing location as many times as are required by the temporary worker housing construction standard. (See WAC 296-150T-0600.) Inspections may include:

(a) A "cover" inspection during construction of the unit before the electrical, plumbing, mechanical, and structural systems are covered;

(b) Insulation inspection, if installed;

(c) A final inspection after the factory-built temporary worker housing structure is complete;

Note: Each factory-built temporary worker housing structure must have a serial number to enable us to track inspections.

(2) If we discover a violation during inspection, we will issue a notice of noncompliance. You can correct the violation during the inspection. If you cannot correct the violation during inspection, you must leave the item uncovered until we approve your correction.

(3) After a unit is manufactured but before occupancy, we must inspect a factory-built temporary worker housing structure if it is damaged in transit to the building site or during on-site installation. This is considered a repair inspection. (See WAC 296-150T-0540.)

(4) Approved design plans must be available for all inspections.

(5) Once your unit is inspected and approved we will attach the insignia.

Note: We only inspect factory-built temporary worker housing structures before occupancy. After occupancy, the department of health agency is the inspection agency.

[Statutory Authority: RCW 43.22.480. 99-12-079, § 296-150T-0500, filed 5/28/99, effective 6/28/99.]

WAC 296-150T-0510 How do I request an inspection? (1) You must contact us, and we will let you know where your request for inspection should be submitted. Our address is noted in the definition of department.

(2) We must receive in-state inspection requests at least seven calendar days prior to the date that you want the inspection.

(3) We must receive out-of-state inspection requests at least fourteen calendar days prior to the date that you want the inspection.

[Statutory Authority: RCW 43.22.480. 99-12-079, § 296-150T-0510, filed 5/28/99, effective 6/28/99.]

WAC 296-150T-0520 What happens if my factory-built temporary worker housing structure passes inspection? (1) If your factory-built temporary worker housing structure passes inspection and you have met the other requirements of this chapter, we will attach the insignia.

(2) After our final inspection, we will send a notice to the local enforcement agency (NLEA) indicating whether further inspection is necessary. (See WAC 296-150T-0550.)

[Statutory Authority: RCW 43.22.480. 99-12-079, § 296-150T-0520, filed 5/28/99, effective 6/28/99.]

WAC 296-150T-0530 Am I charged if I request an inspection but I am not prepared? (1) If you ask us to inspect a factory-built temporary worker housing structure within Washington state but you are not prepared when we

arrive, you must pay the minimum inspection fee and travel. (See WAC 296-150T-3000.)

(2) If you ask us to inspect a factory-built home, commercial structure, or component outside Washington state but you are not prepared when we arrive, you must pay the minimum inspection fee, travel, and per diem expenses. (See WAC 296-150T-3000.)

[Statutory Authority: RCW 43.22.480. 99-12-079, § 296-150T-0530, filed 5/28/99, effective 6/28/99.]

WAC 296-150T-0540 Who inspects factory-built temporary worker housing structures for installation at the temporary worker housing site? (1) The department of health must approve the installation.

(2) The department of health may also request a set of design plans and specifications for the unit from you.

(3) After the unit is manufactured but before occupancy, we must inspect a factory-built temporary worker housing structure if it is damaged in transit to the temporary worker housing site or during on-site installation. This is considered a repair inspection.

Note: The department of health may not open the concealed construction of a factory-built temporary worker housing structure to inspect if our insignia is attached.

[Statutory Authority: RCW 43.22.480. 99-12-079, § 296-150T-0540, filed 5/28/99, effective 6/28/99.]

WAC 296-150T-0550 Do you notify the department of health after your final inspection of factory-built structures at a manufacturing location? After we perform a final inspection of a factory-built temporary worker housing structure we will send a notice to the department of health that:

(1) Specifies what connections, standards, and incomplete items the department of health must check when the unit is installed; and/or

(2) Estimates the expected time of arrival of the factory-built temporary worker housing structure to the site.

[Statutory Authority: RCW 43.22.480. 99-12-079, § 296-150T-0550, filed 5/28/99, effective 6/28/99.]

USED FACTORY-BUILT STRUCTURES WITHOUT AN INSIGNIA

WAC 296-150T-0580 Must I obtain an insignia for used factory-built structures? All used factory-built housing and commercial structures that are to be for temporary worker housing must have an insignia of approval from us prior to being installed as temporary worker housing.

[Statutory Authority: RCW 43.22.480. 99-12-079, § 296-150T-0580, filed 5/28/99, effective 6/28/99.]

WAC 296-150T-0590 How do I obtain insignia for used factory-built structures? We consider used factory-built housing and commercial structures as new structures for purposes of use as temporary worker housing and an insignia approval as temporary worker housing must be obtained. To obtain insignia, you must:

(1) Have the design plan approved by us (see WAC 296-150T-0300 through 296-150T-0480);

(2) Purchase insignia (see WAC 296-150T-0200 through 296-150T-0230); and

(3) Pass a unit inspection (see WAC 296-150T-0500 through 296-150T-0550).

Note: You will be required to open up as much of the construction of the unit as is necessary for inspection to show compliance with your approved design plan.

[Statutory Authority: RCW 43.22.480. 99-12-079, § 296-150T-0590, filed 5/28/99, effective 6/28/99.]

CODES FOR FACTORY-BUILT TEMPORARY WORKER HOUSING

WAC 296-150T-0600 What manufacturing codes apply to factory-built temporary worker housing? (1) All design, construction, installations, and alterations of factory-built temporary worker housing structures must conform with the following codes and the requirements of this chapter:

(a) The temporary worker housing construction code, chapter 246-359 WAC;

(b) The National Electrical Code as referenced in chapter 19.28 RCW and in chapter 296-46 WAC.

(2) All construction methods and installations must comply with chapter 246-359 WAC and use accepted engineering practices when used, provide minimum health and safety to the occupants of factory-built temporary worker housing structures and the public, and demonstrate journeyperson quality of work of the various trades.

(3) Requirements for any size, weight, or quality of material modified by the terms "minimum," "not less than," "at least," and similar expressions are minimum standards. The manufacturer may exceed these standards, provided the deviation does not result in inferior installation or defeat the purpose and intent of the standard.

Note: The codes, RCW's, and WAC's referenced in this rule are available for reference at the Washington State Library, the Washington State Law Library, and may be available at your local library.

[Statutory Authority: RCW 43.22.480. 99-12-079, § 296-150T-0600, filed 5/28/99, effective 6/28/99.]

MANUFACTURER'S NOTICE TO THE DEPARTMENT

WAC 296-150T-0700 Must manufacturers of factory-built temporary worker housing structures notify you if they manufacture at more than one location? (1) If you are manufacturing factory-built temporary worker housing structures at more than one location, approved design plans must be available at each manufacturing location.

(2) You are required to send us the following information for each manufacturing location:

(a) Company name;

(b) Mailing and physical address; and

(c) Phone and fax number if available.

(3) You must update this information as it changes.

[Statutory Authority: RCW 43.22.480. 99-12-079, § 296-150T-0700, filed 5/28/99, effective 6/28/99.]

WAC 296-150T-0710 Must manufacturers of factory-built temporary worker housing structures notify

you of a change in business name or address? (1) If you are moving, notify us in writing prior to a change of business name or address.

(2) Your notice must include the change of name and address.

[Statutory Authority: RCW 43.22.480. 99-12-079, § 296-150T-0710, filed 5/28/99, effective 6/28/99.]

WAC 296-150T-0720 Must manufacturers of factory-built temporary worker housing structures notify you of a change in business ownership? (1) When a manufacturer changes ownership, the new owner must notify us in writing immediately.

(2) A new owner may continue to manufacture the units according to a prior approved design plan if the prior owner releases the design plan.

[Statutory Authority: RCW 43.22.480. 99-12-079, § 296-150T-0720, filed 5/28/99, effective 6/28/99.]

FACTORY-BUILT TEMPORARY WORKER HOUSING FEES

WAC 296-150T-3000 Factory-built temporary worker housing fees.

INITIAL FILING FEE	$44.00
DESIGN PLAN FEES:	
INITIAL ONE YEAR DESIGN	$126.90
RENEWAL FEE	$44.00
RESUBMIT FEE	$63.20
ADDENDUM (Approval expires on same date as original plan)	$63.20
ELECTRONIC PLAN SUBMITTAL FEE $4.70 per page for the first set of plans and $0.30 per page for each additional set of plans. These fees are in addition to any applicable design plan fees required under this section.	
Supplemental submissions of plans (resubmittals, addendums, renewals, code updates, etc.) shall be charged per hour or fraction of an hour*	$75.00
APPROVAL OF EACH SET OF DESIGN PLANS BEYOND FIRST TWO SETS	$11.90
DEPARTMENT INSPECTION FEES	
INSPECTION/REINSPECTION (Per hour* plus travel time* and mileage**)	$63.20
TRAVEL (Per hour)*	$63.20
PER DIEM**	
HOTEL***	
MILEAGE**	
RENTAL CAR***	
PARKING***	
AIRFARE***	
DEPARTMENT AUDIT FEES:	
AUDIT (Per hour*)	$63.20
TRAVEL (Per hour*)	$63.20
PER DIEM**	
HOTEL***	
MILEAGE**	
RENTAL CAR***	
PARKING***	
AIRFARE***	
INSIGNIA FEES:	
FIRST SECTION	$177.90
EACH ADDITIONAL SECTION	$17.30
REISSUED-LOST/DAMAGED	$44.00
ELECTRICAL COMMERCIAL/INDUSTRIAL	
Electrical Service/feeders Ampacity	201 plus
Service/feeder	$184.30
Additional Feeder	$35.00
ELECTRICAL MULTIFAMILY RESIDENTIAL	
Electrical Service/feeders	201 plus
Service/feeder	$97.80
Additional Feeder	$25.00
OTHER FEES:	
FIELD TECHNICAL SERVICE (Per hour* plus travel time* and mileage**)	$63.20
PUBLICATION PRINTING AND DISTRIBUTION OF RCW'S AND WAC'S (One free per year)	$11.90
* Minimum charge of 1 hour; time spent greater than 1 hour is charged in 1/2 hour increments	
** Per state guidelines	
*** Actual charges incurred	

[Statutory Authority: Chapter 43.22 RCW and 2003 c 291. 05-01-102, § 296-150T-3000, filed 12/14/04, effective 2/1/05. Statutory Authority: Chapters 18.27 and 43.22 RCW. 04-12-048, § 296-150T-3000, filed 5/28/04, effective 6/30/04. Statutory Authority: RCW 43.22.350, 43.22.434, 43.22.480, 43.22.500, 70.87.030, 18.106.070, 18.106.125, 2001 c 7, and chapters 18.106, 43.22, and 70.87 RCW. 03-12-045, § 296-150T-3000, filed 5/30/03, effective 6/30/03. Statutory Authority: RCW 43.22.350, 43.22.434, 43.22.480, 43.22.500, 18.27.040, 18.27.070, 18.27.075, 70.87.030, 19.28.041, 19.28.051, 19.28.101, 19.28.121, 19.28.161, 19.28.201, 19.28.211, 19.28.341, 2001 c 7, 2002 c 249, and chapters 19.28, 43.22, 18.27, and 70.87 RCW. 02-12-022, § 296-150T-3000, filed 5/28/02, effective 6/28/02. Statutory Authority: RCW 43.22.350, 43.22.434, 43.22.480, 43.22.500, 18.27.070, 18.27.075, 70.87.030, 19.28.041, 19.28.051, 19.28.101, 19.28.121, 19.28.161, 19.28.201, 19.28.211, 19.28.341, 2001 c 159, and chapters 43.22, 19.28, 18.27, and 70.87 RCW. 01-12-035, § 296-150T-3000, filed 5/29/01, effective 6/29/01. Statutory Authority: RCW 43.22.480. 99-12-079, § 296-150T-3000, filed 5/28/99, effective 6/28/99.]

Chapter 296-150V WAC

CONVERSION VENDOR UNITS AND MEDICAL UNITS

WAC

296-150V-0010 Authority, purpose, and scope.
296-150V-0020 What definitions apply to this chapter?
296-150V-0030 How is this chapter enforced?
296-150V-0040 Is manufacturing information kept confidential?
296-150V-0050 Can you prohibit the sale or lease of a conversion vendor unit or medical unit?
296-150V-0060 Who handles consumer complaints about conversion vendor units or medical units?
296-150V-0070 Do you have reciprocal agreements with other states to inspect conversion vendor units and medical units?
296-150V-0080 Do you allow a local enforcement agency to inspect conversion vendor units and medical units at the manufacturing location?
296-150V-0100 What happens if I disagree with your decision regarding my compliance with this chapter?
296-150V-0110 Do you have an advisory board to address conversion vendor unit and medical unit issues?
296-150V-0120 Where can I obtain technical assistance regarding conversion vendor units or medical units?
296-150V-0140 Do you allow the use of alternate materials, design, or method of construction?
296-150V-0200 Who must obtain conversion vendor unit or medical unit insignia?
296-150V-0205 Can I obtain an exempt vendor/medical insignia?
296-150V-0210 What are the insignia requirements?
296-150V-0220 How do I obtain insignia information and the required forms?
296-150V-0230 What are the insignia application requirements?
296-150V-0240 What documentation do you need to perform an alteration inspection?
296-150V-0250 How do I replace lost or damaged insignia?
296-150V-0300 When is design-plan approval required?
296-150V-0310 Who can approve design plans?
296-150V-0320 What must I provide with my request for conversion vendor unit or medical unit design-plan approval by the department?
296-150V-0340 When is an engineering analysis or structural load test for design plans required?
296-150V-0350 What must test procedures and results for design plans include?
296-150V-0380 What happens if you approve my design plan?
296-150V-0390 If my design plan is not approved, how much time do I have to submit a corrected design plan?
296-150V-0400 What happens after my design plan is approved?
296-150V-0410 When does my design plan expire?
296-150V-0415 Who approves addendums to design plans?
296-150V-0500 When is an inspection required?
296-150V-0510 How do I request an inspection?
296-150V-0520 What happens if my conversion vendor unit or medical unit passes inspection?
296-150V-0530 Am I charged if I request an inspection but I am not prepared?
296-150V-0540 Who inspects a conversion vendor unit or medical unit installation at the building site or event location?
296-150V-0550 Do you allow a conversion vendor unit or medical unit to be completed at the installation site?
296-150V-0560 What happens if I receive a notice of noncompliance after inspection of the alteration to my conversion vendor unit or medical unit?
296-150V-0580 Must I obtain an insignia for used conversion vendor units or medical units?
296-150V-0590 How do I obtain insignia for used conversion vendor units or medical units?
296-150V-0700 Must manufacturers of conversion vendor units and medical units notify you if they manufacture at more than one location?
296-150V-0710 Must manufacturers of conversion vendor units and medical units notify you of a change in business name or address?
296-150V-0720 Must manufacturers of conversion vendor units and medical units notify you of a change in business ownership?
296-150V-0800 What codes apply to conversion vendor units or medical units?
296-150V-0930 When are structural load tests or structural calculations required?
296-150V-0950 What requirements apply to roof coverings?
296-150V-1040 Are there floor requirements?
296-150V-1070 What requirements apply to floor closure material?
296-150V-1090 What are the standards for equipment and installations?
296-150V-1100 What are the flame-spread limitations?
296-150V-1110 Combustible limitations.
296-150V-1120 What are the standards for wall and cabinet protection?
296-150V-1170 What are the light and ventilation requirements?
296-150V-1180 What requirements apply to conversion vendor unit exits on all units approved after December 31, 1999?
296-150V-1185 What exit door requirements apply to self-propelled medical unit exits?
296-150V-1190 Interior privacy locks.
296-150V-1303 How must storage batteries be installed in a conversion vendor unit or medical unit?
296-150V-1330 What are the mechanical requirements for a conversion vendor unit or medical unit?
296-150V-1350 What are the LPG system enclosure and mounting requirements for a conversion vendor unit or medical unit?
296-150V-1360 What are the fuel gas piping design requirements for a conversion vendor unit or medical unit?
296-150V-1380 Can gas tubing be concealed in a conversion vendor unit or medical unit?
296-150V-1390 What are the pipe-joint compound requirements for gas piping in a conversion vendor unit or medical unit?
296-150V-1400 What are the gas piping hanger and support requirements for a conversion vendor unit or medical unit?
296-150V-1410 What are the electrical bonding requirements for gas piping in a conversion vendor unit or medical unit?
296-150V-1420 How are gas supply connections in a conversion vendor unit or medical unit identified?
296-150V-1430 What requirements apply to gas piping system openings?
296-150V-1440 Are gas piping shut-off valves required in a conversion vendor unit or medical unit?
296-150V-1450 What requirements apply to testing for gas piping leaks before conversion vendor unit or medical unit appliances are connected?
296-150V-1460 What requirements apply to testing for gas piping leaks after conversion vendor unit or medical unit appliances are connected?
296-150V-1470 What are the requirements for appliance installations?
296-150V-1530 What general plumbing requirements apply?
296-150V-1540 What are the plumbing definitions?
296-150V-1550 What requirements apply to drain outlets?
296-150V-1560 What is the minimum clearance for drain outlets?
296-150V-1570 What requirements apply to water-supply connections?
296-150V-1580 What requirements apply to water heater relief valves and safety devices?
296-150V-1590 What requirements apply to waste holding tanks for conversion vendor units?
296-150V-1600 What are the requirements associated with medical and conversion vending units that have been manufactured and used outside the state according to RCW 43.22.380?
296-150V-3000 Conversion vendor units and medical units—Fees.

DISPOSITION OF SECTIONS FORMERLY CODIFIED IN THIS CHAPTER

296-150V-1220 What code and installation requirements apply to conversion vendor unit or medical unit electrical systems? [Statutory Authority: RCW 43.22.340, 43.22.350, 43.22.355, 43.22.360, 43.22.400, 43.22.432, 43.22.433, 43.22.434, 43.22.450, 43.22.480, and 43.22.485. 00-17-148, § 296-150V-1220, filed 8/22/00, effective 9/30/00. Statutory Authority: Chapter 43.22 RCW. 99-18-069, § 296-150V-1220, filed 8/31/99, effective 10/1/99.] Repealed by 03-12-044, filed 5/30/03, effective 6/30/03. Statutory Authority: RCW 43.22.340, 43.22.400, 43.22.432, 43.22.433, 43.22.434, 43.22.480, and 43.22.485, 2002 c 268, and chapter 43.22 RCW.

WAC 296-150V-0010 Authority, purpose, and scope. (1) This chapter is authorized by RCW 43.22.340 through 43.22.434 covering the construction, alteration, and approval of conversion vendor units and medical units sold, leased, or used in Washington state.

(2) This chapter applies to the approval of conversion vendor unit and medical unit manufacturers, dealers, and to any person who manufactures or alters the plumbing, mechanical, or electrical system of a conversion vendor unit or medical unit.

[Statutory Authority: Chapter 43.22 RCW. 99-18-069, § 296-150V-0010, filed 8/31/99, effective 10/1/99.]

WAC 296-150V-0020 What definitions apply to this chapter? "Alteration" is the replacement, addition, modification, or removal of any equipment or installation that affects the construction for concentrated floor loads, fire and life safety, or the plumbing, mechanical, and electrical systems of a conversion vendor unit or medical unit.

The following are not considered alterations:

• Repairs with approved parts;

• Modifications of a fuel-burning appliance according to the listing agency's specifications; or

• Adjustment and maintenance of equipment.

"Approved" is approved by the department of labor and industries.

"Consumer" is a person or organization, excluding a manufacturer or dealer of conversion vendor units or medical units, who buys or leases a conversion vendor unit or medical unit.

"Conversion vendor unit" means a motor vehicle or other structure that has been converted or built for the purpose of being used for commercial sales at temporary locations. The units must be 8 feet 6 inches or less in width (exterior floor measurement) in the set-up position, and the inside working area must be less than 40 feet in length (interior floor measurement). Conversion vendor units:

• Are transported in only one section;

• Are designed for highway use;

• Are temporarily occupied for distribution of items, e.g., food;

• Are built on a permanent chassis; and

• Include at least one of the following systems: Plumbing, mechanical or 120 and/or 240 volt electrical.

"Damaged in transit" means damage that affects the integrity of a concentrated floor load design or any of the systems.

"Dealer" is a person, company, or corporation whose business is leasing, selling, offering for lease or sale, buying, or trading conversion vendor units, or medical units.

"Department" is the department of labor and industries. The department may be referred to as "we" or "us" in this chapter. Note: You may contact us at: Department of Labor and Industries, Specialty Compliance, P.O. Box 44440, Olympia, WA 98504-4440.

"Design plan" is a plan for the construction or alteration of a conversion vendor unit or medical unit or conversion of a vehicle to a conversion vendor unit or medical unit including floor plans, specifications, or test results necessary for a complete evaluation of the design, if applicable.

"Design option" is a design that a manufacturer may use as an option to its conversion vendor unit or medical unit design plan.

"Equipment" is all material, appliances, devices, fixtures, fittings, or accessories used in the manufacture, assembly, conversion to, or alteration of a conversion vendor unit or medical unit.

"Factory assembled structure (FAS) advisory board" is a board authorized to advise the director of the department regarding the issues and adoption of rules relating to conversion vendor units and medical units.

"Insignia" is a label that we attach to a conversion vendor unit or medical unit to verify that the structure meets the requirements of this chapter and the applicable codes.

"Install" is to erect, construct, assemble, or set a conversion vendor unit or medical unit in place.

"Labeled" is to bear the department's insignia.

"Listed" is a piece of equipment or apparatus that has been approved by a testing agency to the appropriate standard.

"Local enforcement agency" is an agency of city or county government with power to enforce local regulations governing the installation of a conversion vendor unit or medical unit.

"Medical unit" is a type of self-propelled unit used to provide medical examinations, treatments, and medical and dental services or procedures, not including emergency response vehicles, and which:

• Is transportable;

• Is temporarily placed and used;

• Is built on a permanent chassis;

• Includes at least one system;

• Is for temporary use only.

"One-year design plan" is a design plan that expires one year after approval or when a new state building code has been adopted.

"System" is part of a conversion vendor unit or medical unit designed to serve a particular function. Examples include plumbing, electrical, or mechanical systems.

[Statutory Authority: RCW 43.22.340, 43.22.400, 43.22.432, 43.22.433, 43.22.434, 43.22.480, and 43.22.485, 2002 c 268, and chapter 43.22 RCW. 03-12-044, § 296-150V-0020, filed 5/30/03, effective 6/30/03. Statutory Authority: Chapter 43.22 RCW. 99-18-069, § 296-150V-0020, filed 8/31/99, effective 10/1/99.]

WAC 296-150V-0030 How is this chapter enforced? (1) To enforce this chapter, we or another governmental inspection agency will inspect each conversion vendor unit or

medical unit manufactured, sold, leased, or used in Washington state as required by this chapter.

(2) We will inspect all alterations.

(3) We will conduct inspections during normal work hours or at other reasonable times.

[Statutory Authority: Chapter 43.22 RCW. 99-18-069, § 296-150V-0030, filed 8/31/99, effective 10/1/99.]

WAC 296-150V-0040 Is manufacturing information kept confidential? We will only release manufacturing information such as design plans, specifications, and test results according to the requirements of the Public Records Act (see RCW 42.17.310 (1)(h)) unless we are ordered to do so by a court or otherwise required by law.

[Statutory Authority: Chapter 43.22 RCW. 99-18-069, § 296-150V-0040, filed 8/31/99, effective 10/1/99.]

WAC 296-150V-0050 Can you prohibit the sale or lease of a conversion vendor unit or medical unit? (1) We may prohibit the sale or lease of your conversion vendor unit or medical unit because it is unlawful for any person to sell, lease, or offer for sale a conversion vendor unit or medical unit within this state if it violates any of the requirements of this chapter.

(2) If an inspection reveals that a conversion vendor unit or medical unit violates this chapter, we may post a notice prohibiting the sale or lease of a conversion vendor unit or medical unit.

[Statutory Authority: Chapter 43.22 RCW. 99-18-069, § 296-150V-0050, filed 8/31/99, effective 10/1/99.]

WAC 296-150V-0060 Who handles consumer complaints about conversion vendor units or medical units? (1) Consumers may file complaints within one year of the date of manufacture.

(2) The complaint should be in writing and describe the item(s) that may not comply with this chapter.

(3) After we receive the complaint, we will send the manufacturer and the dealer a copy of the complaint.

(4) The manufacturer and/or dealer have thirty days to respond. We will base our actions on the response.

[Statutory Authority: Chapter 43.22 RCW. 99-18-069, § 296-150V-0060, filed 8/31/99, effective 10/1/99.]

WAC 296-150V-0070 Do you have reciprocal agreements with other states to inspect conversion vendor units and medical units? (1) We will enter into reciprocal agreements with states that have inspection standards equal or greater than our standard.

(2) When we have a reciprocal agreement with another state:

(a) The reciprocal state inspects the conversion vendor units and medical units manufactured in that state before shipment into Washington to ensure compliance with our laws. After inspection, the reciprocal state applies our insignia.

(b) The department inspects conversion vendor units and medical units manufactured in Washington before shipment into the reciprocal state to ensure compliance with their laws. After inspection, we apply the insignia of the reciprocal state.

(3) We have reciprocal agreements on file.

[Statutory Authority: Chapter 43.22 RCW. 99-18-069, § 296-150V-0070, filed 8/31/99, effective 10/1/99.]

WAC 296-150V-0080 Do you allow a local enforcement agency to inspect conversion vendor units and medical units at the manufacturing location? (1) A local enforcement agency (city or county), under contract with us, can inspect conversion vendor units and medical units. In some cases, another agency's contracts may be limited to specific portions of an inspection at specified manufacturing locations.

(2) After approving a unit, the local enforcement agency will attach the insignia which indicates that the unit has passed inspection.

[Statutory Authority: Chapter 43.22 RCW. 99-18-069, § 296-150V-0080, filed 8/31/99, effective 10/1/99.]

WAC 296-150V-0100 What happens if I disagree with your decision regarding my compliance with this chapter? (1) If we determine that you are in violation of this chapter, you will receive a notice of noncompliance.

(2) If you disagree with our decision, you can send us a written request for a hearing, stating why you disagree.

(3) After we receive your hearing request, we will:

(a) Schedule a hearing within thirty days after we receive your request;

(b) Notify you of the time, date, and place for the hearing. If you fail to appear, your case will be dismissed;

(c) Hear your case;

(d) Send written notice of our decision to you.

(4) If you disagree with our decision, you may appeal it under the Administrative Procedure Act, chapter 34.05 RCW.

[Statutory Authority: Chapter 43.22 RCW. 99-18-069, § 296-150V-0100, filed 8/31/99, effective 10/1/99.]

WAC 296-150V-0110 Do you have an advisory board to address conversion vendor unit and medical unit issues? The factory assembled structures (FAS) board advises us on issues relating to plumbing, mechanical, electrical, inspections, and rule adoption for conversion vendor units and medical units. (See RCW 43.22.420.)

[Statutory Authority: Chapter 43.22 RCW. 99-18-069, § 296-150V-0110, filed 8/31/99, effective 10/1/99.]

WAC 296-150V-0120 Where can I obtain technical assistance regarding conversion vendor units or medical units? We offer field technical service to conversion vendor unit and medical unit manufacturers for an hourly fee. (See WAC 296-150V-3000.) Field technical service may include evaluation, consultation, plan examination, interpretation, and clarification of technical data relating to the application of our rules. It does not include inspections.

[Statutory Authority: Chapter 43.22 RCW. 99-18-069, § 296-150V-0120, filed 8/31/99, effective 10/1/99.]

WAC 296-150V-0140 Do you allow the use of alternate materials, design, or method of construction? An applicant may apply for the use of alternate materials, design,

or methods of construction different from the requirements of this chapter by filing a written request with the department.

(1) **Responsibilities of the applicant.** The applicant must submit in writing the following information:

(a) Name, address, and phone number;

(b) The specific requirement or requirements from which the alternate material, design, or method of construction is requested;

(c) Justification that the requirements of this chapter cannot be met without using alternate materials, design, or method of construction;

(d) How the use of alternate materials, design, or method of construction will achieve the same result as the requirement and any specific alternative measures to be taken to show the alternate provides the same level of protection to life, safety and health as the requirements;

The department has a form that you may use for your request. Please contact us at the address shown in WAC 296-150V-0020, Definitions.

(2) **Responsibilities of the department.** The department will provide a written response to the applicant within thirty days of receipt of the written request. The written response will state the acceptance or denial of the request, including the reasons for the department's decision. At a minimum the department will base its decision on:

(a) The applicant's request as described in subsection (1) of this section;

(b) Research into the request;

(c) Expert advice.

(3) **Applicant's response to denials.** The applicant may appeal the department's decision by following the procedure in WAC 296-150V-0100.

[Statutory Authority: RCW 43.22.340, 43.22.350, 43.22.355, 43.22.360, 43.22.400, 43.22.432, 43.22.433, 43.22.434, 43.22.450, 43.22.480, and 43.22.485. 00-17-148, § 296-150V-0140, filed 8/22/00, effective 9/30/00. Statutory Authority: Chapter 43.22 RCW. 99-18-069, § 296-150V-0140, filed 8/31/99, effective 10/1/99.]

WAC 296-150V-0200 Who must obtain conversion vendor unit or medical unit insignia? (1) You must obtain an insignia from us for each conversion vendor unit or medical unit manufactured, sold, leased, or used in Washington state.

(2) You do not need an insignia for a conversion vendor unit or medical unit:

(a) When a unit has been used outside of the state for six months before being brought into Washington state (see RCW 43.22.380); or

(b) If a unit was manufactured prior to July 1, 1968. (See RCW 43.22.370.)

(3) You must obtain an insignia when conversion vendor units or medical units are altered in Washington state.

(4) You must obtain an alteration insignia when a conversion vendor unit or medical unit is damaged in transit after leaving the manufacturing location or during an on-site installation and an alteration or repair is necessary. The insignia indicates the conversion vendor unit or medical unit was altered or repaired.

(5) You must have an approved design plan and pass our inspection before we will attach an insignia.

Note: All conversion vendor units and medical units must have insignia if they are altered; this includes the exceptions in subsection (2)(a) and (b) of this section.

[Statutory Authority: Chapter 43.22 RCW. 99-18-069, § 296-150V-0200, filed 8/31/99, effective 10/1/99.]

WAC 296-150V-0205 Can I obtain an exempt vendor/medical insignia? For approval of an exempt vendor/medical insignia, you must complete a factory built structures alteration request with:

(1) Documentation that shows that the unit was used outside of the state for six months before being brought into Washington state (see RCW 43.22.380).

Types of documentation to include state or local health certificates.

(2) Payment of the factory built structures alteration permit and exempt insignia fee.

(3) Completion of a fire and life safety inspection.

[Statutory Authority: Chapter 43.22 RCW and 2003 c 291. 05-01-102, § 296-150V-0205, filed 12/14/04, effective 2/1/05.]

WAC 296-150V-0210 What are the insignia requirements? (1) If you are applying for insignia, you must have your design plan approved and your conversion vendor unit or medical unit inspected and approved by us.

(2) If you are a manufacturer, dealer, or owner applying for an alteration insignia, your alteration must be inspected and approved by us. Approval of the design plan may also be required.

(3) We will attach the insignia to your conversion vendor unit or medical unit after:

(a) We receive from you the required forms and fees listed in WAC 296-150V-3000; and

(b) Your conversion vendor unit or medical unit has passed final inspection.

[Statutory Authority: Chapter 43.22 RCW. 99-18-069, § 296-150V-0210, filed 8/31/99, effective 10/1/99.]

WAC 296-150V-0220 How do I obtain insignia information and the required forms? Upon request, we will provide you with a packet of information that includes the required forms. Our address is noted in the definition of "department" in WAC 296-150V-0020.

[Statutory Authority: Chapter 43.22 RCW. 99-18-069, § 296-150V-0220, filed 8/31/99, effective 10/1/99.]

WAC 296-150V-0230 What are the insignia application requirements? (1) If you are requesting insignia for conversion vendor units or medical units that you intend to manufacture under a new design plan, your completed application must include:

(a) A completed design plan approval request form;

(b) One complete set of design plans, specifications, engineering analysis and test procedures and results (when applicable), plus one additional set for each manufacturing location where the design plan will be used;

(c) At least one set of design plans must have an original wet stamp from a professional engineer or architect licensed in Washington state. We will retain the set with the original wet stamp; and

(d) A one-time initial filing fee, the design plan fee, and the fee for each insignia (see WAC 296-150V-3000).

(2) If you are requesting insignia under an approved design plan, your completed application must include:

(a) A completed insignia application form; and

(b) The fee for each conversion vendor unit or medical unit insignia (see WAC 296-150V-3000).

[Statutory Authority: Chapter 43.22 RCW. 99-18-069, § 296-150V-0230, filed 8/31/99, effective 10/1/99.]

WAC 296-150V-0240 What documentation do you need to perform an alteration inspection? If you alter a conversion vendor unit or medical unit, we must inspect the alteration.

(1) Before we perform an alteration inspection and attach an alteration insignia, you must send us:

(a) Description of the proposed alteration;

(b) The plan review fee;

(c) The inspection fee; and

(d) The insignia application and fee.

(2) A design plan review is not required if the alteration can be made without altering any of the existing structure.

Note: All fees are listed in WAC 296-150V-3000 at the end of this chapter.

[Statutory Authority: Chapter 43.22 RCW. 99-18-069, § 296-150V-0240, filed 8/31/99, effective 10/1/99.]

WAC 296-150V-0250 How do I replace lost or damaged insignia? (1) If an insignia is lost or damaged after it is placed on a conversion vendor unit or medical unit, you may obtain a replacement insignia by contacting us and providing the following:

(a) Your name, address, and telephone number;

(b) The name of the manufacturer or person converting the conversion vendor unit or medical unit;

(c) The serial number;

(d) The manufacturer number (V#) if available;

(e) The insignia number if available;

(f) The required fee from WAC 296-150V-3000; and

(2) If we can determine that your unit previously had an insignia, we will:

(a) Perform an inspection to ensure that no unauthorized remodeling has occurred; and

(b) Attach an insignia to your unit once we receive your insignia fee listed in WAC 296-150V-3000.

Note: If unauthorized remodeling has occurred see WAC 296-150V-0200.

[Statutory Authority: Chapter 43.22 RCW. 99-18-069, § 296-150V-0250, filed 8/31/99, effective 10/1/99.]

WAC 296-150V-0300 When is design-plan approval required? Design plans for conversion vendor units and medical units are required for units that are sold, leased, or used in Washington state and must be approved when:

(1) You build a new unit;

(2) You modify an approved design plan through addendums;

(3) You add options to an approved design plan through addendums.

[Statutory Authority: Chapter 43.22 RCW. 99-18-069, § 296-150V-0300, filed 8/31/99, effective 10/1/99.]

WAC 296-150V-0310 Who can approve design plans? Your design plan must be approved by the department.

[Statutory Authority: Chapter 43.22 RCW. 99-18-069, § 296-150V-0310, filed 8/31/99, effective 10/1/99.]

WAC 296-150V-0320 What must I provide with my request for conversion vendor unit or medical unit design-plan approval by the department? (1) All requests for design-plan approval must include:

(a) A completed design-plan approval request form;

(b) Two sets of design plans, specifications and test results and procedures necessary for a complete evaluation of the design;

(c) Receipt of the design-plan fee listed in WAC 296-150V-3000;

(d) Receipt of the initial design-plan filing fee and the initial design-plan fee.

(2) If a structural analysis or test is required for a concentrated floor load, at least one set of design plans must have an original wet stamp from a professional engineer or architect licensed in Washington state. All new, renewed, and resubmitted plans, specifications, reports and structural calculations prepared by or prepared under the engineer or architect's direct supervision shall be signed, dated and stamped with his or her seal. Specifications, reports, and structural calculations may be stamped only on the first sheet, provided this first sheet identifies all of the sheets that follow are included and identified in the same manner. Plans that have not been prepared by or under the engineer's or architect's supervision shall be reviewed and he or she must prepare a report concerning the plans. This report must:

(a) Identify which drawings have been reviewed by drawing number and date;

(b) Include a statement that the plans are in compliance with current Washington state regulations; and

(c) Be stamped and signed by the reviewer.

(3) Any deficiencies shall be corrected on the drawings before submitting to the department or be included in the report and identify as to how they are to be corrected. This report shall be attached to the plan(s) that were reviewed. We will retain the set with the original wet stamp.

(4) All plans required by WAC 296-46-140, plan review for health care facilities, require a separate electrical plan review and electrical plan review fees (see fees in WAC 296-150V-3000).

[Statutory Authority: Chapter 43.22 RCW. 99-18-069, § 296-150V-0320, filed 8/31/99, effective 10/1/99.]

WAC 296-150V-0340 When is an engineering analysis or structural load test for design plans required? An engineering analysis or structural load test may be required when there are concentrated loads of 500 pounds or more in a 16 square feet or less area.

[Statutory Authority: Chapter 43.22 RCW. 99-18-069, § 296-150V-0340, filed 8/31/99, effective 10/1/99.]

WAC 296-150V-0350 What must test procedures and results for design plans include? (1) Test to a design must be witnessed by a professional engineer or architect licensed in Washington or by a department employee.

(2) Test reports must contain the following items:

(a) A description of the methods or standards that applied to the test;

(b) Drawings and a description of the item tested;

(c) A description of the test set-up;

(d) The procedure used to verify the correct load;

(e) The procedure used to measure each condition;

(f) Test data, including applicable graphs and observations of the characteristics and behavior of the item tested; and

(g) Analysis, comments, and conclusion.

[Statutory Authority: Chapter 43.22 RCW. 99-18-069, § 296-150V-0350, filed 8/31/99, effective 10/1/99.]

WAC 296-150V-0380 What happens if you approve my design plan? (1) Your design plan will be approved if it meets the requirements of this chapter.

(2) We will send you an approved copy of the design plan with the design-plan approval number.

(3) You must keep copies of the approved design plan available for inspection at each location where the conversion vendor unit or medical unit is built.

(4) If your design plan is not approved, you will be notified in writing of plan deficiencies. You may send a corrected design plan to us along with the resubmittal fee listed in WAC 296-150V-3000.

[Statutory Authority: Chapter 43.22 RCW. 99-18-069, § 296-150V-0380, filed 8/31/99, effective 10/1/99.]

WAC 296-150V-0390 If my design plan is not approved, how much time do I have to submit a corrected design plan? (1) You have ninety days to correct and resubmit your original design plan and send us the resubmittal fee after we notify you of plan deficiencies. After ninety days, your initial design plan is returned to you.

(2) If you submit your corrected design plan after ninety days, the initial design-plan fee is required instead of the resubmittal fee. (See WAC 296-150V-3000.)

[Statutory Authority: Chapter 43.22 RCW. 99-18-069, § 296-150V-0390, filed 8/31/99, effective 10/1/99.]

WAC 296-150V-0400 What happens after my design plan is approved? Once your design plan is approved, we will inspect each conversion vendor unit and medical unit.

[Statutory Authority: Chapter 43.22 RCW. 99-18-069, § 296-150V-0400, filed 8/31/99, effective 10/1/99.]

WAC 296-150V-0410 When does my design plan expire? (1) Your conversion vendor unit or medical unit one-year design plan expires either one year after approval or when there is an electrical code change. You must submit new design plans for approval when there is a state building code cycle change. You may use your design plans to order insignia as long as they comply with the applicable codes.

(2) All National Electrical Code (NEC) amendments may be incorporated by an addendum to your design plan.

[Statutory Authority: Chapter 43.22 RCW. 99-18-069, § 296-150V-0410, filed 8/31/99, effective 10/1/99.]

WAC 296-150V-0415 Who approves addendums to design plans? Any addendums to a design plan must be approved by the department.

[Statutory Authority: Chapter 43.22 RCW. 99-18-069, § 296-150V-0415, filed 8/31/99, effective 10/1/99.]

WAC 296-150V-0500 When is an inspection required? (1) Before we issue an insignia, each unit manufactured or converted must be inspected as many times as required to show compliance with this chapter.

(2) Before we issue an insignia, a conversion vendor unit or medical unit must be inspected at the manufacturing location as many times as required. Inspections may include, but are not limited to:

(a) A "cover" inspection during construction of the unit before the electrical, plumbing, mechanical, and structural systems (if required) are covered;

(b) Insulation and vapor barrier inspection, if required; and

(c) A final inspection after the conversion vendor unit or medical unit is complete.

(3) If we discover a violation during inspection, we will issue a notice of noncompliance. You can correct the violation during the inspection. If you cannot correct the violation during inspection, you must leave the item uncovered until we approve your correction.

(4) If a conversion vendor unit or medical unit is damaged in transit to the building site or during on-site installation, it must be inspected. This is considered an alteration inspection. (See WAC 296-150V-0240.)

(5) Approved plans must be available.

(6) Once your unit is inspected and approved we will attach the insignia. Before we issue an insignia, each conversion vendor unit or medical unit is inspected as follows:

(a) Inspection(s) during conversion or alteration of a conversion vendor unit or medical unit; and

(b) A final inspection after the conversion vendor unit or medical unit is complete.

Note: Each conversion vendor unit or medical unit must have a serial number so we can track inspections.

[Statutory Authority: Chapter 43.22 RCW. 99-18-069, § 296-150V-0500, filed 8/31/99, effective 10/1/99.]

WAC 296-150V-0510 How do I request an inspection? You must contact us and we will let you know where your request for inspection should be submitted. Our address is noted in the definition of department in WAC 296-150V-0020.

(1) We must receive in-state inspection requests at least seven calendar days prior to the date that you want the inspection.

(2) We must receive out-of-state inspection requests at least fourteen calendar days prior to the date that you want the inspection.

[Statutory Authority: Chapter 43.22 RCW. 99-18-069, § 296-150V-0510, filed 8/31/99, effective 10/1/99.]

WAC 296-150V-0520 What happens if my conversion vendor unit or medical unit passes inspection? If your conversion vendor unit or medical unit passes inspection and

you have met the other requirements of this chapter, we will attach the insignia.

[Statutory Authority: Chapter 43.22 RCW. 99-18-069, § 296-150V-0520, filed 8/31/99, effective 10/1/99.]

WAC 296-150V-0530 Am I charged if I request an inspection but I am not prepared? (1) If you ask us to inspect a conversion vendor unit or medical unit within Washington state but you are not prepared when we arrive, you must pay the inspection fee and travel (see WAC 296-150V-3000).

(2) If the inspection is outside of Washington state and you are not prepared, you must pay the inspection fee, travel, and per diem expenses (see WAC 296-150V-3000).

[Statutory Authority: RCW 43.22.340, 43.22.350, 43.22.355, 43.22.360, 43.22.400, 43.22.432, 43.22.433, 43.22.434, 43.22.450, 43.22.480, and 43.22.485. 00-17-148, § 296-150V-0530, filed 8/22/00, effective 9/30/00. Statutory Authority: Chapter 43.22 RCW. 99-18-069, § 296-150V-0530, filed 8/31/99, effective 10/1/99.]

WAC 296-150V-0540 Who inspects a conversion vendor unit or medical unit installation at the building site or event location? The local enforcement agency (city or county) must approve the installation. Alterations to conversion vendor units or medical units must be inspected and approved by us.

Note: The local enforcement agency may not open the concealed construction of a conversion vendor unit or medical unit to inspect it if our insignia is attached.

[Statutory Authority: Chapter 43.22 RCW. 99-18-069, § 296-150V-0540, filed 8/31/99, effective 10/1/99.]

WAC 296-150V-0550 Do you allow a conversion vendor unit or medical unit to be completed at the installation site? No. Conversion vendor units or medical units must be completed at the manufacturing location before an insignia is attached.

[Statutory Authority: Chapter 43.22 RCW. 99-18-069, § 296-150V-0550, filed 8/31/99, effective 10/1/99.]

WAC 296-150V-0560 What happens if I receive a notice of noncompliance after inspection of the alteration to my conversion vendor unit or medical unit? (1) If your conversion vendor unit or medical unit alteration does not pass our inspection, you will receive a notice of noncompliance. The notice of noncompliance explains what items must be corrected.

(2) You have twenty days after receiving the notice of noncompliance to send us a written response to explain how you will correct the violations.

(3) You are not allowed to sell, lease, offer for sale or use the altered conversion vendor unit or medical unit until you correct the violations. We must inspect and approve the corrections, and you must pay any required inspection and insignia fees listed in WAC 296-150V-3000.

[Statutory Authority: Chapter 43.22 RCW. 99-18-069, § 296-150V-0560, filed 8/31/99, effective 10/1/99.]

WAC 296-150V-0580 Must I obtain an insignia for used conversion vendor units or medical units? All used conversion vendor units or medical units that are to be installed on a building site or used in Washington state must have an insignia of approval from us, with the exception of those in WAC 296-150V-0200(2).

[Statutory Authority: Chapter 43.22 RCW. 99-18-069, § 296-150V-0580, filed 8/31/99, effective 10/1/99.]

WAC 296-150V-0590 How do I obtain insignia for used conversion vendor units or medical units? We consider used conversion vendor units and medical units as new units for purposes of insignia approval. To obtain insignia, you must:

(1) Have the design plan approved (see WAC 296-150V-0300 and 296-150V-0320);

(2) Purchase insignia (see WAC 296-150V-0200 through 296-150V-0230); and

(3) Pass a unit inspection (see WAC 296-150V-0500 through 296-150V-0560).

Note: You will be required to open up as much of the construction of the unit as is necessary for inspection to show compliance with your approved design plan.

[Statutory Authority: Chapter 43.22 RCW. 99-18-069, § 296-150V-0590, filed 8/31/99, effective 10/1/99.]

WAC 296-150V-0700 Must manufacturers of conversion vendor units and medical units notify you if they manufacture at more than one location? (1) If you are manufacturing conversion vendor units and medical units at more than one location, approved design plans must be available at each manufacturing location.

(2) You must send us the following information for each manufacturing location:

(a) Company name;

(b) Mailing and physical address; and

(c) Phone and fax number, if available.

(3) You must update this information as it changes.

[Statutory Authority: Chapter 43.22 RCW. 99-18-069, § 296-150V-0700, filed 8/31/99, effective 10/1/99.]

WAC 296-150V-0710 Must manufacturers of conversion vendor units and medical units notify you of a change in business name or address? If you are moving you must notify us in writing prior to a change of business name or address and include the change of name and address.

[Statutory Authority: Chapter 43.22 RCW. 99-18-069, § 296-150V-0710, filed 8/31/99, effective 10/1/99.]

WAC 296-150V-0720 Must manufacturers of conversion vendor units and medical units notify you of a change in business ownership? (1) When a manufacturer changes ownership, the new owner must notify us in writing immediately.

(2) A new owner may continue to manufacture the units according to a prior approved design plan if the prior owner provides written releases of the design plan.

[Statutory Authority: Chapter 43.22 RCW. 99-18-069, § 296-150V-0720, filed 8/31/99, effective 10/1/99.]

WAC 296-150V-0800 What codes apply to conversion vendor units or medical units? (1) A conversion vendor unit or medical unit must comply with the following codes where applicable:

(a) The Uniform Mechanical Code, with the amendments made by the Washington State Building Code Council, chapter 51-42 WAC.

(b)(i) For conversion vending units Article 551, Parts I through VI of National Electrical Code/National Fire Protection Agency (NFPA) 70, 2002 edition or Article 552, Parts I through V Article of National Electrical Code/National Fire Protection Agency (NFPA) 70, 2002 edition.

(ii) For medical units the National Electrical Code as referenced in chapter 19.28 RCW and chapter 296-46A WAC, installing electric wires and equipment.

(c) Chapter 7 of American National Standards Institute (ANSI) A119.2, 2002 edition or the Uniform Plumbing Code as adopted and amended according to chapter 19.27 RCW.

(d) The Washington State Building Code Council, chapter 51-40 WAC, Uniform Building Code, Chapter 11, Accessibility as applies to the exterior of the unit relating to customer service facilities in section 1105.4.7.

(e) The Washington State Energy Code, as adopted according to chapter 19.27A RCW, and the Washington State Ventilation and Indoor Air Quality Code, chapter 51-13 WAC, when heating and/or air conditioning is installed.

(2) Provide minimum health and safety to the occupants of conversion vendor units and medical units and the public, and demonstrate journeyman quality of work of the various trades.

(3) Requirements for any size, weight, or quality of material modified by the terms "minimum," "not less than," "at least," and similar expressions are minimum standards. The conversion vendor unit or medical unit may exceed these rules provided the deviation does not result in inferior installation or defeat the purpose and intent of this chapter.

Exception: Sign circuits required by Article 600 of the National Electrical Code will not be required.

[Statutory Authority: RCW 43.22.340, 43.22.400, 43.22.432, 43.22.433, 43.22.434, 43.22.480, and 43.22.485, 2002 c 268, and chapter 43.22 RCW. 03-12-044, § 296-150V-0800, filed 5/30/03, effective 6/30/03. Statutory Authority: RCW 43.22.350, 43.22.434, 43.22.480, 43.22.500, 18.27.040, 18.27.070, 18.27.075, 70.87.030, 19.28.041, 19.28.051, 19.28.101, 19.28.121, 19.28.161, 19.28.201, 19.28.211, 19.28.341, 2001 c 7, 2002 c 249, and chapters 19.28, 43.22, 18.27, and 70.87 RCW. 02-12-022, § 296-150V-0800, filed 5/28/02, effective 6/28/02. Statutory Authority: Chapter 43.22 RCW. 99-18-069, § 296-150V-0800, filed 8/31/99, effective 10/1/99.]

WAC 296-150V-0930 When are structural load tests or structural calculations required? (1) A structural analysis is required when a unit has a concentrated floor load of 500 pounds or more in a 16 square feet or less area.

(2) The structural load test can be used as an alternative.

(a) A structural assembly tested for qualification must sustain the design dead load plus the superimposed design live loads for vendor units and medical units assembly.

(b) An assembly failure is defined as a rupture, fracture, or residual deflection which is greater than the limits.

Note: We will provide test procedure forms upon request.

[Statutory Authority: Chapter 43.22 RCW. 99-18-069, § 296-150V-0930, filed 8/31/99, effective 10/1/99.]

WAC 296-150V-0950 What requirements apply to roof coverings? (1) The roof covering must be securely fastened in an approved manner to the supporting roof construction and must provide weather protection for the vendor unit and the occupants.

(2) Exterior covering materials, including metal coverings, must be moisture and weather resistant and contain corrosion resistant fasteners to prevent wind and rain deterioration.

Note: Electro-plated, electro-deposited zinc, and electro-galvanized staples are not considered corrosion-resistant materials.

(3) All exterior openings or penetrations into the conversion vendor unit or medical unit around piping, ducts, plenums, or vents must be sealed with moisture-resistant material.

[Statutory Authority: Chapter 43.22 RCW. 99-18-069, § 296-150V-0950, filed 8/31/99, effective 10/1/99.]

WAC 296-150V-1040 Are there floor requirements? Wood floors must be made moisture resistant by an overlay of nonabsorbent material applied with water-resistant adhesive.

[Statutory Authority: Chapter 43.22 RCW. 99-18-069, § 296-150V-1040, filed 8/31/99, effective 10/1/99.]

WAC 296-150V-1070 What requirements apply to floor closure material? (1) Floor closure material around piping, ducts, plenums, or vents must prevent damage to the underside of the vendor unit due to air, water, insects, dust, and be rodent resistant.

(2) The floor closure material must meet ASTM D-781 standard or equal and be installed as follows:

(a) Fibrous material (with or without patches) must meet or exceed the level of 48 inch-pounds of puncture resistance as tested.

(b) Patching material must be installed according to installation instructions furnished by the supplier of the material.

(c) The material must be suitable for patches and the patch life must be equivalent to the material life.

Note: ASTM D-781 is a puncture test for bottom board materials.

[Statutory Authority: Chapter 43.22 RCW. 99-18-069, § 296-150V-1070, filed 8/31/99, effective 10/1/99.]

WAC 296-150V-1090 What are the standards for equipment and installations? The manufacturer's equipment and installation specifications must be followed. Other approved standards are acceptable when:

- Installed according to the manufacturer's installation instructions; and
- Approved by a listing or testing agency.

Note: Gas furnaces, gas water heaters, and gas refrigerators must be sealed combustion or completely separated from the interior of the conversion vendor unit or medical unit.

[Statutory Authority: RCW 43.22.340, 43.22.400, 43.22.432, 43.22.433, 43.22.434, 43.22.480, and 43.22.485, 2002 c 268, and chapter 43.22 RCW. 03-12-044, § 296-150V-1090, filed 5/30/03, effective 6/30/03. Statutory Authority: Chapter 43.22 RCW. 99-18-069, § 296-150V-1090, filed 8/31/99, effective 10/1/99.]

WAC 296-150V-1100 What are the flame-spread limitations? The flame-spread requirements are that all walls and ceilings must be of 200 flame-spread or less.

[Statutory Authority: Chapter 43.22 RCW. 99-18-069, § 296-150V-1100, filed 8/31/99, effective 10/1/99.]

WAC 296-150V-1110 Combustible limitations. (1) The exposed wall adjacent to the cooking range must be 50 flame-spread or less, such as 5/16 inch gypsum board or material having equivalent fire protective properties.

(2) All openings for pipes and vents in furnace and water heater spaces shall be tight-fitted or fire-stopped.

[Statutory Authority: Chapter 43.22 RCW. 99-18-069, § 296-150V-1110, filed 8/31/99, effective 10/1/99.]

WAC 296-150V-1120 What are the standards for wall and cabinet protection? The bottom and sides of combustible cabinets over cooking appliances or tops including a space of 6 inches from the edge of the burners must be protected with at least 5/16 inch sheetrock with a 25 flame-spread. This material must be behind deep-fat fryers, grills, ranges, and other cooking appliances. It must extend 6 inches beyond the edge of the appliance and range hood.

(1) Range hoods for commercial equipment must meet the requirements of the mechanical code such as fire suppression, etc.

(2) Range hoods for noncommercial equipment may be of a residential type.

(3) The hood must be centered over and at least as wide as the top of the cooking appliance.

[Statutory Authority: Chapter 43.22 RCW. 99-18-069, § 296-150V-1120, filed 8/31/99, effective 10/1/99.]

WAC 296-150V-1170 What are the light and ventilation requirements? Each bathroom must be provided with artificial light and with a window having at least 1/2 square feet of glazed area that can be fully opened, except where a mechanical ventilation system is installed. Any mechanical ventilation system must exhaust directly to the outside of the conversion vendor unit or medical unit.

[Statutory Authority: Chapter 43.22 RCW. 99-18-069, § 296-150V-1170, filed 8/31/99, effective 10/1/99.]

WAC 296-150V-1180 What requirements apply to conversion vendor unit exits on all units approved after December 31, 1999? At least one conversion vending unit exit or medical unit exit must meet the following requirements:

(1) Exterior doors must be constructed for exterior use.

(2) The exterior door must be at least a 28 inch wide clear opening by 72 inches high.

(3) Locks must be operable from the interior of the unit without use of a key.

(4) Exit doors may either be hinged or sliding. Roll-up doors may not be used to meet the requirements of this section.

(5) Existing units with doors less than 28 inches in width must have a second means of exit. The second means of exit for converted units shall be 24 inches by 17 inches, and for newly built units exits must be a minimum of 5 square feet of openable area.

(6) Pass-through windows shall be safety glazed based on the IBC Section 2406.1.

Exception: When there are employees, a minimum of 28 inches clear opening must be provided.

[Statutory Authority: Chapter 43.22 RCW and 2003 c 291. 05-01-102, § 296-150V-1180, filed 12/14/04, effective 2/1/05. Statutory Authority: RCW 43.22.340, 43.22.350, 43.22.355, 43.22.360, 43.22.400, 43.22.432, 43.22.433, 43.22.434, 43.22.450, 43.22.480, and 43.22.485. 00-17-148, § 296-150V-1180, filed 8/22/00, effective 9/30/00. Statutory Authority: Chapter 43.22 RCW. 99-18-069, § 296-150V-1180, filed 8/31/99, effective 10/1/99.]

WAC 296-150V-1185 What exit door requirements apply to self-propelled medical unit exits? Exit door(s) on self-propelled medical units must meet the following requirements:

(1) Exterior doors must be constructed for exterior use.

(2) The exterior door must be at least a 28 inches wide clear opening by 72 inches high.

(3) Locks must be operable from the interior of the unit without use of a key.

(4) Exit doors may either be hinged or sliding. Roll-up doors may not be used to meet the requirements of this section.

(5) Units over 24 feet in length must have a minimum of 2 exit doors.

[Statutory Authority: Chapter 43.22 RCW. 99-18-069, § 296-150V-1185, filed 8/31/99, effective 10/1/99.]

WAC 296-150V-1190 Interior privacy locks. If a conversion vendor unit or medical unit has an interior door, such as a bathroom door, which has a privacy lock, the lock must contain an emergency release. The emergency release must be on the outside to permit entry when the door is locked from the inside.

[Statutory Authority: Chapter 43.22 RCW. 99-18-069, § 296-150V-1190, filed 8/31/99, effective 10/1/99.]

WAC 296-150V-1303 How must storage batteries be installed in a conversion vendor unit or medical unit? Storage batteries subject to the provisions of this standard must be securely attached to the conversion vendor unit or medical unit. They must be installed in an area which is vapor-tight to the interior and ventilated directly to the exterior of the unit. When batteries are installed in a compartment, the compartment must be ventilated with openings of not less than 2 square inches at the top and 2 square inches at the bottom. Batteries must not be installed in a compartment containing spark or flame producing equipment, except in an engine generator compartment if the only charging source is the generator itself.

[Statutory Authority: Chapter 43.22 RCW. 99-18-069, § 296-150V-1303, filed 8/31/99, effective 10/1/99.]

WAC 296-150V-1330 What are the mechanical requirements for a conversion vendor unit or medical unit? When mechanical and ventilation equipment is installed in or on a conversion vendor unit or medical unit, it must be installed according to the requirements of the Uniform Mechanical Code, and to the conditions of the equipment approval or listing.

[Statutory Authority: Chapter 43.22 RCW. 99-18-069, § 296-150V-1330, filed 8/31/99, effective 10/1/99.]

WAC 296-150V-1350 What are the LPG system enclosure and mounting requirements for a conversion vendor unit or medical unit? (1) LPG containers must not be installed, nor stored temporarily, inside any unit. Exception: This prohibition does not apply to completely self-contained hand torches, lanterns, or similar equipment with containers having a maximum water capacity of two and one-half pounds (approximately one pound LPG capacity).

(2) Containers, control valves and regulating equipment, when installed, must meet one of the following requirements:

(a) Be mounted on the "A" frame and not lower than the bottom of the trailer frame; or

(b) Installed in a compartment that is vapor-tight to the inside of the conversion vendor unit or medical unit and accessible only from the outside; or

(c) Be mounted on the chassis or to the floor and neither the container nor its supports may be lower than the top of the axle height.

(3) The compartment must be ventilated at top and bottom to diffuse vapors. The compartment must be ventilated with two vents having an aggregate area of not less than two percent of the floor area of the compartment and must open without restriction to the outside. The required vents must be equally distributed between the floor and ceiling of the compartment. If the lower vent is located in the access door or wall, the bottom edge of the vent must be flush with the floor level of the compartment. The top vent must be located in the access door or wall with the bottom of the vent not more than 12 inches below the ceiling level of the compartment. All vents must have an unrestricted discharge to the outside atmosphere. Access doors or panels of compartments must not be equipped with locks or require special tools or knowledge to open.

(4) Doors, hoods, domes, or portions of housings and enclosures required to be removed or opened for container replacement must incorporate means for clamping them firmly in place and preventing them from working loose during transit. Provisions must be incorporated in the assembly to hold the containers firmly in position and prevent their movement during transit.

(5) LPG containers must be mounted on a substantial support or a base secured firmly to the conversion vendor unit or medical unit chassis. Neither the container nor its support can extend below the conversion vendor unit or medical unit frame.

[Statutory Authority: Chapter 43.22 RCW. 99-18-069, § 296-150V-1350, filed 8/31/99, effective 10/1/99.]

WAC 296-150V-1360 What are the fuel gas piping design requirements for a conversion vendor unit or medical unit? Conversion vendor units or medical units requiring fuel gas for any purpose must be equipped with a gas piping system that is designed for LPG only or combination LPG and natural gas.

[Statutory Authority: Chapter 43.22 RCW. 99-18-069, § 296-150V-1360, filed 8/31/99, effective 10/1/99.]

WAC 296-150V-1380 Can gas tubing be concealed in a conversion vendor unit or medical unit? (1) Tubing must not be run inside walls, floors, partitions, or roofs.

(2) If tubing passes through walls, floors, partitions, roofs, or similar installations, the tubing must be protected by the use of weather resistant grommets that snugly fit both the tubing and the hole through which the tubing passes.

[Statutory Authority: Chapter 43.22 RCW. 99-18-069, § 296-150V-1380, filed 8/31/99, effective 10/1/99.]

WAC 296-150V-1390 What are the pipe-joint compound requirements for gas piping in a conversion vendor unit or medical unit? (1) Screw joints must be made tight with pipe-joint compound that is insoluble in liquefied petroleum gas.

(2) Pipe-joint compound must be approved for the type of gas used. The pipe-joint compound must be applied to the male threads only.

[Statutory Authority: Chapter 43.22 RCW. 99-18-069, § 296-150V-1390, filed 8/31/99, effective 10/1/99.]

WAC 296-150V-1400 What are the gas piping hanger and support requirements for a conversion vendor unit or medical unit? (1) All gas piping must be adequately supported by galvanized or equivalently protected metal straps or hangers at intervals of not more than 4 feet, except where adequate support and protection is provided by structural members.

(2) Gas pipe supply connections must be rigidly anchored to a structural member within 6 inches of the supply connections.

[Statutory Authority: Chapter 43.22 RCW. 99-18-069, § 296-150V-1400, filed 8/31/99, effective 10/1/99.]

WAC 296-150V-1410 What are the electrical bonding requirements for gas piping in a conversion vendor unit or medical unit? (1) Gas piping must not be used for an electrical ground.

(2) The gas line must be bonded.

[Statutory Authority: Chapter 43.22 RCW. 99-18-069, § 296-150V-1410, filed 8/31/99, effective 10/1/99.]

WAC 296-150V-1420 How are gas supply connections in a conversion vendor unit or medical unit identified? A label must be permanently attached on the outside of the exterior wall of the conversion vendor unit or medical unit adjacent to the gas supply connection which provides the following information:

(1) The type of system (i.e., liquid petroleum system or natural gas system or combination liquid petroleum and natural gas system);

(2) The appropriate Btuh input rating; and

(3) If excess ("or more") Btuh input is allowed.

(4) An example of a label would be: Natural Gas System, 250,000 Btuh or more.

[Statutory Authority: Chapter 43.22 RCW. 99-18-069, § 296-150V-1420, filed 8/31/99, effective 10/1/99.]

WAC 296-150V-1430 What requirements apply to gas piping system openings? All openings in the gas piping system must be closed gas-tight with threaded pipe plugs or pipe caps.

[Statutory Authority: Chapter 43.22 RCW. 99-18-069, § 296-150V-1430, filed 8/31/99, effective 10/1/99.]

WAC 296-150V-1440 Are gas piping shut-off valves required in a conversion vendor unit or medical unit? (1) In addition to any valve on the appliance, a shut-off valve must be installed in the fuel piping outside of each gas appliance but inside the conversion vendor unit or medical unit structure and upstream of the union or connector. The shut-off valve must be located within six feet of a cooking appliance and within three feet of any other appliance. A shut-off valve may serve more than one appliance if located as required above.

(2) Shut-off valves used in connection with gas piping must be of a type designed for use with liquefied petroleum gas. Shut-off valves must be tested and approved to ANSI Z21.15 standard or equal.

[Statutory Authority: Chapter 43.22 RCW. 99-18-069, § 296-150V-1440, filed 8/31/99, effective 10/1/99.]

WAC 296-150V-1450 What requirements apply to testing for gas piping leaks before conversion vendor unit or medical unit appliances are connected? (1) The piping system must stand a pressure of at least 10 psi gauge for a period of not less than 15 minutes without showing any drop in pressure.

(2) Pressure must be measured with a gauge calibrated to be read in increments of not greater than 1/10 pound.

(3) The source of pressure must be isolated before the pressure tests are made. Before a test is begun, the temperature of the ambient air and of the piping must be approximately the same, and constant air temperature must be maintained throughout the test.

[Statutory Authority: Chapter 43.22 RCW. 99-18-069, § 296-150V-1450, filed 8/31/99, effective 10/1/99.]

WAC 296-150V-1460 What requirements apply to testing for gas piping leaks after conversion vendor unit or medical unit appliances are connected? (1) After gas appliances have been connected, the gas-piping system must be subjected to a pressure test with the burner valves closed. The test consists of air at not less than 10 inches nor more than 14 inches pressure of water column (6 to 8 ounces). The system must hold this pressure for a period of not less than 10 minutes with no leakage. Before beginning the test, the temperature of the gas-piping system and the test air must be equalized, and this shall be maintained throughout the test.

(2) Appliance shut-off valves ahead of gas cooking appliances may be closed for the performance of this test. When the test is satisfactorily performed, these valves must be opened and, while the system is under pressure, the appliance connectors must be tested with an approved leak detector or approved bubble solution.

[Statutory Authority: Chapter 43.22 RCW. 99-18-069, § 296-150V-1460, filed 8/31/99, effective 10/1/99.]

WAC 296-150V-1470 What are the requirements for appliance installations? (1) The installation of each appliance must conform to the manufacturer's installation instructions. The manufacturer's instructions must be attached to the appliance.

(2) Combustion air inlets and flue gas outlets must be listed as components of the appliance and must be completely separated. The required separation may be obtained by:

(a) The installation of direct vent system (sealed combustion system) appliances; or

(b) The installation of appliances within enclosures so that the appliance combustion system and venting system are separate from the interior atmosphere of the conversion vendor unit or medical unit. There must not be any door, removable access panel, or other opening into the enclosure from the inside of the conversion vendor unit or medical unit. Any openings for ducts, piping, wiring, etc., must be sealed.

(3) Ranges, cooktops, and ovens must not burn outside combustion air.

[Statutory Authority: Chapter 43.22 RCW. 99-18-069, § 296-150V-1470, filed 8/31/99, effective 10/1/99.]

WAC 296-150V-1530 What general plumbing requirements apply? This chapter also applies to the installation of plumbing equipment in any conversion vendor unit or medical unit bearing or required to bear a department insignia. Plumbing fixtures, equipment, and installations in conversion vendor units and medical units must conform to the provisions of Chapter 7 of ANSI 119.2, 2002 edition or the Uniform Plumbing Code and the amendments adopted by the State Building Code Council, except part 1, unless specifically exempted or required by this section. The following also apply:

(1) We will allow a 1-1/4 inch drain for handwashing sinks with an antisiphon vent.

(2) An antisiphon vent will be allowed on one and two compartment sinks in units as long as there is one vent to the exterior so the system will function. Sinks with three or more compartments must be installed as required by the Uniform Plumbing Code.

[Statutory Authority: RCW 43.22.340, 43.22.400, 43.22.432, 43.22.433, 43.22.434, 43.22.480, and 43.22.485, 2002 c 268, and chapter 43.22 RCW. 03-12-044, § 296-150V-1530, filed 5/30/03, effective 6/30/03. Statutory Authority: Chapter 43.22 RCW. 99-18-069, § 296-150V-1530, filed 8/31/99, effective 10/1/99.]

WAC 296-150V-1540 What are the plumbing definitions? Definitions contained in the Uniform Plumbing Code apply to this chapter:

"Drain outlet" is the discharge end of the conversion vendor unit or medical unit main drain to which a drain connector may be attached.

"Main drain" is the principal artery of the conversion vendor unit or medical unit drainage system to which drainage branches may be connected.

"Water-supply connection" is the fitting or point of connection of the conversion vendor unit or medical unit water distribution system to a water connector.

[Statutory Authority: Chapter 43.22 RCW. 99-18-069, § 296-150V-1540, filed 8/31/99, effective 10/1/99.]

WAC 296-150V-1550 What requirements apply to drain outlets? Drain outlets must be equipped with a watertight cap or plug that must be permanently attached to the unit.

[Statutory Authority: Chapter 43.22 RCW. 99-18-069, § 296-150V-1550, filed 8/31/99, effective 10/1/99.]

WAC 296-150V-1560 What is the minimum clearance for drain outlets? The drain outlet and couplers must have a minimum clearance of 3 inches in any direction from all parts of the structure or appurtenances and with at least 18 inches unrestricted clearance directly in front of the drain outlet.

[Statutory Authority: Chapter 43.22 RCW. 99-18-069, § 296-150V-1560, filed 8/31/99, effective 10/1/99.]

WAC 296-150V-1570 What requirements apply to water-supply connections? Water-supply connections must be equipped with a watertight cap or plug that must be permanently attached to the vehicle.

Note: The department of health may have more restrictive requirements. Before modifying your unit to comply with these requirements, be sure to contact that agency.

[Statutory Authority: Chapter 43.22 RCW. 99-18-069, § 296-150V-1570, filed 8/31/99, effective 10/1/99.]

WAC 296-150V-1580 What requirements apply to water heater relief valves and safety devices? (1) All water heaters must be installed with approved fully automatic valve or valves designed to provide temperature and pressure relief. Temperature and pressure relief valves must be tested and approved to ANSI Z21.22 standard or equal.

(2) Any temperature relief valve or combined pressure and temperature relief valve installed for this purpose must have the temperature sensing element immersed in the hottest water within the upper 6 inches of the tank. It must be set to start relieving at a pressure of 150 psi or the rated working pressure of the tank, whichever is lower, and at or below a water temperature of 210 degrees Fahrenheit.

(3) Relief valves must be provided with full-sized drains. Drains must be directed to the exterior of the unit, exiting at least 6 inches above the ground, and must exhaust downward. Drain lines must be of a material approved for hot water distribution and must drain fully by gravity, must not be trapped, and must not have their outlets threaded.

[Statutory Authority: Chapter 43.22 RCW. 99-18-069, § 296-150V-1580, filed 8/31/99, effective 10/1/99.]

WAC 296-150V-1590 What requirements apply to waste holding tanks for conversion vendor units? Conversion vendor units may use either portable waste holding tanks approved by the department of health or permanently mounted waste holding tanks.

(1) All portable waste holding tanks must be listed for the intended use and used per their listing.

(2) All permanently mounted waste holding tanks must meet the following specifications:

(a) Tanks must be listed for the intended use, installed per their listing, and be securely installed to prevent displacement during transportation;

(b) Tanks must be easily removable for service, repair or replacement without having to remove any permanent construction;

(c) Neither the inlet nor vent fitting may extend downward into the tank more than 1-1/2 inches;

(d) The drain opening must be located at the lowest point of the tank;

(e) Tanks must be vented at the highest point in the top of the tank by one of the following methods:

(i) A 1-1/4 inch diameter vent pipe;

(ii) A continuous vent serving as a drain from one additional fixture provided the drain portion is increased one pipe size larger than the connected trap arm;

(iii) Two or more vented drains when at least one is wet-vented and each drain is separately connected to the top of the tank;

(f) A fullway termination valve must be installed in the tank; and

(g) No drain connection may be made between liquid and body waste holding tanks upstream of fullway termination valves.

[Statutory Authority: Chapter 43.22 RCW. 99-18-069, § 296-150V-1590, filed 8/31/99, effective 10/1/99.]

WAC 296-150V-1600 What are the requirements associated with medical and conversion vending units that have been manufactured and used outside the state according to RCW 43.22.380? (1) If the unit does not have any alterations made to body and frame design, construction, plumbing, heating or electrical installations since it was constructed, it will need an insignia issued by the department. In order to receive the insignia, the unit must have been:

(a) Manufactured outside the state of Washington. Proof of this must be demonstrated by a certificate of origin, bill of sale, proof of purchase of materials, manufacture identification tag or serial number, or any other means acceptable to the department that shows that the unit was manufactured outside the state.

(b) Used outside the state for at least six months or more. Proof of this must be demonstrated by showing the purchase of a license plate, a permit(s) issued by another state agency for use in another state, insurance certificate, bill of sale, or any other means acceptable to the department that shows that the unit was used outside the state for at least six months.

(2) If the unit has had alterations made to the body and frame design, construction, plumbing, heating or electrical installations since it was constructed, it will need an insignia issued by the department. In order to receive the insignia, the alterations to the unit must be inspected and approved by the department and the unit must have been:

(a) Manufactured outside the state of Washington. Proof of this must be demonstrated by a certificate of origin, bill of sale, proof of purchase of materials, manufacture identification tag or serial number, or any other means acceptable to the department that shows that the unit was manufactured outside the state.

(b) Used outside the state for at least six months or more. Proof of this must be demonstrated by showing the purchase of a license plate, a permit(s) issued by another state agency for use in another state, insurance certificate, bill of sale, or any other means acceptable to the department that shows that the unit was used outside the state for at least six months.

[Statutory Authority: RCW 43.22.340, 43.22.400, 43.22.432, 43.22.433, 43.22.434, 43.22.480, and 43.22.485, 2002 c 268, and chapter 43.22 RCW. 03-12-044, § 296-150V-1600, filed 5/30/03, effective 6/30/03.]

WAC 296-150V-3000 Conversion vendor units and medical units—Fees.

INITIAL FILING FEE	$31.40
DESIGN PLAN FEES:	
INITIAL FEE - MASTER DESIGN	$216.30
INITIAL FEE - ONE YEAR DESIGN	$88.60
RENEWAL FEE	$37.80
RESUBMIT FEE	$63.20
ADDENDUM (Approval expires on same date as original plan)	$63.20
ELECTRONIC PLAN SUBMITTAL FEE $4.70 per page for the first set of plans and $0.30 per page for each additional set of plans. These fees are in addition to any applicable design plan fees required under this section.	
RECIPROCAL PLAN REVIEW:	
INITIAL FEE - MASTER DESIGN	$96.40
INITIAL FEE - ONE YEAR DESIGN	$58.40
RENEWAL FEE	$58.40
ADDENDUM	$58.40
APPROVAL OF EACH SET OF DESIGN PLANS BEYOND FIRST TWO SETS	$11.90
DEPARTMENT INSPECTION FEES:	
INSPECTION/REINSPECTION (Per hour* plus travel time* and mileage**)	$63.20
TRAVEL (Per hour)*	$63.20
PER DIEM**	
HOTEL***	
MILEAGE**	
RENTAL CAR***	
PARKING***	
AIRFARE***	
ALTERATION INSPECTION (One hour plus insignia alteration fee)	$94.60
DEPARTMENT AUDIT FEES:	
AUDIT (Per hour*)	$63.20
TRAVEL (Per hour*)	$63.20
PER DIEM**	
HOTEL***	
MILEAGE**	
RENTAL CAR***	
PARKING***	
AIRFARE***	
INSIGNIA FEES:	
FIRST SECTION	$18.30
ALTERATION	$31.40
REISSUED-LOST/DAMAGED	$11.90
EXEMPT	$31.40
ELECTRICAL COMMERCIAL/INDUSTRIAL	
Electrical Service/feeders Ampacity	201 plus
Service/feeder	$184.30
Additional Feeder	$35.00
ELECTRICAL MULTIFAMILY RESIDENTIAL	
Electrical Service/feeders	201 plus
Service/feeder	$97.80
Additional Feeder	$25.00
OTHER FEES:	
FIELD TECHNICAL SERVICE (Per hour* plus travel time* and mileage**)	$63.20
PUBLICATION PRINTING AND DISTRIBUTION OF RCW'S AND WAC'S (One free copy per year upon request)	$11.90
* Minimum charge of 1 hour; time spent greater than 1 hour is charged in 1/2 hour increments.	
** Per state guidelines.	
*** Actual charges incurred.	

[Statutory Authority: Chapter 43.22 RCW and 2003 c 291. 05-01-102, § 296-150V-3000, filed 12/14/04, effective 2/1/05. Statutory Authority: Chapters 18.27 and 43.22 RCW. 04-12-048, § 296-150V-3000, filed 5/28/04, effective 6/30/04. Statutory Authority: RCW 43.22.350, 43.22.434, 43.22.480, 43.22.500, 70.87.030, 18.106.070, 18.106.125, 2001 c 7, and chapters 18.106, 43.22, and 70.87 RCW. 03-12-045, § 296-150V-3000, filed 5/30/03, effective 6/30/03. Statutory Authority: RCW 43.22.350, 43.22.434, 43.22.480, 43.22.500, 18.27.040, 18.27.070, 18.27.075, 70.87.030, 19.28.041, 19.28.051, 19.28.101, 19.28.121, 19.28.161, 19.28.201, 19.28.211, 19.28.341, 2001 c 7, 2002 c 249, and chapters 19.28, 43.22, 18.27, and 70.87 RCW. 02-12-022, § 296-150V-3000, filed 5/28/02, effective 6/28/02. Statutory Authority: RCW 43.22.350, 43.22.434, 43.22.480, 43.22.500, 18.27.070, 18.27.075, 70.87.030, 19.28.041, 19.28.051, 19.28.101, 19.28.121, 19.28.161, 19.28.201, 19.28.211, 19.28.341, 2001 c 159, and chapters 43.22, 19.28, 18.27, and 70.87 RCW. 01-12-035, § 296-150V-3000, filed 5/29/01, effective 6/29/01. Statutory Authority: Chapter 43.22 RCW. 99-18-069, § 296-150V-3000, filed 8/31/99, effective 10/1/99.]

Chapter 296-155 WAC

SAFETY STANDARDS FOR CONSTRUCTION WORK

WAC

PART A
GENERAL SAFETY AND HEALTH PROVISIONS

296-155-001 Foreword.
296-155-003 Subsections, subdivisions, items, subitems, and segments.
296-155-005 Purpose and scope.
296-155-006 Equipment approval by nonstate agency or organization.
296-155-007 Incorporation of standards of national organization.
296-155-008 Incorporation of standards of federal agency.
296-155-009 Equipment whether or not owned by, or under control of the employer.
296-155-010 Variance and procedure.
296-155-012 Definitions applicable to all sections of this chapter.
296-155-015 Education and first-aid standards.
296-155-020 Housekeeping.
296-155-030 Acceptable certifications.
296-155-035 General requirements.
296-155-040 Safe place standards.

PART B-1
OCCUPATIONAL HEALTH AND ENVIRONMENTAL CONTROL

296-155-100 Management's responsibility.
296-155-105 Employee's responsibility.
296-155-110 Accident prevention program.
296-155-115 Safety bulletin board.
296-155-120 First-aid training and certification.
296-155-125 First-aid supplies.
296-155-130 First-aid station.
296-155-140 Sanitation.
296-155-145 Occupational noise exposure.
296-155-150 Ionizing radiation.
296-155-155 Nonionizing radiation.
296-155-160 Gases, vapors, fumes, dusts, and mists.
296-155-165 Lighting and illumination.
296-155-170 Ventilation.
296-155-173 Methylenedianiline.
296-155-17301 Scope and application.
296-155-17303 Definitions.
296-155-17305 Permissible exposure limits.
296-155-17307 Communication among employers.
296-155-17309 Emergency situations.
296-155-17311 Exposure monitoring.
296-155-17313 Regulated areas.
296-155-17315 Methods of compliance.
296-155-17317 Respiratory protection.
296-155-17319 Protective work clothing and equipment.
296-155-17321 Hygiene facilities and practices.
296-155-17323 Communication of hazards to employees.
296-155-17325 Housekeeping.
296-155-17327 Medical surveillance.
296-155-17329 Medical removal.
296-155-17331 Recordkeeping.
296-155-17333 Observation of monitoring.
296-155-17337 Appendices.
296-155-17339 Startup dates.
296-155-17341 Appendix A to WAC 296-155-173—Substance data sheet, for 4-4'-methylenedianiline.
296-155-17343 Appendix B to WAC 296-155-173—Substance technical guidelines, MDA.
296-155-17345 Appendix C to WAC 296-155-173—Medical surveillance guidelines for MDA.
296-155-17347 Appendix D to WAC 296-155-173—Sampling and analytical methods for MDA monitoring and measurement procedures.
296-155-174 Cadmium.
296-155-176 Lead.
296-155-17603 Scope.
296-155-17605 Definitions.
296-155-17607 Permissible exposure limit.
296-155-17609 Exposure assessment.
296-155-17611 Methods of compliance.
296-155-17613 Respiratory protection.
296-155-17615 Protective work clothing and equipment.
296-155-17617 Housekeeping.
296-155-17619 Hygiene facilities and practices.
296-155-17621 Medical surveillance.
296-155-17623 Medical removal protection.
296-155-17625 Employee information and training.
296-155-17627 Signs.
296-155-17629 Recordkeeping.
296-155-17631 Observation of monitoring.
296-155-17650 Appendix A to WAC 296-155-176—Substance data sheet for occupational exposure to lead.
296-155-17652 Appendix B to WAC 296-155-176—Employee standard summary.
296-155-17654 Appendix C to WAC 296-155-176—Medical surveillance guidelines.

PART B-2
HAZARD COMMUNICATION

296-155-180 Hazard communication.

PART C
PERSONAL PROTECTIVE AND LIFE SAVING EQUIPMENT

296-155-200 General requirements for personal protective equipment (PPE).
296-155-201 Definitions applicable to this chapter.
296-155-203 Confined spaces.
296-155-20301 Definitions.
296-155-20307 Confined space work on sewer systems under construction.
296-155-205 Head protection.
296-155-210 Hearing protection.
296-155-211 Leg protection.
296-155-212 Foot protection.
296-155-215 Eye and face protection.
296-155-220 Respiratory protection.
296-155-235 Working over or adjacent to water.
296-155-240 Sterilization of protective equipment.

PART C-1
FALL RESTRAINT AND FALL ARREST

296-155-245 Reserve.
296-155-24501 Scope and application.
296-155-24503 Definitions.
296-155-24505 Fall protection work plan.
296-155-24507 Reserve.
296-155-24510 Fall restraint, fall arrest systems.
296-155-24515 Guarding of low pitched roof perimeters.
296-155-24519 Reserve.
296-155-24520 Leading edge control zone.
296-155-24521 Safety monitor system.
296-155-24522 Reserve.
296-155-24523 Appendix A to Part C-1—Determining roof widths nonmandatory guidelines for complying with WAC 296-155-24515 (2)(b).
296-155-24524 Reserve.
296-155-24525 Appendix B to Part C-1—Fall restraint and fall arrest (employer information only).

PART D
FIRE PROTECTION AND PREVENTION

296-155-250 Definitions applicable to this part.
296-155-260 Fire protection.
296-155-265 Fire prevention.
296-155-270 Flammable and combustible liquids.
296-155-275 Liquefied petroleum gas (LP-gas).
296-155-280 Temporary heating devices.

PART E
SIGNALING AND FLAGGERS

296-155-305 Signaling and flaggers.
296-155-310 Barricades.
296-155-315 Definitions applicable to this part.

PART F
MATERIAL HANDLING, STORAGE, USE AND DISPOSAL

296-155-325 General requirements for storage.
296-155-329 Qualified person—Rigging.
296-155-330 Rigging equipment for material handling.
296-155-335 Disposal of waste materials.
296-155-34901 Table F-1.
296-155-34902 Table F-2.
296-155-34903 Table F-3.
296-155-34904 Table F-4.
296-155-34905 Table F-5.
296-155-34906 Table F-6.

296-155-34907 Table F-7.
296-155-34908 Table F-8.
296-155-34909 Table F-9.
296-155-34910 Table F-10.
296-155-34911 Table F-11.
296-155-34912 Table F-12.
296-155-34913 Table F-13.
296-155-34914 Table F-14.
296-155-34915 Table F-15.
296-155-34916 Table F-16.
296-155-34917 Table F-17.
296-155-34918 Table F-18.
296-155-34919 Table F-19.
296-155-34920 Table F-20.

PART G
TOOLS—HAND AND POWER

296-155-350 General requirements.
296-155-355 Hand tools.
296-155-360 Power-operated hand tools.
296-155-363 Safety requirements for powder actuated fastening systems, in accordance with ANSI A10.3-1985, Safety Requirements for Powder Actuated Fastening Systems.
296-155-36301 Scope.
296-155-36303 Purpose.
296-155-36305 Definitions applicable to this section.
296-155-36307 Requirements.
296-155-36309 Power loads.
296-155-36311 Fasteners.
296-155-36313 Operation.
296-155-36315 Limitations of use.
296-155-36317 Maintenance and storage.
296-155-36319 Authorized instructor.
296-155-36321 Qualified operator.
296-155-365 Abrasive wheels and tools.
296-155-367 Masonry saws.
296-155-370 Woodworking tools.
296-155-375 Jacks—Lever and ratchet, screw, and hydraulic.
296-155-380 Air receivers.

PART H
WELDING AND CUTTING

296-155-400 Gas welding and cutting.
296-155-405 Arc welding and cutting.
296-155-407 Protective clothing.
296-155-410 Fire prevention.
296-155-415 Ventilation and protection in welding, cutting, and heating.
296-155-420 Welding, cutting, and heating in way of preservative coatings.

PART I
ELECTRICAL

296-155-426 Introduction.
296-155-428 General requirements.
296-155-429 Lockout and tagging of circuits.
296-155-432 Maintenance of equipment.
296-155-434 Environmental deterioration of equipment.
296-155-437 Batteries and battery charging.
296-155-441 Applicability.
296-155-444 General requirements.
296-155-447 Wiring design and protection.
296-155-449 Wiring methods, components, and equipment for general use.
296-155-452 Specific purpose equipment and installations.
296-155-456 Hazardous (classified) locations.
296-155-459 Special systems.
296-155-462 Definitions applicable to this part.

PART J
STAIRWAYS AND LADDERS

296-155-475 Scope and application.
296-155-47501 Definitions applicable to this part.
296-155-476 General requirements.
296-155-477 Stairways.
296-155-480 Ladders.
296-155-48060 Training requirements.
296-155-48080 Appendix A.
296-155-48090 Reserved.

PART J-1
SCAFFOLDS

296-155-481 Scope and application.
296-155-482 Definitions applicable to this part.
296-155-487 Manually propelled elevating work platforms.
296-155-488 Self propelled elevating work platforms.
296-155-489 Boom supported elevating work platforms.
296-155-490 Aerial lifts.
296-155-496 Non-Mandatory Appendix C to Part J-1, List of National Consensus Standards.

PART K
FLOOR OPENINGS, WALL OPENINGS AND STAIRWAYS

296-155-500 Definitions applicable to this part.
296-155-505 Guardrails, handrails and covers.
296-155-50503 Roofing brackets.
296-155-50505 Reserved.
296-155-510 Reserved.
296-155-515 Ramps, runways, and inclined walkways.

PART L
CRANES, DERRICKS, HOISTS, ELEVATORS, AND CONVEYORS

296-155-525 Cranes and derricks.
296-155-526 Crane attached personnel platforms.
296-155-527 Appendix A to WAC 296-155-525.
296-155-528 Crane or derrick suspended personnel platforms.
296-155-530 Material hoists, personnel hoists, and elevators.
296-155-535 Base-mounted drum hoists.
296-155-540 Overhead hoists.
296-155-545 Conveyors.
296-155-550 Aerial cableways.
296-155-555 Gin poles.
296-155-560 Concrete bucket towers.
296-155-565 Hoisting engines.
296-155-570 Rigging—Wire rope.
296-155-59901 Table 1.
296-155-59902 Table 2.
296-155-59903 Table 3.
296-155-59904 Table 4.
296-155-59905 Table 5.
296-155-59906 Table 6.
296-155-59907 Table 7.
296-155-59908 Table 8.
296-155-59909 Table 9.
296-155-59910 Table 10.
296-155-59911 Table 11.
296-155-59912 Table 12.
296-155-59913 Table 13.
296-155-59914 Table 14.
296-155-59915 Table 15.
296-155-59916 Table 16.
296-155-59917 Table 17.
296-155-59918 Table 18.
296-155-59919 Table 19.
296-155-59920 Table 20.

PART M
MOTOR VEHICLES, MECHANIZED EQUIPMENT, AND MARINE OPERATIONS

296-155-600 Definitions applicable to this part.
296-155-605 Equipment.
296-155-610 Motor vehicles on construction sites.
296-155-615 Material handling equipment.
296-155-620 Pile driving equipment.
296-155-625 Site clearing.
296-155-630 Marine operations and equipment.

PART N
EXCAVATION, TRENCHING, AND SHORING

296-155-650 Scope, application, and definitions applicable to this part.
296-155-655 General protection requirements.
296-155-657 Requirements for protective systems.
296-155-66103 Reserved.
296-155-66105 Reserved.
296-155-66109 Reserved.
296-155-664 Appendices.
296-155-66401 Appendix A—Soil classification.
296-155-66403 Appendix B—Sloping and benching.
296-155-66405 Appendix C—Timber shoring for trenches.

296-155-66407 Appendix D—Aluminum hydraulic shoring for trenches.
296-155-66409 Appendix E—Alternatives to timber shoring.
296-155-66411 Appendix F—Selection of protective systems.

PART O
CONCRETE, CONCRETE FORMS, SHORING, AND MASONRY CONSTRUCTION

296-155-675 Scope, application, and definitions applicable to this part.
296-155-680 General provisions.
296-155-681 Safe walking surfaces on concrete structural members.
296-155-682 Requirements for equipment and tools.
296-155-683 Concrete finishing.
296-155-684 Requirements for cast in place concrete.
296-155-685 Tubular welded frame shoring.
296-155-686 Tube and coupler shoring.
296-155-687 Single post shores.
296-155-688 Vertical slip forms.
296-155-689 Placing and removal of forms.
296-155-690 Appendix to WAC 296-155-684 cast in place concrete.
296-155-691 Precast concrete and tilt-up operations.
296-155-694 Requirements for lift-slab construction operations.
296-155-695 Miscellaneous concrete construction.
296-155-697 Requirements for masonry construction.
296-155-699 Appendix A to Part O—References to Part O of chapter 296-155 WAC.

PART P
STEEL ERECTION

296-155-701 Scope.
296-155-702 Definitions.
296-155-703 Site layout, site-specific erection plan and construction sequence.
296-155-704 Hoisting and rigging.
296-155-706 Structural steel assembly.
296-155-707 Column anchorage.
296-155-708 Beams and columns.
296-155-709 Open web steel joists.
296-155-711 Systems-engineered metal buildings.
296-155-714 Falling object protection.
296-155-716 Fall protection.
296-155-717 Training.

PART Q
UNDERGROUND CONSTRUCTION

296-155-725 Definitions applicable to this part.
296-155-730 Tunnels and shafts.
296-155-735 Caissons.
296-155-740 Cofferdams.
296-155-745 Compressed air.
296-155-74501 Appendix A—Decompression tables.

PART R
MISCELLANEOUS CONSTRUCTION REQUIREMENTS

296-155-755 Roofing, insulating and waterproofing.
296-155-765 Rock crushing, gravel washing, and hot mix plants.
296-155-770 Moving of structures.

PART S
DEMOLITION

296-155-775 Preparatory operations.
296-155-780 Stairs, passageways, and ladders.
296-155-785 Chutes.
296-155-790 Removal of materials through floor openings.
296-155-795 Removal of walls, masonry sections, and chimneys.
296-155-800 Manual removal of floors.
296-155-805 Removal of walls, floors, and material with equipment.
296-155-810 Catch platforms.
296-155-815 Storage.
296-155-820 Removal of steel construction.
296-155-825 Mechanical demolition.
296-155-830 Selective demolition by explosives.

PART U
POWER DISTRIBUTION AND TRANSMISSION LINES
Refer to chapter 296-45 WAC, "Safety standards for electrical workers."

PART V
ROLLOVER PROTECTIVE STRUCTURES AND OVERHEAD PROTECTION

296-155-950 Rollover protective structures (ROPS) for material handling equipment.
296-155-955 Minimum performance criteria for rollover protective structures for designated scrapers, loaders, dozers, graders, and crawler tractors.
296-155-960 Protective frame (ROPS) test procedures and performance requirements for wheel-type agricultural and industrial tractors used in construction.
296-155-965 Overhead protection for operators of agricultural and industrial tractors.

DISPOSITION OF SECTIONS FORMERLY CODIFIED IN THIS CHAPTER

296-155-135 First-aid room. [Order 74-26, § 296-155-135, filed 5/7/74, effective 6/6/74.] Repealed by 00-01-038, filed 12/7/99, effective 2/1/00. Statutory Authority: RCW 49.17.010, [49.17].040 and [49.17].050.

296-155-17335 Effective date. [Statutory Authority: Chapter 49.17 RCW. 93-04-111 (Order 92-15), § 296-155-17335, filed 2/3/93, effective 3/15/93.] Repealed by 99-10-071, filed 5/4/99, effective 9/1/99. Statutory Authority: RCW 49.17.010, [49.17].040 and [49.17].050.

296-155-17349 Appendix E to WAC 296-155-173—Methylenedianiline—Qualitative and quantitative fit testing procedures. [Statutory Authority: Chapter 49.17 RCW. 93-04-111 (Order 92-15), § 296-155-17349, filed 2/3/93, effective 3/15/93.] Repealed by 99-10-071, filed 5/4/99, effective 9/1/99. Statutory Authority: RCW 49.17.010, [49.17].040 and [49.17].050.

296-155-17351 Appendix E-1—Qualitative protocols. [Statutory Authority: Chapter 49.17 RCW. 93-04-111 (Order 92-15), § 296-155-17351, filed 2/3/93, effective 3/15/93.] Repealed by 99-10-071, filed 5/4/99, effective 9/1/99. Statutory Authority: RCW 49.17.010, [49.17].040 and [49.17].050.

296-155-17353 Appendix E-1-a—Isoamyl acetate (banana oil) protocol. [Statutory Authority: Chapter 49.17 RCW. 93-04-111 (Order 92-15), § 296-155-17353, filed 2/3/93, effective 3/15/93.] Repealed by 99-10-071, filed 5/4/99, effective 9/1/99. Statutory Authority: RCW 49.17.010, [49.17].040 and [49.17].050.

296-155-17355 Appendix E-1-b—Saccharin solution aerosol protocol. [Statutory Authority: Chapter 49.17 RCW. 93-04-111 (Order 92-15), § 296-155-17355, filed 2/3/93, effective 3/15/93.] Repealed by 99-10-071, filed 5/4/99, effective 9/1/99. Statutory Authority: RCW 49.17.010, [49.17].040 and [49.17].050.

296-155-17357 Appendix E-1-c—Irritant fume protocol. [Statutory Authority: Chapter 49.17 RCW. 93-04-111 (Order 92-15), § 296-155-17357, filed 2/3/93, effective 3/15/93.] Repealed by 99-10-071, filed 5/4/99, effective 9/1/99. Statutory Authority: RCW 49.17.010, [49.17].040 and [49.17].050.

296-155-17359 Appendix E-2—Quantitative fit test procedures. [Statutory Authority: Chapter 49.17 RCW. 93-04-111 (Order 92-15), § 296-155-17359, filed 2/3/93, effective 3/15/93.] Repealed by 99-10-071, filed 5/4/99, effective 9/1/99. Statutory Authority: RCW 49.17.010, [49.17].040 and [49.17].050.

296-155-175 Scope and application. [Statutory Authority: RCW 49.17.050(2) and 49.17.040. 87-10-008 (Order 87-06), § 296-155-175, filed 4/27/87.] Repealed by 87-24-051 (Order 87-24), filed 11/30/87. Statutory Authority: Chapter 49.17 RCW.

296-155-17505 Definitions. [Statutory Authority: RCW 49.17.050(2) and 49.17.040. 87-10-008 (Order 87-06), § 296-155-17505, filed 4/27/87.] Repealed by 87-24-051 (Order 87-24), filed 11/30/87. Statutory Authority: Chapter 49.17 RCW.

296-155-17510 Permissible exposure limits (pel). [Statutory Authority: RCW 49.17.050(2) and 49.17.040. 87-10-008 (Order 87-06), § 296-155-17510, filed 4/27/87.] Repealed by 87-24-051 (Order 87-24), filed 11/30/87. Statutory Authority: Chapter 49.17 RCW.

296-155-17515 Communication among employers. [Statutory Authority: RCW 49.17.050(2) and 49.17.040. 87-10-008 (Order 87-06), § 296-155-17515, filed 4/27/87.] Repealed by 87-24-051 (Order 87-24), filed 11/30/87. Statutory Authority: Chapter 49.17 RCW.

296-155-17520 Identification. [Statutory Authority: RCW 49.17.050(2) and 49.17.040. 87-10-008 (Order 87-06), § 296-155-17520, filed 4/27/87.] Repealed by 87-24-051 (Order 87-24), filed 11/30/87. Statutory Authority: Chapter 49.17 RCW.

296-155-17525 Regulated areas. [Statutory Authority: RCW 49.17.050(2) and 49.17.040. 87-10-008 (Order 87-06), § 296-155-17525, filed 4/27/87.] Repealed by 87-24-051 (Order 87-24), filed 11/30/87. Statutory Authority: Chapter 49.17 RCW.

296-155-17530 Exposure monitoring. [Statutory Authority: RCW 49.17.050(2) and 49.17.040. 87-10-008 (Order 87-06), § 296-155-17530, filed 4/27/87.] Repealed by 87-24-051 (Order 87-24), filed 11/30/87. Statutory Authority: Chapter 49.17 RCW.

296-155-17532 Methods of compliance. [Statutory Authority: RCW 49.17.050(2) and 49.17.040. 87-10-008 (Order 87-06), § 296-155-17532, filed 4/27/87.] Repealed by 87-24-051 (Order 87-24), filed 11/30/87. Statutory Authority: Chapter 49.17 RCW.

296-155-17535 Respiratory protection. [Statutory Authority: RCW 49.17.050(2) and 49.17.040. 87-10-008 (Order 87-06), § 296-155-17535, filed 4/27/87.] Repealed by 87-24-051 (Order 87-24), filed 11/30/87. Statutory Authority: Chapter 49.17 RCW.

296-155-17540 Protective clothing. [Statutory Authority: RCW 49.17.050(2) and 49.17.040. 87-10-008 (Order 87-06), § 296-155-17540, filed 4/27/87.] Repealed by 87-24-051 (Order 87-24), filed 11/30/87. Statutory Authority: Chapter 49.17 RCW.

296-155-17545 Hygiene facilities and practices. [Statutory Authority: RCW 49.17.050(2) and 49.17.040. 87-10-008 (Order 87-06), § 296-155-17545, filed 4/27/87.] Repealed by 87-24-051 (Order 87-24), filed 11/30/87. Statutory Authority: Chapter 49.17 RCW.

296-155-17550 Communication of hazards to employees. [Statutory Authority: RCW 49.17.050(2) and 49.17.040. 87-10-008 (Order 87-06), § 296-155-17550, filed 4/27/87.] Repealed by 87-24-051 (Order 87-24), filed 11/30/87. Statutory Authority: Chapter 49.17 RCW.

296-155-17555 Housekeeping. [Statutory Authority: RCW 49.17.050(2) and 49.17.040. 87-10-008 (Order 87-06), § 296-155-17555, filed 4/27/87.] Repealed by 87-24-051 (Order 87-24), filed 11/30/87.Statutory Authority: Chapter 49.17 RCW.

296-155-17560 Medical surveillance. [Statutory Authority: RCW 49.17.050(2) and 49.17.040. 87-10-008 (Order 87-06), § 296-155-17560, filed 4/27/87.] Repealed by 87-24-051 (Order 87 -24), filed 11/30/87. Statutory Authority: Chapter 49.17 RCW.

296-155-17565 Recordkeeping. [Statutory Authority: RCW 49.17.050(2) and 49.17.040. 87-10-008 (Order 87-06), § 296-155-17565, filed 4/27/87.] Repealed by 87-24-051 (Order 87-24), filed 11/30/87. Statutory Authority: Chapter 49.17 RCW.

296-155-17570 Dates. [Statutory Authority: RCW 49.17.050(2) and 49.17.040. 87-10-008 (Order 87-06), § 296-155-17570, filed 4/27/87.] Repealed by 87-24-051 (Order 87-24), filed 11/30/87. Statutory Authority: Chapter 49.17 RCW.

296-155-17575 Appendices. [Statutory Authority: RCW 49.17.050(2) and 49.17.040. 87-10-008 (Order 87-06), § 296-155-17575, filed 4/27/87.] Repealed by 87-24-051 (Order 87-24), filed 11/30/87. Statutory Authority: Chapter 49.17 RCW.

296-155-17635 Startup dates. [Statutory Authority: Chapter 49.17 RCW. 93-22-054 (Order 93-07), § 296-155-17635, filed 10/29/93, effective 12/10/93.] Repealed by 99-10-071, filed 5/4/99, effective 9/1/99. Statutory Authority: RCW 49.17.010, [49.17].040 and [49.17].050.

296-155-17656 Appendix D to WAC 296-155-176—Qualitative and quantitative fit test protocols. [Statutory Authority: Chapter 49.17 RCW. 93-22-054 (Order 93-07), § 296-155-17656, filed 10/29/93, effective 12/10/93.] Repealed by 99-10-071, filed 5/4/99, effective 9/1/99. Statutory Authority: RCW 49.17.010, [49.17].040 and [49.17].050.

296-155-177 Appendix A—WISHA reference method —Mandatory. [Statutory Authority: RCW 49.17.050(2) and 49.17.040. 87-10-008 (Order 87-06), § 296-155-177, filed 4/27/87.] Repealed by 87-24 -051 (Order 87-24), filed 11/30/87. Statutory Authority: Chapter 49.17 RCW.

296-155-179 Appendix B—Detailed procedure for asbestos, tremolite, anthophyllite, and actinolite sampling and analysis —Nonmandatory. [Statutory Authority: RCW 49.17.050(2) and 49.17.040. 87-10-008 (Order 87-06), § 296-155-179, filed 4/27/87.] Repealed by 87-24-051 (Order 87-24), filed 11/30/87. Statutory Authority: Chapter 49.17 RCW.

296-155-181 Appendix C—Qualitative and quantitative fit testing procedures—Mandatory. [Statutory Authority: RCW 49.17.050(2) and 49.17.040. 87-10-008 (Order 87-06), § 296-155-181, filed 4/27/87.] Repealed by 87-24-051 (Order 87-24), filed 11/30/87. Statutory Authority: Chapter 49.17 RCW.

296-155-183 Appendix D—Medical questionnaires—Mandatory. [Statutory Authority: RCW 49.17.050(2) and 49.17.040. 87-10-008 (Order 87-06), § 296-155-183, filed 4/27/87.] Repealed by 87-24-051 (Order 87-24), filed 11/30/87. Statutory Authority: Chapter 49.17 RCW.

296-155-185 Appendix E—Interpretation and classification of chest roentgenograms—Mandatory. [Statutory Authority: RCW 49.17.050(2) and 49.17.040. 87-10-008 (Order 87-06), § 296-155-185, filed 4/27/87.] Repealed by 87-24 -051 (Order 87-24), filed 11/30/87. Statutory Authority: Chapter 49.17 RCW.

296-155-187 Appendix F—Work practices and engineering controls for major asbestos removal, renovation, and demolition operations—Nonmandatory. [Statutory Authority: RCW 49.17.050(2) and 49.17.040. 87-10-008 (Order 87-06), § 296-155-187, filed 4/27/87.] Repealed by 87-24-051 (Order 87-24), filed 11/30/87. Statutory Authority: Chapter 49.17 RCW.

296-155-189 Appendix G—Work practices and engineering controls for small-scale, short-duration asbestos renovation and maintenance operations—Nonmandatory. [Statutory Authority: RCW 49.17.050(2) and 49.17.040. 87-10-008 (Order 87-06), § 296-155-189, filed 4/27/87.] Repealed by 87-24-051 (Order 87-24), filed 11/30/87. Statutory Authority: Chapter 49.17 RCW.

296-155-191 Appendix H—Substance technical information for asbestos—Nonmandatory. [Statutory Authority: RCW 49.17.050(2) and 49.17.040. 87-10-008 (Order 87-06), § 296-155-191, filed 4/27/87.] Repealed by 87-24-051 (Order 87-24), filed 11/30/87. Statutory Authority: Chapter 49.17 RCW.

296-155-193 Appendix I—Medical surveillance guidelines for asbestos, tremolite, anthophyllite, and actinolite—Nonmandatory. [Statutory Authority: RCW 49.17.050(2) and 49.17.040. 87-10-008 (Order 87-06), § 296-155-193, filed 4/27/87.] Repealed by 87-24-051 (Order 87-24), filed 11/30/87. Statutory Authority: Chapter 49.17 RCW.

296-155-225 Safety belts, droplines, lifelines, and lanyards. [Statutory Authority: RCW 49.17.040 and 49.17.050. 86-03-074 (Order 86-14), § 296-155-225, filed 1/21/86; Order 76-29, § 296-155-225, filed 9/30/76; Order 74-26, § 296-155-225, filed 5/7/74, effective 6/6/74.] Repealed by 91-03-044 (Order 90-18), filed 1/10/91, effective 2/12/91. Statutory Authority: Chapter 49.17 RCW.

296-155-229 Qualified person—Rigging. [Statutory Authority: RCW 49.17.010, [49.17].040, [49.17].050 and [49.17].-060. 98-13-069, § 296-155-229, filed 6/15/98, effective 8/15/98.] Decodified by 98-16-067, filed 8/4/98, effective 8/4/98. Later promulgation, see WAC 296-155-329.

296-155-230 Safety nets. [Statutory Authority: RCW 49.17.040 and 49.17.050. 86-03-074 (Order 86-14), § 296-155-230, filed 1/21/86; Order 74-26, § 296-155-230, filed 5/7/74, effective 6/6/74.] Repealed by 91-03-044 (Order 90-18), filed 1/10/91, effective 2/12/91. Statutory Authority: Chapter 49.17 RCW.

296-155-300 Accident prevention signs and tags. [Statutory Authority: RCW 49.17.010, 49.17.040, 49.17.050, and 49.17.060. 03-06-075, § 296-155-300, filed 3/4/03, effective 8/1/03. Statutory Authority: Chapter 49.17 RCW. 93-19-142 (Order 93-04), § 296-155-300, filed 9/22/93, effective 11/1/93; 93-01-067 (Order 92-15), § 296-155-300, filed 12/11/92, effective 1/15/93. Statutory Authority: RCW 49.17.040 and 49.17.050. 86-03-074 (Order 86-14), § 296-155-300, filed 1/21/86; Order 74-26, § 296-155-300, filed 5/7/74, effective 6/6/74.] Repealed by 04-18-080, filed 8/31/04, effective 11/1/04. Statutory Authority: RCW 49.17.010, 49.17.040, 49.17.050, 49.17.060. Later promulgation, see WAC 296-800-11045.

296-155-425 Definitions applicable to this part. [Statutory Authority: RCW 49.17.040 and 49.17.050. 86-03-074 (Order 86-14), § 296-155-425, filed 1/21/86; Order 74-26, § 296-155-425, filed 5/7/74, effective 6/6/74.] Repealed by 88-

11-021 (Order 88-04), filed 5/11/88. Statutory Authority: Chapter 49.17 RCW.

296-155-430 General requirements. [Statutory Authority: RCW 49.17.040 and 49.17.050. 86-03-074 (Order 86-14), § 296-155-430, filed 1/21/86; Order 77-20, § 296-155-430, filed 10/18/77; Order 77-12, § 296-155-430, filed 7/11/77; Order 74-26, § 296-155-430, filed 5/7/74, effective 6/6/74.] Repealed by 88-11-021 (Order 88-04), filed 5/11/88. Statutory Authority: Chapter 49.17 RCW.

296-155-435 Grounding and bonding. [Statutory Authority: RCW 49.17.040 and 49.17.050. 86-03-074 (Order 86-14), § 296-155-435, filed 1/21/86; Order 74-26, § 296-155-435, filed 5/7/74, effective 6/6/74.] Repealed by 88-11-021 (Order 88-04), filed 5/11/88. Statutory Authority: Chapter 49.17 RCW.

296-155-440 Equipment installation and maintenance. [Statutory Authority: RCW 49.17.040 and 49.17.050. 86-03-074 (Order 86-14), § 296 -155-440, filed 1/21/86; Order 74-26, § 296-155-440, filed 5/7/74, effective 6/6/74.] Repealed by 88-11-021 (Order 88-04), filed 5/11/88. Statutory Authority: Chapter 49.17 RCW.

296-155-450 Battery rooms and battery charging. [Order 74-26, § 296-155-450, filed 5/7/74, effective 6/6/74.] Repealed by 88-11-021 (Order 88-04), filed 5/11/88. Statutory Authority: Chapter 49.17 RCW.

296-155-455 Hazardous locations. [Order 74-26, § 296-155-455, filed 5/7/74, effective 6/6/74.] Repealed by 88-11-021 (Order 88-04), filed 5/11/88. Statutory Authority: Chapter 49.17 RCW.

296-155-483 General requirements. [Statutory Authority: RCW 49.17.010, [49.17].040, and [49.17].050. 00-14-058, § 296-155-483, filed 7/3/00, effective 10/1/00. Statutory Authority: RCW 49.17.010, [49.17].040, [49.17].050 and [49.17].060. 98-05-046, § 296-155-483, filed 2/13/98, effective 4/15/98. Statutory Authority: Chapter 49.17 RCW. 91-24-017 (Order 91-07), § 296-155-483, filed 11/22/91, effective 12/24/91.] Repealed by 05-01-054, filed 12/7/04, effective 3/1/05. Statutory Authority: RCW 49.17.010, 49.17.040, 49.17.050, 49.17.060.

296-155-484 Additional requirements applicable to specific types of scaffolds. [Statutory Authority: RCW 49.17.010, [49.17].040, [49.17].050 and [49.17].060. 98-05-046, § 296-155-484, filed 2/13/98, effective 4/15/98.] Repealed by 05-01-054, filed 12/7/04, effective 3/1/05. Statutory Authority: RCW 49.17.010, 49.17.040, 49.17.050, 49.17.060.

296-155-485 Reserved. [Statutory Authority: RCW 49.17.010, [49.17].040, [49.17].050 and [49.17].060. 98-05-046, § 296-155-485, filed 2/13/98, effective 4/15/98. Statutory Authority: RCW 49.17.040, [49.17.]050 and [49.17.]060. 96-24-051, § 296-155-485, filed 11/27/96, effective 2/1/97. Statutory Authority: Chapter 49.17 RCW. 95-10-016, § 296-155-485, filed 4/25/95, effective 10/1/95; 94-15-096 (Order 94-07), § 296-155-485, filed 7/20/94, effective 9/20/94; 91-24-017 (Order 91-07), § 296-155-485, filed 11/22/91, effective 12/24/91; 91-03-044 (Order 90-18), § 296-155-485, filed 1/10/91, effective 2/12/91; 90-03-029 (Order 89-20), § 296-155-485, filed 1/11/90, effective 2/26/90. Statutory Authority: RCW 49.17.040 and 49.17.050. 86-03-074 (Order 86-14), § 296-155-485, filed 1/21/86; 82-08-026 (Order 82-10), § 296-155-485, filed 3/30/82. Statutory Authority: RCW 49.17.040, 49.17.150, and 49.17.240. 79-08-115 (Order 79-9), § 296-155-485, filed 7/31/79; Order 76-29, § 296-155-485, filed 9/30/76; Order 76-6, § 296-155-485, filed 3/1/76; Order 74-26, § 296-155-485, filed 5/7/74, effective 6/6/74.] Repealed by 05-01-054, filed 12/7/04, effective 3/1/05. Statutory Authority: RCW 49.17.010, 49.17.040, 49.17.050, 49.17.060.

296-155-48501 Figure J-1. [Order 76-29, Figure J-1 (codified as WAC 296-155-48501), filed 9/30/76; Order 74-26, § 296-155-485 (part), Figure J-1, filed 5/7/74, effective 6/6/74.] Repealed by 82-08-026 (Order 82-10), filed 3/30/82. Statutory Authority: RCW 49.17.040 and 49.17.050.

296-155-48502 Figure J-2. [Order 76-29, Figure J-2 (codified as WAC 296-155-48502), filed 9/30/76; Order 74-26, § 296-155-485 (part), Figure J-2, filed 5/7/74, effective 6/6/74.] Repealed by 82-08-026 (Order 82-10), filed 3/30/82. Statutory Authority: RCW 49.17.040 and 49.17.050.

296-155-48503 Table J-1. [Order 76-29, Table J-1 (codified as WAC 296-155-48503), filed 9/30/76; Order 74-26, § 296-155-485 (part), Table J-1, filed 5/7/74, effective 6/6/74.] Repealed by 98-05-046, filed 2/13/98, effective 4/15/98. Statutory Authority: RCW 49.17.010, [49.17].040, [49.17].050 and [49.17].060.

296-155-48504 Table J-2. [Order 76-29, Table J-2 (codified as WAC 296-155-48504), filed 9/30/76; Order 74-26, § 296-155-485 (part), Table J-2, filed 5/7/74, effective 6/6/74.] Repealed by 98-05-046, filed 2/13/98, effective 4/15/98. Statutory Authority: RCW 49.17.010, [49.17].040, [49.17].050 and [49.17].060.

296-155-48505 Table J-3. [Order 76-29, Table J-3 (codified as WAC 296-155-48505), filed 9/30/76; Order 74-26, § 296-155-485 (part), Table J-3, filed 5/7/74, effective 6/6/74.] Repealed by 98-05-046, filed 2/13/98, effective 4/15/98. Statutory Authority: RCW 49.17.010, [49.17].040, [49.17].050 and [49.17].060.

296-155-48506 Table J-4. [Order 76-29, Table J-4 (codified as WAC 296-155-48506), filed 9/30/76; Order 74-26, § 296-155-485 (part), Table J-4, filed 5/7/74, effective 6/6/74.] Repealed by 98-05-046, filed 2/13/98, effective 4/15/98. Statutory Authority: RCW 49.17.010, [49.17].040, [49.17].050 and [49.17].060.

296-155-48507 Table J-5. [Order 76-29, Table J-5 (codified as WAC 296-155-48507), filed 9/30/76; Order 74-26, § 296-155-485 (part), Table J-5, filed 5/7/74, effective 6/6/74.] Repealed by 98-05-046, filed 2/13/98, effective 4/15/98. Statutory Authority: RCW 49.17.010, [49.17].040, [49.17].050 and [49.17].060.

296-155-48508 Table J-6. [Order 76-29, Table J-6 (codified as WAC 296-155-48508), filed 9/30/76; Order 74-26, § 296-155-485 (part), Table J-6, filed 5/7/74, effective 6/6/74.] Repealed by 98-05-046, filed 2/13/98, effective 4/15/98. Statutory Authority: RCW 49.17.010, [49.17].040, [49.17].050 and [49.17].060.

296-155-48509 Table J-7. [Order 76-29, Table J-7 (codified as WAC 296-155-48509), filed 9/30/76; Order 74-26, § 296-155-485 (part), Table J-7, filed 5/7/74, effective 6/6/74.] Repealed by 98-05-046, filed 2/13/98, effective 4/15/98. Statutory Authority: RCW 49.17.010, [49.17].040, [49.17].050 and [49.17].060.

296-155-48510 Table J-8. [Order 76-29, Table J-8 (codified as WAC 296-155-48510), filed 9/30/76; Order 74-26, § 296-155-485 (part), Table J-8, filed 5/7/74, effective 6/6/74.] Repealed by 98-05-046, filed 2/13/98, effective 4/15/98. Statutory Authority: RCW 49.17.010, [49.17].040, [49.17].050 and [49.17].060.

296-155-48511 Table J-9. [Order 76-29, Table J-9 (codified as WAC 296-155-48511), filed 9/30/76; Order 74-26, § 296-155-485 (part), Table J-9, filed 5/7/74, effective 6/6/74.] Repealed by 98-05-046, filed 2/13/98, effective 4/15/98. Statutory Authority: RCW 49.17.010, [49.17].040, [49.17].050 and [49.17].060.

296-155-48512 Table J-10. [Order 76-29, Table J-10 (codified as WAC 296-155-48512), filed 9/30/76; Order 74-26, § 296-155-485 (part), Table J-10, filed 5/7/74, effective 6/6/74.] Repealed by 98-05-046, filed 2/13/98, effective 4/15/98. Statutory Authority: RCW 49.17.010, [49.17].040, [49.17].050 and [49.17].060.

296-155-48513 Table J-11. [Order 76-29, Table J-11 (codified as WAC 296-155-48513), filed 9/30/76; Order 74-26, § 296-155-485 (part), Table J-11, filed 5/7/74, effective 6/6/74.] Repealed by 98-05-046, filed 2/13/98, effective 4/15/98. Statutory Authority: RCW 49.17.010, [49.17].040, [49.17].050 and [49.17].060.

296-155-48514 Table J-12. [Order 76-29, Table J-12 (codified as WAC 296-155-48514), filed 9/30/76; Order 74-26, § 296-155-485 (part), Table J-12, filed 5/7/74, effective 6/6/74.] Repealed by 98-05-046, filed 2/13/98, effective 4/15/98. Statutory Authority: RCW 49.17.010, [49.17].040, [49.17].050 and [49.17].060.

296-155-48515 Table J-13. [Order 76-29, Table J-13 (codified as WAC 296-155-48515), filed 9/30/76; Order 74-26, § 296-55-485 (part), Table J-13, filed 5/7/74, effective 6/6/74.] Repealed by 98-05-046, filed 2/13/98, effective 4/15/98. Statutory Authority: RCW 49.17.010, [49.17].040, [49.17].050 and [49.17].060.

296-155-48516 Table J-14. [Order 76-29, Table J-14 (codified as WAC 296-155-48516), filed 9/30/76; Order 74-26, § 296-155-485 (part), Table J-14, filed 5/7/74, effective 6/6/74.] Repealed by 98-05-046, filed 2/13/98, effective 4/15/98. Statutory Authority: RCW 49.17.010, [49.17].040, [49.17].050 and [49.17].060.

296-155-48517 Table J-15. [Order 76-29, Table J-15 (codified as WAC 296-155-48517), filed 9/30/76; Order 74-26, § 296-155-485 (part), Table J-15, filed 5/7/74, effective 6/6/74.] Repealed by 98-05-046, filed 2/13/98, effective 4/15/98.

Statutory Authority: RCW 49.17.010, [49.17].040, [49.17].050 and [49.17].060.

296-155-48518 Table J-16. [Order 76-29, Table J-16 (codified as WAC 296-155-48518), filed 9/30/76; Order 74-26, § 296-155-485 (part), Table J-16, filed 5/7/74, effective 6/6/74.] Repealed by 98-05-046, filed 2/13/98, effective 4/15/98. Statutory Authority: RCW 49.17.010, [49.17].040, [49.17].050 and [49.17].060.

296-155-48519 Table J-17. [Order 76-29, Table J-17 (codified as WAC 296-155-48519), filed 9/30/76; Order 74-26, § 296-155-485 (part), Table J-17, filed 5/7/74, effective 6/6/74.] Repealed by 98-05-046, filed 2/13/98, effective 4/15/98. Statutory Authority: RCW 49.17.010, [49.17].040, [49.17].050 and [49.17].060.

296-155-48523 Manually propelled mobile ladder stands and scaffolds (towers). [Statutory Authority: Chapter 49.17 RCW. 94-15-096 (Order 94-07), § 296-155-48523, filed 7/20/94, effective 9/20/94. Statutory Authority: RCW 49.17.040 and 49.17.050. 86-03-074 (Order 86-14), § 296-155-48523, filed 1/21/86.] Repealed by 98-05-046, filed 2/13/98, effective 4/15/98. Statutory Authority: RCW 49.17.010, [49.17].040, [49.17].050 and [49.17].-060.

296-155-48525 Manually propelled elevating work platforms. [Statutory Authority: RCW 49.17.040 and 49.17.050. 86-03-74 (Order 86-14), § 296-155-48525, filed 1/21/86.] Repealed by 98-05-046, filed 2/13/98, effective 4/15/98. Statutory Authority: RCW 49.17.010, [49.17].040, [49.17].050 and [49.17].060.

296-155-48527 Self propelled elevating work platforms. [Statutory Authority: Chapter 49.17 RCW. 92-17-022 (Order 92-06), § 296-155-48527, filed 8/10/92, effective 9/10/92. Statutory Authority: RCW 49.17.040 and 49.17.050. 86-03-074 (Order 86-14), § 296-155-48527, filed 1/21/86.] Repealed by 98-05-046, filed 2/13/98, effective 4/15/98. Statutory Authority: RCW 49.17.010, [49.17].040, [49.17].050 and [49.17].060.

296-155-48529 Boom supported elevating work platforms. [Statutory Authority: Chapter 49.17 RCW. 92-17-022 (Order 92-06), § 296-155-48529, filed 8/10/92, effective 9/10/92; 91-03-044 (Order 90-18), § 296-155-48529, filed 1/10/91, effective 2/12/91; 89-11-035 (Order 89-03), § 296-155-48529, filed 5/15/89, effective 6/30/89. Statutory Authority: RCW 49.17.040 and 49.17.050. 86-03-074 (Order 86-14), § 296-155-48529, filed 1/21/86.] Repealed by 98-05-046, filed 2/13/98, effective 4/15/98. Statutory Authority: RCW 49.17.010, [49.17].040, [49.17].050 and [49.17].060.

296-155-48531 Vehicle mounted elevating and rotating aerial devices. [Statutory Authority: Chapter 49.17 RCW. 95-10-016, § 296-155-48531, filed 4/25/95, effective 10/1/95; 94-15-096 (Order 94-07), § 296-155-48531, filed 7/20/94, effective 9/20/94; 92-17-022 (Order 92-06), § 296-155-48531, filed 8/10/92, effective 9/10/92; 91-03-044 (Order 90-18), § 296-155-48531, filed 1/10/91, effective 2/12/91; 90-17-051 (Order 90-10), § 296-155-48531, filed 8/13/90, effective 9/24/90. Statutory Authority: RCW 49.17.040 and 49.17.050. 86-03-074 (Order 86 -14), § 296-155-48531, filed 1/21/86.] Repealed by 98-05-046, filed 2/13/98, effective 4/15/98. Statutory Authority: RCW 49.17.010, [49.17].040, [49.17].050 and [49.17].060.

296-155-48533 Crane or derrick suspended personnel platforms. [Statutory Authority: RCW 49.17.040, [49.17.]050 and [49.17.]060. 96-24-051, § 296-155-48533, filed 11/27/96, effective 2/1/97. Statutory Authority: Chapter 49.17 RCW. 95-10-016, § 296-155-48533, filed 4/25/95, effective 10/1/95; 94-15-096 (Order 94-07), § 296-155-48533, filed 7/20/94, effective 9/20/94; 91-03-044 (Order 90-18), § 296-155-48533, filed 1/10/91, effective 2/12/91; 90-03-029 (Order 89-20), § 296-155-48533, filed 1/11/90, effective 2/26/90; 89-11-035 (Order 89-03), § 296-155-48533, filed 5/15/89, effective 6/30/89. Statutory Authority: RCW 49.17.040 and 49.17.050. 86-03-074 (Order 86-14), § 296-155-48533, filed 1/21/86.] Repealed by 98-05-046, filed 2/13/98, effective 4/15/98. Statutory Authority: RCW 49.17.010, [49.17].040, [49.17].050 and [49.17].060.

296-155-48536 Forklift elevated work platforms. [Statutory Authority: Chapter 49.17 RCW and RCW 49.17.040, [49.17].050 and [49.17].060. 92-22-067 (Order 92-06), § 296-155-48536, filed 10/30/92, effective 12/8/92. Statutory Authority: Chapter 49.17 RCW. 89-11 -035 (Order 89-03), § 296-155-48536, filed 5/15/89, effective 6/30/89.] Repealed by 98-05-046, filed 2/13/98, effective 4/15/98. Statutory Authority: RCW 49.17.010, [49.17].040, [49.17].050 and [49.17].060.

296-155-493 Training. [Statutory Authority: RCW 49.17.010, [49.17].040, [49.17].050 and [49.17].060. 98-05-046, § 296-155-493, filed 2/13/98, effective 4/15/98.] Repealed by 05-01-054, filed 12/7/04, effective 3/1/05. Statutory Authority: RCW 49.17.010, 49.17.040, 49.17.050, 49.17.060.

296-155-494 Non-Mandatory Appendix A to Part J-1, Scaffold Specifications. [Statutory Authority: RCW 49.17.010, [49.17].040, [49.17].050 and [49.17].060. 98-05-046, § 296-155-494, filed 2/13/98, effective 4/15/98.] Repealed by 05-01-054, filed 12/7/04, effective 3/1/05. Statutory Authority: RCW 49.17.010, 49.17.040, 49.17.050, 49.17.060.

296-155-497 Non-Mandatory Appendix D to Part J-1, List of Training Topics for Scaffold Erectors and Dismantlers. [Statutory Authority: RCW 49.17.010, [49.17].040, [49.17].050 and [49.17].060. 98-05-046, § 296-155-497, filed 2/13/98, effective 4/15/98.] Repealed by 05-01-054, filed 12/7/04, effective 3/1/05. Statutory Authority: RCW 49.17.010, 49.17.040, 49.17.050, 49.17.060.

296-155-498 Non-Mandatory Appendix E to Part J-1, Drawings and Illustrations. [Statutory Authority: RCW 49.17.010, [49.17].040, [49.17].050 and [49.17].060. 98-05-046, § 296-155-498, filed 2/13/98, effective 4/15/98.] Repealed by 05-01-054, filed 12/7/04, effective 3/1/05. Statutory Authority: RCW 49.17.010, 49.17.040, 49.17.050, 49.17.060.

296-155-50501 Appendix—Roofs. [Statutory Authority: RCW 49.17.040, 49.17.050 and 49.17.240. 81-13-053 (Order 81-9), § 296-155-50501, filed 6/17/81.] Repealed by 91-03-044 (Order 90-18), filed 1/10/91, effective 2/12/91. Statutory Authority: Chapter 49.17 RCW.

296-155-575 Helicopters and helicopter cranes. [Statutory Authority: RCW 49.17.010, [49.17].040, and [49.17].050. 01-17-033, § 296-155-575, filed 8/8/01, effective 9/1/01. Statutory Authority: Chapter 49.17 RCW. 94-15-096 (Order 94-07), § 296-155-575, filed 7/20/94, effective 9/20/94. Statutory Authority: RCW 49.17.040 and 49.17.050. 86-03-074 (Order 86-14), § 296-155-575, filed 1/21/86; Order 76-28, § 296-155-575, filed 9/28/76; Order 74-26, § 296-155-575, filed 5/7/74, effective 6/6/74.] Repealed by 04-09-099, filed 4/20/04, effective 9/1/04. Statutory Authority: RCW 49.17.010, 49.17.040, 49.17.050, and 49.17.060. Later promulgation, see chapter 296-829 WAC.

296-155-576 Figure L-1. [Order 74-26, Figure L-1 (codified as WAC 296-155-576), filed 5/7/74, effective 6/6/74. Formerly WAC 296-155-575 (part).] Repealed by 04-09-099, filed 4/20/04, effective 9/1/04. Statutory Authority: RCW 49.17.010, 49.17.040, 49.17.050, and 49.17.060. Later promulgation, see chapter 296-829 WAC.

296-155-580 Aerial lifts. [Statutory Authority: RCW 49.17.040 and 49.17.050. 86-03-074 (Order 86-14), § 296-155-580, filed 1/21/86; Order 74-26, § 296-155-580, filed 5/7/74, effective 6/6/74.] Repealed by 90-17-051 (Order 90-10), filed 8/13/90, effective 9/24/90. Statutory Authority: Chapter 49.17 RCW.

296-155-617 Servicing multipiece and single-piece rim wheels. [Statutory Authority: RCW 49.17.040 and 49.17.050. 86-03-074 (Order 86-14), § 296-155-617, filed 1/21/86.] Repealed by 04-20-079, filed 10/5/04, effective 2/1/05. Statutory Authority: RCW 49.17.010, 49.17.040, 49.17.050, 49.17.060. Later promulgation, see chapter 296-864 WAC.

296-155-61701 Scope. [Statutory Authority: RCW 49.17.040 and 49.17.050. 86-03-074 (Order 86-14), § 296-155-61701, filed 1/21/86.] Repealed by 04-20-079, filed 10/5/04, effective 2/1/05. Statutory Authority: RCW 49.17.010, 49.17.040, 49.17.050, 49.17.060. Later promulgation, see chapter 296-864 WAC.

296-155-61703 Definitions. [Statutory Authority: RCW 49.17.040 and 49.17.050. 86-03-074 (Order 86-14), § 296-155-61703, filed 1/21/86.] Repealed by 04-20-079, filed 10/5/04, effective 2/1/05. Statutory Authority: RCW 49.17.010, 49.17.040, 49.17.050, 49.17.060. Later promulgation, see chapter 296-864 WAC.

296-155-61705 Employee training. [Statutory Authority: Chapter 49.17 RCW. 94-15-096 (Order 94-07), § 296-155-61705, filed 7/20/94, effective 9/20/94. Statutory Authority: RCW 49.17.040 and 49.17.050. 86-03-074 (Order 86-14), §

296-155-61705, filed 1/21/86.] Repealed by 04-20-079, filed 10/5/04, effective 2/1/05. Statutory Authority: RCW 49.17.010, 49.17.040, 49.17.050, 49.17.060. Later promulgation, see chapter 296-864 WAC.

296-155-61707 Tire servicing equipment. [Statutory Authority: RCW 49.17.040 and 49.17.050. 86-03-074 (Order 86-14), § 296-155-61707, filed 1/21/86.] Repealed by 04-20-079, filed 10/5/04, effective 2/1/05. Statutory Authority: RCW 49.17.010, 49.17.040, 49.17.050, 49.17.060. Later promulgation, see chapter 296-864 WAC.

296-155-61709 Wheel component acceptability. [Statutory Authority: RCW 49.17.040 and 49.17.050. 86-03-074 (Order 86-14), § 296-155-61709, filed 1/21/86.] Repealed by 04-20-079, filed 10/5/04, effective 2/1/05. Statutory Authority: RCW 49.17.010, 49.17.040, 49.17.050, 49.17.060. Later promulgation, see chapter 296-864 WAC.

296-155-61711 Safe operating procedure—Multipiece rim wheels. [Statutory Authority: Chapter 49.17 RCW. 94-15-096 (Order 94-07), § 296-155-61711, filed 7/20/94, effective 9/20/94. Statutory Authority: RCW 49.17.040 and 49.17.050. 86-03-074 (Order 86-14), § 296-155-61711, filed 1/21/86.] Repealed by 04-20-079, filed 10/5/04, effective 2/1/05. Statutory Authority: RCW 49.17.010, 49.17.040, 49.17.050, 49.17.060. Later promulgation, see chapter 296-864 WAC.

296-155-61713 Safe operating procedure—Single-piece rim wheels. [Statutory Authority: Chapter 49.17 RCW. 94-15-096 (Order 94-07), § 296-155-61713, filed 7/20/94, effective 9/20/94. Statutory Authority: RCW 49.17.040 and 49.17.050. 86-03-074 (Order 86-14), § 296-155-61713, filed 1/21/86.] Repealed by 04-20-079, filed 10/5/04, effective 2/1/05. Statutory Authority: RCW 49.17.010, 49.17.040, 49.17.050, 49.17.060. Later promulgation, see chapter 296-864 WAC.

296-155-65505 Sewage piping system. [Statutory Authority: RCW 49.17.040 and 49.17.050. 86-03-074 (Order 86-14), § 296-155-65505, filed 1/21/86.] Repealed by 91-03-044 (Order 90-18), filed 1/10/91, effective 2/12/91. Statutory Authority: Chapter 49.17 RCW.

296-155-660 Specific excavation requirements. [Statutory Authority: RCW 49.17.040 and 49.17.050. 86-03-074 (Order 86-14), § 296-155-660, filed 1/21/86. Statutory Authority: RCW 49.17.040, 49.17.050 and 49.17.240. 81-13-053 (Order 81-9), § 296-155-660, filed 6/17/81; Order 76-29, § 296-155-660, filed 9/30/76; Order 74-26, § 296-155-660, filed 5/7/74, effective 6/6/74.] Repealed by 91-03-044 (Order 90-18), filed 1/10/91, effective 2/12/91. Statutory Authority: Chapter 49.17 RCW.

296-155-66005 Borrow pits. [Statutory Authority: RCW 49.17.040 and 49.17.050. 86-03-074 (Order 86-14), § 296-155-66005, filed 1/21/86.] Repealed by 91-03-044 (Order 90-18), filed 1/10/91, effective 2/12/91. Statutory Authority: Chapter 49.17 RCW.

296-155-665 Specific trenching requirements. [Statutory Authority: RCW 49.17.040 and 49.17.050. 86-03-074 (Order 86-14), § 296-155-665, filed 1/21/86; 85-10-004 (Order 85-09), § 296-155-665, filed 4/19/85. Statutory Authority: RCW 49.17.040, 49.17.050 and 49.17.240. 81-13-053 (Order 81-9), § 296-155-665, filed 6/17/81; Order 77-12, § 296-155-665, filed 7/11/77; Order 76-29, § 296-155-665, filed 9/30/76; Order 74-26, § 296-155-665, filed 5/7/74, effective 6/6/74.] Repealed by 91-03-044 (Order 90-18), filed 1/10/91, effective 2/12/91. Statutory Authority: Chapter 49.17 RCW.

296-155-66501 Table N-1. [Statutory Authority: RCW 49.17.040 and 49.17.050. 86-03-074 (Order 86-14), § 296-155-66501, filed 1/21/86; 82 -13-045 (Order 82-22), § 296-155-66501, filed 6/11/82; Order 76-29, Table N-1 (codified as WAC 296-155-66501), filed 9/30/76; Order 74-26, § 296-155-665 (part), Table N-1, filed 5/7/74, effective 6/6/74.] Repealed by 91-03-044 (Order 90-18), filed 1/10/91, effective 2/12/91. Statutory Authority: Chapter 49.17 RCW.

296-155-66502 Table N-2. [Statutory Authority: RCW 49.17.040 and 49.17.050. 86-03-074 (Order 86-14), § 296-155-66502, filed 1/21/86; Order 76-29, Table N-2 (codified as WAC 296-155-66502), filed 9/30/76; Order 74-26, § 296-155-665 (part), Table N-2, filed 5/7/74, effective 6/6/74.] Repealed by 91-03-044 (Order 90-18), filed 1/10/91, effective 2/12/91. Statutory Authority: Chapter 49.17 RCW.

296-155-66503 Table N-3. [Order 76-29, Table N-3 (codified as WAC 296-155-66503), filed 9/30/76; Order 74-26, § 296-155-665 (part), Table N-3, filed 5/7/74, effective 6/6/74.] Repealed by 91-03-044 (Order 90-18), filed 1/10/91, effective 2/12/91. Statutory Authority: Chapter 49.17 RCW.

296-155-66504 Table N-4. [Order 76-29, Table N-4 (codified as WAC 296-155-66504), filed 9/30/76; Order 74-26, § 296-155-665 (part), Table N-4, filed 5/7/74, effective 6/6/74.] Repealed by 91-03-044 (Order 90-18), filed 1/10/91, effective 2/12/91. Statutory Authority: Chapter 49.17 RCW.

296-155-66505 Table N-5. [Statutory Authority: RCW 49.17.040, 49.17.050 and 49.17.240. 81-13-053 (Order 81-9), § 296-155-66505, filed 6/17/81; Order 76-29, Table N-5 (codified as WAC 296-155-66505), filed 9/30/76; Order 74-26, § 296-155-665 (part), Table N-5, filed 5/7/74, effective 6/6/74.] Repealed by 91-03-044 (Order 90 -18), filed 1/10/91, effective 2/12/91. Statutory Authority: Chapter 49.17 RCW.

296-155-692 Requirements for lift-slab operations. [Statutory Authority: Chapter 49.17 RCW. 89-11-035 (Order 89-03), § 296-155-692, filed 5/15/89, effective 6/30/89.] Repealed by 90-03-029 (Order 89-20), filed 1/11/90, effective 2/26/90. Statutory Authority: Chapter 49.17 RCW.

296-155-700 General requirements. [Statutory Authority: RCW 49.17.010, [49.17].040, [49.17].050 and [49.17].060. 98-05-046, § 296-155-700, filed 2/13/98, effective 4/15/98. Statutory Authority: Chapter 49.17 RCW. 94-15-096 (Order 94-07), § 296-155-700, filed 7/20/94, effective 9/20/94; 91-03-044 (Order 90-18), § 296-155-700, filed 1/10/91, effective 2/12/91. Statutory Authority: RCW 49.17.040 and 49.17.050. 86-03-074 (Order 86-14), § 296-155-700, filed 1/21/86; Order 76-29, § 296-155-700, filed 9/30/76; Order 74-26, § 296-155-700, filed 5/7/74, effective 6/6/74.] Repealed by 02-13-115, filed 6/19/02, effective 9/1/02. Statutory Authority: RCW 49.17.010, [49.17].040, and [49.17].050.

296-155-705 Flooring requirements. [Statutory Authority: Chapter 49.17 RCW. 91-03-044 (Order 90-18), § 296-155-705, filed 1/10/91, effective 2/12/91. Statutory Authority: RCW 49.17.040 and 49.17.050. 86-03-074 (Order 86-14), § 296-155-705, filed 1/21/86; Order 76-29, § 296-155-705, filed 9/30/76; Order 74-26, § 296-155-705, filed 5/7/74, effective 6/6/74.] Repealed by 02-13-115, filed 6/19/02, effective 9/1/02. Statutory Authority: RCW 49.17.010, [49.17].040, and [49.17].050.

296-155-710 Structural steel assembly. [Order 74-26, § 296-155-710, filed 5/7/74, effective 6/6/74.] Repealed by 02-13-115, filed 6/19/02, effective 9/1/02. Statutory Authority: RCW 49.17.010, [49.17].040, and [49.17].050.

296-155-715 Bolting, riveting, fitting-up, and plumbing-up. [Statutory Authority: RCW 49.17.040, [49.17.]050 and [49.17.]060. 96-24-051, § 296-155-715, filed 11/27/96, effective 2/1/97. Statutory Authority: Chapter 49.17 RCW. 95-10-016, § 296-155-715, filed 4/25/95, effective 10/1/95; 94-15-096 (Order 94-07), § 296-155-715, filed 7/20/94, effective 9/20/94; Order 76-29, § 296-155-715, filed 9/30/76; Order 74-26, § 296-155-715, filed 5/7/74, effective 6/6/74.] Repealed by 02-13-115, filed 6/19/02, effective 9/1/02. Statutory Authority: RCW 49.17.010, [49.17].040, and [49.17].050.

296-155-720 Safe walking surfaces on structural members. [Statutory Authority: Chapter 49.17 RCW. 91-03-044 (Order 90-18), § 296-155-720, filed 1/10/91, effective 2/12/91. Statutory Authority: RCW 49.17.040 and 49.17.050. 86-03-074 (Order 86-14), § 296-155-720, filed 1/21/86; Order 74-26, § 296-155-720, filed 5/7/74, effective 6/6/74.] Repealed by 02-13-115, filed 6/19/02, effective 9/1/02. Statutory Authority: RCW 49.17.010, [49.17].040, and [49.17].050.

296-155-750 Masonry construction. [Statutory Authority: RCW 49.17.040 and 49.17.050. 86-03-074 (Order 86-14), § 296-155-750, filed 1/21/86; Order 74-26, § 296-155-750, filed 5/7/74, effective 6/6/74.] Repealed by 89-11-035 (Order 89-03), filed 5/15/89, effective 6/30/89. Statutory Authority: Chapter 49.17 RCW.

296-155-760 Concrete finishing. [Order 74-26, § 296-155-760, filed 5/7/74, effective 6/6/74.] Repealed by 86-03-074 (Order 86-14), filed 1/21/86. Statutory Authority: RCW 49.17.040 and 49.17.050.

296-155-850 Definitions applicable to this part. [Order 74-26, § 296-155-850, filed 5/7/74, effective 6/6/74.] Repealed by 86-03-074 (Order 86-14), filed 1/21/86. Statutory Authority: RCW 49.17.040 and 49.17.050.

296-155-855	General provisions. [Order 74-26, § 296-155-855, filed 5/7/74, effective 6/6/74.] Repealed by 86-03-074 (Order 86-14), filed 1/21/86. Statutory Authority: RCW 49.17.040 and 49.17.050.
296-155-860	Blaster qualifications. [Order 74-26, § 296-155-860, filed 5/7/74, effective 6/6/74.] Repealed by 86-03-074 (Order 86-14), filed 1/21/86. Statutory Authority: RCW 49.17.040 and 49.17.050.
296-155-865	Surface transportation of explosives. [Order 74-26, § 296-155-865, filed 5/7/74, effective 6/6/74.] Repealed by 86-03-074 (Order 86-14), filed 1/21/86. Statutory Authority: RCW 49.17.040 and 49.17.050.
296-155-870	Underground transportation of explosives. [Order 74-26, § 296-155-870, filed 5/7/74, effective 6/6/74.] Repealed by 86-03-074 (Order 86-14), filed 1/21/86. Statutory Authority: RCW 49.17.040 and 49.17.050.
296-155-875	Storage of explosives and blasting agents. [Order 74-26, § 296-155-875, filed 5/7/74, effective 6/6/74.] Repealed by 86-03-074 (Order 86-14), filed 1/21/86. Statutory Authority: RCW 49.17.040 and 49.17.050.
296-155-880	Loading of explosives or blasting agents. [Order 74-26, § 296-155-880, filed 5/7/74, effective 6/6/74.] Repealed by 86-03-074 (Order 86-14), filed 1/21/86. Statutory Authority: RCW 49.17.040 and 49.17.050.
296-155-885	Initiation of explosive charges—Electric blasting. [Order 74-26, § 296-155-885, filed 5/7/74, effective 6/6/74.] Repealed by 86-03-074 (Order 86-14), filed 1/21/86. Statutory Authority: RCW 49.17.040 and 49.17.050.
296-155-890	Use of safety fuse. [Order 76-29, § 296-155-890, filed 9/30/76; Order 74-26, § 296-155-890, filed 5/7/74, effective 6/6/74.] Repealed by 86-03-074 (Order 86-14), filed 1/21/86. Statutory Authority: RCW 49.17.040 and 49.17.050.
296-155-895	Use of detonating cord. [Order 74-26, § 296-155-895, filed 5/7/74, effective 6/6/74.] Repealed by 86-03-074 (Order 86-14), filed 1/21/86. Statutory Authority: RCW 49.17.040 and 49.17.050.
296-155-900	Firing the blast. [Order 74-26, § 296-155-900, filed 5/7/74, effective 6/6/74.] Repealed by 86-03-074 (Order 86-14), filed 1/21/86. Statutory Authority: RCW 49.17.040 and 49.17.050.
296-155-905	Inspection after blasting. [Order 74-26. § 296-155-905, filed 5/7/74, effective 6/6/74.] Repealed by 86-03-074 (Order 86-14), filed 1/21/86. Statutory Authority: RCW 49.17.040 and 49.17.050.
296-155-910	Misfires. [Order 74-26, § 296-155-910, filed 5/7/74, effective 6/6/74.] Repealed by 86-03-074 (Order 86-14), filed 1/21/86. Statutory Authority: RCW 49.17.040 and 49.17.050.
296-155-915	Underwater blasting. [Order 74-26, § 296-155-915, filed 5/7/74, effective 6/6/74.] Repealed by 86-03-074 (Order 86-14), filed 1/21/86. Statutory Authority: RCW 49.17.040 and 49.17.050.
296-155-920	Blasting in excavation work under compressed air. [Order 74-26, § 296-155-920, filed 5/7/74, effective 6/6/74.] Repealed by 86-03-074 (Order 86-14), filed 1/21/86. Statutory Authority: RCW 49.17.040 and 49.17.050.

Reviser's note: Order 74-26, filed May 7, 1974, both repealed chapter 296-40 WAC, entitled "Safety Standards—Construction Work," and adopted this new chapter as a replacement. The effective date of this order is June 6, 1974.

PART A
GENERAL SAFETY AND HEALTH PROVISIONS

WAC 296-155-001 Foreword. (1) This chapter has been compiled with the purpose of consolidating safety and health construction safety standards into one chapter of the Washington Administrative Code, by the promulgation of the standards contained herein. It is also the intent that the safety standards of the Washington state department of labor and industries, will be at least as effective as those adopted by the U.S. Department of Labor and administered by the Occupational Safety and Health Administration as published in the Code of Federal Regulations. The department of labor and industries is incorporating many of the preexisting construction safety standards and adding new standards under this chapter.

(2) Attention is called to the fact that certain Washington state standards contain standards and/or regulations applicable to all industries. These include, but are not limited to: The code for boilers and pressure vessels; the code for pressure piping; the general industrial safety and health standards; the general occupational health standards; regulations of the department of social and health services.

[Statutory Authority: Chapter 49.17 RCW. 94-15-096 (Order 94-07), § 296-155-001, filed 7/20/94, effective 9/20/94; Order 76-29, § 296-155-001, filed 9/30/76; Order 74-26, § 296-155-001, filed 5/7/74, effective 6/6/74.]

WAC 296-155-003 Subsections, subdivisions, items, subitems, and segments. (1) That portion of section numeration appearing after the chapter designation appears in either a three digit or a five digit format (e.g. WAC 296-24-330 and 296-24-30002). The final two digits of the section number are implied decimal extensions of the first three digits and represent a further division of the three digit enumeration.

(2) Sections of this chapter may be divided into subsections (1), (2), (3), etc., which may in turn be divided into subdivisions (a), (b), (c), etc., which may be further divided into items (i), (ii), (iii), etc., which may be further divided into subitems (A), (B), (C), etc., which may be further divided into segments (aa) [(I)], (bb) [(II)], (cc) [(III)], etc., all according to the following hierarchy, e.g.

Sections	296-24-330 and 296-24-33002
Subsections	(1) (2)
Subdivisions	(a) (b)
Items	(i) (ii)
Subitems	(A) (B)
Segments	I II

Note: "Part" as used in this standard means a major division of this chapter relating to a specific topic or topics and containing various related sections.

[Statutory Authority: RCW 49.17.040 and 49.17.050. 86-03-074 (Order 86-14), § 296-155-003, filed 1/21/86; Order 74-26, § 296-155-003, filed 5/7/74, effective 6/6/74.]

WAC 296-155-005 Purpose and scope. (1) The standards included in this chapter apply throughout the state of Washington, to any and all work places subject to the Washington Industrial Safety and Health Act (chapter 49.17 RCW), where construction, alteration, demolition, related inspection, and/or maintenance and repair work, including painting and decorating, is performed. These standards are minimum safety requirements with which all industries must comply when engaged in the above listed types of work.

(2) If a provision of this chapter conflicts with a provision of the general safety and health standard (chapter 296-24 WAC), the general occupational health standard (chapter 296-62 WAC), or the safety and health core rules (chapter

296-800 WAC), the provision of this chapter shall prevail. When a provision of this chapter conflicts with a provision of another vertical safety standard applying to the place of work, the provisions of the vertical standard of specific application shall prevail.

[Statutory Authority: RCW 49.17.010, [49.17].040, and [49.17].050. 01-11-038, § 296-155-005, filed 5/9/01, effective 9/1/01. Statutory Authority: RCW 49.17.040 and 49.17.050. 86-03-074 (Order 86-14), § 296-155-005, filed 1/21/86. Statutory Authority: RCW 49.17.040, 49.17.050, 49.17.240, chapters 42.30 and 43.22 RCW. 80-17-014 (Order 80-20), § 296-155-005, filed 11/13/80; Order 76-29, § 296-155-005, filed 9/30/76; Order 74-26, § 296-155-005, filed 5/7/74, effective 6/6/74.]

WAC 296-155-006 Equipment approval by nonstate agency or organization. Whenever a provision of this chapter states that only that equipment or those processes approved by an agency or organization other than the department of labor and industries, such as the Underwriters Laboratories or the Mine Safety and Health Administration (MSHA) and the National Institute for Occupational Safety and Health (NIOSH), shall be utilized, that provision shall be construed to mean that approval of such equipment or process by the designated agency or group shall be prima facie evidence of compliance with the provisions of this chapter.

[Statutory Authority: Chapter 49.17 RCW. 94-15-096 (Order 94-07), § 296-155-006, filed 7/20/94, effective 9/20/94; Order 74-26, § 296-155-006, filed 5/7/74, effective 6/6/74.]

WAC 296-155-007 Incorporation of standards of national organization. Whenever a provision of this chapter incorporates by reference a national code or portion thereof which has been adopted by and is currently administered by another state agency, compliance with those provisions adopted and administered by such other state agency, if from a more recent edition of such national code, will be deemed to be prima facie evidence of compliance with the provisions of this chapter.

[Order 74-26, § 296-155-007, filed 5/7/74, effective 6/6/74.]

WAC 296-155-008 Incorporation of standards of federal agency. (1) Whenever a provision of this chapter incorporates therein provisions of the Code of Federal Regulations (CFR) and changes thereto, or any other regulations adopted by an agency of the federal government, that provision of this chapter shall be construed to mean that compliance with such regulations shall be prima facie evidence of compliance with the provisions of this chapter.

(2) Whenever a provision of this chapter incorporates therein provisions of the Code of Federal Regulations, the provisions so incorporated shall be those in effect on the date of effectiveness of this chapter, unless the content of the incorporating section specifies otherwise.

[Order 76-29, § 296-155-008, filed 9/30/76; Order 74-26, § 296-155-008, filed 5/7/74, effective 6/6/74.]

WAC 296-155-009 Equipment whether or not owned by, or under control of the employer. (1) It is the employer's responsibility to ensure that any defective equipment or tools are not used.

(2) When any tool or piece of equipment fails to meet the requirements of any safety standard or recognized safe practice, the tool or equipment shall not be used.

[Statutory Authority: RCW 49.17.040 and 49.17.050. 86-03-074 (Order 86-14), § 296-155-009, filed 1/21/86.]

WAC 296-155-010 Variance and procedure. Realizing that conditions may exist in operations under which certain state standards will not have practical application, the director of the department of labor and industries or his/her authorized representative may, pursuant to this section, sections eight or nine of the Washington Industrial Safety and Health Act (chapter 80, Laws of 1973, RCW 49.17.080 and 49.17.090) and appropriate administrative rules of this state and the department of labor and industries and upon receipt of application and after adequate investigation by the department, permit a variation from these requirements when other means of providing an equivalent measure of protection are afforded. Such variation granted shall be limited to the particular case or cases covered in the application for variance and may be revoked for cause. The order granting a variance shall be conspicuously posted on the premises and shall remain posted during the time it is in effect. A copy of the variance shall be available at the work site. All requests for variances from safety and health standards included in this chapter, shall be made in writing to the director of the department of labor and industries at Olympia, Washington, or his/her duly authorized representative, Department of Labor and Industries, P.O. Box 44600, Olympia, Washington 98504-4600.

[Statutory Authority: Chapter 49.17 RCW. 94-15-096 (Order 94-07), § 296-155-010, filed 7/20/94, effective 9/20/94. Statutory Authority: RCW 49.17.040 and 49.17.050. 86-03-074 (Order 86-14), § 296-155-010, filed 1/21/86; Order 74-26, § 296-155-010, filed 5/7/74, effective 6/6/74.]

WAC 296-155-012 Definitions applicable to all sections of this chapter.

Note: Unless the context indicates otherwise, words used in this chapter shall have the meaning given in this section. Certain parts of this chapter contain definitions as they apply to that particular part.

"Approved" means approved by the director of the department of labor and industries or his/her authorized representative: Provided, however, That should a provision of this chapter state that approval by an agency or organization other than the department of labor and industries is required, such as Underwriters' Laboratories or the bureau of mines, the provisions of WAC 296-155-006 shall apply.

"Assistant director" means the individual in charge of the division of consultation and compliance, department of labor and industries, or an authorized representative.

"Authorized person" means a person approved or assigned by the employer to perform a specific type of duty or duties or be at a specific location or locations at the workplace.

"Competent person" means one who is capable of identifying existing and predictable hazards in the surroundings or working conditions which are unsanitary, hazardous, or dangerous to employees, and who has authorization to take prompt corrective action to eliminate them.

"Confined space" means a space that:

(1) Is large enough and so configured that an employee can bodily enter and perform assigned work; and

(2) Has limited or restricted means for entry or exit (for example, tanks, vessels, silos, storage bins, hoppers, vaults, and pits are spaces that may have limited means of entry); and

(3) Is not designed for continuous employee occupancy.

"Construction work" shall mean and include all or any part of excavation, construction, erection, alteration, repair, demolition, and dismantling, of buildings and other structures and all operations in connection therewith; the excavation, construction, alteration and repair of sewers, trenches, caissons, conduits, pipe lines, roads and all operations pertaining thereto; the moving of buildings and other structures, and to the construction, alteration, repair, or removal of wharfs, docks, bridges, culverts, trestles, piers, abutments or any other construction, alteration, repair or removal work related thereto.

"Defect" means any characteristic or condition which tends to weaken or reduce the strength of the tool, object, or structure of which it is a part.

"Department" means the department of labor and industries.

"Designated person" means "authorized person" as defined in this section.

"Director" means the director of the department of labor and industries, or his/her designated representative.

"Division" means the division of consultation and compliance of the department.

"Employer" means any person, firm, corporation, partnership, business trust, legal representative, or other business entity which engages in any business, industry, profession, or activity in this state and employs one or more employees or who contracts with one or more persons, the essence of which is the personal labor of such person or persons and includes the state, counties, cities, and all municipal corporations, public corporations, political subdivisions of the state, and charitable organizations: Provided, that any person, partnership, or business entity not having employees, and who is covered by the industrial insurance act shall be considered both an employer and an employee.

"Equipment" means all machinery, devices, tools, facilities, safeguards, and protective construction used in connection with construction operations.

"Ground fault circuit interrupter" means a fast acting circuit breaker that is sensitive to very low levels of current leakage to ground. The device is designed to limit the electric shock to a current and time duration below that which can cause serious injury.

"Hazard" means that condition, potential or inherent, which is likely to cause injury, death, or occupational disease.

"Hazardous substance" means a substance which, by reason of being explosive, flammable, poisonous, corrosive, oxidizing, irritating, or otherwise harmful, is likely to cause death or injury.

"Maintenance" means the work of keeping a building, machine, roadway, etc., in a state of good repair.

"Part" means a major division, of this chapter, relating to a specific topic or topics and containing various sections, subsections, etc.

"Permit-required confined space (permit space)" means a confined space that has one or more of the following characteristics:

(1) Contains or has a potential to contain a hazardous atmosphere;

(2) Contains a material that has the potential for engulfing an entrant;

(3) Has an internal configuration such that an entrant could be trapped or asphyxiated by inwardly converging walls or by a floor which slopes downward and tapers to a smaller cross-section; or

(4) Contains any other recognized serious safety or health hazard.

"Qualified" means one who, by possession of a recognized degree, certificate, or professional standing, or who by extensive knowledge, training, and experience, has successfully demonstrated their ability to solve or resolve problems relating to the subject matter, the work, or the project.

"Repair" means to restore a building, machine, roadway, etc., to an original state after damage or decay.

"Safety factor" means the ratio of the ultimate breaking strength of a member or piece of material or equipment to the actual working stress or safe load when in use.

"Safety and health standard" means a standard which requires the adoption or use of one or more practices, means, methods, operations, or processes reasonably necessary or appropriate to provide safe or healthful employment and places of employment.

"Shall" means that the provision(s) of the standard are mandatory.

"Substantial" means constructed of such strength, of such material, and of such workmanship, that the object referred to will withstand all normal wear, shock and usage.

"Standard safeguard" means a device designed and constructed with the object of removing the hazard of accident incidental to the machine, appliance, tool, building, or equipment to which it is attached.

Standard safeguards shall be constructed of either metal or wood or other suitable material or a combination of these. The final determination of the sufficiency of any safeguard rests with the director of the department of labor and industries through the division of consultation and compliance.

"Suitable" means that which fits, or has the qualities or qualifications to meet a given purpose, occasion, condition, function, or circumstance.

"Working day" means a calendar day, except Saturdays, Sundays, and legal holidays as set forth in RCW 1.16.050, as now or hereafter amended, and for the purposes of the computation of time within which an act is to be done under the provisions of this chapter, shall be computed by excluding the first working day and including the last working day.

"Worker," "personnel," "man," "person," "employee," and other terms of like meaning, unless the context of the provision containing such term indicates otherwise, mean an employee of an employer who is employed in the business of their employer whether by way of manual labor or otherwise and every person in this state who is engaged in the employment of or who is working under an independent contract the essence of which is their personal labor for an employer whether by manual labor or otherwise.

"Work place" means any plant, yard, premises, room, or other place where an employee or employees are employed for the performance of labor or service over which the employer has the right of access or control, and includes, but is not limited to, all work places covered by industrial insurance under Title 51 RCW, as now or hereafter amended.

Abbreviations used in this chapter:

"ANSI" means American National Standards Institute.

"API" means American Petroleum Institute.

"ASA" means American Standards Association.

"ASAE" means American Society of Agricultural Engineers.

"ASHRE" means American Society of Heating and Refrigeration Engineers.

"ASME" means American Society of Mechanical Engineers.

"ASTM" means American Society of Testing and Materials.

"AWS" means American Welding Society.

"BTU" means British thermal unit.

"BTUH" means British thermal unit per hour.

"CFM" means cubic feet per minute.

"CFR" means Code of Federal Register.

"CGA" means Compressed Gas Association.

"CIE" means Commission Internationale de l' Eclairage.

"DOT" means department of transportation.

"FRP" means fiberglass reinforced plastic.

"GPM" means gallons per minute.

"ICC" means Interstate Commerce Commission.

"ID" means inside diameter.

"LPG" means liquefied petroleum gas.

"MCA" means Manufacturing Chemist Association.

"MSHA" means United States Department of Labor, Mine Safety and Health Administration.

"NBFU" means National Board of Fire Underwriters.

"NEMA" means National Electrical Manufacturing Association.

"NFPA" means National Fire Protection Association.

"NTP" means normal temperature and pressure.

"OD" means outside diameter.

"PSI" means pounds per square inch.

"PSIA" means pounds per square inch absolute.

"PSIG" means pounds per square inch gauge.

"RMA" means Rubber Manufacturers Association.

"SAE" means Society of Automotive Engineers.

"TFI" means The Fertilizer Institute.

"TSC" means Trailer Standard Code.

"UL" means Underwriters' Laboratories, Inc.

"USASI" means United States of America Standards Institute.

"USC" means United States Code.

"USCG" means United States Coast Guard.

"WAC" means Washington Administrative Code.

"WISHA" means Washington Industrial Safety and Health Act of 1973.

[Statutory Authority: Chapter 49.17 RCW. 95-04-007, § 296-155-012, filed 1/18/95, effective 3/1/95. Statutory Authority: RCW 49.17.040 and 49.17.050. 86-03-074 (Order 86-14), § 296-155-012, filed 1/21/86; Order 74-26, § 296-155-012, filed 5/7/74, effective 6/6/74.]

WAC 296-155-015 Education and first-aid standards. It shall be the duty of every employer to comply with such standards and systems of education for safety as shall be, from time to time, prescribed for such employer by the director of labor and industries or by statute. Refer to WAC 296-155-100 through 296-155-135 for additional requirements.

[Statutory Authority: Chapter 49.17 RCW. 94-15-096 (Order 94-07), § 296-155-015, filed 7/20/94, effective 9/20/94; Order 74-26, § 296-155-015, filed 5/7/74, effective 6/6/74.]

WAC 296-155-020 Housekeeping. (1) All places of employment shall be kept clean to the extent that the nature of the work allows.

(2) To facilitate cleaning, every floor, working surface, and passageway shall be kept free from protruding nails, splinters, loose boards or openings.

(3) Cleaning and sweeping shall be performed in such a manner as to minimize the contamination of the air with dust.

(4) In areas where workers may pass or perform duties, all debris and accumulations of material shall be removed. Hoses and electrical conductors across aisles or passageways shall be covered or suspended overhead so that there is no tripping hazard.

(5) Where mechanical handling equipment is used, sufficient safe clearances shall be allowed for aisles, at loading docks, through doorways and wherever turns or passages must be made. Such aisles and passageways shall be marked.

(6) Storage of material shall not create a hazard. Bags, containers, bundles, construction materials and other equipment shall be stored in tiers, stacked, blocked or interlocked. They shall be limited in height so that they are stable and secure against falling, sliding, or collapse.

(7) Free access shall be maintained at all times to all exits, fire alarm boxes, fire extinguishing equipment, and any other emergency equipment. Free access means clear of all obstructions.

(8) Working and storage areas shall be kept free from accumulation of materials that pose hazards of tripping, fire, explosion, or pest harborage. Vegetation control shall be exercised.

(9) All lunchrooms, washrooms and restrooms shall be kept in a clean and sanitary condition. Garbage cans in lunchrooms and restrooms shall be equipped with fitted covers and the contents disposed of daily.

(10) During the course of construction, alteration, repair or demolition of buildings and structures, employers shall ensure continuous clean-up of their work area, including removal of all rubble, scrap, boxes, crates and excess material to trash disposal areas.

(11) Containers shall be provided for the collection and separation of waste, trash, oily or used rags, and other refuse. Containers used for garbage and other oily, flammable or hazardous wastes, such as caustics, acids, harmful dusts or similar materials shall be equipped with covers. Common garbage and other waste shall be disposed of at frequent and regular intervals. Chemical agents or substances which might react to create a hazardous condition shall be stored and disposed of separately. All hazardous wastes which are subject to the requirements of chapter 173-303 WAC shall be han-

dled, accumulated and disposed of in accordance with that chapter.

(12) All floors and walkways shall be maintained in good condition. Loose or broken components shall be repaired or replaced. Secure footing shall be ensured on all floors and walkways.

[Statutory Authority: RCW 49.17.040 and 49.17.050. 86-03-074 (Order 86-14), § 296-155-020, filed 1/21/86; Order 74-26, § 296-155-020, filed 5/7/74, effective 6/6/74.]

WAC 296-155-030 Acceptable certifications. (1) Pressure vessels. Current and valid certification by an insurance company or regulatory authority shall be deemed as acceptable evidence of safe installation, inspection, testing of pressure vessels provided by the employer.

(2) Boilers. Boilers provided by the employer shall be deemed to be in compliance with the requirements of this section when evidence of current and valid certification by an insurance company or regulatory authority attesting to the safe installation, inspection, and testing is presented.

(3) Other requirements. Regulations prescribing specific requirements for other types of pressure vessels and similar equipment are contained in Parts D and M of this chapter.

[Order 74-26, § 296-155-030, filed 5/7/74, effective 6/6/74.]

WAC 296-155-035 General requirements. (1) The use of any machinery, tool, material, or equipment which is not in compliance with any applicable requirements of this chapter is prohibited. Such machine, tool, material, or equipment shall either be identified as unsafe by tagging or locking the controls to render them inoperable or shall be physically removed from its place of operation.

(2) The employer shall permit only those employees qualified by training or experience to operate equipment and machinery.

(3) Employees shall use safeguards provided for their protection.

(4) Suitable clothing shall be worn for the job. Sufficient and proper clothing shall be worn to assist in preventing scratches, abrasions, slivers, sunburn, hot liquid burns, or similar hazards. Loose or ragged clothing, scarfs or ties shall not be worn while working around moving machinery.

(5) Where work is in progress above workers, a catch platform or other means shall be provided to protect those working below. All workers shall be notified. One completed floor shall be maintained between workers and steel or concrete work above.

(6) Employees shall report to their employers the existence of any unsafe equipment or method or any other hazard which, to their knowledge is unsafe and where such unsafe equipment or method or other hazard exists in violation of this chapter it shall be corrected.

(7) Nothing herein contained shall prevent the use of existing equipment during its lifetime provided it shall be properly safeguarded, maintained in good condition, be in conformity with applicable safety and health standards, and shall conform to safety factors for the material used, as herein provided.

(8) As construction progresses, the component parts of structures shall be secured or braced to prevent collapse or failure.

(9) Prompt and safe removal of injured employees from elevated work locations, trenches and excavations shall be ensured prior to commencement of work.

[Statutory Authority: RCW 49.17.040 and 49.17.050. 86-03-074 (Order 86-14), § 296-155-035, filed 1/21/86; Order 74-26, § 296-155-035, filed 5/7/74, effective 6/6/74.]

WAC 296-155-040 Safe place standards. (1) Each employer shall furnish to each employee a place of employment free from recognized hazards that are causing or likely to cause serious injury or death to employees.

(2) Every employer shall require safety devices, furnish safeguards, and shall adopt and use practices, methods, operations, and processes which are reasonably adequate to render such employment and place of employment safe. Every employer shall do everything reasonably necessary to protect the life and safety of employees.

(3) No employer shall require any employee to go or be in any employment or place of employment which is hazardous to the employee.

(4) No employer shall fail or neglect:

(a) To provide and use safety devices and safeguards.

(b) To adopt and use methods and processes reasonably adequate to render the employment and place of employment safe.

(c) To do everything reasonably necessary to protect the life and safety of employees.

(5) No employer, owner, or lessee of any real property shall construct or cause to be constructed any place of employment that is hazardous to the employee.

(6) No person shall do any of the following:

(a) Remove, displace, damage, destroy or carry off any safety device, safeguard, notice, or warning, furnished for use in any employment or place of employment.

(b) Interfere in any way with the use thereof by any other person.

(c) Interfere with the use of any method or process adopted for the protection of any employee, including themselves, in such employment, or place of employment.

(d) Fail or neglect to do everything reasonably necessary to protect the life and safety of employees.

(7) The use of intoxicants or debilitating drugs while on duty is prohibited. Employees under the influence of intoxicants or drugs shall not be permitted in or around worksites. This subsection (7) shall not apply to employees taking prescription drugs or narcotics as directed and prescribed by a physician, provided such use does not endanger the employee or others.

[Statutory Authority: Chapter 49.17 RCW. 94-15-096 (Order 94-07), § 296-155-040, filed 7/20/94, effective 9/20/94; Order 74-26, § 296-155-040, filed 5/7/74, effective 6/6/74.]

PART B-1
OCCUPATIONAL HEALTH AND ENVIRONMENTAL CONTROL

WAC 296-155-100 Management's responsibility. (1) It shall be the responsibility of management to establish, supervise, and enforce, in a manner which is effective in practice:

(a) A safe and healthful working environment.

(b) An accident prevention program as required by these standards.

(c) Training programs to improve the skill and competency of all employees in the field of occupational safety and health.

(2) Employees required to handle or use poisons, caustics, and other harmful substances shall be instructed regarding the safe handling and use, and be made aware of the potential hazards, personal hygiene, and personal protective measures required.

(3) In job site areas where harmful plants or animals are present, employees who may be exposed shall be instructed regarding the potential hazards, and how to avoid injury, and the first-aid procedures to be used in the event of injury.

(4) Employees required to handle or use flammable liquids, gases, or toxic materials shall be instructed in the safe handling and use of these materials and made aware of the specific requirements contained in Parts B, D, and other applicable parts of this standard.

(5) Permit-required confined spaces. The requirements of chapters 296-24, 296-62 and 296-155 WAC apply.

(6) The employer shall ensure that work assignments place no employee in a position or location not within ordinary calling distance of another employee able to render assistance in case of emergency.

Note: This subsection does not apply to operators of motor vehicles, watchpersons or other jobs which, by their nature, are single employee assignments. However, a definite procedure for checking the welfare of all employees during working hours should be instituted and all employees so advised.

(7) Each employer shall post and keep posted a notice or notices (Job Safety and Health Protection - Form F416-081-000) to be furnished by the department of labor and industries, informing employees of the protections and obligations provided for in the act and that for assistance and information, including copies of the act, and of specific safety and health standards employees should contact the employer or the nearest office of the department of labor and industries. Such notice or notices shall be posted by the employer at each establishment in a conspicuous place or places where notices to employees are customarily posted. Each employer shall take steps to assure that such notices are not altered, defaced, or covered by other material.

[Statutory Authority: Chapter 49.17 RCW. 95-04-007, § 296-155-100, filed 1/18/95, effective 3/1/95; 94-15-096 (Order 94-07), § 296-155-100, filed 7/20/94, effective 9/20/94; 91-24-017 (Order 91-07), § 296-155-100, filed 11/22/91, effective 12/24/91. Statutory Authority: RCW 49.17.040 and 49.17.050. 86-03-074 (Order 86-14), § 296-155-100, filed 1/21/86; Order 76-6, § 296-155-100, filed 3/1/76; Order 74-26, § 296-155-100, filed 5/7/74, effective 6/6/74.]

WAC 296-155-105 Employee's responsibility. (1) Employees shall coordinate and cooperate with all other employees in an attempt to eliminate accidents.

(2) Employees shall study and observe all safety standards governing their work.

(3) Employees shall apply the principles of accident prevention in their daily work and shall use proper safety devices and protective equipment as required by their employment or employer.

(4) Employees shall properly care for all personal protective equipment.

(5) Employees shall make a report, on the day of the incident, to their immediate supervisor, of each industrial injury or occupational illness, regardless of the degree of severity.

[Order 74-26, § 296-155-105, filed 5/7/74, effective 6/6/74.]

WAC 296-155-110 Accident prevention program. (1) Exemptions. Workers of employers whose primary business is other than construction, who are engaged solely in maintenance and repair work, including painting and decorating, are exempt from the requirement of this section provided:

(a) The maintenance and repair work, including painting and decorating, is being performed on the employer's premises, or facility.

(b) The length of the project does not exceed one week.

(c) The employer is in compliance with the requirements of WAC 296-800-140 Accident prevention program, and WAC 296-800-130, Safety committees and safety meetings.

(2) Each employer shall develop a formal accident-prevention program, tailored to the needs of the particular plant or operation and to the type of hazard involved. The department may be contacted for assistance in developing appropriate programs.

(3) The following are the minimal program elements for all employers:

A safety orientation program describing the employer's safety program and including:

(a) How, where, and when to report injuries, including instruction as to the location of first-aid facilities.

(b) How to report unsafe conditions and practices.

(c) The use and care of required personal protective equipment.

(d) The proper actions to take in event of emergencies including the routes of exiting from areas during emergencies.

(e) Identification of the hazardous gases, chemicals, or materials involved along with the instructions on the safe use and emergency action following accidental exposure.

(f) A description of the employer's total safety program.

(g) An on-the-job review of the practices necessary to perform the initial job assignments in a safe manner.

(4) Each accident-prevention program shall be outlined in written format.

(5) Every employer shall conduct crew leader-crew safety meetings as follows:

(a) Crew leader-crew safety meetings shall be held at the beginning of each job, and at least weekly thereafter.

(b) Crew leader-crew meetings shall be tailored to the particular operation.

(6) Crew leader-crew safety meetings shall address the following:

(a) A review of any walk-around safety inspection conducted since the last safety meeting.

(b) A review of any citation to assist in correction of hazards.

(c) An evaluation of any accident investigations conducted since the last meeting to determine if the cause of the unsafe acts or unsafe conditions involved were properly identified and corrected.

(d) Attendance shall be documented.

(e) Subjects discussed shall be documented.

Note: Subcontractors and their employees may, with the permission of the general contractor, elect to fulfill the requirements of subsection (5)(a) and (b) of this section by attending the prime contractors crew leader-crew safety meeting. Any of the requirements of subsections (6)(a), (b), (c), and (7) of this section not satisfied by the prime contractors safety meetings shall be the responsibility of the individual employers.

(7) Minutes of each crew leader-crew meeting shall be prepared and a copy shall be maintained at the location where the majority of the employees of each construction site report for work each day.

(8) Minutes of crew leader-crew safety meetings shall be retained by the employer for at least one year and shall be made available for review by personnel of the department, upon request.

(9) Every employer shall conduct walk-around safety inspections as follows:

(a) At the beginning of each job, and at least weekly thereafter, a walk-around safety inspection shall be conducted jointly by one member of management and one employee, elected by the employees, as their authorized representative.

(b) The employer shall document walk-around safety inspections and such documentation shall be available for inspection by personnel of the department.

(c) Records of walk-around inspections shall be maintained by the employer until the completion of the job.

[Statutory Authority: RCW 49.17.010, [49.17].040, and [49.17].050. 01-11-038, § 296-155-110, filed 5/9/01, effective 9/1/01; 00-08-078, § 296-155-110, filed 4/4/00, effective 7/1/00. Statutory Authority: Chapter 49.17 RCW. 94-15-096 (Order 94-07), § 296-155-110, filed 7/20/94, effective 9/20/94; 92-09-148 (Order 92-01), § 296-155-110, filed 4/22/92, effective 5/25/92. Statutory Authority: RCW 49.17.040 and 49.17.050. 86-03-074 (Order 86-14), § 296-155-110, filed 1/21/86; Order 74-26, § 296-155-110, filed 5/7/74, effective 6/6/74.]

WAC 296-155-115 Safety bulletin board. There shall be installed and maintained in every fixed establishment (the place where employees regularly report to work) employing eight or more persons, a safety bulletin board sufficient in size to display and post safety bulletins, newsletters, posters, accident statistics and other safety educational material.

[Order 74-26, § 296-155-115, filed 5/7/74, effective 6/6/74.]

WAC 296-155-120 First-aid training and certification. This section is designed to assure that all employees in this state are afforded quick and effective first-aid attention in the event of an on the job injury. To achieve this purpose the presence of personnel trained in first-aid procedures at or near those places where employees are working is required. Compliance with the provisions of this section may require the presence of more than one first-aid trained person.

(1) Each employer must have available at all worksites, where a crew is present, a person or persons holding a valid first-aid certificate.

(2) All crew leaders, supervisors or persons in direct charge of one or more employees must have a valid first-aid certificate.

(3) For the purposes of this section, a crew means a group of two or more employees working at any worksite.

Note: The requirement that all crew leaders, supervisors or person in direct charge of one or more employees (subsection (3) of this section) applies even if other first-aid trained person(s) are available. In emergencies, crew leaders will be permitted to work up to thirty days without having the required certificate, providing an employee in the crew or another crew leaders in the immediate work area has the necessary certificate.

[Statutory Authority: RCW 49.17.010, 49.17.040, 49.17.050, and 49.17.060. 04-07-160, § 296-155-120, filed 3/23/04, effective 5/1/04. Statutory Authority: RCW 49.17.010, [49.17].040, and [49.17].050. 01-11-038, § 296-155-120, filed 5/9/01, effective 9/1/01; 00-01-038, § 296-155-120, filed 12/7/99, effective 2/1/00. Statutory Authority: Chapter 49.17 RCW. 94-15-096 (Order 94-07), § 296-155-120, filed 7/20/94, effective 9/20/94. Statutory Authority: RCW 49.17.040 and 49.17.050. 86-03-074 (Order 86-14), § 296-155-120, filed 1/21/86; Order 74-26, § 296-155-120, filed 5/7/74, effective 6/6/74.]

WAC 296-155-125 First-aid supplies. (1) The first-aid kits and supplies requirements of the safety and health core rules, chapter 296-800 WAC, apply within the scope of chapter 296-155 WAC.

(2) All vehicles used to transport work crews must be equipped with first-aid supplies.

(3) When practical, a poster must be fastened and maintained either on or in the cover of each first-aid kit and at or near all phones plainly stating the worksite address or location, and the phone numbers of emergency medical responders for the worksite.

(4) Requirements of WAC 296-62-130, Emergency washing facilities, apply within the scope of chapter 296-155 WAC.

[Statutory Authority: RCW 49.17.010, [49.17].040, and [49.17].050. 01-11-038, § 296-155-125, filed 5/9/01, effective 9/1/01;00-01-038, § 296-155-125, filed 12/7/99, effective 2/1/00. Statutory Authority: Chapter 49.17 RCW. 94-15-096 (Order 94-07), § 296-155-125, filed 7/20/94, effective 9/20/94. Statutory Authority: RCW 49.17.040 and 49.17.050. 86-03-074 (Order 86-14), § 296-155-125, filed 1/21/86; Order 74-26, § 296-155-125, filed 5/7/74, effective 6/6/74.]

WAC 296-155-130 First-aid station. Employers with fifty or more employees per shift at one location must establish a first-aid station in accordance with the requirements in chapter 296-800 WAC.

[Statutory Authority: RCW 49.17.010, [49.17].040, and [49.17].050. 01-11-038, § 296-155-130, filed 5/9/01, effective 9/1/01; 00-01-038, § 296-155-130, filed 12/7/99, effective 2/1/00. Statutory Authority: RCW 49.17.040 and 49.17.050. 86-03-074 (Order 86-14), § 296-155-130, filed 1/21/86; Order 74-26, § 296-155-130, filed 5/7/74, effective 6/6/74.]

WAC 296-155-140 Sanitation. (1) Potable water.

(a) An adequate supply of potable water shall be provided in all places of employment.

(b) Portable containers used to dispense drinking water shall be capable of being tightly closed and equipped with a tap. Water shall not be dipped from containers.

(c) Any container used to distribute drinking water shall be clearly marked as to the nature of its contents and not used for any other purpose.

(d) The common drinking cup is prohibited.

(e) Where single service cups (to be used but once) are supplied, both a sanitary container for the unused cups and a receptacle for disposing of the used cups shall be provided.

(f) All water containers used to furnish drinking water shall be thoroughly cleaned at least once each week or more often as conditions require.

(g) The requirements of this subsection do not apply to mobile crews or to normally unattended work locations as long as employees working at these locations have transportation immediately available, within the normal course of their duties, to nearby facilities otherwise meeting the requirements of this section.

(h) The following definitions apply:

(i) Mobile crew: A work crew that routinely moves to a different work location periodically. Normally a mobile crew is not at the same location all day.

(ii) Normally unattended work location: An unattended site that is visited occasionally by one or more employees.

(iii) Nearby facility: A sanitary facility that is within three minutes travel by the transportation provided.

(iv) "Potable water" means water which meets the quality standards for drinking purposes of state or local authority having jurisdiction or water that meets the quality standards prescribed by the United States Environmental Protection Agency's National Interim Primary Drinking Water Regulations, published in 40 CFR Part 141, and 40 CFR 147.2400.

(2) Wash water.

(a) Clean, tepid wash water, between 70 and 100 degrees Fahrenheit, shall be provided at all construction sites.

(b) Individual hand towels shall be provided. Both a sanitary container for the unused towels and a receptacle for disposal of used towels shall be provided.

(c) Hand soap, industrial hand cleaner or similar cleansing agents shall be provided. Cleansing agents shall be adequate to remove any paints, coatings, herbicides, insecticides or other contaminants.

(d) The requirements of this subsection do not apply to mobile crews or to normally unattended work locations as long as employees working at these locations have transportation immediately available, within the normal course of their duties, to nearby facilities otherwise meeting the requirements of this section.

(e) Gasoline or solvents shall not be used for personal cleaning.

(f) Wash water areas will be maintained in a dry condition. Slipping or other hazards shall be eliminated from the wash water area before it is acceptable for use.

(3) Nonpotable water.

(a) Outlets for nonpotable water, such as water for industrial or fire fighting purposes only, shall be identified by signs meeting the requirements of Part E of this chapter, to indicate clearly that the water is unsafe and is not to be used for drinking, washing or cooking purposes.

(b) There shall be no cross-connection, open or potential, between a system furnishing potable water, a system furnishing nonpotable water or a system furnishing wash water.

(4) Toilets.

(a) The provisions of this section apply to both portable chemical toilets and to flush toilets, except where flush toilets are used the requirements of WAC 296-800-230 shall apply instead of (b) of this subsection.

(b) Accessible toilets shall be provided for employees according to the following table:

TABLE B-1

Number of Employees	Toilets Required
1 - 10	1
11 - 25	2
26 - 40	3
41 - 60	4
61 - 80	5
Over 80	one additional toilet for each additional twenty employees or any fraction thereof.

(c) When the employer provides both flush and portable chemical toilets, the number of employees allowed to be served by the flush toilets, per WAC 296-800-230 will be calculated. That number will be subtracted from the total number of employees and the employer will be required to provide an adequate number of portable chemical toilets for the number of remaining employees, as required by (b) of this subsection.

(d) Toilets shall be maintained in clean, sanitary and functional condition. Internal latches shall be provided to secure the units from inadvertent entry. Where there are twenty or more employees consisting of both sexes, facilities shall be provided for each sex.

(i) Each unit shall be properly cleaned on a routine basis.

(ii) Chemicals, toilet tissue and sanitary seat covers shall be maintained in a supply sufficient for use during the entire shift.

(iii) Any defective or inadequate unit shall be immediately removed from service.

(e) Specifications. The following specifications apply:

(i) A noncaustic chemical toilet (portable chemical toilet is) a self-contained unit equipped with a waste receiving chemical holding container.

(ii) Portable chemical toilets consisting of only a holding tank, commonly referred to as "elevator units" or "elevator toilets" are not acceptable. "Elevator units" may be used if they are individually located in a lockable room which affords privacy. When this type unit is used in a private individual lockable room the entire room will be considered a toilet facility, as such the room will meet all requirements of toilet facilities and be inspected in accordance with subsection (5)(b)(iii) of this section.

(iii) Rooms, buildings or shelters housing toilets shall be of sound construction, easy to clean, provide shelter and provide privacy. The toilet rooms shall be ventilated to the outside and adequately lighted. All openings into the toilet room shall be covered with 16-mesh screen.

(iv) Toilets shall be serviced on a regular schedule. Servicing shall include the use of a disinfectant for cleaning urinals and seats, removing waste from containers, recharging containers with an odor controlling chemical and installing an adequate supply of toilet tissue and seat covers.

(v) Service shall be performed in accordance with local codes by approved servicing organizations. Waste shall be disposed of or discharged in accordance with requirements of local health department regulations.

(vi) Waste containers shall be fabricated from impervious materials, e.g. plastic, steel, fiberglass or their equivalent.

Containers shall be water tight and capable of containing the chemical waste in a sanitary manner. The container shall be fitted to the building in a manner so as to prevent insects from entering from the exterior of the building. Containers shall be adequate in size to be used by the number of persons, according to the schedule for minimum requirements, without filling the container to more than half of its volume before regularly scheduled servicing.

(vii) Removal of waste shall be handled in a clean and sanitary manner by means of a vacuum hose and received by a leak-proof tank truck. All valves on the tank shall be leak-proof.

(viii) Provisions shall be made so service trucks have a clear approach and convenient access to the toilets to be serviced.

(ix) Disposal of waste from tank trucks shall be in accordance with local health department requirements. In the absence of provisions by local health departments, waste must be disposed of through municipal or district sanitary sewage systems. Municipal or area sanitary sewage districts shall provide sewage disposal locations and facilities which are adequate and convenient for duly authorized toilet service organizations.

(f) The requirements of this subsection do not apply to mobile crews or to normally unattended work locations as long as employees working at these locations have transportation immediately available, within the normal course of their duties, to nearby facilities otherwise meeting the requirements of this section.

(5)(a) On multiemployer worksites, the prime contractor shall ensure that the requirements of this section are met. Each employer is responsible for seeing that facilities for their own employees are provided.

(b) Each employer shall ensure, at the beginning of each shift, that the sanitation facilities required by this section are inspected. If any facility or unit fails to meet the following requirements, immediate corrective action shall be taken. Such action shall be documented and maintained at the site for at least 72 hours. Inspection shall establish:

(i) Potable water: Sufficient supply of water, sufficient supply of cups, container integrity, cleanliness of unit and area, capacity of trash receptacle (empty).

(ii) Wash water: Sufficient supply of clean water, proper temperature, sufficient supply of towels, sufficient supply of cleansing agents, container integrity, cleanliness of unit and area without the presence of physical hazards, capacity of trash receptacle (empty).

(iii) Toilets: Sufficient supply of toilet tissue and sanitary seat covers, capacity and condition of chemical agent, capacity and condition of holding tank, cleanliness of unit and area without the presence of physical hazards, physical and structural condition of unit, condition of lock, condition of toilet seat and tissue holder, absence of all foreign debris.

(c) The location of the facilities required by subsections (1), (2) and (4) of this section shall be as close as practical to the highest concentration of employees.

(i) On multistory structures they shall be furnished on every third floor.

(ii) At all sites they shall be located within 200 feet horizontally of all employees.

(iii) The requirements of subsection (5)(c)(i) and (ii) do not apply to mobile crews or to normally unattended work locations as long as employees working at these locations have transportation immediately available, within the normal course of their duties, to nearby facilities otherwise meeting the requirements of this section.

(6) Food handling. All employees' food service facilities and operations shall meet the applicable laws, ordinances and regulations of the jurisdictions in which they are located.

(7) Temporary sleeping quarters. When temporary sleeping quarters are provided, they shall be heated, ventilated and lighted.

[Statutory Authority: RCW 49.17.010, [49.17].040, and [49.17].050. 01-11-038, § 296-155-140, filed 5/9/01, effective 9/1/01. Statutory Authority: Chapter 49.17 RCW. 94-15-096 (Order 94-07), § 296-155-140, filed 7/20/94, effective 9/20/94; 89-11-035 (Order 89-03), § 296-155-140, filed 5/15/89, effective 6/30/89. Statutory Authority: RCW 49.17.040 and 49.17.050. 86-03-074 (Order 86-14), § 296-155-140, filed 1/21/86; Order 74-26, § 296-155-140, filed 5/7/74, effective 6/6/74.]

WAC 296-155-145 Occupational noise exposure. The occupational noise exposure requirements of chapter 296-817 WAC, Hearing loss prevention (noise), apply.

[Statutory Authority: RCW 49.17.010, 49.17.040, 49.17.050, and 49.17.060. 03-11-060, § 296-155-145, filed 5/19/03, effective 8/1/03. Statutory Authority: RCW 49.17.040 and 49.17.050. 85-01-022 (Order 84-24), § 296-155-145, filed 12/11/84; 83-15-017 (Order 83-19), § 296-155-145, filed 7/13/83, effective 9/12/83; Order 76-29, § 296-155-145, filed 9/30/76; Order 74-26, § 296-155-145, filed 5/7/74, effective 6/6/74.]

WAC 296-155-150 Ionizing radiation. (1) In construction and related activities involving the use of sources of ionizing radiation, the pertinent provisions of the Nuclear Regulatory Commission's Standards for Protection Against Radiation, relating to protection against occupational radiation exposure, shall apply.

(2) Any activity which involves the use of radioactive material or X ray, whether or not under license from the Nuclear Regulatory Commission, shall be performed by competent persons specially trained in the proper and safe operation of such equipment. In the case of materials used under commission license, only persons actually licensed, or competent persons under direction and supervision of the licensee shall perform such work.

[Statutory Authority: Chapter 49.17 RCW. 94-15-096 (Order 94-07), § 296-155-150, filed 7/20/94, effective 9/20/94; Order 74-26, § 296-155-150, filed 5/7/74, effective 6/6/74.]

WAC 296-155-155 Nonionizing radiation. (1) Only qualified and trained employees shall be assigned to install, adjust, and operate laser equipment.

(2) Proof of qualification of the laser equipment operator shall be available and in possession of operator at all times.

(3) Employees, when working in areas in which a potentially hazardous exposure (see WAC 296-62-09005(4)) to direct or reflected laser radiation exists, shall be provided with antilaser eye protection devices specified in Part C of this chapter.

(4) Areas in which Class II and III lasers are used shall be posted with standard laser warning placards.

(5) Beam shutters or caps shall be utilized, or the laser turned off, when laser transmission is not actually required.

When the laser is left unattended for a substantial period of time, such as during lunch hour, overnight, or at change of shifts, the laser shall be turned off.

(6) Only mechanical or electronic means shall be used as a detector for guiding the internal alignment of the laser.

(7) The laser beam shall not be directed at employees.

(8) When it is raining or snowing, or when there is dust or fog in the air, and it is impracticable to cease laser system operation, employees shall be kept out of range of the area of source and target during such weather conditions.

(9) Laser equipment shall bear a conspicuously displayed label to indicate hazard classification. This label shall be prepared in accordance with 21 CFR 1040.10.

(10) Only Class I, II, or III laser equipment shall be used. Class IV laser equipment shall not be used.

(11) Laser unit in operation shall be set up above the heads of the employees, when possible.

(12) Employees shall not be exposed to radiofrequency/microwave radiation in excess of the permissible exposure limits specified in WAC 296-62-09005.

[Statutory Authority: RCW 49.17.040 and 49.17.050. 86-03-074 (Order 86-14), § 296-155-155, filed 1/21/86; 85-01-022 (Order 84-24), § 296-155-155, filed 12/11/84; Order 74-26, § 296-155-155, filed 5/7/74, effective 6/6/74.]

WAC 296-155-160 Gases, vapors, fumes, dusts, and mists. (1) Exposure of employees to inhalation, ingestion, skin absorption, or contact with any material or substance at a concentration above those specified in the general occupational health standards, WAC 296-62-07515 shall be avoided.

(2) To achieve compliance with subsection (1) of this section, administrative or engineering controls must first be implemented whenever feasible. When such controls are not feasible to achieve full compliance, protective equipment or other protective measures shall be used to keep the exposure of employees to air contaminants within the limits prescribed in WAC 296-62-07515. Any equipment and technical measures used for this purpose must first be approved for each particular use by a competent industrial hygienist or other technically qualified person. Whenever respirators are used, their use shall comply with WAC 296-155-220.

(3) Whenever internal combustion equipment exhausts in enclosed spaces, tests shall be made and recorded to ensure that employees are not exposed to unsafe concentrations of toxic gases or oxygen deficient atmospheres. See chapter 296-62 WAC, the general occupational health standards.

(4) Whenever any employee is exposed to asbestos, the provisions of the general occupational health standards, chapter 296-62 WAC shall apply.

(5) Subsections (1) and (2) of this section do not apply to the exposure of employees to formaldehyde. Whenever any employee is exposed to formaldehyde, the requirements of WAC 296-62-07540 shall apply.

[Statutory Authority: Chapter 49.17 RCW. 94-15-096 (Order 94-07), § 296-155-160, filed 7/20/94, effective 9/20/94; 88-14-108 (Order 88-11), § 296-155-160, filed 7/6/88; 87-24-051 (Order 87-24), § 296-155-160, filed 11/30/87. Statutory Authority: RCW 49.17.050(2) and 49.17.040. 87-10-008 (Order 87-06), § 296-155-160, filed 4/27/87. Statutory Authority: RCW 49.17.040 and 49.17.050. 86-03-074 (Order 86-14), § 296-155-160, filed 1/21/86. Statutory Authority: RCW 49.17.040 and 49.17.050. 83-24-013 (Order 83-34), § 296-155-160, filed 11/30/83; Order 74-26, § 296-155-160, filed 5/7/74, effective 6/6/74.]

WAC 296-155-165 Lighting and illumination. For lighting and illumination requirements, see WAC 296-800-210, Lighting.

[Statutory Authority: RCW 49.17.010, 49.17.040, 49.17.050, 49.17.060. 04-24-089, § 296-155-165, filed 12/1/04, effective 1/1/05. Statutory Authority: RCW 49.17.040 and 49.17.050. 86-03-074 (Order 86-14), § 296-155-165, filed 1/21/86; Order 74-26, § 296-155-165, filed 5/7/74, effective 6/6/74.]

WAC 296-155-170 Ventilation. (1) General. Whenever hazardous substances such as dusts, fumes, mists, vapors, or gases exist or are produced in the course of construction work, their concentrations shall not exceed the limits specified in WAC 296-155-160(1). When ventilation is used as an engineering control method, the system shall be installed and operated according to the requirements of this section.

(2) Local exhaust ventilation. Local exhaust ventilation when used as described in (1) shall be designed to prevent dispersion into the air of dusts, fumes, mists, vapors, and gases in concentrations causing harmful exposure. Such exhaust systems shall be so designed that dusts, fumes, mists, vapors, or gases are not drawn through the work area of employees.

(3) Design and operation. Exhaust fans, jets, ducts, hoods, separators, and all necessary appurtenances, including refuse receptacles, shall be so designed, constructed, maintained and operated as to ensure the required protection by maintaining a volume and velocity of exhaust air sufficient to gather dusts, fumes, vapors, or gases from said equipment or process, and to convey them to suitable points of safe disposal, thereby preventing their dispersion in harmful quantities into the atmosphere where employees work.

(4) Duration of operations.

(a) The exhaust system shall be in operation continually during all operations which it is designed to serve. If the employee remains in the contaminated zone, the system shall continue to operate after the cessation of said operations, the length of time to depend upon the individual circumstances and effectiveness of the general ventilation system.

(b) Since dust capable of causing disability is, according to the best medical opinion, of microscopic size, tending to remain for hours in suspension in still air, it is essential that the exhaust system be continued in operation for a time after the work process or equipment served by the same shall have ceased, in order to ensure the removal of the harmful elements to the required extent.

Note: For the same reason, employees wearing respiratory equipment should not remove same immediately until a clear atmosphere has been established.

(5) Disposal of exhaust materials. The air outlet from every dust separator, and the dusts, fumes, mists, vapors, or gases collected by an exhaust or ventilating system shall discharge to the outside atmosphere. Collecting systems which return air to work area may be used if concentrations which accumulate in the work area air do not result in harmful exposure to employees. Dust and refuse discharged from an exhaust system shall be disposed of in such a manner that it will not result in harmful exposure to employees.

[Order 74-26, § 296-155-170, filed 5/7/74, effective 6/6/74.]

WAC 296-155-173 Methylenedianiline.

[Statutory Authority: Chapter 49.17 RCW. 93-04-111 (Order 92-15), § 296-155-173, filed 2/3/93, effective 3/15/93.]

WAC 296-155-17301 Scope and application. (1) This section applies to all construction work as defined in WAC 296-155-005, in which there is exposure to MDA, including but not limited to the following:

(a) Construction, alteration, repair, maintenance, or renovation of structures, substrates, or portions thereof, that contain MDA;

(b) Installation or the finishing of surfaces with products containing MDA;

(c) MDA spill/emergency cleanup at construction sites; and

(d) Transportation, disposal, storage, or containment of MDA or products containing MDA on the site or location at which construction activities are performed.

(2) Except as provided in subsection (7) of this section and WAC 296-155-17311(5), this standard does not apply to the processing, use, and handling of products containing MDA where initial monitoring indicates that the product is not capable of releasing MDA in excess of the action level under the expected conditions of processing, use, and handling which will cause the greatest possible release; and where no "dermal exposure to MDA" can occur.

(3) Except as provided in subsection (7) of this section, this standard does not apply to the processing, use, and handling of products containing MDA where objective data are reasonably relied upon which demonstrate the product is not capable of releasing MDA under the expected conditions of processing, use, and handling which will cause the greatest possible release; and where no "dermal exposure to MDA" can occur.

(4) Except as provided in subsection (7) of this section, this standard does not apply to the storage, transportation, distribution, or sale of MDA in intact containers sealed in such a manner as to contain the MDA dusts, vapors, or liquids, except for the provisions of WAC 296-62-054 and 296-155-17309.

(5) Except as provided in subsection (7) of this section, this standard does not apply to materials in any form which contain less than 0.1% MDA by weight or volume.

(6) Except as provided in subsection (7) of this section, this standard does not apply to "finished articles containing MDA."

(7) Where products containing MDA are exempted under subsections (2) and (6) of this section, the employer shall maintain records of the initial monitoring results or objective data supporting that exemption and the basis for the employer's reliance on the data, as provided in the recordkeeping provision of WAC 296-155-17331.

[Statutory Authority: Chapter 49.17 RCW. 93-04-111 (Order 92-15), § 296-155-17301, filed 2/3/93, effective 3/15/93.]

WAC 296-155-17303 Definitions. For the purpose of this standard, the following definitions shall apply:

(1) "Action level" means a concentration of airborne MDA of 5 ppb as an 8-hour time-weighted average.

(2) "Authorized person" means any person specifically authorized by the employer whose duties require the person to enter a regulated area, or any person entering such an area as a designated representative of employees for the purpose of exercising the right to observe monitoring and measuring procedures under WAC 296-155-17333, or any other person authorized by the act or regulations issued under the act.

(3) "Container" means any barrel, bottle, can, cylinder, drum, reaction vessel, storage tank, commercial packaging, or the like, but does not include piping systems.

(4) "Decontamination area" means an area outside of, but as near as practical to, the regulated area, consisting of an equipment storage area, wash area, and clean change area, which is used for the decontamination of workers, materials, and equipment contaminated with MDA.

(5) "Dermal exposure to MDA" occurs where employees are engaged in the handling, application, or use of mixtures or materials containing MDA, with any of the following nonairborne forms of MDA:

(a) Liquid, powdered, granular, or flaked mixtures containing MDA in concentrations greater than 0.1% by weight or volume; and

(b) Materials other than "finished articles" containing MDA in concentrations greater than 0.1% by weight or volume.

(6) "Director" means the director of the department of labor and industries.

(7) "Emergency" means any occurrence such as, but not limited to, equipment failure, rupture of containers, or failure of control equipment which results in an unexpected and potentially hazardous release of MDA.

(8) "Employee exposure" means exposure to MDA which would occur if the employee were not using respirators or protective work clothing and equipment.

(9) "Finished article containing MDA" is defined as a manufactured item:

(a) Which is formed to a specific shape or design during manufacture;

(b) Which has end use function(s) dependent in whole or part upon its shape or design during end use; and

(c) Where applicable, is an item which is fully cured by virtue of having been subjected to the conditions (temperature, time) necessary to complete the desired chemical reaction.

(10) "Historical monitoring data" means monitoring data for construction jobs that meet the following conditions:

(a) The data upon which judgments are based are scientifically sound and were collected using methods that are sufficiently accurate and precise;

(b) The processes and work practices that were in use when the historical monitoring data were obtained are essentially the same as those to be used during the job for which initial monitoring will not be performed;

(c) The characteristics of the MDA-containing material being handled when the historical monitoring data were obtained are the same as those on the job for which initial monitoring will not be performed;

(d) Environmental conditions prevailing when the historical monitoring data were obtained are the same as those on the job for which initial monitoring will not be performed; and

(e) Other data relevant to the operations, materials, processing, or employee exposures covered by the exception are

substantially similar. The data must be scientifically sound, the characteristics of the MDA containing material must be similar, and the environmental conditions comparable.

(11) "4,4' methylenedianiline" or "MDA" means the chemical 4,4'-diaminodiphenylmethane, Chemical Abstract Service Registry Number 101-77-9, in the form of a vapor, liquid, or solid. The definition also includes the salts of MDA.

(12) "Regulated areas" means areas where airborne concentrations of MDA exceed or can reasonably be expected to exceed, the permissible exposure limits, or where "dermal exposure to MDA" can occur.

(13) "STEL" means short-term exposure limit as determined by any 15-minute sample period.

[Statutory Authority: Chapter 49.17 RCW. 93-04-111 (Order 92-15), § 296-155-17303, filed 2/3/93, effective 3/15/93.]

WAC 296-155-17305 Permissible exposure limits. The employer shall assure that no employee is exposed to an airborne concentration of MDA in excess of ten parts per billion (10 ppb) as an 8-hour time-weighted average and a STEL of one hundred parts per billion (100 ppb).

[Statutory Authority: Chapter 49.17 RCW. 93-04-111 (Order 92-15), § 296-155-17305, filed 2/3/93, effective 3/15/93.]

WAC 296-155-17307 Communication among employers. On multiemployer worksites, an employer performing work involving the application of MDA or materials containing MDA for which establishment of one or more regulated areas is required shall inform other employers on the site of the nature of the employer's work with MDA and of the existence of, and requirements pertaining to, regulated areas.

[Statutory Authority: Chapter 49.17 RCW. 93-04-111 (Order 92-15), § 296-155-17307, filed 2/3/93, effective 3/15/93.]

WAC 296-155-17309 Emergency situations. (1) Written plan.

(a) A written plan for emergency situations shall be developed for each construction operation where there is a possibility of an emergency. The plan shall include procedures where the employer identifies emergency escape routes for her or his employees at each construction site before the construction operation begins. Appropriate portions of the plan shall be implemented in the event of an emergency.

(b) The plan shall specifically provide that employees engaged in correcting emergency conditions shall be equipped with the appropriate personal protective equipment and clothing as required in WAC 296-155-17317 and 296-155-17319 until the emergency is abated.

(c) The plan shall specifically include provisions for alerting and evacuating affected employees as well as the applicable elements prescribed in WAC 296-24-567, "Employee emergency plans and fire prevention plans."

(2) Alerting employees. Where there is the possibility of employee exposure to MDA due to an emergency, means shall be developed to promptly alert employees who have the potential to be directly exposed. Affected employees not engaged in correcting emergency conditions shall be evacuated immediately in the event that an emergency occurs. Means shall also be developed for alerting other employees who may be exposed as a result of the emergency.

[Statutory Authority: Chapter 49.17 RCW. 93-04-111 (Order 92-15), § 296-155-17309, filed 2/3/93, effective 3/15/93.]

WAC 296-155-17311 Exposure monitoring. (1) General.

(a) Determinations of employee exposure shall be made from breathing zone air samples that are representative of each employee's exposure to airborne MDA over an 8-hour period. Determination of employee exposure to the STEL shall be made from breathing zone air samples collected over a 15 minute sampling period.

(b) Representative employee exposure shall be determined on the basis of one or more samples representing full shift exposure for each shift for each job classification in each work area where exposure to MDA may occur.

(c) Where the employer can document that exposure levels are equivalent for similar operations in different work shifts, the employer shall only be required to determine representative employee exposure for that operation during one shift.

(2) Initial monitoring. Each employer who has a workplace or work operation covered by this standard shall perform initial monitoring to determine accurately the airborne concentrations of MDA to which employees may be exposed unless:

(a) The employer can demonstrate, on the basis of objective data, that the MDA-containing product or material being handled cannot cause exposures above the standard's action level, even under worst-case release conditions; or

(b) The employer has historical monitoring or other data demonstrating that exposures on a particular job will be below the action level.

(3) Periodic monitoring and monitoring frequency.

(a) If the monitoring required by subsection (2)(b) of this section reveals employee exposure at or above the action level, but at or below the PELs, the employer shall repeat such monitoring for each such employee at least every 6 months.

(b) If the monitoring required by subsection (2)(b) of this section reveals employee exposure above the PELs, the employer shall repeat such monitoring for each such employee at least every 3 months.

(c) Employers who are conducting MDA operations within a regulated area can forego periodic monitoring if the employees are all wearing supplied-air respirators while working in the regulated area.

(d) The employer may alter the monitoring schedule from every three months to every six months for any employee for whom two consecutive measurements taken at least 7 days apart indicate that the employee exposure has decreased to below the PELs but above the action level.

(4) Termination of monitoring.

(a) If the initial monitoring required by subsection (2)(b) of this section reveals employee exposure to be below the action level, the employer may discontinue the monitoring for that employee, except as otherwise required by subsection (5) of this section.

(b) If the periodic monitoring required by subsection (3) of this section reveals that employee exposures, as indicated

by at least two consecutive measurements taken at least 7 days apart, are below the action level the employer may discontinue the monitoring for that employee, except as otherwise required by subsection (5) of this section.

(5) Additional monitoring. The employer shall institute the exposure monitoring required under subsections (2)(b) and (c) of this section when there has been a change in production process, chemicals present, control equipment, personnel, or work practices which may result in new or additional exposures to MDA, or when the employer has any reason to suspect a change which may result in new or additional exposures.

(6) Accuracy of monitoring. Monitoring shall be accurate, to a confidence level of 95 percent, to within plus or minus 25 percent for airborne concentrations of MDA.

(7) Employee notification of monitoring results.

(a) The employer shall, within 15 working days after the receipt of the results of any monitoring performed under this standard, notify each employee of these results, in writing, either individually or by posting of results in an appropriate location that is accessible to affected employees.

(b) The written notification required by subdivision (a) of this subsection shall contain the corrective action being taken by the employer or any other protective measures which have been implemented to reduce the employee exposure to or below the PELs, wherever the PELs are exceeded.

(8) Visual monitoring. The employer shall make routine inspections of employee hands, face, and forearms potentially exposed to MDA. Other potential dermal exposures reported by the employee must be referred to the appropriate medical personnel for observation. If the employer determines that the employee has been exposed to MDA the employer shall:

(a) Determine the source of exposure;

(b) Implement protective measures to correct the hazard; and

(c) Maintain records of the corrective actions in accordance with WAC 296-155-17327.

[Statutory Authority: Chapter 49.17 RCW. 93-04-111 (Order 92-15), § 296-155-17311, filed 2/3/93, effective 3/15/93.]

WAC 296-155-17313 Regulated areas. (1) Establishment.

(a) Airborne exposures. The employer shall establish regulated areas where airborne concentrations of MDA exceed, or can reasonably be expected to exceed, the permissible exposure limits.

(b) Dermal exposures. Where employees are subject to "dermal exposure to MDA" the employer shall establish those work areas as regulated areas.

(2) Demarcation. Regulated areas shall be demarcated from the rest of the workplace in a manner that minimizes the number of persons potentially exposed.

(3) Access. Access to regulated areas shall be limited to authorized persons.

(4) Personal protective equipment and clothing. Each person entering a regulated area shall be supplied with, and required to use, the appropriate personal protective clothing and equipment in accordance with WAC 296-155-17317 and 296-155-17319.

(5) Prohibited activities. The employer shall ensure that employees do not eat, drink, smoke, chew tobacco or gum, or apply cosmetics in regulated areas.

[Statutory Authority: Chapter 49.17 RCW. 93-04-111 (Order 92-15), § 296-155-17313, filed 2/3/93, effective 3/15/93.]

WAC 296-155-17315 Methods of compliance. (1) Engineering controls and work practices and respirators.

(a) The employer shall use one or any combination of the following control methods to achieve compliance with the permissible exposure limits prescribed by WAC 296-155-17317.

(i) Local exhaust ventilation equipped with HEPA filter dust collection systems;

(ii) General ventilation systems;

(iii) Use of work practices; or

(iv) Other engineering controls such as isolation and enclosure that the director can show to be feasible.

(b) Wherever the feasible engineering controls and work practices which can be instituted are not sufficient to reduce employee exposure to or below the PELs, the employer shall use them to reduce employee exposure to the lowest levels achievable by these controls and shall supplement them by the use of respiratory protective devices which comply with the requirements of WAC 296-155-17317.

(2) Special provisions. For workers engaged in spray application methods, respiratory protection must be used in addition to feasible engineering controls and work practices to reduce employee exposure to or below the PELs.

(3) Prohibitions. Compressed air shall not be used to remove MDA unless the compressed air is used in conjunction with an enclosed ventilation system designed to capture the dust cloud created by the compressed air.

(4) Employee rotation. The employer shall not use employee rotation as a means of compliance with the exposure limits prescribed in WAC 296-155-17305.

(5) Compliance program.

(a) The employer shall establish and implement a written program to reduce employee exposure to or below the PELs by means of engineering and work practice controls, as required by subsection (1) of this section, and by use of respiratory protection where permitted under this section.

(b) Upon request this written program shall be furnished for examination and copying to the director, affected employees, and designated employee representatives. The employer shall review and, as necessary, update such plans at least once every 12 months to make certain they reflect the current status of the program.

[Statutory Authority: Chapter 49.17 RCW. 93-04-111 (Order 92-15), § 296-155-17315, filed 2/3/93, effective 3/15/93.]

WAC 296-155-17317 Respiratory protection. (1) General. For employees who use respirators required by this section, the employer must provide respirators that comply with the requirements of this section. Respirators must be used during:

(a) Periods necessary to install or implement feasible engineering and work-practice controls.

(b) Work operations, such as maintenance and repair activities and spray application processes, for which engineering and work-practice controls are not feasible.

(c) Work operations for which feasible engineering and work-practice controls are not yet sufficient to reduce employee exposure to or below the PELs.

(d) Emergencies.

(2) Respirator program. The employer must implement a respiratory protection program as required by chapter 296-62 WAC, Part E (except WAC 296-62-07130(1) and 296-62-07150 through 296-62-07156).

(3) Respirator selection.

(a) The employer must select the appropriate respirator from Table 1 of this section.

Table 1.—Respiratory Protection for MDA

Airborne concentration of MDA or condition of use	Respirator type
a. Less than or equal to 10xPEL	(1) Half-mask respirator with HEPA[1] cartridge.[2]
b. Less than or equal to 50xPEL	(1) Full facepiece respirator with HEPA[1] cartridge or canister.[2]
c. Less than or equal to 1000xPEL	(1) Full facepiece powered air-purifying respirator with HEPA[1] cartridges.[2]
d. Greater than 1000xPEL or unknown	(1) Self-contained breathing concentration apparatus with full facepiece in positive pressure mode; (2) Full facepiece positive-pressure demand supplied-air respirator with auxiliary self-contained air supply.
e. Escape	(1) Any full facepiece air-purifying respirator with HEPA[1] cartridges;[2] (2) Any positive pressure or continuous flow self-contained breathing apparatus with full facepiece or hood.
f. Fire fighting	(1) Full facepiece self-contained breathing apparatus in positive pressure mode.

Note: Respirators assigned for higher environmental concentration may be used at lower concentrations.

[1] High efficiency particulate in air filter (HEPA) means a filter that is at least 99.97 percent efficient against mono-dispersed particles of 0.3 micrometers or larger.

[2] Combination HEPA/organic vapor cartridges shall be used whenever MDA in liquid form or a process requiring heat is used.

(b) An employee who cannot use a negative-pressure respirator must be given the option of using a positive-pressure respirator, or a supplied-air respirator operated in the continuous-flow or pressure-demand mode.

[Statutory Authority: RCW 49.17.010, [49.17].040 and [49.17].050. 99-10-071, § 296-155-17317, filed 5/4/99, effective 9/1/99. Statutory Authority: Chapter 49.17 RCW. 93-04-111 (Order 92-15), § 296-155-17317, filed 2/3/93, effective 3/15/93.]

WAC 296-155-17319 Protective work clothing and equipment. (1) Provision and use. Where employees are subject to dermal exposure to MDA, where liquids containing MDA can be splashed into the eyes, or where airborne concentrations of MDA are in excess of the PEL, the employer shall provide, at no cost to the employee, and ensure that the employee uses, appropriate protective work clothing and equipment which prevent contact with MDA such as, but not limited to:

(a) Aprons, coveralls, or other full-body work clothing;

(b) Gloves, head coverings, and foot coverings; and

(c) Face shields, chemical goggles; or

(d) Other appropriate protective equipment which comply with WAC 296-24-078.

(2) Removal and storage.

(a) The employer shall ensure that, at the end of their work shift, employees remove MDA-contaminated protective work clothing and equipment that is not routinely removed throughout the day in change areas provided in accordance with the provisions in WAC 296-155-17321.

(b) The employer shall ensure that, during their work shift, employees remove all other MDA-contaminated protective work clothing or equipment before leaving a regulated area.

(c) The employer shall ensure that no employee takes MDA-contaminated work clothing or equipment out of the decontamination areas, except those employees authorized to do so for the purpose of laundering, maintenance, or disposal.

(d) MDA-contaminated work clothing or equipment shall be placed and stored and transported in sealed, impermeable bags, or other closed impermeable containers.

(e) Containers of MDA-contaminated protective work clothing or equipment which are to be taken out of decontamination areas or the workplace for cleaning, maintenance, or disposal, shall bear labels warning of the hazards of MDA.

(3) Cleaning and replacement.

(a) The employer shall provide the employee with clean protective clothing and equipment. The employer shall ensure that protective work clothing or equipment required by this section is cleaned, laundered, repaired, or replaced at intervals appropriate to maintain its effectiveness.

(b) The employer shall prohibit the removal of MDA from protective work clothing or equipment by blowing, shaking, or any methods which allow MDA to reenter the workplace.

(c) The employer shall ensure that laundering of MDA-contaminated clothing shall be done so as to prevent the release of MDA in the workplace.

(d) Any employer who gives MDA-contaminated clothing to another person for laundering shall inform such person of the requirement to prevent the release of MDA.

(e) The employer shall inform any person who launders or cleans protective clothing or equipment contaminated with MDA of the potentially harmful effects of exposure.

(4) Visual examination.

(a) The employer shall ensure that employees' work clothing is examined periodically for rips or tears that may occur during performance of work.

(b) When rips or tears are detected, the protective equipment or clothing shall be repaired and replaced immediately.

[Statutory Authority: Chapter 49.17 RCW. 93-04-111 (Order 92-15), § 296-155-17319, filed 2/3/93, effective 3/15/93.]

WAC 296-155-17321 Hygiene facilities and practices. (1) General.

(a) The employer shall provide decontamination areas for employees required to work in regulated areas or required by WAC 296-155-17319 to wear protective clothing. Exception: In lieu of the decontamination area requirement specified in this subsection, the employer may permit employees engaged in small scale, short duration operations, to clean

their protective clothing or dispose of the protective clothing before such employees leave the area where the work was performed.

(b) Change areas. The employer shall ensure that change areas are equipped with separate storage facilities for protective clothing and street clothing, in accordance with WAC 296-24-12011.

(c) Equipment area. The equipment area shall be supplied with impermeable, labeled bags and containers for the containment and disposal of contaminated protective clothing and equipment.

(2) Shower area.

(a) Where feasible, shower facilities shall be provided which comply with WAC 296-24-12010 wherever the possibility of employee exposure to airborne levels of MDA in excess of the permissible exposure limit exists.

(b) Where dermal exposure to MDA occurs, the employer shall ensure that materials spilled or deposited on the skin are removed as soon as possible by methods which do not facilitate the dermal absorption of MDA.

(3) Lunch areas.

(a) Whenever food or beverages are consumed at the worksite and employees are exposed to MDA the employer shall provide clean lunch areas were MDA levels are below the action level and where no dermal exposure to MDA can occur.

(b) The employer shall ensure that employees wash their hands and faces with soap and water prior to eating, drinking, smoking, or applying cosmetics.

(c) The employer shall ensure that employees do not enter lunch facilities with contaminated protective work clothing or equipment.

[Statutory Authority: RCW 49.17.010, [49.17].040, and [49.17].050. 01-11-038, § 296-155-17321, filed 5/9/01, effective 9/1/01. Statutory Authority: Chapter 49.17 RCW. 93-04-111 (Order 92-15), § 296-155-17321, filed 2/3/93, effective 3/15/93.]

WAC 296-155-17323 Communication of hazards to employees. (1) Signs and labels.

(a) The employer shall post and maintain legible signs demarcating regulated areas and entrances or accessways to regulated areas that bear the following legend:

DANGER MDA MAY CAUSE CANCER LIVER TOXIN
AUTHORIZED PERSONNEL ONLY
RESPIRATORS AND PROTECTIVE CLOTHING
MAY BE REQUIRED TO BE WORN IN THIS AREA

(b) The employer shall ensure that labels or other appropriate forms of warning are provided for containers of MDA within the workplace. The labels shall comply with the requirements of WAC 296-800-170 and shall include one of the following legends:

(i) For pure MDA

DANGER CONTAINS MDA MAY CAUSE CANCER LIVER TOXIN

(ii) For mixtures containing MDA

DANGER CONTAINS MDA CONTAINS MATERIALS
WHICH MAY CAUSE CANCER LIVER TOXIN

(2) Material safety data sheets (MSDS). Employers shall obtain or develop, and shall provide access to their employees to, a material safety data sheet (MSDS) for MDA.

(3) Information and training.

(a) The employer shall provide employees with information and training on MDA, in accordance with WAC 296-800-170, at the time of initial assignment and at least annually thereafter.

(b) In addition to the information required under WAC 296-800-170, the employer shall:

(i) Provide an explanation of the contents of this section, including Appendices A and B of this section, and indicate to employees where a copy of the standard is available;

(ii) Describe the medical surveillance program required under WAC 296-155-17327, and explain the information contained in Appendix C of this standard; and

(iii) Describe the medical removal provision required under WAC 296-155-17327.

(4) Access to training materials.

(a) The employer shall make readily available to all affected employees, without cost, all written materials relating to the employee training program, including a copy of this regulation.

(b) The employer shall provide to the director, upon request, all information and training materials relating to the employee information and training program.

[Statutory Authority: RCW 49.17.010, [49.17].040, and [49.17].050. 01-11-038, § 296-155-17323, filed 5/9/01, effective 9/1/01. Statutory Authority: Chapter 49.17 RCW. 93-04-111 (Order 92-15), § 296-155-17323, filed 2/3/93, effective 3/15/93.]

WAC 296-155-17325 Housekeeping. (1) All surfaces shall be maintained as free as practicable of visible accumulations of MDA.

(2) The employer shall institute a program for detecting MDA leaks, spills, and discharges, including regular visual inspections of operations involving liquid or solid MDA.

(3) All leaks shall be repaired and liquid or dust spills cleaned up promptly.

(4) Surfaces contaminated with MDA may not be cleaned by the use of compressed air.

(5) Shoveling, dry sweeping, and other methods of dry clean-up of MDA may be used where HEPA-filtered vacuuming and/or wet cleaning are not feasible or practical.

(6) Waste, scrap, debris, bags, containers, equipment, and clothing contaminated with MDA shall be collected and disposed of in a manner to prevent the reentry of MDA into the workplace.

[Statutory Authority: Chapter 49.17 RCW. 93-04-111 (Order 92-15), § 296-155-17325, filed 2/3/93, effective 3/15/93.]

WAC 296-155-17327 Medical surveillance. (1) General.

(a) The employer shall make available a medical surveillance program for employees exposed to MDA under the following circumstances:

(i) Employees exposed at or above the action level for 30 or more days per year;

(ii) Employees who are subject to dermal exposure to MDA for 15 or more days per year;

(iii) Employees who have been exposed in an emergency situation;

(iv) Employees whom the employer, based on results from compliance with WAC 296-155-17311(8) has reason to believe are being dermally exposed; and

(v) Employees who show signs or symptoms of MDA exposure.

(b) The employer shall ensure that all medical examinations and procedures are performed by or under the supervision of a licensed physician at a reasonable time and place, and provided without cost to the employee.

(2) Initial examinations.

(a) Within 150 days of the effective date of this standard, or before the time of initial assignment, the employer shall provide each employee covered by subsection (1)(a) of this section with a medical examination including the following elements:

A detailed history which includes:

(i) Past work exposure to MDA or any other toxic substances;

(ii) A history of drugs, alcohol, tobacco, and medication routinely taken (duration and quantity); and

(iii) A history of dermatitis, chemical skin sensitization, or previous hepatic disease.

(iv) A physical examination which includes all routine physical examination parameters, skin examination, and examination for signs of liver disease.

(v) Laboratory tests including:

(A) Liver function tests; and

(B) Urinalysis.

(vi) Additional tests as necessary in the opinion of the physician.

(b) No initial medical examination is required if adequate records show that the employee has been examined in accordance with the requirements of this section within the previous six months prior to the effective date of this standard or prior to the date of initial assignment.

(3) Periodic examinations.

(a) The employer shall provide each employee covered by this section with a medical examination at least annually following the initial examination. These periodic examinations shall include at least the following elements:

(i) A brief history regarding any new exposure to potential liver toxins, changes in drug, tobacco, and alcohol intake, and the appearance of physical signs relating to the liver and the skin;

(ii) The appropriate tests and examinations including liver function tests and skin examinations; and

(iii) Appropriate additional tests or examinations as deemed necessary by the physician.

(b) If in the physician's opinion the results of liver function tests indicate an abnormality, the employee shall be removed from further MDA exposure in accordance with WAC 296-155-17329. Repeat liver function tests shall be conducted on advice of the physician.

(4) Emergency examinations. If the employer determines that the employee has been exposed to a potentially hazardous amount of MDA in an emergency situation under WAC 296-155-17309, the employer shall provide medical examinations in accordance with subsection (3)(a) and (b). If the results of liver function testing indicate an abnormality, the employee shall be removed in accordance with WAC 296-155-17329. Repeat liver function tests shall be conducted on the advice of the physician. If the results of the tests are normal, tests must be repeated two to three weeks from the initial testing. If the results of the second set of tests are normal and on the advice of the physician, no additional testing is required.

(5) Additional examinations. Where the employee develops signs and symptoms associated with exposure to MDA, the employer shall provide the employee with an additional medical examination including liver function tests. Repeat liver function tests shall be conducted on the advice of the physician. If the results of the tests are normal, tests must be repeated two to three weeks from the initial testing. If the results of the second set of tests are normal and on the advice of the physician, no additional testing is required.

(6) Multiple physician review mechanism.

(a) If the employer selects the initial physician who conducts any medical examination or consultation provided to an employee under this section, and the employee has signs or symptoms of occupational exposure to MDA (which could include an abnormal liver function test), and the employee disagrees with the opinion of the examining physician, and this opinion could affect the employee's job status, the employee may designate an appropriate and mutually acceptable second physician:

(i) To review any findings, determinations, or recommendations of the initial physician; and

(ii) To conduct such examinations, consultations, and laboratory tests as the second physician deems necessary to facilitate this review.

(b) The employer shall promptly notify an employee of the right to seek a second medical opinion after each occasion that an initial physician conducts a medical examination or consultation pursuant to this section. The employer may condition its participation in, and payment for, the multiple physician review mechanism upon the employee doing the following within 15 days after receipt of the foregoing notification, or receipt of the initial physician's written opinion, whichever is later:

(i) The employee informing the employer that he or she intends to seek a second medical opinion; and

(ii) The employee initiating steps to make an appointment with a second physician.

(c) If the findings, determinations, or recommendations of the second physician differ from those of the initial physician, then the employer and the employee shall assure that efforts are made for the two physicians to resolve any disagreement.

(d) If the two physicians have been unable to quickly resolve their disagreement, then the employer and the employee through their respective physicians shall designate a third physician:

(i) To review any findings, determinations, or recommendations of the prior physicians; and

(ii) To conduct such examinations, consultations, laboratory tests, and discussions with the prior physicians as the third physician deems necessary to resolve the disagreement of the prior physicians.

(e) The employer shall act consistent with the findings, determinations, and recommendations of the second physi-

cian, unless the employer and the employee reach a mutually acceptable agreement.

(f) Information provided to the examining physician.

(i) The employer shall provide the following information to the examining physician:

(A) A copy of this regulation and its appendices;

(B) A description of the affected employee's duties as they relate to the employee's potential exposure to MDA;

(C) The employee's current actual or representative MDA exposure level;

(D) A description of any personal protective equipment used or to be used; and

(E) Information from previous employment related medical examinations of the affected employee.

(ii) The employer shall provide the foregoing information to a second physician under this section upon request either by the second physician, or by the employee.

(g) Physician's written opinion.

(i) For each examination under this section, the employer shall obtain, and provide the employee with a copy of, the examining physician's written opinion within 15 days of its receipt. The written opinion shall include the following:

(A) The occupationally pertinent results of the medical examination and tests;

(B) The physician's opinion concerning whether the employee has any detected medical conditions which would place the employee at increased risk of material impairment of health from exposure to MDA;

(C) The physician's recommended limitations upon the employee's exposure to MDA or upon the employee's use of protective clothing or equipment and respirators; and

(D) A statement that the employee has been informed by the physician of the results of the medical examination and any medical conditions resulting from MDA exposure which require further explanation or treatment.

(ii) The written opinion obtained by the employer shall not reveal specific findings or diagnoses unrelated to occupational exposures.

[Statutory Authority: Chapter 49.17 RCW. 93-04-111 (Order 92-15), § 296-155-17327, filed 2/3/93, effective 3/15/93.]

WAC 296-155-17329 Medical removal. (1) Temporary medical removal of an employee.

(a) Temporary removal resulting from occupational exposure. The employee shall be removed from work environments in which exposure to MDA is at or above the action level or where dermal exposure to MDA may occur, following an initial examination (WAC 296-155-17327(2)), periodic examinations (WAC 296-155-17327(3)), an emergency situation (WAC 296-155-17327(4)), or an additional examination (WAC 296-155-17327(5)) in the following circumstances:

(i) When the employee exhibits signs and/or symptoms indicative of acute exposure to MDA; or

(ii) When the examining physician determines that an employee's abnormal liver function tests are not associated with MDA exposure but that the abnormalities may be exacerbated as a result of occupational exposure to MDA.

(b) Temporary removal due to a final medical determination.

(i) The employer shall remove an employee from work having an exposure to MDA at or above the action level or where the potential for dermal exposure exists on each occasion that a final medical determination results in a medical finding, determination, or opinion that the employee has a detected medical condition which places the employee at increased risk of material impairment to health from exposure to MDA.

(ii) For the purposes of this section, the phrase "final medical determination" shall mean the outcome of the physician review mechanism used pursuant to the medical surveillance provisions of this section.

(iii) Where a final medical determination results in any recommended special protective measures for an employee, or limitations on an employee's exposure to MDA, the employer shall implement and act consistent with the reccommendation.

(2) Return of the employee to former job status.

(a) The employer shall return an employee to her or his former job status:

(i) When the employee no longer shows signs or symptoms of exposure to MDA, or upon the advice of the physician.

(ii) When a subsequent final medical determination results in a medical finding, determination, or opinion that the employee no longer has a detected medical condition which places the employee at increased risk of material impairment to health from exposure to MDA.

(b) For the purposes of this section, the requirement that an employer return an employee to his or her former job status is not intended to expand upon or restrict any rights an employee has or would have had, absent temporary medical removal, to a specific job classification or position under the terms of a collective bargaining agreement.

(3) Removal of other employee special protective measure or limitations. The employer shall remove any limitations placed on an employee or end any special protective measures provided to an employee pursuant to a final medical determination when a subsequent final medical determination indicates that the limitations or special protective measures are no longer necessary.

(4) Employer options pending a final medical determination. Where the physician review mechanism used pursuant to the medical surveillance provisions of this section has not yet resulted in a final medical determination with respect to an employee, the employer shall act as follows:

(a) Removal. The employer may remove the employee from exposure to MDA, provide special protective measures to the employee, or place limitations upon the employee, consistent with the medical findings, determinations, or reccommendations of the physician who has reviewed the employee's health status.

(b) Return. The employer may return the employee to her or his former job status, and end any special protective measures provided to the employee, consistent with the medical findings, determinations, or reccommendations of any of the physicians who have reviewed the employee's health status, with two exceptions:

(i) If the initial removal, special protection, or limitation of the employee resulted from a final medical determination

which differed from the findings, determinations, or reccommendations of the initial physician; or

(ii) The employee has been on removal status for the preceding six months as a result of exposure to MDA, then the employer shall await a final medical determination.

(5) Medical removal protection benefits.

(a) Provisions of medical removal protection benefits. The employer shall provide to an employee up to six months of medical removal protection benefits on each occasion that an employee is removed from exposure to MDA or otherwise limited pursuant to this section.

(b) Definition of medical removal protection benefits. For the purposes of this section, the requirement that an employer provide medical removal protection benefits means that the employer shall maintain the earnings, seniority, and other employment rights and benefits of an employee as though the employee had not been removed from normal exposure to MDA or otherwise limited.

(c) Follow-up medical surveillance during the period of employee removal or limitations. During the period of time that an employee is removed from normal exposure to MDA or otherwise limited, the employer may condition the provision of medical removal protection benefits upon the employee's participation in follow-up medical surveillance made available pursuant to this section.

(d) Workers' compensation claims. If a removed employee files a claim for workers' compensation payments for an MDA-related disability, then the employer shall continue to provide medical removal protection benefits pending disposition of the claim. To the extent that an award is made to the employee for earnings lost during the period of removal, the employer's medical removal protection obligation shall be reduced by such amount. The employer shall receive no credit for workers' compensation payments received by the employee for treatment-related expenses.

(e) Other credits. The employer's obligation to provide medical removal protection benefits to a removed employee shall be reduced to the extent that the employee receives compensation for earnings lost during the period of removal either from a publicly or employer-funded compensation program, or receives income from employment with any employer made possible by virtue of the employee's removal.

(f) Employees who do not recover within the 6 months of removal. The employer shall take the following measures with respect to any employee removed from exposure to MDA:

(i) The employer shall make available to the employee a medical examination pursuant to this section to obtain a final medical determination with respect to the employee;

(ii) The employer shall assure that the final medical determination obtained indicates whether or not the employee may be returned to her or his former job status, and, if not, what steps should be taken to protect the employee's health;

(iii) Where the final medical determination has not yet been obtained, or once obtained indicates that the employee may not yet be returned to her or his former job status, the employer shall continue to provide medical removal protection benefits to the employee until either the employee is returned to former job status, or a final medical determination is made that the employee is incapable of ever safely returning to her or his former job status; and

(iv) Where the employer acts pursuant to a final medical determination which permits the return of the employee to her or his former job status despite what would otherwise be an unacceptable liver function test, later questions concerning removing the employee again shall be decided by a final medical determination. The employer need not automatically remove such an employee pursuant to the MDA removal criteria provided by this section.

(6) Voluntary removal or restriction of an employee. Where an employer, although not required by this section to do so, removes an employee from exposure to MDA or otherwise places limitations on an employee due to the effects of MDA exposure on the employee's medical condition, the employer shall provide medical removal protection benefits to the employee equal to that required by subsection (5) of this section.

[Statutory Authority: Chapter 49.17 RCW. 93-04-111 (Order 92-15), § 296-155-17329, filed 2/3/93, effective 3/15/93.]

WAC 296-155-17331 Recordkeeping. (1) Objective data for exempted operations.

(a) Where the employer has relied on objective data that demonstrate that products made from or containing MDA are not capable of releasing MDA or do not present a dermal exposure problem under the expected conditions of processing, use, or handling to exempt such operations from the initial monitoring requirements under WAC 296-155-17311(2), the employer shall establish and maintain an accurate record of objective data reasonably relied upon in support of the exemption.

(b) The record shall include at least the following information:

(i) The product qualifying for exemption;

(ii) The source of the objective data;

(iii) The testing protocol, results of testing, and/or analysis of the material for the release of MDA;

(iv) A description of the operation exempted and how the data support the exemption; and

(v) Other data relevant to the operations, materials, processing, or employee exposures covered by the exemption.

(c) The employer shall maintain this record for the duration of the employer's reliance upon such objective data.

(2) Historical monitoring data.

(a) Where the employer has relied on historical monitoring data that demonstrate that exposures on a particular job will be below the action level to exempt such operations from the initial monitoring requirements under WAC 296-155-17311(2), the employer shall establish and maintain an accurate record of historical monitoring data reasonably relied upon in support of the exception.

(b) The record shall include information that reflect the following conditions:

(i) The data upon which judgments are based are scientifically sound and were collected using methods that are sufficiently accurate and precise;

(ii) The processes and work practices that were in use when the historical monitoring data were obtained are essentially the same as those to be used during the job for which initial monitoring will not be performed;

(iii) The characteristics of the MDA-containing material being handled when the historical monitoring data were obtained are the same as those on the job for which initial monitoring will not be performed;

(iv) Environmental conditions prevailing when the historical monitoring data were obtained are the same as those on the job for which initial monitoring will not be performed; and

(v) Other data relevant to the operations, materials, processing, or employee exposures covered by the exception.

(c) The employer shall maintain this record for the duration of the employer's reliance upon such historical monitoring data.

(3) The employer may utilize the services of competent organizations such as industry trade associations and employee associations to maintain the records required by this section.

(4) Exposure measurements.

(a) The employer shall keep an accurate record of all measurements taken to monitor employee exposure to MDA.

(b) This record shall include at least the following information:

(i) The date of measurement;

(ii) The operation involving exposure to MDA;

(iii) Sampling and analytical methods used and evidence of their accuracy;

(iv) Number, duration, and results of samples taken;

(v) Type of protective devices worn, if any; and

(vi) Name, Social Security number, and exposure of the employees whose exposures are represented.

(c) The employer shall maintain this record for at least thirty years in accordance with chapter 296-62 WAC, Part B.

(5) Medical surveillance.

(a) The employer shall establish and maintain an accurate record for each employee subject to medical surveillance by WAC 296-155-17327 in accordance with chapter 296-62 WAC, Part B.

(b) The record shall include at least the following information:

(i) The name and Social Security number of the employee;

(ii) A copy of the employee's medical examination results, including the medical history, questionnaire responses, results of any tests, and physician's recommendations;

(iii) Physician's written opinions;

(iv) Any employee medical complaints related to exposure to MDA; and

(v) A copy of the information provided to the physician as required by WAC 296-155-17327.

(c) The employer shall ensure that this record is maintained for the duration of employment plus thirty years in accordance with chapter 296-62 WAC, Part B.

(d) A copy of the employee's medical removal and return to work status.

(6) Training records. The employer shall maintain all employee training records for one year beyond the last date of employment.

(7) Availability.

(a) The employer, upon written request, shall make all records required to be maintained by this section available to the assistant secretary and the director for examination and copying.

(b) The employer, upon request, shall make any exposure records required by WAC 296-155-17311 and 296-155-17327 available for examination and copying to affected employees, former employees, designated representatives, and the director, in accordance with chapter 296-802 WAC.

(c) The employer, upon request, shall make employee medical records required by WAC 296-155-17327 and this section available for examination and copying to the subject employee, anyone having the specific written consent of the subject employee, and the director in accordance with chapter 296-802 WAC.

(8) Transfer of records.

(a) The employer shall comply with the requirements concerning transfer of records set forth in chapter 296-802 WAC.

(b) Whenever the employer ceases to do business and there is no successor employer to receive and retain the records for the prescribed period, the employer shall notify the director at least 90 days prior to disposal and, upon request, transmit them to the director.

[Statutory Authority: RCW 49.17.010, 49.17.040, 49.17.050, and 49.17.060. 04-10-026, § 296-155-17331, filed 4/27/04, effective 8/1/04. Statutory Authority: Chapter 49.17 RCW. 93-04-111 (Order 92-15), § 296-155-17331, filed 2/3/93, effective 3/15/93.]

WAC 296-155-17333 Observation of monitoring. (1) Employee observation. The employer shall provide affected employees, or their designated representatives, an opportunity to observe the measuring or monitoring of employee exposure to MDA conducted pursuant to WAC 296-155-17311.

(2) Observation procedures. When observation of the measuring or monitoring of employee exposure to MDA requires entry into areas where the use of protective clothing and equipment or respirators is required, the employer shall provide the observer with personal protective clothing and equipment or respirators required to be worn by employees working in the area, assure the use of such clothing and equipment or respirators, and require the observer to comply with all other applicable safety and health procedures.

[Statutory Authority: Chapter 49.17 RCW. 93-04-111 (Order 92-15), § 296-155-17333, filed 2/3/93, effective 3/15/93.]

WAC 296-155-17337 Appendices. The information contained in Appendices A, B, C, and D of this standard is not intended by itself, to create any additional obligations not otherwise imposed by this standard nor detract from any existing obligation.

[Statutory Authority: RCW 49.17.010, [49.17].040 and [49.17].050. 99-10-071, § 296-155-17337, filed 5/4/99, effective 9/1/99. Statutory Authority: Chapter 49.17 RCW. 93-04-111 (Order 92-15), § 296-155-17337, filed 2/3/93, effective 3/15/93.]

WAC 296-155-17339 Startup dates. Compliance with all obligations of this standard commence March 3, 1993, except as follows:

(1) Initial monitoring under WAC 296-155-17311(2) shall be completed as soon as possible but no later than June 3, 1993.

(2) Medical examinations under WAC 296-155-17327, shall be completed as soon as possible but no later than August 14, 1993.

(3) Emergency plans required by WAC 296-155-17309 shall be provided and available for inspection and copying as soon as possible but no later than July 13, 1993.

(4) Initial training and education shall be completed as soon as possible but no later than July 13, 1993.

(5) Decontamination and lunch areas under WAC 296-155-17321 shall be in operation as soon as possible but no later than March 3, 1993.

(6) Respiratory protection required by WAC 296-155-17317 shall be provided as soon as possible but no later than July 13, 1993.

(7) Written compliance plans required by WAC 296-155-17315(5) shall be completed and available for inspection and copying as soon as possible but no later than July 13, 1993.

(8) WISHA shall enforce the permissible exposure limits in WAC 296-155-17305 no earlier than July 13, 1993.

(9) Engineering controls needed to achieve the PELs must be in place March 3, 1993.

(10) Personal protective clothing required by WAC 296-155-17317 shall be available July 13, 1993.

[Statutory Authority: Chapter 49.17 RCW. 93-04-111 (Order 92-15), § 296-155-17339, filed 2/3/93, effective 3/15/93.]

WAC 296-155-17341 Appendix A to WAC 296-155-173—Substance data sheet, for 4-4'-methylenedianiline. (1) Substance identification.

(a) Substance: Methylenedianiline (MDA).

(b) Permissible exposure:

(i) Airborne: Ten parts per billion parts of air (10 ppb), time-weighted average (TWA) for an 8-hour workday and an action level of five parts per billion parts of air (5 ppb).

(ii) Dermal: Eye contact and skin contact with MDA are not permitted.

(c) Appearance and odor: White to tan solid; amine odor.

(2) Health hazard data.

(a) Ways in which MDA affects your health. MDA can affect your health if you inhale it or if it comes in contact with your skin or eyes. MDA is also harmful if you happen to swallow it. Do not get MDA in eyes, on skin, or on clothing.

(b) Effects of overexposure.

(i) Short-term (acute) overexposure: Overexposure to MDA may produce fever, chills, loss of appetite, vomiting, jaundice. Contact may irritate skin, eyes, and mucous membranes. Sensitization may occur.

(ii) Long-term (chronic) exposure. Repeated or prolonged exposure to MDA, even at relatively low concentrations, may cause cancer. In addition, damage to the liver, kidneys, blood, and spleen may occur with long-term exposure.

(iii) Reporting signs and symptoms: You should inform your employer if you develop any signs or symptoms which you suspect are caused by exposure to MDA including yellow staining of the skin.

(3) Protective clothing and equipment.

(a) Respirators. Respirators are required for those operations in which engineering controls or work practice controls are not adequate or feasible to reduce exposure to the permissible limit. If respirators are worn, they must be certified by the National Institute for Occupational Safety and Health (NIOSH) under 42 CFR part 84, and cartridges or canisters must be replaced as necessary to maintain the effectiveness of the respirator. If you experience difficulty breathing while wearing a respirator, you may request a positive-pressure respirator from your employer. You must be thoroughly trained to use the assigned respirator, and the training will be provided by your employer. MDA does not have a detectable odor except at levels well above the permissible exposure limits. Do not depend on odor to warn you when a respirator canister is exhausted. If you can smell MDA while wearing a respirator, proceed immediately to fresh air. If you experience difficulty breathing while wearing a respirator, tell your employer.

(b) Protective clothing. You may be required to wear coveralls, aprons, gloves, face shields, or other appropriate protective clothing to prevent skin contact with MDA. Where protective clothing is required, your employer is required to provide clean garments to you, as necessary, to assure that the clothing protects you adequately. Replace or repair impervious clothing that has developed leaks. MDA should never be allowed to remain on the skin. Clothing and shoes which are not impervious to MDA should not be allowed to become contaminated with MDA, and if they do, the clothing and shoes should be promptly removed and decontaminated. The clothing should be laundered to remove MDA or discarded. Once MDA penetrates shoes or other leather articles, they should not be worn again.

(c) Eye protection. You must wear splashproof safety goggles in areas where liquid MDA may contact your eyes. Contact lenses should not be worn in areas where eye contact with MDA can occur. In addition, you must wear a face shield if your face could be splashed with MDA liquid.

(4) Emergency and first-aid procedures.

(a) Eye and face exposure. If MDA is splashed into the eyes, wash the eyes for at least 15 minutes. See a doctor as soon as possible.

(b) Skin exposure. If MDA is spilled on your clothing or skin, remove the contaminated clothing and wash the exposed skin with large amounts of soap and water immediately. Wash contaminated clothing before you wear it again.

(c) Breathing. If you or any other person breathes in large amounts of MDA, get the exposed person to fresh air at once. Apply artificial respiration if breathing has stopped. Call for medical assistance or a doctor as soon as possible. Never enter any vessel or confined space where the MDA concentration might be high without proper safety equipment and at least one other person present who will stay outside. A life line should be used.

(d) Swallowing. If MDA has been swallowed and the patient is conscious, do not induce vomiting. Call for medical assistance or a doctor immediately.

(5) Medical requirements. If you are exposed to MDA at a concentration at or above the action level for more than 30 days per year, or exposed to liquid mixtures more than 15 days per year, your employer is required to provide a medical examination, including a medical history and laboratory tests, within 60 days of the effective date of this standard and annually thereafter. These tests shall be provided without cost to you. In addition, if you are accidentally exposed to MDA

(either by ingestion, inhalation, or skin/eye contact) under conditions known or suspected to constitute toxic exposure to MDA, your employer is required to make special examinations and tests available to you.

(6) Observation of monitoring. Your employer is required to perform measurements that are representative of your exposure to MDA and you or your designated representative are entitled to observe the monitoring procedure. You are entitled to observe the steps taken in the measurement procedure and to record the results obtained. When the monitoring procedure is taking place in an area where respirators or personal protective clothing and equipment are required to be worn; you and your representative must also be provided with, and must wear, the protective clothing and equipment.

(7) Access to records. You or your representative are entitled to see the records of measurements of your exposure to MDA upon written request to your employer. Your medical examination records can be furnished to your physician or designated representative upon request by you to your employer.

(8) Precautions for safe use, handling, and storage.

(a) Material is combustible. Avoid strong acids and their anhydrides. Avoid strong oxidants. Consult supervisor for disposal requirements.

(b) Emergency clean-up. Wear self-contained breathing apparatus and fully clothe the body in the appropriate personal protective clothing and equipment.

[Statutory Authority: RCW 49.17.010, [49.17].040 and [49.17].050. 99-10-071, § 296-155-17341, filed 5/4/99, effective 9/1/99. Statutory Authority: Chapter 49.17 RCW. 93-04-111 (Order 92-15), § 296-155-17341, filed 2/3/93, effective 3/15/93.]

WAC 296-155-17343 Appendix B to WAC 296-155-173—Substance technical guidelines, MDA. (1) Identification.

(a) Substance identification.

(i) Synonyms: CAS No. 101-77-9. 4,4'-methylenedianiline; 4,4'-methylenebisaniline; methylenedianiline; dianilinomethane.

(ii) Formula: $C_{13}H_{14}N_2$.

(b) Physical data.

(2) Appearance and odor: White to tan solid; amine odor.

(a) Molecular weight: 198.26.

(b) Boiling point: 398-399 degrees C. at 760 mm Hg.

(c) Melting point: 88-93 degrees C. (190-100 degrees F.).

(d) Vapor pressure: 9 mm Hg at 232 degrees C.

(e) Evaporation rate (n-butyl acetate=1): Negligible.

(f) Vapor density (Air=1): Not applicable.

(g) Volatile fraction by weight: Negligible.

(h) Specific gravity (Water=1): Slight.

(i) Heat of combustion: -8.40 kcal/g.

(j) Solubility in water: Slightly soluble in cold water, very soluble in alcohol, benzene, ether, and many organic solvents.

(3) Fire, explosion, and reactivity hazard data.

(a) Flash point: 190 degrees C. (374 degrees F.) Setaflash closed cup.

(b) Flash point: 226 degrees C. (439 degrees F.) Cleveland open cup.

(c) Extinguishing media: Water spray; dry chemical; carbon dioxide.

(d) Special fire fighting procedures: Wear self-contained breathing apparatus and protective clothing to prevent contact with skin and eyes.

(e) Unusual fire and explosion hazards: Fire or excessive heat may cause production of hazardous decomposition products.

(4) Reactivity data.

(a) Stability: Stable.

(b) Incompatibility: Strong oxidizers.

(c) Hazardous decomposition products: As with any other organic material, combustion may produce carbon monoxide. Oxides of nitrogen may also be present.

(d) Hazardous polymerization: Will not occur.

(5) Spill and leak procedures.

(a) Sweep material onto paper and place in fiber carton.

(b) Package appropriately for safe feed to an incinerator or dissolve in compatible waste solvents prior to incineration.

(c) Dispose of in an approved incinerator equipped with afterburner and scrubber or contract with licensed chemical waste disposal service.

(d) Discharge treatment or disposal may be subject to federal, state, or local laws.

(e) Wear appropriate personal protective equipment.

(6) Special storage and handling precautions.

(a) High exposure to MDA can occur when transferring the substance from one container to another. Such operations should be well ventilated and good work practices must be established to avoid spills.

(b) Pure MDA is a solid with a low vapor pressure. Grinding or heating operations increase the potential for exposure.

(c) Store away from oxidizing materials.

(d) Employers shall advise employees of all areas and operations where exposure to MDA could occur.

(7) Housekeeping and hygiene facilities.

(a) The workplace should be kept clean, orderly, and in a sanitary condition. The employer should institute a leak and spill detection program for operations involving MDA in order to detect sources of fugitive MDA emissions.

(b) Adequate washing facilities with hot and cold water are to be provided and maintained in a sanitary condition. Suitable cleansing agents should also be provided to assure the effective removal of MDA from the skin.

(8) Common operations. Common operations in which exposure to MDA is likely to occur include the following: Manufacture of MDA; manufacture of methylene diisocyanate; curing agent for epoxy resin structures; wire coating operations; and filament winding.

[Statutory Authority: Chapter 49.17 RCW. 93-04-111 (Order 92-15), § 296-155-17343, filed 2/3/93, effective 3/15/93.]

WAC 296-155-17345 Appendix C to WAC 296-155-173—Medical surveillance guidelines for MDA. (1) Route of entry. Inhalation; skin absorption; ingestion. MDA can be inhaled, absorbed through the skin, or ingested.

(2) Toxicology. MDA is a suspect carcinogen in humans. There are several reports of liver disease in humans and animals resulting from acute exposure to MDA. A well documented case of an acute cardiomyopathy secondary to expo-

sure to MDA is on record. Numerous human cases of hepatitis secondary to MDA are known. Upon direct contact MDA may also cause damage to the eyes. Dermatitis and skin sensitization have been observed. Almost all forms of acute environmental hepatic injury in humans involve the hepatic parenchyma and produce hepatocellular jaundice. This agent produces intrahepatic cholestasis. The clinical picture consists of cholestatic jaundice, preceded or accompanied by abdominal pain, fever, and chills. Onset in about 60% of all observed cases is abrupt with severe abdominal pain. In about 30% of observed cases, the illness presented and evolved more slowly and less dramatically, with only slight abdominal pain. In about 10% of the cases only jaundice was evident. The cholestatic nature of the jaundice is evident in the prominence of itching, the histologic predominance of bile stasis, and portal inflammatory infiltration, accompanied by only slight parenchymal injury in most cases, and by the moderately elevated transaminase values. Acute, high doses, however, have been known to cause hepatocellular damage resulting in elevated SGPT, SGOT, alkaline phosphatase, and bilirubin. Absorption through the skin is rapid. MDA is metabolized and excreted over a 48-hour period. Direct contact may be irritating to the skin, causing dermatitis. Also MDA which is deposited on the skin is not thoroughly removed through washing. MDA may cause bladder cancer in humans. Animal data supporting this assumption is not available nor is conclusive human data. However, human data collected on workers at a helicopter manufacturing facility where MDA is used suggests a higher incidence of bladder cancer among exposed workers.

(3) Signs and symptoms. Skin may become yellow from contact with MDA. Repeated or prolonged contact with MDA may result in recurring dermatitis (red-itchy, cracked skin) and eye irritation. Inhalation, ingestion, or absorption through the skin at high concentrations may result in hepatitis, causing symptoms such as fever and chills, nausea and vomiting, dark urine, anorexia, rash, right upper quadrant pain, and jaundice. Corneal burns may occur when MDA is splashed in the eyes.

(4) Treatment of acute toxic effects/emergency situation. If MDA gets into the eyes, immediately wash eyes with large amounts of water. If MDA is splashed on the skin, immediately wash contaminated skin with mild soap or detergent. Employee should be removed from exposure and given proper medical treatment. Medical tests required under the emergency section of the medical surveillance (WAC 296-155-17327(4)) must be conducted. If the chemical is swallowed do not induce vomiting but remove by gastric lavage.

[Statutory Authority: Chapter 49.17 RCW. 93-04-111 (Order 92-15), § 296-155-17345, filed 2/3/93, effective 3/15/93.]

WAC 296-155-17347 Appendix D to WAC 296-155-173—Sampling and analytical methods for MDA monitoring and measurement procedures. Measurements taken for the purpose of determining employee exposure to MDA are best taken so that the representative average 8-hour exposure may be determined from a single 8-hour sample or two 4-hour samples. Short-time interval samples (or grab samples) may also be used to determine average exposure level if a minimum of five measurements are taken in a random manner over the 8-hour work shift. Random sampling means that any portion of the work shift has the same chance of being sampled as any other. The arithmetic average of all such random samples taken on one work shift is an estimate of an employee's average level of exposure for that work shift. Air samples should be taken in the employee's breathing zone (air that would most nearly represent that inhaled by the employee). There are a number of methods available for monitoring employee exposures to MDA. The method OSHA currently uses is included below. The employer however has the obligation of selecting any monitoring method which meets the accuracy and precision requirements of the standard under her or his unique field conditions. The standard requires that the method of monitoring must have an accuracy, to a 95 percent confidence level, of not less than plus or minus 25 percent for the select PEL.

WISHA methodology.

Sampling procedure.

Apparatus:

Samples are collected by use of a personal sampling pump that can be calibrated within +/-5% of the recommended flow rate with the sampling filter in line. Samples are collected on 37 mm Gelman type A/E glass fiber filters treated with sulfuric acid. The filters are prepared by soaking each filter with 0.5 mL of 0.26N H_2SO_4. (0.26 N H_2SO_4 can be prepared by diluting 1.5 mL of 36N H_2SO_4 to 200 mL with deionized water.) The filters are dried in an oven at 100 degrees C. for one hour and then assembled into three-piece 37 mm polystyrene cassettes without backup pads. The front filter is separated from the back filter by a polystyrene spacer. The cassettes are sealed with shrink bands and the ends are plugged with plastic plugs. After sampling, the filters are carefully removed from the cassettes and individually transferred to small vials containing approximately 2 mL deionized water. The vials must be tightly sealed. The water can be added before or after the filters are transferred. The vials must be sealable and capable of holding at least 7 mL of liquid. Small glass scintillation vials with caps containing Teflon liners are recommended.

Reagents:

Deionized water is needed for addition to the vials.

Sampling technique:

Immediately before sampling, remove the plastic plugs from the filter cassettes. Attach the cassette to the sampling pump with flexible tubing and place the cassette in the employee's breathing zone. After sampling, seal the cassettes with plastic plugs until the filters are transferred to the vials containing deionized water. At some convenient time within 10 hours of sampling, transfer the sample filters to vials. Seal the small vials lengthwise. Submit at least one blank filter with each sample set. Blanks should be handled in the same manner as samples, but no air is drawn through them. Record sample volumes (in L of air) for each sample, along with any potential interferences.

Retention efficiency:

A retention efficiency study was performed by drawing 100 L of air (80% relative humidity) at 1 L/min through sample filters that had been spiked with 0.814 micro-g MDA. Instead of using backup pads, blank acid-treated filters were used as

backups in each cassette. Upon analysis, the top filters were found to have an average of 91.8% of the spiked amount. There was no MDA found on the bottom filters, so the amount lost was probably due to the slight instability of the MDA salt.

Extraction efficiency:

The average extraction efficiency for six filters spiked at the target concentration is 99.6%. The stability of extracted and derivatized samples was verified by reanalyzing the above six samples the next day using fresh standards. The average extraction efficiency for the reanalyzed samples is 98.7%.

Recommended air volume and sampling rate. The recommended air volume is 100 L. The recommended sampling rate is 1 L/min.

Interferences (sampling):

MDI appears to be a positive interference. It was found that when MDI was spiked onto an acid-treated filter, the MDI converted to MDA after air was drawn through it. Suspected interferences should be reported to the laboratory with submitted samples.

Safety precautions (sampling):

Attach the sampling equipment to the employees so that it will not interfere with work performance or safety. Follow all safety procedures that apply to the work area being sampled.

Analytical procedure:

Apparatus:

The following are required for analysis. A GC equipped with an electron capture detector. For this evaluation a Hewlett Packard 5880 Gas Chromatograph equipped with a Nickel 63 High Temperature Electron Capture Detector and a Linearizer was used. A GC column capable of separating the MDA derivative from the solvent and interferences. A 6 ft x 2 mm ID glass column packed with 3% OV-101 coated on 100/120 Gas Chrom Q or a 25 meter DB-1 or DB-5 capillary column is recommended for this evaluation. An electronic integrator or some other suitable means of measuring peak areas or heights. Small resealable vials with Teflon-lined caps capable of holding 4 mL. A dispenser or pipet for toluene capable of delivering 2.9 mL. Pipets (or repipets with plastic or Teflon tips) capable of delivering 1 mL for the sodium hydroxide and buffer solutions. A repipet capable of delivering 25 micro-L HFAA. Syringes for preparation of standards and injection of standards and samples into a GC. Volumetric flasks and pipets to dilute the pure MDA in preparation of standards. Disposable pipets to transfer the toluene layers after the samples are extracted.

Reagents:

0.5 NaOH prepared from reagent grade NaOH. Toluene, pesticide grade. Burdick and Jackson distilled in glass toluene was used. Heptafluorobutyric acid anhydride (HFAA). HFAA from Pierce Chemical Company was used. pH 7.0 phosphate buffer, prepared from 136 g potassium dihydrogen phosphate and 1 L deionized water. The pH is adjusted to 7.0 with saturated sodium hydroxide solution. 4,4'-methylenedianiline (MDA), reagent grade.

Standard preparation:

Concentrated stock standards are prepared by diluting pure MDA with toluene. Analytical standards are prepared by injecting micro-L amounts of diluted stock standards into vials that contain 2.0 mL toluene. 25 micro-L HFAA are added to each vial and the vials are capped and shaken for 10 seconds. After 10 min, 1 mL of buffer is added to each vial. The vials are recapped and shaken for 10 seconds. After allowing the layers to separate, aliquots of the toluene (upper) layers are removed with a syringe and analyzed by GC. Analytical standard concentrations should bracket sample concentrations. Thus, if samples fall out of the range of prepared standards, additional standards must be prepared to ascertain detector response.

Sample preparation:

The sample filters are received in vials containing deionized water. 1 mL of 0.5N NaOH and 2.0 mL toluene are added to each vial. The vials are recapped and shaken for 10 min. After allowing the layers to separate, approximately 1 mL aliquots of the toluene (upper) layers are transferred to separate vials with clean disposable pipets. The toluene layers are treated and analyzed.

Analysis:

GC conditions.

Zone temperatures: Column—220 degrees C. Injector—235 degrees C. Detector—335 degrees C. Gas flows, N_2 Column—30 mL/min He Purge—Column 0.9 mL/min. (capillary) with 30 mL/min. $ArCH_4$ (95/5) make up gas Injection volume: 5.0 uL Column: 6 ft x 1/8 in ID glass, 3% OV-101 on 100/120 Gas Chrom Q or 25 Retention time of MDA derivative: 2.5 to 3.5, depending on column and flow.

Chromatogram. Peak areas or heights are measured by an integrator or other suitable means. A calibration curve is constructed by plotting response (peak areas or heights) of standard injections versus micro-g of MDA per sample. Sample concentrations must be bracketed by standards.

Interferences (analytical):

Any compound that gives an electron capture detector response and has the same general retention time as the HFAA derivative of MDA is a potential interference. Suspected interferences reported to the laboratory with submitted samples by the industrial hygienist must be considered before samples are derivatized. GC parameters may be changed to possibly circumvent interferences. Retention time on a single column is not considered proof of chemical identity. Analyte identity should be confirmed by GC/MS if possible.

Calculations:

The analyte concentration for samples is obtained from the calibration curve in terms of micro-g MDA per sample. The extraction efficiency is 100%. If any MDA is found on the blank, that amount is subtracted from the sample amounts. The air concentrations are calculated using the following formulae. micro-$\mu g/m^3$ = (micro-μg MDA per sample) (1000)/(L of air sampled) ppb = (micro-$\mu g/m^3$) (24.46)/(198.3) = (micro-$\mu g/m^3$)(0.1233) where 24.46 is the molar volume at 25 degrees C. and 760 mm Hg.

Safety precautions (analytical). Avoid skin contact and inhalation of all chemicals. Restrict the use of all chemicals to a

fume hood if possible. Wear safety glasses and a lab coat at all times while in the lab area.

[Statutory Authority: Chapter 49.17 RCW. 93-04-111 (Order 92-15), § 296-155-17347, filed 2/3/93, effective 3/15/93.]

WAC 296-155-174 Cadmium. (1) Scope. This standard applies to all occupational exposures to cadmium and cadmium compounds, in all forms, in all construction work where an employee may potentially be exposed to cadmium. Construction work is defined as work involving construction, alteration, and/or repair, including but not limited to the following:

(a) Wrecking, demolition, or salvage of structures where cadmium or materials containing cadmium are present;

(b) Use of cadmium containing-paints and cutting, brazing, burning, grinding, or welding on surfaces that were painted with cadmium-containing paints;

(c) Construction, alteration, repair, maintenance, or renovation of structures, substrates, or portions thereof, that contain cadmium, or materials containing cadmium;

(d) Cadmium welding; cutting and welding cadmium-plated steel; brazing or welding with cadmium alloys;

(e) Installation of products containing cadmium;

(f) Electrical grounding with cadmium-welding, or electrical work using cadmium-coated conduit;

(g) Maintaining or retrofitting cadmium-coated equipment;

(h) Cadmium contamination/emergency cleanup; and

(i) Transportation, disposal, storage, or containment of cadmium or materials containing cadmium on the site or location at which construction activities are performed.

(2) Definitions.

(a) Action level (AL) is defined as an airborne concentration of cadmium of 2.5 micrograms per cubic meter of air (2.5 $\mu g/m^3$), calculated as an 8-hour time-weighted average (TWA).

(b) Authorized person means any person authorized by the employer and required by work duties to be present in regulated areas or any person authorized by WISHA or regulations issued under it to be in regulated areas.

(c) Competent person, in accordance with WAC 296-155-012(4), means a person designated by the employer to act on the employer's behalf who is capable of identifying existing and potential cadmium hazards in the workplace and the proper methods to control them in order to protect workers, and has the authority necessary to take prompt corrective measures to eliminate or control such hazards. The duties of a competent person include at least the following: Determining prior to the performance of work whether cadmium is present in the workplace; establishing, where necessary, regulated areas and assuring that access to and from those areas is limited to authorized employees; assuring the adequacy of any employee exposure monitoring required by this standard; assuring that all employees exposed to air cadmium levels above the PEL wear appropriate personal protective equipment and are trained in the use of appropriate methods of exposure control; assuring that proper hygiene facilities are provided and that workers are trained to use those facilities; and assuring that the engineering controls required by this standard are implemented, maintained in proper operating condition, and functioning properly.

(d) Director means the director of the department of labor and industries or authorized representative.

(e) Employee exposure and similar language referring to the air cadmium level to which an employee is exposed means the exposure to airborne cadmium that would occur if the employee were not using respiratory protective equipment.

(f) Final medical determination is the written medical opinion of the employee's health status by the examining physician under subsection (12)(c) through (l) of this section or, if multiple physician review under subsection (12)(m) of this section or the alternative physician determination under subsection (12)(n) of this section is invoked, it is the final, written medical finding, recommendation or determination that emerges from that process.

(g) High-efficiency particulate air (HEPA) filter means a filter capable of trapping and retaining at least 99.97 percent of mono-dispersed particles of 0.3 micrometers in diameter.

(h) Regulated area means an area demarcated by the employer where an employee's exposure to airborne concentrations of cadmium exceeds, or can reasonably be expected to exceed the permissible exposure limit (PEL).

(i) This section means this cadmium standard.

(3) Permissible exposure limit (PEL). The employer shall assure that no employee is exposed to an airborne concentration of cadmium in excess of five micrograms per cubic meter of air (5 $\mu g/m^3$), calculated as an 8-hour time-weighted average exposure (TWA).

(4) Exposure monitoring

(a) General.

(i) Prior to the performance of any construction work where employees may be potentially exposed to cadmium, the employer shall establish the applicability of this standard by determining whether cadmium is present in the workplace and whether there is the possibility that employee exposures will be at or above the action level. The employer shall designate a competent person who shall make this determination. Investigation and material testing techniques shall be used, as appropriate, in the determination. Investigation shall include a review of relevant plans, past reports, material safety data sheets, and other available records, and consultations with the property owner and discussions with appropriate individuals and agencies.

(ii) Where cadmium has been determined to be present in the workplace, and it has been determined that there is a possibility the employee's exposure will be at or above the action level, the competent person shall identify employees potentially exposed to cadmium at or above the action level.

(iii) Determinations of employee exposure shall be made from breathing-zone air samples that reflect the monitored employee's regular, daily 8-hour TWA exposure to cadmium.

(iv) Eight-hour TWA exposures shall be determined for each employee on the basis of one or more personal breathing-zone air samples reflecting full shift exposure on each shift, for each job classification, in each work area. Where several employees perform the same job tasks, in the same job classification, on the same shift, in the same work area, and the length, duration, and level of cadmium exposures are similar, an employer may sample a representative fraction of

the employees instead of all employees in order to meet this requirement. In representative sampling, the employer shall sample the employee(s) expected to have the highest cadmium exposures.

(b) Specific.

(i) Initial monitoring. Except as provided for in (b)(iii) of this subsection, where a determination conducted under (a)(i) of this subsection shows the possibility of employee exposure to cadmium at or above the action level, the employer shall conduct exposure monitoring as soon as practicable that is representative of the exposure for each employee in the workplace who is or may be exposed to cadmium at or above the action level.

(ii) In addition, if the employee periodically performs tasks that may expose the employee to a higher concentration of airborne cadmium, the employee shall be monitored while performing those tasks.

(iii) Where the employer has objective data, as defined in subsection (14)(b) of this section, demonstrating that employee exposure to cadmium will not exceed airborne concentrations at or above the action level under the expected conditions of processing, use, or handling, the employer may rely upon such data instead of implementing initial monitoring.

(iv) Where a determination conducted under (a) or (b) of this subsection is made that a potentially exposed employee is not exposed to airborne concentrations of cadmium at or above the action level, the employer shall make a written record of such determination. The record shall include at least the monitoring data developed under (b)(i) through (iii) of this subsection, where applicable, and shall also include the date of determination, and the name and Social Security number of each employee.

(c) Monitoring frequency (periodic monitoring).

(i) If the initial monitoring or periodic monitoring reveals employee exposures to be at or above the action level, the employer shall monitor at a frequency and pattern needed to assure that the monitoring results reflect with reasonable accuracy the employee's typical exposure levels, given the variability in the tasks performed, work practices, and environmental conditions on the job site, and to assure the adequacy of respiratory selection and the effectiveness of engineering and work practice controls.

(ii) If the initial monitoring or the periodic monitoring indicates that employee exposures are below the action level and that result is confirmed by the results of another monitoring taken at least seven days later, the employer may discontinue the monitoring for those employees whose exposures are represented by such monitoring.

(d) Additional monitoring. The employer also shall institute the exposure monitoring required under (b)(i) and (c) of this subsection whenever there has been a change in the raw materials, equipment, personnel, work practices, or finished products that may result in additional employees being exposed to cadmium at or above the action level or in employees already exposed to cadmium at or above the action level being exposed above the PEL, or whenever the employer or competent person has any reason to suspect that any other change might result in such further exposure.

(e) Employee notification of monitoring results.

(i) No later than five working days after the receipt of the results of any monitoring performed under this section, the employer shall notify each affected employee individually in writing of the results. In addition, within the same time period, the employer shall post the results of the exposure monitoring in an appropriate location that is accessible to all affected employees.

(ii) Wherever monitoring results indicate that employee exposure exceeds the PEL, the employer shall include in the written notice a statement that the PEL has been exceeded and a description of the corrective action being taken by the employer to reduce employee exposure to or below the PEL.

(f) Accuracy of measurement. The employer shall use a method of monitoring and analysis that has an accuracy of not less than plus or minus 25 percent (± 25%), with a confidence level of 95 percent, for airborne concentrations of cadmium at or above the action level and the permissible exposure limit.

(5) Regulated areas.

(a) Establishment. The employer shall establish a regulated area wherever an employee's exposure to airborne concentrations of cadmium is, or can reasonably be expected to be in excess of the permissible exposure limit (PEL).

(b) Demarcation. Regulated areas shall be demarcated from the rest of the workplace in any manner that adequately establishes and alerts employees of the boundaries of the regulated area, including employees who are or may be incidentally in the regulated areas, and that protects persons outside the area from exposure to airborne concentrations of cadmium in excess of the PEL.

(c) Access. Access to regulated areas shall be limited to authorized persons.

(d) Provision of respirators. Each person entering a regulated area shall be supplied with and required to use a respirator, selected in accordance with subsection (7)(b) of this section.

(e) Prohibited activities. The employer shall assure that employees do not eat, drink, smoke, chew tobacco or gum, or apply cosmetics in regulated areas, or carry the products associated with any of these activities into regulated areas or store such products in those areas.

(6) Methods of compliance.

(a) Compliance hierarchy.

(i) Except as specified in (a)(ii) of this subsection, the employer shall implement engineering and work practice controls to reduce and maintain employee exposure to cadmium at or below the PEL, except to the extent that the employer can demonstrate that such controls are not feasible.

(ii) The requirement to implement engineering controls to achieve the PEL does not apply where the employer demonstrates the following:

(A) The employee is only intermittently exposed; and

(B) The employee is not exposed above the PEL on 30 or more days per year (12 consecutive months).

(iii) Wherever engineering and work practice controls are not sufficient to reduce employee exposure to or below the PEL, the employer nonetheless shall implement such controls to reduce exposures to the lowest levels achievable. The employer shall supplement such controls with respiratory protection that complies with the requirements of subsection (7) of this section and the PEL.

(iv) The employer shall not use employee rotation as a method of compliance.

(b) Specific operations.

(i) Abrasive blasting. Abrasive blasting on cadmium or cadmium-containing materials shall be conducted in a manner that will provide adequate protection.

(ii) Heating cadmium and cadmium-containing materials. Welding, cutting, and other forms of heating of cadmium or cadmium-containing materials shall be conducted in accordance with the requirements of WAC 296-155-415 and 296-155-420, where applicable.

(c) Prohibitions.

(i) High speed abrasive disc saws and similar abrasive power equipment shall not be used for work on cadmium or cadmium-containing materials unless they are equipped with appropriate engineering controls to minimize emissions, if the exposure levels are above the PEL.

(ii) Materials containing cadmium shall not be applied by spray methods, if exposures are above the PEL, unless employees are protected with supplied-air respirators with full facepiece, hood, helmet, suit, operated in positive pressure mode and measures are instituted to limit overspray and prevent contamination of adjacent areas.

(d) Mechanical ventilation.

(i) When ventilation is used to control exposure, measurements that demonstrate the effectiveness of the system in controlling exposure, such as capture velocity, duct velocity, or static pressure shall be made as necessary to maintain its effectiveness.

(ii) Measurements of the system's effectiveness in controlling exposure shall be made as necessary within five working days of any change in production, process, or control that might result in a significant increase in employee exposure to cadmium.

(iii) Recirculation of air. If air from exhaust ventilation is recirculated into the workplace, the system shall have a high efficiency filter and be monitored to assure effectiveness.

(iv) Procedures shall be developed and implemented to minimize employee exposure to cadmium when maintenance of ventilation systems and changing of filters is being conducted.

(e) Compliance program.

(i) Where employee exposure to cadmium exceeds the PEL and the employer is required under (a) of this subsection to implement controls to comply with the PEL, prior to the commencement of the job the employer shall establish and implement a written compliance program to reduce employee exposure to or below the PEL. To the extent that engineering and work practice controls cannot reduce exposures to or below the PEL, the employer shall include in the written compliance program the use of appropriate respiratory protection to achieve compliance with the PEL.

(ii) Written compliance programs shall be reviewed and updated as often and as promptly as necessary to reflect significant changes in the employer's compliance status or significant changes in the lowest air cadmium level that is technologically feasible.

(iii) A competent person shall review the comprehensive compliance program initially and after each change.

(iv) Written compliance programs shall be provided upon request for examination and copying to the director, or authorized representatives, affected employees, and designated employee representatives.

(7) Respirator protection.

(a) General. For employees who use respirators required by this section, the employer must provide respirators that comply with the requirements of this section. Respirators must be used during:

(i) Periods necessary to install or implement feasible engineering and work-practice controls when employee exposures exceed the PEL.

(ii) Maintenance and repair activities, and brief or intermittent operations, for which employee exposures exceed the PEL and engineering and work-practice controls are not feasible or are not required.

(iii) Work operations in regulated areas specified in subsection (5) of this section.

(iv) Work operations for which the employer has implemented all feasible engineering and work-practice controls, and such controls are not sufficient to reduce exposures to or below the PEL.

(v) Emergencies.

(vi) Work operations for which an employee, who is exposed to cadmium at or above the action level, requests a respirator.

(vii) Work operations for which engineering controls are not required under (a)(ii) of this subsection to reduce employee exposures that exceed the PEL.

(b) Respirator program.

(i) The employer must implement a respiratory protection program as required by chapter 296-62 WAC, Part E (except WAC 296-62-07130(1) and 296-62-07150 through 296-62-07156).

(ii) If an employee has breathing difficulty during fit testing or respirator use, the employer must provide the employee with a medical examination as required by subsection (12)(f)(ii) of this section to determine if the employee can use a respirator while performing the required duties.

(iii) No employees must use a respirator when, based on their recent medical examination, the examining physician determines that the employee will be unable to continue to function normally while using a respirator. If the physician determines the employee must be limited in, or removed from, their current job because of the employee's inability to use a respirator, the job limitation or removal must be conducted as required by (k) and (l) of this subsection.

(c) Respirator selection.

(i) The employer must select the appropriate respirator from Table 1 of this section.

Table 1
Respiratory Protection for Cadmium

Airborne concentration or condition of use [a]	Required respirator type[b]
10 x or less	A half-mask, air-purifying respirator equipped with a HEPA[c] filter.[d]

Table 1
Respiratory Protection for Cadmium

Airborne concentration or condition of use [a]	Required respirator type[b]
25 x or less	A powered air-purifying respirator ("PAPR") with a loose-fitting hood or helmet equipped with a HEPA filter, or a supplied-air respirator with a loose-fitting hood or helmet facepiece operated in the continuous flow mode.
50 x or less	A full facepiece air-purifying respirator equipped with a HEPA filter, or a powered air-purifying respirator with a tight-fitting half-mask equipped with a HEPA filter, or a supplied air respirator with a tight-fitting half-mask operated in the continuous flow mode.
250 x or less	A powered air-purifying respirator with a tight-fitting full facepiece equipped with a HEPA filter, or a supplied-air respirator with a tight-fitting full facepiece operated in the continuous flow mode.
1000 x or less	A supplied-air respirator with half-mask or full facepiece operated in the pressure demand or other positive pressure mode.
>1000 x or unknown concentrations	A self-contained breathing apparatus with a full facepiece operated in the pressure demand or other positive pressure mode, or a supplied-air respirator with a full facepiece operated in the pressure demand or other positive pressure mode and equipped with an auxiliary escape type self-contained breathing apparatus operated in the pressure demand mode.
Fire fighting	A self-contained breathing apparatus with full facepiece operated in the pressure demand or other positive pressure mode.

Note: [a] Concentrations expressed as multiple of the PEL.

[b] Respirators assigned for higher environmental concentrations may be used at lower exposure levels. Quantitative fit testing is required for all tight-fitting air purifying respirators where airborne concentration of cadmium exceeds 10 times the TWA PEL ($10 \times 5\ \mu g/m^3 = 50\ \mu g/m^3$). A full facepiece respirator is required when eye irritation is experienced.

[c] HEPA means High Efficiency Particulate Air.

[d] Fit testing, qualitative or quantitative, is required.

Source: Respiratory Decision Logic, NIOSH, 1987.

(ii) The employer shall provide a powered, air-purifying respirator (PAPR) instead of a negative-pressure respirator when an employee entitled to a respirator chooses to use this type of respirator and such a respirator will provide adequate protection to the employee.

(8) Emergency situations. The employer shall develop and implement a written plan for dealing with emergency situations involving substantial releases of airborne cadmium. The plan shall include provisions for the use of appropriate respirators and personal protective equipment. In addition, employees not essential to correcting the emergency situation shall be restricted from the area and normal operations halted in that area until the emergency is abated.

(9) Protective work clothing and equipment

(a) Provision and use. If an employee is exposed to airborne cadmium above the PEL or where skin or eye irritation is associated with cadmium exposure at any level, the employer shall provide at no cost to the employee, and assure that the employee uses, appropriate protective work clothing and equipment that prevents contamination of the employee and the employee's garments. Protective work clothing and equipment includes, but is not limited to:

(i) Coveralls or similar full-body work clothing;

(ii) Gloves, head coverings, and boots or foot coverings; and

(iii) Face shields, vented goggles, or other appropriate protective equipment that complies with WAC 296-155-215.

(b) Removal and storage.

(i) The employer shall assure that employees remove all protective clothing and equipment contaminated with cadmium at the completion of the work shift and do so only in change rooms provided in accordance with subsection (10)(a) of this section.

(ii) The employer shall assure that no employee takes cadmium-contaminated protective clothing or equipment from the workplace, except for employees authorized to do so for purposes of laundering, cleaning, maintaining, or disposing of cadmium-contaminated protective clothing and equipment at an appropriate location or facility away from the workplace.

(iii) The employer shall assure that contaminated protective clothing and equipment, when removed for laundering, cleaning, maintenance, or disposal, is placed and stored in sealed, impermeable bags or other closed, impermeable containers that are designed to prevent dispersion of cadmium dust.

(iv) The employer shall assure that containers of contaminated protective clothing and equipment that are to be taken out of the change rooms or the workplace for laundering, cleaning, maintenance or disposal shall bear labels in accordance with subsection (13)(c) of this section.

(c) Cleaning, replacement, and disposal.

(i) The employer shall provide the protective clothing and equipment required by (a) of this subsection in a clean and dry condition as often as necessary to maintain its effectiveness, but in any event at least weekly. The employer is responsible for cleaning and laundering the protective clothing and equipment required by this subsection to maintain its effectiveness and is also responsible for disposing of such clothing and equipment.

(ii) The employer also is responsible for repairing or replacing required protective clothing and equipment as needed to maintain its effectiveness. When rips or tears are detected while an employee is working they shall be immediately mended, or the worksuit shall be immediately replaced.

(iii) The employer shall prohibit the removal of cadmium from protective clothing and equipment by blowing, shaking, or any other means that disperses cadmium into the air.

(iv) The employer shall assure that any laundering of contaminated clothing or cleaning of contaminated equipment in the workplace is done in a manner that prevents the release of airborne cadmium in excess of the permissible exposure limit prescribed in subsection (3) of this section.

(v) The employer shall inform any person who launders or cleans protective clothing or equipment contaminated with cadmium of the potentially harmful effects of exposure to cadmium, and that the clothing and equipment should be laundered or cleaned in a manner to effectively prevent the release of airborne cadmium in excess of the PEL.

(10) Hygiene areas and practices.

(a) General. For employees whose airborne exposure to cadmium is above the PEL, the employer shall provide clean change rooms, handwashing facilities, showers, and lunchroom facilities that comply with WAC 296-155-140.

(b) Change rooms. The employer shall assure that change rooms are equipped with separate storage facilities for street clothes and for protective clothing and equipment, which are designed to prevent dispersion of cadmium and contamination of the employee's street clothes.

(c) Showers and handwashing facilities.

(i) The employer shall assure that employees whose airborne exposure to cadmium is above the PEL shower during the end of the work shift.

(ii) The employer shall assure that employees who are exposed to cadmium above the PEL wash their hands and faces prior to eating, drinking, smoking, chewing tobacco or gum, or applying cosmetics.

(d) Lunchroom facilities.

(i) The employer shall assure that the lunchroom facilities are readily accessible to employees, that tables for eating are maintained free of cadmium, and that no employee in a lunchroom facility is exposed at any time to cadmium at or above a concentration of 2.5 $\mu g/m^3$.

(ii) The employer shall assure that employees do not enter lunchroom facilities with protective work clothing or equipment unless surface cadmium has been removed from the clothing and equipment by HEPA vacuuming or some other method that removes cadmium dust without dispersing it.

(11) Housekeeping.

(a) All surfaces shall be maintained as free as practicable of accumulations of cadmium.

(b) All spills and sudden releases of material containing cadmium shall be cleaned up as soon as possible.

(c) Surfaces contaminated with cadmium shall, wherever possible, be cleaned by vacuuming or other methods that minimize the likelihood of cadmium becoming airborne.

(d) HEPA-filtered vacuuming equipment or equally effective filtration methods shall be used for vacuuming. The equipment shall be used and emptied in a manner that minimizes the reentry of cadmium into the workplace.

(e) Shoveling, dry or wet sweeping, and brushing may be used only where vacuuming or other methods that minimize the likelihood of cadmium becoming airborne have been tried and found not to be effective.

(f) Compressed air shall not be used to remove cadmium from any surface unless the compressed air is used in conjunction with a ventilation system designed to capture the dust cloud created by the compressed air.

(g) Waste, scrap, debris, bags, containers, personal protective equipment, and clothing contaminated with cadmium and consigned for disposal shall be collected and disposed of in sealed impermeable bags or other closed, impermeable containers. These bags and containers shall be labeled in accordance with subsection (13)(b) of this section.

(12) Medical surveillance.

(a) General.

(i) Scope.

(A) Currently exposed—The employer shall institute a medical surveillance program for all employees who are or may be exposed at or above the action level and all employees who perform the following tasks, operations, or jobs: Electrical grounding with cadmium-welding; cutting, brazing, burning, grinding, or welding on surfaces that were painted with cadmium-containing paints; electrical work using cadmium-coated conduit; use of cadmium containing paints; cutting and welding cadmium-plated steel; brazing or welding with cadmium alloys; fusing of reinforced steel by cadmium welding; maintaining or retrofitting cadmium-coated equipment; and, wrecking and demolition where cadmium is present. A medical surveillance program will not be required if the employer demonstrates that the employee:

(I) Is not currently exposed by the employer to airborne concentrations of cadmium at or above the action level on 30 or more days per year (twelve consecutive months); and

(II) Is not currently exposed by the employer in those tasks on 30 or more days per year (twelve consecutive months).

(B) Previously exposed—The employer shall also institute a medical surveillance program for all employees who might previously have been exposed to cadmium by the employer prior to the effective date of this section in tasks specified under (a)(i)(A) of this subsection, unless the employer demonstrates that the employee did not in the years prior to the effective date of this section work in those tasks for the employer with exposure to cadmium for an aggregated total of more than 12 months.

(ii) To determine an employee's fitness for using a respirator, the employer shall provide the limited medical examination specified in (f) of this subsection.

(iii) The employer shall assure that all medical examinations and procedures required by this section are performed by or under the supervision of a licensed physician, who has read and is familiar with the health effects WAC 296-62-07441, Appendix A, the regulatory text of this section, the protocol for sample handling and lab selection in WAC 296-62-07451, Appendix F, and the questionnaire of WAC 296-62-07447, Appendix D.

(iv) The employer shall provide the medical surveillance required by this section, including multiple physician review under (m) of this subsection without cost to employees, and

at a time and place that is reasonable and convenient to employees.

(v) The employer shall assure that the collecting and handling of biological samples of cadmium in urine (CdU), cadmium in blood (CdB), and beta-2 microglobulin in urine (B_2-M) taken from employees under this section is done in a manner that assures their reliability and that analysis of biological samples of cadmium in urine (CdU), cadmium in blood (CdB), and beta-2 microglobulin in urine (B_2-M) taken from employees under this section is performed in laboratories with demonstrated proficiency to perform the particular analysis. (See WAC 296-62-07451, Appendix F.)

(b) Initial examination.

(i) For employees covered by medical surveillance under (a)(i) of this subsection, the employer shall provide an initial medical examination. The examination shall be provided to those employees within 30 days after initial assignment to a job with exposure to cadmium or no later than 90 days after the effective date of this section, whichever date is later.

(ii) The initial medical examination shall include:

(A) A detailed medical and work history, with emphasis on: Past, present, and anticipated future exposure to cadmium; any history of renal, cardiovascular, respiratory, hematopoietic, reproductive, and/or musculo-skeletal system dysfunction; current usage of medication with potential nephrotoxic side-effects; and smoking history and current status; and

(B) Biological monitoring that includes the following tests:

(I) Cadmium in urine (CdU), standardized to grams of creatinine (g/Cr);

(II) Beta-2 microglobulin in urine (B_2-M), standardized to grams of creatinine (g/Cr), with pH specified, as described in WAC 296-62-07451, Appendix F; and

(III) Cadmium in blood (CdB), standardized to liters of whole blood (lwb).

(iii) Recent examination: An initial examination is not required to be provided if adequate records show that the employee has been examined in accordance with the requirements of (b)(ii) of this subsection within the past 12 months. In that case, such records shall be maintained as part of the employee's medical record and the prior exam shall be treated as if it were an initial examination for the purposes of (c) and (d) of this subsection.

(c) Actions triggered by initial biological monitoring.

(i) If the results of the biological monitoring tests in the initial examination show the employee's CdU level to be at or below 3 μg/g Cr, B_2-M level to be at or below 300 μg/g Cr and CdB level to be at or below 5 μg/lwb, then:

(A) For employees who are subject to medical surveillance under (a)(i)(A) of this subsection because of current or anticipated exposure to cadmium, the employer shall provide the minimum level of periodic medical surveillance in accordance with the requirements in (d)(i) of this subsection; and

(B) For employees who are subject to medical surveillance under (a)(i)(B) of this subsection because of prior but not current exposure, the employer shall provide biological monitoring for CdU, B_2-M, and CdB one year after the initial biological monitoring and then the employer shall comply with the requirements of (d)(vi) of this subsection.

(ii) For all employees who are subject to medical surveillance under (a)(i) of this subsection, if the results of the initial biological monitoring tests show the level of CdU to exceed 3 μg/g Cr, the level of B_2-M to be in excess of 300 μg/g Cr, or the level of CdB to be in excess of 5 μg/lwb, the employer shall:

(A) Within two weeks after receipt of biological monitoring results, reassess the employee's occupational exposure to cadmium as follows:

(I) Reassess the employee's work practices and personal hygiene;

(II) Reevaluate the employee's respirator use, if any, and the respirator program;

(III) Review the hygiene facilities;

(IV) Reevaluate the maintenance and effectiveness of the relevant engineering controls;

(V) Assess the employee's smoking history and status;

(B) Within 30 days after the exposure reassessment, specified in (c)(ii)(A) of this subsection, take reasonable steps to correct any deficiencies found in the reassessment that may be responsible for the employee's excess exposure to cadmium; and

(C) Within 90 days after receipt of biological monitoring results, provide a full medical examination to the employee in accordance with the requirements of (d)(ii) of this subsection. After completing the medical examination, the examining physician shall determine in a written medical opinion whether to medically remove the employee. If the physician determines that medical removal is not necessary, then until the employee's CdU level falls to or below 3 μg/g Cr, B_2-M level falls to or below 300 μg/g Cr and CdB level falls to or below 5 μg/lwb, the employer shall:

(I) Provide biological monitoring in accordance with (b)(ii)(B) of this subsection on a semiannual basis; and

(II) Provide annual medical examinations in accordance with (d)(ii) of this subsection.

(iii) For all employees who are subject to medical surveillance under (a)(i) of this subsection, if the results of the initial biological monitoring tests show the level of CdU to be in excess of 15 μg/g Cr, or the level of CdB to be in excess of 15 μg/lwb, or the level of B_2-M to be in excess of 1,500 μg/g Cr, the employer shall comply with the requirements of (c)(ii)(A) and (B) of this subsection. Within 90 days after receipt of biological monitoring results, the employer shall provide a full medical examination to the employee in accordance with the requirements of (d)(ii) of this subsection. After completing the medical examination, the examining physician shall determine in a written medical opinion whether to medically remove the employee. However, if the initial biological monitoring results and the biological monitoring results obtained during the medical examination both show that: CdU exceeds 15 μg/g Cr; or CdB exceeds 15 μg/lwb; or B_2-M exceeds 1500 μ/g Cr, and in addition CdU exceeds 3 μg/g Cr or CdB exceeds 5 μg/liter of whole blood, then the physician shall medically remove the employee from exposure to cadmium at or above the action level. If the second set of biological monitoring results obtained during the medical examination does not show that a mandatory removal trigger level has been exceeded, then the employee

is not required to be removed by the mandatory provisions of this section. If the employee is not required to be removed by the mandatory provisions of this section or by the physician's determination, then until the employee's CdU level falls to or below 3 μg/g Cr, B_2-M level falls to or below 300 μg/g Cr and CdB level falls to or below 5 μg/lwb, the employer shall:

(A) Periodically reassess the employee's occupational exposure to cadmium;

(B) Provide biological monitoring in accordance with (b)(ii)(B) of this subsection on a quarterly basis; and

(C) Provide semiannual medical examinations in accordance with (d)(ii) of this subsection.

(iv) For all employees to whom medical surveillance is provided, beginning on January 1, 1999, and in lieu of (c)(iii) of this subsection, whenever the results of initial biological monitoring tests show the employee's CdU level to be in excess of 7 μg/g Cr, or B_2-M level to be in excess of 750 μg/g Cr, or CdB level to be in excess of 10 μg/lwb, the employer shall comply with the requirements of (c)(ii)(A) and (B) of this subsection. Within 90 days after receipt of biological monitoring results, the employer shall provide a full medical examination to the employee in accordance with the requirements of (d)(ii) of this subsection. After completing the medical examination, the examining physician shall determine in a written medical opinion whether to medically remove the employee. However, if the initial biological monitoring results and the biological monitoring results obtained during the medical examination both show that: CdU exceeds 7 μg/g Cr; or CdB exceeds 10 μg/lwb; or B_2-M exceeds 750 μg/g Cr, and in addition CdU exceeds 3 μg/g Cr or CdB exceeds 5 μg/liter of whole blood, then the physician shall medically remove the employee from exposure to cadmium at or above the action level. If the second set of biological monitoring results obtained during the medical examination does not show that a mandatory removal trigger level has been exceeded, then the employee is not required to be removed by the mandatory provisions of this section. If the employee is not required to be removed by the mandatory provisions of this section or by the physician's determination, then until the employee's CdU level falls to or below 3 μg/g Cr, B_2-M level falls to or below 300 μg/g Cr and CdB level falls to or below 5 μg/lwb, the employer shall:

(A) Periodically reassess the employee's occupational exposure to cadmium;

(B) Provide biological monitoring in accordance with (b)(ii)(B) of this subsection on a quarterly basis; and

(C) Provide semiannual medical examinations in accordance with (d)(ii) of this subsection.

(d) Periodic medical surveillance.

(i) For each employee who is covered by medical surveillance under (a)(i)(A) of this subsection because of current or anticipated exposure to cadmium, the employer shall provide at least the minimum level of periodic medical surveillance, which consists of periodic medical examinations and periodic biological monitoring. A periodic medical examination shall be provided within one year after the initial examination required by (b) of this subsection and thereafter at least biennially. Biological sampling shall be provided at least annually either as part of a periodic medical examination or separately as periodic biological monitoring.

(ii) The periodic medical examination shall include:

(A) A detailed medical and work history, or update thereof, with emphasis on: Past, present, and anticipated future exposure to cadmium; smoking history and current status; reproductive history; current use of medications with potential nephrotoxic side-effects; any history of renal, cardiovascular, respiratory, hematopoietic, and/or musculoskeletal system dysfunction; and as part of the medical and work history, for employees who wear respirators, questions 3 through 11 and 25 through 32 in WAC 296-62-07447, Appendix D;

(B) A complete physical examination with emphasis on: Blood pressure, the respiratory system, and the urinary system;

(C) A 14 inch by 17 inch, or a reasonably standard sized posterior-anterior chest X ray (after the initial X ray, the frequency of chest X rays is to be determined by the examining physician);

(D) Pulmonary function tests, including forced vital capacity (FVC) and forced expiratory volume at 1 second (FEV1);

(E) Biological monitoring, as required in (b)(ii)(B) of this subsection;

(F) Blood analysis, in addition to the analysis required under (b)(ii)(B) of this subsection, including blood urea nitrogen, complete blood count, and serum creatinine;

(G) Urinalysis, in addition to the analysis required under (b)(ii)(B) of this subsection, including the determination of albumin, glucose, and total and low molecular weight proteins;

(H) For males over 40 years old, prostate palpation, or other at least as effective diagnostic test(s); and

(I) Any additional tests or procedures deemed appropriate by the examining physician.

(iii) Periodic biological monitoring shall be provided in accordance with (b)(ii)(B) of this subsection.

(iv) If the results of periodic biological monitoring or the results of biological monitoring performed as part of the periodic medical examination show the level of the employee's CdU, B_2-M, or CdB to be in excess of the levels specified in (c)(ii) and (iii) of this subsection; or, beginning on January 1, 1999, in excess of the levels specified in (c)(ii) or (iv) of this subsection, the employer shall take the appropriate actions specified in (c)(ii) through (iv) of this subsection, respectively.

(v) For previously exposed employees under (a)(i)(B) of this subsection:

(A) If the employee's levels of CdU did not exceed 3 μg/g Cr, CdB did not exceed 5 μg/lwb, and B_2-M did not exceed 300 μg/g Cr in the initial biological monitoring tests, and if the results of the follow-up biological monitoring required by (c)(i)(B) of this subsection one year after the initial examination confirm the previous results, the employer may discontinue all periodic medical surveillance for that employee.

(B) If the initial biological monitoring results for CdU, CdB, or B_2-M were in excess of the levels specified in (c)(i) of this subsection, but subsequent biological monitoring

results required by (c)(ii) through (iv) of this subsection show that the employee's CdU levels no longer exceed 3 μg/g Cr, CdB levels no longer exceed 5 μg/lwb, and B_2-M levels no longer exceed 300 μg/g Cr, the employer shall provide biological monitoring for CdU, CdB, and B_2-M one year after these most recent biological monitoring results. If the results of the follow-up biological monitoring specified in this section, confirm the previous results, the employer may discontinue all periodic medical surveillance for that employee.

(C) However, if the results of the follow-up tests specified in (d)(v)(A) or (B) of this subsection indicate that the level of the employee's CdU, B_2-M, or CdB exceeds these same levels, the employer is required to provide annual medical examinations in accordance with the provisions of (d)(ii) of this subsection until the results of biological monitoring are consistently below these levels or the examining physician determines in a written medical opinion that further medical surveillance is not required to protect the employee's health.

(vi) A routine, biennial medical examination is not required to be provided in accordance with (c)(i) and (d) of this subsection if adequate medical records show that the employee has been examined in accordance with the requirements of (d)(ii) of this subsection within the past 12 months. In that case, such records shall be maintained by the employer as part of the employee's medical record, and the next routine, periodic medical examination shall be made available to the employee within two years of the previous examination.

(e) Actions triggered by medical examinations. If the results of a medical examination carried out in accordance with this section indicate any laboratory or clinical finding consistent with cadmium toxicity that does not require employer action under (b), (c), or (d) of this subsection, the employer shall take the following steps and continue to take them until the physician determines that they are no longer necessary.

(i) Periodically reassess: The employee's work practices and personal hygiene; the employee's respirator use, if any; the employee's smoking history and status; the respiratory protection program; the hygiene facilities; the maintenance and effectiveness of the relevant engineering controls; and take all reasonable steps to correct the deficiencies found in the reassessment that may be responsible for the employee's excess exposure to cadmium.

(ii) Provide semiannual medical reexaminations to evaluate the abnormal clinical sign(s) of cadmium toxicity until the results are normal or the employee is medically removed; and

(iii) Where the results of tests for total proteins in urine are abnormal, provide a more detailed medical evaluation of the toxic effects of cadmium on the employee's renal system.

(f) Examination for respirator use.

(i) To determine an employee's fitness for respirator use, the employer shall provide a medical examination that includes the elements specified in (f)(i)(A) through (D) of this subsection. This examination shall be provided prior to the employee's being assigned to a job that requires the use of a respirator or no later than 90 days after this section goes into effect, whichever date is later, to any employee without a medical examination within the preceding 12 months that satisfies the requirements of this section.

(A) A detailed medical and work history, or update thereof, with emphasis on: Past exposure to cadmium; smoking history and current status; any history of renal, cardiovascular, respiratory, hematopoietic, and/or musculo-skeletal system dysfunction; a description of the job for which the respirator is required; and questions 3 through 11 and 25 through 32 in WAC 296-62-07447, Appendix D;

(B) A blood pressure test;

(C) Biological monitoring of the employee's levels of CdU, CdB and B_2-M in accordance with the requirements of (b)(ii)(B) of this subsection, unless such results already have been obtained within the twelve months; and

(D) Any other test or procedure that the examining physician deems appropriate.

(ii) After reviewing all the information obtained from the medical examination required in (f)(i) of this subsection, the physician shall determine whether the employee is fit to wear a respirator.

(iii) Whenever an employee has exhibited difficulty in breathing during a respirator fit test or during use of a respirator, the employer, as soon as possible, shall provide the employee with a periodic medical examination in accordance with (d)(ii) of this subsection to determine the employee's fitness to wear a respirator.

(iv) Where the results of the examination required under (f)(i), (ii), or (iii) of this subsection are abnormal, medical limitation or prohibition of respirator use shall be considered. If the employee is allowed to wear a respirator, the employee's ability to continue to do so shall be periodically evaluated by a physician.

(g) Emergency examinations.

(i) In addition to the medical surveillance required in (b) through (f) of this subsection, the employer shall provide a medical examination as soon as possible to any employee who may have been acutely exposed to cadmium because of an emergency.

(ii) The examination shall include the requirements of (d)(ii), of this subsection, with emphasis on the respiratory system, other organ systems considered appropriate by the examining physician, and symptoms of acute overexposure, as identified in Appendix A, WAC 296-62-07441 (2)(b)(i) and (ii) and (4).

(h) Termination of employment examination.

(i) At termination of employment, the employer shall provide a medical examination in accordance with (d)(ii) of this subsection, including a chest X ray where necessary, to any employee to whom at any prior time the employer was required to provide medical surveillance under (a)(i) or (g) of this subsection. However, if the last examination satisfied the requirements of (d)(ii) of this subsection and was less than six months prior to the date of termination, no further examination is required unless otherwise specified in (c) or (e) of this subsection;

(ii) In addition, if the employer has discontinued all periodic medical surveillance under (d)(v) of this subsection, no termination of employment medical examination is required.

(i) Information provided to the physician. The employer shall provide the following information to the examining physician:

(i) A copy of this standard and appendices;

(ii) A description of the affected employee's former, current, and anticipated duties as they relate to the employee's occupational exposure to cadmium;

(iii) The employee's former, current, and anticipated future levels of occupational exposure to cadmium;

(iv) A description of any personal protective equipment, including respirators, used or to be used by the employee, including when and for how long the employee has used that equipment; and

(v) Relevant results of previous biological monitoring and medical examinations.

(j) Physician's written medical opinion.

(i) The employer shall promptly obtain a written, signed, medical opinion from the examining physician for each medical examination performed on each employee. This written opinion shall contain:

(A) The physician's diagnosis for the employee;

(B) The physician's opinion as to whether the employee has any detected medical condition(s) that would place the employee at increased risk of material impairment to health from further exposure to cadmium, including any indications of potential cadmium toxicity;

(C) The results of any biological or other testing or related evaluations that directly assess the employee's absorption of cadmium;

(D) Any recommended removal from, or limitation on the activities or duties of the employee or on the employee's use of personal protective equipment, such as respirators;

(E) A statement that the physician has clearly and carefully explained to the employee the results of the medical examination, including all biological monitoring results and any medical conditions related to cadmium exposure that require further evaluation or treatment, and any limitation on the employee's diet or use of medications.

(ii) The employer shall promptly obtain a copy of the results of any biological monitoring provided by an employer to an employee independently of a medical examination under (b) and (d) of this subsection, and, in lieu of a written medical opinion, an explanation sheet explaining those results.

(iii) The employer shall instruct the physician not to reveal orally or in the written medical opinion given to the employer specific findings or diagnoses unrelated to occupational exposure to cadmium.

(k) Medical removal protection (MRP).

(i) General.

(A) The employer shall temporarily remove an employee from work where there is excess exposure to cadmium on each occasion that medical removal is required under (c), (d), or (f) of this subsection and on each occasion that a physician determines in a written medical opinion that the employee should be removed from such exposure. The physician's determination may be based on biological monitoring results, inability to wear a respirator, evidence of illness, other signs or symptoms of cadmium-related dysfunction or disease, or any other reason deemed medically sufficient by the physician.

(B) The employer shall medically remove an employee in accordance with (k) of this subsection regardless of whether at the time of removal a job is available into which the removed employee may be transferred.

(C) Whenever an employee is medically removed under (k) of this subsection, the employer shall transfer the removed employee to a job where the exposure to cadmium is within the permissible levels specified in subsection (12) of this section as soon as one becomes available.

(D) For any employee who is medically removed under the provisions of (k)(i) of this subsection, the employer shall provide follow-up medical examinations semiannually until, in a written medical opinion, the examining physician determines that either the employee may be returned to his/her former job status or the employee must be permanently removed from excess cadmium exposure.

(E) The employer may not return an employee who has been medically removed for any reason to his/her former job status until a physician determines in a written medical opinion that continued medical removal is no longer necessary to protect the employee's health.

(ii) Where an employee is found unfit to wear a respirator under (f)(ii) of this subsection, the employer shall remove the employee from work where exposure to cadmium is above the PEL.

(iii) Where removal is based upon any reason other than the employee's inability to wear a respirator, the employer shall remove the employee from work where exposure to cadmium is at or above the action level.

(iv) Except as specified in (k)(v) of this subsection, no employee who was removed because his/her level of CdU, CdB and/or B_2-M exceeded the trigger levels in (c) or (d) of this subsection may be returned to work with exposure to cadmium at or above the action level until the employee's levels of CdU fall to or below 3 μg/g Cr, CdB fall to or below 5 μg/lwb, and B_2-M fall to or below 300 μg/g Cr.

(v) However, when in the examining physician's opinion continued exposure to cadmium will not pose an increased risk to the employee's health and there are special circumstances that make continued medical removal an inappropriate remedy, the physician shall fully discuss these matters with the employee, and then in a written determination may return a worker to his/her former job status despite what would otherwise be unacceptably high biological monitoring results. Thereafter and until such time as the employee's biological monitoring results have decreased to levels where he/she could have been returned to his/her former job status, the returned employee shall continue medical surveillance as if he/she were still on medical removal. Until such time, the employee is no longer subject to mandatory medical removal. Subsequent questions regarding the employee's medical removal shall be decided solely by a final medical determination.

(vi) Where an employer, although not required by this section to do so, removes an employee from exposure to cadmium or otherwise places limitations on an employee due to the effects of cadmium exposure on the employee's medical condition, the employer shall provide the same medical removal protection benefits to that employee under (l) of this subsection as would have been provided had the removal been required under (k) of this subsection.

(l) Medical removal protection benefits.

(i) The employer shall provide medical removal protection benefits to an employee for up to a maximum of 18 months each time, and while the employee is temporarily medically removed under (k) of this subsection.

(ii) For purposes of this section, the requirement that the employer provide medical removal protection benefits means that the employer shall maintain the total normal earnings, seniority, and all other employee rights and benefits of the removed employee, including the employee's right to his/her former job status, as if the employee had not been removed from the employee's job or otherwise medically limited.

(iii) Where, after 18 months on medical removal because of elevated biological monitoring results, the employee's monitoring results have not declined to a low enough level to permit the employee to be returned to his/her former job status:

(A) The employer shall make available to the employee a medical examination pursuant to this section in order to obtain a final medical determination as to whether the employee may be returned to his/her former job status or must be permanently removed from excess cadmium exposure; and

(B) The employer shall assure that the final medical determination indicates whether the employee may be returned to his/her former job status and what steps, if any, should be taken to protect the employee's health.

(iv) The employer may condition the provision of medical removal protection benefits upon the employee's participation in medical surveillance provided in accordance with this section.

(m) Multiple physician review.

(i) If the employer selects the initial physician to conduct any medical examination or consultation provided to an employee under this section, the employee may designate a second physician to:

(A) Review any findings, determinations, or recommendations of the initial physician; and

(B) Conduct such examinations, consultations, and laboratory tests as the second physician deems necessary to facilitate this review.

(ii) The employer shall promptly notify an employee of the right to seek a second medical opinion after each occasion that an initial physician provided by the employer conducts a medical examination or consultation pursuant to this section. The employer may condition its participation in, and payment for, multiple physician review upon the employee doing the following within fifteen (15) days after receipt of this notice, or receipt of the initial physician's written opinion, whichever is later:

(A) Informing the employer that he or she intends to seek a medical opinion; and

(B) Initiating steps to make an appointment with a second physician.

(iii) If the findings, determinations, or recommendations of the second physician differ from those of the initial physician, then the employer and the employee shall assure that efforts are made for the two physicians to resolve any disagreement.

(iv) If the two physicians have been unable to quickly resolve their disagreement, then the employer and the employee, through their respective physicians, shall designate a third physician to:

(A) Review any findings, determinations, or recommendations of the other two physicians; and

(B) Conduct such examinations, consultations, laboratory tests, and discussions with the other two physicians as the third physician deems necessary to resolve the disagreement among them.

(v) The employer shall act consistently with the findings, determinations, and recommendations of the third physician, unless the employer and the employee reach an agreement that is consistent with the recommendations of at least one of the other two physicians.

(n) Alternate physician determination. The employer and an employee or designated employee representative may agree upon the use of any alternate form of physician determination in lieu of the multiple physician review provided by (m) of this subsection, so long as the alternative is expeditious and at least as protective of the employee.

(o) Information the employer must provide the employee.

(i) The employer shall provide a copy of the physician's written medical opinion to the examined employee within five working days after receipt thereof.

(ii) The employer shall provide the employee with a copy of the employee's biological monitoring results and an explanation sheet explaining the results within five working days after receipt thereof.

(iii) Within 30 days after a request by an employee, the employer shall provide the employee with the information the employer is required to provide the examining physician under (i) of this subsection.

(p) Reporting. In addition to other medical events that are required to be reported on the OSHA Form No. 200, the employer shall report any abnormal condition or disorder caused by occupational exposure to cadmium associated with employment as specified in Chapter (V)(E) of the Bureau of Labor Statistics Recordkeeping Guidelines for Occupational Injuries and Illnesses.

(13) Communication of cadmium hazards to employees

(a) General. In communications concerning cadmium hazards, employers shall comply with the requirements of WISHA's Hazard Communication Standard, chapter 296-62 WAC, Part C, including but not limited to the requirements concerning warning signs and labels, material safety data sheets (MSDS), and employee information and training. In addition, employers shall comply with the following requirements:

(b) Warning signs.

(i) Warning signs shall be provided and displayed in regulated areas. In addition, warning signs shall be posted at all approaches to regulated areas so that an employee may read the signs and take necessary protective steps before entering the area.

(ii) Warning signs required by (b)(i) of this subsection shall bear the following information:

Danger, Cadmium, Cancer Hazard, Can Cause Lung and Kidney Disease, Authorized Personnel Only, Respirators Required in This Area

(iii) The employer shall assure that signs required by this section are illuminated, cleaned, and maintained as necessary so that the legend is readily visible.

(c) Warning labels.

(i) Shipping and storage containers containing cadmium, cadmium compounds, or cadmium contaminated clothing, equipment, waste, scrap, or debris shall bear appropriate warning labels, as specified in (c)(ii) of this subsection.

(ii) The warning labels shall include at least the following information:

Danger, Contains Cadmium, Cancer Hazard, Avoid Creating Dust, Can Cause Lung and Kidney Disease

(iii) Where feasible, installed cadmium products shall have a visible label or other indication that cadmium is present.

(d) Employee information and training.

(i) The employer shall institute a training program for all employees who are potentially exposed to cadmium, assure employee participation in the program, and maintain a record of the contents of such program.

(ii) Training shall be provided prior to or at the time of initial assignment to a job involving potential exposure to cadmium and at least annually thereafter.

(iii) The employer shall make the training program understandable to the employee and shall assure that each employee is informed of the following:

(A) The health hazards associated with cadmium exposure, with special attention to the information incorporated in WAC 296-62-07441, Appendix A;

(B) The quantity, location, manner of use, release, and storage of cadmium in the workplace and the specific nature of operations that could result in exposure to cadmium, especially exposures above the PEL;

(C) The engineering controls and work practices associated with the employee's job assignment;

(D) The measures employees can take to protect themselves from exposure to cadmium, including modification of such habits as smoking and personal hygiene, and specific procedures the employer has implemented to protect employees from exposure to cadmium such as appropriate work practices, emergency procedures, and the provision of personal protective equipment;

(E) The purpose, proper selection, fitting, proper use, and limitations of respirators and protective clothing;

(F) The purpose and a description of the medical surveillance program required by subsection (12) of this section;

(G) The contents of this section and its appendices; and

(H) The employee's rights of access to records under chapter 296-62 WAC, Part B.

(iv) Additional access to information and training program and materials.

(A) The employer shall make a copy of this section and its appendices readily available to all affected employees and shall provide a copy without cost if requested.

(B) Upon request, the employer shall provide to the director or authorized representative, all materials relating to the employee information and the training program.

(e) Multiemployer workplace. In a multiemployer workplace, an employer who produces, uses, or stores cadmium in a manner that may expose employees of other employers to cadmium shall notify those employers of the potential hazard in accordance with WAC 296-800-170 of the chemical hazard communication program standard.

(14) Recordkeeping.

(a) Exposure monitoring.

(i) The employer shall establish and keep an accurate record of all air monitoring for cadmium in the workplace.

(ii) This record shall include at least the following information:

(A) The monitoring date, shift, duration, air volume, and results in terms of an 8-hour TWA of each sample taken, and if cadmium is not detected, the detection level;

(B) The name, Social Security number, and job classification of all employees monitored and of all other employees whose exposures the monitoring result is intended to represent, including, where applicable, a description of how it was determined that the employee's monitoring result could be taken to represent other employee's exposures;

(C) A description of the sampling and analytical methods used and evidence of their accuracy;

(D) The type of respiratory protective device, if any, worn by the monitored employee and by any other employee whose exposure the monitoring result is intended to represent;

(E) A notation of any other conditions that might have affected the monitoring results;

(F) Any exposure monitoring or objective data that were used and the levels.

(iii) The employer shall maintain this record for at least thirty (30) years, in accordance with chapter 296-802 WAC.

(iv) The employer shall also provide a copy of the results of an employee's air monitoring prescribed in subsection (4) of this section to an industry trade association and to the employee's union, if any, or, if either of such associations or unions do not exist, to another comparable organization that is competent to maintain such records and is reasonably accessible to employers and employees in the industry.

(b) Objective data for exemption from requirement for initial monitoring.

(i) For purposes of this section, objective data are information demonstrating that a particular product or material containing cadmium or a specific process, operation, or activity involving cadmium cannot release dust or fumes in concentrations at or above the action level even under the worst-case release conditions. Objective data can be obtained from an industry-wide study or from laboratory product test results from manufacturers of cadmium-containing products or materials. The data the employer uses from an industry-wide survey must be obtained under workplace conditions closely resembling the processes, types of material, control methods, work practices, and environmental conditions in the employer's current operations.

(ii) The employer shall maintain the record for at least 30 years of the objective data relied upon.

(c) Medical surveillance.

(i) The employer shall establish and maintain an accurate record for each employee covered by medical surveillance under (a)(i) of this subsection.

(ii) The record shall include at least the following information about the employee:

(A) Name, Social Security number, and description of duties;

(B) A copy of the physician's written opinions and of the explanation sheets for biological monitoring results;

(C) A copy of the medical history, and the results of any physical examination and all test results that are required to be provided by this section, including biological tests, X rays, pulmonary function tests, etc., or that have been obtained to further evaluate any condition that might be related to cadmium exposure;

(D) The employee's medical symptoms that might be related to exposure to cadmium; and

(E) A copy of the information provided to the physician as required by subsection (12)(i) of this section.

(iii) The employer shall assure that this record is maintained for the duration of employment plus thirty (30) years, in accordance with chapter 296-802 WAC.

(iv) At the employee's request, the employer shall promptly provide a copy of the employee's medical record, or update as appropriate, to a medical doctor or a union specified by the employee.

(d) Training. The employer shall certify that employees have been trained by preparing a certification record which includes the identity of the person trained, the signature of the employer or the person who conducted the training, and the date the training was completed. The certification records shall be prepared at the completion of training and shall be maintained on file for one (1) year beyond the date of training of that employee.

(e) Availability.

(i) Except as otherwise provided for in this section, access to all records required to be maintained by (a) through (d) of this subsection shall be in accordance with the provisions of chapter 296-802 WAC.

(ii) Within 15 days after a request, the employer shall make an employee's medical records required to be kept by (c) of this subsection available for examination and copying to the subject employee, to designated representatives, to anyone having the specific written consent of the subject employee, and after the employee's death or incapacitation, to the employee's family members.

(f) Transfer of records. Whenever an employer ceases to do business and there is no successor employer or designated organization to receive and retain records for the prescribed period, the employer shall comply with the requirements concerning transfer of records set forth in chapter 296-802 WAC.

(15) Observation of monitoring.

(a) Employee observation. The employer shall provide affected employees or their designated representatives an opportunity to observe any monitoring of employee exposure to cadmium.

(b) Observation procedures. When observation of monitoring requires entry into an area where the use of protective clothing or equipment is required, the employer shall provide the observer with that clothing and equipment and shall assure that the observer uses such clothing and equipment and complies with all other applicable safety and health procedures.

(16) Appendices.

(a) Compliance with the fit testing requirements in WAC 296-62-07201 through 296-62-07248, Appendices A-1, A-2 and A-3 of chapter 296-62 WAC, Part E, are mandatory.

(b) Except where portions of WAC 296-62-07441, 296-62-07443, 296-62-07447, 296-62-07449, and 296-62-07451, Appendices A, B, D, E, and F, respectively, to this section are expressly incorporated in requirements of this section, these appendices are purely informational and are not intended to create any additional obligations not otherwise imposed or to detract from any existing obligations.

[Statutory Authority: RCW 49.17.010, 49.17.040, 49.17.050, and 49.17.060. 04-10-026, § 296-155-174, filed 4/27/04, effective 8/1/04. Statutory Authority: RCW 49.17.010, [49.17].040, and [49.17].050. 01-11-038, § 296-155-174, filed 5/9/01, effective 9/1/01; 99-10-071, § 296-155-174, filed 5/4/99, effective 9/1/99. Statutory Authority: Chapter 49.17 RCW. 94-15-096 (Order 94-07), § 296-155-174, filed 7/20/94, effective 9/20/94; 93-21-075 (Order 93-06), § 296-155-174, filed 10/20/93, effective 12/1/93; 93-07-044 (Order 93-01), § 296-155-174, filed 3/13/93, effective 4/27/93.]

WAC 296-155-176 Lead.

[Statutory Authority: Chapter 49.17 RCW. 93-22-054 (Order 93-07), § 296-155-176, filed 10/29/93, effective 12/10/93.]

WAC 296-155-17603 Scope. WAC 296-155-176, Lead, applies to all construction work where an employee may be occupationally exposed to lead. All construction work excluded from coverage in the general industry standard for lead by WAC 296-62-07521 (1)(b) is covered by this standard. Construction work is defined as work for construction, alteration and/or repair, including painting and decorating. It includes but is not limited to the following:

(1) Demolition or salvage of structures where lead or materials containing lead are present;

(2) Removal or encapsulation of materials containing lead;

(3) New construction, alteration, repair, or renovation of structures, substrates, or portions thereof, that contain lead, or materials containing lead;

(4) Installation of products containing lead;

(5) Lead contamination/emergency cleanup;

(6) Transportation, disposal, storage, or containment of lead or materials containing lead on the site or location at which construction activities are performed; and

(7) Maintenance operations associated with the construction activities described in this section.

[Statutory Authority: Chapter 49.17 RCW. 93-22-054 (Order 93-07), § 296-155-17603, filed 10/29/93, effective 12/10/93.]

WAC 296-155-17605 Definitions. (1) Action level means employee exposure, without regard to the use of respirators, to an airborne concentration of lead of 30 micrograms per cubic meter of air (30 $\mu g/m^3$) calculated as an 8-hour time-weighted average (TWA).

(2) Competent person means one who is capable of identifying existing and predictable lead hazards in the surroundings or working conditions and who has authorization to take prompt corrective measures to eliminate them.

(3) Director means the director of labor and industries, or his/her designated representative.

(4) Lead means metallic lead, all inorganic lead compounds, and organic lead soaps. Excluded from this definition are all other organic lead compounds.

(5) This section means WAC 296-155-176 through 296-155-17656.

[Statutory Authority: Chapter 49.17 RCW. 93-22-054 (Order 93-07), § 296-155-17605, filed 10/29/93, effective 12/10/93.]

WAC 296-155-17607 Permissible exposure limit. (1) The employer shall assure that no employee is exposed to lead at concentrations greater than fifty micrograms per cubic meter of air (50 $\mu g/m^3$) averaged over an 8-hour period.

(2) If an employee is exposed to lead for more than 8 hours in any work day the employees' allowable exposure, as a time weighted average (TWA) for that day, shall be reduced according to the following formula:

Allowable employee exposure (in $\mu g/m^3$) = 400 divided by hours worked in the day.

(3) When respirators are used to limit employee exposure as required by this section and all the requirements of WAC 296-155-17611(1) and 296-155-17613 have been met, employee exposure may be considered to be at the level provided by the protection factor of the respirator for those periods the respirator is worn. Those periods may be averaged with exposure levels during periods when respirators are not worn to determine the employee's daily TWA exposure.

[Statutory Authority: Chapter 49.17 RCW. 93-22-054 (Order 93-07), § 296-155-17607, filed 10/29/93, effective 12/10/93.]

WAC 296-155-17609 Exposure assessment. (1) General.

(a) Each employer who has a workplace or operation covered by this standard shall initially determine if any employee may be exposed to lead at or above the action level.

(b) For the purposes of this section, employee exposure is that exposure which would occur if the employee were not using a respirator.

(c) With the exception of monitoring under subsection (3) of this section, where monitoring is required by this standard, the employer shall collect personal samples representative of a full shift including at least one sample for each job classification in each work area either for each shift or for the shift with the highest exposure level.

(d) Full shift personal samples shall be representative of the monitored employee's regular, daily exposure to lead.

(2) Protection of employees during assessment of exposure.

(a) With respect to the lead related tasks listed in this subdivision, where lead is present, until the employer performs an employee exposure assessment as required in this section and documents that the employee performing any of the listed tasks is not exposed above the PEL, the employer shall treat the employee as if the employee were exposed above the PEL, and not in excess of ten (10) times the PEL, and shall implement employee protective measures prescribed in subdivision (e) of this subsection. The tasks covered by this requirement are:

(i) Where lead containing coatings or paint are present: Manual demolition of structures (e.g, dry wall), manual scraping, manual sanding, heat gun applications, and power tool cleaning with dust collection systems;

(ii) Spray painting with lead paint.

(b) In addition, with regard to tasks not listed in subdivision (a), where the employer has any reason to believe that an employee performing the task may be exposed to lead in excess of the PEL, until the employer performs an employee exposure assessment as required by this section and documents that the employee's lead exposure is not above the PEL the employer shall treat the employee as if the employee were exposed above the PEL and shall implement employee protective measures as prescribed in subdivision (e) of this subsection.

(c) With respect to the tasks listed in this subdivision, where lead is present, until the employer performs an employee exposure assessment as required in this section, and documents that the employee performing any of the listed tasks is not exposed in excess of 500 $\mu g/m^3$, the employer shall treat the employee as if the employee were exposed to lead in excess of 500 $\mu g/m^3$ and shall implement employee protective measures as prescribed in subdivision (e) of this subsection. Where the employer does establish that the employee is exposed to levels of lead below 500 $\mu g/m^3$, the employer may provide the exposed employee with the appropriate respirator prescribed for such use at such lower exposures, in accordance with Table 1 of WAC 296-155-17613. The tasks covered by this requirement are:

(i) Using lead containing mortar; lead burning;

(ii) Where lead containing coatings or paint are present: Rivet busting; power tool cleaning without dust collection systems; cleanup activities where dry expendable abrasives are used; and abrasive blasting enclosure movement and removal.

(d) With respect to the tasks listed in this subdivision, where lead is present, until the employer performs an employee exposure assessment as required in this section and documents that the employee performing any of the listed tasks is not exposed to lead in excess of 2,500 $\mu g/m^3$ (50 x PEL), the employer shall treat the employee as if the employee were exposed to lead in excess of 2,500 $\mu g/m^3$ and shall implement employee protective measures as prescribed in (e) of this subsection. Where the employer does establish that the employee is exposed to levels of lead below 2,500 $\mu g/m^3$, the employer may provide the exposed employee with the appropriate respirator prescribed for use at such lower exposures, in accordance with Table I of this WAC 296-155-17613. Protection described in this section is required where lead containing coatings or paint are present on structures when performing:

(i) Abrasive blasting;

(ii) Welding;

(iii) Cutting; and

(iv) Torch burning.

(e) Until the employer performs an employee exposure assessment as required by this section and determines actual employee exposure, the employer shall provide to employees performing the tasks described in (a) through (d) of this subsection with interim protection as follows:

(i) Appropriate respiratory protection in accordance with WAC 296-155-17613.

(ii) Appropriate personal protective clothing and equipment in accordance with WAC 296-155-17615.

(iii) Change areas in accordance with WAC 296-155-17619(2).

(iv) Hand washing facilities in accordance with WAC 296-155-17619(5).

(v) Biological monitoring in accordance with WAC 296-155-17621 (1)(a), to consist of blood sampling and analysis for lead and zinc protoporphyrin levels, and

(vi) Training as required by WAC 296-155-17625 (1)(a) regarding WAC 296-800-170, Chemical hazard communication; training as required by WAC 296-155-17625 (2)(c), regarding use of respirators; and training in accordance with WAC 296-155-100.

(3) Basis of initial determination.

(a) Except as provided by (c) and (d) of this subsection the employer shall monitor employee exposures and shall base initial determinations on the employee exposure monitoring results and any of the following, relevant considerations:

(i) Any information, observations, or calculations which would indicate employee exposure to lead;

(ii) Any previous measurements of airborne lead; and

(iii) Any employee complaints of symptoms which may be attributable to exposure to lead.

(b) Monitoring for the initial determination where performed may be limited to a representative sample of the exposed employees who the employer reasonably believes are exposed to the greatest airborne concentrations of lead in the workplace.

(c) Where the employer has previously monitored for lead exposures, and the data were obtained within the past 12 months during work operations conducted under workplace conditions closely resembling the processes, type of material, control methods, work practices, and environmental conditions used and prevailing in the employer's current operations, the employer may rely on such earlier monitoring results to satisfy the requirements of subdivision (a) of this subsection and subsection (5) of this section if the sampling and analytical methods meet the accuracy and confidence levels of subsection (9) of this section.

(d) Where the employer has objective data, demonstrating that a particular product or material containing lead or a specific process, operation or activity involving lead cannot result in employee exposure to lead at or above the action level during processing, use, or handling, the employer may rely upon such data instead of implementing initial monitoring.

(i) The employer shall establish and maintain an accurate record documenting the nature and relevancy of objective data as specified in WAC 296-155-17629(4), where used in assessing employee exposure in lieu of exposure monitoring.

(ii) Objective data, as described in subdivision (d) of this subsection, is not permitted to be used for exposure assessment in connection with subsection (2) of this section.

(4) Positive initial determination and initial monitoring.

(a) Where a determination conducted under subsections (1), (2) and (3) of this section shows the possibility of any employee exposure at or above the action level the employer shall conduct monitoring which is representative of the exposure for each employee in the workplace who is exposed to lead.

(b) Where the employer has previously monitored for lead exposure, and the data were obtained within the past 12 months during work operations conducted under workplace conditions closely resembling the processes, type of material, control methods, work practices, and environmental conditions used and prevailing in the employer's current operations, the employer may rely on such earlier monitoring results to satisfy the requirements of (a) of this subsection if the sampling and analytical methods meet the accuracy and confidence levels of subsection (9) of this section.

(5) Negative initial determination. Where a determination, conducted under subsections (1), (2), and (3) of this section is made that no employee is exposed to airborne concentrations of lead at or above the action level the employer shall make a written record of such determination. The record shall include at least the information specified in subsection (3)(a) of this section and shall also include the date of determination, location within the worksite, and the name and social security number of each employee monitored.

(6) Frequency.

(a) If the initial determination reveals employee exposure to be below the action level further exposure determination need not be repeated except as otherwise provided in subsection (7) of this section.

(b) If the initial determination or subsequent determination reveals employee exposure to be at or above the action level but at or below the PEL the employer shall perform monitoring in accordance with this section at least every 6 months. The employer shall continue monitoring at the required frequency until at least two consecutive measurements, taken at least 7 days apart, are below the action level at which time the employer may discontinue monitoring for that employee except as otherwise provided in subsection (7) of this section.

(c) If the initial determination reveals that employee exposure is above the PEL the employer shall perform monitoring quarterly. The employer shall continue monitoring at the required frequency until at least two consecutive measurements, taken at least 7 days apart, are at or below the PEL but at or above the action level at which time the employer shall repeat monitoring for that employee at the frequency specified in subdivision (b) of this subsection, except as otherwise provided in subsection (7) of this section. The employer shall continue monitoring at the required frequency until at least two consecutive measurements, taken at least 7 days apart, are below the action level at which time the employer may discontinue monitoring for that employee except as otherwise provided in subsection (7) of this section.

(7) Additional exposure assessments. Whenever there has been a change of equipment, process, control, personnel or a new task has been initiated that may result in additional employees being exposed to lead at or above the action level or may result in employees already exposed at or above the action level being exposed above the PEL, the employer shall conduct additional monitoring in accordance with this section.

(8) Employee notification.

(a) Within 5 working days after completion of the exposure assessment the employer shall notify each employee in

writing of the results which represent that employee's exposure.

(b) Whenever the results indicate that the representative employee exposure, without regard to respirators, is at or above the PEL the employer shall include in the written notice a statement that the employees exposure was at or above that level and a description of the corrective action taken or to be taken to reduce exposure to below that level.

(9) Accuracy of measurement. The employer shall use a method of monitoring and analysis which has an accuracy (to a confidence level of 95 percent) of not less than plus or minus 25 percent for airborne concentrations of lead equal to or greater than 30 $\mu g/m^3$.

[Statutory Authority: RCW 49.17.010, [49.17].040, and [49.17].050. 01-11-038, § 296-155-17609, filed 5/9/01, effective 9/1/01. Statutory Authority: Chapter 49.17 RCW. 93-22-054 (Order 93-07), § 296-155-17609, filed 10/29/93, effective 12/10/93.]

WAC 296-155-17611 Methods of compliance. (1) Engineering and work practice controls. The employer shall implement engineering and work practice controls, including administrative controls, to reduce and maintain employee exposure to lead to or below the permissible exposure limit to the extent that such controls are feasible. Wherever all feasible engineering and work practices controls that can be instituted are not sufficient to reduce employee exposure to or below the permissible exposure limit prescribed in WAC 296-155-17607, the employer shall nonetheless use them to reduce employee exposure to the lowest feasible level and shall supplement them by the use of respiratory protection that complies with the requirements of WAC 296-155-17613.

(2) Compliance program.

(a) Prior to commencement of the job each employer shall establish and implement a written compliance program to achieve compliance with WAC 296-155-17607.

(b) Written plans for these compliance programs shall include at least the following:

(i) A description of each activity in which lead is emitted; e.g., equipment used, material involved, controls in place, crew size, employee job responsibilities, operating procedures and maintenance practices;

(ii) A description of the specific means that will be employed to achieve compliance and, where engineering controls are required engineering plans and studies used to determine methods selected for controlling exposure to lead;

(iii) A report of the technology considered in meeting the PEL;

(iv) Air monitoring data which documents the source of lead emissions;

(v) A detailed schedule for implementation of the program, including documentation such as copies of purchase orders for equipment, construction contracts, etc.;

(vi) A work practice program which includes under requirements in WAC 296-155-17615, 296-155-17617, and 296-155-17619, and incorporates other relevant work practices such as those specified in subsection (5) of this section;

(vii) An administrative control schedule required by subsection (4) of this section, if applicable;

(viii) Other relevant information.

(c) The compliance program shall provide for frequent and regular inspections of job sites, materials, and equipment to be made by a competent person.

(d) Written programs shall be submitted upon request to any affected employee or authorized employee representatives, and the director, and shall be available at the worksite for examination and copying by the director.

(e) Written programs shall be revised and updated at least every 6 months to reflect the current status of the program.

(3) Mechanical ventilation. When ventilation is used to control lead exposure, the employer shall evaluate the mechanical performance of the system in controlling exposure as necessary to maintain its effectiveness.

(4) Administrative controls. If administrative controls are used as a means of reducing employees TWA exposure to lead, the employer shall establish and implement a job rotation schedule which includes:

(a) Name or identification number of each affected employee;

(b) Duration and exposure levels at each job or work station where each affected employee is located; and

(c) Any other information which may be useful in assessing the reliability of administrative controls to reduce exposure to lead.

(5) The employer shall ensure that, to the extent relevant, employees follow good work practices such as described in Appendix B, WAC 296-155-17652.

[Statutory Authority: Chapter 49.17 RCW. 93-22-054 (Order 93-07), § 296-155-17611, filed 10/29/93, effective 12/10/93.]

WAC 296-155-17613 Respiratory protection. (1) General. For employees who use respirators required by WAC 296-155-176, the employer must provide respirators that comply with the requirements of this section. Respirators must be used during:

(a) Periods when an employee's exposure to lead exceeds the PEL.

(b) Work operations for which engineering controls and work-practices are not sufficient to reduce employee exposures to or below the PEL.

(c) Periods when an employee requests a respirator.

(d) Periods when respirators are required to provide interim protection of employees while they perform the operations as specified in WAC 296-155-17609(2).

(2) Respirator program.

(a) The employer must implement a respiratory protection program as required by chapter 296-62 WAC, Part E (except WAC 296-62-07130(1) and 296-62-07150 through 296-62-07156).

(b) If an employee has breathing difficulty during fit testing or respirator use, the employer must provide the employee with a medical examination as required by WAC 296-155-17621 (3)(a)(ii) to determine whether or not the employee can use a respirator while performing the required duty.

(3) Respirator selection.

(a) The employer must select the appropriate respirator or combination of respirators from Table I of this section.

(b) The employer must provide a powered air-purifying respirator when an employee chooses to use such a respirator and it will provide adequate protection to the employee.

Table I.— Respiratory Protection for Lead Aerosols

Airborne concentration of lead or condition of use	Required respirator [a]
Not in excess of 500 μg/m^3	1/2 mask air purifying respirator with high efficiency filters.[b], [c] 1/2 mask supplied air respirator operated in demand (negative pressure) mode.
Not in excess of 1,250 μg/m^3	Loose fitting hood or helmet powered air purifying respirator with high efficiency filters.[c] Hood or helmet supplied air respirator operated in a continuous-flow mode—e.g., type CE abrasive blasting respirators operated in a continuous-flow mode.
Not in excess of 2,500 μg/m^3	Full facepiece air purifying respirator with high efficiency filters.[c] Tight fitting powered air purifying respirator with high efficiency filters.[c] Full facepiece supplied air respirator operated in demand mode. 1/2 mask or full facepiece supplied air respirator operated in a continuous-flow mode. Full facepiece self-contained breathing apparatus (SCBA) operated in demand mode.
Not in excess of 50,000 μg/m^3	1/2 mask supplied air respirator operated in pressure demand or other positive-pressure mode.
Not in excess of 100,000 μg/m	Full facepiece supplied air respirator operated in pressure demand or other positive-pressure mode—e.g., type CE abrasive blasting respirators operated in a positive-pressure mode.
Greater than 100,000 μg/m^3 unknown concentration, or fire fighting	Full facepiece SCBA operated in pressure demand or other positive pressure mode.

[a] Respirators specified for higher concentrations can be used at lower concentrations of lead.

[b] Full facepiece is required if the lead aerosols cause eye or skin irritation at the use concentrations.

[c] A high efficiency particulate filter (HEPA) means a filter that is 99.97 percent efficient against particles of 0.3 micron size or larger.

[Statutory Authority: RCW 49.17.010, [49.17].040 and [49.17].050. 99-10-071, § 296-155-17613, filed 5/4/99, effective 9/1/99. Statutory Authority: Chapter 49.17 RCW. 93-22-054 (Order 93-07), § 296-155-17613, filed 10/29/93, effective 12/10/93.]

WAC 296-155-17615 Protective work clothing and equipment. (1) Provision and use. Where an employee is exposed to lead above the PEL without regard to the use of respirators, where employees are exposed to lead compounds which may cause skin or eye irritation (e.g., lead arsenate, lead azide), and as protection for employees performing tasks as specified in WAC 296-155-17609(2), the employer shall provide at no cost to the employee and assure that the employee uses appropriate protective work clothing and equipment that prevents contamination of the employee and the employee's garments such as, but not limited to:

(a) Coveralls or similar full-body work clothing;

(b) Gloves, hats, and shoes or disposable shoe coverlets; and

(c) Face shields, vented goggles, or other appropriate protective equipment which complies with WAC 296-800-160.

(2) Cleaning and replacement.

(a) The employer shall provide the protective clothing required in subsection (1) of this section in a clean and dry condition at least weekly, and daily to employees whose exposure levels without regard to a respirator are over 200 μg/m^3 of lead as an 8-hour TWA.

(b) The employer shall provide for the cleaning, laundering, and disposal of protective clothing and equipment required by subsection (1) of this section.

(c) The employer shall repair or replace required protective clothing and equipment as needed to maintain their effectiveness.

(d) The employer shall assure that all protective clothing is removed at the completion of a work shift only in change areas provided for that purpose as prescribed in WAC 296-155-17619(2).

(e) The employer shall assure that contaminated protective clothing which is to be cleaned, laundered, or disposed of, is placed in a closed container in the change area which prevents dispersion of lead outside the container.

(f) The employer shall inform in writing any person who cleans or launders protective clothing or equipment of the potentially harmful effects of exposure to lead.

(g) The employer shall assure that the containers of contaminated protective clothing and equipment required by subdivision (e) of this subsection are labeled as follows:

Caution: Clothing contaminated with lead. Do not remove dust by blowing or shaking. Dispose of lead contaminated wash water in accordance with applicable local, state, or federal regulations.

(h) The employer shall prohibit the removal of lead from protective clothing or equipment by blowing, shaking, or any other means which disperses lead into the air.

[Statutory Authority: RCW 49.17.010, [49.17].040, and [49.17].050. 01-11-038, § 296-155-17615, filed 5/9/01, effective 9/1/01. Statutory Authority: Chapter 49.17 RCW. 93-22-054 (Order 93-07), § 296-155-17615, filed 10/29/93, effective 12/10/93.]

WAC 296-155-17617 Housekeeping. (1) All surfaces shall be maintained as free as practicable of accumulations of lead.

(2) Clean-up of floors and other surfaces where lead accumulates shall wherever possible, be cleaned by vacuuming or other methods that minimize the likelihood of lead becoming airborne.

(3) Shoveling, dry or wet sweeping, and brushing may be used only where vacuuming or other equally effective methods have been tried and found not to be effective.

(4) Where vacuuming methods are selected, the vacuums shall be equipped with HEPA filters and used and emptied in a manner which minimizes the reentry of lead into the workplace.

(5) Compressed air shall not be used to remove lead from any surface unless the compressed air is used in conjunction with a ventilation system designed to capture the airborne dust created by the compressed air.

[Statutory Authority: Chapter 49.17 RCW. 93-22-054 (Order 93-07), § 296-155-17617, filed 10/29/93, effective 12/10/93.]

WAC 296-155-17619 Hygiene facilities and practices. (1) The employer shall assure that in areas where employees are exposed to lead above the PEL without regard to the use of respirators, food or beverage is not present or consumed, tobacco products are not present or used, and cosmetics are not applied.

(2) Change areas.

(a) The employer shall provide clean change areas for employees whose airborne exposure to lead is above the PEL, and as protection for employees performing tasks as specified in WAC 296-155-17609(2), without regard to the use of respirators.

(b) The employer shall assure that change areas are equipped with separate storage facilities for protective work clothing and equipment and for street clothes which prevent cross-contamination.

(c) The employer shall assure that employees do not leave the workplace wearing any protective clothing or equipment that is required to be worn during the work shift.

(3) Showers.

(a) The employer shall provide shower facilities, where feasible, for use by employees whose airborne exposure to lead is above the PEL.

(b) The employer shall assure, where shower facilities are available, that employees shower at the end of the work shift and shall provide an adequate supply of cleansing agents and towels for use by affected employees.

(4) Eating facilities.

(a) The employer shall provide lunchroom facilities or eating areas for employees whose airborne exposure to lead is above the PEL, without regard to the use of respirators.

(b) The employer shall assure that lunchroom facilities or eating areas are as free as practicable from lead contamination and are readily accessible to employees.

(c) The employer shall assure that employees whose airborne exposure to lead is above the PEL, without regard to the use of a respirator, wash their hands and face prior to eating, drinking, smoking or applying cosmetics.

(d) The employer shall assure that employees do not enter lunchroom facilities or eating areas with protective work clothing or equipment unless surface lead dust has been removed by vacuuming, downdraft booth, or other cleaning method that limits dispersion of lead dust.

(5) Hand washing facilities.

(a) The employer shall provide adequate handwashing facilities for use by employees exposed to lead in accordance with WAC 296-155-140.

(b) Where showers are not provided the employer shall assure that employees wash their hands and face at the end of the work-shift.

[Statutory Authority: Chapter 49.17 RCW. 93-22-054 (Order 93-07), § 296-155-17619, filed 10/29/93, effective 12/10/93.]

WAC 296-155-17621 Medical surveillance. (1) General.

(a) The employer shall make available initial medical surveillance to employees occupationally exposed on any day to lead at or above the action level. Initial medical surveillance consists of biological monitoring in the form of blood sampling and analysis for lead and zinc protoporphyrin levels.

(b) The employer shall institute a medical surveillance program in accordance with subsections (2) and (3) of this section for all employees who are or may be exposed by the employer at or above the action level for more than 30 days in any consecutive 12 months;

(c) The employer shall assure that all medical examinations and procedures are performed by or under the supervision of a licensed physician.

(d) The employer shall make available the required medical surveillance including multiple physician review under subsection (3)(c) without cost to employees and at a reasonable time and place.

(2) Biological monitoring.

(a) Blood lead and ZPP level sampling and analysis. The employer shall make available biological monitoring in the form of blood sampling and analysis for lead and zinc protoporphyrin levels to each employee covered by subsection (1)(a) and (b) of this section on the following schedule:

(i) For each employee covered by subsection (1)(b) of this section, at least every 2 months for the first 6 months and every 6 months thereafter;

(ii) For each employee covered by subsection (1)(a) or (b) of this section whose last blood sampling and analysis indicated a blood lead level at or above 40 μg/dl, at least every two months. This frequency shall continue until two consecutive blood samples and analyses indicate a blood lead level below 40 μg/dl; and

(iii) For each employee who is removed from exposure to lead due to an elevated blood lead level at least monthly during the removal period.

(b) Follow-up blood sampling tests. Whenever the results of a blood lead level test indicate that an employee's blood lead level exceeds the numerical criterion for medical removal under WAC 296-155-17623 (1)(a), the employer shall provide a second (follow-up) blood sampling test within two weeks after the employer receives the results of the first blood sampling test.

(c) Accuracy of blood lead level sampling and analysis. Blood lead level sampling and analysis provided pursuant to this WAC 296-155-176 shall have an accuracy (to a confidence level of 95 percent) within plus or minus 15 percent or 6 μg/dl, whichever is greater, and shall be conducted by a laboratory approved by OSHA.

(d) Employee notification.

(i) Within five working days after the receipt of biological monitoring results, the employer shall notify each employee in writing of their blood lead level; and

(ii) The employer shall notify each employee whose blood lead level exceeds 40 μg/dl that the standard requires temporary medical removal with Medical Removal Protection benefits when an employee's blood lead level exceeds the numerical criterion for medical removal under WAC 296-155-17623 (1)(a).

(3) Medical examinations and consultations.

(a) Frequency. The employer shall make available medical examinations and consultations to each employee covered by subsection (1)(b) of this section on the following schedule:

(i) At least annually for each employee for whom a blood sampling test conducted at any time during the preceding 12 months indicated a blood lead level at or above 40 μg/dl;

(ii) As soon as possible, upon notification by an employee either that the employee has developed signs or symptoms commonly associated with lead intoxication, that the employee desires medical advice concerning the effects of current or past exposure to lead on the employee's ability to procreate a healthy child, that the employee is pregnant, or that the employee has demonstrated difficulty in breathing during a respirator fitting test or during use; and

(iii) As medically appropriate for each employee either removed from exposure to lead due to a risk of sustaining material impairment to health, or otherwise limited pursuant to a final medical determination.

(b) Content. The content of medical examinations made available pursuant to subdivision (a)(ii) and (iii) of this subsection shall be determined by an examining physician and, if requested by an employee, shall include pregnancy testing or laboratory evaluation of male fertility. Medical examinations made available pursuant to subdivision (a)(i) of this subsection shall include the following elements:

(i) A detailed work history and a medical history, with particular attention to past lead exposure (occupational and non-occupational), personal habits (smoking, hygiene), and past gastrointestinal, hematologic, renal, cardiovascular, reproductive and neurological problems;

(ii) A thorough physical examination, with particular attention to teeth, gums, hematologic, gastrointestinal, renal, cardiovascular, and neurological systems. Pulmonary status should be evaluated if respiratory protection will be used;

(iii) A blood pressure measurement;

(iv) A blood sample and analysis which determines:

(A) Blood lead level;

(B) Hemoglobin and hematocrit determinations, red cell indices, and examination of peripheral smear morphology;

(C) Zinc protoporphyrin;

(D) Blood urea nitrogen; and,

(E) Serum creatinine;

(v) A routine urinalysis with microscopic examination; and

(vi) Any laboratory or other test relevant to lead exposure which the examining physician deems necessary by sound medical practice.

(c) Multiple physician review mechanism.

(i) If the employer selects the initial physician who conducts any medical examination or consultation provided to an employee by WAC 296-155-176, the employee may designate a second physician:

(A) To review any findings, determinations or recommendations of the initial physician; and

(B) To conduct such examinations, consultations, and laboratory tests as the second physician deems necessary to facilitate this review.

(ii) The employer shall promptly notify an employee of the right to seek a second medical opinion after each occasion that an initial physician conducts a medical examination or consultation pursuant to WAC 296-155-176. The employer may condition its participation in, and payment for, the multiple physician review mechanism upon the employee doing the following within fifteen days after receipt of the foregoing notification, or receipt of the initial physician's written opinion, whichever is later:

(A) The employee informing the employer that they intend to seek a second medical opinion; and

(B) The employee initiating steps to make an appointment with a second physician.

(iii) If the findings, determinations or recommendations of the second physician differ from those of the initial physician, then the employer and the employee shall assure that efforts are made for the two physicians to resolve any disagreement.

(iv) If the two physicians have been unable to quickly resolve their disagreement, then the employer and the employee through their respective physicians shall designate a third physician:

(A) To review any findings, determinations or recommendations of the prior physicians; and

(B) To conduct such examinations, consultations, laboratory tests and discussions with the prior physicians as the third physician deems necessary to resolve the disagreement of the prior physicians.

(v) The employer shall act consistent with the findings, determinations and recommendations of the third physician, unless the employer and the employee reach an agreement which is otherwise consistent with the recommendations of at least one of the three physicians.

(d) Information provided to examining and consulting physicians.

(i) The employer shall provide an initial physician conducting a medical examination or consultation under WAC 296-155-176 with the following information:

(A) A copy of this regulation for lead including all Appendices;

(B) A description of the affected employee's duties as they relate to the employee's exposure;

(C) The employee's exposure level or anticipated exposure level to lead and to any other toxic substance (if applicable);

(D) A description of any personal protective equipment used or to be used;

(E) Prior blood lead determinations; and

(F) All prior written medical opinions concerning the employee in the employer's possession or control.

(ii) The employer shall provide the foregoing information to a second or third physician conducting a medical examination or consultation under WAC 296-155-176 upon request either by the second or third physician, or by the employee.

(e) Written medical opinions.

(i) The employer shall obtain and furnish the employee with a copy of a written medical opinion from each examining or consulting physician which contains only the following information:

(A) The physician's opinion as to whether the employee has any detected medical condition which would place the employee at increased risk of material impairment of the employee's health from exposure to lead;

(B) Any recommended special protective measures to be provided to the employee, or limitations to be placed upon the employee's exposure to lead;

(C) Any recommended limitation upon the employee's use of respirators, including a determination of whether the employee can wear a powered air purifying respirator if a physician determines that the employee cannot wear a negative pressure respirator; and

(D) The results of the blood lead determinations.

(ii) The employer shall instruct each examining and consulting physician to:

(A) Not reveal either in the written opinion or orally, or in any other means of communication with the employer, findings, including laboratory results, or diagnoses unrelated to an employee's occupational exposure to lead; and

(B) Advise the employee of any medical condition, occupational or nonoccupational, which dictates further medical examination or treatment.

(f) Alternate physician determination mechanisms. The employer and an employee or authorized employee representative may agree upon the use of any alternate physician determination mechanism in lieu of the multiple physician review mechanism provided by subdivision (c) of this subsection so long as the alternate mechanism is as expeditious and protective as the requirements contained in this section.

(4) Chelation.

(a) The employer shall assure that any person whom he retains, employs, supervises or controls does not engage in prophylactic chelation of any employee at any time.

(b) If therapeutic or diagnostic chelation is to be performed by any person in subdivision (a) of this subsection, the employer shall assure that it be done under the supervision of a licensed physician in a clinical setting with thorough and appropriate medical monitoring and that the employee is notified in writing prior to its occurrence.

[Statutory Authority: Chapter 49.17 RCW. 93-22-054 (Order 93-07), § 296-155-17621, filed 10/29/93, effective 12/10/93.]

WAC 296-155-17623 Medical removal protection. (1) Temporary medical removal and return of an employee.

(a) Temporary removal due to elevated blood lead level. The employer shall remove an employee from work having an exposure to lead at or above the action level on each occasion that a periodic and a follow-up blood sampling test conducted pursuant to WAC 296-155-176 indicate that the employee's blood lead level is at or above 50 μg/dl; and

(b) Temporary removal due to a final medical determination.

(i) The employer shall remove an employee from work having an exposure to lead at or above the action level on each occasion that a final medical determination results in a medical finding, determination, or opinion that the employee has a detected medical condition which places the employee at increased risk of material impairment to health from exposure to lead.

(ii) For the purposes of WAC 296-155-176, the phrase "final medical determination" means the written medical opinion on the employees' health status by the examining physician or, where relevant, the outcome of the multiple physician review mechanism or alternate medical determination mechanism used pursuant to the medical surveillance provisions of WAC 296-155-176.

(iii) Where a final medical determination results in any recommended special protective measures for an employee, or limitations on an employee's exposure to lead, the employer shall implement and act consistent with the recommendation.

(c) Return of the employee to former job status.

(i) The employer shall return an employee to their former job status:

(A) For an employee removed due to a blood lead level at or above 50 μg/dl when two consecutive blood sampling tests indicate that the employee's blood lead level is at or below 40 μg/dl;

(B) For an employee removed due to a final medical determination, when a subsequent final medical determination results in a medical finding, determination, or opinion that the employee no longer has a detected medical condition which places the employee at increased risk of material impairment to health from exposure to lead.

(ii) For the purposes of WAC 296-155-176, the requirement that an employer return an employee to their former job status is not intended to expand upon or restrict any rights an employee has or would have had, absent temporary medical removal, to a specific job classification or position under the terms of a collective bargaining agreement.

(d) Removal of other employee special protective measure or limitations. The employer shall remove any limitations placed on an employee or end any special protective measures provided to an employee pursuant to a final medical determination when a subsequent final medical determination indicates that the limitations or special protective measures are no longer necessary.

(e) Employer options pending a final medical determination. Where the multiple physician review mechanism, or alternate medical determination mechanism used pursuant to the medical surveillance provisions of WAC 296-155-176, has not yet resulted in a final medical determination with respect to an employee, the employer shall act as follows:

(i) Removal. The employer may remove the employee from exposure to lead, provide special protective measures to the employee, or place limitations upon the employee, consistent with the medical findings, determinations, or recommendations of any of the physicians who have reviewed the employee's health status.

(ii) Return. The employer may return the employee to their former job status, end any special protective measures provided to the employee, and remove any limitations placed upon the employee, consistent with the medical findings, determinations, or recommendations of any of the physicians who have reviewed the employee's health status, with two exceptions.

(A) If the initial removal, special protection, or limitation of the employee resulted from a final medical determination which differed from the findings, determinations, or recommendations of the initial physician or;

(B) If the employee has been on removal status for the preceding eighteen months due to an elevated blood lead level, then the employer shall await a final medical determination.

(2) Medical removal protection benefits.

(a) Provision of medical removal protection benefits. The employer shall provide an employee up to eighteen (18) months of medical removal protection benefits on each occasion that an employee is removed from exposure to lead or otherwise limited pursuant to WAC 296-155-176.

(b) Definition of medical removal protection benefits. For the purposes of WAC 296-155-176, the requirement that an employer provide medical removal protection benefits means that, as long as the job the employee was removed from continues, the employer shall maintain the total normal earnings, seniority and other employment rights and benefits of an employee, including the employee's right to their former job status as though the employee had not been medically removed from the employee's job or otherwise medically limited.

(c) Follow-up medical surveillance during the period of employee removal or limitation. During the period of time that an employee is medically removed from their job or otherwise medically limited, the employer may condition the provision of medical removal protection benefits upon the employee's participation in follow-up medical surveillance made available pursuant to WAC 296-155-176.

(d) Workers' compensation claims. If a removed employee files a claim for workers' compensation payments for a lead-related disability, then the employer shall continue to provide medical removal protection benefits pending disposition of the claim. To the extent that an award is made to the employee for earnings lost during the period of removal, the employer's medical removal protection obligation shall be reduced by such amount. The employer shall receive no credit for workers' compensation payments received by the employee for treatment-related expenses.

(e) Other credits. The employer's obligation to provide medical removal protection benefits to a removed employee shall be reduced to the extent that the employee receives compensation for earnings lost during the period of removal either from a publicly or employer-funded compensation program, or receives income from employment with another employer made possible by virtue of the employee's removal.

(f) Voluntary removal or restriction of an employee. Where an employer, although not required by WAC 296-155-176 to do so, removes an employee from exposure to lead or otherwise places limitations on an employee due to the effects of lead exposure on the employee's medical condition, the employer shall provide medical removal protection benefits to the employee equal to that required by subdivisions (a) and (b) of this subsection.

[Statutory Authority: Chapter 49.17 RCW. 93-22-054 (Order 93-07), § 296-155-17623, filed 10/29/93, effective 12/10/93.]

WAC 296-155-17625 Employee information and training. (1) General.

(a) The employer shall communicate information concerning lead hazards according to the requirements of WISHA's Hazard Communication Standard for the construction industry, chapter 296-800 WAC, including but not limited to the requirements concerning warning signs and labels, material safety data sheets (MSDS), and employee information and training. In addition, employers shall comply with the following requirements:

(b) For all employees who are subject to exposure to lead at or above the action level on any day or who are subject to exposure to lead compounds which may cause skin or eye irritation (e.g., lead arsenate, lead azide), the employer shall provide a training program in accordance with subsection (2) of this section and assure employee participation.

(c) The employer shall provide the training program as initial training prior to the time of job assignment or prior to the start up date for this requirement, whichever comes last.

(d) The employer shall also provide the training program at least annually for each employee who is subject to lead exposure at or above the action level on any day.

(2) Training program. The employer shall assure that each employee is trained in the following:

(a) The content of this standard and its appendices;

(b) The specific nature of the operations which could result in exposure to lead above the action level;

(c) The training requirements for respiratory protection as required by chapter 296-62 WAC, Part E (see WAC 296-62-07117, 296-62-07172, and WAC 296-62-07186 through 296-62-07190);

(d) The purpose and a description of the medical surveillance program, and the medical removal protection program including information concerning the adverse health effects associated with excessive exposure to lead (with particular attention to the adverse reproductive effects on both males and females and hazards to the fetus and additional precautions for employees who are pregnant);

(e) The engineering controls and work practices associated with the employee's job assignment including training of employees to follow relevant good work practices described in Appendix B, WAC 296-155-17652;

(f) The contents of any compliance plan in effect;

(g) Instructions to employees that chelating agents should not routinely be used to remove lead from their bodies and should not be used at all except under the direction of a licensed physician; and

(h) The employee's right of access to records under Part B, chapter 296-62 WAC and chapter 296-800 WAC.

(3) Access to information and training materials.

(a) The employer shall make readily available to all affected employees a copy of this standard and its appendices.

(b) The employer shall provide, upon request, all materials relating to the employee information and training program to affected employees and their designated representatives, and the director.

[Statutory Authority: RCW 49.17.010, [49.17].040, and [49.17].050. 01-11-038, § 296-155-17625, filed 5/9/01, effective 9/1/01; 99-10-071, § 296-155-17625, filed 5/4/99, effective 9/1/99. Statutory Authority: Chapter 49.17 RCW. 93-22-054 (Order 93-07), § 296-155-17625, filed 10/29/93, effective 12/10/93.]

WAC 296-155-17627 Signs. (1) General.

(a) The employer may use signs required by other statutes, regulations or ordinances in addition to, or in combination with, signs required by this section.

(b) The employer shall assure that no statement appears on or near any sign required by this section which contradicts or detracts from the meaning of the required sign.

(2) Signs.

(a) The employer shall post the following warning signs in each work area where an employees exposure to lead is above the PEL.

WARNING
LEAD WORK AREA
POISON
NO SMOKING OR EATING

(b) The employer shall assure that signs required by this section are illuminated and cleaned as necessary so that the legend is readily visible.

[Statutory Authority: Chapter 49.17 RCW. 93-22-054 (Order 93-07), § 296-155-17627, filed 10/29/93, effective 12/10/93.]

WAC 296-155-17629 Recordkeeping. (1) Exposure assessment.

(a) The employer shall establish and maintain an accurate record of all monitoring and other data used in conducting employee exposure assessments as required in WAC 296-155-17609.

(b) Exposure monitoring records shall include:

(i) The date(s), number, duration, location and results of each of the samples taken if any, including a description of the sampling procedure used to determine representative employee exposure where applicable;

(ii) A description of the sampling and analytical methods used and evidence of their accuracy;

(iii) The type of respiratory protective devices worn, if any;

(iv) Name, social security number, and job classification of the employee monitored and of all other employees whose exposure the measurement is intended to represent; and

(v) The environmental variables that could affect the measurement of employee exposure.

(c) The employer shall maintain monitoring and other exposure assessment records in accordance with the provisions of part B, chapter 296-62 WAC.

(2) Medical surveillance.

(a) The employer shall establish and maintain an accurate record for each employee subject to medical surveillance as required by WAC 296-155-17621.

(b) This record shall include:

(i) The name, Social Security number, and description of the duties of the employee;

(ii) A copy of the physician's written opinions;

(iii) Results of any airborne exposure monitoring done on or for that employee and provided to the physician; and

(iv) Any employee medical complaints related to exposure to lead.

(c) The employer shall keep, or assure that the examining physician keeps, the following medical records:

(i) A copy of the medical examination results including medical and work history required by WAC 296-155-17621;

(ii) A description of the laboratory procedures and a copy of any standards or guidelines used to interpret the test results or references to that information;

(iii) A copy of the results of biological monitoring.

(d) The employer shall maintain or assure that the physician maintains medical records in accordance with the provisions of part B, chapter 296-62 WAC.

(3) Medical removals.

(a) The employer shall establish and maintain an accurate record for each employee removed from current exposure to lead pursuant to WAC 296-155-17623.

(b) Each record shall include:

(i) The name and social security number of the employee;

(ii) The date of each occasion that the employee was removed from current exposure to lead as well as the corresponding date on which the employee was returned to their former job status;

(iii) A brief explanation of how each removal was or is being accomplished; and

(iv) A statement with respect to each removal indicating whether or not the reason for the removal was an elevated blood lead level.

(c) The employer shall maintain each medical removal record for at least the duration of an employee's employment.

(4) Objective data for exemption from requirement for initial monitoring.

(a) For purposes of WAC 296-155-176, objective data are information demonstrating that a particular product or material containing lead or a specific process, operation, or activity involving lead cannot release dust or fumes in concentrations at or above the action level under any expected conditions of use. Objective data can be obtained from an industry-wide study or from laboratory product test results from manufacturers of lead containing products or materials. The data the employer uses from an industry-wide survey must be obtained under workplace conditions closely resembling the processes, types of material, control methods, work practices and environmental conditions in the employer's current operations.

(b) The employer shall maintain the record of the objective data relied upon for at least 30 years.

(5) Availability. The employer shall make available upon request all records required to be maintained by this section to affected employees, former employees, and their designated representatives, and to the director for examination and copying.

(6) Transfer of records.

(a) Whenever the employer ceases to do business, the successor employer shall receive and retain all records required to be maintained by this section.

(b) Whenever the employer ceases to do business and there is no successor employer to receive and retain the records required to be maintained by WAC 296-155-176 for the prescribed period, these records shall be transmitted to the director.

(c) At the expiration of the retention period for the records required to be maintained by WAC 296-155-176, the employer shall notify the director at least 3 months prior to the disposal of such records and shall transmit those records to the director if requested within the period.

(d) The employer shall also comply with any additional requirements involving transfer of records set forth in WAC 296-62-05215.

[Statutory Authority: Chapter 49.17 RCW. 93-22-054 (Order 93-07), § 296-155-17629, filed 10/29/93, effective 12/10/93.]

WAC 296-155-17631 Observation of monitoring. (1) Employee observation. The employer shall provide affected employees or their designated representatives an opportunity to observe any monitoring of employee exposure to lead conducted pursuant to WAC 296-155-17609.

(2) Observation procedures.

(a) Whenever observation of the monitoring of employee exposure to lead requires entry into an area where the use of respirators, protective clothing or equipment is required, the employer shall provide the observer with and assure the use of such respirators, clothing and equipment, and shall require the observer to comply with all other applicable safety and health procedures.

(b) Without interfering with the monitoring, observers shall be entitled to:

(i) Receive an explanation of the measurement procedures;

(ii) Observe all steps related to the monitoring of lead performed at the place of exposure; and

(iii) Record the results obtained or receive copies of the results when returned by the laboratory.

[Statutory Authority: Chapter 49.17 RCW. 93-22-054 (Order 93-07), § 296-155-17631, filed 10/29/93, effective 12/10/93.]

WAC 296-155-17650 Appendix A to WAC 296-155-176—Substance data sheet for occupational exposure to lead. The information contained in the appendices to WAC 296-155-176 is not intended by itself, to create any additional obligations not otherwise imposed by this standard nor detract from any existing obligation.

(1) Substance identification.

(a) Substance: Pure lead (Pb) is a heavy metal at room temperature and pressure and is a basic chemical element. It can combine with various other substances to form numerous lead compounds.

(b) Compounds covered by the standard: The word "lead" when used in this standard means elemental lead, all inorganic lead compounds and a class of organic lead compounds called lead soaps. This standard does not apply to other organic lead compounds.

(c) Uses: Exposure to lead occurs in several different occupations in the construction industry, including demolition or salvage of structures where lead or lead-containing materials are present; removal or encapsulation of lead-containing materials, new construction, alteration, repair, or renovation of structures that contain lead or materials containing lead; installation of products containing lead. In addition, there are construction related activities where exposure to lead may occur, including transportation, disposal, storage, or containment of lead or materials containing lead on construction sites, and maintenance operations associated with construction activities.

(d) Permissible exposure: The permissible exposure limit (PEL) set by the standard is 50 micrograms of lead per cubic meter of air (50 $\mu g/m^3$), averaged over an 8-hour workday.

(e) Action level: The standard establishes an action level of 30 micrograms of lead per cubic meter of air (30 $\mu g/m^3$), averaged over an 8-hour workday. The action level triggers several ancillary provisions of the standard such as exposure monitoring, medical surveillance, and training.

(2) Health hazard data.

(a) Ways in which lead enters your body. When absorbed into your body in certain doses, lead is a toxic substance. The object of the lead standard is to prevent absorption of harmful quantities of lead. The standard is intended to protect you not only from the immediate toxic effects of lead, but also from the serious toxic effects that may not become apparent until years of exposure have passed. Lead can be absorbed into your body by inhalation (breathing) and ingestion (eating). Lead (except for certain organic lead compounds not covered by the standard, such as tetraethyl lead) is not absorbed through your skin. When lead is scattered in the air as a dust, fume respiratory tract. Inhalation of airborne lead is generally the most important source of occupational lead absorption. You can also absorb lead through your digestive system if lead gets into your mouth and is swallowed. If you handle food, cigarettes, chewing tobacco, or make-up which have lead on them or handle them with hands contaminated with lead, this will contribute to ingestion. A significant portion of the lead that you inhale or ingest gets into your blood stream. Once in your blood stream, lead is circulated throughout your body and stored in various organs and body tissues. Some of this lead is quickly filtered out of your body and excreted, but some remains in the blood and other tissues. As exposure to lead continues, the amount stored in your body will increase if you are absorbing more lead than your body is excreting. Even though you may not be aware of any immediate symptoms of disease, this lead stored in your tissues can be slowly causing irreversible damage, first to individual cells, then to your organs and whole body systems.

(b) Effects of overexposure to lead.

(i) Short term (acute) overexposure. Lead is a potent, systemic poison that serves no known useful function once absorbed by your body. Taken in large enough doses, lead can kill you in a matter of days. A condition affecting the brain called acute encephalopathy may arise which develops quickly to seizures, coma, and death from cardiorespiratory arrest. A short term dose of lead can lead to acute encephalopathy. Short term occupational exposures of this magnitude are highly unusual, but not impossible. Similar forms of encephalopathy may, however, arise from extended, chronic exposure to lower doses of lead. There is no sharp dividing line between rapidly developing acute effects of lead, and chronic effects which take longer to acquire. Lead adversely affects numerous body systems, and causes forms of health impairment and disease which arise after periods of exposure as short as days or as long as several years.

(ii) Long-term (chronic) overexposure. Chronic overexposure to lead may result in severe damage to your blood-forming, nervous, urinary and reproductive systems. Some common symptoms of chronic overexposure include loss of appetite, metallic taste in the mouth, anxiety, constipation, nausea, pallor, excessive tiredness, weakness, insomnia, headache, nervous irritability, muscle and joint pain or soreness, fine tremors, numbness, dizziness, hyperactivity and colic. In lead colic there may be severe abdominal pain. Damage to the central nervous system in general and the brain (encephalopathy) in particular is one of the most severe forms of lead poisoning. The most severe, often fatal, form of encephalopathy may be preceded by vomiting, a feeling of dullness progressing to drowsiness and stupor, poor memory,

restlessness, irritability, tremor, and convulsions. It may arise suddenly with the onset of seizures, followed by coma, and death. There is a tendency for muscular weakness to develop at the same time. This weakness may progress to paralysis often observed as a characteristic "wrist drop" or "foot drop" and is a manifestation of a disease to the nervous system called peripheral neuropathy. Chronic overexposure to lead also results in kidney disease with few, if any, symptoms appearing until extensive and most likely permanent kidney damage has occurred. Routine laboratory tests reveal the presence of this kidney disease only after about two-thirds of kidney function is lost. When overt symptoms of urinary dysfunction arise, it is often too late to correct or prevent worsening conditions, and progression to kidney dialysis or death is possible. Chronic overexposure to lead impairs the reproductive systems of both men and women. Overexposure to lead may result in decreased sex drive, impotence and sterility in men. Lead can alter the structure of sperm cells raising the risk of birth defects. There is evidence of miscarriage and stillbirth in women whose husbands were exposed to lead or who were exposed to lead themselves. Lead exposure also may result in decreased fertility, and abnormal menstrual cycles in women. The course of pregnancy may be adversely affected by exposure to lead since lead crosses the placental barrier and poses risks to developing fetuses. Children born of parents either one of whom were exposed to excess lead levels are more likely to have birth defects, mental retardation, behavioral disorders or die during the first year of childhood. Overexposure to lead also disrupts the blood-forming system resulting in decreased hemoglobin (the substance in the blood that carries oxygen to the cells) and ultimately anemia. Anemia is characterized by weakness, pallor and fatigability as a result of decreased oxygen carrying capacity in the blood.

(iii) Health protection goals of the standard. Prevention of adverse health effects for most workers from exposure to lead throughout a working lifetime requires that a worker's blood lead level (BLL, also expressed as PbB) be maintained at or below forty micrograms per deciliter of whole blood (40 μg/dl). The blood lead levels of workers (both male and female workers) who intend to have children should be maintained below 30 μg/dl to minimize adverse reproductive health effects to the parents and to the developing fetus. The measurement of your blood lead level (BLL) is the most useful indicator of the amount of lead being absorbed by your body. Blood lead levels are most often reported in units of milligrams (mg) or micrograms (μg) of lead (1 mg = 1000 μg) per 100 grams (100g), 100 milliliters (100 ml) or deciliter (dl) of blood. These three units are essentially the same. Sometime BLLs are expressed in the form of mg% or μg%. This is a shorthand notation for 100g, 100 ml, or dl. (References to BLL measurements in this standard are expressed in the form of μg/dl.)

BLL measurements show the amount of lead circulating in your blood stream, but do not give any information about the amount of lead stored in your various tissues. BLL measurements merely show current absorption of lead, not the effect that lead is having on your body or the effects that past lead exposure may have already caused. Past research into lead-related diseases, however, has focused heavily on associations between BLLs and various diseases. As a result, your BLL is an important indicator of the likelihood that you will gradually acquire a lead-related health impairment or disease.

Once your blood lead level climbs above 40 μg/dl, your risk of disease increases. There is a wide variability of individual response to lead, thus it is difficult to say that a particular BLL in a given person will cause a particular effect. Studies have associated fatal encephalopathy with BLLs as low as 150 μg/dl. Other studies have shown other forms of diseases in some workers with BLLs well below 80 μg/dl. Your BLL is a crucial indicator of the risks to your health, but one other factor is also extremely important. This factor is the length of time you have had elevated BLLs. The longer you have an elevated BLL, the greater the risk that large quantities of lead are being gradually stored in your organs and tissues (body burden). The greater your overall body burden, the greater the chances of substantial permanent damage. The best way to prevent all forms of lead-related impairments and diseases—both short term and long term—is to maintain your BLL below 40 μg/dl. The provisions of the standard are designed with this end in mind.

Your employer has prime responsibility to assure that the provisions of the standard are complied with both by the company and by individual workers. You, as a worker, however, also have a responsibility to assist your employer in complying with the standard. You can play a key role in protecting your own health by learning about the lead hazards and their control, learning what the standard requires, following the standard where it governs your own actions, and seeing that your employer complies with provisions governing employee actions.

(iv) Reporting signs and symptoms of health problems. You should immediately notify your employer if you develop signs or symptoms associated with lead poisoning or if you desire medical advice concerning the effects of current or past exposure to lead or your ability to have a healthy child. You should also notify your employer if you have difficulty breathing during a respirator fit test or while wearing a respirator. In each of these cases, your employer must make available to you appropriate medical examinations or consultations. These must be provided at no cost to you and at a reasonable time and place. The standard contains a procedure whereby you can obtain a second opinion by a physician of your choice if your employer selected the initial physician.

[Statutory Authority: Chapter 49.17 RCW. 93-22-054 (Order 93-07), § 296-155-17650, filed 10/29/93, effective 12/10/93.]

WAC 296-155-17652 Appendix B to WAC 296-155-176—Employee standard summary. This appendix summarizes key provisions of the standard for lead in construction that you as a worker should become familiar with.

(1) Permissible exposure limit (PEL)—WAC 296-62-17607.

The standard sets a permissible exposure limit (PEL) of 50 micrograms of lead per cubic meter of air (50 $\mu g/m^3$), averaged over an 8-hour workday which is referred to as a time-weighted average (TWA). This is the highest level of lead in air to which you may be permissibly exposed over an 8-hour workday. However, since this is an 8-hour average, short exposures above the PEL are permitted so long as for

each 8-hour work day your average exposure does not exceed this level. This standard, however, takes into account the fact that your daily exposure to lead can extend beyond a typical 8-hour workday as the result of overtime or other alterations in your work schedule. To deal with this situation, the standard contains a formula which reduces your permissible exposure when you are exposed more than 8 hours. For example, if you are exposed to lead for 10 hours a day, the maximum permitted average exposure would be 40 $\mu g/m^3$.

(2) Exposure assessment—WAC 296-155-17609.

If lead is present in your workplace in any quantity, your employer is required to make an initial determination of whether any employee's exposure to lead exceeds the action level (30 $\mu g/m^3$ averaged over an 8-hour day). Employee exposure is that exposure which would occur if the employee were not using a respirator. This initial determination requires your employer to monitor workers' exposures unless the employee has objective data which can demonstrate conclusively that no employee will be exposed to lead in excess of the action level. Where objective data is used in lieu of actual monitoring the employer must establish and maintain an accurate record, documenting its relevancy in assessing exposure levels for current job conditions. If such objective data is available, the employer need proceed no further on employee exposure assessment until such time that conditions have changed and the determination is no longer valid.

Objective data may be compiled from various sources, e.g., insurance companies and trade associations and information from suppliers or exposure data collected from similar operations. Objective data may also comprise previously-collected sampling data including area monitoring. If it cannot be determined through using objective data that worker exposure is less than the action level, your employer must conduct monitoring or must rely on relevant previous personal sampling, if available. Where monitoring is required for the initial determination, it may be limited to a representative number of employees who are reasonably expected to have the highest exposure levels. If your employer has conducted appropriate air sampling for lead in the past 12 months, they may use these results, provided they are applicable to the same employee tasks and exposure conditions and meet the requirements for accuracy as specified in the standard. As with objective data, if such results are relied upon for the initial determination, your employer must establish and maintain a record as to the relevancy of such data to current job conditions.

If there have been any employee complaints of symptoms which may be attributable to exposure to lead or if there is any other information or observations which would indicate employee exposure to lead, this must also be considered as part of the initial determination. If this initial determination shows that a reasonable possibility exists that any employee may be exposed, without regard to respirator, over the action level, your employer must set up an air monitoring program to determine the exposure level representative of each employee exposed to lead at your workplace. In carrying out this air monitoring program, your employer is not required to monitor the exposure of every employee, but they must monitor a representative number of employees and job types. Enough sampling must be done to enable each employee's exposure level to be reasonably represent full shift exposure. In addition, these air samples must be taken under conditions which represent each employee's regular, daily exposure to lead. Sampling performed in the past 12 months may be used to determine exposures above the action level if such sampling was conducted during work activities essentially similar to present work conditions.

The standard lists certain tasks which may likely result in exposures to lead in excess of the PEL and, in some cases, exposures in excess of 50 times the PEL. If you are performing any of these tasks, your employer must provide you with appropriate respiratory protection, protective clothing and equipment, change areas, hand washing facilities, biological monitoring, and training until such time that an exposure assessment is conducted which demonstrates that your exposure level is below the PEL.

If you are exposed to lead and air sampling is performed, your employer is required to notify you in writing within 5 working days of the air monitoring results which represent your exposure. If the results indicate that your exposure exceeds the PEL (without regard to your use of a respirator), then your employer must also notify you of this in writing, and provide you with a description of the corrective action that has been taken or will be taken to reduce your exposure.

Your exposure must be rechecked by monitoring, at least every six months if your exposure is at or over the action level but below the PEL. Your employer may discontinue monitoring for you if 2 consecutive measurements, taken at least 7 days apart, are at or below the action level. Air monitoring must be repeated every 3 months if you are exposed over the PEL. Your employer must continue monitoring for you at this frequency until 2 consecutive measurements, taken at least 7 days apart, are below the PEL but above the action level, at which time your employer must repeat monitoring of your exposure every six months and may discontinue monitoring only after your exposure drops to or below the action level. However, whenever there is a change of equipment, process, control, or personnel or a new type of job is added at your workplace which may result in new or additional exposure to lead, your employer must perform additional monitoring.

(3) Methods of compliance—WAC 296-155-17611.

Your employer is required to assure that no employee is exposed to lead in excess of the PEL as an 8-hour TWA. The standard for lead in construction requires employers to institute engineering and work practice controls including administrative controls to the extent feasible to reduce employee exposure to lead. Where such controls are feasible but not adequate to reduce exposures below the PEL they must be used nonetheless to reduce exposures to the lowest level that can be accomplished by these means and then supplemented with appropriate respiratory protection.

Your employer is required to develop and implement a written compliance program prior to the commencement of any job where employee exposures may reach the PEL as an 8-hour TWA. The standard identifies the various elements that must be included in the plan. For example, employers are required to include a description of operations in which lead is emitted, detailing other relevant information about the operation such as the type of equipment used, the type of material involved, employee job responsibilities, operating

procedures and maintenance practices. In addition, your employer's compliance plan must specify the means that will be used to achieve compliance and, where engineering controls are required, include any engineering plans or studies that have been used to select the control methods. If administrative controls involving job rotation are used to reduce employee exposure to lead, the job rotation schedule must be included in the compliance plan. The plan must also detail the type of protective clothing and equipment, including respirator, housekeeping and hygiene practices that will be used to protect you from the adverse effects of exposure to lead.

The written compliance program must be made available, upon request, to affected employees and their designated representatives, and the director.

Finally, the plan must be reviewed and updated at least every 6 months to assure it reflects the current status in exposure control.

(4) Respiratory protection—WAC 296-155-17613.

Your employer is required to select respirator from the types listed in Table I of the Respiratory Protection section of the standard (see WAC 296-155-17613). Any respirator chosen must be certified by the National Institute for Occupational Safety and Health (NIOSH) under the provisions of 42 CFR part 84. This respirator selection table will enable your employer to choose a type of respirator that will give you a proper amount of protection based on your airborne lead exposure. Your employer may select a type of respirator that provides greater protection than that required by the standard; that is, one recommended for a higher concentration of lead than is present in your workplace. For example, a powered air-purifying respirator (PAPR) is much more protective than a typical negative pressure respirator, and may also be more comfortable to wear. A PAPR has a filter, cartridge, or canister to clean the air, and a power source which continuously blows filtered air into your breathing zone. Your employer might make a PAPR available to you to ease the burden of having to wear a respirator for long periods of time. The standard provides that you can obtain a PAPR upon request.

Your employer must also start a Respiratory Protection Program. This program must include written procedures for the proper selection, use, cleaning, storage, and maintenance of respirator.

Your employer must ensure that your respirator facepiece fits properly. Proper fit of a respirator facepiece is critical to your protection from airborne lead. Obtaining a proper fit on each employee may require your employer to make available several different types of respirator masks. To ensure that your respirator fits properly and that facepiece leakage is minimal, your employer must give you either a qualitative or quantitative fit test as specified in WAC 296-62-07201 through 296-62-07248, Appendices A-1, A-2 and A-3 of chapter 296-62 WAC, Part E.

(5) Protective work clothing and equipment—WAC 296-155-17615.

If you are exposed to lead above the PEL as an 8-hour TWA, without regard to your use of a respirator, or if you are exposed to lead compounds such as lead arsenate or lead azide which can cause skin and eye irritation, your employer must provide you with protective work clothing and equipment appropriate for the hazard. If work clothing is provided, it must be provided in a clean and dry condition at least weekly, and daily if your airborne exposure to lead is greater than 200 $\mu g/m^3$. Appropriate protective work clothing and equipment can include coveralls or similar full-body work clothing, gloves, hats, shoes or disposable shoe coverlets, and face shields or vented goggles. Your employer is required to provide all such equipment at no cost to you. In addition, your employer is responsible for providing repairs and replacement as necessary, and also is responsible for the cleaning, laundering or disposal of protective clothing and equipment.

The standard requires that your employer assure that you follow good work practices when you are working in areas where your exposure to lead may exceed the PEL. With respect to protective clothing and equipment, where appropriate, the following procedures should be observed prior to beginning work:

- Change into work clothing and shoe covers in the clean section of the designated changing areas;
- Use work garments of appropriate protective gear, including respirator before entering the work area; and
- Store any clothing not worn under protective clothing in the designated changing area.

Workers should follow these procedures upon leaving the work area:

- HEPA vacuum heavily contaminated protective work clothing while it is still being worn. At no time may lead be removed from protective clothing by any means which result in uncontrolled dispersal of lead into the air;
- Remove shoe covers and leave them in the work area;
- Remove protective clothing and gear in the dirty area of the designated changing area. Remove protective coveralls by carefully rolling down the garment to reduce exposure to dust.
- Remove respirator last; and
- Wash hands and face.

Workers should follow these procedures upon finishing work for the day (in addition to procedures described above):

- Where applicable, place disposal coveralls and shoe covers with the abatement waste;
- Contaminated clothing which is to be cleaned, laundered or disposed of must be placed in closed containers in the change room.
- Clean protective gear, including respirator, according to standard procedures;
- Wash hands and face again.

If showers are available, take a shower and wash hair. If shower facilities are not available at the work site, shower immediately at home and wash hair.

(6) Housekeeping—WAC 296-155-17617.

Your employer must establish a housekeeping program sufficient to maintain all surfaces as free as practicable of accumulations of lead dust. Vacuuming is the preferred method of meeting this requirement, and the use of compressed air to clean floors and other surfaces is generally prohibited unless removal with compressed air is done in conjunction with ventilation systems designed to contain dispersal of the lead dust. Dry or wet sweeping, shoveling, or brushing may not be used except where vacuuming or other equally effective methods have been tried and do not work.

Vacuums must be used equipped with a special filter called a high-efficiency particulate air (HEPA) filter and emptied in a manner which minimizes the reentry of lead into the workplace.

(7) Hygiene facilities and practices—WAC 296-155-17619.

The standard requires that hand washing facilities be provided where occupational exposure to lead occurs. In addition, change areas, showers (where feasible), and lunchrooms or eating areas are to be made available to workers exposed to lead above the PEL. Your employer must assure that except in these facilities, food and beverage is not present or consumed, tobacco products are not present or used, and cosmetics are not applied, where airborne exposures are above the PEL. Change rooms provided by your employer must be equipped with separate storage facilities for your protective clothing and equipment and street clothes to avoid cross-contamination. After showering, no required protective clothing or equipment worn during the shift may be worn home. It is important that contaminated clothing or equipment be removed in change areas and not be worn home or you will extend your exposure and expose your family since lead from your clothing can accumulate in your house, car, etc.

Lunchrooms or eating areas may not be entered with protective clothing or equipment unless surface dust has been removed by vacuuming, downdraft booth, or other cleaning method. Finally, workers exposed above the PEL must wash both their hands and faces prior to eating, drinking, smoking or applying cosmetics.

All of the facilities and hygiene practices just discussed are essential to minimize additional sources of lead absorption from inhalation or ingestion of lead that may accumulate on you, your clothes, or your possessions. Strict compliance with these provisions can virtually eliminate several sources of lead exposure which significantly contribute to excessive lead absorption.

(8) Medical surveillance—WAC 296-155-17621.

The medical surveillance program is part of the standard's comprehensive approach to the prevention of lead-related disease. Its purpose is to supplement the main thrust of the standard which is aimed at minimizing airborne concentrations of lead and sources of ingestion. Only medical surveillance can determine if the other provisions of the standard have affectively protected you as an individual. Compliance with the standard's provision will protect most workers from the adverse effects of lead exposure, but may not be satisfactory to protect individual workers:

- Who have high body burdens of lead acquired over past years,
- Who have additional uncontrolled sources of nonoccupational lead exposure,
- Who exhibit unusual variations in lead absorption rates, or
- Who have specific nonwork related medical conditions which could be aggravated by lead exposure (e.g., renal disease, anemia).

In addition, control systems may fail, or hygiene and respirator programs may be inadequate. Periodic medical surveillance of individual workers will help detect those failures. Medical surveillance will also be important to protect your reproductive ability—regardless of whether you are a man or woman.

All medical surveillance required by the standard must be performed by or under the supervision of a licensed physician. The employer must provide required medical surveillance without cost to employees and at a reasonable time and place. The standard's medical surveillance program has two parts—periodic biological monitoring and medical examinations. Your employer's obligation to offer you medical surveillance is triggered by the results of the air monitoring program. Full medical surveillance must be made available to all employees who are or may be exposed to lead in excess of the action level for more than 30 days a year and whose blood lead level exceeds 40 μg/dl. Initial medical surveillance consisting of blood sampling and analysis for lead and zinc protoporphyrin must be provided to all employees exposed at any time (1 day) above the action level.

Biological monitoring under the standard must be provided at least every 2 months for the first 6 months and every 6 months thereafter until your blood lead level is below 40 μg/dl. A zinc protoporphyrin (ZPP) test is a very useful blood test which measures an adverse metabolic effect of lead on your body and is therefore an indicator of lead toxicity.

If your BLL exceeds 40 μg/dl the monitoring frequency must be increased from every 6 months to at least every 2 months and not reduced until two consecutive BLLs indicate a blood lead level below 40 μg/dl. Each time your BLL is determined to be over 40 μg/dl, your employer must notify you of this in writing within five working days of their receipt of the test results. The employer must also inform you that the standard requires temporary medical removal with economic protection when your BLL exceeds 50 μg/dl. (See Discussion of medical removal protection—WAC 296-155-17623.) Anytime your BLL exceeds 50 μg/dl your employer must make available to you within two weeks of receipt of these test results a second follow-up BLL test to confirm your BLL. If the two tests both exceed 50 μg/dl, and you are temporarily removed, then your employer must make successive BLL tests available to you on a monthly basis during the period of your removal.

Medical examinations beyond the initial one must be made available on an annual basis if your blood lead level exceeds 40 μg/dl at any time during the preceding year and you are being exposed above the airborne action level of 30 $\mu g/m^3$ for 30 or more days per year. The initial examination will provide information to establish a baseline to which subsequent data can be compared.

An initial medical examination to consist of blood sampling and analysis for lead and zinc protoporphyrin must also be made available (prior to assignment) for each employee being assigned for the first time to an area where the airborne concentration of lead equals or exceeds the action level at any time. In addition, a medical examination or consultation must be made available as soon as possible if you notify your employer that you are experiencing signs or symptoms commonly associated with lead poisoning or that you have difficulty breathing while wearing a respirator or during a respirator fit test. You must also be provided a medical examination or consultation if you notify your employer that you desire

medical advice concerning the effects of current or past exposure to lead on your ability to procreate a healthy child.

Finally, appropriate follow-up medical examinations or consultations may also be provided for employees who have been temporarily removed from exposure under the medical removal protection provisions of the standard. (See subsection (9), below.)

The standard specifies the minimum content of preassignment and annual medical examinations. The content of other types of medical examinations and consultations is left up to the sound discretion of the examining physician. Preassignment and annual medical examinations must include:

- A detailed work history and medical history;
- A thorough physical examination, including an evaluation of your pulmonary status if you will be required to use a respirator;
- A blood pressure measurement; and
- A series of laboratory tests designed to check your blood chemistry and your kidney function.

In addition, at any time upon your request, a laboratory evaluation of male fertility will be made (microscopic examination of a sperm sample), or a pregnancy test will be given.

The standard does not require that you participate in any of the medical procedures, tests, etc. which your employer is required to make available to you. Medical surveillance can, however, play a very important role in protecting your health. You are strongly encouraged, therefore, to participate in a meaningful fashion. The standard contains a multiple physician review mechanism which will give you a chance to have a physician of your choice directly participate in the medical surveillance program. If you are dissatisfied with an examination by a physician chosen by your employer, you can select a second physician to conduct an independent analysis. The two doctors would attempt to resolve any differences of opinion, and select a third physician to resolve any firm dispute. Generally your employer will choose the physician who conducts medical surveillance under the lead standard-unless you and your employer can agree on the choice of a physician or physicians. Some companies and unions have agreed in advance, for example, to use certain independent medical laboratories or panels of physicians. Any of these arrangements are acceptable so long as required medical surveillance is made available to workers.

The standard requires your employer to provide certain information to a physician to aid in their examination of you. This information includes:

- The standard and its appendices,
- A description of your duties as they relate to occupational lead exposure,
- Your exposure level or anticipated exposure level,
- A description of any personal protective equipment you wear,
- Prior blood lead level results, and
- Prior written medical opinions concerning you that the employer has.

After a medical examination or consultation the physician must prepare a written report which must contain:

- The physician's opinion as to whether you have any medical condition which places you at increased risk of material impairment to health from exposure to lead,
- Any recommended special protective measures to be provided to you,
- Any blood lead level determinations, and
- Any recommended limitation on your use of respirator.

This last element must include a determination of whether you can wear a powered air purifying respirator (PAPR) if you are found unable to wear a negative pressure respirator.

The medical surveillance program of the lead standard may at some point in time serve to notify certain workers that they have acquired a disease or other adverse medical condition as a result of occupational lead exposure. If this is true, these workers might have legal rights to compensation from public agencies, their employers, firms that supply hazardous products to their employers, or other persons. Some states have laws, including worker compensation laws, that disallow a worker who learns of a job-related health impairment to sue, unless the worker sues within a short period of time after learning of the impairment. (This period of time may be a matter of months or years.) An attorney can be consulted about these possibilities. It should be stressed that WISHA is in no way trying to either encourage or discourage claims or lawsuits. However, since results of the standard's medical surveillance program can significantly affect the legal remedies of a worker who has acquired a job-related disease or impairment, it is proper for WISHA to make you aware of this.

The medical surveillance section of the standard also contains provisions dealing with chelation. Chelation is the use of certain drugs (administered in pill form or injected into the body) to reduce the amount of lead absorbed in body tissues. Experience accumulated by the medical and scientific communities has largely confirmed the effectiveness of this type of therapy for the treatment of very severe lead poisoning. On the other hand, it has also been established that there can be a long list of extremely harmful side effects associated with the use of chelating agents. The medical community has balanced the advantages and disadvantages resulting from the use of chelating agents in various circumstances and has established when the use of these agents is acceptable. The standard includes these accepted limitations due to a history of abuse of chelation therapy by some lead companies. The most widely used chelating agents are calcium disodium EDTA, (Ca Na2 EDTA), Calcium Disodium Versenate (Versenate), and d-penicillamine (penicillamine or Cupramine).

The standard prohibits "prophylactic chelation" of any employee by any person the employer retains, supervises or controls. "Prophylactic chelation" is the routine use of chelating or similarly acting drugs to prevent elevated blood levels in workers who are occupationally exposed to lead, or the use of these drugs to routinely lower blood lead levels to predesignated concentrations believed to be "safe." It should be emphasized that where an employer takes a worker who has no symptoms of lead poisoning and has chelation carried out by a physician (either inside or outside of a hospital) solely to reduce the worker's blood lead level, that will generally be considered prophylactic chelation. The use of a hospital and a physician does not mean that prophylactic chelation is not being performed. Routine chelation to prevent increased or

reduce current blood lead levels is unacceptable whatever the setting.

The standard allows the use of "therapeutic" or "diagnostic" chelation if administered under the supervision of a licensed physician in a clinical setting with thorough and appropriate medical monitoring. Therapeutic chelation responds to severe lead poisoning where there are marked symptoms. Diagnostic chelation involved giving a patient a dose of the drug then collecting all urine excreted for some period of time as an aid to the diagnosis of lead poisoning.

In cases where the examining physician determines that chelation is appropriate, you must be notified in writing of this fact before such treatment. This will inform you of a potentially harmful treatment, and allow you to obtain a second opinion.

(9) Medical removal protection—WAC 296-155-17623.

Excessive lead absorption subjects you to increased risk of disease. Medical removal protection (MRP) is a means of protecting you when, for whatever reasons, other methods, such as engineering controls, work practices, and respirator, have failed to provide the protection you need. MRP involves the temporary removal of a worker from their regular job to a place of significantly lower exposure without any loss of earnings, seniority, or other employment rights or benefits. The purpose of this program is to cease further lead absorption and allow your body to naturally excrete lead which has previously been absorbed. Temporary medical removal can result from an elevated blood lead level, or a medical opinion. For up to 18 months, or for as long as the job the employee was removed from lasts, protection is provided as a result of either form of removal. The vast majority of removed workers, however, will return to their former jobs long before this eighteen month period expires.

You may also be removed from exposure even if your blood lead level is below 50 μ/dl if a final medical determination indicates that you temporarily need reduced lead exposure for medical reasons. If the physician who is implementing your employers medical program makes a final written opinion recommending your removal or other special protective measures, your employer must implement the physician's recommendation. If you are removed in this manner, you may only be returned when the doctor indicates that it is safe for you to do so.

The standard does not give specific instructions dealing with what an employer must do with a removed worker. Your job assignment upon removal is a matter for you, your employer and your union (if any) to work out consistent with existing procedures for job assignments. Each removal must be accomplished in a manner consistent with existing collective bargaining relationships. Your employer is given broad discretion to implement temporary removals so long as no attempt is made to override existing agreements. Similarly, a removed worker is provided no right to veto an employer's choice which satisfies the standard.

In most cases, employers will likely transfer removed employees to other jobs with sufficiently low lead exposure. Alternatively, a worker's hours may be reduced so that the time weighted average exposure is reduced, or they may be temporarily laid off if no other alternative is feasible.

In all of these situation, MRP benefits must be provided during the period of removal—i.e., you continue to receive the same earnings, seniority, and other rights and benefits you would have had if you had not been removed. Earnings includes more than just your base wage; it includes overtime, shift differentials, incentives, and other compensation you would have earned if you had not been removed. During the period of removal you must also be provided with appropriate follow-up medical surveillance. If you were removed because your blood lead level was too high, you must be provided with a monthly blood test. If a medical opinion caused your removal, you must be provided medical tests or examinations that the doctor believes to be appropriate. If you do not participate in this follow up medical surveillance, you may lose your eligibility for MRP benefits.

When you are medically eligible to return to your former job, your employer must return you to your "former job status." This means that you are entitled to the position, wages, benefits, etc., you would have had if you had not been removed. If you would still be in your old job if no removal had occurred that is where you go back. If not, you are returned consistent with whatever job assignment discretion your employer would have had if no removal had occurred. MRP only seeks to maintain your rights, not expand them or diminish them.

If you are removed under MRP and you are also eligible for worker compensation or other compensation for lost wages, your employer's MRP benefits obligation is reduced by the amount that you actually receive from these other sources. This is also true if you obtain other employment during the time you are laid off with MRP benefits.

The standard also covers situations where an employer voluntarily removes a worker from exposure to lead due to the effects of lead on the employee's medical condition, even though the standard does not require removal. In these situations MRP benefits must still be provided as though the standard required removal. Finally, it is important to note that in all cases where removal is required, respirator cannot be used as a substitute. Respirator may be used before removal becomes necessary, but not as an alternative to a transfer to a low exposure job, or to a lay-off with MRP benefits.

(10) Employee information and training—WAC 296-155-17625.

Your employer is required to provide an information and training program for all employees exposed to lead above the action level or who may suffer skin or eye irritation from lead compounds such as lead arsenate or lead azide. The program must train these employees regarding the specific hazards associated with their work environment, protective measures which can be taken, including the contents of any compliance plan in effect, the danger of lead to their bodies (including their reproductive systems), and their rights under the standard. All employees must be trained prior to initial assignment to areas where there is a possibility of exposure over the action level.

This training program must also be provided at least annually thereafter unless further exposure above the action level will not occur.

(11) Signs—WAC 296-155-17627.

The standard requires that the following warning sign be posted in work areas where the exposure to lead exceeds the PEL:

WARNING
LEAD WORK AREA
POISON
NO SMOKING OR EATING

These signs are to be posted and maintained in a manner which assures that the legend is readily visible.

(12) Recordkeeping—WAC 296-155-17629.

Your employer is required to keep all records of exposure monitoring for airborne lead. These records must include the name and job classification of employees measured, details of the sampling and analytical techniques, the results of this sampling, and the type of respiratory protection being worn by the person sampled. Such records are to be retained for at least 30 years. Your employer is also required to keep all records of biological monitoring and medical examination results. These records must include the names of the employees, the physician's written opinion, and a copy of the results of the examination. Medical records must be preserved and maintained for the duration of employment plus 30 years. However, if the employee's duration of employment is less than one year, the employer need not retain that employee's medical records beyond the period of employment if they are provided to the employee upon termination of employment.

Recordkeeping is also required if you are temporarily removed from your job under the medical removal protection program. This record must include your name and Social Security number, the date of your removal and return, how the removal was or is being accomplished, and whether or not the reason for the removal was an elevated blood lead level. Your employer is required to keep each medical removal record only for as long as the duration of an employee's employment.

The standard requires that if you request to see or copy environmental monitoring, blood lead level monitoring, or medical removal records, they must be made available to you or to a representative that you authorize. Your union also has access to these records. Medical records other than BLL's must also be provided upon request to you, to your physician or to any other person whom you may specifically designate. Your union does not have access to your personal medical records unless you authorize their access.

(13) Observation of monitoring—WAC 296-155-17631.

When air monitoring for lead is performed at your workplace as required by this standard, your employer must allow you or someone you designate to act as an observer of the monitoring. Observers are entitled to an explanation of the measurement procedure, and to record the results obtained. Since results will not normally be available at the time of the monitoring, observers are entitled to record or receive the results of the monitoring when returned by the laboratory. Your employer is required to provide the observer with any personal protective devices required to be worn by employees working in the area that is being monitored. The employer must require the observer to wear all such equipment and to comply with all other applicable safety and health procedures.

(14) Startup date—WAC 296-155-17635.

Employer obligations under the standard begin as of that date with full implementation of engineering controls as soon as possible but no later than within 4 months, and all other provisions completed as soon as possible, but no later than within 2 months from the effective date.

(15) For additional information.

(a) A copy of the standard for lead in construction can be obtained free of charge by calling or writing to the department of labor and industries, Post Office Box 44620, Mailstop 44620, Olympia, Washington 98504-4620: Telephone (360) 956-5527.

(b) Additional information about the standard, its enforcement, and your employer's compliance can be obtained from the nearest office listed in your telephone directory under the state of Washington, department of labor and industries.

[Statutory Authority: RCW 49.17.010, [49.17].040 and [49.17].050. 99-10-071, § 296-155-17652, filed 5/4/99, effective 9/1/99. Statutory Authority: Chapter 49.17 RCW. 93-22-054 (Order 93-07), § 296-155-17652, filed 10/29/93, effective 12/10/93.]

WAC 296-155-17654 Appendix C to WAC 296-155-176—Medical surveillance guidelines. (1) Introduction.

The primary purpose of the Washington Industrial Safety and Health Act of 1973 is to assure, so far as possible, safe and healthful working conditions for every working man and woman. The occupational health standard for lead in construction is designed to protect workers exposed to inorganic lead including metallic lead, all inorganic lead compounds and organic lead soaps.

Under this standard occupational exposure to inorganic lead is to be limited to 50 $\mu g/m^3$ (micrograms per cubic meter) based on an 8 hour time-weighted average (TWA). This permissible exposure limit (PEL) must be achieved through a combination of engineering, work practice and administrative controls to the extent feasible. Where these controls are in place but are found not to reduce employee exposures to or below the PEL, they must be used nonetheless, and supplemented with respirators to meet the 50 $\mu g/m^3$ exposure limit.

The standard also provides for a program of biological monitoring for employees exposed to lead above the action level at any time, and additional medical surveillance for all employees exposed to levels of inorganic lead above 30 $\mu g/m^3$ (TWA) for more than 30 days per year and whose BLL exceeds 40 $\mu g/dl$.

The purpose of this document is to outline the medical surveillance provisions of the standard for inorganic lead in construction, and to provide further information to the physician regarding the examination and evaluation of workers exposed to inorganic lead.

Subsection (2) provides a detailed description of the monitoring procedure including the required frequency of blood testing for exposed workers, provisions for medical removal protection (MRP), the recommended right of the employee to a second medical opinion, and notification and recordkeeping requirements of the employer. A discussion of the requirements for respirator use and respirator monitoring and WISHA's position on prophylactic chelation therapy are also included in this subsection.

Subsection (3) discusses the toxic effects and clinical manifestations of lead poisoning and effects of lead intoxication on enzymatic pathways in heme synthesis. The adverse

effects on both male and female reproductive capacity and on the fetus are also discussed.

Subsection (4) outlines the recommended medical evaluation of the worker exposed to inorganic lead, including details of the medical history, physical examination, and recommended laboratory tests, which are based on the toxic effects of lead as discussed in subsection (3).

Subsection (5) provides detailed information concerning the laboratory tests available for the monitoring of exposed workers. Included also is a discussion of the relative value of each test and the limitations and precautions which are necessary in the interpretation of the laboratory results.

(2) Medical surveillance and monitoring requirements for workers exposed to inorganic lead.

Under the standard for inorganic lead in the construction industry, initial medical surveillance consisting of biological monitoring to include blood lead and ZPP level determination shall be provided to employees exposed to lead at or above the action level on any one day. In addition, a program of biological monitoring is to be made available to all employees exposed above the action level at any time and additional medical surveillance is to be made available to all employees exposed to lead above 30 μg/m^3 TWA for more than 30 days each year and whose BLL exceeds 40 μg/dl. This program consists of periodic blood sampling and medical evaluation to be performed on a schedule which is defined by previous laboratory results, worker complaints or concerns, and the clinical assessment of the examining physician.

Under this program, the blood lead level (BLL) of all employees who are exposed to lead above 30 μg/m^3 for more than 30 days per year or whose blood lead is above 40 μg/dl but exposed for no more than 30 days per year is to be determined at least every two months for the first six months of exposure and every six months thereafter. The frequency is increased to every two months for employees whose last blood lead level was 40 μg/dl or above. For employees who are removed from exposure to lead due to an elevated blood lead, a new blood lead level must be measured monthly. A zinc protoporphyrin (ZPP) measurement is strongly recommended on each occasion that a blood lead level measurement is made.

An annual medical examination and consultation performed under the guidelines discussed in subsection (4) is to be made available to each employee exposed above 30 μg/m^3 for more than 30 days per year for whom a blood test conducted at any time during the preceding 12 months indicated a blood lead level at or above 40 μg/dl. Also, an examination is to be given to all employees prior to their assignment to an area in which airborne lead concentrations reach or exceed the 30 μg/m^3 for more than 30 days per year. In addition, a medical examination must be provided as soon as possible after notification by an employee that the employee has developed signs or symptoms commonly associated with lead intoxication, that the employee desires medical advice regarding lead exposure and the ability to procreate a healthy child, or that the employee has demonstrated difficulty in breathing during a respirator fitting test or during respirator use. An examination is also to be made available to each employee removed from exposure to lead due to a risk of sustaining material impairment to health, or otherwise limited or specially protected pursuant to medical recommendations.

Results of biological monitoring or the recommendations of an examining physician may necessitate removal of an employee from further lead exposure pursuant to the standard's medical removal protection (MRP) program. The object of the MRP program is to provide temporary medical removal to workers either with substantially elevated blood lead levels or otherwise at risk of sustaining material health impairment from continued substantial exposure to lead.

Under the standard's ultimate worker removal criteria, a worker is to be removed from any work having an eight hour TWA exposure to lead of 30 μg/m^3 when their blood lead level reaches 50 μg/dl and is confirmed by a second follow-up blood lead level performed within two weeks after the employer receives the results of the first blood sampling test. Return of the employee to their job status depends on a worker's blood lead level declining to 40 μg/dl.

As part of the standard, the employer is required to notify in writing each employee whose blood lead level exceeds 40 μg/dl. In addition each such employee is to be informed that the standard requires medical removal with MRP benefits, discussed below, when an employee's blood lead level exceeds the above defined limit.

In addition to the above blood lead level criterion, temporary worker removal may also take place as a result of medical determinations and recommendations. Written medical opinions must be prepared after each examination pursuant to the standard. If the examining physician includes a medical finding, determination or opinion that the employee has a medical condition which places the employee at increased risk of material health impairment from exposure to lead, then the employee must be removed from exposure to lead at or above 30 μg/m^3. Alternatively, if the examining physician recommends special protective measures for an employee (e.g., use of a powered air purifying respirator) or recommends limitations on an employee's exposure to lead, then the employer must implement these recommendations.

Recommendations may be more stringent than the specific provisions of the standard. The examining physician, therefore, is given broad flexibility to tailor special protective procedures to the needs of individual employees. This flexibility extends to the evaluation and management of pregnant workers and male and female workers who are planning to raise children. Based on the history, physical examination, and laboratory studies, the physician might recommend special protective measures or medical removal for an employee who is pregnant or who is planning to conceive a child when, in the physician's judgment, continued exposure to lead at the current job would pose a significant risk. The return of the employee to their former job status, or the removal of special protections or limitations, depends upon the examining physician determining that the employee is no longer at increased risk of material impairment or that special measures are no longer needed.

During the period of any form of special protection or removal, the employer must maintain the worker's earnings, seniority, and other employment rights and benefits (as though the worker had not been removed) for a period of up to 18 months or for as long as the job the employee was

removed from lasts if less than 18 months. This economic protection will maximize meaningful worker participation in the medical surveillance program, and is appropriate as part of the employer's overall obligation to provide a safe and healthful workplace. The provisions of MRP benefits during the employee's removal period may, however, be conditioned upon participation in medical surveillance.

The lead standard provides for a multiple physician review in cases where the employee wishes a second opinion concerning potential lead poisoning or toxicity. If an employee wishes a second opinion, they can make an appointment with a physician of their choice. This second physician will review the findings, recommendations or determinations of the first physician and conduct any examinations, consultations or tests deemed necessary in an attempt to make a final medical determination. If the first and second physicians do not agree in their assessment they must try to resolve their differences. If they cannot reach an agreement then they must designate a third physician to resolve the dispute.

The employer must provide examining and consulting physicians with the following specific information: A copy of the lead regulations and all appendices, a description of the employee's duties as related to exposure, the exposure level or anticipated level to lead and any other toxic substances (if applicable), a description of personal protective equipment used, blood lead levels, and all prior written medical opinions regarding the employee in the employer's possession or control. The employer must also obtain from the physician and provide the employee with a written medical opinion containing blood lead levels, the physicians's opinion as to whether the employee is at risk of material impairment to health, any recommended protective measures for the employee if further exposure is permitted, as well as any recommended limitations upon an employee's use of respirators.

Employers must instruct each physician not to reveal to the employer in writing or in any other way their findings, laboratory results, or diagnoses which are felt to be unrelated to occupational lead exposure. They must also instruct each physician to advise the employee of any occupationally or non-occupationally related medical condition requiring further treatment or evaluation.

The standard provides for the use of respirators where engineering and other primary controls are not effective. However, the use of respirator protection shall not be used in lieu of temporary medical removal due to elevated blood lead levels or findings that an employee is at risk of material health impairment. This is based on the numerous inadequacies of respirators including skin rash where the facepiece makes contact with the skin, unacceptable stress to breathing in some workers with underlying cardiopulmonary impairment, difficulty in providing adequate fit, the tendency for respirators to create additional hazards by interfering with vision, hearing, and mobility, and the difficulties of assuring the maximum effectiveness of a complicated work practice program involving respirators. Respirators do, however, serve a useful function where engineering and work practice controls are inadequate by providing supplementary, interim, or short-term protection, provided they are properly selected for the environment in which the employee will be working, properly fitted to the employee, maintained and cleaned periodically, and worn by the employee when required.

In its standard on occupational exposure to inorganic lead in the construction industry, WISHA has prohibited prophylactic chelation. Diagnostic and therapeutic chelation are permitted only under the supervision of a licensed physician with appropriate medical monitoring in an acceptable clinical setting. The decision to initiate chelation therapy must be made on an individual basis and take into account the severity of symptoms felt to be a result of lead toxicity along with blood lead levels, ZPP levels, and other laboratory tests as appropriate. EDTA and penicillamine which are the primary chelating agents used in the therapy of occupational lead poisoning have significant potential side effects and their use must be justified on the basis of expected benefits to the worker. Unless frank and severe symptoms are present, therapeutic chelation is not recommended, given the opportunity to remove a worker from exposure and allow the body to naturally excrete accumulated lead. As a diagnostic aid, the chelation mobilization test using CA-EDTA has limited applicability. According to some investigators, the test can differentiate between lead-induced and other nephropathies. The test may also provide an estimation of the mobile fraction of the total body lead burden.

Employers are required to assure that accurate records are maintained on exposure assessment, including environmental monitoring, medical surveillance, and medical removal for each employee. Exposure assessment records must be kept for at least 30 years. Medical surveillance records must be kept for the duration of employment plus 30 years except in cases where the employment was less than one year. If duration of employment is less than one year, the employer need not retain this record beyond the term of employment if the record is provided to the employee upon termination of employment. Medical removal records also must be maintained for the duration of employment. All records required under the standard must be made available upon request to the director. Employers must also make environmental and biological monitoring and medical removal records available to affected employees and to former employees or their authorized employee representatives. Employees or their specifically designated representatives have access to their entire medical surveillance records.

In addition, the standard requires that the employer inform all workers exposed to lead at or above 30 $\mu g/m^3$ of the provisions of the standard and all its appendices, the purpose and description of medical surveillance and provisions for medical removal protection if temporary removal is required. An understanding of the potential health effects of lead exposure by all exposed employees along with full understanding of their rights under the lead standard is essential for an effective monitoring program.

(3) Adverse health effects of inorganic lead.

Although the toxicity of lead has been known for 2,000 years, the knowledge of the complex relationship between lead exposure and human response is still being refined. Significant research into the toxic properties of lead continues throughout the world, and it should be anticipated that our understanding of thresholds of effects and margins of safety will be improved in future years. The provisions of the lead standard are founded on two prime medical judgments: First,

the prevention of adverse health effects from exposure to lead throughout a working lifetime requires that worker blood lead levels be maintained at or below 40 μg/dl and second, the blood lead levels of workers, male or female, who intend to parent in the near future should be maintained below 30 μg/dl to minimize adverse reproductive health effects to the parents and developing fetus. The adverse effects of lead on reproduction are being actively researched and WISHA encourages the physician to remain abreast of recent developments in the area to best advise pregnant workers or workers planning to conceive children.

The spectrum of health effects caused by lead exposure can be subdivided into five developmental stages: Normal, physiological changes of uncertain significance, pathophysiological changes, overt symptoms (morbidity), and mortality. Within this process there are no sharp distinctions, but rather a continuum of effects. Boundaries between categories overlap due to the wide variation of individual responses and exposures in the working population. WISHA's development of the lead standard focused on pathophysiological changes as well as later stages of disease.

(a) Heme synthesis inhibition. The earliest demonstrated effect of lead involves its ability to inhibit at least two enzymes of the heme synthesis pathway at very low blood levels. Inhibition of delta aminolevulinic acid dehydrase (ALA-D) which catalyzes the conversion of delta-aminolevulinic acid (ALA) to protoporphyrin is observed at a blood lead level below 20 μg/dl. At a blood lead level of 40 μg/dl, more than 20% of the population would have 70% inhibition of ALA-D. There is an exponential increase in ALA excretion at blood lead levels greater than 40 μg/dl.

Another enzyme, ferrochelatase, is also inhibited at low blood lead levels. Inhibition of ferrochelatase leads to increased free erythrocyte protoporphyrin (FEP) in the blood which can then bind to zinc to yield zinc protoporphyrin. At a blood lead level of 50 μg/dl or greater, nearly 100% of the population will have an increase in FEP. There is also an exponential relationship between blood lead levels greater than 40 μg/dl and the associated ZPP level, which has led to the development of the ZPP screening test for lead exposure.

While the significance of these effects is subject to debate, it is WISHA's position that these enzyme disturbances are early stages of a disease process which may eventually result in the clinical symptoms of lead poisoning. Whether or not the effects do progress to the later stages of clinical disease, disruption of these enzyme processes over a working lifetime is considered to be a material impairment of health.

One of the eventual results of lead-induced inhibition of enzymes in the heme synthesis pathway is anemia which can be asymptomatic if mild but associated with a wide array of symptoms including dizziness, fatigue, and tachycardia when more severe. Studies have indicated that lead levels as low as 50 μg/dl can be associated with a definite decreased hemoglobin, although most cases of lead-induced anemia, as well as shortened red-cell survival times, occur at lead levels exceeding 80 μg/dl. Inhibited hemoglobin synthesis is more common in chronic cases whereas shortened erythrocyte life span is more common in acute cases.

In lead-induced anemias, there is usually a reticulocytosis along with the presence of basophilic stippling, and ringed sideroblasts, although none of the above are pathognomonic for lead-induced anemia.

(b) Neurological effects. Inorganic lead has been found to have toxic effects on both the central and peripheral nervous systems. The earliest stages of lead-induced central nervous system effects first manifest themselves in the form of behavioral disturbances and central nervous system symptoms including irritability, restlessness, insomnia and other sleep disturbances, fatigue, vertigo, headache, poor memory, tremor, depression, and apathy. With more severe exposure, symptoms can progress to drowsiness, stupor, hallucinations, delirium, convulsions and coma.

The most severe and acute form of lead poisoning which usually follows ingestion or inhalation of large amounts of lead is acute encephalopathy which may arise precipitously with the onset of intractable seizures, coma, cardiorespiratory arrest, and death within 48 hours.

While there is disagreement about what exposure levels are needed to produce the earliest symptoms, most experts agree that symptoms definitely can occur at blood lead levels of 60 μg/dl whole blood and therefore recommend a 40 μg/dl maximum. The central nervous system effects frequently are not reversible following discontinued exposure or chelation therapy and when improvement does occur, it is almost always only partial.

The peripheral neuropathy resulting from lead exposure characteristically involves only motor function with minimal sensory damage and has a marked predilection for the extensor muscles of the most active extremity. The peripheral neuropathy can occur with varying degrees of severity. The earliest and mildest form which can be detected in workers with blood lead levels as low as 50 μg/dl is manifested by slowing of motor nerve conduction velocity often without clinical symptoms. With progression of the neuropathy there is development of painless extensor muscle weakness usually involving the extensor muscles of the fingers and hand in the most active upper extremity, followed in severe cases by wrist drop or, much less commonly, foot drop.

In addition to slowing of nerve conduction, electromyographical studies in patients with blood lead levels greater than 50 μg/dl have demonstrated a decrease in the number of acting motor unit potentials, an increase in the duration of motor unit potentials, and spontaneous pathological activity including fibrillations and fasciculations. Whether these effects occur at levels of 40 μg/dl is undetermined.

While the peripheral neuropathies can occasionally be reversed with therapy, again such recovery is not assured particularly in the more severe neuropathies and often improvement is only partial. The lack of reversibility is felt to be due in part to segmental demyelination.

(c) Gastrointestinal. Lead may also affect the gastrointestinal system producing abdominal colic or diffuse abdominal pain, constipation, obstipation, diarrhea, anorexia, nausea and vomiting. Lead colic rarely develops at blood lead levels below 80 μg/dl.

(d) Renal. Renal toxicity represents one of the most serious health effects of lead poisoning. In the early stages of disease nuclear inclusion bodies can frequently be identified in

proximal renal tubular cells. Renal function remains normal and the changes in this stage are probably reversible. With more advanced disease there is progressive interstitial fibrosis and impaired renal function. Eventually extensive interstitial fibrosis ensues with sclerotic glomeruli and dilated and atrophied proximal tubules; all represent end stage kidney disease. Azotemia can be progressive, eventually resulting in frank uremia necessitating dialysis. There is occasionally associated hypertension and hyperuricemia with or without gout.

Early kidney disease is difficult to detect. The urinalysis is normal in early lead nephropathy and the blood urea nitrogen and serum creatinine increase only when two-thirds of kidney function is lost. Measurement of creatinine clearance can often detect earlier disease as can other methods of measurement of glomerular filtration rate. An abnormal Ca-EDTA mobilization test has been used to differentiate between lead-induced and other nephropathies, but this procedure is not widely accepted. A form of Fanconi syndrome with aminoaciduria, glycosuria, and hyperphosphaturia indicating severe injury to the proximal renal tubules is occasionally seen in children.

(e) Reproductive effects. Exposure to lead can have serious effects on reproductive function in both males and females. In male workers exposed to lead there can be a decrease in sexual drive, impotence, decreased ability to produce healthy sperm, and sterility. Malformed sperm (teratospermia), decreased number of sperm (hypospermia), and sperm with decreased motility (asthenospermia) can all occur. Teratospermia has been noted at mean blood lead levels of 53 μg/dl and hypospermia and asthenospermia at 41 μg/dl. Furthermore, there appears to be a dose-response relationship for teratospermia in lead exposed workers.

Women exposed to lead may experience menstrual disturbances including dysmenorrhea, menorrhagia and amenorrhea. Following exposure to lead, women have a higher frequency of sterility, premature births, spontaneous miscarriages, and stillbirths.

Germ cells can be affected by lead and cause genetic damage in the egg or sperm cells before conception and result in failure to implant, miscarriage, stillbirth, or birth defects.

Infants of mothers with lead poisoning have a higher mortality during the first year and suffer from lowered birth weights, slower growth, and nervous system disorders.

Lead can pass through the placental barrier and lead levels in the mother's blood are comparable to concentrations of lead in the umbilical cord at birth. Transplacental passage becomes detectable at 12-14 weeks of gestation and increases until birth.

There is little direct data on damage to the fetus from exposure to lead but it is generally assumed that the fetus and newborn would be at least as susceptible to neurological damage as young children. Blood lead levels of 50-60 μg/dl in children can cause significant neurobehavioral impairments and there is evidence of hyperactivity at blood levels as low as 25 μg/dl. Given the overall body of literature concerning the adverse health effects of lead in children, WISHA feels that the blood lead level in children should be maintained below 30 μg/dl with a population mean of 15 μg/dl. Blood lead levels in the fetus and newborn likewise should not exceed 30 μg/dl.

Because of lead's ability to pass through the placental barrier and also because of the demonstrated adverse effects of lead on reproductive function in both the male and female as well as the risk of genetic damage of lead on both the ovum and sperm, WISHA recommends a 30 μg/dl maximum permissible blood lead level in both males and females who wish to bear children.

(f) Other toxic effects. Debate and research continue on the effects of lead on the human body. Hypertension has frequently been noted in occupationally exposed individuals although it is difficult to assess whether this is due to lead's adverse effects on the kidney or if some other mechanism is involved. Vascular and electrocardiographic changes have been detected but have not been well characterized. Lead is thought to impair thyroid function and interfere with the pituitary-adrenal axis, but again these effects have not been well defined.

(4) Medical evaluation.

The most important principle in evaluating a worker for any occupational disease including lead poisoning is a high index of suspicion on the part of the examining physician. As discussed in section (3), lead can affect numerous organ systems and produce a wide array of signs and symptoms, most of which are non-specific and subtle in nature at least in the early stages of disease. Unless serious concern for lead toxicity is present, many of the early clues to diagnosis may easily be overlooked.

The crucial initial step in the medical evaluation is recognizing that a worker's employment can result in exposure to lead. The worker will frequently be able to define exposures to lead and lead containing materials but often will not volunteer this information unless specifically asked. In other situations the worker may not know of any exposures to lead but the suspicion might be raised on the part of the physician because of the industry or occupation of the worker. Potential occupational exposure to lead and its compounds occur in many occupations in the construction industry, including demolition and salvaging operations, removal or encapsulation of materials containing lead, construction, alteration, repair or renovation of structures containing lead, transportation, disposal, storage or containment of lead or lead-containing materials on construction sites, and maintenance operations associated with construction activities.

Once the possibility for lead exposure is raised, the focus can then be directed toward eliciting information from the medical history, physical exam, and finally from laboratory data to evaluate the worker for potential lead toxicity.

A complete and detailed work history is important in the initial evaluation. A listing of all previous employment with information on job description, exposure to fumes or dust, known exposures to lead or other toxic substances, a description of any personal protective equipment used, and previous medical surveillance should all be included in the worker's record. Where exposure to lead is suspected, information concerning on-the-job personal hygiene, smoking or eating habits in work areas, laundry procedures, and use of any protective clothing or respiratory protection equipment should be noted. A complete work history is essential in the medical

evaluation of a worker with suspected lead toxicity, especially when long term effects such as neurotoxicity and nephrotoxicity are considered.

The medical history is also of fundamental importance and should include a listing of all past and current medical conditions, current medications including proprietary drug intake, previous surgeries and hospitalizations, allergies, smoking history, alcohol consumption, and also non-occupational lead exposures such as hobbies (hunting, riflery). Also known childhood exposures should be elicited. Any previous history of hematological, neurological, gastrointestinal, renal, psychological, gynecological, genetic, or reproductive problems should be specifically noted.

A careful and complete review of systems must be performed to assess both recognized complaints and subtle or slowly acquired symptoms which the worker might not appreciate as being significant. The review of symptoms should include the following:

- General—weight loss, fatigue, decreased appetite.
- Head, eyes, ears, nose, throat (HEENT)—headaches, visual disturbances or decreased visual acuity, hearing deficits or tinnitus, pigmentation of the oral mucosa, or metallic taste in mouth.
- Cardio-pulmonary—shortness of breath, cough, chest pains, palpitations, or orthopnea.
- Gastrointestinal—nausea, vomiting, heartburn, abdominal pain, constipation or diarrhea.
- Neurologic—irritability, insomnia, weakness (fatigue), dizziness, loss of memory, confusion, hallucinations, incoordination, ataxia, decreased strength in hands or feet, disturbances in gait, difficulty in climbing stairs, or seizures.
- Hematologic—pallor, easy fatigability, abnormal blood loss, melena.
- Reproductive (male and female and spouse where relevant)—history of infertility, impotence, loss of libido, abnormal menstrual periods, history of miscarriages, stillbirths, or children with birth defects.
- Musculo-skeletal—muscle and joint pains.

The physical examination should emphasize the neurological, gastrointestinal, and cardiovascular systems. The worker's weight and blood pressure should be recorded and the oral mucosa checked for pigmentation characteristic of a possible Burtonian or lead line on the gingiva. It should be noted, however, that the lead line may not be present even in severe lead poisoning if good oral hygiene is practiced.

The presence of pallor on skin examination may indicate an anemia which, if severe, might also be associated with a tachycardia. If an anemia is suspected, an active search for blood loss should be undertaken including potential blood loss through the gastrointestinal tract.

A complete neurological examination should include an adequate mental status evaluation including a search for behavioral and psychological disturbances, memory testing, evaluation for irritability, insomnia, hallucinations, and mental clouding. Gait and coordination should be examined along with close observation for tremor. A detailed evaluation of peripheral nerve function including careful sensory and motor function testing is warranted. Strength testing particularly of extensor muscle groups of all extremities is of fundamental importance.

Cranial nerve evaluation should also be included in the routine examination.

The abdominal examination should include auscultation for bowel sounds and abdominal bruits and palpation for organomegaly, masses, and diffuse abdominal tenderness.

Cardiovascular examination should evaluate possible early signs of congestive heart failure. Pulmonary status should be addressed particularly if respirator protection is contemplated.

As part of the medical evaluation, the lead standard requires the following laboratory studies:

- Blood lead level.
- Hemoglobin and hematocrit determinations, red cell indices, and examination of the peripheral blood smear to evaluate red blood cell morphology.
- Blood urea nitrogen.
- Serum creatinine.
- Routine urinalysis with microscopic examination.
- A zinc protoporphyrin level.

In addition to the above, the physician is authorized to order any further laboratory or other tests which they deem necessary in accordance with sound medical practice. The evaluation must also include pregnancy testing or laboratory evaluation of male fertility if requested by the employee. Additional tests which are probably not warranted on a routine basis but may be appropriate when blood lead and ZPP levels are equivocal include delta aminolevulinic acid and coproporphyrin concentrations in the urine, and dark-field illumination for detection of basophilic stippling in red blood cells.

If an anemia is detected further studies including a careful examination of the peripheral smear, reticulocyte count, stool for occult blood, serum iron, total iron binding capacity, bilirubin, and, if appropriate, vitamin B12 and folate may be of value in attempting to identify the cause of the anemia.

If a peripheral neuropathy is suspected, nerve conduction studies are warranted both for diagnosis and as a basis to monitor any therapy.

If renal disease is questioned, a 24 hour urine collection for creatinine clearance, protein, and electrolytes may be indicated. Elevated uric acid levels may result from lead-induced renal disease and a serum uric acid level might be performed.

An electrocardiogram and chest X ray may be obtained as deemed appropriate.

Sophisticated and highly specialized testing should not be done routinely and where indicated should be under the direction of a specialist.

(5) Laboratory evaluation.

The blood lead level at present remains the single most important test to monitor lead exposure and is the test used in the medical surveillance program under the lead standard to guide employee medical removal. The ZPP has several advantages over the blood lead level. Because of its relatively recent development and the lack of extensive data concerning its interpretation, the ZPP currently remains an ancillary test.

This section will discuss the blood lead level and ZPP in detail and will outline their relative advantages and disadvantages. Other blood tests currently available to evaluate lead exposure will also be reviewed.

The blood lead level is a good index of current or recent lead absorption when there is no anemia present and when the worker has not taken any chelating agents. However, blood lead levels along with urinary lead levels do not necessarily indicate the total body burden of lead and are not adequate measures of past exposure. One reason for this is that lead has a high affinity for bone and up to 90% of the body's total lead is deposited there. A very important component of the total lead body burden is lead in soft tissue (liver, kidney, and brain). This fraction of the lead body burden, the biologically active lead, is not entirely reflected by blood lead levels since it is a function of the dynamics of lead absorption, distribution, deposition in bone and excretion. Following discontinuation of exposure to lead, the excess body burden is only slowly mobilized from bone and other relatively stable body stores and excreted. Consequently, a high blood lead level may only represent recent heavy exposure to lead without a significant total body excess and likewise a low blood lead level does not exclude an elevated total body burden of lead.

Also due to its correlation with recent exposures, the blood lead level may vary considerably over short time intervals.

To minimize laboratory error and erroneous results due to contamination, blood specimens must be carefully collected after thorough cleaning of the skin with appropriate methods using lead-free blood containers and analyzed by a reliable laboratory. Under the standard, samples must be analyzed in laboratories which are approved by OSHA. Analysis is to be made using atomic absorption spectrophotometry, anodic stripping voltammetry or any method which meets the accuracy requirements set forth by the standard.

The determination of lead in urine is generally considered a less reliable monitoring technique than analysis of whole blood primarily due to individual variability in urinary excretion capacity as well as the technical difficulty of obtaining accurate 24 hour urine collections. In addition, workers with renal insufficiency, whether due to lead or some other cause, may have decreased lead clearance and consequently urine lead levels may underestimate the true lead burden. Therefore, urine lead levels should not be used as a routine test.

The zinc protoporphyrin test, unlike the blood lead determination, measures an adverse metabolic effect of lead and as such is a better indicator of lead toxicity than the level of blood lead itself. The level of ZPP reflects lead absorption over the preceding 3 to 4 months, and therefore is a better indicator of lead body burden. The ZPP requires more time than the blood lead to read significantly elevated levels; the return to normal after discontinuing lead exposure is also slower. Furthermore, the ZPP test is simpler, faster, and less expensive to perform and no contamination is possible. Many investigators believe it is the most reliable means of monitoring chronic lead absorption.

Zinc protoporphyrin results from the inhibition of the enzyme ferrochelatase which catalyzes the insertion of an iron molecule into the protoporphyrin molecule, which then becomes heme. If iron is not inserted into the molecule then zinc, having a greater affinity for protoporphyrin, takes the place of the iron, forming ZPP.

An elevation in the level of circulating ZPP may occur at blood lead levels as low as 20-30 μg/dl in some workers. Once the blood lead level has reached 40 μg/dl there is more marked rise in the ZPP value from its normal range of less than 100 μg/dl 100 ml. Increases in blood lead levels beyond 40 μg/100 g are associated with exponential increases in ZPP.

Whereas blood lead levels fluctuate over short time spans, ZPP levels remain relatively stable. ZPP is measured directly in red blood cells and is present for the cell's entire 120 day life-span. Therefore, the ZPP level in blood reflects the average ZPP production over the previous 3-4 months and consequently the average lead exposure during that time interval.

It is recommended that a hematocrit be determined whenever a confirmed ZPP of 50 μg/100 ml whole blood is obtained to rule out a significant underlying anemia. If the ZPP is in excess of 100 μg/100 ml and not associated with abnormal elevations in blood lead levels, the laboratory should be checked to be sure that blood leads were determined using atomic absorption spectrophotometry anodic stripping voltammetry, or any method which meets the accuracy requirements set forth by the standard by an OSHA approved laboratory which is experienced in lead level determinations. Repeat periodic blood lead studies should be obtained in all individuals with elevated ZPP levels to be certain that an associated elevated blood lead level has not been missed due to transient fluctuations in blood leads.

ZPP has a characteristic fluorescence spectrum with a peak at 594 nm which is detectable with a hematofluorimeter. The hematofluorimeter is accurate and portable and can provide on-site, instantaneous results for workers who can be frequently tested via a finger prick.

Careful attention must be given to calibration and quality control procedures. Limited data on blood lead-ZPP correlations and the ZPP levels which are associated with the adverse health effects discussed in subsection (3) are the major limitations of the test. Also it is difficult to correlate ZPP levels with environmental exposure and there is some variation of response with age and sex. Nevertheless, the ZPP promises to be an important diagnostic test for the early detection of lead toxicity and its value will increase as more data is collected regarding its relationship to other manifestations of lead poisoning.

Levels of delta-aminolevulinic acid (ALA) in the urine are also used as a measure of lead exposure. Increasing concentrations of ALA are believed to result from the inhibition of the enzyme delta-aminolevulinic acid dehydrase (ALA-D). Although the test is relatively easy to perform, inexpensive, and rapid, the disadvantages include variability in results, the necessity to collect a complete 24 hour urine sample which has a specific gravity greater than 1.010, and also the fact that ALA decomposes in the presence of light.

The pattern of porphyrin excretion in the urine can also be helpful in identifying lead intoxication. With lead poisoning, the urine concentrations of coproporphyrins I and II, porphobilinogen and uroporphyrin I rise. The most important increase, however, is that of coproporphyrin III; levels may exceed 5,000 μg/l in the urine in lead poisoned individuals, but its correlation with blood lead levels and ZPP are not as good as those of ALA. Increases in urinary porphyrins are not diagnostic of lead toxicity and may be seen in porphyria,

some liver diseases, and in patients with high reticulocyte counts.

Summary. The Washington Industrial Safety and Health Act's standard for inorganic lead in the construction industry places significant emphasis on the medical surveillance of all workers exposed to levels of inorganic lead above 30 $\mu g/m^3$ TWA. The physician has a fundamental role in this surveillance program, and in the operation of the medical removal protection program.

Even with adequate worker education on the adverse health effects of lead and appropriate training in work practices, personal hygiene and other control measures, the physician has a primary responsibility for evaluating potential lead toxicity in the worker. It is only through a careful and detailed medical and work history, a complete physical examination and appropriate laboratory testing that an accurate assessment can be made. Many of the adverse health effects of lead toxicity are either irreversible or only partially reversible and therefore early detection of disease is very important.

This document outlines the medical monitoring program as defined by the occupational safety and health standard for inorganic lead. It reviews the adverse health effects of lead poisoning and describes the important elements of the history and physical examinations as they relate to these adverse effects. Finally, the appropriate laboratory testing for evaluating lead exposure and toxicity is presented.

It is hoped that this review and discussion will give the physician a better understanding of the WISHA standard with the ultimate goal of protecting the health and well-being of the worker exposed to lead under their care.

[Statutory Authority: Chapter 49.17 RCW. 93-22-054 (Order 93-07), § 296-155-17654, filed 10/29/93, effective 12/10/93.]

PART B-2
HAZARD COMMUNICATION

WAC 296-155-180 Hazard communication. General.

The employer shall develop and maintain a chemical hazard communication program as required by WAC 296-800-170, which will provide information to all employees relative to hazardous chemicals or substances to which they are exposed, or may become exposed, in the course of their employment.

[Statutory Authority: RCW 49.17.010, [49.17].040, and [49.17].050. 01-11-038, § 296-155-180, filed 5/9/01, effective 9/1/01. Statutory Authority: Chapter 49.17 RCW. 94-16-145, § 296-155-180, filed 8/3/94, effective 9/12/94; 89-11-035 (Order 89-03), § 296-155-180, filed 5/15/89, effective 6/30/89.]

PART C
PERSONAL PROTECTIVE AND LIFE SAVING EQUIPMENT

WAC 296-155-200 General requirements for personal protective equipment (PPE). (1) Supplying personal protective equipment

(a) Personal protective equipment (PPE) must be used wherever physical contact, absorption, or inhalation of a hazard could cause any injury or impairment to the function of any part of the body.

These hazards include:

- Hazardous processes;
- Environmental hazards;
- Chemical hazards;
- Radiological hazards;

OR

- Mechanical irritants.

Note: PPE includes:
- Protective equipment for eyes, face, head, hearing, and extremities;
- Protective clothing;
- Respiratory devices;

AND

- Protective shields and barriers.

(b) PPE must be maintained in a sanitary and reliable condition.

Reference: For requirements on maintaining specific personal protective equipment (PPE), see the following rules.
- Chapter 296-842 WAC, Respirators;

AND

- Chapter 296-817 WAC, Hearing loss prevention.

(c) If employees provide their own protective equipment, then the employer is responsible to make sure the PPE is:

- Adequate;
- Properly maintained;

AND

- Sanitary.

(d) All personal protective equipment must be of safe design and construction for the work to be performed.

(2) Minimum clothing requirements.

(a) Employers must ensure that employees wear at least:

- A short-sleeved shirt;
- Long pants;

AND

- Shoes that meet the requirements of WAC 296-155-212, Foot protection.

Definition:

A ***short-sleeved shirt*** covers the top of the shoulder and has material extending down the arm. If a short-sleeved shirt has a seam at the end of the shoulder, the material must extend down the arm from the seam.

Long pants have legs that extend past the knee when the wearer stands and leaves no exposed skin on the lower leg.

(b) Where there is a danger of contact with moving parts of machinery, or the work process is such that a hazard exists:

- The clothing of employees must fit closely about the body.
- Dangling neck wear, bracelets, wristwatches, rings, or similar articles must not be worn by employees.

Note: For additional related requirements see WAC 296-155-205, Head protection.

(3) The employer must require employees to wear appropriate PPE in all operations where:

- There is an exposure to hazardous conditions;

OR

- WAC 296-155-200, General requirements for personal protective equipment (PPE), indicates a need for using such equipment to reduce the hazards to the employees.

(4) Employees must comply with job safety practices and procedures and PPE requirements that are relevant to the job site.

(5) High visibility garments.

(a) During daylight hours, when employees' duties are performed in close proximity to moving vehicles, employers

must make sure that employees wear a high-visibility safety vest, shirt, or jacket that is fluorescent yellow-green, fluorescent orange-red, or fluorescent red in color. This garment must always be worn as an outer garment.

Definition:

For the purpose of this rule, ***hours of darkness*** means from one-half hour before sunset to one-half hour after sunrise.

(b) During hours of darkness, when employees' duties are performed in close proximity to moving vehicles, the employer must make sure that employees wear, at a minimum, a high-visibility safety vest, shirt, or jacket:

• Designed according to ANSI/ISEA 107-1999 Class 2 specifications;

• Worn as an outer garment;

AND

• Worn to provide three hundred sixty degrees of visibility around the employee.

Note: A high-visibility garment meets Class 2 specifications if the garment:
• Has an ANSI "Class 2" label;
OR
• Has at least seven hundred seventy-five square inches of background material and two hundred one square inches of retroflective material that encircles the torso and is placed to provide three hundred sixty degrees of visibility around the employee.

Note: • Fading and soiling may degrade the high-visibility characteristics of the garments.
• ANSI/ISEA 107-1999 is available by:
– Purchasing copies of ANSI/ISEA 107-1999 by writing:
– American National Standards Institute
11 West 42nd Street
New York, NY 10036
OR
– Contacting the ANSI website at http://web.ansi.org/.
OR
• Reading a copy of ANSI/ISEA 107-1999 at any Washington state library.

[Statutory Authority: RCW 49.17.010, 49.17.040, 49.17.050, 49.17.060. 04-24-089, § 296-155-200, filed 12/1/04, effective 1/1/05. Statutory Authority: RCW 49.17.010, [49.17].040, and [49.17].050. 01-11-038, § 296-155-200, filed 5/9/01, effective 9/1/01. Statutory Authority: Chapter 49.17 RCW. 94-15-096 (Order 94-07), § 296-155-200, filed 7/20/94, effective 9/20/94. Statutory Authority: RCW 49.17.040 and 49.17.050. 86-03-074 (Order 86-14), § 296-155-200, filed 1/21/86; Order 76-29, § 296-155-200, filed 9/30/76; Order 74-26, § 296-155-200, filed 5/7/74, effective 6/6/74.]

WAC 296-155-201 Definitions applicable to this chapter. (1) "Catenary life line" means a horizontal rope between two fixed anchorages, independent of the work surface, to which the lanyard is attached, either by tying or by means of a sliding connection. A catenary life line shall be capable of supporting a minimum dead weight of 5,400 pounds per person, applied at the midpoint of the line.

(2) "Contaminant" means any material which by reason of its action upon, within, or to a person or object is likely to cause physical harm.

(3) "Dropline" means a vertical rope from a fixed anchorage, independent of the work surface, to which the lanyard is affixed or tied.

(4) "Fixed anchorage" means a secure point of attachment, not a part of the work surface, for droplines, lifelines, catenary life lines, or lanyards. The fixed anchorage and its appurtenances shall be capable of supporting a minimum dead weight of 5,400 pounds per worker.

(5) "Lanyard" means a rope, suitable for supporting one person. One end is fastened to a safety belt or harness and the other end is secured to a substantial object or a safety line.

(6) "Lifeline" means a rope, suitable for supporting one person, to which a lanyard or safety belt (or harness) is attached.

(7) "O.D." means optical density and refers to the light refractive characteristics of a lens.

(8) "Radiant energy" means energy that travels outward in all directions from its source.

(9) "Safety belt" means a device, usually worn around the waist which, by reason of its attachment to a lanyard and lifeline or a structure, will prevent a worker from falling.

[Statutory Authority: RCW 49.17.040 and 49.17.050. 86-03-074 (Order 86-14), § 296-155-201, filed 1/21/86; Order 76-6, § 296-155-201, filed 3/1/76.]

WAC 296-155-203 Confined spaces. All work conducted in a confined space shall comply with the provisions of chapter 296-62 WAC Part M, and the following sections.

[Statutory Authority: Chapter 49.17 RCW. 94-15-096 (Order 94-07), § 296-155-203, filed 7/20/94, effective 9/20/94. Statutory Authority: RCW 49.17.040 and 49.17.050. 86-03-074 (Order 86-14), § 296-155-203, filed 1/21/86.]

WAC 296-155-20301 Definitions. Confined space means a space that:

(1) Is large enough and so configured that an employee can bodily enter and perform assigned work; and

(2) Has limited or restricted means for entry or exit (for example, tanks, vessels, silos, storage bins, hoppers, vaults, and pits are spaces that may have limited means of entry); and

(3) Is not designed for continuous employee occupancy.

"Corrosives" means substances which in contact with living tissue cause destruction of the tissue by chemical action.

"Hazardous atmosphere" means an atmosphere that may expose employees to the risk of death, incapacitation, impairment of ability to self-rescue (that is, escape unaided from a permit space), injury, or acute illness from one or more of the following causes:

(1) Flammable gas, vapor, or mist in excess of ten percent of its lower flammable limit (LFL);

(2) Airborne combustible dust at a concentration that meets or exceeds its LFL;

Note: This concentration may be approximated as a condition in which the dust obscures vision at a distance of five feet (1.52m) or less.

(3) Atmospheric oxygen concentration below 19.5 percent or above 23.5 percent;

(4) Atmospheric concentration of any substance for which a dose or a permissible exposure limit is published in chapter 296-62 WAC, general occupational health standards, and which could result in employee exposure in excess of its dose or permissible exposure limit;

Note: An atmospheric concentration of any substance that is not capable of causing death, incapacitation, impairment of ability to self-rescue, injury, or acute illness due to its health effects is not covered by this provision.

(5) Any other atmospheric condition that is immediately dangerous to life or health.

Note: For air contaminants for which WISHA has not determined a dose or permissible exposure limit, other sources of information, such as material safety data sheets that comply with the Chemical Hazard Communication Standard, WAC 296-800-170, published information, and internal documents can provide guidance in establishing acceptable atmospheric conditions.

"Irritants" means substances which on immediate, prolonged, or repeated contact with normal living tissue will induce a local inflammatory reaction.

"Oxygen deficient atmospheres" means atmospheres at sea level having less than 19.5% oxygen by volume or having a partial pressure of 148 millimeters of mercury or less. This may deviate when working at higher altitudes and should be determined for an individual location. Factors such as acclimatization, physical condition of persons involved, etc., must be considered for such circumstances and conditions. (See chapter 296-62 WAC, Part M, permit-required confined spaces.)

"Toxicants" means substances which have the inherent capacity to produce personal injury or illness to persons by absorption through any body surface.

[Statutory Authority: RCW 49.17.010, [49.17].040, and [49.17].050. 01-11-038, § 296-155-20301, filed 5/9/01, effective 9/1/01. Statutory Authority: RCW 49.17.040, [49.17].050 and [49.17].060. 95-17-036, § 296-155-20301, filed 8/9/95, effective 9/25/95. Statutory Authority: Chapter 49.17 RCW. 95-04-007, § 296-155-20301, filed 1/18/95, effective 3/1/95; 91-24-017 (Order 91-07), § 296-155-20301, filed 11/22/91, effective 12/24/91. Statutory Authority: RCW 49.17.040 and 49.17.050. 86-03-074 (Order 86-14), § 296-155-20301, filed 1/21/86.]

WAC 296-155-20307 Confined space work on sewer systems under construction. New systems under construction or new installations which have not yet been connected to a used system, may substitute forced ventilation for the testing requirements of chapter 296-62 WAC Part M provided:

(1) Ventilation is effectively provided at least five minutes prior to entry into the confined space;

(2) Ventilation is provided, as required by WAC 296-62-110, et seq., which supplies a continuous flow of air;

(3) Ventilation exhaust is discharged so as to present no hazard to other employees;

(4) An attendant is provided at the surface when there are employees in the manhole or pipe. The attendant shall not leave the manhole unattended until such time as all employees are out and the cover has been replaced; and

(5) All other requirements for confined spaces are observed. See chapter 296-62 WAC Part M.

[Statutory Authority: Chapter 49.17 RCW. 94-15-096 (Order 94-07), § 296-155-20307, filed 7/20/94, effective 9/20/94. Statutory Authority: RCW 49.17.040 and 49.17.050. 86-03-074 (Order 86-14), § 296-155-20307, filed 1/21/86.]

WAC 296-155-205 Head protection. (1) All employees on any construction site shall be provided an individual hard hat which meets all requirements of (a) and (b) of this subsection. Employers shall provide individual hard hats at no cost to the employees.

(a) Hard hats for the protection of employees against impact and/or penetration of falling and flying objects shall meet the specifications contained in American National Standards Institute, Z89.1-1969, Safety Requirements for Industrial Head Protection.

(b) Hard hats for the head protection of employees exposed to high voltage electrical shock and burns shall meet the specifications contained in American National Standards Institute, Z89.2-1971.

(2) All employees must have their individual hard hats on site and readily available at all times.

(3) All employees shall wear a hard hat on any construction site whenever there is a potential exposure to danger of flying or falling objects to persons working or occupying the area.

Note: The hard hat may be removed whenever there is no potential exposure to a hazard.

(4)(a) Employees working on asphalt paving crews exposed to extreme temperatures from hot mix and not exposed to falling objects do not have to wear protective hard hats.

(b) Flaggers working with asphalt paving operations must comply with the requirements of WAC 296-155-305.

(5) Caps with metal buttons or metal visors shall not be worn around electrical hazards.

(6) Employees working near moving machinery or in locations which present a hair-catching or fire hazard shall wear caps, nets or other head and face protection that will completely contain the hair.

[Statutory Authority: RCW 49.17.010, [49.17].040, [49.17].050, 2000 c 239, and chapter 34.05 RCW. 01-04-015, § 296-155-205, filed 1/26/01, effective 2/28/01. Statutory Authority: Chapter 49.17 RCW. 91-11-070 (Order 91-01), § 296-155-205, filed 5/20/91, effective 6/20/91; 89-11-035 (Order 89-03), § 296-155-205, filed 5/15/89, effective 6/30/89. Statutory Authority: RCW 49.17.040 and 49.17.050. 86-03-074 (Order 86-14), § 296-155-205, filed 1/21/86; Order 74-26, § 296-155-205, filed 5/7/74, effective 6/6/74.]

WAC 296-155-210 Hearing protection. The hearing protection requirements of chapter 296-817 WAC, Hearing loss prevention (noise), apply.

[Statutory Authority: RCW 49.17.010, 49.17.040, 49.17.050, and 49.17.060. 03-11-060, § 296-155-210, filed 5/19/03, effective 8/1/03. Statutory Authority: RCW 49.17.040 and 49.17.050. 83-24-013 (Order 83-34), § 296-155-210, filed 11/30/83; Order 74-26, § 296-155-210, filed 5/7/74, effective 6/6/74.]

WAC 296-155-211 Leg protection. Employees whose duties require them to operate a power chain saw shall wear flexible ballistic nylon pads, sewn or otherwise fastened into the trousers, or other equivalent protection that will protect the vulnerable areas of the legs.

[Statutory Authority: RCW 49.17.040 and 49.17.050. 86-03-074 (Order 86-14), § 296-155-211, filed 1/21/86.]

WAC 296-155-212 Foot protection. (1) Substantial footwear, made of leather or other equally firm material, shall be worn by employees in any occupation in which there is a danger of injury to the feet through falling or moving objects, or from burning, scalding, cutting, penetration, or like hazard.

(a) The soles and heels of such footwear shall be of a material that will not create a slipping hazard.

(b) Shoes made of leather or other firm materials that have soft athletic-type soles which would protect employees

from foot injuries and at the same time, provide soft and firm footing while working under specialty requirements or with specialty materials are acceptable if meeting safety shoe requirements established by OSHA or ANSI.

(c) Footwear that has deteriorated to a point where it does not provide the required protection shall not be used.

(2) Calks or other suitable footwear, which will afford reasonable protection from slipping, shall be worn while working on logs, poles, pilings, or similar forest products.

(3) Traditional tennis shoes, shoes with canvas tops, or thin or soft soled athletic shoes, open toed sandals, slippers, dress shoes or other similar type shoes shall not be worn. Soft or athletic-type soles with uppers of leather or other substantial material may be used where firm footing is desired and where minimal danger of injury to feet from falling or moving objects.

(4) Safety-toe footwear for employees shall meet the requirements and specifications in American National Standard for Men's Safety-Toe Footwear, Z41.1-1967.

[Statutory Authority: Chapter 49.17 RCW. 94-15-096 (Order 94-07), § 296-155-212, filed 7/20/94, effective 9/20/94; 89-11-035 (Order 89-03), § 296-155-212, filed 5/15/89, effective 6/30/89. Statutory Authority: RCW 49.17.040 and 49.17.050. 86-03-074 (Order 86-14), § 296-155-212, filed 1/21/86; Order 74-26, § 296-155-212, filed 5/7/74, effective 6/6/74.]

WAC 296-155-215 Eye and face protection. (1) General.

(a) Employees shall use eye and face protection equipment when machines or operations present potential eye or face injury from physical, chemical, or radiation agents.

(b) Eye and face protection equipment required by this part shall meet the requirements specified in American National Standards Institute, Z87.1-1968, Practice for Occupational and Educational Eye and Face Protection.

(c) Employees whose vision requires the use of corrective lenses in spectacles, when required by this regulation to wear eye protection, shall be protected by goggles or spectacles of one of the following types:

(i) Spectacles whose protective lenses provide optical correction;

(ii) Goggles that can be worn over corrective spectacles without disturbing the adjustment of the spectacles.

(iii) Goggles that incorporate corrective lenses mounted behind the protective lenses.

(d) Face and eye protection equipment shall be kept clean and in good repair. The use of this type equipment with structural or optical defects shall be prohibited.

(e) Table C-1 shall be used as a guide in the selection of face and eye protection for the hazards and operations noted.

(f) Protectors shall meet the following minimum requirements:

(i) They shall provide adequate protection against the particular hazards for which they are designed.

(ii) They shall be reasonably comfortable when worn under the designated conditions.

(iii) They shall fit snugly and shall not unduly interfere with the movements of the wearer.

(iv) They shall be durable.

(v) They shall be capable of being disinfected.

(vi) They shall be easily cleanable.

(g) Every protector shall be distinctly marked to facilitate identification only of the manufacturer.

(h) When limitations or precautions are indicated by the manufacturer, they shall be transmitted to the user and care taken to see that such limitations and precautions are strictly observed.

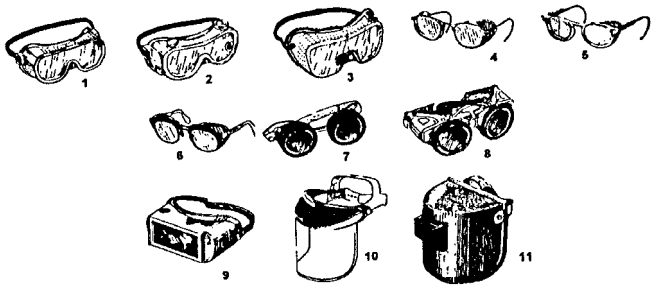

TABLE C-1

EYE AND FACE PROTECTION SELECTION GUIDE

1. GOGGLES, flexible fitting, regular ventilation
2. GOGGLES, flexible fitting, hooded ventilation
3. GOGGLES, cushioned fitting, rigid body
*4. SPECTACLES, metal frame, with sideshields
*5. SPECTACLES, plastic frame with sideshields
*6. SPECTACLES, metal-plastic frame, with sideshields
**7. WELDING GOGGLES, eyecup type, tinted lenses (illustrated)
7A. CHIPPING GOGGLES, eyecup type, clear safety lenses (not illustrated)
**8. WELDING GOGGLES, coverspec type tinted lenses (illustrated)
8A. CHIPPING GOGGLES, coverspec type, clear safety lenses (not illustrated)
**9. WELDING GOGGLES, coverspec type, tinted plate lens
10. FACE SHIELD (available with plastic or mesh window)
11. WELDING HELMETS

* Nonside shield spectacles are available for limited hazard use requiring only frontal protection.

** See Table C-2 in (2) of this section, Filter lens shade numbers for protection against radiant energy.

APPLICATIONS		
OPERATION	HAZARDS	RECOMMENDED PROTECTORS: Underscored Numbers Signify Preferred Protection
ACETYLENE-BURNING ACETYLENE-CUTTING ACETYLENE-WELDING	SPARKS, HARMFUL RAYS, MOLTEN METAL, FLYING PARTICLES	7, 8, 9
CHEMICAL HANDLING	SPLASH, ACID BURNS, FUMES	2, 10 (for severe exposure add 10 over 2)
CHIPPING	FLYING PARTICLES	1, 3, 4, 5, 6, 7A, 8A
ELECTRIC (ARC) WELDING	SPARKS, INTENSE RAYS, MOLTEN METAL	9, 11 (11 in combination with 4, 5, 6, in tinted lenses, advisable)
FURNACE OPERATIONS	GLARE, HEAT, MOLTEN METAL	7, 8, 9 (for severe exposure add 10)
GRINDING-LIGHT	FLYING PARTICLES	1, 3, 4, 5, 6, 10
GRINDING-HEAVY	FLYING PARTICLES	1, 3, 7A, 8A (for severe exposure add 10)
LABORATORY	CHEMICAL SPLASH, GLASS BREAKAGE	2 (10 when in combination with 4, 5, 6)
MACHINING	FLYING PARTICLES	1, 3, 4, 5, 6, 10
MOLTEN METALS	HEAT, GLARE, SPARKS, SPLASH	7, 8 (10 in combination with 4, 5, 6, in tinted lenses)
SPOT WELDING	FLYING PARTICLES, SPARKS	1, 3, 4, 5, 6, 10

(2) Protection against radiant energy. (a) Selection of shade numbers for welding filter. Table C-2 shall be used as a guide for the selection of the proper shade numbers of filter lenses or plates used in welding. Shades more dense than those listed may be used to suit the individual's needs.

TABLE C-2
FILTER LENS SHADE NUMBERS FOR PROTECTION AGAINST RADIANT ENERGY

Welding Operation	Shade number
Shielded metal-arc welding 1/16-, 3/32-, 1/8-, 5/32-inch diameter electrodes	10
Gas-shielded arc welding (nonferrous) 1/16-, 3/32-, 1/8-, 5/32-inch diameter electrodes	11
Gas-shielded arc welding (ferrous) 1/16-, 3/32-, 1/8-, 5/32-inch diameter electrodes	12
Shielded metal-arc welding 3/16-, 7/32-, 1/4-inch diameter electrodes	12
5/16-, 3/8-inch diameter electrodes	14
Atomic hydrogen welding	10-14
Carbon-arc welding	14
Soldering	2
Torch brazing	3 or 4
Light cutting, up to 1 inch	3 or 4
Medium cutting, 1 inch to 6 inches	4 or 5
Heavy cutting, over 6 inches	5 or 6
Gas welding (light), up to 1/8-inch	4 or 5
Gas welding (medium), 1/8-inch to 1/2-inch	5 or 6
Gas welding (heavy), over 1/2-inch	6 or 9

(b) Laser protection.

(i) Employees whose occupation or assignment requires potentially hazardous exposure (see WAC 296-62-09005(4)) to laser radiation shall wear suitable laser safety goggles which will protect for the specific wavelength of the laser and be of optical density (O.D.) adequate for the energy involved. Table C-3 lists the maximum power or energy density for which adequate protection is afforded by glasses of optical densities from 5 through 8.

TABLE C-3
SELECTING LASER SAFETY GLASS

INTENSITY	ATTENUATION	
CW maximum power density (watts/cm^2)	Optical density (O.D.)	Attenuation factor
10^{-2}	5	10^5
10^{-1}	6	10^6
1.0	7	10^7
10.0	8	10^8

Output levels falling between lines in this table shall require the higher optical density.

(ii) All protective goggles shall bear a label identifying the following data:

(a) The laser wavelengths for which use is intended;

(b) The optical density of those wavelengths.

(c) The visible light transmission.

[Statutory Authority: Chapter 49.17 RCW. 94-15-096 (Order 94-07), § 296-155-215, filed 7/20/94, effective 9/20/94. Statutory Authority: RCW 49.17.040 and 49.17.050. 85-01-022 (Order 84-24), § 296-155-215, filed 12/11/84; Order 74-26, § 296-155-215, filed 5/7/74, effective 6/6/74.]

WAC 296-155-220 Respiratory protection. The respiratory protection requirements applicable to construction work under this section are identical to those set forth in chapter 296-62 WAC, Part E.

[Statutory Authority: RCW 49.17.010, [49.17].040 and [49.17].050. 99-10-071, § 296-155-220, filed 5/4/99, effective 9/1/99. Statutory Authority: RCW 49.17.040 and 49.17.050. 83-15-017 (Order 83-19), § 296-155-220, filed 7/13/83, effective 9/12/83; Order 74-26, § 296-155-220, filed 5/7/74, effective 6/6/74.]

WAC 296-155-235 Working over or adjacent to water. (1) When an employee is employed under conditions which expose them to a risk of drowning, they shall wear a U.S. Coast Guard approved life saving device, unless it can be shown that conditions, such as shallow water, are such that flotation would not be achieved.

(2) Prior to and after each use, the buoyant life saving device shall be inspected for defects which would alter their strength or buoyancy. Defective units shall not be used.

(3) Ring buoys with at least 90 feet of line shall be provided and readily available for emergency rescue operations. Distance between ring buoys shall not exceed 200 feet.

(4) At least one lifesaving skiff shall be immediately available at locations where employees are working over or adjacent to water. Each skiff, or skiffs, shall:

(a) Be suitable for conditions where used.

(b) Be equipped with oar locks securely attached to gunwales, oars, one boat hook, and one cork ring buoy with fifty feet of suitable line attached.

(5) Whenever boats or skiffs cannot be used, due to swift currents, life lines close to the water surface shall be provided and, wherever practicable, a line shall be stretched across the stream with tag lines.

(6) Where workers are transported by boat or barge, only such number of persons shall be carried that can be safely accommodated on fixed seats. Capacity showing number of persons shall be plainly marked on vessel.

(7) All workers shall be provided with a U.S. Coast Guard approved buoyant life saving device while transported in open boats and/or barges, and where deemed necessary by the department, workers shall wear same while in transport.

[Statutory Authority: Chapter 49.17 RCW. 94-15-096 (Order 94-07), § 296-155-235, filed 7/20/94, effective 9/20/94; Order 74-26, § 296-155-235, filed 5/7/74, effective 6/6/74.]

WAC 296-155-240 Sterilization of protective equipment. Goggles, gloves, respirators and other protectors shall not be interchanged among employees for use unless they have been thoroughly cleaned since last use.

[Order 74-26, § 296-155-240, filed 5/7/74, effective 6/6/74.]

PART C-1
FALL RESTRAINT AND FALL ARREST

WAC 296-155-245 Reserve.

[Statutory Authority: RCW 49.17.040, [49.17.]050 and [49.17.]060. 96-24-051, § 296-155-245, filed 11/27/96, effective 2/1/97. Statutory Authority: Chapter 49.17 RCW. 95-10-016, § 296-155-245, filed 4/25/95, effective 10/1/95.]

WAC 296-155-24501 Scope and application. This section sets forth requirements for employers to provide and enforce the use of fall protection for employees in construction, alteration, repair, maintenance (including painting and decorating), demolition workplaces, and material handling covered under chapter 296-155 WAC.

Note: See Appendix B for additional standards that require the use of fall restraint and/or fall arrest protection.

[Statutory Authority: RCW 49.17.010, [49.17].040, and [49.17].050. 00-14-058, § 296-155-24501, filed 7/3/00, effective 10/1/00. Statutory Authority: RCW 49.17.040, [49.17.]050 and [49.17.]060. 96-24-051, § 296-155-24501, filed 11/27/96, effective 2/1/97. Statutory Authority: Chapter 49.17 RCW. 95-10-016, § 296-155-24501, filed 4/25/95, effective 10/1/95; 91-03-044 (Order 90-18), § 296-155-24501, filed 1/10/91, effective 2/12/91.]

WAC 296-155-24503 Definitions. Anchorage means a secure point of attachment for lifelines, lanyards, or deceleration devices which is capable of withstanding the forces specified in the applicable sections of chapter 296-155 WAC.

Approved means, for the purpose of this section; tested and certified by the manufacturer, or any recognized national testing laboratory, to possess the strength requirements specified in this section.

Body belt means a Type 1 safety belt used in conjunction with lanyard or lifeline for fall restraint only.

Full body harness means a configuration of connected straps to distribute a fall arresting force over at least the thighs, shoulders and pelvis, with provisions for attaching a lanyard, lifeline, or deceleration devices.

Full body harness system means a Class III full body harness and lanyard which is attached to an anchorage meeting the requirements of chapter 296-155 WAC, Part C-1; or attached to a horizontal or vertical lifeline which is properly secured to an anchorage(s) capable of withstanding the forces specified in the applicable sections of chapter 296-155 WAC.

Catenary line - see horizontal lifeline.

Competent person means an individual knowledgeable of fall protection equipment, including the manufacturers recommendations and instructions for the proper use, inspection, and maintenance; and who is capable of identifying existing and potential fall hazards; and who has the authority to take prompt corrective action to eliminate those hazards; and who is knowledgeable of the rules contained in this section regarding the erection, use, inspection, and maintenance of fall protection equipment and systems.

Connector means a device which is used to couple (connect) parts of the personal fall arrest system and positioning device systems together. It may be an independent component of the system, such as a carabiner, or it may be an integral component of part of the system (such as a buckle or dee ring sewn into a body belt or body harness, or a snap hook spliced or sewn to a lanyard or self-retracting lanyard).

Continuous fall protection means the design and use of a fall protection system such that no exposure to an elevated fall hazard occurs. This may require more than one fall protection system or a combination of prevention or protection measures.

Control zone means the area between the warning line and the unprotected sides and edges of the walking/working surface.

Deceleration device means any mechanism, such as a rope grab, ripstitch lanyard, specifically woven lanyard, tearing or deforming lanyards, automatic self-retracting lifelines/lanyards, etc., which serves to dissipate a substantial amount of energy during a fall arrest, or otherwise limit the energy imposed on an employee during fall arrest.

Deceleration distance means the additional vertical distance a falling employee travels, excluding lifeline elongation and free fall distance, before stopping, from the point at which the deceleration device begins to operate. It is measured as the distance between the location of an employee's body belt or body harness attachment point at the moment of activation (at the onset of fall arrest forces) of the deceleration device during a fall, and the location of that attachment point after the employee comes to a full stop.

Drop line means a vertical lifeline secured to an upper anchorage for the purpose of attaching a lanyard or device.

Failure means load refusal, breakage, or separation of component parts. Load refusal is the point where the ultimate strength is exceeded.

Fall arrest system means the use of multiple, approved safety equipment components such as; body harnesses, lanyards, deceleration devices, droplines, horizontal and/or vertical lifelines and anchorages, interconnected and rigged as to arrest a free fall. Compliance with anchorage strength requirements specified in the applicable sections of chapter 296-155 WAC, Part C-1 shall constitute approval of the anchorage.

Fall protection work plan means a written planning document in which the employer identifies all areas on the job site where a fall hazard of 10 feet or greater exists. The plan describes the method or methods of fall protection to be utilized to protect employees, and includes the procedures governing the installation use, inspection, and removal of the fall protection method or methods which are selected by the employer. (See WAC 296-155-24505.)

Fall restraint system means an approved device and any necessary components that function together to restrain an employee in such a manner as to prevent that employee from falling to a lower level. When standard guardrails are selected, compliance with applicable sections governing their construction and use shall constitute approval.

Fall distance means the actual distance from the worker's support to the level where a fall would stop.

Free fall means the act of falling before a personal fall arrest system begins to apply force to arrest the fall.

Free fall distance means the vertical displacement of the fall arrest attachment point on the employee's body belt or body harness between onset of the fall and just before the system begins to apply force to arrest the fall. This distance excludes deceleration distance, and lifeline/lanyard elongation, but includes any deceleration device slide distance or self-retracting lifeline/lanyard extension before they operate and fall arrest forces occur.

Hardware means snap hooks, D rings, bucklers, carabiners, adjusters, O rings, that are used to attach the components of a fall protection system together.

Horizontal lifeline means a rail, rope, wire, or synthetic cable that is installed in a horizontal plane between two anchorages and used for attachment of a worker's lanyard or lifeline device while moving horizontally; used to control dangerous pendulum like swing falls.

Lanyard means a flexible line of webbing, rope, or cable used to secure a body belt or harness to a lifeline or an anchorage point usually 2, 4, or 6 feet long.

Leading edge means the advancing edge of a floor, roof, or formwork which changes location as additional floor, roof, or formwork sections are placed, formed, or constructed. Leading edges not actively under construction are considered

to be "unprotected sides and edges," and positive methods of fall arrest or fall restraint shall be required to protect exposed workers.

Lifeline means a vertical line from a fixed anchorage or between two horizontal anchorages, independent of walking or working surfaces, to which a lanyard or device is secured. Lifeline as referred to in this text is one which is part of a fall protection system used as back-up safety for an elevated worker.

Locking snap hook means a connecting snap hook that requires two separate forces to open the gate; one to deactivate the gatekeeper and a second to depress and open the gate which automatically closes when released; used to minimize roll out or accidental disengagement.

Low pitched roof means a roof having a slope equal to or less than 4 in 12.

Mechanical equipment means all motor or human propelled wheeled equipment except for wheelbarrows, mopcarts, robotic thermoplastic welders and robotic crimpers.

Positioning belt means a single or multiple strap that can be secured around the worker's body to hold the user in a work position; for example, a lineman's belt, a rebar belt, or saddle belt.

Positioning device system means a body belt or body harness system rigged to allow an employee to be supported on an elevated vertical surface, such as a wall, and work with both hands free while leaning.

Restraint line means a line from a fixed anchorage or between two anchorages to which an employee is secured in such a way as to prevent the worker from falling to a lower level.

Roll out means unintentional disengagement of a snap hook caused by the gate being depressed under torque or contact while twisting or turning; a particular concern with single action snap hooks that do not have a locking gatekeeper.

Roof means the exterior surface on the top of a building. This does not include floors or form work which, because a building has not been completed, temporarily become the top surface of a building.

Roofing work means the hoisting, storage, application, and removal of roofing materials and equipment, including related insulation, sheet metal, and vapor barrier work, but not including the construction of the roof deck.

Rope grab means a fall arrester that is designed to move up or down a lifeline suspended from a fixed overhead or horizontal anchorage point, or lifeline, to which the belt or harness is attached. In the event of a fall, the rope grab locks onto the lifeline rope through compression to arrest the fall. The use of a rope grab device is restricted for all restraint applications. (Refer to WAC 296-155-24510 (1)(b)(iii)).

Safety line - see lifeline.

Safety monitor system means a system of fall restraint used in conjunction with a warning line system only, where a competent person as defined by this part, having no additional duties, monitors the proximity of workers to the fall hazard when working between the warning line and the unprotected sides and edges including, the leading edge of a low pitched roof or walking/working surface.

Self retracting lifeline means a deceleration device which contains a drum wound line which may be slowly extracted from, or retracted onto, the drum under slight tension during normal employee movement, and which after onset of a fall, automatically locks the drum and arrests the fall.

Shock absorbing lanyard means a flexible line of webbing, cable, or rope used to secure a body belt or harness to a lifeline or anchorage point that has an integral shock absorber.

Single action snap hook means a connecting snap hook that requires a single force to open the gate which automatically closes when released.

Snap hook means a self-closing connecting device with a gatekeeper latch or similar arrangement that will remain closed until manually opened. This includes single action snap hooks that open when the gatekeeper is depressed and double action snap hooks that require a second action on a gatekeeper before the gate can be opened.

Static line - see horizontal lifeline.

Strength member means any component of a fall protection system that could be subject to loading in the event of a fall.

Steep roof means a roof having a slope greater than 4 in 12.

Unprotected sides and edges means any side or edge (except at entrances to points of access) of a floor, roof, ramp or runway where there is no wall or guardrail system as defined in WAC 296-155-505(7).

Walking/working surface means for the purpose of this section, any area whose dimensions are 45 inches or greater in all directions, through which workers pass or conduct work.

Warning line system means a barrier erected on a walking and working surface or a low pitch roof (4 in 12 or less), to warn employees that they are approaching an unprotected fall hazard(s).

Work area means that portion of a walking/working surface where job duties are being performed.

[Statutory Authority: RCW 49.17.010, [49.17].040, and [49.17].050. 00-14-058, § 296-155-24503, filed 7/3/00, effective 10/1/00. Statutory Authority: RCW 49.17.040, [49.17.]050 and [49.17.]060. 96-24-051, § 296-155-24503, filed 11/27/96, effective 2/1/97. Statutory Authority: Chapter 49.17 RCW. 95-10-016, § 296-155-24503, filed 4/25/95, effective 10/1/95; 91-03-044 (Order 90-18), § 296-155-24503, filed 1/10/91, effective 2/12/91.]

WAC 296-155-24505 Fall protection work plan. (1) The employer shall develop and implement a written fall protection work plan including each area of the work place where the employees are assigned and where fall hazards of 10 feet or more exist.

(2) The fall protection work plan shall:

(a) Identify all fall hazards in the work area.

(b) Describe the method of fall arrest or fall restraint to be provided.

(c) Describe the correct procedures for the assembly, maintenance, inspection, and disassembly of the fall protection system to be used.

(d) Describe the correct procedures for the handling, storage, and securing of tools and materials.

(e) Describe the method of providing overhead protection for workers who may be in, or pass through the area below the work site.

(f) Describe the method for prompt, safe removal of injured workers.

(g) Be available on the job site for inspection by the department.

(3) Prior to permitting employees into areas where fall hazards exist the employer shall:

(a) Ensure that employees are trained and instructed in the items described in subsection (2)(a) through (f) of this section.

(b) Inspect fall protection devices and systems to ensure compliance with WAC 296-155-24510.

(4) Training of employees:

(a) The employer shall ensure that employees are trained as required by this section. Training shall be documented and shall be available on the job site.

(b) "Retraining." When the employer has reason to believe that any affected employee who has already been trained does not have the understanding and skill required by subsection (1) of this section, the employer shall retrain each such employee. Circumstances where retraining is required include, but are not limited to, situations where:

• Changes in the workplace render previous training obsolete; or

• Changes in the types of fall protection systems or equipment to be used render previous training obsolete; or

• Inadequacies in an affected employee's knowledge or use of fall protection systems or equipment indicate that the employee has not retained the requisite understanding or skill.

Note: The following appendices to Part C-1 of this chapter serve as nonmandatory guidelines to assist employers in complying with the appropriate requirements of Part C-1 of this chapter.

[Statutory Authority: RCW 49.17.010, [49.17].040, and [49.17].050. 00-14-058, § 296-155-24505, filed 7/3/00, effective 10/1/00. Statutory Authority: RCW 49.17.040, [49.17.]050 and [49.17.]060. 96-24-051, § 296-155-24505, filed 11/27/96, effective 2/1/97. Statutory Authority: Chapter 49.17 RCW. 95-10-016, § 296-155-24505, filed 4/25/95, effective 10/1/95; 91-03-044 (Order 90-18), § 296-155-24505, filed 1/10/91, effective 2/12/91.]

WAC 296-155-24507 Reserve.

[Statutory Authority: RCW 49.17.040, [49.17.]050 and [49.17.]060. 96-24-051, § 296-155-24507, filed 11/27/96, effective 2/1/97. Statutory Authority: Chapter 49.17 RCW. 95-10-016, § 296-155-24507, filed 4/25/95, effective 10/1/95.]

WAC 296-155-24510 Fall restraint, fall arrest systems. When employees are exposed to a hazard of falling from a location 10 feet or more in height, the employer shall ensure that fall restraint, fall arrest systems or positioning device systems are provided, installed, and implemented according to the following requirements.

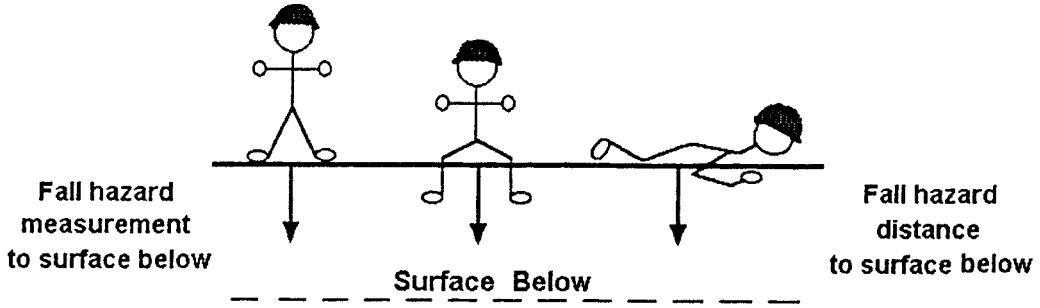

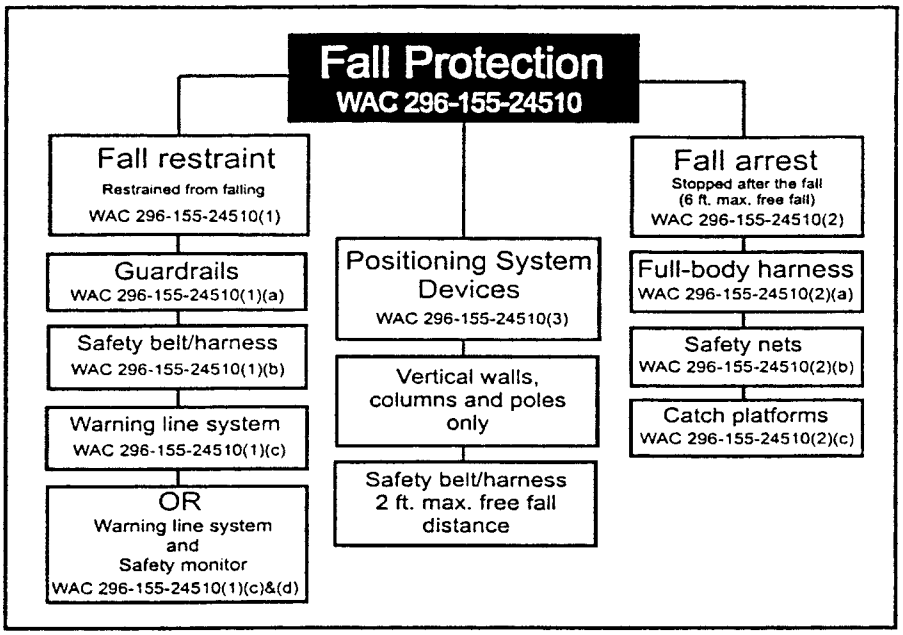

(1) Fall restraint protection shall consist of:

(a) Standard guardrails as described in chapter 296-155 WAC, Part K.

(b) Safety belts and/or harness attached to securely rigged restraint lines.

(i) Safety belts and/or harness shall conform to ANSI Standard:

Class I body belt

Class II chest harness

Class III full body harness

Class IV suspension/position belt

(ii) All safety belt and lanyard hardware assemblies shall be capable of withstanding a tensile loading of 4,000 pounds without cracking, breaking, or taking a permanent deformation.

(iii) Rope grab devices are prohibited for fall restraint applications unless they are part of a fall restraint system designed specifically for the purpose by the manufacturer, and used in strict accordance with the manufacturer's recommendations and instructions.

(iv) The employer shall ensure component compatibility.

(v) Components of fall restraint systems shall be inspected prior to each use for mildew, wear, damage, and other deterioration, and defective components shall be removed from service if their function or strength have been adversely affected.

(vi) Anchorage points used for fall restraint shall be capable of supporting 4 times the intended load.

(vii) Restraint protection shall be rigged to allow the movement of employees only as far as the sides and edges of the walking/working surface.

(c) A warning line system as prescribed in WAC 296-155-24515(3) and supplemented by the use of a safety monitor system as prescribed in WAC 296-155-24521 to protect workers engaged in duties between the forward edge of the warning line and the unprotected sides and edges, including the leading edge, of a low pitched roof or walking/working surface.

(d) Warning line and safety monitor systems as described in WAC 296-155-24515 (3) through (4)(f) and 296-155-24520 respectively are prohibited on surfaces exceeding a 4 in 12 pitch, and on any surface whose dimensions are less than 45 inches in all directions.

(2) Fall arrest protection shall consist of:

(a) Full body harness system.

(i) An approved Class III full body harness shall be used.

(ii) Body harness systems or components subject to impact loading shall be immediately removed from service and shall not be used again for employee protection unless inspected and determined by a competent person to be undamaged and suitable for reuse.

(iii) All safety lines and lanyards shall be protected against being cut or abraded.

(iv) The attachment point of the body harness shall be located in the center of the wearer's back near shoulder level, or above the wearer's head.

(v) Body harness systems shall be rigged to minimize free fall distance with a maximum free fall distance allowed of 6 feet, and such that the employee will not contact any lower level.

(vi) Hardware shall be drop forged, pressed or formed steel, or made of materials equivalent in strength.

(vii) Hardware shall have a corrosion resistant finish, and all surfaces and edges shall be smooth to prevent damage to the attached body harness or lanyard.

(viii) When vertical lifelines (droplines) are used, not more than one employee shall be attached to any one lifeline.

Note: The system strength needs in the following items are based on a total combined weight of employee and tools of no more than 310 pounds. If combined weight is more than 310 pounds, appropriate allowances must be made or the system will not be deemed to be in compliance.

(ix) Full body harness systems shall be secured to anchorages capable of supporting 5,000 pounds per employee except: When self retracting lifelines or other deceleration devices are used which limit free fall to two feet, anchorages shall be capable of withstanding 3,000 pounds.

(x) Vertical lifelines (droplines) shall have a minimum tensile strength of 5,000 pounds (22.2 kN), except that self retracting lifelines and lanyards which automatically limit free fall distance to two feet (.61 m) or less shall have a minimum tensile strength of 3,000 pounds (13.3 kN).

(xi) Horizontal lifelines shall be designed, installed, and used, under the supervision of a qualified person, as part of a complete personal fall arrest system, which maintains a safety factor of at least two.

(xii) Lanyards shall have a minimum tensile strength of 5,000 pounds (22.2 kN).

(xiii) All components of body harness systems whose strength is not otherwise specified in this subsection shall be capable of supporting a minimum fall impact load of 5,000 pounds (22.2 kN) applied at the lanyard point of connection.

(xiv) Dee-rings and snap-hooks shall be proof-tested to a minimum tensile load of 3,600 pounds (16 kN) without cracking, breaking, or taking permanent deformation.

(xv) Snap-hooks shall be a locking type snap-hook designed and used to prevent disengagement of the snap-hook by the contact of the snap-hook keeper by the connected member.

(xvi) Unless the snap-hook is designed for the following connections, snap-hooks shall not be engaged:

(A) Directly to webbing, rope or wire rope;

(B) To each other;

(C) To a dee-ring to which another snap-hook or other connector is attached;

(D) To a horizontal lifeline; or

(E) To any object which is incompatibly shaped or dimensioned in relation to the snap-hook such that unintentional disengagement could occur by the connected object being able to depress the snap-hook keeper and release itself.

(xvii) Full body harness systems shall be inspected prior to each use for mildew, wear, damage, and other deterioration, and defective components shall be removed from service if their function or strength have been adversely affected.

(b) Safety net systems. Safety net systems and their use shall comply with the following provisions:

(i) Safety nets shall be installed as close as practicable under the surface on which employees are working, but in no case more than 30 feet (9.1 m) below such level unless specifically approved in writing by the manufacturer. The potential fall area to the net shall be unobstructed.

(ii) Safety nets shall extend outward from the outermost projection of the work surface as follows:

Vertical distance from working level to horizontal plane of net	Minimum required horizontal distance of outer edge of net from the edge of the working surface
Up to 5 feet	8 feet
More than 5 feet up to 10 feet . .	10 feet
More than 10 feet	13 feet

(iii) Safety nets shall be installed with sufficient clearance under them to prevent contact with the surface or structures below when subjected to an impact force equal to the drop test specified in (b)(iv) of this subsection.

(iv) Safety nets and their installations shall be capable of absorbing an impact force equal to that produced by the drop test specified in (b)(iv)(A) and (B) of this subsection.

(A) Except as provided in (b)(iv)(B) of this subsection, safety nets and safety net installations shall be drop-tested at the job site after initial installation and before being used as a fall protection system, whenever relocated, after major repair, and at 6-month intervals if left in one place. The drop-test shall consist of a 400 pound (180 kg) bag of sand 30 ± 2 inches (76 ± 5 cm) in diameter dropped into the net from the highest walking/working surface at which employees are exposed to fall hazards, but not from less than 42 inches (1.1 m) above that level.

(B) When the employer can demonstrate that it is unreasonable to perform the drop-test required by (b)(iv)(A) of this subsection, the employer (or a designated competent person) shall certify that the net and net installation is in compliance with the provisions of (b)(iii) and (b)(iv)(A) of this subsection by preparing a certification record prior to the net being used as a fall protection system. The certification record must include an identification of the net and net installation for which the certification record is being prepared; the date that it was determined that the identified net and net installation were in compliance with (b)(iii) of this subsection and the signature of the person making the determination and certification. The most recent certification record for each net and net installation shall be available at the job site for inspection.

(v) Defective nets shall not be used. Safety nets shall be inspected at least once a week for wear, damage, and other deterioration. Defective components shall be removed from service. Safety nets shall also be inspected after any occurrence which could affect the integrity of the safety net system.

(vi) Materials, scrap pieces, equipment, and tools which have fallen into the safety net shall be removed as soon as possible from the net and at least before the next work shift.

(vii) The maximum size of each safety net mesh opening shall not exceed 36 square inches (230 cm^2) nor be longer than 6 inches (15 cm) on any side, and the opening, measured center-to-center of mesh ropes or webbing, shall not be longer than 6 inches (15 cm). All mesh crossings shall be secured to prevent enlargement of the mesh opening.

(viii) Each safety net (or section of it) shall have a border rope for webbing with a minimum breaking strength of 5,000 pounds (22.2 kN).

(ix) Connections between safety net panels shall be as strong as integral net components and shall be spaced not more than 6 inches (15 cm) apart.

(c) Catch platforms.

(i) A catch platform shall be installed within 10 vertical feet of the work area.

(ii) The catch platforms width shall equal the distance of the fall but shall be a minimum of 45 inches wide and shall be equipped with standard guardrails on all open sides.

(3) Positioning device systems. Positioning device systems and their use shall conform to the following provisions:

(a) Positioning devices shall be rigged such that an employee cannot free fall more than 2 feet (.61 m).

(b) Positioning devices shall be secured to an anchorage capable of supporting at least twice the potential impact load of an employee's fall or 3,000 pounds (13.3 kN), whichever is greater.

(c) Connectors shall be drop forged, pressed or formed steel, or made of equivalent materials.

(d) Connectors shall have a corrosion-resistant finish, and all surfaces and edges shall be smooth to prevent damage to interfacing parts of this system.

(e) Connecting assemblies shall have a minimum tensile strength of 5,000 pounds (22.2 kN).

(f) Dee-rings and snap-hooks shall be proof-tested to a minimum tensile load of 3,600 pounds (16 kN) without cracking, breaking, or taking permanent deformation.

(g) Snap-hooks shall be a locking type snap-hook designed and used to prevent disengagement of the snap-hook by the contact of the snap-hook keeper by the connected member.

(h) Unless the snap-hook is designed for the following connections, snap-hooks shall not be engaged:

(i) Directly to webbing, rope or wire rope;

(ii) To each other;

(iii) To a dee-ring to which another snap-hook or other connector is attached;

(iv) To a horizontal lifeline; or

(v) To any object which is incompatibly shaped or dimensioned in relation to the snap-hook such that unintentional disengagement could occur by the connected object being able to depress the snap-hook keeper and release itself.

(i) Positioning device systems shall be inspected prior to each use for wear, damage, and other deterioration, and defective components shall be removed from service.

(j) Body belts, harnesses, and components shall be used only for employee protection (as part of a personal fall arrest system or positioning device system) and not to hoist materials.

(4) Droplines or lifelines used on rock scaling operations, or in areas where the lifeline may be subjected to cutting or abrasion, shall be a minimum of 7/8 inch wire core manila rope. For all other lifeline applications, a minimum of 3/4 inch manila or equivalent, with a minimum breaking strength of 5,000 pounds, shall be used.

(5) Safety harnesses, lanyards, lifelines or droplines, independently attached or attended, shall be used while performing the following types of work when other equivalent type protection is not provided:

(a) Work performed in permit required confined spaces and other confined spaces shall follow the procedures as described in chapter 296-62 WAC, Part M.

(b) Work on hazardous slopes, or dismantling safety nets, working on poles or from boatswains chairs at elevations greater than six feet (1.83 m), swinging scaffolds or other unguarded locations.

(c) Work on skips and platforms used in shafts by crews when the skip or cage does not occlude the opening to within one foot (30.5 cm) of the sides of the shaft, unless cages are provided.

(6) Canopies, when used as falling object protection, shall be strong enough to prevent collapse and to prevent penetration by any objects which may fall onto the canopy.

[Statutory Authority: RCW 49.17.010, [49.17].040, and [49.17].050. 00-14-058, § 296-155-24510, filed 7/3/00, effective 10/1/00. Statutory Authority: RCW 49.17.040, [49.17.]050 and [49.17.]060. 96-24-051, § 296-155-24510, filed 11/27/96, effective 2/1/97. Statutory Authority: Chapter 49.17 RCW. 95-10-016, § 296-155-24510, filed 4/25/95, effective 10/1/95; 95-04-007, § 296-155-24510, filed 1/18/95, effective 3/1/95; 93-19-142 (Order 93-04), § 296-155-24510, filed 9/22/93, effective 11/1/93; 91-24-017 (Order 91-07), § 296-155-24510, filed 11/22/91, effective 12/24/91; 91-03-044 (Order 90-18), § 296-155-24510, filed 1/10/91, effective 2/12/91.]

WAC 296-155-24515 Guarding of low pitched roof perimeters. (1) General provisions. During the performance of work on low pitched roofs with a potential fall hazard greater than 10 feet, the employer shall ensure that employees engaged in such work be protected from falling from all unprotected sides and edges of the roof as follows:

(a) By the use of a fall restraint or fall arrest systems, as defined in WAC 296-155-24510; or

(b) By the use of a warning line system erected and maintained as provided in subsection (3) of this section and supplemented for employees working between the warning line and the roof edge by the use of a safety monitor system as described in WAC 296-155-24521.

(c) Mechanical equipment shall be used or stored only in areas where employees are protected by a warning line system, or fall restraint, or fall arrest systems as described in WAC 296-155-24510. Mechanical equipment may not be used or stored where the only protection is provided by the use of a safety monitor.

(2) Exceptions.

(a) The provisions of subsection (1)(a) of this section do not apply at points of access such as stairways, ladders, and ramps, or when employees are on the roof only to inspect, investigate, or estimate roof level conditions. Roof edge materials handling areas and materials storage areas shall be guarded as provided in subsection (4) of this section.

(b) Employees engaged in roofing on low-pitched roofs less than 50 feet wide, may elect to use a safety monitor system without warning lines.

Note: See Appendix A to Part C-1—Determining roof widths nonmandatory guidelines for complying with WAC 296-155-24515 (2)(b).

(3) Warning lines systems.

(a) Warning lines shall be erected around all sides of the work area.

(i) When mechanical equipment is not being used, the warning line shall be erected not less than six feet (1.8 meters) from the edge of the roof.

(ii) When mechanical equipment is being used, the warning line shall be erected not less than six feet (1.8 meters) from the roof edge which is parallel to the direction of mechanical equipment operation, and not less than 10 feet (3.1 meters) from the roof edge which is perpendicular to the direction of mechanical equipment operation.

(b) The warning line shall consist of a rope, wire, or chain and supporting stanchions erected as follows:

(i) The rope, wire, or chain shall be flagged at not more than six foot (1.8 meter) intervals with high visibility material.

(ii) The rope, wire, or chain shall be rigged and supported in such a way that its lowest point (including sag) is no less than 36 inches (91.4 cm) from the roof surface and its

highest point is no more than 42 inches (106.7 cm) from the roof surface.

(iii) After being erected, with the rope, wire or chain attached, stanchions shall be capable of resisting, without tipping over, a force of at least 16 pounds (71 Newtons) applied horizontally against the stanchion, 30 inches (0.76 meters) above the roof surface, perpendicular to the warning line, and in the direction of the roof edge.

(iv) The rope, wire, or chain shall have a minimum tensile strength of 200 pounds (90 kilograms), and after being attached to the stanchions, shall be capable of supporting, without breaking, the loads applied to the stanchions.

(v) The line shall be attached at each stanchion in such a way that pulling on one section of the line between stanchions will not result in slack being taken up in adjacent sections before the stanchion tips over.

(c) Access paths shall be erected as follows:

(i) Points of access, materials handling areas, and storage areas shall be connected to the work area by a clear access path formed by two warning lines.

(ii) When the path to a point of access is not in use, a rope, wire, or chain, equal in strength and height to the warning line, shall be placed across the path at the point where the path intersects the warning line erected around the work area.

(4) Roof edge materials handling areas and materials storage. Employees working in a roof edge materials handling or materials storage area located on a low pitched roof with a ground to eave height greater than 10 feet shall be protected from falling along all unprotected roof sides and edges of the area.

(a) When guardrails are used at hoisting areas, a minimum of four feet of guardrail shall be erected on each side of the access point through which materials are hoisted.

(b) A chain or gate shall be placed across the opening between the guardrail sections when hoisting operations are not taking place.

(c) When guardrails are used at bitumen pipe outlet, a minimum of four feet of guardrail shall be erected on each side of the pipe.

(d) When safety belt/harness systems are used, they shall not be attached to the hoist.

(e) When fall restraint systems are used, they shall be rigged to allow the movement of employees only as far as the roof edge.

(f) Materials shall not be stored within six feet of the roof edge unless guardrails are erected at the roof edge.

[Statutory Authority: RCW 49.17.010, [49.17].040, and [49.17].050. 00-14-058, § 296-155-24515, filed 7/3/00, effective 10/1/00. Statutory Authority: RCW 49.17.040, [49.17.]050 and [49.17.]060. 96-24-051, § 296-155-24515, filed 11/27/96, effective 2/1/97. Statutory Authority: Chapter 49.17 RCW. 95-10-016, § 296-155-24515, filed 4/25/95, effective 10/1/95; 91-24-017 (Order 91-07), § 296-155-24515, filed 11/22/91, effective 12/24/91; 91-03-044 (Order 90-18), § 296-155-24515, filed 1/10/91, effective 2/12/91.]

WAC 296-155-24519 Reserve.

[Statutory Authority: RCW 49.17.040, [49.17.]050 and [49.17.]060. 96-24-051, § 296-155-24519, filed 11/27/96, effective 2/1/97. Statutory Authority: Chapter 49.17 RCW. 95-10-016, § 296-155-24519, filed 4/25/95, effective 10/1/95.]

WAC 296-155-24520 Leading edge control zone. (1) When performing leading edge work, the employer shall ensure that a control zone be established according to the following requirements:

(a) The control zone shall begin a minimum of 6 feet back from the leading edge to prevent exposure by employees who are not protected by fall restraint or fall arrest systems.

(b) The control zone shall be separated from other areas of the low pitched roof or walking/working surface by the erection of a warning line system.

(c) The warning line system shall consist of wire, rope, or chain supported on stanchions, or a method which provides equivalent protection.

(d) The spacing of the stanchions and support of the line shall be such that the lowest point of the line (including sag) is not less than 36 inches from the walking/working surface, and its highest point is not more than 42 inches (106.7 cm) from the walking/working surface.

(e) Each line shall have a minimum tensile strength of 200 pounds (90 kilograms).

(f) Each line shall be flagged or clearly marked with high visibility materials at intervals not to exceed 6 feet.

(g) After being erected with the rope, or chain attached, stanchions shall be capable of resisting without tipping over, a force of at least 16 pounds (71 Newtons) applied horizontally against the stanchions 30 inches (0.76 meters) above the roof surface, perpendicular to the warning line and in the direction of the roof edge.

(2) When positive means of fall restraint as described in WAC 296-155-24510 (1)(a) through (d), or fall arrest as described in WAC 296-155-24510 (2) through (6) are not utilized, a safety monitor system as described in WAC 296-155-24521 shall be implemented to protect employees working between the forward edge of the warning line and the leading edge.

[Statutory Authority: RCW 49.17.010, [49.17].040, and [49.17].050. 00-14-058, § 296-155-24520, filed 7/3/00, effective 10/1/00. Statutory Authority: RCW 49.17.040, [49.17.]050 and [49.17.]060. 96-24-051, § 296-155-24520, filed 11/27/96, effective 2/1/97. Statutory Authority: Chapter 49.17 RCW. 95-10-016, § 296-155-24520, filed 4/25/95, effective 10/1/95; 91-24-017 (Order 91-07), § 296-155-24520, filed 11/22/91, effective 12/24/91; 91-03-044 (Order 90-18), § 296-155-24520, filed 1/10/91, effective 2/12/91.]

WAC 296-155-24521 Safety monitor system. (1) A safety monitor system (SMS) may be used in conjunction with a warning line system as a method of guarding against falls during work on low pitched roofs and leading edge work only.

(2) When selected, the employer shall ensure that the safety monitor system shall be addressed in the fall protection work plan, include the name of the safety monitor(s) and the extent of their training in both the safety monitor and warning line systems, and shall ensure that the following requirements are met.

(3) The safety monitor system shall not be used when adverse weather conditions create additional hazards.

(4) A person acting in the capacity of safety monitor(s) shall be trained in the function of both the safety monitor and warning lines systems, and shall:

(a) Be a competent person as defined in WAC 296-155-24503.

(b) Have control authority over the work as it relates to fall protection.

(c) Be instantly distinguishable over members of the work crew.

(d) Engage in no other duties while acting as safety monitor.

(e) Be positioned in relation to the workers under their protection, so as to have a clear, unobstructed view and be able to maintain normal voice communication.

(f) Not supervise more than eight exposed workers at one time.

(g) Warn the employee when it appears that the employee is unaware of a fall hazard or is acting in an unsafe manner.

(5) Control zone:

(a) Workers shall be distinguished from other members of the crew by wearing highly visible, distinctive, and uniform apparel readily distinguishing them from other members of the crew only while in the control zone.

(b) The employer shall ensure that each employee working in a control zone promptly comply with fall hazard warnings from safety monitors.

[Statutory Authority: RCW 49.17.010, [49.17].040, and [49.17].050. 00-14-058, § 296-155-24521, filed 7/3/00, effective 10/1/00. Statutory Authority: RCW 49.17.040, [49.17.]050 and [49.17.]060. 96-24-051, § 296-155-24521, filed 11/27/96, effective 2/1/97. Statutory Authority: Chapter 49.17 RCW. 95-10-016, § 296-155-24521, filed 4/25/95, effective 10/1/95; 91-03-044 (Order 90-18), § 296-155-24521, filed 1/10/91, effective 2/12/91.]

WAC 296-155-24522 Reserve.

[Statutory Authority: RCW 49.17.040, [49.17.]050 and [49.17.]060. 96-24-051, § 296-155-24522, filed 11/27/96, effective 2/1/97. Statutory Authority: Chapter 49.17 RCW. 95-10-016, § 296-155-24522, filed 4/25/95, effective 10/1/95.]

WAC 296-155-24523 Appendix A to Part C-1—Determining roof widths nonmandatory guidelines for complying with WAC 296-155-24515 (2)(b). (1) This appendix serves as a guideline to assist employers complying with the requirements of WAC 296-155-24515 (2)(b). WAC 296-155-24515 (2)(b) allows the use of a safety monitoring system alone as a means of providing fall protection during the performance of roofing operations on low-sloped roofs 50 feet (15.25 m) or less in width. Each example in the appendix shows a roof plan or plans and indicates where each roof or roof area is to be measured to determine its width. Section views or elevation views are shown where appropriate. Some examples show "correct" and "incorrect" subdivisions of irregularly shaped roofs divided into smaller, regularly shaped areas. In all examples, the dimension selected to be the width of an area is the lesser of the two primary dimensions of the area, as viewed from above. Example A shows that on a simple rectangular roof, width is the lesser of the two primary overall dimensions. This is also the case with roofs which are sloped toward or away from the roof center, as shown in Example B.

(2) Many roofs are not simple rectangles. Such roofs may be broken down into subareas as shown in Example C. The process of dividing a roof area can produce many different configurations. Example C gives the general rule of using dividing lines of minimum length to minimize the size and number of the areas which are potentially less than 50 feet (15.25 m) wide. The intent is to minimize the number of roof areas where safety monitoring systems alone are sufficient protection.

(3) Roofs which are comprised of several separate, noncontiguous roof areas, as in Example D, may be considered as a series of individual roofs. Some roofs have penthouses, additional floors, courtyard openings, or similar architectural features; Example E shows how the rule for dividing roofs into subareas is applied to such configurations. Irregular, non-rectangular roofs must be considered on an individual basis, as shown in Example F.

Example A
Rectangular Shaped Roof

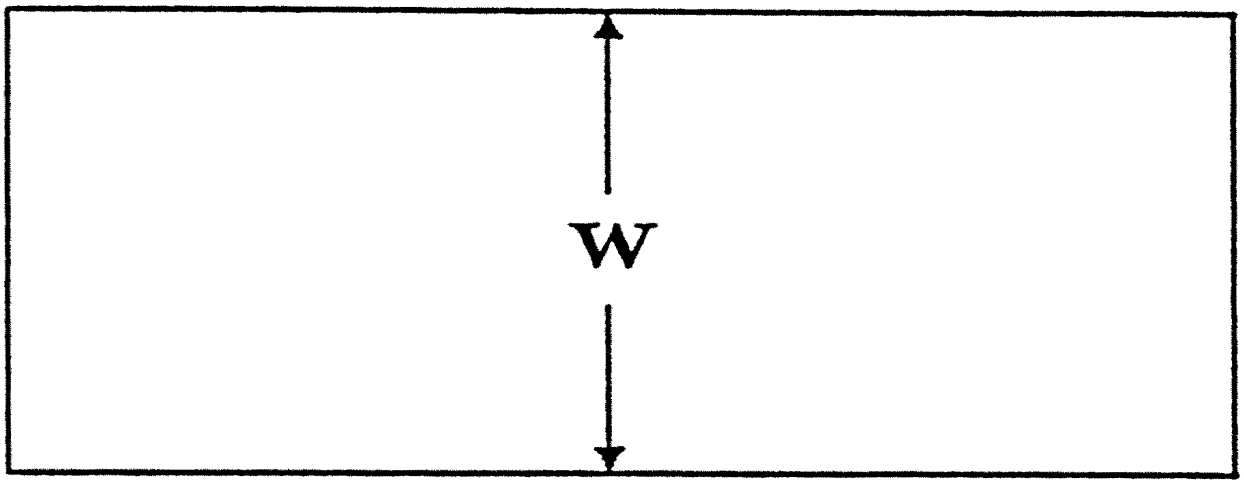

PLAN VIEW

Example B
Sloped Rectangular Shaped Roofs

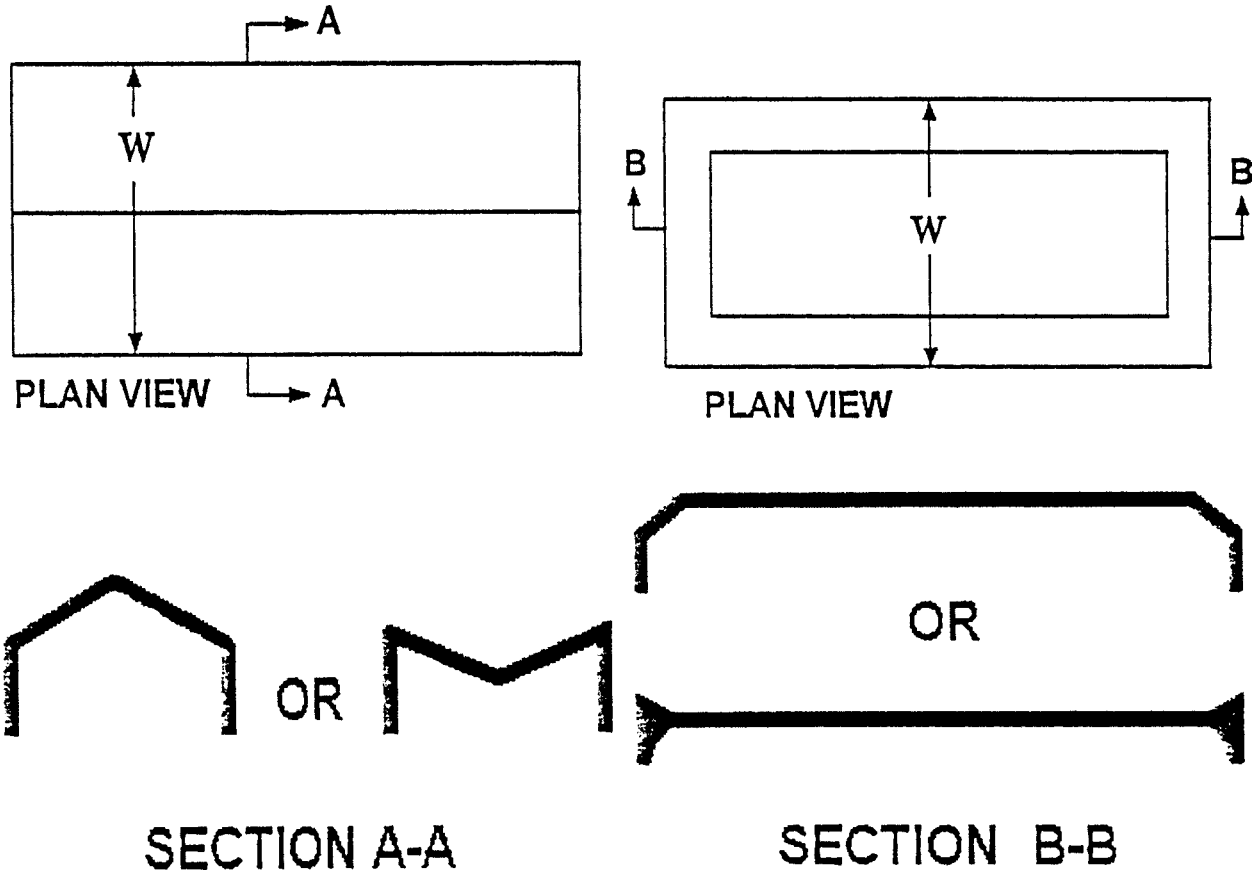

Example C
Irregularly Shaped Roofs With Rectangular Shaped Sections

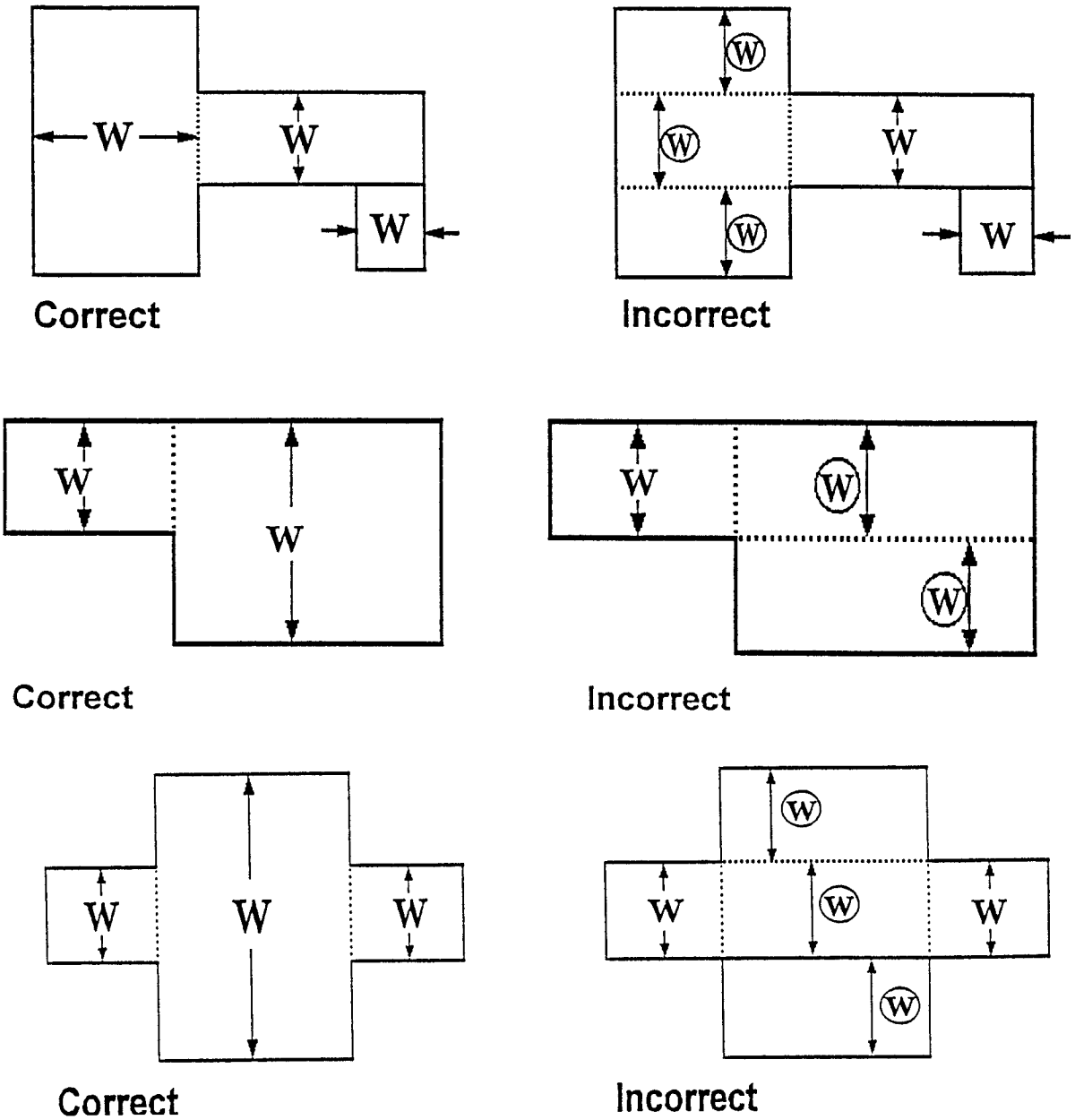

Such roofs are to be divided into subareas by using dividing lines of minimum length to minimize the size and number of the areas which are potentially less than or equal to 50 feet (15.25 m) in width, in order to limit the size of roof areas where the safety monitoring system alone can be used (WAC 296-155-24515 (2)(b)). Dotted lines are used in the examples to show the location of dividing lines, Ⓦ denotes incorrect measurements of width.

Example D
Separate, Non-Contiguous Roof Areas

1.

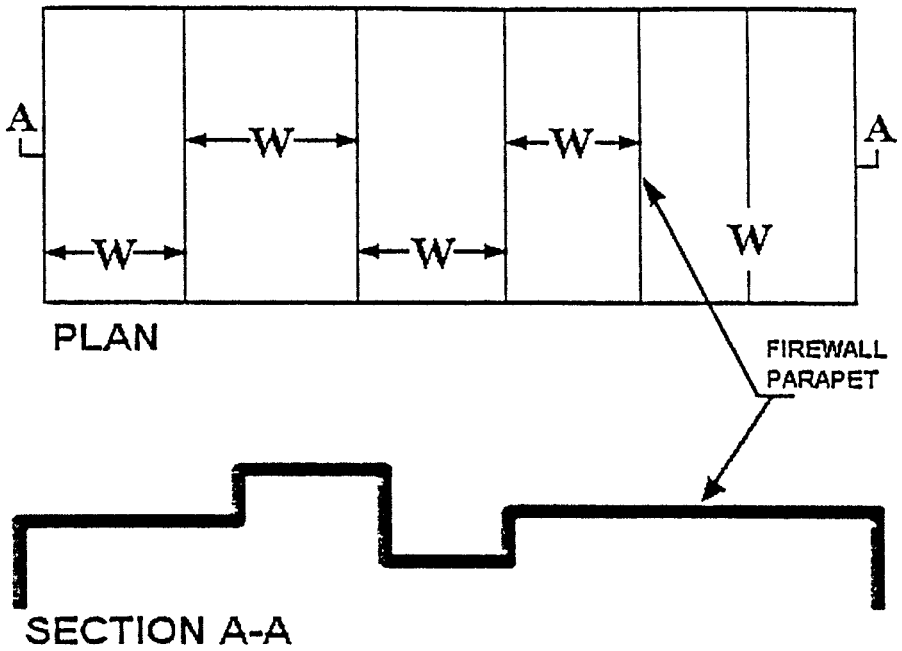

2.

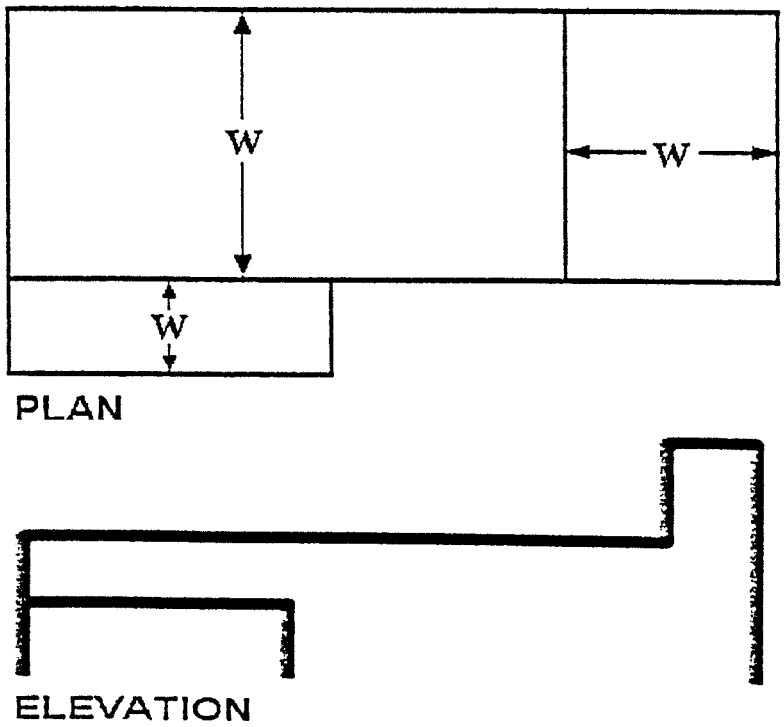

Example E
Roofs with Penthouses, Open Courtyards, Additional Floors, etc.

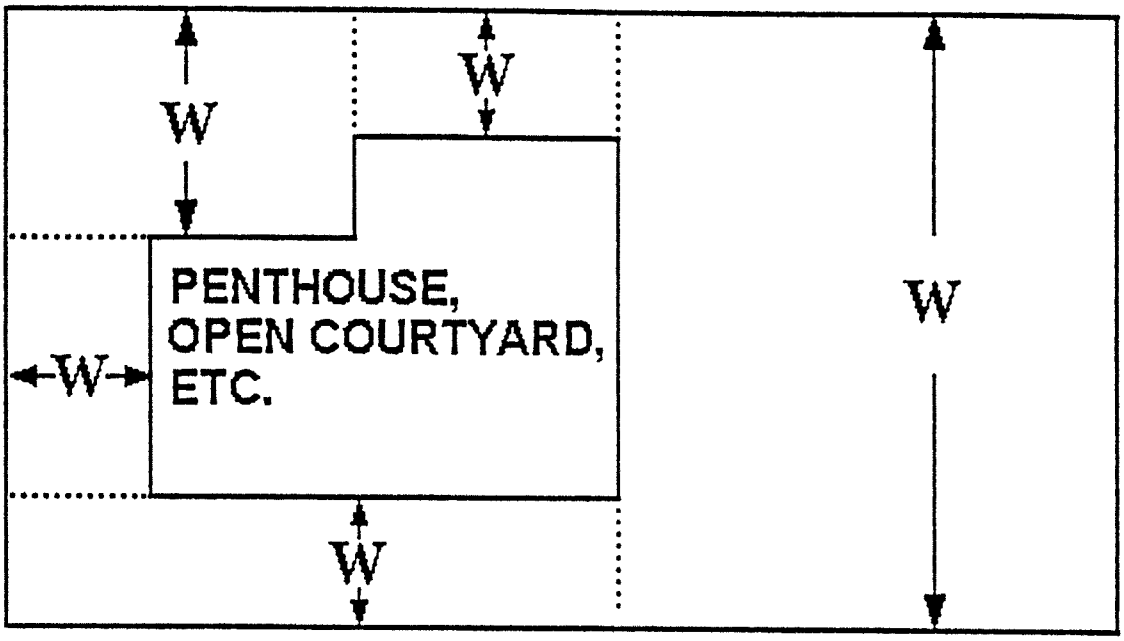

CORRECT

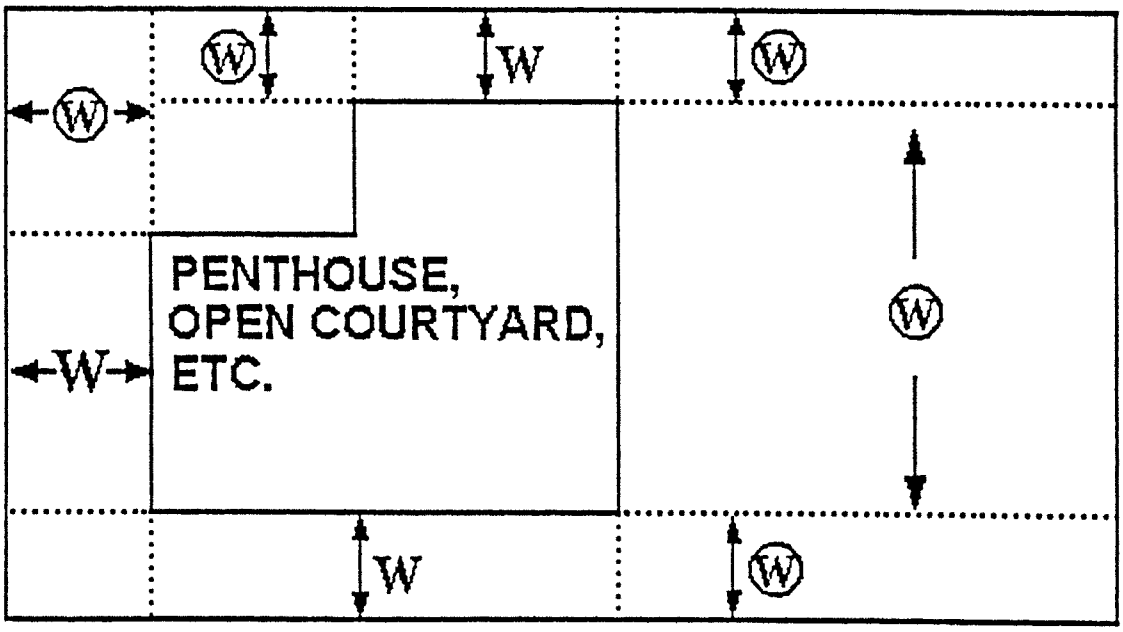

INCORRECT

Example F
Irregular, Non-Rectangular Shaped Roofs

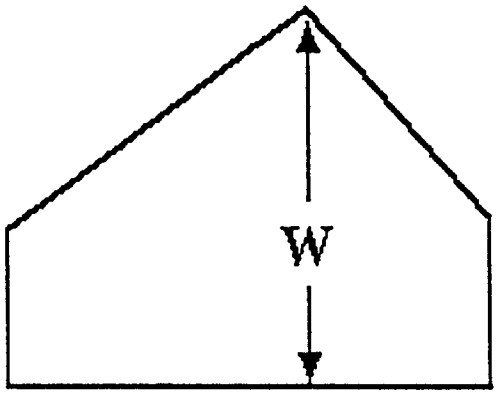

PLAN

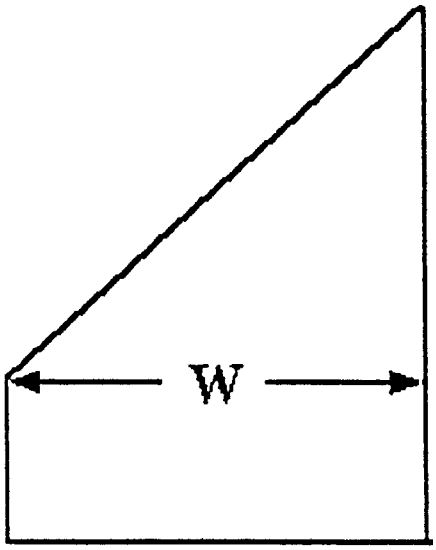

PLAN

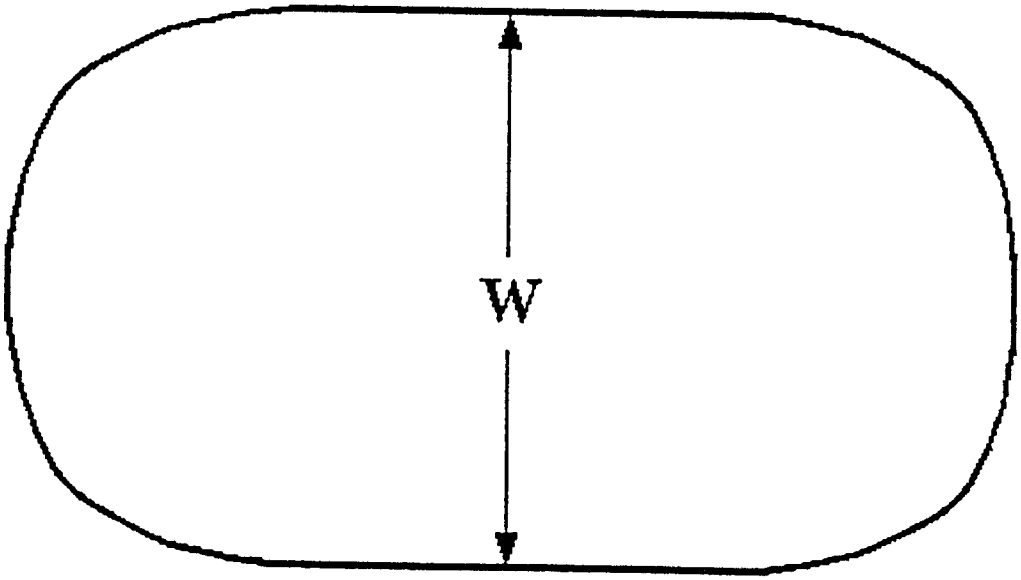

PLAN

[Statutory Authority: RCW 49.17.040, [49.17.]050 and [49.17.]060. 96-24-051, § 296-155-24523, filed 11/27/96, effective 2/1/97. Statutory Authority: Chapter 49.17 RCW. 95-10-016, § 296-155-24523, filed 4/25/95, effective 10/1/95.]

WAC 296-155-24524 Reserve.

[Statutory Authority: RCW 49.17.040, [49.17.]050 and [49.17.]060. 96-24-051, § 296-155-24524, filed 11/27/96, effective 2/1/97. Statutory Authority: Chapter 49.17 RCW. 95-10-016, § 296-155-24524, filed 4/25/95, effective 10/1/95.]

WAC 296-155-24525 Appendix B to Part C-1—Fall restraint and fall arrest (employer information only). Additional standards that require the use of fall restraint and/or fall arrest protection for employees are listed below:

Ladders	WAC 296-155-480 (1)(r) WAC 296-155-480 (1)(s)
Scaffolds	WAC 296-155-483(7)
Boom Supported Elevating Work Platforms	WAC 296-155-489
Vehicle Mounted Elevated and Rotating Work Platforms	WAC 296-155-490 (2)(b)(v)
Crane and Derrick Supported Work Platforms	WAC 296-155-528 (6)(c) WAC 296-155-528 (6)(d) WAC 296-155-528 (7)(i) WAC 296-155-528 (7)(j) WAC 296-155-528 (7)(k) WAC 296-155-528 (10)(h)
Open Sided Floors	WAC 296-155-505 (6)(a) through (f)
Pile Driving	WAC 296-155-620 (1)(i)
Vertical Slip Forms	WAC 296-155-688(9)
Placing and Removal of Forms	WAC 296-155-689(4)
Steel Erection Temporary Floors	WAC 296-155-705 (2)(b)

[Statutory Authority: RCW 49.17.010, [49.17].040, [49.17].050. 02-12-098, § 296-155-24525, filed 6/5/02, effective 8/1/02; 00-14-058, § 296-155-24525, filed 7/3/00, effective 10/1/00. Statutory Authority: RCW 49.17.010, [49.17].040, [49.17].050 and [49.17].060. 98-05-046, § 296-155-24525, filed 2/13/98, effective 4/15/98. Statutory Authority: RCW 49.17.040, [49.17.]050 and [49.17.]060. 96-24-051, § 296-155-24525, filed 11/27/96, effective 2/1/97. Statutory Authority: Chapter 49.17 RCW. 95-10-016, § 296-155-24525, filed 4/25/95, effective 10/1/95; 91-03-044 (Order 90-18), § 296-155-24525, filed 1/10/91, effective 2/12/91.]

PART D
FIRE PROTECTION AND PREVENTION

WAC 296-155-250 Definitions applicable to this part. (1) "Approved" for the purpose of this part, means equipment that has been listed or approved by a nationally recognized testing laboratory such as Factory Mutual Engineering Corp., or Underwriters' Laboratories, Inc., federal agencies such as United States Mine Safety and Health Administration or United States Coast Guard, which issue approvals for such equipment, or the department of labor and industries.

(2) "Closed container" means a container so sealed by means of a lid or other device that neither liquid nor vapor will escape from it at ordinary temperatures.

(3) "Combustible liquid" means any liquid having a flashpoint at or above 100°F (37.8°C). Combustible liquids shall be divided into two classes as follows:

(a) "Class II liquids" shall include those with flashpoints at or above 100°F (37.8°C) and below 140°F (60°C), except any mixture having components with flashpoints of 200°F (93.3°C) or higher, the volume of which make up 99 percent or more of the total volume of the mixture.

(b) "Class III liquids" shall include those with flashpoints at or above 140°F (60°C). Class III liquids are subdivided into two subclasses:

(i) "Class IIIA liquids" shall include those with flashpoints at or above 140°F (60°C) and below 200°F (93.3°C), except any mixture having components with flashpoints of 200°F (93.3°C), or higher, the total volume of which make up 99 percent or more of the total volume of the mixture.

(ii) "Class IIIB liquids" shall include those with flashpoints at or above 200°F (93.3°C). This section does not cover Class IIIB liquids. Where the term "Class III liquids" is used in this section, it shall mean only Class IIIA liquids.

(c) When a combustible liquid is heated for use to within 30°F (16.7°C) of its flashpoint, it shall be handled in accordance with the requirements for the next lower class of liquids.

(4) "Combustion" means any chemical process that involves oxidation sufficient to produce light or heat.

(5) "Fire brigade" means an organized group of employees that are knowledgeable, trained, and skilled in the safe evacuation of employees during emergency situations and in assisting in fire fighting operations.

(6) "Fire resistance" means so resistant to fire that, for specified time and under conditions of a standard heat intensity, it will not fail structurally and will not permit the side away from the fire to become hotter than a specified temperature. For purposes of this part, fire resistance shall be determined by the Standard Methods of Fire Tests of Building Construction and Materials, NFPA 251-72.

(7) "Flammable" means capable of being easily ignited, burning intensely or having a rapid rate of flame spread.

(8) "Flammable liquid" means any liquid having a flashpoint below 100°F (37.8°C), except any mixture having components with flashpoints of 100°F (37.8°C) or higher, the total of which make up 99 percent or more of the total volume of the mixture. Flammable liquids shall be known as Class I liquids. Class I liquids are divided into three classes as follows:

(a) Class IA shall include liquids having flashpoints below 73°F (22.8°C) and having a boiling point below 100°F (37.8°C).

(b) Class IB shall include liquids having flashpoints below 73°F (22.8°C) and having a boiling point at or above 100°F (37.8°C).

(c) Class IC shall include liquids having flashpoints at or above 73°F (22.8°C) and below 100°F (37.8°C).

(9) "Flashpoint" means the minimum temperature at which a liquid gives off vapor within a test vessel in sufficient concentration to form an ignitable mixture with air near the surface of the liquid, and shall be determined as follows:

(a) For a liquid which has a viscosity of less than 45 SUS at 100°F (37.8°C), does not contain suspended solids, and does not have a tendency to form a surface film while under test, the procedure specified in the Standard Method of Test for Flashpoint by Tag Closed Tester (ASTM D-56-70) shall be used.

(b) For a liquid which has a viscosity of 45 SUS or more at 100°F (37.8°C), or contains suspended solids, or has a tendency to form a surface film while under test, the Standard Method of Test for Flashpoint by Pensky-Martens Closed Tester (ASTM D-93-71) shall be used, except that the meth-

ods specified in Note 1 to section 1.1 of ASTM D-93-71 may be used for the respective materials specified in the note.

(10) "Liquified petroleum gases" "LPG" and "LP Gas" mean and include any material which is composed predominantly of any of the following hydrocarbons, or mixtures of them, such as propane, propylene, butane (normal butane or isobutane), and butylenes.

(11) "Portable tank" means a closed container having a liquid capacity more than 60 U.S. gallons, and not intended for fixed installation.

(12) "Safety can" means an approved closed container, of not more than 5 gallons capacity, having a spring-closing lid and spout cover and so designed that it will safely relieve internal pressure when subjected to fire exposure.

(13) "Salamander" means a portable heating device, solid or liquid fueled, which is not vented to the outdoor atmosphere.

(14) "Vapor pressure" means the pressure, measured in pounds per square inch (absolute), exerted by a volatile liquid as determined by the "Standard Method of Test for Vapor Pressure of Petroleum Products (Reid Method)," (ASTM D-323-68).

[Statutory Authority: RCW 49.17.040 and 49.17.050. 86-03-074 (Order 86-14), § 296-155-250, filed 1/21/86; Order 74-26, § 296-155-250, filed 5/7/74, effective 6/6/74.]

WAC 296-155-260 Fire protection. (1) General requirements.

(a) The employer shall be responsible for development of a fire protection program to be followed throughout all phases of construction and demolition work, and the employer shall provide for fire fighting equipment as specified in this part. As fire hazards occur, there shall be no delay in providing necessary equipment.

(b) Access to all available fire fighting equipment shall be maintained at all times.

(c) All fire fighting equipment, provided by the employer, shall be conspicuously located.

(d) All fire fighting equipment shall be periodically inspected by a competent person, and maintained in operating condition. Defective equipment shall be immediately replaced.

(e) As warranted by the project, the employer shall provide a trained and equipped fire fighting organization (fire brigade) to assure adequate protection to life.

(2) Water supply.

(a) A temporary or permanent water supply, of sufficient volume, duration, and pressure, required to properly operate fire fighting equipment shall be made available as soon as combustible materials accumulate.

(b) Where underground water mains are to be provided, they shall be installed, completed, and made available for use as soon as practicable.

(3) Portable fire fighting equipment.

(a) A fire extinguisher, rated not less than 2A, shall be provided for each 3,000 square feet of a combustible building area, or major fraction thereof. Travel distance from any point of the protected area to the nearest fire extinguisher shall not exceed a horizontal distance of 100 feet.

Note: One 55-gallon open drum of water with two fire pails may be substituted for a fire extinguisher having a 2A rating.

(b) A 1/2-inch diameter garden-type hose line, not to exceed 100 feet in length and equipped with a nozzle, may be substituted for a 2A-rated fire extinguisher, provided it is capable of discharging a minimum of 5 gallons per minute with a minimum hose stream range of 30 feet horizontally. The garden-type hose lines shall be mounted on conventional racks or reels. The number and location of hose racks or reels shall be such that at least one hose stream can be applied to all points in the area.

(c) One or more fire extinguishers, rated not less than 2A, shall be provided on each floor. In multistory buildings, where combustibles are present, at least one fire extinguisher shall be located adjacent to a stairway.

(d) Extinguishers and water drums, subject to freezing, shall be protected from freezing.

(e) A fire extinguisher, rated not less than 10B, shall be provided within 50 feet of wherever more than 5 gallons of flammable or combustible liquids or 5 pounds of flammable gas are being used on the jobsite. This requirement does not apply to the integral fuel tanks of motor vehicles.

(f) Carbon tetrachloride and other toxic vaporizing liquid fire extinguishers are prohibited.

(g) Portable fire extinguishers shall be inspected periodically and maintained in accordance with Maintenance and Use of Portable Fire Extinguishers, NFPA No. 10A-1981 and WAC 296-800-300.

(h) Fire extinguishers which have been listed or approved by a nationally recognized testing laboratory, shall be used to meet the requirements of this part. (See Table D-1)

Note: For additional requirements relating to portable fire extinguishers see WAC 296-800-300.

	WATER TYPE				FOAM	CARBON DIOXIDE	DRY CHEMICAL			
							SODIUM OR POTASSIUM BICARBONATE		MULTI-PURPOSE ABC	
	STORED PRESSURE	CARTRIDGE-OPERATED	WATER PUMP TANK	SODA ACID	FOAM	CO_2	CARTRIDGE OPERATED	STORED PRESSURE	STORED PRESSURE	CARTRIDGE OPERATED
CLASS A FIRES WOOD, PAPER, TRASH, BUILDING FURNITURE COMBUSTIBLES	YES	YES	YES	YES	YES	NO (BUT WILL CONTROL SMALL SURFACE FIRES)	NO (BUT WILL CONTROL SMALL SURFACE FIRES)	NO (BUT WILL CONTROL SMALL SURFACE FIRES)	YES	YES
CLASS B FIRES FLAMMABLE LIQUIDS, GASOLINE, OIL, PAINTS, GREASE, ETC.	NO	NO	NO	NO	YES	YES	YES	YES	YES	YES
CLASS C FIRES ELECTRICAL EQUIPMENT	NO	NO	NO	NO	NO	YES	YES	YES	YES	YES
CLASS D FIRES COMBUSTIBLE METALS	SPECIAL EXTINGUISHING AGENTS APPROVED BY RECOGNIZED TESTING LABORATORIES									
METHODS OF OPERATION	PULL PIN, SQUEEZE LEVER	TURN UPSIDE DOWN AND STOMP	PUMP HANDLE	TURN UPSIDE DOWN	TURN UPSIDE DOWN	PULL PIN SQUEEZE LEVER	REMOVE CARTRIDGE SQUEEZE LEVER	PULL PIN SQUEEZE HANDLE	PULL PIN SQUEEZE HANDLE	REMOVE CARTRIDGE SQUEEZE LEVER
RANGE	30' - 40'	30' - 40'	30' - 40'	30' - 40'	30' - 40'	5' - 8'	5' - 20'	5' - 20'	5' - 20'	5' - 20'
MAINTENANCE	CHECK AIR PRESSURE GAUGE MONTHLY	WEIGH GAS CARTRIDGE AND WATER IF REQUIRED ANNUALLY	DISCHARGE AND FILL WITH WATER ANNUALLY	DISCHARGE ANNUALLY RECHARGE	DISCHARGE ANNUALLY RECHARGE	WEIGH SEMI ANNUALLY	WEIGH GAS CARTRIDGE CHECK CONDITION OF DRY CHEMICAL ANNUALLY	CHECK PRESSURE GAUGE AND CONDITION OF DRY CHEMICAL ANNUALLY	CHECK PRESSURE GAUGE AND CONDITION OF DRY CHEMICAL ANNUALLY	REMOVE CARTRIDGE CHECK CONDITION OF DRY CHEMICAL ANNUALLY

Note: One hundred feet, or less, of 1-1/2 inch hose, with a nozzle capable of discharging water at 25 gallons or more per minute, may be substituted for a fire extinguisher rated not more than 2A in the designated area provided that the hose line can reach all points in the area.

(i) If fire hose connections are not compatible with local fire fighting equipment, the contractor shall provide adapters, or equivalent, to permit connections.

(j) During demolition involving combustible materials, charged hose lines, supplied by hydrants, water tank trucks with pumps, or equivalent, shall be made available.

(4) Fixed fire fighting equipment.

(a) Sprinkler protection.

(i) If the facility being constructed includes the installation of automatic sprinkler protection, the installation shall closely follow the construction and be placed in service as soon as applicable laws permit following completion of each story.

(ii) During demolition or alterations, existing automatic sprinkler installations shall be retained in service as long as reasonable. The operation of sprinkler control valves shall be permitted only by properly authorized persons.

Note: Modification of sprinkler systems to permit alterations or additional demolition should be expedited so that the automatic protection may be returned to service as quickly as possible. Sprinkler control valves shall be checked daily at close of work to ascertain that the protection is in service.

(b) Standpipes. In all structures in which standpipes are required, or where standpipes exist in structures being altered, they shall be brought up as soon as applicable laws permit, and shall be maintained as construction progresses in such a manner that they are always ready for fire protection use. The standpipes shall be provided with Siamese fire department connections on the outside of the structure, at the street level, which shall be conspicuously marked. There shall be at least one standard hose outlet at each floor.

(5) Fire alarm devices.

(a) An alarm system, e.g., telephone system, siren, etc., shall be established by the employer whereby employees on the site and the local fire department can be alerted for an emergency.

(b) The alarm code and reporting instructions shall be conspicuously posted at phones and at employee entrances.

(6) Fire cutoffs.

(a) Fire walls and exit stairways, required for the completed buildings, shall be given construction priority. Fire doors, with automatic closing devices, shall be hung on openings as soon as practical.

(b) Fire cutoffs shall be retained in buildings undergoing alterations or demolition until operations necessitate their removal.

[Statutory Authority: RCW 49.17.010, [49.17].040, and [49.17].050. 01-23-060, § 296-155-260, filed 11/20/01, effective 12/1/01; 01-11-038, § 296-155-260, filed 5/9/01, effective 9/1/01. Statutory Authority: Chapter 49.17 RCW. 94-15-096 (Order 94-07), § 296-155-260, filed 7/20/94, effective 9/20/94. Statutory Authority: RCW 49.17.040 and 49.17.050. 86-03-074 (Order 86-14), § 296-155-260, filed 1/21/86; Order 76-6, § 296-155-260, filed 3/1/76; Order 74-26, § 296-155-260, filed 5/7/74, effective 6/6/74.]

WAC 296-155-265 Fire prevention. (1) Ignition hazards.

(a) Electrical wiring and equipment for light, heat, or power purposes shall be installed in compliance with the requirements of Part I of this standard.

(b) Internal combustion engine powered equipment shall be so located that exhausts are well away from combustible materials. When exhausts are piped to outside the building

under construction, a clearance of at least 6 inches shall be maintained between such piping and combustible material.

(c) Smoking shall be prohibited at or in the vicinity of operations which constitute a fire hazard, and shall be conspicuously posted: "No smoking or open flame."

(d) Portable battery powered lighting equipment, used in connection with the storage, handling, or use of flammable gases or liquids, shall be of the type approved for the hazardous locations.

(e) The nozzle of air, inert gas, and steam lines or hoses, when used in the cleaning or ventilation of tanks and vessels that contain hazardous concentrations of flammable gases or vapors, shall be bonded to the tank or vessel shell. Bonding devices shall not be attached or detached in hazardous concentrations of flammable gases or vapors.

(f) Workers shall not take open lights or open flames near or in an open sewer manhole, gas main, conduit or other similar place until the absence of explosive or harmful gases has been assured. Open lights or flames shall not be carried into areas and enclosures where flammable vapors or exposed low flash point solvents exist. Only approved and suitable protected lights shall be used.

(2) Temporary buildings.

(a) No temporary building shall be erected where it will adversely affect any means of exit.

(b) Temporary buildings, when located within another building or structure, shall be of either noncombustible construction or of combustible construction having a fire resistance of not less than 1 hour.

(c) Temporary buildings, located other than inside another building and not used for the storage, handling, or use of flammable or combustible liquids, flammable gases, explosives, or blasting agents, or similar hazardous occupancies, shall be located at a distance of not less than 10 feet from another building or structure. Groups of temporary buildings, not exceeding 2,000 square feet in aggregate, shall, for the purpose of this part, be considered a single temporary building.

(3) Open yard storage.

(a) Combustible materials shall be piled with due regard to the stability of piles and in no case higher than 20 feet.

(b) Driveways between and around combustible storage piles shall be at least 15 feet wide and maintained free from accumulation of rubbish, equipment, or other articles or materials. Driveways shall be so spaced that a maximum grid system unit of 50 feet by 150 feet is produced.

(c) The entire storage site shall be kept free from accumulation of unnecessary combustible materials. Weeds and grass shall be kept down and a regular procedure provided for the periodic cleanup of the entire area.

(d) When there is a danger of an underground fire, that land shall not be used for combustible or flammable storage.

(e) Method of piling shall be solid wherever possible and in orderly and regular piles. No combustible material shall be stored outdoors within 10 feet of a building or structure.

(f) Portable fire extinguishing equipment, suitable for the fire hazard involved, shall be provided at convenient, conspicuously accessible locations in the yard area. Portable fire extinguishers, rated not less than 2A, shall be placed so that maximum travel distance to the nearest unit shall not exceed 100 feet.

(4) Indoor storage.

(a) Storage shall not obstruct, or adversely affect, means of exit.

(b) All materials shall be stored, handled, and piled with due regard to their fire characteristics.

(c) Noncompatible materials, which may create a fire hazard, shall be segregated by a barrier having a fire resistance of at least 1 hour.

(d) Material shall be piled to minimize the spread of fire internally and to permit convenient access for firefighting. Stable piling shall be maintained at all times. Aisle space shall be maintained to safely accommodate the widest vehicle that may be used within the building for fire- fighting purposes.

(e) Clearance of at least 36 inches shall be maintained between the top level of the stored material and the sprinkler deflectors.

(f) Clearance shall be maintained around lights and heating units to prevent ignition of combustible materials.

(g) A clearance of 24 inches shall be maintained around the path of travel of fire doors unless a barricade is provided, in which case no clearance is needed. Material shall not be stored within 36 inches of a fire door opening.

[Statutory Authority: Chapter 49.17 RCW. 88-23-054 (Order 88-25), § 296-155-265, filed 11/14/88; Order 74-26, § 296-155-265, filed 5/7/74, effective 6/6/74.]

WAC 296-155-270 Flammable and combustible liquids. (1) General requirements.

(a) Only approved containers and portable tanks shall be used for storage and handling of flammable and combustible liquids. Approved metal safety cans, or department of transportation approved containers shall be used for the handling and use of flammable liquids in quantities five gallons or less, except that this shall not apply to those flammable liquid materials which are highly viscid (extremely hard to pour), which may be used and handled in original shipping containers. For quantities of one gallon or less, only the original container may be used for storage, use, and handling of flammable liquids.

(b) Flammable or combustible liquids shall not be stored in areas used for exits, stairways, or normally used for the safe passage of people.

(c) Flammable and combustible liquid containers shall be legibly marked to indicate their contents. Each storage container for flammable or combustible liquids, with a capacity of 50 gallons or more, shall have the contents of the container identified by a sign of clearly visible contrasting colors with letters at least 3 inches high, painted on the container at the discharge valve and at the fill point.

(d) Gasoline shall not be used as a solvent or a cleaning agent.

(2) Indoor storage of flammable and combustible liquids.

(a) No more than 25 gallons of flammable or combustible liquids shall be stored in a room outside of an approved storage cabinet. For storage of liquid petroleum gas, see WAC 296-155-275.

(b) Quantities of flammable and combustible liquid in excess of 25 gallons shall be stored in an acceptable or approved cabinet meeting the following requirements:

(i) Acceptable wooden storage cabinets shall be constructed in the following manner, or equivalent: The bottom, sides, and top shall be constructed of an exterior grade of plywood at least 1 inch in thickness, which shall not break down or delaminate under standard fire test conditions. All joints shall be rabbeted and shall be fastened in two directions with flathead wood screws, when more than one door is used, there shall be a rabbeted overlap of not less than 1 inch. Steel hinges shall be mounted in such a manner as to not lose their holding capacity due to loosening or burning out of the screws when subjected to fire. Such cabinets shall be painted inside and out with fire retardant paint.

(ii) Approved metal storage cabinets will be acceptable.

(iii) Cabinets shall be labeled in conspicuous lettering, "Flammable—Keep fire away."

(c) Not more than 60 gallons of flammable or 120 gallons of combustible liquids shall be stored in any one storage cabinet. Not more than three such cabinets may be located in a single storage area. Quantities in excess of this shall be stored in an inside storage room.

(d)(i) Inside storage room shall be constructed to meet the required fire-resistive rating for their use. Such construction shall comply with the test specifications set forth in Standard Methods of Fire Test of Building Construction and Material, NFPA 251-1972.

(ii) Where an automatic extinguishing system is provided, the system shall be designed and installed in an approved manner. Openings to other rooms or buildings shall be provided with noncombustible liquid-tight raised sills or ramps at least 4 inches in height, or the floor in the storage area shall be at least 4 inches below the surrounding floor. Openings shall be provided with approved self-closing fire doors. The room shall be liquid-tight where the walls join the floor. A permissible alternate to the sill or ramp is an open-grated trench, inside of the room, which drains to a safe location. Where other portions of the building or other buildings are exposed, windows shall be protected as set forth in the Standard for Fire Doors and Windows, NFPA No. 80-1983, for Class E or F openings. Wood of at least 1-inch nominal thickness may be used for shelving, racks, dunnage, scuffboards, floor overlay and similar installations.

(iii) Materials which will react with water and create a fire hazard shall not be stored in the same room with flammable or combustible liquids.

(iv) Storage in inside storage rooms shall comply with Table D-2 following:

TABLE D-2

Fire protection provided	Fire resistance	Maximum size	Total allowable quantities gals./sq. ft./floor area
Yes	2 hrs.	500 sq. ft.	10
No	2 hrs.	500 sq. ft.	4
Yes	1 hr.	150 sq. ft.	5
No	1 hr.	150 sq. ft.	2

Note: Fire protection system shall be sprinkler, water spray, carbon dioxide or other system approved by a nationally recognized testing laboratory for this purpose.

(v) Electrical wiring and equipment located in inside storage rooms shall be approved for Class 1, Division 1, hazardous locations. For definition of Class 1, Division 1, hazardous locations, see WAC 296-155-456.

(vi) Every inside storage room shall be provided with either a gravity or a mechanical exhausting system. Such system shall commence not more than 12 inches above the floor and be designed to provide for a complete change of air within the room at least 6 times per hour. If a mechanical exhausting system is used, it shall be controlled by a switch located outside of the door. The ventilating equipment and any lighting fixtures shall be operated by the same switch. An electric pilot light shall be installed adjacent to the switch if flammable liquids are dispensed within the room. Where gravity ventilation is provided, the fresh air intake, as well as the exhausting outlet from the room, shall be on the exterior of the building in which the room is located.

(vii) In every inside storage room there shall be maintained one clear aisle at least 3 feet wide. Containers over 30 gallons capacity shall not be stacked one upon the other.

(viii) Flammable and combustible liquids in excess of that permitted in inside storage rooms shall be stored outside of buildings in accordance with subsection (3) of this section.

(3) Storage outside buildings.

(a) Storage of containers (not more than 60 gallons each) shall not exceed 1,100 gallons in any one pile or area. Piles or groups of containers shall be separated by a 5-foot clearance. Piles or groups of containers shall not be nearer than 20 feet to a building.

(b) Within 200 feet of each pile of containers, there shall be a 12-foot-wide access way to permit approach of fire control apparatus.

(c) The storage area shall be graded in a manner to divert possible spills away from buildings or other exposures, or shall be surrounded by a curb or earth dike at least 12 inches high. When curbs or dikes are used, provisions shall be made for draining off accumulations of ground or rain water, or spills of flammable or combustible liquids. Drains shall terminate at a safe location and shall be accessible to operation under fire conditions.

(d) Outdoor portable tank storage.

(i) Portable tanks shall not be nearer than 20 feet from any building. Two or more portable tanks, grouped together, having a combined capacity in excess of 2,200 gallons, shall be separated by a 5-foot-clear area. Individual portable tanks exceeding 1,100 gallons shall be separated by a 5-foot-clear area.

(ii) Within 200 feet of each portable tank, there shall be a 12-foot-wide access way to permit approach of fire control apparatus.

(e) Storage areas shall be kept free of weeds, debris, and other combustible material not necessary to the storage.

(f) Portable tanks, not exceeding 660 gallons, shall be provided with emergency venting and other devices, as required by chapters III and IV of NFPA 30-1972, The Flammable and Combustible Liquids Code.

(g) Portable tanks, in excess of 660 gallons, shall have emergency venting and other devices, as required by chapters II and III of the Flammable and Combustible Liquids Code, NFPA 30-1972.

(4) Fire control for flammable or combustible liquid storage.

(a) At least one portable fire extinguisher, having a rating of not less than 20-B units, shall be located outside of, but not more than 10 feet from, the door opening into any room used for storage of more than 60 gallons of flammable or combustible liquids.

(b) At least one portable fire extinguisher having a rating of not less than 20-B units shall be located not less than 25 feet, nor more than 75 feet, from any flammable liquid storage area located outside.

(c) When sprinklers are provided, they shall be installed in accordance with the Standard for the Installation of Sprinkler Systems, NFPA 13-1972.

(d) At least one portable fire extinguisher having a rating of not less than 20-B:C units shall be provided on all tank trucks or other vehicles used for transporting and/or dispensing flammable or combustible liquids.

Note: For additional requirements relating to portable fire extinguishers see WAC 296-800-300.

(5) Dispensing liquids.

(a) Areas in which flammable or combustible liquids are transferred at the same time, in quantities greater than 5 gallons from one tank or container to another tank or container, shall be separated from other operations by 25-feet distance or by construction having a fire-resistance of at least 1 hour. Drainage or other means shall be provided to control spills. Adequate natural or mechanical ventilation shall be provided to maintain the concentration of flammable vapor at or below 10 percent of the lower flammable limit.

(b) Transfer flammable liquids from one container to another shall be done only when containers are electrically interconnected (bonded).

(c) Flammable or combustible liquids shall be drawn from or transferred into vessels, containers, or tanks within a building or outside only through a closed piping system, from safety cans, by means of a device drawing through the top, or from a container, or portable tanks, by gravity or pump, through an approved self-closing valve. Transferring by means of air pressure on the container or portable tank is prohibited.

(d) The dispensing units shall be protected against collision damage.

(e) Dispensing devices and nozzles for flammable liquids shall be of an approved type, as required by WAC 296-24-33015.

(6) Handling liquids at point of final use.

(a) Flammable liquids shall be kept in closed containers when not actually in use.

(b) Leakage or spillage of flammable or combustible liquids shall be disposed of promptly and safely.

(c) Flammable liquids shall be used only where there are no open flames or other sources of ignition within 50 feet of the operation, unless conditions warrant greater clearance.

(7) Service and refueling areas.

(a) Flammable or combustible liquids shall be stored in approved closed containers, in tanks located underground, or in aboveground portable tanks.

(b) The tank trucks shall comply with the requirements covered in the Standard for Tank Vehicles for Flammable and Combustible Liquids, NFPA No. 385-1977.

(c) The dispensing hose shall be an approved type.

(d) The dispensing nozzle shall be an approved automatic-closing type.

(e) Underground tanks shall not be abandoned.

(f) Clearly identified and easily accessible switch(es) shall be provided at a location remote from dispensing devices to shut off the power to all dispensing devices in the event of an emergency.

(g)(i) Heating equipment of an approved type may be installed in the lubrication or service area where there is no dispensing or transferring of flammable liquids, provided the bottom of the heating unit is at least 18 inches above the floor and is protected from physical damage.

(ii) Heating equipment installed in lubrication or service areas, where flammable liquids are dispensed, shall be of an approved type for garages, and shall be installed at least 8 feet above the floor.

(h) There shall be no smoking or open flames in the areas used for fueling, servicing fuel systems for internal combustion engines, receiving or dispensing of flammable or combustible liquids.

(i) Conspicuous and legible signs prohibiting smoking shall be posted.

(j) The motor of any equipment being fueled shall be shut off during the fueling operation.

(k) Each service or fueling area shall be provided with at least one fire extinguisher having a rating of not less than 20BC located so that an extinguisher will be within 75 feet of each pump, dispenser, underground fill pipe opening, and lubrication or service area.

Note: For additional requirements relating to portable fire extinguishers see WAC 296-800-300.

[Statutory Authority: RCW 49.17.010, [49.17].040, and [49.17].050. 01-17-033, § 296-155-270, filed 8/8/01, effective 9/1/01; 99-17-094, § 296-155-270, filed 8/17/99, effective 12/1/99. Statutory Authority: Chapter 49.17 RCW. 88-23-054 (Order 88-25), § 296-155-270, filed 11/14/88. Statutory Authority: RCW 49.17.040 and 49.17.050. 86-03-074 (Order 86-14), § 296-155-270, filed 1/21/86; Order 74-26, § 296-155-270, filed 5/7/74, effective 6/6/74.]

WAC 296-155-275 Liquefied petroleum gas (LP-gas). (1) Approval of equipment and systems.

(a) Each system shall have containers, valves, connectors, manifold valve assemblies, and regulators of an approved type.

(b) All cylinders shall meet the department of transportation specification identification requirements published in 49 CFR Part 178, Shipping Container Specifications.

(2) Welding on LP-gas containers. Welding is prohibited on containers.

(3) Container valves and container accessories.

(a) Valves, fittings, and accessories connected directly to the container, including primary shut off valves, shall have a rated working pressure of at least 250 p.s.i.g. and shall be of material and design suitable for LP-gas service.

(b) Connections to containers, except safety relief connections, liquid level gauging devices, and plugged openings, shall have shutoff valves located as close to the container as practicable.

(4) Safety devices.

(a) Every container and every vaporizer shall be provided with one or more approved safety relief valves or devices. These valves shall be arranged to afford free vent to

the outer air with discharge not less than 5 feet horizontally away from any opening into a building which is below such discharge.

(b) Shutoff valves shall not be installed between the safety relief device and the container, or the equipment or piping to which the safety relief device is connected, except that a shutoff valve may be used where the arrangement of this valve is such that full required capacity flow through the safety relief device is always afforded.

(c) Container safety relief devices and regulator relief vents shall be located not less than 5 feet in any direction from air openings into sealed combustion system appliances or mechanical ventilation air intakes.

(5) Dispensing.

(a) Filling of fuel containers for trucks or motor vehicles from bulk storage containers shall be performed not less than 10 feet from the nearest masonry-walled building, or not less than 25 feet from the nearest building or other construction and, in any event, not less than 25 feet from any building opening.

(b) Filling of portable containers or containers mounted on skids from storage containers shall be performed not less than 50 feet from the nearest building.

(6) Requirements for appliances.

(a) LP-gas consuming appliances shall be approved types.

(b) Any appliance that was originally manufactured for operation with a gaseous fuel other than LP-gas, and is in good condition, may be used with LP-gas only after it is properly converted, adapted, and tested for performance with LP-gas before the appliance is placed in use.

(7) Containers and regulating equipment installed outside of buildings or structures. Containers shall be upright upon firm foundations or otherwise firmly secured. The possible effect on the outlet piping of settling shall be guarded against by a flexible connection or special fitting.

(8) Containers and equipment used inside of buildings or structures.

(a) When operational requirements make portable use of containers necessary, and their location outside of buildings or structures is impractical, containers and equipment are permitted to be used inside of buildings or structures in accordance with (b) through (k) of this subsection. In addition, there may be provisions of this section that are applicable to the particular use or occupancy.

(b) "Containers in use" means connected for use.

(c) Systems utilizing containers having a water capacity greater than 2 1/2-pounds (nominal 1 pound LP-gas capacity) shall be equipped with excess flow valves. Such excess flow valves shall be either integral with the container valves or in the connections to the container valve outlets.

(d) Regulators, when required, shall be either directly connected to the container valves or to manifolds connected to the container valves. The regulator shall be suitable for use with LP-gas. Manifolds and fittings connecting containers to pressure regulator inlets shall be designed for at least 250 p.s.i.g. service pressure.

(e) Valves on containers having water capacity greater than 50 pounds (nominal 20 pounds LP-gas capacity) shall be protected from damage while in use or storage.

(f) Aluminum piping or tubing shall not be used.

(g) Hose shall be designed for a working pressure of at least 250 p.s.i.g. Design, construction, and performance of hose, and hose connections shall have their suitability determined by listing by a nationally recognized testing agency. The hose length shall be as short as practical. Hoses shall be long enough to permit compliance with spacing provisions of (a) through (m) of this subsection, without kinking or straining, or causing hose to be so close to a burner as to be damaged by heat.

(h) Portable heaters, including salamanders, shall be equipped with an approved automatic device to shut off the flow of gas to the mainburner, and pilot if used, in the event of flame failure. Such heaters, having inputs above 50,000 BTU per hour, shall be equipped with either a pilot, which must be lighted and proved before the main burner can be turned on, or an electrical ignition system.

Note: The provisions of this subdivision do not apply to portable heaters under 7,500 BTU per hour input when used with containers having a maximum water capacity of 2 1/2 pounds.

(i) Container valves, connectors, regulators, manifolds, piping, and tubing shall not be used as structural supports for heaters.

(j) Containers, regulating equipment, manifolds, pipe, tubing, and hose shall be located to minimize exposure to high temperatures or physical damage.

(k) Containers having a water capacity greater than 2 1/2 pounds (nominal 1 pound LP-gas capacity) connected for use shall stand on a firm and substantially level surface and, when necessary, shall be secured in an upright position.

(l) The maximum water capacity of individual containers shall be 245 pounds (nominal 100 pounds LP-gas capacity).

(m) For temporary heating, heaters (other than integral heater-container units) shall be located at least 6 feet from any LP-gas container. This shall not prohibit the use of heaters specifically designed for attachment to the container or to a supporting standard, provided they are designed and installed so as to prevent direct or radiant heat application from the heater onto the containers. Blower and radiant type heaters shall not be directed toward any LP-gas container within 20 feet.

(n) If two or more heater-container units, of either the integral or nonintegral type, are located in an unpartitioned area on the same floor, the container or containers of each unit shall be separated from the container or containers of any other unit by at least 20 feet.

(o) When heaters are connected to containers for use in an unpartitioned area on the same floor, the total water capacity of containers, manifolded together for connection to a heater or heaters, shall not be greater than 735 pounds (nominal 300 pounds LP-gas capacity). Such manifolds shall be separated by at least 20 feet.

(p) Storage of containers awaiting use shall be in accordance with subsections (10) and (11) of this section.

(9) Multiple container systems.

(a) Valves in the assembly of multiple container systems shall be arranged so that replacement of containers can be made without shutting off the flow of gas in the system. This provision is not to be construed as requiring an automatic changeover device.

(b) Heaters shall be equipped with an approved regulator in the supply line between the fuel cylinder and the heater unit. Cylinder connectors shall be provided with an excess flow valve to minimize the flow of gas in the event the fuel line becomes ruptured.

(c) Regulators and low-pressure relief devices shall be rigidly attached to the cylinder valves, cylinders, supporting standards, the building walls, or otherwise rigidly secured, and shall be so installed or protected from the elements.

(10) Storage of LPG containers. Storage of LPG within building is prohibited.

(11) Storage outside of buildings.

(a) Storage outside of buildings, for containers awaiting use, shall be located from the nearest building or group of buildings, in accordance with Table D-3:

TABLE D-3

Quantity of LP-gas stored:	Distance (feet)
500 lbs. or less	0
501 to 6,000 lbs.	10
6,001 to 10,000 lbs.	20
Over 10,000 lbs.	25

(b) Containers shall be in a suitable ventilated enclosure or otherwise protected against tampering, or possible damage by vehicular traffic.

(12) Fire protection. Storage locations shall be provided with at least one approved portable fire extinguisher having a rating of not less than 20-B:C.

Note: For additional requirements relating to portable fire extinguishers see WAC 296-800-300.

[Statutory Authority: RCW 49.17.010, [49.17].040, and [49.17].050. 01-17-033, § 296-155-275, filed 8/8/01, effective 9/1/01. Statutory Authority: RCW 49.17.040 and 49.17.050. 86-03-074 (Order 86-14), § 296-155-275, filed 1/21/86; Order 76-29, § 296-155-275, filed 9/30/76; Order 74-26, § 296-155-275, filed 5/7/74, effective 6/6/74.]

WAC 296-155-280 Temporary heating devices. (1) Ventilation.

(a) Fresh air shall be supplied in sufficient quantities to maintain the health and safety of workers. Where natural means of fresh air supply is inadequate, mechanical ventilation shall be provided.

(b) When heaters are used in confined spaces, special care shall be taken to provide sufficient ventilation in order to ensure proper combustion, maintain the health and safety of workers, and limit temperature rise in the area.

(2) Clearance and mounting.

(a) Temporary heating devices shall be installed to provide clearance to combustible material not less than the amount shown in Table D-4.

(b) Temporary heating devices, which are listed for installation with lesser clearances than specified in Table D-4, may be installed in accordance with their approval.

TABLE D-4

Heating appliances	Minimum clearance, (inches)		
	Sides	Rear	Chimney connector
Room heater, circulating type	12	12	18
Room heater, radiant type	36	36	18

(c) Heaters not suitable for use on wood floors shall not be set directly upon them or other combustible materials. When such heaters are used, they shall rest on suitable heat insulating material or at least 1-inch concrete, or equivalent. The insulating material shall extend beyond the heater 2 feet or more in all directions.

(d) Heaters used in the vicinity of combustible tarpaulins, canvas, or similar coverings shall be located at least 10 feet from the coverings. The coverings shall be securely fastened to prevent ignition or upsetting of the heater due to wind action on the covering or other material.

(3) Stability. Heaters, when in use, shall be set horizontally level, unless otherwise permitted by the manufacturer's markings.

(4) Oil-fired heaters.

(a) Flammable liquid-fired heaters shall be equipped with a primary safety control to stop the flow of fuel in the event of flame failure. Barometric or gravity oil feed shall not be considered a primary safety control.

(b) Heaters designed for barometric or gravity oil feed shall be used only with the integral tanks.

(c) Heaters specifically designed and approved for use with separate supply tanks may be directly connected for gravity feed, or an automatic pump, from a supply tank.

(5) Salamanders.

(a) Coverage. The use of solid fuel salamanders is prohibited in buildings and on scaffolds.

(b) General requirements.

(i) All solid fuel salamanders shall be designed and constructed for use with solid fuel, that is, coal or coke.

(ii) Solid fuel salamanders shall be equipped with a cover designed as part of the unit, to prevent spillage of burning material in case of tipover.

(iii) Salamanders shall be assembled in accordance with the instructions issued by the manufacturer.

(iv) The safeguards engineered into the product shall be maintained and any replacement shall be equivalent thereto.

(v) Salamanders shall be stored in such a manner as to prevent deterioration or damage to the unit.

(c) Operation.

(i) Manufacturers' instructions shall be followed by the user.

(ii) Each time a salamander is placed in operation it shall be checked to insure that it is functioning properly. Its operation shall be checked periodically thereafter.

(iii) When concentrations of carbon monoxide attain quantities greater than 35 parts per million (0.0035 percent) to air volume at employee breathing levels, the salamander shall be extinguished unless additional natural or mechanical

ventilation is provided to reduce the carbon monoxide content to permissible limits.

(iv) Tests for presence of carbon monoxide shall be made by a qualified person within 1 hour after the start of each shift and at least every 3 hours thereafter. If concentrations of carbon monoxide reach 20 parts per million to air volume, tests shall be made more frequently to determine if there is a continuing increase of carbon monoxide concentration.

(v) Records of all tests including the date, time, results obtained, and person making tests, shall be maintained for the duration of the project.

(vi) No persons shall be permitted to be within the area being heated by the salamanders except under the following circumstances: When tending the salamanders; when testing the atmosphere; or in emergency situations.

(vii) No employee shall be permitted to enter the heated area until notification is given to another person located outside. Periodic checks shall be made to ensure the health and safety of employees entering the heated area.

(viii) When a salamander is being used, the responsibility for its operation and maintenance shall be assigned to a qualified employee.

(ix) Salamanders shall not be moved, handled, or serviced while hot or burning, or while component parts are hot to the touch.

(x) Salamanders, when in use, shall be set level with the horizontal unless otherwise permitted by the manufacturer's markings. Salamanders shall be designed so as not to tip over when placed on a surface inclined 25° to the horizontal.

(xi) If equivalent protection and safety is afforded by alternative design, the 25° limitation may be reduced.

(xii) Salamanders not suitable for use on wood floors shall not be set directly upon them or other combustible materials. When such salamanders are used they shall rest on suitable insulating material or at least 1-inch concrete or equivalent. The insulating material shall extend beyond the salamander 2 feet or more in all directions.

(xiii) Salamanders used in the vicinity of tarpaulins, canvas, or similar coverings shall be located a safe distance from coverings and other combustible materials. The coverings shall be securely fastened to prevent ignition of the covering or upsetting of the salamanders due to wind action on the covering or other material.

(xiv) Salamanders in use shall be protected to prevent flame extinguishment.

(d) Ventilation.

(i) Fresh air shall be supplied in sufficient quantities to maintain the health and safety of employees. Where natural means for fresh air supply is inadequate, mechanical ventilation shall be provided. Particular attention shall be given to confined spaces and pockets where heat and fumes may accumulate and employees may be present (roof areas, peaks, basement).

(ii) When salamanders are used in confined spaces, special care shall be taken to provide sufficient ventilation in order to assure proper combustion, maintain the health and safety of employees, and limit temperature rise in the area.

(e) Fueling.

(i) Salamanders shall be refueled only by a person trained in such operations.

(ii) Only a 1 day's supply of heater fuel shall be stored inside a building in the vicinity of the salamander. General fuel storage shall be outside the structure.

(iii) All fuel storage shall be maintained a minimum of 25 feet from source of ignition.

(f) Maintenance.

(i) The user shall comply with the maintenance instructions as provided by the manufacturer.

(ii) Equipment showing evidence of deterioration or damage that constitutes a safety or health hazard shall be removed from service.

(iii) Salamander repairs shall be performed in accordance with the manufacturer's recommendations, and replacement parts shall be equal to, the equivalent of, or the same as the original salamander equipment.

[Statutory Authority: Chapter 49.17 RCW. 94-15-096 (Order 94-07), § 296-155-280, filed 7/20/94, effective 9/20/94; Order 76-29, § 296-155-280, filed 9/30/76; Order 74-26, § 296-155-280, filed 5/7/74, effective 6/6/74.]

PART E
SIGNALING AND FLAGGERS

WAC 296-155-305 Signaling and flaggers.

Definition:

Flagger means a person who provides temporary traffic control.

For the purposes of this chapter, *MUTCD* means the Federal Highway Administration's Manual on Uniform Traffic Control as currently modified and adopted by the Washington state department of transportation.

Link: For the current version of the MUTCD, see the department of transportation's website at http://www.wsdot.wa.gov/biz/trafficoperations/mutcd.htm.

(1) General requirements for signaling and flaggers.

(a) When flaggers are used, employers must first apply the requirements in this section. Then you must set up and use temporary traffic controls according to the guidelines and recommendations in Part VI of the MUTCD.

(b) Job site workers with specific traffic control responsibilities must be trained in traffic control techniques, device usage, and placement.

Note:

• You may purchase copies of the MUTCD by writing:

U.S. Government Printing Office
Superintendent of Documents
Mail Stop: SSOP,
Washington D.C. 20402-9328

• You may view and print a copy of the MUTCD at the following website http://www.wsdot.wa.gov/biz/trafficoperations/mutcd.htm.

(2) When to use flaggers.

(a) Flaggers are to be used only when other reasonable traffic control methods will not adequately control traffic in the work zone.

(b) If signs, signals, and barricades do not provide necessary protection from traffic at work zones and construction sites on or adjacent to a highway or street, then you must use flaggers or other appropriate traffic controls.

(3) Flagger signaling.

(a) Flagger signaling must be with sign paddles approved by WSDOT and conform to guidelines and recommendations of MUTCD.

(b) Sign paddles must comply with the requirements of the MUTCD.

(c) When flagging is done during periods of darkness, sign paddles must be retroreflective or illuminated in the same manner as signs.

(d) During emergency situations, red flags, meeting the specifications of the MUTCD, may be used to draw a driver's attention to particularly hazardous conditions. In nonemergency situations, a red flag may be held in a flagger's free hand to supplement the use of a sign paddle.

(4) Adequate warning of approaching vehicles. Employers must:

• Position work zone flaggers so they are not exposed to traffic or equipment approaching them from behind.

– If this is not possible, then the employer, responsible contractor, and/or project owner must develop and use a method to ensure that flaggers have adequate visual warning of traffic and equipment approaching from behind.

Note: • The following are some optional examples of methods that may be used to adequately warn or protect flaggers:
– Mount a mirror on the flagger's hard hat.
– Use an observer.
– Use "jersey" barriers.

• The department recognizes the importance of adequately trained flaggers and supports industry efforts to improve the quality of flagger training. However, training alone is not sufficient to comply with the statutory requirement of revising flagger safety standards to improve options available that ensure flagger safety and that flaggers have adequate visual warning of objects approaching from behind them.

(5) High-visibility garments for flaggers.

(a) While flagging during daylight hours, a flagger must at least wear, as an outer garment:

• A high-visibility safety garment designed according to Class 2 specifications in ANSI/ISEA 107-1999, American National Standard for High-Visibility Safety Apparel.

– Consisting of at least 775 square inches of background material that are fluorescent yellow-green, fluorescent orange-red or fluorescent red in color;

AND

– 201 square inches of retroreflective material that encircles the torso and is placed to provide 360 degrees visibility around the flagger.

• A high visibility hard hat that is white, yellow, yellow-green, orange or red in color.

Note: A high-visibility garment meets Class 2 specifications if the garment:
• Meets the requirements above;
OR
• Has an ANSI "Class 2" label.

Definition:

For the purpose of this rule, **hours of darkness** means one-half hour before sunset to one-half hour after sunrise.

(b) While flagging during hours of darkness, a flagger must at least wear, as an outer garment:

• A high-visibility safety garment designed according to Class 2 specifications in ANSI/ISEA 107-1999.

– Consisting of at least 775 square inches of background material that are fluorescent yellow-green, fluorescent orange-red or fluorescent red in color;

AND

– 201 square inches of retroreflective material that encircles the torso and is placed to provide 360 degrees visibility around the flagger.

• White coveralls, or other coveralls or trousers that have retroreflective banding on the legs designed according to ANSI/ISEA 107-1999 standards.

• When snow or fog limit visibility, pants, coveralls, or rain gear, meeting these additional requirements must be worn:

- In a highly visible color;

– With retroreflective banding on the legs;

– Designed according to ANSI/ISEA 107-1999.

• A high-visibility hard hat:

– Marked with at least 12 square inches of retroreflective material applied to provide 360 degrees of visibility.

Note: ANSI/ISEA 107-1999 is available by:
• Purchasing copies of ANSI/ISEA 107-1999 by writing:
– American National Standards Institute
11 West 42nd Street
New York, NY 10036
OR
– Contacting the ANSI website at http://web.ansi.org/.
OR
• Reading a copy of ANSI/ISEA 107-1999 at any Washington state library.

(6) Flagger training. Employers must make sure that:

(a) Each flagger has in their possession:

• A valid Washington traffic control flagger card; or

• A valid flagger card from a state such as:

– Oregon;

– Idaho;

– Montana;

OR

– Other states having a flagger training reciprocity agreement with Washington.

(b) The flagger card shows the following:

• Verification that the flagger training required is completed;

• Date the flagger received their flagger training;

• Name of the instructor providing the flagger training;

• Name of the state that issued the flagger card;

• The card's expiration date, not to exceed three years from the date of issuance;

AND

• The flagger's picture or a statement that says "valid with photo ID."

(c) Flagger training is based upon the MUTCD.

Exemption: Personnel that have not completed a flagger-training course may be assigned duties as flaggers only during emergencies. Emergency assignments are temporary and last only until a certified flagger can be put into the position.

Definition:

For the purpose of this rule, **emergency** means an unforeseen occurrence endangering life, limb, or property.

(7) Flagger orientation and traffic control plan.

(a) The employer, responsible contractor or project owner must conduct an orientation that familiarizes the flagger with the job site. This requirement applies each time the flagger is assigned to a new project or when job site conditions change significantly.

The orientation must include, but is not limited to:

• The flagger's role and location on the job site;

• Motor vehicle and equipment in operation at the site;

• Job site traffic patterns;

• Communications and signals to be used between flaggers and equipment operators;

• On-foot escape route;

AND

• Other hazards specific to the job site.

(b) If flaggers are used on a job that will last more than one day, then the employer, responsible contractor and/or project owner must keep on-site, a current site specific traffic control plan. The purpose of this plan is to help move traffic through or around the construction zone in a way that protects the safety of the traveling public, pedestrians and workers.

The plan must include, but is not limited to, the following items when they are appropriate:

• Sign use and placement;

• Application and removal of pavement markings;

• Construction;

• Scheduling;

• Methods and devices for delineation and channelization;

• Placement and maintenance of devices;

• Placement of flaggers;

• Roadway lighting;

• Traffic regulations;

AND

• Surveillance and inspection.

(8) Advance warning signs.

(a) Employers must provide the following on all flagging operations:

• A three sign advance warning sequence on all roadways with a speed limit below 45 mph.

• A four sign advance warning sequence on all roadways with a 45 mph or higher speed limit.

(b) Warning signs must reflect the actual condition of the work zone. When not in use, warning signs must either be taken down or covered.

(c) Employers must make sure to follow Table 1 for spacing of advance warning sign placement.

Table 1. Advanced Warning Sign Spacing

Road Type	Speed	Distances Between Advance Warning Signs*			
		A**	B**	C**	D**
Freeways & Expressways	70 55	1,500 ft.+/- or per the MUTCD.	1,500 ft.+/- or per the MUTCD.	1,500 ft.+/- or per the MUTCD.	1,500 ft.+/- or per the MUTCD.
Rural Highways	65 60	1,000 ft.+/-	1,000 ft.+/-	1,000 ft.+/-	1,000 ft.+/-
Rural Roads	55 45	500 ft.+/-	500 ft.+/-	500 ft.+/-	500 ft.+/-
Rural Roads and Urban Arterials	40 35	350 ft.+/-	350 ft.+/-	350 ft.+/-	N/A
Rural Roads, Urban Streets, Residential Business Districts	30 25	200 ft.***	200 ft.***	200 ft.***	N/A
Urban Streets	25 or less	100 ft.***	100 ft.***	100 ft.***	N/A

* All spacing may be adjusted to accommodate interchange ramps, at-grade intersections, and driveways.

** This refers to the distance between advance warning signs. See Figure 1, Typical Lane Closure on Two-Lane Road. This situation is typical for roadways with speed limits less than 45 mph.

*** This spacing may be reduced in urban areas to fit roadway conditions.

Exemption: In a mobile flagging operation, as defined by the MUTCD when the flagger is moving with the operation, the "flagger ahead (symbol or text)" sign must be:

• Within 1,500 feet of the flagger;

AND

• The flagger station must be seen from the sign.

If terrain does not allow a motorist to see the flagger from the "flagger ahead" sign, the distance between the flagger and the sign must be shortened to allow visual contact, but in no case can the distance be less than the distance specified in Table 1, Advanced Warning Sign Spacing.

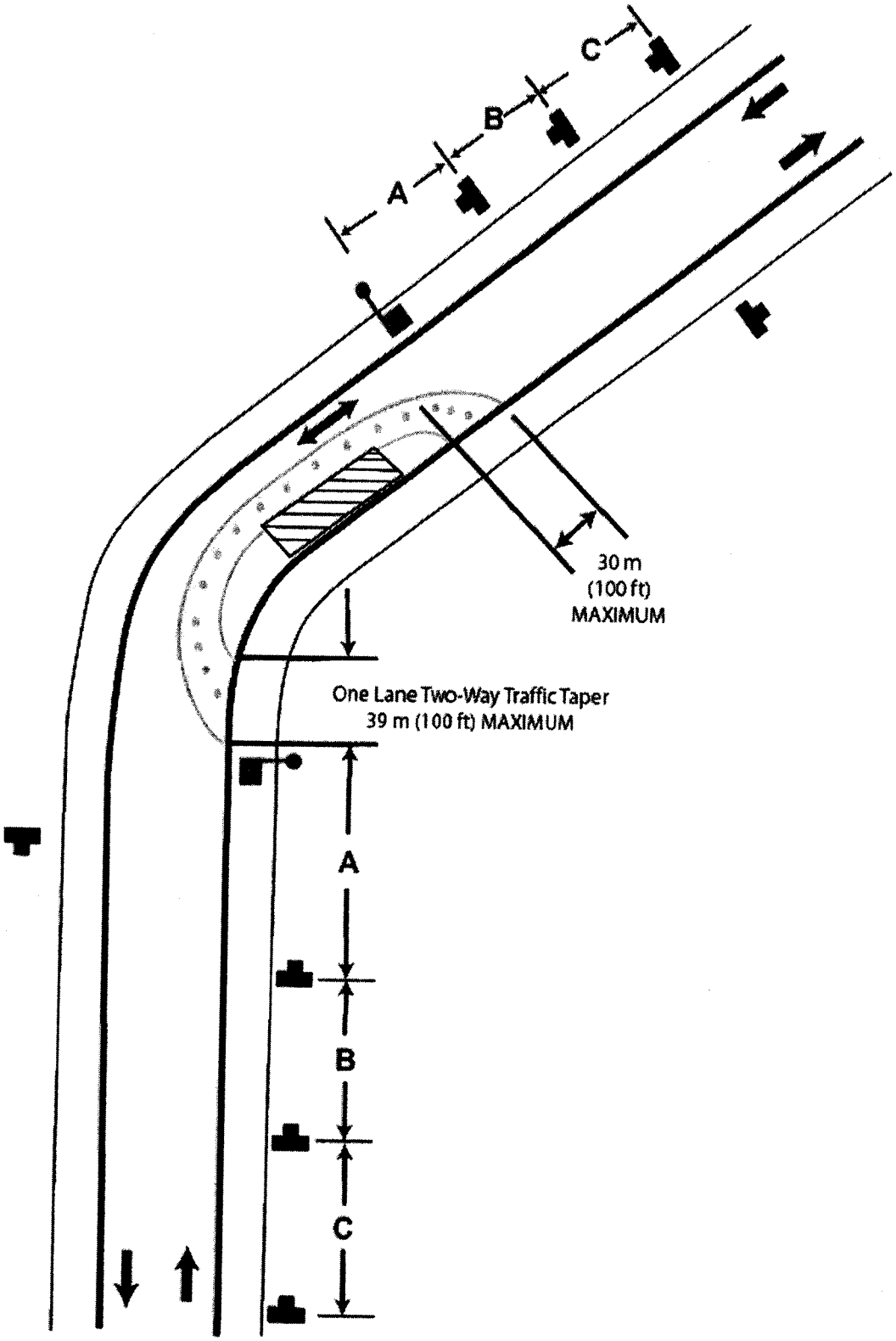

(9) Providing a safe job site for flaggers. Employers, responsible contractors and/or project owners must make sure that:

Follow Table 2 for the distance of the flagger workstation in advance of the work space.

(a) Flagger stations are located far enough in advance of the work space so that the approaching road users will have sufficient distance to stop before entering the work space.

Table 2. Distance of Flagger Station in Advance of the Work Space

Speed* (mph)	Distance (ft)**
20	35
25	55
30	85
35	120
40	170
45	220
50	280
55	335
60	415
65	485

* Posted speed, off-peak 85th-percentile speed prior to work starting or the anticipated operating speed.

** This spacing may be reduced to fit roadway and worksite conditions. Distances greater than those listed in the table are acceptable.

(b) Flaggers stand either on the shoulder adjacent to the road user being controlled or in the closed lane prior to stopping road users. A flagger must only stand in the lane being used by moving road users after road users have stopped.

Definition:

Road user means a vehicle operator, bicyclist, or pedestrian within a public roadway, including workers in temporary traffic control zones.

(c) Flagger workstations are illuminated during hours of darkness by floodlights that do not create glare that poses a hazard for drivers.

Note: To identify potential glare, observe the lighted area from various directions and angles on the main roadway after initial floodlight setup.

Exemption: Emergency situations are exempt from these illumination requirements. For the purpose of this rule, ***emergency*** means an unforeseen occurrence endangering life, limb, or property.

(d) Flaggers are not assigned other duties while engaged in flagging activities.

(e) Flaggers do not use devices that may distract the flagger's vision, hearing, or attention.

• Examples of these devices include cell phones, pagers, radios, and headphones.

• Devices such as two-way radios used for communications between flaggers to direct traffic or ensure flagger safety are acceptable.

(f) Flaggers receive a rest period of at least ten minutes, on the employer's time, for each four hours of working time.

• Rest periods must be scheduled as near as possible to the midpoint of the work period.

• A flagger must not be allowed to work more than three hours without a rest period.

Exemption: Scheduled rest periods are not required where the nature of the work allows a flagger to take intermittent rest periods equivalent to ten minutes for each four hours worked.

[Statutory Authority: RCW 49.17.010, 49.17.040, 49.17.050, 49.17.060. 04-24-089, § 296-155-305, filed 12/1/04, effective 1/1/05; 03-06-075, § 296-155-305, filed 3/4/03, effective 8/1/03. Statutory Authority: RCW 49.17.010, [49.17].040, [49.17].050, 2000 c 239, and chapter 34.05 RCW. 01-04-015, § 296-155-305, filed 1/26/01, effective 2/28/01. Statutory Authority: Chapter 49.17 RCW. 93-19-142 (Order 93-04), § 296-155-305, filed 9/22/93, effective 11/1/93; 93-01-067 (Order 92-15), § 296-155-305, filed 12/11/92, effective 1/15/93; 89-11-035 (Order 89-03), § 296-155-305, filed 5/15/89, effective 6/30/89. Statutory Authority: RCW 49.17.040 and 49.17.050. 86-03-074 (Order 86-14), § 296-155-305, filed 1/21/86; Order 76-6, § 296-155-305, filed 3/1/76; Order 74-26, § 296-155-305, filed 5/7/74, effective 6/6/74.]

WAC 296-155-310 Barricades. Employers must make sure that barricades used for the protection of employees meet the requirements of Part VI of the MUTCD.

[Statutory Authority: RCW 49.17.010, 49.17.040, 49.17.050, 49.17.060. 04-24-089, § 296-155-310, filed 12/1/04, effective 1/1/05; 03-06-075, § 296-155-310, filed 3/4/03, effective 8/1/03. Statutory Authority: Chapter 49.17 RCW. 93-19-142 (Order 93-04), § 296-155-310, filed 9/22/93, effective 11/1/93; Order 74-26, § 296-155-310, filed 5/7/74, effective 6/6/74.]

WAC 296-155-315 Definitions applicable to this part. (1) "Barricade" means an obstruction to deter the passage of persons or vehicles.

(2) "Signs" are the warnings of hazard, temporarily or permanently affixed or placed, at locations where hazards exist.

(3) "Signals" are moving signs, provided by workers, such as flaggers, or by devices, such as flashing lights, to warn of possible or existing hazards.

[Statutory Authority: RCW 49.17.010, 49.17.040, 49.17.050, 49.17.060. 04-24-089, § 296-155-315, filed 12/1/04, effective 1/1/05; 03-06-075, § 296-155-315, filed 3/4/03, effective 8/1/03. Statutory Authority: Chapter 49.17 RCW. 94-15-096 (Order 94-07), § 296-155-315, filed 7/20/94, effective 9/20/94; Order 76-6, § 296-155-315, filed 3/1/76.]

PART F
MATERIAL HANDLING, STORAGE, USE AND DISPOSAL

WAC 296-155-325 General requirements for storage. (1) General.

(a) All materials stored in tiers shall be stacked, racked, blocked, interlocked, or otherwise secured to prevent sliding, falling or collapse.

(b) Maximum safe load limits of floors within buildings and structures, in pounds per square foot, shall be conspicuously posted in all storage areas, except for floor or slab on grade. Maximum safe loads shall not be exceeded.

(c) Aisles and passageways shall be kept clear to provide for the free and safe movement of material handling equipment or employees. Such areas shall be kept in good repair.

(d) When a difference in road or working levels exist, means such as ramps, blocking, or grading shall be used to ensure the safe movement of vehicles between the two levels.

(2) Material storage.

(a)(i) Material stored inside buildings under construction shall not be placed within 6 feet of any hoistway or inside floor openings, nor within 10 feet of an exterior wall which does not extend above the top of the material stored.

(ii) Temporary floors, used in steel erection, concrete forms and shoring (i.e., stripped forms, shoring jacks, clamps, steel rods or pipes, base plates, etc.) placed within close proximity to an open-sided floor for movement to another tier for placement, shall be considered "in-process equipment and subject to the provisions contained in Parts "O" and "P" of this standard. When this type equipment is to be left overnight or for longer periods of time it shall be anchored and braced to prevent displacement in any direction. In addition this equipment shall be subject to the provisions of this subsection while in "interim storage."

(b) Each employee required to work on stored material in silos, hoppers, tanks, and similar storage areas shall be equipped with personal fall arrest equipment meeting the requirements of chapter 296-155 WAC, Part C-1.

(c) Noncompatible materials shall be segregated in storage.

(d) Bagged materials shall be stacked by stepping back the layers and cross-keying the bags at least every 10 bags high.

(i) When cement and lime is delivered in paper bags they shall be carefully handled to prevent the bags bursting.

(ii) Cement and lime bags shall not be piled more than ten bags high except when stored in bins or enclosures built for the purpose of storage.

(iii) When bags are removed from the pile, the length of the pile shall be kept at an even height, and the necessary step backs every five bags maintained.

(iv) Persons handling cement and lime bags shall wear eye protection which prevents contact between the substance and the worker's eyes (such as goggles or other sealed eye protection) and shall wear long sleeve shirts with close fitting collar and cuffs.

(v) Persons shall be warned against wearing clothing that has become hard and stiff with cement.

(vi) Persons shall be instructed to report any susceptibility of their skin to cement and lime burns.

(vii) A hand cream or vaseline and eye wash shall be provided and kept ready for use to prevent burns.

(viii) Lime shall be stored in a dry place to prevent a premature slacking action that may cause fire.

(e) Materials shall not be stored on scaffolds or runways in excess of supplies needed for immediate operations.

(f) Brick stacks shall not be more than 7 feet in height. When a loose brick stack reaches a height of 4 feet, it shall be tapered back 2 inches in every foot of height above the 4-foot level.

(i) Brick shall never be stacked, for storage purposes, on scaffolds or runways.

(ii) When delivering brick on scaffolds inside the wall lines in wheelbarrows, they shall be dumped toward the inside of the building and not toward the wall.

(iii) Blocks shall always be stacked and not thrown in a loose pile.

(g) When masonry blocks are stacked higher than 6 feet, the stack shall be tapered back one-half block per tier above the 6-foot level.

(i) When blocks are stacked inside a building, the piles shall be so distributed as not to overload the floor on which they stand.

(ii) Blocks shall not be dropped or thrown from an elevation or delivered through chutes.

(h) Lumber:

(i) Used lumber shall have all nails withdrawn before stacking.

(ii) Lumber shall be stacked on level and solidly supported sills.

(iii) Lumber shall be so stacked as to be stable and self-supporting.

(iv) Lumber stacks shall not exceed 20 feet in height provided that lumber to be handled manually shall not be stacked more than 16 feet high.

(v) All stored lumber shall be stacked on timber sills to keep it off the ground. Sills shall be placed level on solid supports.

(vi) Cross strips shall be placed in the stacks when they are stacked more than four feet high.

(i) Structural steel, poles, pipe, bar stock, and other cylindrical materials, unless racked, shall be stacked and blocked so as to prevent spreading or tilting.

(i) Persons handling reinforcing steel shall wear heavy gloves.

(ii) When bending of reinforcing steel is done on the job, a strong bench shall be provided, set up on even dry ground or a floor for the persons to work on.

(iii) Structural steel shall be carefully piled to prevent danger of members rolling off or the pile toppling over.

(iv) Structural steel shall be kept in low piles, consideration being given to the sequence of use of the members.

(v) Corrugated and flat iron shall be stacked in flat piles, with the piles not more than four feet high and spacing strips shall be placed between each bundle.

(j) Sand, gravel and crushed stone.

(i) Stock piles shall be frequently inspected to prevent their becoming unsafe by continued adding to or withdrawing from the stock.

(ii) If material becomes frozen, it shall not be removed in a manner that would produce an overhang.

[Statutory Authority: Chapter 49.17 RCW. 95-10-016, § 296-155-325, filed 4/25/95, effective 10/1/95; 94-15-096 (Order 94-07), § 296-155-325, filed 7/20/94, effective 9/20/94. Statutory Authority: RCW 49.17.040 and 49.17.050. 86-03-074 (Order 86-14), § 296-155-325, filed 1/21/86; Order 74-26, § 296-155-325, filed 5/7/74, effective 6/6/74.]

WAC 296-155-329 Qualified person—Rigging. Qualified person - A person who, by possession of a recognized degree or certificate of professional standing, or who, by extensive knowledge, training, and experience, has successfully demonstrated the ability to solve or resolve problems relating to the subject matter.

Also has authorization or authority by the nature of their position to take prompt corrective measures to eliminate them. The person shall be knowledgeable in the requirements of this part.

[Recodified as § 296-155-329, filed 8/4/98, effective 8/4/98. Statutory Authority: RCW 49.17.010, [49.17].040, [49.17].050 and [49.17].060. 98-13-069, § 296-155-229, filed 6/15/98, effective 8/15/98.]

WAC 296-155-330 Rigging equipment for material handling. (1) General.

(a) Rigging equipment for material handling shall be inspected prior to use on each shift and as necessary during its use to ensure that it is safe. Defective rigging equipment shall be removed from service.

(b) Rigging equipment shall not be loaded in excess of its recommended safe working load, as prescribed in Tables F-1 through F-20 in this part and shall comply with ANSI/ASME B30.9-1996.

(c) Rigging equipment, when not in use, shall be removed from the immediate work area so as not to present a hazard to employees.

(d) Special rigging accessories (i.e., spreader bars, grabs, hooks, clamps, etc.) or other lifting accessories shall be

marked with the rated capacity. All components shall be proof-tested to 125 percent of the rated load prior to the first use. Permanent records shall be maintained on the job site for all special rigging accessories.

(2) Alloy steel chains. Chains used for overhead lifting shall be proof tested alloy steel.

(a) Welded alloy steel chain slings shall have permanently affixed durable identification stating size, grade, rated capacity, and sling manufacturer.

(b) Hooks, rings, oblong links, pear-shaped links, welded or mechanical coupling links, or other attachments, when used with alloy steel chains, shall have a rated capacity at least equal to that of the chain.

(c) The use of job or shop hooks and links, or makeshift fasteners, formed from bolts, rods, etc., or other such attachments, shall be prohibited.

(d) Rated capacity (working load limit) for alloy steel chain slings shall conform to the values shown in Table F-1.

(e) Whenever wear at any point of any chain link exceeds that shown in Table F-2, the assembly shall be removed from service.

(f) If at any time any three foot length of chain is found to have stretched one-third the length of a link it shall be discarded.

(g) The practice of placing bolts, nails, or cold shuts between two links to shorten chains is prohibited.

(h) Splicing broken chains by inserting a bolt between two links with the heads of the bolt and the nut sustaining the load, or passing one link through another and inserting a bolt or nail to hold it, is prohibited.

(i) Wherever annealing of chains is attempted, it shall be done in properly equipped annealing furnaces and under the direct supervision of a competent person.

(3) Wire rope.

(a) Table F-3 through F-14 shall be used to determine the safe working loads of various sizes and classifications of improved plow steel wire rope and wire rope slings with various types of terminals. For sizes, classifications, and grades not included in these tables, the safe working load recommended by the manufacturer for specific, identifiable products shall be followed, provided that a safety factor of not less than 5 is maintained.

(b) Protruding ends of strands in splices on slings and bridles shall be covered or blunted.

(c) Wire rope shall not be secured by knots.

(d) The following limitations shall apply to the use of wire rope:

(i) An eye splice made in any wire rope shall have not less than three full tucks.

Note: This requirement shall not preclude the use of another form of splice or connection which can be shown to be as efficient and which is not otherwise prohibited.

(ii) Except for eye splices in the ends of wires and for endless rope slings, each wire rope used in hoisting or lowering, or in pulling loads, shall consist of one continuous piece without knot or splice.

(iii) Wire rope shall not be used, if in any length of eight diameters, the total number of visible broken wires exceeds 10 percent of the total number of wires, or if the rope shows other signs of excessive wear, corrosion, or defect.

(e) When U-bolt wire rope clips are used to form eyes, Table F-20 shall be used to determine the number and spacing of clips.

(f) When used for eye splices, the U-bolt shall be applied so that the "U" section is in contact with the dead end of the rope.

(g) U-Bolt wire rope clips shall be made of drop-forged steel.

Note: See Table F-20 for number of clamps and spacing requirements.

CORRECT METHOD OF ATTACHING WIRE ROPE CLIPS

U-Bolt of all clips on dead end of rope

(h) Slings shall not be shortened with knots or bolts or other makeshift devices.

(i) Thimbles shall be used in cable eyes whenever practicable.

(j) The clamp nuts shall be tightened up frequently during the operation to prevent slipping.

(4) Natural rope, and synthetic fiber.

(a) General. When using natural or synthetic fiber rope slings, Tables F-15, F-16, F-17 and F-18 shall apply.

(b) All splices in rope slings provided by the employer shall be made in accordance with fiber rope manufacturers' recommendations.

(i) In manila rope, eye splices shall contain at least three full tucks, and short splices shall contain at least six full tucks (three on each side of the centerline of the splice).

(ii) In layed synthetic fiber rope, eye splices shall contain at least four full tucks, and short splices shall contain at least eight full tucks (four on each side of the centerline of the splice).

(iii) Strand end tails shall not be trimmed short (flush with the surface of the rope) immediately adjacent to the full tucks. This precaution applies to both eye and short splices and all types of fiber rope. For fiber ropes under 1-inch diameter, the tails shall project at least six rope diameters beyond the last full tuck. For fiber ropes 1-inch diameter and larger, the tails shall project at least 6 inches beyond the last full tuck. In applications where the projecting tails may be objectionable, the tails shall be tapered and spliced into the body of the rope using at least two additional tucks (which will require a tail length of approximately six rope diameters beyond the last full tuck).

(iv) For all eye splices, the eye shall be sufficiently large to provide an included angle of not greater than 60° at the splice when the eye is placed over the load or support.

(v) Knots shall not be used in lieu of splices.

(vi) All fibre rope used for hoisting purposes or for the support of scaffolds, or any part thereof, shall be of high grade Manila hemp (abaca). Fibre rope used for the support of scaffolds, or any part thereof, except rope used for lashing or tying purposes, shall be not less than 3/4-inch in diameter.

(vii) The maximum safe working load for fibre rope shall not exceed the maximum strength as shown in the following table:

STRENGTH OF HIGH GRADE MANILA (ABACA) ROPE
COMMON LAY THREE STRAND

Approximate Diameter in inches	Circumference in inches	Safe Load in Pounds
3/16 (6 yarns)	1/2	98
1/4 (6 yarns)	3/4	116
5/16 (6 yarns)	1	200
3/8 (12 yarns)	1 1/8	241
7/16 (15 yarns)	1 1/4	291
15/32 (18 yarns)	1 3/8	350
1/2 (21 yarns)	1 1/2	408
9/16	1 3/4	526
5/8	2	666
3/4	2 1/4	816
13/16	2 1/2	983
7/8	2 3/4	1,166
1	3	1,366
1 1/16	3 1/4	1,683
1 1/8	3 1/2	1,833
1 1/4	3 3/4	2,083
1 5/16	4	2,365
1 3/8	4 1/4	2,666
1 1/2	4 1/2	2,916

Note: This table is based on data contained in the U.S. Department of Commerce circular of the Bureau of Standards, No. 324.

(5) Synthetic webbing (nylon, polyester, and polypropylene).

(a) The employer shall have each synthetic web sling marked or coded to show:

(i) Name or trademark of manufacturer.

(ii) Rated capacities for the type of hitch.

(iii) Type of material.

(b) Rated capacity shall not be exceeded.

(6) Shackles and hooks.

(a) Table F-19 shall be used to determine the safe working loads of various sizes of shackles, except that higher safe working loads are permissible when recommended by the manufacturer for specific, identifiable products, provided that a safety factor of not less than 5 is maintained.

(b) The manufacturer's recommendations shall be followed in determining the safe working loads of the various sizes and types of specific and identifiable hooks. All hooks for which no applicable manufacturer's recommendations are available shall be tested to twice the intended safe working load before they are initially put into use. The employer shall maintain a record of the dates and results of such tests.

(c) Hooks shall not be modified by welding and/or drilling unless written approval by the manufacturer has been received.

(d) No open hook shall be used to hoist a bucket, cage, spreader, or skip, nor in any circumstances where the dislodgment of the hook could cause a risk of injury to workers. A safety-hook, mousing, or shackle shall be employed in such circumstances.

(e) When shackles are used, shackle pins shall be secured to prevent accidental withdrawal.

(7) Slings.

(a) When slings are provided as a part of the hoisting equipment, every precaution shall be taken to keep them in a serviceable condition.

(i) Wire rope slings shall be frequently inspected and oiled.

(ii) Slings shall not be left where they can be damaged by traffic or form stumbling hazards.

(iii) Blocks or heavy bagging shall be used at corners of the load to protect the sling from sharp bending.

(iv) Wire rope which has been welded or been subject to welding of any kind shall not be used.

(v) The wire rope shall not be burned off with heat. This may weld the ends of the wires and strands together.

(b) When a load is lifted by a multiple rope sling the sling shall be so arranged that the strain can be equalized between the ropes.

(i) When using a sling with both ends engaged in the hoisting block, the sling shall be adjusted so as to equalize the stress.

(ii) Slings shall be placed on the load at safe lifting angles.

(8) Material handling—General.

(a) When necessary to store building material on public thoroughfares, care shall be exercised to see that it is so piled or stacked as to be safe against collapse or falling over.

(b) Material shall be so located as not to interfere with, or present a hazard to employees, traffic or the public.

(9) Placing and removal of forms.

(a) When moved or raised by crane, cableway, A-frame, or similar mechanical device, forms shall be securely attached to slings having a minimum safety factor of five. Use of No. 9 tie wire, fiber rope, and similar makeshift lashing shall be prohibited.

(b) Taglines shall be used in moving panels or other large sections of forms by crane or hoist.

(c) All hoisting equipment, including hoisting cable used to raise and move forms shall have a minimum safety factor incorporated in the manufacturer's design, and the manufacturer's recommended loading shall not be exceeded. Field-fabricated or shop-fabricated hoisting equipment shall be designed or approved by a registered professional engineer, incorporating a minimum safety factor of five in its design. Panels and built-up form sections shall be equipped with metal hoisting brackets for attachment of slings.

(10) Precast concrete and tilt-up operations.

(a) It shall be the responsibility of the contractor to use accessories which are designed to be compatible.

(b) The design capacity of all lifting devices and accessories shall be known. The devices and accessories with the appropriate capacity shall be used.

(c) Prior to pouring the panels of a tilt-up type construction job, a set of plans or job specifications, including lifting procedures, shall be drawn up.

(i) These plans shall be at the job site and made available upon request.

(ii) Any changes made in the rigging procedure of a tilt-up panel or slab shall provide the same degree of safety as required by the original plans.

(iii) The plans or specifications shall contain the following information:

(A) The type, size, and location of all lifting inserts.

(B) The type, size, and location of all brace inserts or fittings for guy wires in each panel and floor or support.

(C) The size of braces or guys to be used.

(D) The compression strength which concrete panels must attain prior to being lifted.

(iv) The following conditions shall be included in the erection process and shall be incorporated in the design plan:

(A) Inserts to be installed for lifting sections of tilt-up precast panels shall be designed mechanically to maintain a safety factor of three.

(B) Lifting inserts which are embedded or otherwise attached to precast concrete members, other than the tilt-up members, shall be capable of supporting at least four times the maximum intended load applied or transmitted to them.

(C) The compression strength of the concrete shall be such that when the proper type, size, and amount of inserts are installed a minimum safety factor of two will be maintained.

(v) Lifting hardware shall be capable of supporting at least five times the maximum intended load applied or transmitted to the lifting hardware.

(vi) Lifting bolts or other lifting devices which have been bent, worn, or are otherwise defective shall be discarded.

(vii) Manufactured products shall not be altered in a manner which would reduce the safe working load to less than its original value.

(viii) Inserts shall be positioned so that bolts, or lifting devices, when inserted, will be perpendicular to the face on which they are placed.

(d) Design of the panels and layout of the pour shall be made in such a manner so that when picking, the top of the panel will be away from the crane. If this is not possible, the contractor shall consult with a representative of the department and the crane company involved to determine the procedure to be followed in lifting and placing in its permanent position safely. Panels shall be lifted and handled in such a manner that they will not strike the hoisting equipment, in case of failure.

(e) A qualified rigging person shall be designated and shall consult with the crane operator on lifting procedures prior to making the pick. The qualified rigging person shall be located in such a position during the pick of the panel that they can observe both the crane operator and the employees working in the immediate area.

(11) Rigging in prestressed and post tensioned.

(a) Stressed members shall be handled at pick points specifically designated on the manufacturer's drawings.

(b) Stressed members shall be lifted with lifting devices recommended by the manufacturer or the engineer in charge.

(c) No one shall be allowed under stressed members during lifting and erection.

[Statutory Authority: RCW 49.17.010, [49.17].040, [49.17].050 and [49.17].060. 98-13-069, § 296-155-330, filed 6/15/98, effective 8/15/98. Statutory Authority: Chapter 49.17 RCW. 94-15-096 (Order 94-07), § 296-155-330, filed 7/20/94, effective 9/20/94. Statutory Authority: RCW 49.17.040 and 49.17.050. 86-03-074 (Order 86-14), § 296-155-330, filed 1/21/86. Statutory Authority: RCW 49.17.040, 49.17.150, and 49.17.240. 79-08-115 (Order 79-9), § 296-155-330, filed 7/31/79; Order 76-29, § 296-155-330, filed 9/30/76; Order 74-26, § 296-155-330, filed 5/7/74, effective 6/6/74.]

WAC 296-155-335 Disposal of waste materials. (1) Whenever materials are dropped more than 20 feet to any point lying outside the exterior walls of the building, an enclosed chute of wood, or equivalent material, shall be used. For the purpose of this subsection, an enclosed chute is a slide, closed in on all sides, through which material is moved from a high place to a lower one.

(2) When debris is dropped without the use of chutes, the area onto which the material is dropped shall be completely enclosed with barricades not less than 42 inches high and not less than 20 feet back from the projected edge of the opening above. Signs warning of the hazard of falling materials shall be posted at each level. Removal shall not be permitted in this lower area until debris handling ceases above.

(3) All scrap lumber, waste material, and rubbish shall be removed from the immediate work area as the work progresses.

(4) Disposal of waste material or debris by burning shall comply with local fire regulations.

(5) All solvent waste, oily rags, and flammable liquids shall be kept in fire resistant covered containers until removed from the worksite.

[Statutory Authority: RCW 49.17.040 and 49.17.050. 86-03-074 (Order 86-14), § 296-155-335, filed 1/21/86; Order 74-26, § 296-155-335, filed 5/7/74, effective 6/6/74.]

WAC 296-155-34901 Table F-1.

TABLE F-1
RATED CAPACITY (WORKING LOAD LIMIT),
FOR ALLOY STEEL CHAIN SLINGS*
RATED CAPACITY
(WORKING LOAD LIMIT), POUNDS

TABLE F-1: PART 1—Double Slings

		Double Sling Vertical Angle[1]		
		30 degree	45 degree	60 degree
		Horizontal Angle[2]		
Chain Size, Inches	Single Branch Sling - 90 degrees Loading	60 degree	45 degree	30 degree
1/4	3,250	5,560	4,550	3,250
3/8	6,600	11,400	9,300	6,600
1/2	11,250	19,500	15,900	11,250
5/8	16,500	28,500	23,300	16,500
3/4	23,000	39,800	32,500	23,000
7/8	28,750	49,800	40,600	28,750
1	38,750	67,100	54,800	38,750
1-1/8	44,500	77,000	63,000	44,500
1-1/4	57,500	99,500	81,000	57,500
1-3/8	67,000	116,000	94,000	67,000
1-1/2	80,000	138,000	112,500	80,000
1-3/4	100,000	172,000	140,000	100,000

TABLE F-1: PART 2—Triple and Quadruple Slings

		Triple and Quadruple Sling Vertical Angle [1]		
		30 degree	45 degree	60 degree
		Horizontal Angle[2]		
Chain Size, Inches	Single Branch Sling - 90 degrees Loading	60 degree	45 degree	30 degree
1/4	3,250	8,400	6,800	4,900
3/8	6,600	17,000	14,000	9,900
1/2	11,250	29,000	24,000	17,000
5/8	16,000	43,000	35,000	24,500
3/4	23,000	59,500	48,500	34,500
7/8	28,750	74,500	61,000	43,000
1	38,750	101,000	82,000	58,000
1-1/8	44,500	115,500	94,500	66,500
1-1/4	57,500	149,000	121,500	86,000
1-3/8	67,000	174,000	141,000	100,500
1-1/2	80,000	207,000	169,000	119,500
1-3/4	100,000	258,000	210,000	150,000

[1] Rating of multileg slings adjusted for angle of loading measured as the included angle between the inclined leg and the vertical.

[2] Rating of multileg slings adjusted for angle of loading between the inclined leg and the horizontal plane of the load.

* Other grades of proof tested steel chain include proof coil, BBB coil and hi-test chain. These grades are not recommended for overhead lifting and therefore are not covered by this standard.

[Order 74-26, § 296-155-335 (part), Table F-1 (codified as WAC 296-155-34901), filed 5/7/74, effective 6/6/74.]

WAC 296-155-34902 Table F-2.

TABLE F-2
MAXIMUM ALLOWABLE WEAR AT ANY POINT OF LINK

Chain Size (inches)	Maximum Allowable Wear (inch)
1/4	3/64
3/8	5/64
1/2	7/64
5/8	9/64
3/4	5/32
7/8	11/64
1	3/16
1 1/8	7/32
1 1/4	1/4
1 3/8	9/32
1 1/2	5/16
1 3/4	11/32

[Order 74-26, § 296-155-335 (part), Table F-2 (codified as WAC 296-155-34902), filed 5/7/74, effective 6/6/74.]

WAC 296-155-34903 Table F-3.

TABLE F-3
RATED CAPACITIES FOR SINGLE LEG SLINGS
6 x 19 and 6 x 37 CLASSIFICATION
IMPROVED PLOW STEEL GRADE ROPE
WITH FIBER CORE (FC)

Rope Dia. (Inches)	Constr.	Rated Capacities, Tons (2,000 lb) Vertical HT	Vertical MS	Vertical S	Choker HT	Choker MS	Choker S	Vertical Basket* HT	Vertical Basket* MS	Vertical Basket* S
1/4	6x19	0.49	0.51	0.55	0.37	0.38	0.41	0.99	1.0	1.1
5/16	6x19	0.76	0.79	0.85	0.57	0.59	0.64	1.5	1.6	1.7
3/8	6x19	1.1	1.1	1.2	0.80	0.85	0.91	2.1	2.2	2.4
7/16	6x19	1.4	1.5	1.6	1.1	1.1	1.2	2.9	3.0	3.3
1/2	6x19	1.8	2.0	2.1	1.4	1.5	1.6	3.7	3.9	4.3
9/16	6x19	2.3	2.5	2.7	1.7	1.9	2.0	4.6	5.0	5.4
5/8	6x19	2.8	3.1	3.3	2.1	2.3	2.5	5.6	6.2	6.7
3/4	6x19	3.9	4.4	4.8	2.9	3.3	3.6	7.8	8.8	9.5
7/8	6x19	5.1	5.9	6.4	3.9	4.5	4.8	10.0	12.0	13.0
1	6x19	6.7	7.7	8.4	5.0	5.8	6.3	13.0	15.0	17.0
1 - 1/8	6x19	8.4	9.5	10.0	6.3	7.1	7.9	17.0	19.0	21.0
1 - 1/4	6x37	9.8	11.0	12.0	7.4	8.3	9.2	20.0	22.0	25.0
1 - 3/8	6x37	12.0	13.0	15.0	8.9	10.0	11.0	24.0	27.0	30.0
1 - 1/2	6x37	14.0	16.0	17.0	10.0	12.0	13.0	28.0	32.0	35.0
1 - 5/8	6x37	16.0	18.0	21.0	12.0	14.0	15.0	33.0	37.0	41.0
1 - 3/4	6x37	19.0	21.0	24.0	14.0	16.0	18.0	38.0	43.0	48.0
2	6x37	25.0	28.0	31.0	18.0	21.0	23.0	49.0	55.0	62.0

HT = Hand tucked splice and hidden tuck splice. For hidden tuck splice (IWRC) use value in HT column.
MS = Mechanical splice.
S = Swaged or zinc poured socket.
* These values only apply when the D/d ratio for HT slings is 10 or greater, and for MS and S slings is 20 or greater where:
D = Diameter of curvature around which the body of the sling is bent.
d = Diameter of rope.

[Order 74-26, § 296-155-335 (part), Table F-3 (codified as WAC 296-155-34903), filed 5/7/74, effective 6/6/74.]

WAC 296-155-34904 Table F-4.

TABLE F-4
RATED CAPACITIES FOR SINGLE LEG SLINGS
6 x 19 and 6 x 37 CLASSIFICATION
IMPROVED PLOW STEEL GRADE ROPE
WITH INDEPENDENT WIRE ROPE CORE (IWRC)

Rope Dia. (Inches)	Constr.	Rated Capacities, Tons (2,000 lb.) Vertical HT	Vertical MS	Vertical S	Choker HT	Choker MS	Choker S	Vertical Basket* HT	Vertical Basket* MS	Vertical Basket* S
1/4	6x19	0.53	0.56	0.59	0.40	0.42	0.44	1.0	1.1	1.2
5/16	6x19	0.81	0.87	0.92	0.61	0.65	0.69	1.6	1.7	1.8
3/8	6x19	1.1	1.2	1.3	0.86	0.93	0.98	2.3	2.5	2.6
7/16	6x19	1.5	1.7	1.8	1.2	1.3	1.3	3.1	3.4	3.5
1/2	6x19	2.0	2.2	2.3	1.5	1.6	1.7	3.9	4.4	4.6
9/16	6x19	2.5	2.7	2.9	1.8	2.1	2.2	4.9	5.5	5.8
5/8	6x19	3.0	3.4	3.6	2.2	2.5	2.7	6.0	6.8	7.2
3/4	6x19	4.2	4.9	5.1	3.1	3.6	3.8	8.4	9.7	10.0
7/8	6x19	5.5	6.6	6.9	4.1	4.9	5.2	11.0	13.0	14.0
1	6x19	7.2	8.5	9.0	5.4	6.4	6.7	14.0	17.0	18.0
1- 1/8	6x19	9.0	10.0	11.0	6.8	7.8	8.5	18.0	21.0	23.0
1- 1/4	6x37	10.0	12.0	13.0	7.9	9.2	9.9	21.0	24.0	26.0
1- 3/8	6x37	13.0	15.0	16.0	9.6	11.0	12.0	25.0	29.0	32.0
1- 1/2	6x37	15.0	17.0	19.0	11.0	13.0	14.0	30.0	35.0	38.0
1- 5/8	6x37	18.0	20.0	22.0	13.0	15.0	17.0	35.0	41.0	44.0
1- 3/4	6x37	20.0	24.0	26.0	15.0	18.0	19.0	41.0	47.0	51.0
2	6x37	26.0	30.0	33.0	20.0	23.0	25.0	53.0	61.0	66.0

HT = Hand tucked splice. For hidden tuck splice (IWRC) use Table F3 values in HT column.
MS = Mechanical splice.
S = Swaged or zinc poured socket.
* These values only apply when the D/d ratio for HT slings is 10 or greater, and for MS and S slings is 20 or greater where:
D = Diameter of curvature around which the body of the sling is bent.
d = Diameter of rope.

[Order 74-26, § 296-155-335 (part), Table F-4 (codified as WAC 296-155-34904), filed 5/7/74, effective 6/6/74.]

WAC 296-155-34905 Table F-5.

TABLE F-5
RATED CAPACITIES FOR SINGLE LEG SLINGS
CABLE LAND ROPE -
MECHANICAL SPLICE ONLY
7 x 7 x 7 & 7 x 7 x 19 CONSTRUCTIONS
GALVANIZED AIRCRAFT GRADE ROPE
7 x 6 x 19 IWRC CONSTRUCTION
IMPROVED PLOW STEEL GRADE ROPE

Rope Dia. (Inches)	Constr.	Rated Capacities, Tons (2,000 lb) Vertical	Choker	Vertical Basket*
1/4	7x7x7	0.50	0.38	1.0
3/8	7x7x7	1.1	.81	2.2
1/2	7x7x7	1.8	1.4	3.7
5/8	7x7x7	2.8	2.1	5.5
3/4	7x7x7	3.8	2.9	7.6
5/8	7x7x19	2.9	2.2	5.8
3/4	7x7x19	4.1	3.0	8.1
7/8	7x7x19	5.4	4.0	11.0
1	7x7x19	6.9	5.1	14.0
1-1/8	7x7x19	8.2	6.2	16.0
1-1/4	7x7x19	9.9	7.4	20.0
3/4	7x6x19 IWRC	3.8	2.8	7.6
7/8	7x6x19 IWRC	5.0	3.8	10.0
1	7x6x19 IWRC	6.4	4.8	13.0
1-1/8	7x6x19 IWRC	7.7	5.8	15.0
1-1/4	7x6x19 IWRC	9.2	6.9	18.0
1-5/16	7x6x19 IWRC	10.0	7.5	20.0
1-3/8	7x6x19 IWRC	11.0	8.2	22.0
1-1/2	7x6x19 IWRC	13.0	9.6	26.0

0 These values only apply when the D/d ratio is 10 or greater where:
D = Diameter of curvature around which the body of the sling is bent.
d = Diameter of rope.

[Order 74-26, § 296-155-335 (part), Table F-5 (codified as WAC 296-155-34905), filed 5/7/74, effective 6/6/74.]

WAC 296-155-34906 Table F-6.

TABLE F-6
RATED CAPACITIES FOR SINGLE LEG SLINGS 8-PART AND 6-PART BRAIDED ROPE 6 x 7 AND 6 x 19 CONSTRUCTION IMPROVED PLOW STEEL GRADE ROPE 7 x 7 CONSTRUCTION GALVANIZED AIRCRAFT GRADE ROPE

Component Ropes		Rated Capacities, Tons (2,000 lb)					
Diameter		Vertical		Choker		Basket Vertical to 30 degrees*	
(inches)	Constr.	8-Part	6-Part	8-Part	6-Part	8-Part	6-Part
3/32	6 x 7	0.42	0.32	0.32	0.24	0.74	0.55
1/8	6 x 7	0.76	0.57	0.57	0.42	1.3	0.98
3/16	6 x 7	1.7	1.3	1.3	0.94	2.9	2.2
3/32	7 x 7	0.51	0.39	0.38	0.29	0.89	0.67
1/8	7 x 7	0.95	0.71	0.71	0.53	1.6	1.2
3/16	7 x 7	2.1	1.5	1.5	1.2	3.6	2.7
3/16	6 x 19	1.7	1.3	1.3	0.98	3.0	2.2
1/4	6 x 19	3.1	2.3	2.3	1.7	5.3	4.0
5/16	6 x 19	4.8	3.6	3.6	2.7	8.3	6.2
3/8	6 x 19	6.8	5.1	5.1	3.8	12.0	8.9
7/16	6 x 19	9.3	6.9	6.9	5.2	16.0	12.0
1/2	6 x 19	12.0	9.0	9.0	6.7	21.0	15.0
9/16	6 x 19	15.0	11.0	11.0	8.5	26.0	20.0
5/8	6 x 19	19.0	14.0	14.0	10.0	32.0	24.0
3/4	6 x 19	27.0	20.0	20.0	15.0	46.0	35.0
7/8	6 x 19	36.0	27.0	27.0	20.0	62.0	47.0
1	6 x 19	47.0	35.0	35.0	26.0	81.0	61.0

* These values only apply when the D/d ratio is 20 or greater where:
D = Diameter of curvature around which the body of the sling is bent.
d = Diameter of component rope.

[Order 74-26, § 296-155-335 (part), Table F-6 (codified as WAC 296-155-34906), filed 5/7/74, effective 6/6/74.]

WAC 296-155-34907 Table F-7.

TABLE F-7
RATED CAPACITIES FOR 2-LEG
& 3-LEG BRIDLE SLINGS
6 x 19 AND 6 x 37 CLASSIFICATION
IMPROVED PLOW STEEL GRADE ROPE
WITH FIBER CORE (FC)

TABLE F-7: PART 1—2-Leg Bridle Slings

Rope		Rated Capacities, Tons (2,000 lb) 2-Leg Bridle Slings					
Dia.		Vert 30 degree Horz 60 degree		45 degree Angle		Vert 60 degree Horz 30 degree	
(Inches)	Constr.	HT	MS	HT	MS	HT	MS
1/4	6 x 19	0.85	0.88	0.70	0.72	0.49	0.51
5/16	6 x 19	1.3	1.4	1.1	1.1	0.76	0.79
3/8	6 x 19	1.8	1.9	1.5	1.6	1.1	1.1
7/16	6 x 19	2.5	2.6	2.0	2.2	1.4	1.5
1/2	6 x 19	3.2	3.4	2.6	2.8	1.8	2.0
9/16	6 x 19	4.0	4.3	3.2	3.5	2.3	2.5
5/8	6 x 19	4.8	5.3	4.0	4.4	2.8	3.1
3/4	6 x 19	6.8	7.6	5.5	6.2	3.9	4.4
7/8	6 x 19	8.9	10.0	7.3	8.4	5.1	5.9
1	6 x 19	11.0	13.0	9.4	11.0	6.7	7.7
1- 1/8	6 x 19	14.0	16.0	12.0	13.0	8.4	9.5
1- 1/4	6 x 37	17.0	19.0	14.0	16.0	9.8	11.0
1- 3/8	6 x 37	20.0	23.0	17.0	19.0	12.0	13.0
1- 1/2	6 x 37	24.0	27.0	20.0	22.0	14.0	16.0
1- 5/8	6 x 37	28.0	32.0	23.0	26.0	16.0	18.0
1- 3/4	6 x 37	33.0	37.0	27.0	30.0	19.0	21.0
2	6 x 37	43.0	48.0	35.0	39.0	25.0	28.0

HT = Hand tucked splice.
MS = Mechanical splice.

TABLE F-7: PART 2—3-Leg Bridle Slings

Rope		Rated Capacities, Tons (2,000 lb) 3-Leg Bridle Slings					
Dia.		Vert 30 degree Horz 60 degree		45 degree Angle		Vert 60 degree Horz 30 degree	
(Inches)	Constr.	HT	MS	HT	MS	HT	MS
1/4	6 x 19	1.3	1.3	1.0	1.1	0.74	0.7
5/16	6 x 19	2.0	2.0	1.6	1.7	1.1	1.2
3/8	6 x 19	2.8	2.9	2.3	2.4	1.6	1.7
7/16	6 x 19	3.7	4.0	3.0	3.2	2.1	2.3
1/2	6 x 19	4.8	5.1	3.9	4.2	2.8	3.0
9/16	6 x 19	6.0	6.5	4.9	5.3	3.4	3.7
5/8	6 x 19	7.3	8.0	5.9	6.5	4.2	4.6
3/4	6 x 19	10.0	11.0	8.3	9.3	5.8	6.6
7/8	6 x 19	13.0	15.0	11.0	13.0	7.7	8.9
1	6 x 19	17.0	20.0	14.0	16.0	10.0	11.0
1- 1/8	6 x 19	22.0	24.0	18.0	20.0	13.0	14.0
1- 1/4	6 x 37	25.0	29.0	21.0	23.0	15.0	17.0
1- 3/8	6 x 37	31.0	35.0	25.0	28.0	18.0	20.0
1- 1/2	6 x 37	36.0	41.0	30.0	33.0	21.0	24.0
1- 5/8	6 x 37	43.0	48.0	35.0	39.0	25.0	28.0
1- 3/4	6 x 37	49.0	56.0	40.0	45.0	28.0	32.0
2	6 x 37	64.0	72.0	52.0	59.0	37.0	41.0

HT = Hand tucked splice.
MS = Mechanical splice.

[Order 74-26, § 296-155-335 (part), Table F-7 (codified as WAC 296-155-34907), filed 5/7/74, effective 6/6/74.]

WAC 296-155-34908 Table F-8.

TABLE F-8
RATED CAPACITIES FOR 2-LEG
& 3-LEG BRIDLE SLINGS
6 x 19 AND 6 x 37 CLASSIFICATION
IMPROVED PLOW STEEL GRADE ROPE
WITH INDEPENDENT WIRE
ROPE CORE (IWRC)

TABLE F-8: PART 1—2-Leg Bridle Slings

Rope		Rated Capacities, Tons (2,000 lb) 2-Leg Bridle Slings					
Dia.		Vert 30 degree Horz 60 degree		45 degree Angle		Vert 60 degree Horz 30 degree	
(Inches)	Constr.	HT	MS	HT	MS	HT	MS
1/4	6 x 19	0.92	0.97	0.75	0.79	0.53	0.56
5/16	6 x 19	1.4	1.5	1.1	1.2	1.81	0.87
3/8	6 x 19	2.0	2.1	1.6	1.8	1.1	1.2
7/16	6 x 19	2.7	2.9	2.2	2.4	1.5	1.7
1/2	6 x 19	3.4	3.8	2.8	3.1	2.0	2.2
9/16	6 x 19	4.3	4.8	3.5	3.9	2.5	2.7
5/8	6 x 19	5.2	5.9	4.2	4.8	3.0	3.4
3/4	6 x 19	7.3	8.4	5.9	6.9	4.2	4.9
7/8	6 x 19	9.6	11.0	7.8	9.3	5.5	6.6
1	6 x 19	12.0	15.0	10.0	12.0	7.2	8.5
1- 1/8	6 x 19	16.0	18.0	13.0	15.0	9.0	10.0
1- 1/4	6 x 37	18.0	21.0	15.0	17.0	10.0	12.0
1- 3/8	6 x 37	22.0	25.0	18.0	21.0	13.0	15.0
1- 1/2	6 x 37	26.0	30.0	21.0	25.0	15.0	17.0
1- 5/8	6 x 37	31.0	35.0	25.0	29.0	18.0	20.0
1- 3/4	6 x 37	35.0	41.0	29.0	33.0	20.0	24.0
2	6 x 37	46.0	53.0	37.0	43.0	26.0	30.0

HT = Hand tucked splice.
MS = Mechanical splice.

TABLE F-8: PART 2—3-Leg Bridle Slings

Rope		Rated Capacities, Tons (2,000 lb) 3-Leg Bridle Slings					
Dia.		Vert 30 degree Horz 60 degree		45 degree Angle		Vert 60 degree Horz 30 degree	
(Inches)	Constr.	HT	MS	HT	MS	HT	MS
1/4	6 x 19	1.4	1.4	1.1	1.2	0.79	0.84
5/16	6 x 19	2.1	2.3	1.7	1.8	1.2	1.3
3/8	6 x 19	3.0	3.2	2.4	2.6	1.7	1.9
7/16	6 x 19	4.0	4.4	3.3	3.6	2.3	2.5
1/2	6 x 19	5.1	5.7	4.2	4.6	3.0	3.3

Rope		Rated Capacities, Tons (2,000 lb) 3-Leg Bridle Slings					
Dia. (Inches)	Constr.	Vert 30 degree Horz 60 degree		45 degree Angle		Vert 60 degree Horz 30 degree	
		HT	MS	HT	MS	HT	MS
9/16	6 x 19	6.4	7.1	5.2	5.8	3.7	4.1
5/8	6 x 19	7.8	8.8	6.4	7.2	4.5	5.1
3/4	6 x 19	11.0	13.0	8.9	10.0	6.3	7.3
7/8	6 x 19	14.0	17.0	12.0	14.0	8.3	9.9
1	6 x 19	19.0	22.0	15.0	18.0	11.0	13.0
1- 1/8	6 x 19	23.0	27.0	19.0	22.0	13.0	16.0
1- 1/4	6 x 37	27.0	32.0	22.0	26.0	16.0	18.0
1- 3/8	6 x 37	33.0	38.0	27.0	31.0	19.0	22.0
1- 1/2	6 x 37	39.0	45.0	32.0	37.0	23.0	26.0
1- 5/8	6 x 37	46.0	53.0	38.0	43.0	27.0	31.0
1- 3/4	6 x 37	53.0	61.0	43.0	50.0	31.0	35.0
2	6 x 37	68.0	79.0	56.0	65.0	40.0	46.0

HT = Hand tucked splice
MS = Mechanical splice

[Order 74-26, § 296-155-335 (part), Table F-8 (codified as WAC 296-155-34908), filed 5/7/74, effective 6/6/74.]

WAC 296-155-34909 Table F-9.

TABLE F-9
RATED CAPACITIES FOR 2-LEG
AND 3-LEG BRIDLE SLINGS
CABLE LAID ROPE -
MECHANICAL SPLICE ONLY
7 x 7 x 7 AND 7 x 7 x 19 CONSTRUCTIONS
GALVANIZED AIRCRAFT GRADE ROPE
7 x 6 x 19 IWRC CONSTRUCTION IMPROVED
PLOW STEEL GRADE ROPE

TABLE F-9: PART 1—2-Leg Bridle Slings

Rope			Rated Capacities, Tons (2,000 lb) 2-Leg Bridle Sling		
Dia. (Inches)	Constr.		Vert 30 deg Horz 60 deg	45 degree Angle	Vert 60 deg Horz 30 deg
1/4	7 x 7 x 7		0.87	0.71	0.50
3/8	7 x 7 x 7		1.9	1.5	1.1
1/2	7 x 7 x 7		3.2	2.6	1.8
5/8	7 x 7 x 7		4.8	3.9	2.8
3/4	7 x 7 x 7		6.6	5.4	3.8
5/8	7 x 7 x 19		5.0	4.1	2.9
3/4	7 x 7 x 19		7.0	5.7	4.1
7/8	7 x 7 x 19		9.3	7.6	5.4
1	7 x 7 x 19		12.0	9.7	6.9
1- 1/8	7 x 7 x 19		14.0	12.0	8.2
1- 1/4	7 x 7 x 19		17.0	14.0	9.9
3/4	7 x 6 x 19	IWRC	6.6	5.4	3.8
7/8	7 x 6 x 19	IWRC	8.7	7.1	5.0
1	7 x 6 x 19	IWRC	11.0	9.0	6.4
1- 1/8	7 x 6 x 19	IWRC	13.0	11.0	7.7
1- 1/4	7 x 6 x 19	IWRC	16.0	13.0	9.2
1- 5/16	7 x 6 x 19	IWRC	17.0	14.0	10.0
1- 3/8	7 x 6 x 19	IWRC	19.0	15.0	11.0
1- 1/2	7 x 6 x 19	IWRC	22.0	18.0	13.0

TABLE F-9: PART 2—3-Leg Bridle Slings

Rope		Rated Capacities, Tons (2,000 lb) 3-Leg Bridle Sling		
Dia. (Inches)	Constr.	Vert 30 deg Horz 60 deg	45 degree Angle	Vert 60 deg Horz 30 deg
1/4	7 x 7 x 7	1.3	1.1	0.75
3/8	7 x 7 x 7	2.8	2.3	1.6
1/2	7 x 7 x 7	4.8	3.9	2.8
5/8	7 x 7 x 7	7.2	5.9	4.2
3/4	7 x 7 x 7	9.9	8.1	5.7
5/8	7 x 7 x 19	7.5	6.1	4.3
3/4	7 x 7 x 19	10.0	8.6	6.1
7/8	7 x 7 x 19	14.0	11.0	8.1
1	7 x 7 x 19	18.0	14.0	10.0
1- 1/8	7 x 7 x 19	21.0	17.0	12.0
1- 1/4	7 x 7 x 19	26.0	21.0	15.0

TABLE F-9: PART 2—3-Leg Bridle Slings

Rope			Rated Capacities, Tons (2,000 lb) 3-Leg Bridle Sling		
Dia. (Inches)	Constr.		Vert 30 deg Horz 60 deg	45 degree Angle	Vert 60 deg Horz 30 deg
3/4	7 x 6 x 19	IWRC	9.9	8.0	5.7
7/8	7 x 6 x 19	IWRC	13.0	11.0	7.5
1	7 x 6 x 19	IWRC	17.0	13.0	9.6
1- 1/8	7 x 6 x 19	IWRC	20.0	16.0	11.0
1- 1/4	7 x 6 x 19	IWRC	24.0	20.0	14.0
1- 5/16	7 x 6 x 19	IWRC	26.0	21.0	15.0
1- 3/8	7 x 6 x 19	IWRC	28.0	23.0	16.0
1- 1/2	7 x 6 x 19	IWRC	33.0	27.0	19.0

[Order 74-26, § 296-155-335 (part), Table F-9 (codified as WAC 296-155-34909), filed 5/7/74, effective 6/6/74.]

WAC 296-155-34910 Table F-10.

TABLE F-10
RATED CAPACITIES FOR 2-LEG
AND 3-LEG BRIDLE SLINGS
8-PART AND 6-PART BRAIDED ROPE
6 x 7 AND 6 x 19 CONSTRUCTION
IMPROVED PLOW STEEL GRADE ROPE
7 x 7 CONSTRUCTION GALVANIZED
AIRCRAFT GRADE ROPE

TABLE F-10: PART 1—2-Leg Bridle Slings

Component Rope		Rated Capacities, Tons (2,000 lb) 2-Leg Bridle Slings					
Dia. (Inches)	Constr.	Vert 30 degree Horz 60 degree		45 degree Angle		Vert 60 degree Horz 30 degree	
		8-Part	6-Part	8-Part	6-Part	8-Part	6-Part
3/32	6 x 7	0.74	0.55	0.60	0.45	0.42	0.32
1/8	6 x 7	1.3	0.98	1.1	0.80	0.76	0.57
3/16	6 x 7	2.9	2.2	2.4	1.8	1.7	1.3
3/32	7 x 7	0.89	0.67	0.72	0.55	0.51	0.39
1/8	7 x 7	1.6	1.2	1.3	1.0	0.95	0.71
3/16	7 x 7	3.6	2.7	2.9	2.2	2.1	1.5
3/16	6 x 19	3.0	2.2	2.4	1.8	1.7	1.3
1/4	6 x 19	5.3	4.0	4.3	3.2	3.1	2.3
5/16	6 x 19	8.3	6.2	6.7	5.0	4.8	3.6
3/8	6 x 19	12.0	8.9	9.7	7.2	6.8	5.1
7/16	6 x 19	16.0	12.0	13.0	9.8	9.3	6.9
1/2	6 x 19	21.0	15.0	17.0	13.0	12.0	9.0
9/16	6 x 19	26.0	20.0	21.0	16.0	15.0	11.0
5/8	6 x 19	32.0	24.0	26.0	20.0	19.0	14.0
3/4	6 x 19	46.0	35.0	38.0	28.0	27.0	20.0
7/8	6 x 19	62.0	47.0	51.0	38.0	36.0	27.0
1	6 x 19	81.0	61.0	66.0	50.0	47.0	35.0

TABLE F-10: PART 2—3-Leg Bridle Slings

Component Rope		Rated Capacities, Tons (2,000 lb) 3-Leg Bridle Slings					
Dia. (Inches)	Constr.	Vert 30 degree Horz 60 degree		45 degree Angle		Vert 60 degree Horz 30 degree	
		8-Part	6-Part	8-Part	6-Part	8-Part	6-Part
3/32	6 x 7	1.1	0.83	0.90	0.68	0.64	0.48
1/8	6 x 7	2.0	1.5	1.6	1.2	1.1	0.85
3/16	6 x 7	4.4	3.3	3.6	2.7	2.5	1.9
3/32	7 x 7	1.3	1.0	1.1	0.82	0.77	0.58
1/8	7 x 7	2.5	1.8	2.0	1.5	1.4	1.1
3/16	7 x 7	5.4	4.0	4.4	3.3	3.1	2.3
3/16	6 x 19	4.5	3.4	3.7	2.8	2.6	1.9
1/4	6 x 19	8.0	6.0	6.5	4.9	4.6	3.4
5/16	6 x 19	12.0	9.3	10.0	7.6	7.1	5.4
3/8	6 x 19	18.0	13.0	14.0	11.0	10.0	7.7
7/16	6 x 19	24.0	18.0	20.0	15.0	14.0	10.0
1/2	6 x 19	31.0	23.0	25.0	19.0	18.0	13.0
9/16	6 x 19	39.0	29.0	32.0	24.0	23.0	17.0
5/8	6 x 19	48.0	36.0	40.0	30.0	28.0	21.0
3/4	6 x 19	69.0	52.0	56.0	42.0	40.0	30.0
7/8	6 x 19	94.0	70.0	76.0	57.0	54.0	40.0
1	6 x 19	122.0	91.0	99.0	74.0	70.0	53.0

[Order 74-26, § 296-155-335 (part), Table F-10 (codified as WAC 296-155-34910), filed 5/7/74, effective 6/6/74.]

WAC 296-155-34911 Table F-11.

TABLE F-11
RATED CAPACITIES FOR STRAND LAID
GROMMET - HAND TUCKED IMPROVED
PLOW STEEL GRADE ROPE

Rope Body		Rated Capacities, Tons (2,000 lb)		
Dia. (inches)	Constr.	Vertical	Choker	Vertical Basket*
1/4	7 x 19	0.85	0.64	1.7
5/16	7 x 19	1.3	1.0	2.6
3/8	7 x 19	1.9	1.4	3.8
7/16	7 x 19	2.6	1.9	5.2
1/2	7 x 19	3.3	2.5	6.7
9/16	7 x 19	4.2	3.1	8.4
5/8	7 x 19	5.2	3.9	10.00
3/4	7 x 19	7.4	5.6	15.0
7/8	7 x 19	10.0	7.5	20.0
1	7 x 19	13.0	9.7	26.0
1-1/8	7 x 19	16.0	12.0	32.0
1-1/4	7 x 37	18.0	14.0	37.0
1-3/8	7 x 37	22.0	16.0	44.0
1-1/2	7 x 37	26.0	19.0	52.0

* These values only apply when the D/d ratio is 5 or greater where:
D = Diameter of curvature around which rope is bent.
d = Diameter of rope body.

[Statutory Authority: RCW 49.17.040 and 49.17.050. 86-03-074 (Order 86-14), § 296-155-34911, filed 1/21/86; Order 74-26, § 296-155-335 (part), Table F-11 (codified as WAC 296-155-34911), filed 5/7/74, effective 6/6/74.]

WAC 296-155-34912 Table F-12.

TABLE F-12
RATED CAPACITIES FOR CABLE LAID GROMMET -
HAND TUCKED 7 x 6 x 7 AND 7 x 6 x 19
CONSTRUCTIONS IMPROVED PLOW
STEEL GRADE ROPE
7 x 7 x 7 CONSTRUCTION GALVANIZED
AIRCRAFT GRADE ROPE

Cable Body		Rated Capacities, Tons (2,000 lb)		
Dia. (inches)	Constr.	Vertical	Choker	Vertical Basket*
3/8	7 x 6 x 7	1.3	0.95	2.5
9/16	7 x 6 x 7	2.8	2.1	5.6
5/8	7 x 6 x 7	3.8	2.8	7.6
3/8	7 x 7 x 7	1.6	1.2	3.2
9/16	7 x 7 x 7	3.5	2.6	6.9
5/8	7 x 7 x 7	4.5	3.4	9.0
5/8	7 x 6 x 19	3.9	3.0	7.9
3/4	7 x 6 x 19	5.1	3.8	10.0
15/16	7 x 6 x 19	7.9	5.9	16.0
1-1/8	7 x 6 x 19	11.0	8.4	22.0
1-5/16	7 x 6 x 19	15.0	11.0	30.0
1-1/2	7 x 6 x 19	19.0	14.0	39.0
1-11/16	7 x 6 x 19	24.0	18.0	49.0
1-7/8	7 x 6 x 19	30.0	22.0	60.0
2-1/4	7 x 6 x 19	42.0	31.0	84.0
2-5/8	7 x 6 x 19	56.0	42.0	112.0

* These values only apply when the D/d ratio is 5 or greater where:
D = Diameter of curvature around which cable body is bent.
d = Diameter of cable body.

[Statutory Authority: RCW 49.17.040 and 49.17.050. 86-03-074 (Order 86-14), § 296-155-34912, filed 1/21/86; Order 74-26, § 296-155-335 (part), Table F-12 (codified as WAC 296-155-34912), filed 5/7/74, effective 6/6/74.]

WAC 296-155-34913 Table F-13.

TABLE F-13
RATED CAPACITIES FOR STRAND LAID
ENDLESS SLINGS-MECHANICAL JOINT
IMPROVED PLOW STEEL GRADE ROPE

ROPE BODY		RATED CAPACITIES, TONS (2,000 lb)		
Dia. (inches)	Constr.	Vertical	Choker	Vertical Basket*
1/4	6 x 19 IWRC	0.92	0.69	1.8
3/8	6 x 19 IWRC	2.0	1.5	4.1
1/2	6 x 19 IWRC	3.6	2.7	7.2
5/8	6 x 19 IWRC	5.6	4.2	11.0
3/4	6 x 19 IWRC	8.0	6.0	16.0
7/8	6 x 19 IWRC	11.0	8.1	21.0
1	6 x 19 IWRC	14.0	10.0	28.0
1 - 1/8	6 x 19 IWRC	18.0	13.0	35.0
1 - 1/4	6 x 37 IWRC	21.0	15.0	41.0
1 - 3/8	6 x 37 IWRC	25.0	19.0	50.0
1 - 1/2	6 x 37 IWRC	29.0	22.0	59.0

* These values only apply when the D/d ratio is 5 or greater where:
D = Diameter of curvature around which rope is bent.
d = Diameter of rope body.

[Statutory Authority: RCW 49.17.040 and 49.17.050. 86-03-074 (Order 86-14), § 296-155-34913, filed 1/21/86; Order 74-26, § 296-155-335 (part), Table F-13 (codified as WAC 296-155-34913), filed 5/7/74, effective 6/6/74.]

WAC 296-155-34914 Table F-14.

TABLE F-14
RATED CAPACITIES FOR CABLE LAID
ENDLESS SLINGS-MECHANICAL JOINT
7 x 7 x 7 AND 7 x 7 x 19 CONSTRUCTIONS
GALVANIZED AIRCRAFT GRADE ROPE
7 x 6 x 19 IWRC CONSTRUCTION IMPROVED
PLOW STEEL GRADE ROPE

CABLE BODY			RATED CAPACITIES, TONS (2,000 lb)		
Dia. (inches)	Constr.		Vertical	Choker	Vertical Basket*
1/4	7 x 7 x 7		0.83	0.62	1.6
3/8	7 x 7 x 7		1.8	1.3	3.5
1/2	7 x 7 x 7		3.0	2.3	6.1
5/8	7 x 7 x 7		4.5	3.4	9.1
3/4	7 x 7 x 7		6.3	4.7	12.0
5/8	7 x 7 x 19		4.7	3.5	9.5
3/4	7 x 7 x 19		6.7	5.0	13.0
7/8	7 x 7 x 19		8.9	6.6	18.0
1	7 x 7 x 19		11.0	8.5	22.0
1 - 1/8	7 x 7 x 19		14.0	10.0	28.0
1 - 1/4	7 x 7 x 19		17.0	12.0	33.0
3/4	7 x 6 x 19	IWRC	6.2	4.7	12.0
7/8	7 x 6 x 19	IWRC	8.3	6.2	16.0
1	7 x 6 x 19	IWRC	10.0	7.9	21.0
1 - 1/8	7 x 6 x 19	IWRC	13.0	9.7	26.0
1 - 1/4	7 x 6 x 19	IWRC	16.0	12.0	31.0
1 - 3/4	7 x 6 x 19	IWRC	18.0	14.0	37.0
1 - 1/2	7 x 6 x 19	IWRC	22.0	16.0	43.0

* These values only apply when the D/d value is 5 or greater where:
D = Diameter of curvature around which cable body is bent.
d = Diameter of cable body.

[Statutory Authority: RCW 49.17.040 and 49.17.050. 86-03-074 (Order 86-14), § 296-155-34914, filed 1/21/86; Order 74-26, § 296-155-335 (part), Table F-14 (codified as WAC 296-155-34914), filed 5/7/74, effective 6/6/74.]

WAC 296-155-34915 Table F-15.

TABLE F-15
MANILA ROPE SLINGS
TABLE F-15: PART 1—Eye and Eye Sling

ROPE Diameter Nominal in Inches	Nominal weight per 100 ft in Pounds	Minimum Breaking Strength in Pounds	RATED CAPACITY IN POUNDS (Safety Factor = 5) EYE AND EYE SLING BASKET HITCH Angle of Rope to Horizontal 90 deg	60 deg	45 deg	30 deg
			Angle of Rope to Vertical			
			Vertical Hitch	Choker Hitch	0 deg	30 deg	45 deg	60 deg
1/2	7.5	2,650	550	250	1,100	900	750	550
9/16	10.4	3,450	700	350	1,400	1,200	1,000	700
5/8	13.3	4,400	900	450	1,800	1,500	1,200	900
3/4	16.7	5,400	1,100	550	2,200	1,900	1,500	1,100
13/16	19.5	6,500	1,300	650	2,600	2,300	1,800	1,300
7/8	22.5	7,700	1,500	750	3,100	2,700	2,200	1,500
1	27.0	9,000	1,800	900	3,600	3,100	2,600	1,800
1 1/16	31.3	10,500	2,100	1,100	4,200	3,600	3,000	2,100
1 1/8	36.0	12,000	2,400	1,200	4,800	4,200	3,400	2,400
1 1/4	41.7	13,500	2,700	1,400	5,400	4,700	3,800	2,700
1 5/16	47.9	15,000	3,000	1,500	6,000	5,200	4,300	3,000
1 1/2	59.9	18,500	3,700	1,850	7,400	6,400	5,200	3,700
1 5/8	74.6	22,500	4,500	2,300	9,000	7,800	6,400	4,500
1 3/4	89.3	26,500	5,300	2,700	10,500	9,200	7,500	5,300
2	107.5	31,000	6,200	3,100	12,500	10,500	8,800	6,200
2 1/3	125.0	36,000	7,200	3,600	14,500	12,500	10,000	7,200
2 1/4	146.0	41,000	8,200	4,100	16,500	14,000	11,500	8,200
2 1/2	166.7	46,500	9,300	4,700	18,500	16,000	13,000	9,300
2 5/8	190.8	52,000	10,500	5,200	21,000	18,000	14,500	10,500

TABLE F-15: PART 2—Endless Sling

ROPE Diameter Nominal in Inches	Nominal weight per 100 ft in Pounds	Minimum Breaking Strength in Pounds	RATED CAPACITY IN POUNDS (Safety Factor = 5) ENDLESS SLING BASKET HITCH Angle of Rope to Horizontal 90 deg	60 deg	45 deg	30 deg
			Angle of Rope to Vertical			
			Vertical Hitch	Choker Hitch	0 deg	30 deg	45 deg	60 deg
1/2	7.5	2,650	950	500	1,900	1,700	1,400	950
9/16	10.4	3,450	1,200	600	2,500	2,200	1,800	1,200
5/8	13.3	4,400	1,600	800	3,200	2,700	2,200	1,600
3/4	16.7	5,400	2,000	950	3,900	3,400	2,800	2,000
1 3/16	19.5	6,500	2,300	1,200	4,700	4,100	3,300	2,300
7/8	22.5	7,700	2,800	1,400	5,600	4,800	3,900	2,800
1	27.0	9,000	3,200	1,600	6,500	5,600	4,600	3,200
1 1/16	31.3	10,500	3,800	1,900	7,600	6,600	5,400	3,800
1 1/8	36.0	12,000	4,300	2,200	8,600	7,500	6,100	4,300
1 1/4	41.7	13,500	4,900	2,400	9,700	8,400	6,900	4,900
1 5/16	47.9	15,000	5,400	2,700	11,000	9,400	7,700	5,400
1 1/2	59.9	18,500	6,700	3,300	13,500	11,500	9,400	6,700
1 5/8	74.6	22,500	8,100	4,100	16,000	14,000	11,500	8,000
1 3/4	89.3	26,500	9,500	4,800	19,000	16,500	13,500	9,500
2	107.5	31,000	11,000	5,600	22,500	19,500	16,000	11,000
2 1/3	125.0	36,000	13,000	6,500	26,000	22,500	18,500	13,000
2 1/4	146.0	41,000	15,000	7,400	29,500	25,500	21,000	15,000
2 1/2	166.7	46,500	16,500	8,400	33,500	29,000	23,500	16,500
2 5/8	190.8	52,000	18,500	9,500	37,500	32,500	26,500	18,500

[Order 74-26, § 296-155-335 (part), Table F-15 (codified as WAC 296-155-34915), filed 5/7/74, effective 6/6/74.]

WAC 296-155-34916 Table F-16.

TABLE F-16
NYLON ROPE SLINGS
TABLE F-16: PART 1—Eye and Eye Sling

ROPE Diameter Nominal in Inches	Nominal weight per 100 ft in Pounds	Minimum Breaking Strength in Pounds	RATED CAPACITY IN POUNDS (Safety Factor = 9) EYE AND EYE SLING BASKET HITCH Angle of Rope to Horizontal 90 deg	60 deg	45 deg	30 deg
			Angle of Rope to Vertical			
			Vertical Hitch	Choker Hitch	0 deg	30 deg	45 deg	60 deg
1/2	6.5	6,080	700	350	1,400	1,200	950	700
9/16	8.3	7,600	850	400	1,700	1,500	1,200	850
5/8	10.5	9,880	1,100	550	2,200	1,900	1,600	1,100
3/4	14.5	13,490	1,500	750	3,000	2,600	2,100	1,500
1 3/16	17.0	16,150	1,800	900	3,600	3,100	2,600	1,800
7/8	20.0	19,000	2,100	1,100	4,200	3,700	3,000	2,100
1	26.0	23,750	2,600	1,300	5,300	4,600	3,700	2,600
1 1/16	29.0	27,360	3,000	1,500	6,100	5,300	4,300	3,000
1 1/8	34.0	31,350	3,500	1,700	7,000	6,000	5,000	3,500
1 1/4	40.0	35,625	4,000	2,000	7,900	6,900	5,600	4,000
1 5/16	45.0	40,850	4,500	2,300	9,100	7,900	6,400	4,500
1 1/2	55.0	50,350	5,600	2,800	11,000	9,700	7,900	5,600
1 5/8	68.0	61,750	6,900	3,400	13,500	12,000	9,700	6,900
1 3/4	83.0	74,100	8,200	4,100	16,500	14,500	11,500	8,200
2	95.0	87,400	9,700	4,900	19,500	17,000	13,500	9,700
2 1/8	109.0	100,700	11,000	5,600	22,500	19,500	16,000	11,000
2 1/4	129.0	118,750	13,000	6,600	26,500	23,000	18,500	13,000
2 1/2	149.0	133,000	15,000	7,400	29,500	25,500	21,000	15,000
2 5/8	168.0	153,900	17,100	8,600	34,000	29,500	24,000	17,000

TABLE F-16: PART 2—Endless Sling

ROPE Diameter Nominal in Inches	Nominal weight per 100 ft in Pounds	Minimum Breaking Strength in Pounds	RATED CAPACITY IN POUNDS (Safety Factor = 9) ENDLESS SLING BASKET HITCH Angle of Rope to Horizontal 90 deg	60 deg	45 deg	30 deg
			Angle of Rope to Vertical			
			Vertical Hitch	Choker Hitch	0 deg	30 deg	45 deg	60 deg
1/2	6.5	6,080	1,200	600	2,400	2,100	1,700	1,200
9/16	8.3	7,600	1,500	750	3,000	2,600	2,200	1,500
5/8	10.5	9,880	2,000	1,000	4,000	3,400	2,800	2,000
3/4	14.5	13,490	2,700	1,400	5,400	4,700	3,800	2,700
1 3/16	17.0	16,150	3,200	1,600	6,400	5,600	4,600	3,200
7/8	20.0	19,000	3,800	1,900	7,600	6,600	5,400	3,800
1	26.0	23,750	4,800	2,400	9,500	8,200	6,700	4,800
11/16	29.0	27,360	5,500	2,700	11,000	9,500	7,700	5,500
1 1/8	34.0	31,350	6,300	3,100	12,500	11,000	8,900	6,300
1 1/4	40.0	35,625	7,100	3,600	14,500	12,500	10,000	7,100
1 5/16	45.0	40,850	8,200	4,100	16,500	14,000	12,000	8,200
1 1/2	55.0	50,350	10,000	5,000	20,000	17,500	14,000	10,000
1 5/8	68.0	61,750	12,500	6,200	24,500	21,500	17,500	12,500
1 3/4	83.0	74,100	15,000	7,400	29,500	27,500	21,000	15,000
2	95.0	87,400	17,500	8,700	35,000	30,500	24,500	17,500
2 1/8	109.0	100,700	20,000	10,000	40,500	35,000	28,500	20,000
2 1/4	129.0	118,750	24,000	12,000	47,500	41,000	33,500	24,000
2 1/2	149.0	133,000	26,500	13,500	53,000	46,000	37,500	26,500
2 5/8	168.0	153,900	31,000	15,500	61,500	53,500	43,500	31,000

[Order 74-26, § 296-155-335 (part), Table F-16 (codified as WAC 296-155-34916), filed 5/7/74, effective 6/6/74.]

WAC 296-155-34917 Table F-17.

TABLE F-17
POLYESTER ROPE SLINGS
TABLE F-17: PART 1—Eye and Eye Sling

ROPE Diameter Nominal in Inches	Nominal weight per 100 ft in Pounds	Minimum Breaking Strength in Pounds	RATED CAPACITY IN POUNDS (Safety Factor = 9) EYE AND EYE SLING					
					BASKET HITCH Angle of Rope to Horizontal			
					90 deg	60 deg	45 deg	30 deg
					Angle of Rope to Vertical			
			Vertical Hitch	Choker Hitch	0 deg	30 deg	45 deg	60 deg
1/2	8.0	6,080	700	350	1,400	1,200	950	700
9/16	10.2	7,600	850	400	1,700	1,500	1,200	850
5/8	13.0	9,500	1,100	550	2,100	1,800	1,500	1,100
3/4	17.5	11,875	1,300	650	2,600	2,300	1,900	1,300
1 3/16	21.0	14,725	1,600	800	3,300	2,800	2,300	1,600
7/8	25.0	17,100	1,900	950	3,800	3,300	2,700	1,900
1	30.5	20,900	2,300	1,200	4,600	4,000	3,300	2,300
1 1/16	34.5	24,225	2,700	1,300	5,400	4,700	3,800	2,700
1 1/8	40.0	28,025	3,100	1,600	6,200	5,400	4,400	3,100
1 1/4	46.3	31,540	3,500	1,800	7,000	6,100	5,000	3,500
1 5/16	52.5	35,625	4,000	2,000	7,900	6,900	5,600	4,000
1 1/2	66.8	44,460	4,900	2,500	9,900	8,600	7,000	4,900
1 5/8	82.0	54,150	6,000	3,000	12,000	10,400	8,500	6,000
1 3/4	98.0	64,410	7,200	3,600	14,500	12,500	10,000	7,200
2	118.0	76,000	8,400	4,200	17,000	14,500	12,000	8,400
2 1/8	135.0	87,400	9,700	4,900	19,500	17,000	13,500	9,700
2 1/4	157.0	101,650	11,500	5,700	22,500	19,500	16,000	11,500
2 1/2	181.0	115,900	13,000	6,400	26,000	22,500	18,000	13,000
2 5/8	205.0	130,150	14,500	7,200	29,000	25,000	20,500	14,500

TABLE F-17: PART 2—Endless Sling

ROPE Diameter Nominal in Inches	Nominal weight per 100 ft in Pounds	Minimum Breaking Strength in Pounds	RATED CAPACITY IN POUNDS (Safety Factor = 9) ENDLESS SLING					
					BASKET HITCH Angle of Rope to Horizontal			
					90 deg	60 deg	45 deg	30 deg
					Angle of Rope to Vertical			
			Vertical Hitch	Choker Hitch	0 deg	30 deg	45 deg	60 deg
1/2	8.0	6,080	1,200	600	2,400	2,100	1,700	1,200
9/16	10.2	7,600	1,500	750	3,000	2,600	2,200	1,500
5/8	13.0	9,500	1,900	950	3,800	3,300	2,700	1,900
3/4	17.5	11,875	2,400	1,200	4,800	4,100	3,400	2,400
1 3/16	21.0	14,725	2,900	1,500	5,900	5,100	4,200	2,900
7/8	25.0	17,100	3,400	1,700	6,800	5,900	4,800	3,400
1	30.5	20,900	4,200	2,100	8,400	7,200	5,900	4,200
1 1/16	34.5	24,225	4,800	2,400	9,700	8,400	6,900	4,800
1 1/8	40.0	28,025	5,600	2,800	11,000	9,700	7,900	5,600
1 1/4	46.3	31,540	6,300	3,200	12,500	11,000	8,900	6,300
1 5/16	52.5	35,625	7,100	3,600	14,500	12,500	10,000	7,100
1 1/2	66.8	44,460	8,900	4,400	18,000	15,500	12,500	8,900
1 5/8	82.0	54,150	11,000	5,400	21,500	19,000	15,500	11,000
1 3/4	98.0	64,410	13,000	6,400	26,000	22,500	18,000	13,000
2	118.0	76,000	15,000	7,600	30,500	26,500	21,500	15,000
2 1/8	135.0	87,400	17,500	8,700	35,000	30,500	24,500	17,500
2 1/4	157.0	101,650	20,500	10,000	40,500	35,000	29,000	20,500
2 1/2	181.0	115,900	23,000	11,500	46,500	40,000	33,000	23,000
2 5/8	205.0	130,150	26,000	13,000	52,000	45,000	37,000	26,000

[Order 74-26, § 296-155-335 (part), Table F-17 (codified as WAC 296-155-34917), filed 5/7/74, effective 6/6/74.]

WAC 296-155-34918 Table F-18.

TABLE F-18
POLYPROPYLENE ROPE SLINGS
TABLE F-18: PART 1—Eye and Eye Sling

ROPE Diameter Nominal in Inches	Nominal weight per 100 ft in Pounds	Minimum Breaking Strength in Pounds	RATED CAPACITY IN POUNDS (Safety Factor = 6) EYE AND EYE SLING					
					BASKET HITCH Angle of Rope to Horizontal			
					90 deg	60 deg	45 deg	30 deg
					Angle of Rope to Vertical			
			Vertical Hitch	Choker Hitch	0 deg	30 deg	45 deg	60 deg
1/2	4.7	3,990	650	350	1,300	1,200	950	65
9/16	6.1	4,845	800	400	1,600	1,400	1,100	800
5/8	7.5	5,890	1,000	500	2,000	1,700	1,400	1,000
3/4	10.7	8,075	1,300	700	2,700	2,300	1,900	1,300
13/16	12.7	9,405	1,600	800	3,100	2,700	2,200	1,600
7/8	15.0	10,925	1,800	900	3,600	3,200	2,600	1,800
1	18.0	13,300	2,200	1,100	4,400	3,800	3,100	2,200
1 1/16	20.4	15,200	2,500	1,300	5,100	4,400	3,600	2,500
1 1/8	23.7	17,385	2,900	1,500	5,800	5,000	4,100	2,900
1 1/4	27.0	19,950	3,300	1,700	6,700	5,800	4,700	3,300
1 5/16	30.5	22,325	3,700	1,900	7,400	6,400	5,300	3,700
1 1/2	38.5	28,215	4,700	2,400	9,400	8,100	6,700	4,700
1 5/8	47.5	34,200	5,700	2,900	11,500	9,900	8,100	5,700
1 3/4	57.0	40,850	6,800	3,400	13,500	12,000	9,600	6,800
2	69.0	49,400	8,200	4,100	16,500	14,500	11,500	8,200
2 1/8	80.0	57,950	9,700	4,800	19,500	16,500	13,500	9,700
2 1/4	92.0	65,550	11,000	5,500	22,000	19,000	15,500	11,000
2 1/2	107.0	76,000	12,500	6,300	25,500	22,000	18,000	12,500
2 5/8	120.0	85,500	14,500	7,100	28,500	24,500	20,000	14,500

TABLE F-18: PART 2—Endless Sling

ROPE Diameter Nominal in Inches	Nominal weight per 100 ft in Pounds	Minimum Breaking Strength in Pounds	RATED CAPACITY IN POUNDS (Safety Factor = 6) ENDLESS SLING					
					BASKET HITCH Angle of Rope to Horizontal			
					90 deg	60 deg	45 deg	30 deg
					Angle of Rope to Vertical			
			Vertical Hitch	Choker Hitch	0 deg	30 deg	45 deg	60 deg
1/2	4.7	3,990	1,200	600	2,400	2,100	1,700	1,200
9/16	6.1	4,845	1,500	750	2,900	2,500	2,100	1,500
5/8	7.5	5,890	1,800	900	3,500	3,100	2,500	1,800
3/4	10.7	8,075	2,400	1,200	4,900	4,200	3,400	2,400
1 3/16	12.7	9,405	2,800	1,400	5,600	4,900	4,000	2,800
7/8	15.0	10,925	3,300	1,600	6,600	5,700	4,600	3,300
1	18.0	13,300	4,000	2,000	8,000	6,900	5,600	4,000
1 1/16	20.4	15,200	4,600	2,300	9,100	7,900	6,500	4,600
1 1/8	23.7	17,385	5,200	2,600	10,500	9,000	7,400	5,200
1 1/4	27.0	19,950	6,000	3,000	12,000	10,500	8,500	6,000
1 5/16	30.5	22,325	6,700	3,400	13,500	11,500	9,500	6,700
1 1/2	38.5	28,215	8,500	4,200	17,000	14,500	12,000	8,500
1 5/8	47.5	34,200	10,500	5,100	20,500	18,000	14,500	10,500
1 3/4	57.0	40,850	12,500	6,100	24,500	21,000	17,500	12,500
2	69.0	49,400	15,000	7,400	29,500	25,500	21,000	15,000
2 1/8	80.0	57,950	17,500	8,700	35,000	30,100	24,500	17,500
2 1/4	92.0	65,550	19,500	9,900	39,500	34,000	28,000	19,500
2 1/2	107.0	76,000	23,000	11,500	45,500	39,500	32,500	23,000
2 5/8	120.0	85,500	25,500	13,000	51,500	44,500	36,500	25,500

[Order 74-26, § 296-155-335 (part), Table F-18 (codified as WAC 296-155-34918), filed 5/7/74, effective 6/6/74.]

WAC 296-155-34919 Table F-19.

TABLE F-19
SAFE WORKING LOADS FOR SHACKLES
(In tons of 2,000 pounds)

Material size (inches)	Pin diameter (inches)	Safe working load
1/2	5/8	1.4
5/8	3/4	2.2
3/4	7/8	3.2
7/8	1	4.3
1	1 1/8	5.6
1 1/8	1 1/4	6.7
1 1/4	1 3/8	8.2
1 3/8	1 1/2	10.0
1 1/2	1 15/8	11.9
1 3/4	2	16.2
2	2 1/4	21.2

[Order 74-26, § 296-155-335 (part), Table F-19 (codified as WAC 296-155-34919), filed 5/7/74, effective 6/6/74.]

WAC 296-155-34920 Table F-20.

TABLE F-20
NUMBER AND SPACING OF U-BOLT
WIRE ROPE CLIPS

Improved plow steel	Number of Clips Drop forged	Minimum spacing (inches)
3/8 and under	2	3
1/2	3	3
5/8	3	3
3/4	4	4 1/2
7/8	4	5 1/4
1	5	6
1 1/8	6	7
1 1/4	6	8
1 3/8	7	9
1 1/2	7	10

[Statutory Authority: Chapter 49.17 RCW. 94-15-096 (Order 94-07), § 296-155-34920, filed 7/20/94, effective 9/20/94. Statutory Authority: RCW 49.17.040 and 49.17.050. 86-03-074 (Order 86-14), § 296-155-34920, filed 1/21/86; Order 74-26, § 296-155-335 (part), Table F-20 (codified as WAC 296-155-34920), filed 5/7/74, effective 6/6/74.]

PART G
TOOLS—HAND AND POWER

WAC 296-155-350 General requirements. (1) Condition of tools. All hand and power tools and similar equipment, whether furnished by the employer or the employee, shall be maintained in a safe condition.

(2) Guarding.

(a) When power operated tools are designed to accommodate guards, they shall be equipped with such guards when in use.

(b) Belts, gears, shafts, pulleys, sprockets, spindles, drums, fly wheels, chains, or other reciprocating, rotating or moving parts of equipment shall be guarded if such parts are exposed to contact by employees or otherwise create a hazard. Guarding shall meet the requirements as set forth in American National Standards Institute, B15.1-1953 (R1958), Safety Code for Mechanical Power-Transmission Apparatus.

(3) Personal protective equipment. Employees using hand and power tools and exposed to the hazard of falling, flying, abrasive, and splashing objects, or exposed to harmful dusts, fumes, mists, vapors, or gases shall use the particular personal protective equipment necessary to protect them from the hazard. All personal protective equipment shall meet the requirements and be maintained according to Parts B and C of this chapter.

(4) Switches.

(a) Scope. This subsection does not apply to concrete vibrators, concrete breakers, powered tampers, jack hammers, rock drills, and similar hand operated power tools.

(b) All hand-held powered platen sanders, grinders with wheels 2-inch diameter or less, routers, planers, laminate trimmers, nibblers, shears, scroll saws, and jigsaws with blade shanks one-fourth of an inch wide or less may be equipped with only a positive "on-off" control.

(c) All hand-held powered drills, tappers, fastener drivers, horizontal, vertical, and angle grinders with wheels greater than 2 inches in diameter, disc sanders, belt sanders, reciprocating saws, saber saws, and other similar operating powered tools shall be equipped with a momentary contact "on-off" control and may have a lock-on control provided that turn-off can be accomplished by a single motion of the same finger or fingers that turn it on.

(d) All other hand-held powered tools, such as circular saws, chain saws, and percussion tools, shall be equipped with a constant pressure switch that will shut off the power when the pressure is released.

(e) Disconnect switches. All fixed power driven tools shall be provided with a disconnect switch that can either be locked or tagged in the off position.

(f) Self-feed. Automatic feeding devices shall be installed on machines whenever the nature of the work will permit. Feeder attachments shall have the feed rolls or other moving parts covered or guarded so as to protect the operator from hazardous points.

[Order 74-26, § 296-155-350, filed 5/7/74, effective 6/6/74.]

WAC 296-155-355 Hand tools. (1) Employers shall not issue or permit the use of unsafe hand tools.

(2) Wrenches, including adjustable, pipe, end, and socket wrenches shall not be used when jaws are sprung or worn to the point that slippage occurs.

(3) Nails shall not be cut with an axe.

(4) Impact tools, such as drift pins, wedges, and chisels, shall be kept free of mushroomed heads.

(5) The wooden handles of tools shall be kept free of splinters or cracks and shall be kept tight in the tool.

[Statutory Authority: RCW 49.17.040 and 49.17.050. 86-03-074 (Order 86-14), § 296-155-355, filed 1/21/86; Order 74-26, § 296-155-355, filed 5/7/74, effective 6/6/74.]

WAC 296-155-360 Power-operated hand tools. (1) Electric power-operated tools.

(a) Electric power operated tools shall either be of the approved double-insulated type or grounded in accordance with Part I of this chapter.

(b) The use of electric cords for hoisting or lowering tools shall not be permitted.

(2) Pneumatic power tools.

(a) Pneumatic power tools and hose sections shall be secured by threaded couplings, quick disconnect couplings or by 100 pound tensile strength safety chain or equivalent across each connection to prevent the tool or hose connections from becoming accidentally disconnected.

(b) Safety clips or retainers shall be securely installed and maintained on pneumatic impact (percussion) tools to prevent attachments from being accidentally expelled.

(c) All pneumatically driven nailers, staplers, and other similar equipment provided with automatic fastener feed, shall have a safety device on the muzzle to prevent the tool from ejecting fasteners, unless the muzzle is in contact with the work surface.

EXCEPTION: Pneumatic nailers or staplers utilizing "fine wire" brads or staples do not require a muzzle contact safety device, provided:

(1) The overall weight of the fastening device does not exceed the weight of standard 18 gauge wire, 1-1/2 inches long.

(2) The operator and any other person within 12 feet of the point of operation wear approved eye protection.

Note: The normal maximum diameter tolerance for manufacturing standard 18 gauge wire is .045 inches.

(d) Compressed air shall not be used at the nozzle for cleaning purposes except where reduced to less than 30 p.s.i. and then only with effective chip guarding and personal protective equipment which meets the requirements of Part C of this chapter.

Note: The above requirement does not apply to concrete form, mill scale and similar cleaning purposes. Concrete form, mill scale, and similar cleaning may be performed with air pressure exceeding 30 p.s.i. provided the nozzle and/or cleaning pipe is at least three feet long with a quick-closing (deadman) valve between the hose and the nozzle or pipe. The operator and all other employees within range of flying debris shall be protected by eye or face protection as specified in WAC 296-155-215.

(e) The manufacturer's safe operating pressure for hoses, pipes, valves, filters, and other fittings shall not be exceeded.

(f) The use of hoses for hoisting or lowering tools shall not be permitted.

(g) All hoses exceeding 1/2-inch inside diameter shall have a safety device at the source of supply or branch line to reduce pressure in case of hose failure.

(h) Airless spray guns of the type which atomize paints and fluids at high pressures (1,000 pounds or more per square inch) shall be equipped with automatic or visible manual safety devices which will prevent pulling of the trigger to prevent release of the paint or fluid until the safety device is manually released.

(i) In lieu of the above, a diffuser nut which will prevent high pressure, high velocity release, while the nozzle tip is removed, plus a nozzle tip guard which will prevent the tip from coming into contact with the operator, or other equivalent protection, shall be provided.

(j) Abrasive blast cleaning nozzles. The blast cleaning nozzles shall be equipped with an operating valve which must be held open manually. A support shall be provided on which the nozzle may be mounted when it is not in use.

(3) Fuel powered tools.

(a) All fuel powered tools shall be stopped while being refueled, serviced, or maintained, and fuel shall be transported, handled, and stored in accordance with Part D of this chapter.

(b) When fuel powered tools are used in enclosed spaces, the applicable requirements for concentrations of toxic gases and use of personal protective equipment as outlined in Parts B and C of this chapter shall apply.

(4) Hydraulic power tools.

(a) The fluid used in hydraulic powered tools shall be fire resistant fluid approved under schedule 30 of the Bureau of Mines, U.S. Department of the Interior, and shall retain its operating characteristics at the most extreme temperatures to which it will be exposed.

(b) The manufacturer's safe operating pressures for hoses, valves, pipes, filters, and other fittings shall not be exceeded.

[Statutory Authority: Chapter 49.17 RCW. 94-15-096 (Order 94-07), § 296-155-360, filed 7/20/94, effective 9/20/94. Statutory Authority: RCW 49.17.040 and 49.17.050. 86-03-074 (Order 86-14), § 296-155-360, filed 1/21/86; Order 76-29, § 296-155-360, filed 9/30/76; Order 76-6, § 296-155-360, filed 3/1/76; Order 74-26, § 296-155-360, filed 5/7/74, effective 6/6/74.]

WAC 296-155-363 Safety requirements for powder actuated fastening systems, in accordance with ANSI A10.3-1985, Safety Requirements for Powder Actuated Fastening Systems.

[Statutory Authority: Chapter 49.17 RCW. 91-11-070 (Order 91-01), § 296-155-363, filed 5/20/91, effective 6/20/91. Statutory Authority: RCW 49.17.040 and 49.17.050. 86-03-074 (Order 86-14), § 296-155-363, filed 1/21/86.]

WAC 296-155-36301 Scope. This standard provides safety requirements for a powder actuated fastening tool or machine which propels a stud, pin, fastener, or other object for the purpose of affixing it by penetration to another object.

This standard does not apply to devices designed for attaching objects to soft construction materials, such as wood, plaster, tar, dry wallboard, and the like, or to stud welding equipment.

[Statutory Authority: RCW 49.17.040 and 49.17.050. 86-03-074 (Order 86-14), § 296-155-36301, filed 1/21/86.]

WAC 296-155-36303 Purpose. The purpose of this standard is to provide reasonable safety for life, limb, and property, by establishing requirements for design, construction, operation, service, and storage of powder actuated fastening tools, fasteners and power loads.

[Statutory Authority: RCW 49.17.040 and 49.17.050. 86-03-074 (Order 86-14), § 296-155-36303, filed 1/21/86.]

WAC 296-155-36305 Definitions applicable to this section. (1) Angle control - a safety feature designed to prevent a tool from operating when tilted beyond a predetermined angle.

(2) Approved - meeting the requirements of this standard and acceptable to the department of labor and industries.

(3) Cased power load - a power load with the propellant contained in a closed case.

(4) Caseless power load - a power load with the propellant in solid form not requiring containment.

(5) Chamber (noun) - the location in the tool into which the power load is placed and in which it is actuated.

(6) Chamber (verb) - to fit the chamber according to manufacturer's specifications.

(7) Fasteners - any pins (unthreaded heads) or studs (threaded heads) driven by powder actuated tools.

(8) Fixture - a special shield that provides equivalent protection where the standard shield cannot be used.

(9) Head - that portion of a fastener that extends above the work surface after being properly driven.

(10) Misfire - a condition in which the power load fails to ignite after the tool has been operated.

(11) Powder actuated fastening system - a method comprising the use of a powder actuated tool, a power load, and a fastener.

(12) Powder actuated tool (also known as tool) - a tool that utilizes the expanding gases from a power load to drive a fastener.

(13) Power load - the energy source used in powder actuated tools.

(14) Qualified operator - a person who meets the requirements of WAC 296-155-36321 (1) and (2).

(15) Shield - a device, attached to the muzzle end of a tool, which is designed to confine flying particles.

(16) Spalled area - a damaged and nonuniform concrete or masonry surface.

(17) Test velocity - the measurement of fastener velocity performed in accordance with WAC 296-155-36307 (1)(m).

(18) Tools - tools can be divided into two types: Direct acting and indirect acting; and three classes: Low velocity, medium velocity, and high velocity.

(a) Direct acting tool - a tool in which the expanding gas of the power load acts directly on the fastener to be driven.

(b) Indirect acting tool - a tool in which the expanding gas of the power load acts on a captive piston, which in turn drives the fastener.

(c) Low-velocity tool - a tool whose test velocity has been measured ten times while utilizing the highest velocity combination of:

(i) The lightest commercially available fastener designed for that specific tool;

(ii) The strongest commercially available power load that will properly chamber in the tool;

(iii) The piston designed for that tool and appropriate for that fastener; that will produce an average test velocity from the ten tests not in excess of 100 meters per second (328 feet per second) with no single test having a velocity of over 108 m/s (354 ft/s).

(d) Medium-velocity tool - a tool whose test velocity has been measured ten times while utilizing the highest velocity combination of:

(i) The lightest commercially available fastener designed for the tool;

(ii) The strongest commercially available power load that will properly chamber in the tool;

(iii) The piston designed for that tool and appropriate for that fastener; that will produce an average test velocity from ten tests in excess of 100 m/s (328 ft/s) but not in excess of 150 m/s (492 ft/s) with no single test having a velocity of 160 m/s (525 ft/s).

(e) High-velocity tool - a tool whose test velocity has been measured ten times while utilizing the combination of:

(i) The lightest commercially available fastener designed for the tool;

(ii) The strongest commercially available power load which will properly chamber in the tool; that will produce an average velocity from the ten tests in excess of 150 m/s (492 ft/s).

[Statutory Authority: Chapter 49.17 RCW. 94-15-096 (Order 94-07), § 296-155-36305, filed 7/20/94, effective 9/20/94. Statutory Authority: RCW 49.17.040 and 49.17.050. 86-03-074 (Order 86-14), § 296-155-36305, filed 1/21/86.]

WAC 296-155-36307 Requirements. (1) General.

(a) The tool shall be designed to prevent inadvertent actuation.

(b) The tool shall be designed to prevent actuation when dropped in any attitude from a height of 3 meters (10 ft) onto a smooth, hard surface such as concrete or steel, if such actuation can propel a fastener or any part thereof in free flight.

(c) Actuation of the tool shall be dependent upon at least two separate and distinct operations by the operator, with at least one operation being separate from the operation of holding the tool against the work surface.

(d) The tool shall be designed not to be operable other than against a work surface with a force on the work surface equal to 22 newtons (5 lb) greater than the weight of the tool or a minimum impact energy of 4 joules (3 ft-lb).

(e) All tools shall be designed so that compatible protective shields or fixtures, designed, built, and supplied by the manufacturer of the tool, can be used (see WAC 296-155-36307 (2)(b), (3)(b), (4)(b) and 296-155-36313(8)).

(f) The tool shall be designed so that a determinable means of varying the power levels is available for selecting a power level adequate to perform the desired work (see WAC 296-155-36309(5)).

(g) The tool shall be designed so that all principal functional parts can be checked for foreign matter that may affect operation.

(h) The tool shall be designed so that all parts will be of adequate strength to resist maximum stresses imposed upon actuation when the tool is used in accordance with the manufacturer's instructions and is powered by any commercially available power load which will properly chamber in the tool.

(i) Each tool shall bear a legible permanent model designation, which shall serve as a means of identification. Each tool shall also bear a legible, permanent manufacturer's unique serial number.

(j) A lockable container shall be provided for each tool. The words "POWDER ACTUATED TOOL" shall appear in plain sight on the outside of the container. The following notice shall be attached on the inside cover of the container:

"WARNING - POWDER ACTUATED TOOL. TO BE USED ONLY BY A QUALIFIED OPERATOR AND KEPT UNDER LOCK AND KEY WHEN NOT IN USE."

(k) Each tool shall bear a durable warning label with the following statement, or the equivalent:

"WARNING - FOR USE ONLY BY QUALIFIED OPERATORS ACCORDING TO MANUFACTURER'S INSTRUCTION MANUAL."

(l) Each tool shall be supplied with the following:

(i) Operator's instruction and service manual.

(ii) Power load chart.

(iii) Tool inspection record.

(iv) Service tools and accessories.

(m) In determining tool test velocities, the velocity of the fastener shall be measured in free flight at a distance of 2 meters (6-1/2 ft) from the muzzle end of the tool, using accepted ballistic test methods.

(2) Design requirements - low-velocity class.

(a) Low-velocity tools, indirect-acting (piston) type, as defined in WAC 296-155-36305, shall meet the requirements of WAC 296-155-36307(1).

(b) A shield shall be supplied with each tool.

(3) Design requirements - medium-velocity class.

(a) Medium-velocity tools, indirect-acting (piston) type, as defined in WAC 296-155-36305, shall meet the requirements of WAC 296-155-36307(1).

(b) The tool shall have a shield at least 63 mm (2-1/2 in) in diameter mounted perpendicular to, and concentric with, the muzzle end, when it is indexed to the center position. A special shield or fixture may be used when it provides equivalent protection.

(c) The tool shall be designed so that it cannot be actuated unless it is equipped with a shield or fixture.

(d) The tool shall be designed with angle control so that it will not actuate when equipped with the standard shield indexed to the center position if the bearing surface of the shield is tilted more than 12 degrees from a flat surface.

(4) Design requirements - high-velocity class.

(a) High-velocity tools, direct-acting or indirect-acting type, as defined in WAC 296-155-36305, shall meet the requirements of WAC 296-155-36307(1).

(b) The tool shall have a shield at least 88 mm (3-1/2 in) in diameter mounted perpendicular to, and concentric with, the muzzle end, when it is indexed to the center position. A special shield or fixture may be used when it provides equivalent protection.

(c) The tool shall be designed so that it cannot be actuated unless it is equipped with a shield or fixture.

(d) The tool shall be designed with angle control so that it will not actuate when equipped with the standard shield indexed to the center position, if the bearing surface of the shield is tilted more than eight degrees from a flat surface.

[Statutory Authority: RCW 49.17.040 and 49.17.050. 86-03-074 (Order 86-14), § 296-155-36307, filed 1/21/86.]

WAC 296-155-36309 Power loads. (1) Identification of cased power loads. Cased power loads shall be coded to identify power load levels by case color and power load color as specified in Table G-1.

(2) Identification of caseless power loads. Caseless power loads shall be coded to identify power load levels by power load color as specified in Table G-1 and by configuration.

(3) Power load use limitation. No power load (cased or caseless) shall be used if it will properly chamber in any existing commercially available tool and will cause a fastener to have a test velocity in excess of the maximum test velocities specified for the said tool.

(4) Identification of power load packages. Power load packages shall provide a visual number-color indication of the power level of the power load as specified in Table G-1.

TABLE G-1
Power Load Identification

Power Level	Color Identification		Nominal velocity	
	Case Color	Load Color	Meters per Second (± 13.5)	Feet per Second (± 45)
1	Brass	Gray	91	300
2	Brass	Brown	119	390
3	Brass	Green	146	480
4	Brass	Yellow	174	570
5	Brass	Red	201	660
6	Brass	Purple	229	750
7	Nickel	Gray	256	840
8	Nickel	Brown	283	930
9	Nickel	Green	311	1020
10	Nickel	Yellow	338	1110
11	Nickel	Red	366	1200
12	Nickel	Purple	393	1290

Note: The nominal velocity applies to a 9.53 mm (3/8-in) diameter 22.7-gram (350-grain) ballistic slug fired in a test device and has no reference to actual fastener velocity developed in any specific tool.

(5) Optional power load variation. Where means other than power loads of varying power levels are to be used to control penetration, such means shall provide an equivalent power level variation.

[Statutory Authority: RCW 49.17.040 and 49.17.050. 86-03-074 (Order 86-14), § 296-155-36309, filed 1/21/86.]

WAC 296-155-36311 Fasteners. Fasteners for use in powder actuated tools shall be designed and manufactured to function compatibly with these tools and, when used in masonry, concrete, or steel, to effect properly the application for which they are recommended.

[Statutory Authority: RCW 49.17.040 and 49.17.050. 86-03-074 (Order 86-14), § 296-155-36311, filed 1/21/86.]

WAC 296-155-36313 Operation. (1) Acceptable tools. Only tools meeting the requirements of this standard shall be used.

(2) Qualified operators. Only qualified operators shall operate tools.

(3) Use lowest velocity. The lowest velocity class of tool that will properly set the fastener shall be used.

(4) Operating limitations. Tools shall be operated in strict accordance with the manufacture's instructions.

(5) Personal protection. Eye or face protection, or both, shall be worn by operators, assistants, and adjacent personnel when tool is in use. Hearing protection shall be used when making fastenings in confined areas.

(6) Daily inspections. Each day, prior to use, the operator shall inspect the tool to determine that it is in proper working condition in accordance with the testing methods recommended by the manufacture of the tool.

(7) Defective tools. Any tool found not to be in proper working condition shall be immediately removed from service and tagged "DEFECTIVE"; it shall not be used until it has been properly repaired in accordance with the manufacture's instructions.

(8) Proper accessories. The proper shield, fixture, adapter, or accessory, suited for the application, as recommended and supplied by the manufacture, shall be used.

(9) Proper loads and fasteners. Only those types of fasteners and power loads recommended by the tool manufacture for a particular tool, or those providing the same level of safety and performance, shall be used.

(10) Questionable material. Before fastening into any questionable material, the operator shall determine its suitability by using a fastener as a center punch. If the fastener point does not easily penetrate, is not blunted, and does not fracture the material, initial test fastenings shall then be made in accordance with the tool manufacture's recommendations. (See WAC 296-155-36315(3).)

(11) Tool safety. No tool shall be loaded unless it is being prepared for immediate use. If the work is interrupted after loading, the tool shall be unloaded at once.

(12) Powder actuated magazine or clip-fed tools are not considered loaded unless a power load is actually in the ram (firing chamber), even though the magazine or clip is inserted in the tool. If work is interrupted, the firing chamber shall be cleared and the magazine or clip removed.

(13) Pointing tools. Tools shall not be loaded until just prior to the intended firing time. Neither loaded nor empty tools are to be pointed at any person; hands shall be kept clear of the open barrel end.

(14) Tool perpendicular to work. The tool shall always be held perpendicular to the work surface when fastening into any material, except for specific applications recommended by the tool manufacture.

(15) Misfires. In the event of a misfire, the operator shall hold the tool firmly against the work surface for a period of thirty seconds and then follow the explicit instructions set forth in the manufacture's instructions.

(16) Different power levels. Power loads of different power levels and types shall be kept in separate compartments or containers.

(17) Signs. A sign, at least 20 x 25 cm (8 x 10 in), using boldface type no less than 2.5 cm (1 in) in height, shall be posted in plain sight on all construction projects where tools are used. The sign shall bear wording similar to the following: "POWDER ACTUATED TOOL IN USE."

[Statutory Authority: Chapter 49.17 RCW. 91-11-070 (Order 91-01), § 296-155-36313, filed 5/20/91, effective 6/20/91; 89-11-035 (Order 89-03), § 296-155-36313, filed 5/15/89, effective 6/30/89. Statutory Authority: RCW 49.17.040 and 49.17.050. 86-03-074 (Order 86-14), § 296-155-36313, filed 1/21/86.]

WAC 296-155-36315 Limitations of use. (1) Explosive and flammable atmospheres. The tool shall not be used in an explosive or flammable atmosphere.

(2) Unattended tools prohibited. A tool shall never be left unattended in a place where it would be available to unauthorized persons.

(3) Fasteners in hard, brittle areas. Fasteners shall not be driven into very hard or brittle materials including, but not limited to, cast iron, glazed tile, hardened steel, glass block, natural rock, hollow tile, or most brick. (See WAC 296-155-36313(10).)

(4) Fasteners in soft materials. Fasteners shall not be driven into easily penetrated or thin materials, or materials of questionable resistance, unless backed by a material that will prevent the fastener from passing completely through the other side.

(5) Fasteners in steel. Fasteners shall not be driven closer than 13 mm (1/2 in) from the edge of steel except for specific applications recommended by the tool manufacturer.

(6) Fasteners in masonry. Fasteners shall not be driven closer than 7.5 cm (3 in) from the unsupported edge of masonry materials except for specific applications recommended by the tool manufacturer.

(7) Fasteners in concrete. Fasteners shall not be driven into concrete unless material thickness is at least three times the fastener shank penetration.

(8) Fasteners in spalls. Fasteners shall not be driven into any spalled area.

(9) Fasteners in existing holes. Fasteners shall not be driven through existing holes unless a specific guide means, as recommended and supplied by the tool manufacturer, is used to ensure positive alignment.

[Statutory Authority: RCW 49.17.040 and 49.17.050. 86-03-074 (Order 86-14), § 296-155-36315, filed 1/21/86.]

WAC 296-155-36317 Maintenance and storage. (1) Use of tools. The tool shall be serviced and inspected for worn or damaged parts at regular intervals as recommended by the tool manufacturer. Prior to the tool being put back into use, all worn or damaged parts shall be replaced by a qualified person using only parts supplied by the tool manufacturer. A record of this inspection shall be noted and dated on the tool inspection record.

(2) Instruction manuals. Instruction manuals, maintenance tools, and accessories supplied with the tool shall be stored in the tool container when not in use.

(3) Security. Powder actuated tools and power loads shall be locked in a container and stored in a safe place when not in use and shall be accessible only to authorized personnel.

[Statutory Authority: RCW 49.17.040 and 49.17.050. 86-03-074 (Order 86-14), § 296-155-36317, filed 1/21/86.]

WAC 296-155-36319 Authorized instructor. (1) Operator qualifications. Only persons trained and authorized by the tool manufacturer or by an authorized representative of the tool manufacturer shall be qualified to instruct and qualify operators for the manufacturer's powder actuated tools.

(2) Instructor qualifications. All authorized instructors shall have read and be familiar with this standard, and shall be capable of:

(a) Disassembling, servicing, and reassembling the tool.

(b) Recognizing any worn or damaged parts or defective operation.

(c) Recognizing and clearly identifying the colors used to identify power load levels.

(d) Using the tool correctly within the limitations of its use.

(e) Training and testing operators prior to issuing a qualified operator's card.

(3) Instructor's card. All authorized instructors shall have in their possession a valid authorized instructor's card issued and signed by an authorized representative of the manufacturer. The card shall be wallet size of approximately 6 x 9 cm (2-1/2 x 3-1/2 in), and the face of the card shall bear text similar to that shown in Figure G-1.

(4) List of instructors. A list of all instructors authorized by the manufacturer to instruct and qualify operators shall be maintained by the tool manufacturer and be made available to the department of labor and industries.

(5) Revocation of instructor card. Instructor's card may be revoked by the authorizing agent or the department of labor and industries, if the instructor is known to have issued a qualified operator's card in violation of any regulation contained in this standard. When an instructor is no longer authorized to issue qualified operator's cards, cards shall be surrendered to the authorizing agent or the department of labor and industries.

AUTHORIZED INSTRUCTOR

. . . . . Powder Actuated Tools Date. . . .
(MAKE)
Card No. . . . . Social Security No. . . . . .
This certifies that . . . . . .
(NAME OF INSTRUCTOR)
has received the prescribed training in the operation and maintenance of powder actuated tools manufactured by
. . . . . and is qualified
(NAME OF MANUFACTURER)
to train and certify operators of . . . . . .
(MAKE)
powder actuated tools.
Model(s) . . . . . .
Authorized by . . . . . .
I have received instruction by the manufacturer's authorized representative in the training of operators of the above tools and agree to conform to all rules and regulations governing the instruction of tool operators.
Date of Birth . . . . . .
. . . . . .
(SIGNATURE)

Figure G-1
Sample of Authorized Instructor's Card

[Statutory Authority: Chapter 49.17 RCW. 94-15-096 (Order 94-07), § 296-155-36319, filed 7/20/94, effective 9/20/94. Statutory Authority: RCW 49.17.040 and 49.17.050. 86-03-074 (Order 86-14), § 296-155-36319, filed 1/21/86.]

WAC 296-155-36321 Qualified operator. (1) Operator qualifications. The operator shall be trained by an authorized instructor to be familiar with the provisions of this standard and the instructions provided by the manufacturer for operation and maintenance. The operator shall also be capable of:

(a) Reading and understanding the manufacturer's instruction manual.

(b) Cleaning the tool correctly.

(c) Recognizing any worn or damaged parts or defective operation.

(d) Recognizing the number-color code system used in this standard to identify power load levels. In the event the operator is unable to distinguish the colors used, the operator shall be given special instruction which will enable the operator to avoid error.

(e) Using a tool correctly within the limitations of its use and demonstrate competence by operating the tool in the presence of the instructor.

(2) Operator examination. After training, the operator shall substantiate competency by completing satisfactorily a written examination provided by the manufacturer of the tool.

(a) The operator's written examination shall consist of questions to establish the operator's competence with respect to:

(i) The requirements of this standard;

(ii) The powder actuated fastening system; and

(iii) The specific details of operation and maintenance of the tool(s) involved.

(b) The examination shall provide a statement, attested to by the instructor, that the applicant can (or cannot) readily distinguish the colors used to identify power load levels (see WAC 296-155-36309).

(3) Operator's card. Each applicant who meets the requirements as set forth in subsections (1) and (2) of this section shall receive a qualified operator's card, issued and signed by both the instructor and applicant. While using the tool, the operator shall carry this card.

(4) Card features. The qualified operator's card supplied by the manufacturer shall be wallet size of approximately 6 x 9 cm (2-1/2 x 3-1/2 in), and the face of the card shall bear text similar to that shown in Figure G-2.

(5) Revocation notation. There shall be printed on the card a notation reading:

"Revocation of card - Failure to comply with any of the rules and regulations for safe operation of powder actuated fastening tools shall be cause for the immediate revocation of this card."

QUALIFIED OPERATOR

. . . . . Powder Actuated Tools Date . . . .
(MAKE)
Card No. . . . . Social Security No. . . . . .
This certifies that . . . . . .
(NAME OF OPERATOR)
has received the prescribed training in the operation of powder actuated tools manufactured by
. . . . . .
(NAME OF MANUFACTURER)
Model(s) . . . . . .
Trained and issued by
. . . . . .
(SIGNATURE OF AUTHORIZED INSTRUCTOR)
I have received instruction in the safe operation and maintenance of powder actuated fastening tools of the makes and models specified and agree to conform to all rules and regulations governing that use
Date of Birth . . . . . .
. . . . . .
(SIGNATURE)

Figure G-2
Sample of Qualified Operation's Card

[Statutory Authority: Chapter 49.17 RCW. 94-15-096 (Order 94-07), § 296-155-36321, filed 7/20/94, effective 9/20/94. Statutory Authority: RCW 49.17.040 and 49.17.050. 86-03-074 (Order 86-14), § 296-155-36321, filed 1/21/86.]

WAC 296-155-365 Abrasive wheels and tools. (1) Power. All grinding machines shall be supplied with sufficient power to maintain the spindle speed at safe levels under all conditions of normal operation.

(2) Guarding.

(a) Grinding machines shall be equipped with safety guards in conformance with the requirements of American National Standards Institute, B7.1-1978, Safety Code for the Use, Care and Protection of Abrasive Wheels.

(b) Guard design. The safety guard shall cover the spindle end, nut, and flange projections. The safety guard shall be mounted so as to maintain proper alignment with the wheel,

and the strength of the fastenings shall exceed the strength of the guard, except:

(i) Safety guards on all operations where the work provides a suitable measure of protection to the operator, may be so constructed that the spindle end, nut, and outer flange are exposed; and where the nature of the work is such as to entirely cover the side of the wheel, the side covers of the guard may be omitted; and

(ii) The spindle end, nut, and outer flange may be exposed on machines designed as portable saws.

(3) Use of abrasive wheels.

(a) Floor stand and bench mounted abrasive wheels, used for external grinding, shall be provided with safety guards (protection hoods). The maximum angular exposure of the grinding wheel periphery and sides shall be not more than 90°, except that when work requires contact with the wheel below the horizontal plane of the spindle, the angular exposure shall not exceed 125°. In either case, the exposure shall begin not more than 65° above the horizontal plane of the spindle. Safety guards shall be strong enough to withstand the effect of a bursting wheel.

(b) Floor and bench-mounted grinders shall be provided with work rests which are rigidly supported and readily adjustable. Such work rests shall be adjusted to a distance not to exceed one-eighth inch from the surface of the wheel. The work rest may be omitted when contacts of the work piece with the grinding surface below the horizontal plane of the spindle are necessary and unavoidable, or where the size or shape of the work piece precludes use of the work rest.

(c) Cup type wheels used for external grinding shall be protected by either a revolving cup guard or a band type guard in accordance with the provisions of the American National Standards Institute, B7.1-1978, Safety Requirements for the Use, Care, and Protection of Abrasive Wheels. Abrasive wheels shall only be used on machines provided with safety guards, except the following:

(i) Wheels used for internal work while within the work being ground.

(ii) Mounted wheels, 2 inches and smaller in diameter used in portable operations.

(iii) Types 16, 17, 18, 18R and 19 cones and plugs, and threaded hole pot balls where the work offers protection or where the size does not exceed 3 inches in diameter by 5 inches in length.

(iv) Metal centered diamond lapidary wheels either notched, segmented or continuous rim used with a coolant deflector, when operated at speeds up to 3500 surface feet per minute (S.F.P.M.).

(v) Type 1 wheels not larger than 2 inches in diameter and not more than 1/2 inch thick, operating at peripheral speeds less than 1800 SFPM when mounted on mandrels driven by portable drills.

(vi) Type 1 reinforced wheels not more than 3 inches in diameter and 1/4 inch in thickness, operating at peripheral speeds not exceeding 9500 SFPM, provided that safety glasses and face shield are worn.

(vii) Valve seat grinding wheels.

(d) Portable abrasive wheels used for internal grinding shall be provided with safety flanges (protection flanges) meeting the requirements of subdivision (f) of this subsection, except as follows:

(i) When wheels 2 inches or less in diameter which are securely mounted on the end of a steel mandrel are used;

(ii) If the wheel is entirely within the work being ground while in use.

(e) When safety guards are required, they shall be so mounted as to maintain proper alignment with the wheel, and the guard and its fastenings shall be of sufficient strength to retain fragments of the wheel in case of accidental breakage. The maximum angular exposure of the grinding wheel periphery and sides shall not exceed 180°.

(f) When safety flanges are required, they shall be used only with wheels designed to fit the flanges. Only safety flanges, of a type and design and properly assembled so as to ensure that the pieces of the wheel will be retained in case of accidental breakage, shall be used.

(g) All abrasive wheels shall be closely inspected and ring-tested before mounting to ensure that they are free from cracks or defects.

(h) Grinding wheels shall fit freely on the spindle and shall not be forced on. The spindle nut shall be tightened only enough to hold the wheel in place.

(i) All employees using abrasive wheels shall be protected by eye protection equipment in accordance with the requirements of Part C of this chapter, except when adequate eye protection is afforded by eye shields which are permanently attached to the bench or floor stand.

(4) Other requirements. All abrasive wheels and tools used by employees shall meet other applicable requirements of American National Standards Institute, B7.1-1978, Safety Code for the Use, Care and Protection of Abrasive Wheels.

[Statutory Authority: Chapter 49.17 RCW. 94-15-096 (Order 94-07), § 296-155-365, filed 7/20/94, effective 9/20/94. Statutory Authority: RCW 49.17.040 and 49.17.050. 86-03-074 (Order 86-14), § 296-155-365, filed 1/21/86; Order 74-26, § 296-155-365, filed 5/7/74, effective 6/6/74.]

WAC 296-155-367 Masonry saws. (1) Guarding.

(a) Masonry saws shall be guarded by semicircular enclosures over the blade.

(b) A method for retaining blade fragments shall be incorporated into the design of the semicircular enclosure.

(2) Safety latch. A safety latch shall be installed on notched saws to prevent the motor and cutting head assembly from lifting out of the notches.

(3) Blade speed. Blade speed shall be maintained in accordance with the manufacturer's specifications.

(4) Exhaust and eye protection.

(a) All table mounted masonry saws shall be equipped with a mechanical means of exhausting dust into a covered receptacle or be provided with water on the saw blade for dust control. The operator and any nearby worker shall wear appropriate eye protection in accordance with WAC 296-155-215.

(b) All portable hand-held masonry saw operators shall wear appropriate eye and respiratory protection in accordance with WAC 296-155-215 and chapter 296-62 WAC, Part E.

(5) Grounding. The motor frames of all stationary saws shall be grounded through conduit, water pipe, or a driven

ground. Portable saws shall be grounded through three-pole cords attached to grounded electrical systems.

(6) Inspection. Masonry saws shall be inspected at regular intervals and maintained in safe operating condition.

[Statutory Authority: RCW 49.17.010, [49.17].040 and [49.17].050. 99-10-071, § 296-155-367, filed 5/4/99, effective 9/1/99. Statutory Authority: Chapter 49.17 RCW. 90-17-051 (Order 90-10), § 296-155-367, filed 8/13/90, effective 9/24/90. Statutory Authority: RCW 49.17.040 and 49.17.050. 86-03-074 (Order 86-14), § 296-155-367, filed 1/21/86.]

WAC 296-155-370 Woodworking tools. (1) Speeds. No saw shall be operated in excess of the manufacturers recommended speed.

(2) Guarding. All portable, hand held power-driven circular saws shall be equipped with guards above and below the base plate or shoe. The upper guard shall cover the saw to the depth of the teeth, except for the minimum arc required to permit the base to be tilted for bevel cuts. The lower guard shall cover the saw to the depth of the teeth, except for the minimum arc required to allow proper retraction and contact with the work. When the tool is withdrawn from the work, the lower guard shall automatically and instantly return to the covering position.

(3) Hand-fed table saws.

(a) Each circular hand-fed table saw shall be provided with a hood-type guard that will cover the blade at all times when the blade is not in use. This may be accomplished by the use of a guard that will automatically adjust to the thickness of the material being cut, or by a fixed or manually adjusted guard. If a fixed or manually adjusted guard is used, the space between the bottom of the guard and the material being cut shall not exceed 3/8 inch if 1-1/2 inches or more from the blade, and 1/4 inch if closer than 1-1/2 inches.

(b) When the blade is in use, the hood-type guard shall enclose that portion of the blade above the material.

(c) Hood-type guards shall be so designed and constructed as to resist blows and strains incidental to reasonable operation, adjusting, and handling, in order to protect the operator from flying splinters and broken saw teeth.

(d) The hood shall be so mounted as to ensure that its operation will be positive, reliable, and in alignment with the saw. The mounting shall be adequate to resist any reasonable side thrust or other force that would disrupt alignment.

(e) Where a hood-type guard cannot be used because of unusual shapes or cuts, a jig or fixture that will provide equal safety for the operator shall be used. On the completion of such operations, the guard shall be immediately replaced.

(f) A push stick shall be used on short or narrow stock when there is a possibility of the hand contacting the cutting tool.

(g) Each hand-fed circular ripsaw shall be equipped with a spreader to minimize the possibility of material squeezing the saw or of material kickbacks. The spreader shall be made of tempered steel, or its equivalent, and shall be slightly thinner than the saw kerf. It shall be of sufficient width to provide adequate stiffness or rigidity to resist any reasonable side thrust or blow tending to bend or throw it out of position. The spreader shall be attached so that it will remain in true alignment with the blade, even when either the saw or table is tilted, and should be placed so that there is not more than 1/2-inch space between the spreader and the back of the blade when the recommended saw blade is in its maximum "up" position. If a blade smaller than the maximum permissible size is used, the spreader shall be moved to within 1/2 inch of the blade. The provision of a spreader in connection with grooving, dadoing, or rabbeting is not required. On the completion of such operations, the spreader shall be immediately replaced.

(h) Each hand-fed circular ripsaw shall be provided with antikickback devices so located as to oppose the thrust or tendency of the saw blade to pick up the material or throw it back toward the operator. These devices shall be designed to provide holding power for all the thicknesses of material being cut.

(4) Radial saws.

(a) Hoods and guards. Each saw shall be provided with a device that will completely enclose the upper portion of the blade down to a point that includes the end of the saw arbor. The upper hood shall be so constructed as to protect the operator from flying splinters and broken saw teeth, and to deflect sawdust away from the operator. The sides of the lower exposed portion of the saw blade shall be guarded from the tips of the blade teeth inward radially with no greater than 3/8-inch gullet exposure. The device shall automatically adjust itself to the thickness of the stock and remain in contact with the stock being cut for the 90° blade positions (0° bevel) throughout the full working range of miter position. A permanent label not less than 1-1/2 inches X 3/4 inch shall be affixed to the guard visible from the normal operating position, reading as follows:

WARNING: TO AVOID INJURY, SHUT OFF POWER BEFORE CLEARING A JAMMED LOWER GUARD

Such a label shall be colored standard danger red or orange in accordance with American National Standard Safety Color Code for Marking Physical Hazards, Z53.1-1979.

(b) Spreaders. When radial saws are used for ripping, a spreader shall be provided and shall be aligned with the saw blade.

(c) Antikickback devices. Antikickback devices located on both sides of the saw blade on the outfeed side, so as to oppose the thrust or tendency of the blade to pick up the material or to throw it back toward the operator, shall be used on each radial saw used for ripping. These devices shall be designed to provide adequate holding power for all the thicknesses of material being cut.

(d) Adjustable stops and return devices. An adjustable stop shall be provided to prevent the forward travel of the blade beyond the position necessary to complete the cut. A limit chain or other equally effective device shall be provided to prevent the saw blade from sliding beyond the edge of the table; or the table shall be extended to eliminate over-run.

(e) On any manually operated saw, installation shall be such that the front of the machine is slightly higher than the rear, or some other means shall be provided so that the cutting head will not roll or move out on the arm away from the column as a result of gravity or vibration. A permanent label not less than 1-1/2 inches X 3/4 inch shall be affixed to the cutting head visible from the normal crosscut operating position, reading as follows:

WARNING: TO AVOID INJURY, RETURN CARRIAGE TO THE FULL REAR POSITION AFTER EACH CROSSCUT TYPE OF OPERATION

Such a label shall be colored standard caution yellow in accordance with American National Standard Z53.1-1979.

(f) Direction of feed. Ripping and ploughing shall be against the direction in which the saw blade turns. The direction of the saw blade rotation shall be conspicuously marked on the hoods. In addition, a permanent label not less than 1-1/2 inches X 3/4 inch shall be affixed to the end of the guard at which the blade teeth exit the upper guard during operation. The label shall be at approximately the level of the arbor and shall read as follows:

DANGER: TO AVOID INJURY, DO NOT FEED MATERIAL INTO CUTTING TOOL FROM THIS END

Such a label shall be colored standard red or orange in accordance with American National Standard, Z53.1-1979.

(5) All woodworking tools and machinery shall meet any other applicable requirements of American National Standards Institute, 01.1-1971, Safety Code for Woodworking Machinery.

(6) The control switch on all stationary radial arm saws shall be placed at the front of the saw or table and shall be properly recessed or hooded to prevent accidental contact.

(a) A firm level working area shall be provided at the front of all stationary radial arm saws. The area shall be kept free of all stumbling hazards.

(b) A push stick or similar device shall be used for pushing short material through power saws.

(7) Circular power miter saws. The requirements of subsection (4)(a) of this section applies to guarding circular power miter saws.

(8) Personal protective equipment. All personal protective equipment required for use shall conform to the requirements of Part C of this chapter.

[Statutory Authority: Chapter 49.17 RCW. 89-11-035 (Order 89-03), § 296-155-370, filed 5/15/89, effective 6/30/89. Statutory Authority: RCW 49.17.040 and 49.17.050. 86-03-074 (Order 86-14), § 296-155-370, filed 1/21/86; Order 74-26, § 296-155-370, filed 5/7/74, effective 6/6/74.]

WAC 296-155-375 Jacks—Lever and ratchet, screw, and hydraulic. General requirements.

(1) The manufacturer's rated capacity shall be legibly marked on all jacks and this capacity shall not be exceeded.

(2) All jacks shall have a positive stop to prevent overtravel.

(3) Specially designed jacks constructed for specific purposes shall meet the approval of the department of labor and industries before being placed in service.

(4) Control parts shall be so designed that the operator will not be subjected to hazard.

(5) Blocking. When it is necessary to provide a firm foundation, the base of the jack shall be blocked or cribbed. Where there is a possibility of slippage of the metal cap of the jack, a wood block shall be placed between the cap and the load.

(6) Operation and maintenance.

(a) After the load has been raised, it shall immediately be cribbed, blocked, or otherwise secured.

(b) Hydraulic jacks exposed to freezing temperatures shall be supplied with an adequate antifreeze liquid.

(c) All jacks shall be properly lubricated at regular intervals. The lubricating instructions of the manufacturer should be followed, and only lubricants recommended by the manufacturer should be used.

(7) Each jack shall be thoroughly inspected at times which depend upon the service conditions. Inspections shall be not less frequent than the following:

(a) For constant or intermittent use at one locality, once every six months;

(b) For jacks sent out of shop for special work, when sent out and when returned;

(c) For a jack subjected to abnormal load or shock, immediately before and immediately thereafter.

(8) Repair or replacement parts shall be examined for possible defects.

(9) Jacks which are out of order shall be tagged accordingly, and shall not be used until repairs are made.

[Statutory Authority: Chapter 49.17 RCW. 94-15-096 (Order 94-07), § 296-155-375, filed 7/20/94, effective 9/20/94; 93-04-111 (Order 92-15), § 296-155-375, filed 2/3/93, effective 3/15/93; 91-11-070 (Order 91-01), § 296-155-375, filed 5/20/91, effective 6/20/91; Order 74-26, § 296-155-375, filed 5/7/74, effective 6/6/74.]

WAC 296-155-380 Air receivers. (1) Application. This section applies to compressed air receivers, and other equipment used in providing and utilizing compressed air for performing operations such as cleaning, drilling, hoisting, and chipping. On the other hand, however, this section does not deal with the special problems created by using compressed air to convey materials nor the problems created when persons work in compressed air as in tunnels and caissons. These standards are not intended to apply to compressed air machinery and equipment used on transportation vehicles such as steam railroad cars, electric railway cars, and automotive equipment.

(2) New and existing equipment.

(a) All new air receivers installed after the effective date of these standards shall be constructed in accordance with the 1968 Edition of the A.S.M.E. Boiler and Pressure Vessel Code, section VIII.

(b) All safety valves used shall be constructed, installed, and maintained in accordance with the A.S.M.E. Boiler and Pressure Vessel Code, section VIII Edition 1968.

(3) Installation. Air receivers shall be so installed that all drains, handholes, and manholes therein are easily accessible. Air receivers should be supported with sufficient clearance to permit a complete external inspection and to avoid corrosion of external surfaces. Under no circumstances shall an air receiver be buried underground or located in an inaccessible place. The receiver should be located as close to the compressor or after-cooler as is possible in order to keep the discharge pipe short.

(4) Drains and traps. All air receivers having an internal and external operating pressure exceeding 15 psi with no limitation on size, and air receivers having an inside diameter exceeding six inches, with no limitation on pressure, if subject to corrosion, shall be supplied with a drain pipe and valve at the lowest point in the vessel; or a pipe may be used extending inward from any other location to within one-quar-

ter inch of the lowest point. Adequate automatic traps may be installed in addition to drain valves. The drain valve on the air receiver shall be opened and the receiver completely drained frequently and at such intervals as to prevent the accumulation of oil and water in the receiver.

(5) Gages and valves.

(a) Every air receiver shall be equipped with an indicating pressure gage (so located as to be readily visible) and with one or more spring-loaded safety valves. The total relieving capacity of such safety valves shall be such as to prevent pressure in the receiver from exceeding the maximum allowable working pressure of the receiver by more than ten percent.

(b) No valve of any type shall be placed between the air receiver and its safety valve or valves.

(c) Safety appliances, such as safety valves, indicating devices and controlling devices, shall be constructed, located, and installed so that they cannot be readily rendered inoperative by any means, including the elements.

(d) All safety valves shall be tested frequently and at regular intervals to determine whether they are in good operating condition.

[Statutory Authority: Chapter 49.17 RCW. 94-15-096 (Order 94-07), § 296-155-380, filed 7/20/94, effective 9/20/94.]

PART H
WELDING AND CUTTING

WAC 296-155-400 Gas welding and cutting. (1) Transporting, moving, and storing compressed gas cylinders.

(a) Valve protection caps shall be in place and secured.

(b) When cylinders are hoisted, they shall be secured on a cradle, slingboard, or pallet. They shall not be hoisted or transported by means of magnets or choker slings.

(c) Cylinders shall be moved by tilting and rolling them on their bottom edges. They shall not be intentionally dropped, struck, or permitted to strike each other violently.

(d) When cylinders are transported by powered vehicles, they shall be secured in a vertical position.

(e) Valve protection caps shall not be used for lifting cylinders from one vertical position to another. Bars shall not be used under valves or valve protection caps to pry cylinders loose when frozen. Warm, not boiling, water shall be used to thaw cylinders loose.

(f) Unless cylinders are firmly secured on a special carrier intended for this purpose, regulators shall be removed and valve protection caps put in place before cylinders are moved.

(g) A suitable cylinder truck, chain, or other steadying device shall be used to keep cylinders from being knocked over while in use. Such cylinders are not considered to be "in storage."

(h) When a job is finished, when cylinders are empty or when cylinders are moved at any time, the cylinder valve shall be closed.

(i) Compressed gas cylinders shall be secured in an upright position at all times except, if necessary, for short periods of time while cylinders are actually being hoisted or carried.

(j) Oxygen. Oxygen cylinders in storage shall be separated from fuel-gas cylinders or combustible materials (especially oil or grease), a minimum distance of 20 feet or by a noncombustible barrier at least 5 feet high having a fire-resistance rating of at least one-half hour.

(2) Placing cylinders.

(a) Cylinders shall be kept far enough away from the actual welding or cutting operation so that sparks, hot slag, or flame will not reach them. When this is impractical, fire resistant shields shall be provided.

(b) Cylinders shall be placed where they cannot become part of an electrical circuit. Electrodes shall not be struck against a cylinder to strike an arc.

(c) Fuel gas cylinders shall be placed with valve end up whenever they are in use. They shall not be placed in a location where they would be subject to open flame, hot metal, or other sources of artificial heat.

(d) Cylinders containing oxygen or acetylene or other fuel gas shall not be taken into confined spaces.

(3) Treatment of cylinders.

(a) Cylinders, whether full or empty, shall not be used as rollers or supports.

(b) No person other than the gas supplier shall attempt to mix gases in a cylinder. No one except the owner of the cylinder or person authorized by the owner, shall refill a cylinder. No one shall use a cylinder's contents for purposes other than those intended by the supplier. All cylinders used shall meet the department of transportation requirements, Specification for Cylinders, (49 CFR Part 178, Subpart C).

(c) No damaged or defective cylinder shall be used.

(4) Use of fuel gas. The employer shall thoroughly instruct employees in the safe use of fuel gas, as follows:

(a) Before a regulator to a cylinder valve is connected, the valve shall be opened slightly and closed immediately. (This action is generally termed "cracking" and is intended to clear the valve of dust or dirt that might otherwise enter the regulator.) The person cracking the valve shall stand to one side of the outlet, not in front of it. The valve of a fuel gas cylinder shall not be cracked where the gas would reach welding work, sparks, flame, or other possible sources of ignition.

(b) The cylinder valve shall always be opened slowly to prevent damage to the regulator. For quick closing, valves on fuel gas cylinders shall not be opened more than 1 1/2 turns. When a special wrench is required, it shall be left in position on the stem of the valve while the cylinder is in use so that the fuel gas flow can be shut off quickly in case of an emergency. In the case of manifolded or coupled cylinders, at least one such wrench shall always be available for immediate use. Nothing shall be placed on top of a fuel gas cylinder, when in use, which may damage the safety device or interfere with the quick closing of the valve.

(c) Fuel gas shall not be used from cylinders through torches or other devices which are equipped with shutoff valves without reducing the pressure through a suitable regulator attached to the cylinder valve or manifold.

(d) Before a regulator is removed from a cylinder valve, the cylinder valve shall always be closed and the gas released from the regulator.

(e) If, when the valve on a fuel gas cylinder is opened, there is found to be a leak around the valve stem, the valve shall be closed and the gland nut tightened. If this action does not stop the leak, the use of the cylinder shall be discontinued, and it shall be properly tagged and removed from the

work area. In the event that fuel gas should leak from the cylinder valve, rather than from the valve stem, and the gas cannot be shut off, the cylinder shall be properly tagged and removed from the work area. If a regulator attached to a cylinder valve will effectively stop a leak through the valve seat, the cylinder need not be removed from the work area.

(f) If a leak should develop at a fuse plug or other safety device, the cylinder shall be removed from the work area.

(g) Cylinders not having fixed hand wheels shall have keys, handles, or nonadjustable wrenches on valve stems while in service. In multiple cylinder installations one and only one key or handle is required for each manifold.

(5) Fuel gas and oxygen manifolds.

(a) Fuel gas and oxygen manifolds shall bear the name of the substance they contain in letters at least 1-inch high which shall be either painted on the manifold or on a sign permanently attached to it.

(b) Fuel gas and oxygen manifolds shall be placed in safe, well ventilated, and accessible locations. They shall not be located within enclosed spaces.

(c) Manifold hose connections, including both ends of the supply hose that lead to the manifold, shall be such that the hose cannot be interchanged between fuel gas and oxygen manifolds and supply header connections. Adapters shall not be used to permit the interchange of hose. Hose connections shall be kept free of grease and oil.

(d) When not in use, manifold and header hose connections shall be capped.

(e) Nothing shall be placed on top of a manifold, when in use, which will damage the manifold or interfere with the quick closing of the valves.

(6) Hose.

(a) Fuel gas hose and oxygen hose shall be easily distinguishable from each other. The contrast may be made by different colors or by surface characteristics readily distinguishable by the sense of touch. Oxygen and fuel gas hoses shall not be interchangeable. A single hose having more than one gas passage shall not be used.

(b) When parallel sections of oxygen and fuel gas hose are taped together, not more than 4 inches out of 12 inches shall be covered by tape.

(c) All hose in use, carrying acetylene, oxygen, natural or manufactured fuel gas, or any gas or substance which may ignite or enter into combustion, or be in any way harmful to employees, shall be inspected at the beginning of each working shift. Defective hose shall be removed from service.

(d) Hose which has been subject to flashback, or which shows evidence of severe wear or damage, shall be tested to twice the normal pressure to which it is subject, but in no case less than 300 p.s.i. Defective hose, or hose in doubtful condition, shall not be used.

(e) Hose couplings shall be of the type that cannot be unlocked or disconnected by means of a straight pull without rotary motion.

(f) Boxes used for the storage of gas hose shall be ventilated.

(g) Hoses, cables, and other equipment shall be kept clear of passageways, ladders and stairs.

(7) Torches.

(a) Clogged torch tip openings shall be cleaned with suitable cleaning wires, drills, or other devices designed for such purpose.

(b) Torches in use shall be inspected at the beginning of each working shift for leaking shutoff valves, hose couplings, and tip connections. Defective torches shall not be used.

(c) Torches shall be lighted by friction lighters or other approved devices, and not by matches or from hot work.

(8) Regulators and gauges. Oxygen and fuel gas pressure regulators, including their related gauges, shall be in proper working order while in use.

(9) Oil and grease hazards. Oxygen cylinders and fittings shall be kept away from oil or grease. Cylinders, cylinder caps and valves, couplings, regulators, hose, and apparatus shall be kept free from oil or greasy substances and shall not be handled with oily hands or gloves. Oxygen shall not be directed at oily surfaces, greasy clothes, or within a fuel oil or other storage tank or vessel.

(10) Additional rules. For additional details not covered in this Part, applicable portions of American National Standards Institute, Z49.1-1973, Safety in Welding and Cutting, shall apply.

[Statutory Authority: Chapter 49.17 RCW. 94-15-096 (Order 94-07), § 296-155-400, filed 7/20/94, effective 9/20/94. Statutory Authority: RCW 49.17.040 and 49.17.050. 86-03-074 (Order 86-14), § 296-155-400, filed 1/21/86; Order 74-26, § 296-155-400, filed 5/7/74, effective 6/6/74.]

WAC 296-155-405 Arc welding and cutting. (1) Manual electrode holders.

(a) Only manual electrode holders which are specifically designed for arc welding and cutting, and are of a capacity capable of safely handling the maximum rated current required by the electrodes, shall be used.

(b) Any current-carrying parts passing through the portion of the holder which the arc welder or cutter grips in the hand, and the outer surfaces of the jaws of the holder, shall be fully insulated against the maximum voltage encountered to ground.

(2) Welding cables and connectors.

(a) All arc welding and cutting cables shall be of the completely insulated, flexible type, capable of handling the maximum current requirements of the work in progress, taking into account the duty cycle under which the arc welder or cutter is working.

(b) Only cable free from repair or splices for a minimum distance of 10 feet from the cable end to which the electrode holder is connected shall be used, except that cables with standard insulated connectors or with splices whose insulating quality is equal to that of the cable are permitted.

(c) When it becomes necessary to connect or splice lengths of cable one to another, substantial insulated connectors of a capacity at least equivalent to that of the cable shall be used. If connections are effected by means of cable lugs, they shall be securely fastened together to give good electrical contact, and the exposed metal parts of the lugs shall be completely insulated.

(d) Cables in need of repair shall not be used. When a cable, other than the cable lead referred to in subdivision (b) of this subsection, becomes worn to the extent of exposing bare conductors, the portion thus exposed shall be protected

by means of rubber and friction tape or other equivalent insulation.

(3) Ground returns and machine grounding.

(a) A ground return cable shall have a safe current carrying capacity equal to or exceeding the specified maximum output capacity of the arc welding or cutting unit which it services. When a single ground return cable services more than one unit, its safe current-carrying capacity shall equal or exceed the total specified maximum output capacities of all the units which it services.

(b) Pipelines containing gases or flammable liquids, or conduits containing electrical circuits, shall not be used as a ground return. For welding on natural gas pipelines, the technical portions of regulations issued by the Department of Transportation, Office of Pipeline Safety, Minimum Federal Safety Standards for Gas Pipelines shall apply. (49 CFR Part 192, Subpart C.)

(c) When a structure or pipeline is employed as a ground return circuit, it shall be determined that the required electrical contact exist at all joints. The generation of an arc, sparks, or heat at any point shall cause rejection of the structures as a ground circuit.

(d) When a structure or pipeline is continuously employed as a ground return circuit, all joints shall be bonded, and periodic inspections shall be conducted to ensure that no condition of electrolysis or fire hazard exists by virtue of such use.

(e) The frames of all arc welding and cutting machines shall be grounded either through a third wire in the cable containing the circuit conductor or through a separate wire which is grounded at the source of the current. Grounding circuits, other than by means of the structure, shall be checked to ensure that the circuit between the ground and the grounded power conductor has resistance low enough to permit sufficient current to flow to cause the fuse or circuit breaker to interrupt the current.

(f) All ground connections shall be inspected to ensure that they are mechanically strong and electrically adequate for the required current.

(4) Operating instructions. Employers shall instruct employees in the safe means of arc welding and cutting as follows:

(a) When electrode holders are to be left unattended, the electrodes shall be removed and the holders shall be so placed or protected that they cannot make electrical contact with employees or conducting objects.

(b) Hot electrode holders shall not be dipped in water; to do so may expose the arc welder or cutter to electric shock.

(c) When the arc welder or cutter has occasion to leave work or to stop work for any appreciable length of time, or when the arc welding or cutting machine is to be moved, the power supply switch to the equipment shall be opened.

(d) Any faulty or defective equipment shall be reported to the supervisor.

(e) See WAC 296-155-452 for additional requirements.

(5) Shielding. Whenever practical, all arc welding and cutting operations shall be shielded by noncombustible or flameproof screens which will protect employees and other persons working in the vicinity from the direct rays of the arc.

(6) Employee protection. Where welding or cutting operations are being performed in areas where it is possible for molten slag to contact other employees, those employees shall be protected from being burned by providing overhead protection, barricading the impact area, or other effective means.

[Statutory Authority: Chapter 49.17 RCW. 94-15-096 (Order 94-07), § 296-155-405, filed 7/20/94, effective 9/20/94; 88-23-054 (Order 88-25), § 296-155-405, filed 11/14/88. Statutory Authority: RCW 49.17.040 and 49.17.050. 86-03-074 (Order 86-14), § 296-155-405, filed 1/21/86; Order 74-26, § 296-155-405, filed 5/7/74, effective 6/6/74.]

WAC 296-155-407 Protective clothing. (1) General requirements. Employees exposed to the hazards created by welding, cutting, or brazing operations shall be protected by personal protective equipment in accordance with the requirements of chapter 296-800 WAC, chapter 296-24 WAC, Part I and WAC 296-800-160. Appropriate protective clothing required for any welding operation will vary with the size, nature and location of the work to be performed.

(2) Specified protective clothing. Protective means which may be employed are as follows:

(a) Except when engaged in light work, all welders should wear flameproof gauntlet gloves.

(b) Flameproof aprons made of leather, or other suitable material may also be desirable as protection against radiated heat and sparks.

(c) Woolen clothing preferable to cotton because it is not so readily ignited and helps protect the welder from changes in temperature. Cotton clothing, if used, should be chemically treated to reduce its combustibility. All outer clothing such as jumpers or overalls should be reasonably free from oil or grease.

(d) Sparks may lodge in rolled-up sleeves or pockets of clothing, or cuffs of overalls or trousers. It is therefore recommended that sleeves and collars be kept buttoned and pockets be eliminated from the front of overalls and aprons. Trousers or overalls should not be turned up on the outside.

Note: For heavy work, fire-resistant leggings, high boots, or other equivalent means should be used.

(e) In production work a sheet metal screen in front of the worker's legs can provide further protection against sparks and molten metal in cutting operations.

(f) Capes or shoulder covers made of leather or other suitable materials should be worn during overhead welding or cutting operations. Leather skull caps may be worn under helmets to prevent head burns.

(g) Where there is exposure to sharp or heavy falling objects, or a hazard of bumping in confined spaces, hard hats or head protectors shall be used.

[Statutory Authority: RCW 49.17.010, [49.17].040, and [49.17].050. 01-11-038, § 296-155-407, filed 5/9/01, effective 9/1/01. Statutory Authority: Chapter 49.17 RCW. 95-04-007, § 296-155-407, filed 1/18/95, effective 3/1/95. Statutory Authority: RCW 49.17.040 and 49.17.050. 86-03-074 (Order 86-14), § 296-155-407, filed 1/21/86.]

WAC 296-155-410 Fire prevention. (1) When practical, objects to be welded, cut, or heated shall be moved to a designated safe location or, if the objects to be welded, cut, or heated cannot be readily moved, all movable fire hazards in the vicinity shall be taken to a safe place, or otherwise protected.

(2) If the object to be welded, cut, or heated cannot be moved and if all the fire hazards cannot be removed, positive means shall be taken to confine the heat, sparks, and slag, and to protect the immovable fire hazards from them.

(3) No welding, cutting, or heating shall be done where the application of flammable paints, or the presence of other flammable compounds, or heavy dust concentrations creates a hazard.

(4) Suitable fire extinguishing equipment shall be immediately available in the work area and shall be maintained in a state of readiness for instant use.

(5) When the welding, cutting, or heating operation is such that normal fire prevention precautions are not sufficient, additional personnel shall be assigned to guard against fire while the actual welding, cutting, or heating operation is being performed, and for a sufficient period of time after completion of the work to ensure that no possibility of fire exists. Such personnel shall be instructed as to the specific anticipated fire hazards and how the firefighting equipment provided is to be used.

(6) When welding, cutting, or heating is performed on walls, floors, and ceilings, since direct penetration of sparks or heat transfer may introduce a fire hazard to an adjacent area, the same precautions shall be taken on the opposite side as are taken on the side on which the welding is being performed.

(7) For the elimination of possible fire in enclosed spaces as a result of gas escaping through leaking or improperly closed torch valves, the gas supply to the torch shall be positively shut off at some point outside the enclosed space whenever the torch is not to be used or whenever the torch is left unattended for a substantial period of time, such as during the lunch period. Overnight and at the change of shifts, the torch and hose shall be removed from the confined space. Open end fuel gas and oxygen hoses shall be immediately removed from enclosed spaces when they are disconnected from the torch or other gas-consuming device.

(8) Except when the contents are being removed or transferred, drums, pails, and other containers, which contain or have contained flammable liquids, shall be kept closed. Empty containers shall be removed to a safe area apart from hot work operations or open flames.

(9) Drums, containers, or hollow structures which have contained toxic or flammable substances shall, before welding, cutting, or heating is undertaken on them, either be filled with water or thoroughly cleaned of such substances and ventilated and tested. For welding, cutting and heating on steel pipelines containing natural gas, the pertinent portions of regulations issued by the Department of Transportation, Office of Pipeline Safety, Minimum Federal Safety Standards for Gas Pipelines, shall apply. (49 CFR Part 192, Subpart C.)

(10) Before heat is applied to a drum, container, or hollow structure, a vent or opening shall be provided for the release of any built-up pressure during the application of heat.

[Order 74-26, § 296-155-410, filed 5/7/74, effective 6/6/74.]

WAC 296-155-415 Ventilation and protection in welding, cutting, and heating. (1) Mechanical ventilation. For purposes of this section, mechanical ventilation shall meet the following requirements:

(a) Mechanical ventilation shall consist of either general mechanical ventilation systems or local exhaust systems.

(b) General mechanical ventilation shall be of sufficient capacity and so arranged as to produce the number of air changes necessary to maintain welding fumes and smoke within safe limits, as defined in Part B of this chapter.

(c) Local exhaust ventilation shall consist of freely movable hoods intended to be placed by the welder or burner as close as practicable to the work. This system shall be of sufficient capacity and so arranged as to remove fumes and smoke at the source and keep the concentration of them in the breathing zone within safe limits as defined in Part B of this chapter.

(d) Contaminated air exhausted from a working space shall be discharged into the open air or otherwise clear of the source of intake air.

(e) All air replacing that withdrawn shall be clean and respirable.

(f) Oxygen shall not be used for ventilation purposes, comfort cooling, blowing dust from clothing, or for cleaning the work area.

(2) Welding, cutting, and heating in confined spaces.

(a) Except as provided in subdivision (b) of this subsection and subdivision (b) of subsection (3) of this section, either general mechanical or local exhaust ventilation meeting the requirements of subsection (1) of this section shall be provided whenever welding, cutting, or heating is performed in a confined space.

(b) When sufficient ventilation cannot be obtained without blocking the means of access, employees in the confined space shall be protected by air line respirators in accordance with the requirements of Part C of this chapter, and an employee on the outside of such a confined space shall be assigned to maintain communication with those working within it and to aid them in an emergency.

(3) Welding, cutting, or heating of metals of toxic significance.

(a) Welding, cutting, or heating in any enclosed spaces involving the metals specified in this subsection shall be performed with either general mechanical or local exhaust ventilation meeting the requirements of subsection (1) of this section:

(i) Zinc-bearing base or filler metals or metals coated with zinc-bearing materials.

(ii) Lead base metals;

(iii) Cadmium-bearing filler materials;

(iv) Chromium-bearing metals or metals coated with chromium-bearing materials.

(b) Welding, cutting, or heating in any enclosed spaces involving the metals specified in this subdivision shall be performed with local exhaust ventilation in accordance with the requirements of subsection (1) of this section, or employees shall be protected by air line respirators in accordance with the requirements of Part C of this chapter.

(i) Metals containing lead, other than as an impurity, or metals coated with lead-bearing materials;

(ii) Cadmium-bearing or cadmium-coated base metals;

(iii) Metals coated with mercury-bearing metals;

(iv) Beryllium-containing base or filler metals. Because of its high toxicity, work involving beryllium shall be done with both local exhaust ventilation and air line respirators.

(c) Employees performing such operations in the open air shall be protected by filter-type respirators in accordance with the requirements of Part C of this chapter, except that employees performing such operations on beryllium-containing base or filler metals shall be protected by air line respirators in accordance with the requirements of Part C of this chapter.

(d) Other employees exposed to the same atmosphere as the welders or burners shall be protected in the same manner as the welder or burner.

(4) Inert-gas metal-arc welding.

(a) Since the inert-gas metal-arc welding process involves the production of ultra-violet radiation of intensities of 5 to 30 times that produced during shielded metal-arc welding, the decomposition of chlorinated solvents by ultra-violet rays, and the liberation of toxic fuels and gases, employees shall not be permitted to engage in, or be exposed to the process until the following special precautions have been taken:

(i) The use of chlorinated solvents shall be kept at least 200 feet, unless shielded, from the exposed arc, and surfaces prepared with chlorinated solvents shall be thoroughly dry before welding is permitted on such surfaces.

(ii) Employees in the area not protected from the arc by screening shall be protected by filter lenses meeting the requirements of Part C of this chapter. When two or more welders are exposed to each other's arc, filter lens goggles of a suitable type, meeting the requirements of Part C of this chapter shall be worn under welding helmets. Hand shields to protect the welder against flashes and radiant energy shall be used when either the helmet is lifted or the shield is removed.

(iii) Welders and other employees who are exposed to radiation shall be suitably protected so that the skin is covered completely to prevent burns and other damage by ultra-violet rays. Welding helmets and hand shields shall be free of leaks and openings, and free of highly reflective surfaces.

(iv) When inert-gas metal-arc welding is being performed on stainless steel, the requirements of subdivision (b) of subsection (3) of this section shall be met to protect against dangerous concentrations of nitrogen dioxide.

(5) General welding, cutting, and heating.

(a) Welding, cutting, and heating, not involving conditions or materials described in subsections (2), (3), or (4) of this section, may normally be done without mechanical ventilation or respiratory protective equipment, but where, because of unusual physical or atmospheric conditions, an unsafe accumulation of contaminants exists, suitable mechanical ventilation or respiratory protective equipment shall be provided.

(b) Employees performing any type of welding, cutting, or heating shall be protected by suitable eye protective equipment in accordance with the requirements of Part C of this chapter.

[Order 74-26, § 296-155-415, filed 5/7/74, effective 6/6/74.]

WAC 296-155-420 Welding, cutting, and heating in way of preservative coatings. (1) Before welding, cutting, or heating is commenced on any surface covered by a preservative coating whose flammability is not known, a test shall be made by a competent person to determine its flammability. Preservative coatings shall be considered to be highly flammable when scrapings burn with extreme rapidity.

(2) Precautions shall be taken to prevent ignition of highly flammable hardened preservative coatings. When coatings are determined to be highly flammable, they shall be stripped from the area to be heated to prevent ignition.

(3) Protection against toxic preservative coatings:

(a) In enclosed spaces, all surfaces covered with toxic preservatives shall be stripped of all toxic coatings for a distance of at least 4 inches from the area of heat application, or the employees shall be protected by air line respirators, meeting the requirements of Part C of this chapter.

(b) In the open air, employees shall be protected by a respirator, in accordance with requirements of Part C of this chapter.

(4) The preservative coatings shall be removed a sufficient distance from the area to be heated to ensure that the temperature of the unstripped metal will not be appreciably raised. Artificial cooling of the metal surrounding the heating area may be used to limit the size of the area required to be cleaned.

[Order 74-26, § 296-155-420, filed 5/7/74, effective 6/6/74.]

PART I
ELECTRICAL

WAC 296-155-426 Introduction. This part addresses electrical safety requirements that are necessary for the practical safeguarding of employees involved in construction work and is divided into four major divisions and applicable definitions as follows:

(1) Introduction and definitions. Definitions applicable to this part are contained in WAC 296-155-462.

(2) Installation safety requirements. Installation safety requirements are contained in WAC 296-155-441 through 296-155-459. Included in this category are electric equipment and installations used to provide electric power and light on jobsites.

(3) Safety-related work practices. Safety-related work practices are contained in WAC 296-155-428 and 296-155-429. In addition to covering the hazards arising from the use of electricity at jobsites, these regulations also cover the hazards arising from the accidental contact, direct or indirect, by employees with all energized lines, above or below ground, passing through or near the jobsite.

(4) Safety-related maintenance and environmental considerations. Safety-related maintenance and environmental considerations are contained in WAC 296-155-432 and 296-155-434.

(5) Safety requirements for special equipment. Safety requirements for special equipment are contained in WAC 296-155-437.

[Statutory Authority: Chapter 49.17 RCW. 88-11-021 (Order 88-04), § 296-155-426, filed 5/11/88.]

WAC 296-155-428 General requirements. (1) Protection of employees.

(a) No employer shall permit an employee to work in such proximity to any part of an electric power circuit that the employee could contact the electric power circuit in the course of work, unless the employee is protected against electric shock by de-energizing the circuit and grounding it or by guarding it effectively by insulation or other means.

(b) No person, firm, corporation, or agent of same, shall require or permit any employee to perform any function in proximity to electrical conductors or to engage in any excavation, construction, demolition, repair, or other operation, unless and until danger from accidental contact with said electrical conductors has been effectively guarded by de-energizing the circuit and grounding it or by guarding it by effective insulation or other effective means.

(c) In work areas where the exact location of underground electric powerlines is unknown, no activity which may bring employees into contact with those powerlines shall begin until the powerlines have been positively and unmistakably de-energized and grounded.

(d) Before work is begun the employer shall ascertain by inquiry or direct observation, or by instruments, whether any part of an energized electric power circuit, exposed or concealed, is so located that the performance of the work may bring any person, tool, or machine into physical or electrical contact with the electric power circuit. The employer shall post and maintain proper warning signs where such a circuit exists. The employer shall advise employees of the location of such lines, the hazards involved, and the protective measures to be taken.

(e) No work shall be performed, no material shall be piled, stored or otherwise handled, no scaffolding, commercial signs, or structures shall be erected or dismantled, nor any tools, machinery or equipment operated within the specified minimum distances from any energized high voltage electrical conductor capable of energizing the material or equipment; except where the electrical distribution and transmission lines have been de-energized and visibly grounded at point of work, or where insulating barriers not a part of or an attachment to the equipment have been erected, to prevent physical contact with the lines, equipment shall be operated proximate to, under, over, by, or near energized conductors only in accordance with the following:

(i) For lines rated 50 kV. or below, minimum clearance between the lines and any part of the equipment or load shall be ten feet.

(ii) For lines rated over 50 kV. minimum, clearance between the lines and any part of the equipment or load shall be ten feet plus 0.4 inch or each 1 kV. over 50 kV., or twice the length of the line insulator but never less than ten feet.

(f) Work on energized equipment. Only qualified persons shall work on electric circuit parts of equipment that have not been deenergized under the procedures of WAC 296-155-429(4). Such persons shall be capable of working safely on energized circuits and shall be familiar with the proper use of special precautionary techniques, personal protective equipment, insulating and shielding materials, and insulated tools.

(g) Overhead electric lines. Where overhead electric conductors are encountered in proximity to a work area, the employer shall be responsible for:

(i) Ascertaining the voltage and minimum clearance distance required; and

(ii) Maintaining the minimum clearance distance; and

(iii) Ensuring that the requirements of this section are complied with.

(h) If relocation of the electrical conductors is necessary, arrangements shall be made with the owners of the lines for such relocation.

(i) Barriers.

(i) Barriers shall be of such character and construction as to effectively provide the necessary protection without creating other hazards or jeopardizing the operation of the electrical circuits.

(ii) Barriers installed within the ten feet clearance from conductors shall be installed only under the supervision of authorized and qualified persons and this shall include a representative of the electrical utility or owner involved.

(j) Exceptions.

(i) These rules do not apply to the construction, reconstruction, operation, and maintenance, of overhead electrical lines, structures, and associated equipment by authorized and qualified electrical workers.

(ii) These rules do not apply to authorized and qualified employees engaged in the construction, reconstruction, operation, and maintenance, of overhead electrical circuits or conductors and associated equipment of rail transportation systems or electrical generating, transmission, distribution and communication systems which are covered by chapters 296-45 and 296-32 WAC.

(k) Special precautions must be taken.

(i) When handling any winch lines, guy wires, or other free cable, wire or rope in the vicinity of any electrical conductors.

(ii) When pulling a winch line, or other cable or rope under energized electrical conductors from a boom, mast, pile driver, etc., in such a manner as to make possible an approach to within ten feet of a conductor.

(iii) When there is possibility of a winch line, cable, etc., either becoming disconnected or breaking under load because of excessive strain and flipping up into overhead conductors.

(iv) When placing steel, concrete reinforcement, wire mesh, etc.

(v) When handling pipe or rod sections in connection with digging wells or test holes.

(vi) When moving construction equipment, apparatus, machinery, etc., all such movements must avoid striking supporting structures, guy wires, or other elements of the electrical utility system causing the conductors to so swing or move as to decrease clearances to less than ten feet from construction equipment, or to cause them to come together.

(l) Warning sign required.

(i) An approved durable warning sign legible at twelve feet, reading "It is unlawful to operate this equipment within ten feet of electrical conductors" shall be posted and maintained in plain view of the operator at the controls of each crane, derrick, shovel, drilling rig, pile driver or similar apparatus which is capable of vertical, lateral or swinging motion.

(ii) A similar sign shall be installed on the outside of the equipment and located as to be readily visible to mechanics or other persons engaged in the work operation.

(iii) Signs shall be not less than 6" x 8" dimensions with the word "WARNING" or "DANGER" in large letters and painted red across the top and the other letters in black painted on yellow background.

(m) Any overhead wire shall be considered to be an energized line until the owner of such line or the electrical utility authorities indicate that it is not an energized line and it has been visibly grounded.

(2) Passageways and open spaces.

(a) Barriers or other means of guarding shall be provided to ensure that workspace for electrical equipment will not be used as a passageway during periods when energized parts of electrical equipment are exposed.

(b) Working spaces, walkways, and similar locations shall be kept clear of cords so as not to create a tripping hazard to employees.

(3) Load ratings. In existing installations, no changes in circuit protection shall be made to increase the load in excess of the load rating of the circuit wiring.

(4) Fuses. When fuses are installed or removed with one or both terminals energized, special tools insulated for the voltage shall be used.

(5) Cords and cables.

(a) Worn or frayed electric cords or cables shall not be used.

(b) Extension cords shall not be fastened with staples, hung from nails, or suspended by wire.

(6) Interlocks. Only a qualified person following the requirements of this section may defeat an electrical safety interlock, and then only temporarily while they are working on the equipment. The interlock systems shall be returned to its operable condition when this work is completed.

(7) Portable electric equipment—Handling. Portable equipment shall be handled in a manner which will not cause damage. Flexible electric cords connected to equipment shall not be used for raising or lowering the equipment. Flexible cords shall not be fastened with staples or otherwise hung in such a fashion as could damage the outer jacket or insulation.

(8) Visual inspection. When an attachment plug is to be connected to a receptacle (including any on a cord set), the relationship of the plug and receptacle contacts shall first be checked to ensure they are of proper mating configurations.

(9) Connecting attachment plugs.

(a) Employees' hands shall not be wet when plugging and unplugging flexible cords and cord- and plug-connected equipment, if energized equipment is involved.

(b) Energized plug and receptacle connections shall be handled only with insulating protective equipment if the condition of the connection could provide a conducting path to the employee's hand (if, for example, a cord connector is wet from being immersed in water).

(c) Locking-type connectors shall be properly secured after connection.

(10) Routine opening and closing circuits. Load rated switches, circuit breakers, or other devices specifically designed as disconnecting means shall be used for the opening, reversing, or closing of circuits under load conditions. Cable connectors not of the load-break type, fuses, terminal lugs, and cable splice connections shall not be used for such purposes, except in an emergency.

(11) Reclosing circuits after protective device operation. After a circuit is deenergized by a circuit protective device, the circuit shall not be manually reenergized until it has been determined that the equipment and circuit can be safety energized. This repetitive manual reclosing of circuit breakers or reenergizing circuits through replaced fuses is prohibited.

Note: When it can be determined from the design of the circuit and the overcurrent devices involved that the automatic operation of a device was caused by an overload rather than a fault connection, no examination of the circuit or connected equipment is needed before the circuit is reenergized.

(12) Test instruments and equipment—Use. Only qualified persons shall perform testing work on electric circuits or equipment.

(13) Visual inspection. Test instruments and equipment and all associated test leads, cables, power cords, probes, and connectors shall be visually inspected for external defects and damage before the equipment is used. If there is a defect or evidence of damage that might expose an employee to injury, the defective or damaged item shall be removed from service, and no employee shall use it until necessary repairs and tests to render the equipment safe have been made.

(14) Rating of equipment. Test instruments and equipment and their accessories shall be rated for the circuits and equipment to which they will be connected and shall be designed for the environment in which they will be used.

(15) Occasional use of flammable or ignitible materials. Where flammable materials are present only occasionally, electric equipment capable of igniting them shall not be used, unless measures are taken to prevent hazardous conditions from developing. Such materials include, but are not limited to: Flammable gases, vapors, or liquids; combustible dust; and ignitible fibers or flyings.

(16) Work on energized equipment. Only qualified persons shall work on electric circuit parts of equipment that have not been deenergized under the procedures of WAC 296-155-429(4). Such persons shall be capable of working safely on energized circuits and shall be familiar with the proper use of special precautionary techniques, personal protective equipment, insulating and shielding materials, and insulated tools.

(17) Overhead lines. If work is to be performed near overhead lines, the lines shall be deenergized and grounded, or other protective measures shall be provided before work is started. If the lines are to be deenergized, arrangements shall be made with the person or organization that operates or controls the electric circuits involved to deenergize and ground them. If protective measures, such as guarding, isolating, or insulating, these precautions shall prevent employees from contacting such lines directly with any part of their body or indirectly through conductive materials, tools, or equipment.

(18) Unqualified persons. When an unqualified person is working in an elevated position, or on the ground, near overhead lines, the location shall be such that the person and the longest conductive object they may contact cannot come closer to any unguarded, energized overhead line than the following distances:

(a) For voltages to ground 50kV or below—10 ft.;

(b) For voltages to ground over 50kV—10 ft. plus 0.4 inch for every 1kV over 50kV.

(19) Qualified persons. When a qualified person is working in the vicinity of overhead lines, whether in an elevated position or on the ground, the person shall not approach or take any conductive object without an approved insulating handle closer to exposed energized parts that are shown in subsection (1)(e) of this section unless:

(a) The person is insulated from the energized part (gloves, with sleeves if necessary), rated for the voltage involved are considered to be insulation of the person from the energized part on which work is performed; or

(b) The energized part is insulated both from all other conductive objects at a different potential and from the person; or

(c) The person is insulated from all conductive objects at a potential different from that of the energized part.

(20) Vehicular and mechanical equipment.

(a) Any vehicle or mechanical equipment capable of having parts of its structure elevated near energized overhead lines shall be operated so that a clearance of 10 ft. is maintained. If the voltage is higher than 50kV, the clearance shall be increased 0.4 inch for every 1kV over the voltage. However, under any of the following conditions, the clearance may be reduced:

(i) If the vehicle is in transit with its structure lowered, the clearance may be reduced to 4 ft. If the voltage is higher than 50kV, the clearance shall be increased 0.4 inch for every 1kV over that voltage.

(ii) If insulating barriers are installed to prevent contact with the lines, and if the barriers are rated for the voltage of the line being guarded and are not a part of or an attachment to the vehicle or its raised structure, the clearance may be reduced to a distance within the designed working dimensions of the insulating barrier.

(b) If the equipment is an aerial lift insulated for the voltage involved, and if the work is performed by a qualified person, the clearance (between the uninsulated portion of the aerial lift and the power line) may be reduced to the distance given in (a) through (d) of this subsection.

(c) Employees standing on the ground shall not contact the vehicle or mechanical equipment or any of its attachments, unless:

(i) The employee is using protective equipment rated for the voltage; or

(ii) The equipment is located so that no uninsulated part of its structure (that portion of the structure that provides a conductive path to employees on the ground) can come closer to the line than permitted in this section.

(d) If any vehicle or mechanical equipment capable of having parts of its structure elevated near energized overhead lines is of grounding shall not stand at the grounding location whenever there is a possibility of overhead line contact. Additional precautions, such as the use of barricades or insulation, shall be taken to protect employees from hazardous ground potentials, depending on earth resistivity and fault currents, which can develop within the first few feet or more outward from the grounding point.

(21) Illumination.

(a) Employees shall not enter spaces containing exposed energized parts, unless illumination is provided that enables the employees to perform the work safely.

(b) Where lack of illumination or an obstruction precludes observation of the work to be performed, employees shall not perform tasks near exposed energized parts. Employees shall not reach blindly into areas which may contain energized parts.

(22) Confined or enclosed space (such as a manhole or vault) that contains exposed energized parts, the employer shall provide, and the employee shall use, protective shields, protective barriers, or insulating materials as necessary to avoid inadvertent contact with these parts. Doors, hinged panels, and the like shall be secured to prevent their swinging into an employee and causing the employee to contact exposed energized parts.

(23) Conductive materials and equipment. Conductive materials and equipment that are in contact with any part of an employee's body shall be handled in a manner that will prevent them from contacting exposed energized conductors or circuit parts. If an employee handle long dimensional conductive objects (such as ducts and pipes) practices (such as the use of insulation, guarding, and material handling techniques) which will minimize the hazard.

(24) Portable ladders. Portable ladders shall have nonconductive siderails if they are used where the employee or the ladder could contact exposed energized parts.

(25) Conductive apparel. Conductive articles of jewelry and clothing (such as watch bands, bracelets, rings, key chains, necklaces, metalized aprons, cloth with conductive thread, or metal headgear) shall not be worn if they might contact exposed energized parts.

(26) Housekeeping duties.

(a) Where live parts present an electrical contact hazard, employees shall not perform housekeeping duties at such close distances to the parts that there is a possibility of contact, unless adequate safeguards (such as insulating equipment or barriers) are provided.

(b) Electrically conductive cleaning materials (including conductive solids such as steel wool, metalized cloth, and silicon carbide, as well as conductive liquid solutions) shall not be used in proximity to energized parts unless procedures are followed which will prevent electrical contact.

[Statutory Authority: Chapter 49.17 RCW. 94-15-096 (Order 94-07), § 296-155-428, filed 7/20/94, effective 9/20/94; 92-23-017 (Order 92-13), § 296-155-428, filed 11/10/92, effective 12/18/92; 88-11-021 (Order 88-04), § 296-155-428, filed 5/11/88.]

WAC 296-155-429 Lockout and tagging of circuits. (1) Controls. Controls that are deactivated during the course of work on energized or deenergized equipment or circuits shall be tagged and padlocked in the open position.

(2) Equipment and circuits. Equipment or circuits that are deenergized shall be rendered inoperative and have tags and locked padlocks attached at all points where such equipment or circuits can be energized.

(3) Tags. Tags shall be placed to identify plainly the equipment or circuits being worked on.

(4) Lockout and tagging. While any employee is exposed to contact with parts of fixed electric equipment or circuits which have been deenergized, the circuits energizing the

parts shall be locked out or tagged or both according to the requirements of this section. The requirements shall be followed in the order in which they are presented (i.e., (a) of this subsection first, then (b) of this subsection).

Note 1: As used in this section, fixed equipment refers to equipment fastened in connected by permanent wiring methods.

Note 2: Lockout and tagging procedures that comply with chapter 296-803 WAC will also be deemed to comply with this subsection provided that:
1. The procedures address the electrical safety hazards covered by this part; and
2. The procedures also incorporate the requirements of (c)(iv) and (d)(ii) of this subsection.

(a) Procedures. The employer shall maintain a written copy of the procedures outlined in this subsection and shall make it available for inspection by employees and by the director and his/her authorized representative.

Note: The written procedures may be in the form of a copy of this section, WAC 296-155-429.

(b) Deenergizing equipment.

(i) Safe procedures for deenergizing circuits and equipment shall be determined before circuits or equipment are deenergized.

(ii) The circuits and equipment to be worked on shall be disconnected from all electric energy sources. Control circuit devices, such as push buttons, selector switches, and interlocks, shall not be used as the sole means for deenergizing circuits or equipment. Interlocks for electric equipment shall not be used as a substitute for lockout and tagging procedures.

(iii) Stored electric energy which might endanger personnel shall be released. Capacitors shall be discharged and high capacitance elements shall be short-circuited and grounded, if the stored electric energy might endanger personnel.

Note: If the capacitors or associated equipment are handled in meeting this requirement, they shall be treated as energized.

(iv) Stored nonelectrical energy in devices that could reenergize electric circuit parts shall be blocked or relieved to the extent that the circuit parts could not be accidentally energized by the device.

(c) Application of locks and tags.

(i) A lock and a tag shall be placed on each disconnecting means used to deenergize circuits and equipment on which work is to be performed, except as provided in (c)(iii) and (v) of this subsection. The lock shall be attached to prevent persons from operating the disconnecting means unless they resort to undue force or the use of tools.

(ii) Each tag shall contain a statement prohibiting unauthorized operation of the disconnecting means and removal of the tag.

(iii) If a lock cannot be applied, or if the employer can demonstrate that tagging procedures will provide a level of safety equivalent to that obtained by the use of a lock, a tag may be used without a lock.

(iv) A tag used without a lock, as permitted by item (iii) of this subsection, shall be supplemented by at least one additional safety measure that provides a level of safety equivalent to that obtained by the use of a lock. Examples of additional safety measures include the removal of an isolating circuit element, blocking of a controlling switch, or opening of an extra disconnecting device.

(v) A lock may be placed without a tag only under the following conditions:

(A) Only one circuit or piece of equipment is deenergized; and

(B) The lockout period does not extend beyond the work shifts; and

(C) Employees exposed to the hazards associated with reenergizing the circuit or equipment are familiar with this procedure.

(d) Verification of deenergized condition. The requirements of this subsection shall be met before any circuits or equipment can be considered and worked as deenergized.

(i) A qualified person shall operate the equipment operating controls or otherwise verify that the equipment cannot be restarted.

(ii) A qualified person shall use test equipment to test the circuit elements and electrical parts of equipment to which employees will be exposed and shall verify that the circuit elements and equipment parts are deenergized. The test shall also determine if any energized conditions exists as a result of inadvertently induced voltage or unrelated voltage backfeed even though specific parts of the circuit have been deenergized and presumed to be safe. If the circuit to be tested is over 600 volts, nominal, the test equipment shall be checked for proper operation immediately before and immediately after this test.

(e) Reenergizing equipment. These requirements shall be met, in the order given, before circuits or equipment are reenergized, even temporarily.

(i) A qualified person shall conduct tests and visual inspections, as necessary, to verify that all tools, electrical jumpers, shorts, grounds, and other such devices have been removed, so that the circuits and equipment can be safely energized.

(ii) Employees exposed to the hazards associated with reenergizing the circuit or equipment shall be warned to stay clear of circuits and equipment.

(iii) Each lock and tag shall be removed by the employee who applied it or under his or her direct supervision. However, if this employee is absent from the work place, then the lock or tag may be removed by a qualified person designated to perform this task provided that:

(A) The employer ensures that the employee who applied the lock or tag is not available at the work place; and

(B) The employer ensures that the employee is aware that the lock or tag has been removed before he or she resumes work at that work place.

(iv) There shall be a visual determination that all employees are clear of the circuits and equipment.

[Statutory Authority: RCW 49.17.010, 49.17.040, 49.17.050, and 49.17.060. 04-15-105, § 296-155-429, filed 7/20/04, effective 11/1/04. Statutory Authority: Chapter 49.17 RCW. 96-17-056, § 296-155-429, filed 8/20/96, effective 10/15/96; 94-15-096 (Order 94-07), § 296-155-429, filed 7/20/94, effective 9/20/94; 88-11-021 (Order 88-04), § 296-155-429, filed 5/11/88.]

WAC 296-155-432 Maintenance of equipment. The employer shall ensure that all wiring components and utilization equipment in hazardous locations are maintained in a

dust-tight, dust-ignition-proof, or explosion-proof condition, as appropriate. There shall be no loose or missing screws, gaskets, threaded connections, seals, or other impairments to a tight condition.

[Statutory Authority: Chapter 49.17 RCW. 88-11-021 (Order 88-04), § 296-155-432, filed 5/11/88.]

WAC 296-155-434 Environmental deterioration of equipment. (1) Deteriorating agents.

(a) Unless identified for use in the operating environment, no conductors or equipment shall be located:

(i) In damp or wet locations;

(ii) Where exposed to gases, fumes, vapors, liquids, or other agents having a deteriorating effect on the conductors or equipment; or

(iii) Where exposed to excessive temperatures.

(b) Control equipment, utilization equipment, and busways approved for use in dry locations only shall be protected against damage from the weather during building construction.

(2) Protection against corrosion. Metal raceways, cable armor, boxes, cable sheathing, cabinets, elbows, couplings, fittings, supports, and support hardware shall be of materials appropriate for the environment in which they are to be installed.

[Statutory Authority: Chapter 49.17 RCW. 88-11-021 (Order 88-04), § 296-155-434, filed 5/11/88.]

WAC 296-155-437 Batteries and battery charging. (1) General requirements.

(a) Batteries of the unsealed type shall be located in enclosures with outside vents or in well ventilated rooms and shall be arranged so as to prevent the escape of fumes, gases, or electrolyte spray into other areas.

(b) Ventilation shall be provided to ensure diffusion of the gases from the battery and to prevent the accumulation of an explosive mixture.

(c) Racks and trays shall be substantial and shall be treated to make them resistant to the electrolyte.

(d) Floors shall be of acid resistant construction unless protected from acid accumulations.

(e) Face shields, aprons, and rubber gloves shall be provided for and worn by workers handling acids or batteries.

(f) Facilities for quick drenching of the eyes and body shall be provided within 25 feet (7.62 m) of battery handling areas.

(g) Facilities shall be provided for flushing and neutralizing spilled electrolyte and for fire protection.

(2) Charging.

(a) Battery charging installations shall be located in areas designated for that purpose.

(b) Charging apparatus shall be protected from damage by trucks.

(c) When batteries are being charged, the vent caps shall be kept in place to avoid electrolyte spray. Vent caps shall be maintained in functioning condition.

[Statutory Authority: Chapter 49.17 RCW. 88-11-021 (Order 88-04), § 296-155-437, filed 5/11/88.]

WAC 296-155-441 Applicability. (1) Covered. WAC 296-155-441 through 296-155-459 contain installation safety requirements for electrical equipment and installations used to provide electric power and light at the jobsite. These sections apply to installations, both temporary and permanent, used on the jobsite; but these sections do not apply to existing permanent installations that were in place before the construction activity commenced.

Note: If the electrical installation is made in accordance with the National Electrical Code ANSI/NFPA 70-1984, exclusive of formal interpretations and tentative interim amendments, it will be deemed to be in compliance with WAC 296-155-444 through 296-155-459, except for WAC 296-155-447 (2)(a) and 296-155-449 (1)(b)(ii)(E), (F), (G), and (J).

(2) Not covered. WAC 296-155-441 through 296-155-459 do not cover installations used for the generation, transmission, and distribution of electric energy, including related communication, metering, control, and transformation installations. (However, these regulations do cover portable and vehicle-mounted generators used to provide power for equipment used at the jobsite.) See the National Electrical Safety Code (NESC).

[Statutory Authority: RCW 49.17.010, [49.17].040, [49.17].050. 02-12-098, § 296-155-441, filed 6/5/02, effective 8/1/02. Statutory Authority: Chapter 49.17 RCW. 88-11-021 (Order 88-04), § 296-155-441, filed 5/11/88.]

WAC 296-155-444 General requirements. (1) Approval. All electrical conductors and equipment shall be approved.

(2) Examination, installation, and use of equipment.

(a) Examination. The employer shall ensure that electrical equipment is free from recognized hazards that are likely to cause death or serious physical harm to employees. Safety of equipment shall be determined on the basis of the following considerations:

(i) Suitability for installation and use in conformity with the provisions of this part. Suitability of equipment for an identified purpose may be evidenced by listing, labeling, or certification for that identified purpose.

(ii) Mechanical strength and durability, including, for parts designed to enclose and protect other equipment, the adequacy of the protection thus provided.

(iii) Electrical insulation.

(iv) Heating effects under conditions of use.

(v) Arcing effects.

(vi) Classification by type, size, voltage, current capacity, specific use.

(vii) Other factors which contribute to the practical safeguarding of employees using or likely to come in contact with the equipment.

(b) Installation and use. Listed, labeled, or certified equipment shall be installed and used in accordance with instructions included in the listing, labeling, or certification.

(3) Interrupting rating. Equipment intended to break current shall have an interrupting rating at system voltage sufficient for the current that must be interrupted.

(4) Mounting and cooling of equipment.

(a) Mounting. Electric equipment shall be firmly secured to the surface on which it is mounted. Wooden plugs driven into holes in masonry, concrete, plaster, or similar materials shall not be used.

(b) Cooling. Electrical equipment which depends upon the natural circulation of air and convection principles for cooling of exposed surfaces shall be installed so that room air flow over such surfaces is not prevented by walls or by adjacent installed equipment. For equipment designed for floor mounting, clearance between top surfaces and adjacent surfaces shall be provided to dissipate rising warm air. Electrical equipment provided with ventilating openings shall be installed so that walls or other obstructions do not prevent the free circulation of air through the equipment.

(5) Splices. Conductors shall be spliced or joined with splicing devices designed for the use or by brazing, welding, or soldering with a fusible metal or alloy. Soldered splices shall first be so spliced or joined as to be mechanically and electrically secure without solder and then soldered. All splices and joints and the free ends of conductors shall be covered with an insulation equivalent to that of the conductors or with an insulating device designed for the purpose.

(6) Arcing parts. Parts of electric equipment which in ordinary operation produce arcs, sparks, flames, or molten metal shall be enclosed or separated and isolated from all combustible material.

(7) Marking. Electrical equipment shall not be used unless the manufacturer's name, trademark, or other descriptive marking by which the organization responsible for the product may be identified is placed on the equipment and unless other markings are provided giving voltage, current, wattage, or other ratings as necessary. The marking shall be of sufficient durability to withstand the environment involved.

(8) Identification of disconnecting means and circuits. Each disconnecting means required by this part for motors and appliances shall be legibly marked to indicate its purpose, unless located and arranged so the purpose is evident. Each service, feeder, and branch circuit, at its disconnecting means or overcurrent device, shall be legibly marked to indicate its purpose, unless located and arranged so the purpose is evident. These markings shall be of sufficient durability to withstand the environment involved.

(9) Construction site. Precautions shall be taken to make any necessary open wiring inaccessible to unauthorized personnel.

(10) 600 volts, nominal, or less. This subsection applies to equipment operating at 600 volts, nominal, or less.

(a) Working space about electric equipment. Sufficient access and working space shall be provided and maintained about all electric equipment to permit ready and safe operation and maintenance of such equipment.

(i) Working clearances. Except as required or permitted elsewhere in this part, the dimension of the working space in the direction of access to live parts operating at 600 volts or less and likely to require examination, adjustment, servicing, or maintenance while alive shall not be less than indicated in Table I-1. In addition to the dimensions shown in Table I-1, workspace shall not be less than 30 inches (762 mm) wide in front of the electric equipment. Distances shall be measured from the live parts if they are exposed, or from the enclosure front or opening if the live parts are enclosed. Walls constructed of concrete, brick, or tile are considered to be grounded. Working space is not required in back of assemblies such as dead-front switchboards or motor control centers where there are no renewable or adjustable parts such as fuses or switches on the back and where all connections are accessible from locations other than the back.

Table I-1
Working Clearances

Nominal Voltage to Ground	Minimum Clear Distance for Conditions [1] (a)	(b)	(c)
	Feet [2]	Feet [2]	Feet [2]
0-150	3	3	3
151-600	3	3 1/2	4

[1] Conditions (a), (b), and (c) are as follows: (a) Exposed live parts on one side and no live or grounded parts on the other side of the working space, or exposed live parts on both sides effectively guarded by insulating material. Insulated wire or insulated busbars operating at not over 300 volts are not considered live parts. (b) Exposed live parts on one side and grounded parts on the other side. (c) Exposed live parts on both sides of the workspace not guarded provided in condition (a) with the operator between.

[2] Note: For International System of Units (S1): One foot=0.3048m.

(ii) Clear spaces. Working space required by this part shall not be used for storage. When normally enclosed live parts are exposed for inspection or servicing, the working space, if in a passageway or general open space, shall be guarded.

(iii) Access and entrance to working space. At least one entrance shall be provided to give access to the working space about electric equipment.

(iv) Front working space. Where there are live parts normally exposed on the front of switchboards or motor control centers, the working space in front of such equipment shall not be less than 3 feet (914 mm).

(v) Headroom. The minimum headroom of working spaces about service equipment, switchboards, panelboards, or motor control centers shall be 6 feet 3 inches (1.91 m).

(b) Guarding of live parts.

(i) Except as required or permitted elsewhere in this part, live parts of electric equipment operating at 50 volts or more shall be guarded against accidental contact by cabinets or other forms of enclosures, or by any of the following means:

(A) By location in a room, vault, or similar enclosure that is accessible only to qualified persons.

(B) By partitions or screens so arranged that only qualified persons will have access to the space within reach of the live parts. Any openings in such partitions or screens shall be so sized and located that persons are not likely to come into accidental contact with the live parts or to bring conducting objects into contact with them.

(C) By location on a balcony, gallery, or platform so elevated and arranged as to exclude unqualified persons.

(D) By elevation of 8 feet (2.44 m) or more above the floor or other working surface and so installed as to exclude unqualified persons.

(ii) In locations where electric equipment would be exposed to physical damage, enclosures or guards shall be so arranged and of such strength as to prevent such damage.

(iii) Entrances to rooms and other guarded locations containing exposed live parts shall be marked with conspicuous warning signs forbidding unqualified persons to enter.

(11) Over 600 volts, nominal.

(a) General. Conductors and equipment used on circuits exceeding 600 volts, nominal, shall comply with all applica-

ble provisions of subsections (1) through (7) of this section and with the following provisions which supplement or modify those requirements. The provisions of (b), (c), and (d) of this subsection do not apply to equipment on the supply side of the service conductors.

(b) Enclosure for electrical installations. Electrical installations in a vault, room, closet or in an area surrounded by a wall, screen, or fence, access to which is controlled by lock and key or other equivalent means, are considered to be accessible to qualified persons only. A wall, screen, or fence less than 8 feet (2.44 m) in height is not considered adequate to prevent access unless it has other features that provide a degree of isolation equivalent to an 8 foot (2.44 m) fence. The entrances to all buildings, rooms or enclosures containing exposed live parts or exposed conductors operating at over 600 volts, nominal, shall be kept locked or shall be under the observation of a qualified person at all times.

(i) Installations accessible to qualified persons only. Electrical installations having exposed live parts shall be accessible to qualified persons only and shall comply with the applicable provisions of (c) of this subsection.

(ii) Installations accessible to unqualified persons. Electrical installations that are open to unqualified persons shall be made with metal-enclosed equipment or shall be enclosed in a vault or in an area, access to which is controlled by a lock. Metal-enclosed switchgear, unit substations, transformers, pull boxes, connection boxes, and other similar associated equipment shall be marked with appropriate caution signs. If equipment is exposed to physical damage from vehicular traffic, guards shall be provided to prevent such damage. Ventilating or similar openings in metal-enclosed equipment shall be designed so that foreign objects inserted through these openings will be deflected from energized parts.

(c) Workspace about equipment. Sufficient space shall be provided and maintained about electric equipment to permit ready and safe operation and maintenance of such equipment. Where energized parts are exposed, the minimum clear workspace shall not be less than 6 feet 6 inches (1.98 m) high (measured vertically from the floor or platform,) or less than 3 feet (914 mm) wide (measured parallel to the equipment.) The depth shall be as required in Table I-2. The workspace shall be adequate to permit at least a ninety degree opening of doors or hinged panels.

(i) Working space. The minimum clear working space in front of electric equipment such as switchboards, control panels, switches, circuit breakers, motor controllers, relays, and similar equipment shall not be less than specified in Table I-2 unless otherwise specified in this part. Distances shall be measured from the live parts if they are exposed, or from the enclosure front or opening if the live parts are enclosed. However, working space is not required in back of equipment such as deadfront switchboards or control assemblies where there are no renewable or adjustable parts (such as fuses or switches) on the back and where all connections are accessible from locations other than the back. Where rear access is required to work on de-energized parts on the back of enclosed equipment, a minimum working space of 30 inches (762 mm) horizontally shall be provided.

Table I-2
Minimum Depth of Clear Working
Space in Front of electric Equipment

Nominal Voltage to Ground	Minimum Clear Distance for Conditions [1] (a)	(b)	(c)
	Feet [2]	Feet [2]	Feet [2]
601 to 2,500	3	4	5
2,501 to 9,000	4	5	6
9,001 to 25,000	5	6	9
25,001 to 75kV	6	8	10
Above 75kV	8	10	12

[1] Conditions (a), (b), and (c) are as follows: (a) Exposed live parts on one side and no live or grounded parts on the other side of the working space, or exposed live parts on both sides effectively guarded by insulating materials. Insulated wire or insulated busbars operating at not over 300 volts are not considered live parts. (b) Exposed live parts on one side and grounded parts on the other side. Walls constructed of concrete, brick, or the tile are considered to be grounded surfaces. (c) Exposed live parts on both sides of the workspace (not guarded as provided in Condition (a)) with the operator between.

[2] Note: For S1 units: One foot = 0.3048m.

(ii) Lighting outlets and points of control. The lighting outlets shall be so arranged that persons changing lamps or making repairs on the lighting system will not be endangered by live parts or other equipment. The points of control shall be so located that persons are not likely to come in contact with any live part or moving part of the equipment while turning on the lights.

(iii) Elevation of unguarded live parts. Unguarded live parts above working space shall be maintained at elevations not less than specified in Table I-3.

Table I-3
Elevation of Unguarded
Energized Parts Above Working Space

Nominal Voltage to Between Phases	Minimum Elevation
601 to 7,500	8 feet 6 inches[1]
7,501 to 35,000	9 feet
Over 35kV	9 feet + 0.37 inches per kV above 35kV

[1] Note: For S1 units: One inch = 25.4mm, one foot = 0.3048m.

(d) Entrance and access to workspace. At least one entrance not less than 24 inches (610 mm) wide and 6 feet 6 inches (1.98 m) high shall be provided to give access to the working space about electric equipment. On switchboard and control panels exceeding 48 inches (1.22 m) in width, there shall be one entrance at each end of such board where practicable. Where bare energized parts at any voltage or insulated energized parts above 600 volts are located adjacent to such entrance, they shall be guarded.

(12) Welding and cutting equipment. Welding and cutting equipment shall meet the requirements specified in Parts D and H of this chapter.

[Statutory Authority: Chapter 49.17 RCW. 93-19-142 (Order 93-04), § 296-155-444, filed 9/22/93, effective 11/1/93; 92-23-017 (Order 92-13), § 296-155-444, filed 11/10/92, effective 12/18/92; 88-11-021 (Order 88-04), § 296-155-444, filed 5/11/88.]

WAC 296-155-447 Wiring design and protection. (1) Use and identification of grounded and grounding conductors.

(a) Identification of conductors. A conductor used as a grounded conductor shall be identifiable and distinguishable

from all other conductors. A conductor used as an equipment grounding conductor shall be identifiable and distinguishable from all other conductors.

(b) Polarity of connections. No grounded conductor shall be attached to any terminal or lead so as to reverse designated polarity.

(c) Use of grounding terminals and devices. A grounding terminal or grounding-type device on a receptacle, cord connector, or attachment plug shall not be used for purposes other than grounding.

(2) Branch circuits.

(a) Ground-fault protection.

(i) General. The employer shall use either ground-fault circuit interrupters as specified in (a)(ii) of this subsection or an assured equipment grounding conductor program as specified in (a)(iii) of this subsection to protect employees on construction sites. These requirements are in addition to any other requirements for equipment grounding conductors.

(ii) Ground-fault circuit interrupters. All 120-volt, single-phase, 15-ampere and 20-ampere receptacle outlets on construction sites, which are not a part of the permanent wiring of the building or structure and which are in use by employees, shall have approved ground-fault circuit interrupters for personnel protection. Receptacles on a two-wire, single-phase portable or vehicle-mounted generator rated not more than 5kW, where the circuit conductors of the generator are insulated from the generator frame and all other grounded surfaces, need not be protected with ground-fault circuit interrupters.

(iii) Assured equipment grounding conductor program. The employer shall establish and implement an assured equipment grounding conductor program on construction sites covering all cord sets, receptacles which are not a part of the building or structure, and equipment connected by cord and plug which are available for use or used by employees. This program shall comply with the following minimum requirements:

(A) A written description of the program, including the specific procedures adopted by the employer, shall be available at the jobsite for inspection and copying by the director and any affected employee.

(B) The employer shall designate one or more competent persons (as defined in WAC 296-155-012(4)) to implement the program, and to perform continuing tests and inspections as required.

(C) Each cord set, attachment cap, plug and receptacle of cord sets, and any equipment connected by cord and plug, except cord sets and receptacles which are fixed and not exposed to damage, shall be visually inspected before each day's use for external defects, such as deformed or missing pins or insulation damage, and for indications of possible internal damage. Equipment found damaged or defective shall not be used until repaired.

(D) The following tests shall be performed on all cord sets, receptacles which are not a part of the permanent wiring of the building or structure, and cord-connected and plug-connected equipment required to be grounded:

(I) All equipment grounding conductors shall be tested for continuity and shall be electrically continuous.

(II) Each receptacle and attachment cap or plug shall be tested for correct attachment of the equipment grounding conductor. The equipment grounding conductor shall be connected to its proper terminal.

(III) Each outlet receptacle, or power source shall be tested to ensure proper polarity.

(E) All required tests shall be performed:

(I) Before first use;

(II) Before equipment is returned to service following any repairs;

(III) Before equipment is used after any incident which can be reasonably suspected to have caused damage (for example, when a cord set is run over); and

(IV) At intervals not to exceed 3 months, except that cord sets and receptacles which are fixed and not exposed to damage shall be tested at intervals not exceeding 6 months.

(F) The employer shall not make available or permit the use by employees of any equipment which has not met the requirements of (a)(iii) of this subsection.

(G) Tests performed as required in this subsection shall be recorded. This test record shall identify each receptacle, cord set, and cord-connected and plug-connected equipment that passed the test and shall indicate the last date it was tested or the interval for which it was tested. This record shall be kept by means of logs, color coding, or other effective means and shall be maintained until replaced by a more current record. The record shall be made available on the jobsite for inspection by the director and any affected employee.

(b) Outlet devices. Outlet devices shall have an ampere rating not less than the load to be served and shall comply with the following:

(i) Single receptacles. A single receptacle installed on an individual branch circuit shall have an ampere rating of not less than that of the branch circuit.

(ii) Two or more receptacles. Where connected to a branch circuit supplying two or more receptacles or outlets, receptacle ratings shall conform to the values listed in Table I-4.

(iii) Receptacles used for the connection of motors. The rating of an attachment plug or receptacle used for cord-connection and plug-connection of a motor to a branch circuit shall not exceed 15 amperes at 125 volts or 10 amperes at 250 volts if individual overload protection is omitted.

Table I-4
Receptacle Ratings for Various Size Circuits

Circuit Rating Amperes	Receptacle Rating Amperes
15	Not Over 15
20	15 or 20
30	30
40	40 or 50
50	50

(3) Outside conductors and lamps.

(a) 600 volts, nominal, or less. (a)(i) through (iv)(D) of this subsection apply to branch circuit, feeder, and service conductors rated 600 volts, nominal, or less and run outdoors as open conductors.

(i) Conductors on poles. Conductors supported on poles shall provide a horizontal climbing space not less than the following:

(A) Power conductors below communication conductors: 30 inches (762 mm).

(B) Power conductors alone or above communication conductors: 300 volts or less—24 inches (610 mm); more than 300 volts—30 inches (762 mm).

(C) Communication conductors below power conductors: With power conductors 300 volts or less—24 inches (610 mm); more than 300 volts—30 inches (762 mm).

(ii) Clearance from ground. Open conductors shall conform to the following minimum clearances:

(A) 10 feet (3.05 m)—above finished grade, sidewalks, or from any platform or projection from which they might be reached.

(B) 12 feet (3.66 m)—over areas subject to vehicular traffic other than truck traffic.

(C) 15 feet (4.57 m)—over areas other than those specified in (a)(ii)(D) of this subsection that are subject to truck traffic.

(D) 18 feet (5.49 m)—over public streets, alleys, roads, and driveways.

(iii) Clearance from building openings. Conductors shall have a clearance of at least 3 feet (914 mm) from windows, doors, fire escapes, or similar locations. Conductors run above the top level of a window are considered to be out of reach from that window and, therefore, do not have to be 3 feet (914 mm) away.

(iv) Clearance over roofs. Conductors above roof space accessible to employees on foot shall have a clearance from the highest point of the roof surface of not less than 8 feet (2.44 m) vertical clearance for insulated conductors, not less than 10 feet (3.05 m) vertical or diagonal clearance for covered conductors, and not less than 15 feet (4.57 m) for bare conductors, except that:

(A) Where the roof space is also accessible to vehicular traffic, the vertical clearance shall not be less than 18 feet (5.49 m); or

(B) Where the roof space is not normally accessible to employees on foot, fully insulated conductors shall have a vertical or diagonal clearance of not less than 3 feet (914 mm); or

(C) Where the voltage between conductors is 300 volts or less and the roof has a slope of not less than 4 inches (102 mm) in 12 inches (305 mm), the clearance from roofs shall be at least 3 feet (914 mm); or

(D) Where the voltage between conductors is 300 volts or less and the conductors do not pass over more than 4 feet (1.22 m) of the overhang portion of the roof and they are terminated at a through-the-roof raceway or support, the clearance from roofs shall be at least 18 inches (457 mm).

(b) Location of outdoor lamps. Lamps for outdoor lighting shall be located below all live conductors, transformers, or other electric equipment, unless such equipment is controlled by a disconnecting means that can be locked in the open position or unless adequate clearances or other safeguards are provided for relamping operations.

(4) Services.

(a) Disconnecting means.

(i) General. Means shall be provided to disconnect all conductors in a building or other structure from the service-entrance conductors. The disconnecting means shall plainly indicate whether it is in the open or closed position and shall be installed at a readily accessible location nearest the point of entrance of the service-entrance conductors.

(ii) Simultaneous opening of poles. Each service disconnecting means shall simultaneously disconnect all ungrounded conductors.

(b) Services over 600 volts, nominal. The following additional requirements apply to services over 600 volts, nominal.

(i) Guarding. Service-entrance conductors installed as open wires shall be guarded to make them accessible only to qualified persons.

(ii) Warning signs. Signs warning of high voltage shall be posted where unauthorized employees might come in contact with live parts.

(5) Overcurrent protection.

(a) 600 volts, nominal, or less. The following requirements apply to overcurrent protection of circuits rated 600 volts, nominal, or less.

(i) Protection of conductors and equipment. Conductors and equipment shall be protected from overcurrent in accordance with their ability to safely conduct current. Conductors shall have sufficient ampacity to carry the load.

(ii) Grounded conductors. Except for motor-running overload protection, overcurrent devices shall not interrupt the continuity of the grounded conductor unless all conductors of the circuit are opened simultaneously.

(iii) Disconnection of fuses and thermal cutouts. Except for devices provided for current-limiting on the supply side of the service disconnecting means, all cartridge fuses which are accessible to other than qualified persons and all fuses and thermal cutouts on circuits over 150 volts to ground shall be provided with disconnecting means. This disconnecting means shall be installed so that the fuse or thermal cutout can be disconnected from its supply without disrupting service to equipment and circuits unrelated to those protected by the overcurrent device.

(iv) Location in or on premises. Overcurrent devices shall be readily accessible. Overcurrent devices shall not be located where they could create an employee safety hazard by being exposed to physical damage or located in the vicinity of easily ignitible material.

(v) Arcing or suddenly moving parts. Fuses and circuit breakers shall be so located or shielded that employees will not be burned or otherwise injured by their operation.

(vi) Circuit breakers.

(A) Circuit breakers shall clearly indicate whether they are in the open (off) or closed (on) position.

(B) Where circuit breaker handles on switchboards are operated vertically rather than horizontally or rotationally, the up position of the handle shall be the closed (on) position.

(C) If used as switches in 120-volt, fluorescent lighting circuits, circuit breakers shall be marked "SWD."

(b) Over 600 volts, nominal. Feeders and branch circuits over 600 volts, nominal, shall have short-circuit protection.

(6) Effective grounding. The path from circuits, equipment, structures, and conduit or enclosures to ground shall be permanent and continuous; have ample carrying capacity to conduct safely the currents liable to be imposed on it; and have the impedance sufficiently low to limit the potential above ground and to result in the operation of the overcurrent devices in the circuit. (a) through (k) of this subsection con-

tain grounding requirements for systems, circuits, and equipment.

(a) Systems to be grounded. The following systems which supply premises wiring shall be grounded:

(i) Three-wire DC systems. All three-wire DC systems shall have their neutral conductor grounded.

(ii) Two-wire DC systems. Two-wire DC systems operating at over 50 volts through 300 volts between conductors shall be grounded unless they are rectifier-derived from an AC system complying with (a)(iii), (iv), and (v) of this subsection.

(iii) AC circuits, less than 50 volts. AC circuits of less than 50 volts shall be grounded if they are installed as overhead conductors outside of buildings or if they are supplied by transformers and the transformer primary supply system is ungrounded or exceeds 150 volts to ground.

(iv) AC systems, 50 volts to 1000 volts. AC systems of 50 volts to 1000 volts shall be grounded under any of the following conditions, unless exempted by (a)(v) of this subsection:

(A) If the system can be so grounded that the maximum voltage to ground on the ungrounded conductors does not exceed 150 volts;

(B) If the system is nominally rated 480Y/277 volt, 3-phase, 4-wire in which the neutral is used as a circuit conductor;

(C) If the system is nominally rated 240/120 volt, 3-phase, 4-wire in which the midpoint of one phase is used as a circuit conductor; or

(D) If a service conductor is uninsulated.

(v) Exceptions. AC systems of 50 volts to 1000 volts are not required to be grounded if the system is separately derived and is supplied by a transformer that has a primary voltage rating less than 1000 volts, provided all of the following conditions are met:

(A) The system is used exclusively for control circuits;

(B) The conditions of maintenance and supervision assure that only qualified persons will service the installation;

(C) Continuity of control power is required; and

(D) Ground detectors are installed on the control system.

(b) Separately derived systems. Where (a) of this subsection requires grounding of wiring systems whose power is derived from generator, transformer, or converter windings and has no direct electrical connection, including a solidly connected grounded circuit conductor, to supply conductors originating in another system, (e) of this subsection shall also apply.

(c) Portable and vehicle-mounted generators.

(i) Portable generators. Under the following conditions, the frame of a portable generator need not be grounded and may serve as the grounding electrode for a system supplied by the generator:

(A) The generator supplies only equipment mounted on the generator and/or cord-connected and plug-connected equipment through receptacles mounted on the generator; and

(B) The noncurrent-carrying metal parts of equipment and the equipment grounding conductor terminals of the receptacles are bonded to the generator frame.

(ii) Vehicle-mounted generators. Under the following conditions the frame of a vehicle may serve as the grounding electrode for a system supplied by a generator located on the vehicle:

(A) The frame of the generator is bonded to the vehicle frame; and

(B) The generator supplies only equipment located on the vehicle and/or cord-connected and plug-connected equipment through receptacles mounted on the vehicle or on the generator; and

(C) The noncurrent-carrying metal parts of equipment and the equipment grounding conductor terminals of the receptacles are bonded to the generator frame; and

(D) The system complies with all other provisions of this section.

(iii) Neutral conductor bonding. A neutral conductor shall be bonded to the generator frame if the generator is a component of a separately derived system. No other conductor need be bonded to the generator frame.

(d) Conductors to be grounded. For AC premises wiring systems the identified conductor shall be grounded.

(e) Grounding connections.

(i) Grounded system. For a grounded system, a grounding electrode conductor shall be used to connect both the equipment grounding conductor and the grounded circuit conductor to the grounding electrode. Both the equipment grounding conductor and the grounding electrode conductor shall be connected to the grounded circuit conductor on the supply side of the service disconnecting means, or on the supply side of the system disconnecting means or overcurrent devices if the system is separately derived.

(ii) Ungrounded systems. For an ungrounded service-supplied system, the equipment grounding conductor shall be connected to the grounding electrode conductor at the service equipment. For an ungrounded separately derived system, the equipment grounding conductor shall be connected to the grounding electrode conductor at, or ahead of, the system disconnecting means or overcurrent devices.

(f) Grounding path. The path to ground from circuits, equipment, and enclosures shall be permanent and continuous.

(g) Supports, enclosures, and equipment to be grounded.

(i) Supports and enclosures for conductors. Metal cable trays, metal raceways, and metal enclosures for conductors shall be grounded, except that:

(A) Metal enclosures such as sleeves that are used to protect cable assemblies from physical damage need not be grounded; and

(B) Metal enclosures for conductors added to existing installations of open wire, knob-and-tube wiring, and nonmetallic-sheathed cable need not be grounded if all of the following conditions are met:

(I) Runs are less than 25 feet (7.62 m);

(II) Enclosures are free from probable contact with ground, grounded metal, metal laths, or other conductive materials; and

(III) Enclosures are guarded against employee contact.

(ii) Service equipment enclosures. Metal enclosures for service equipment shall be grounded.

(iii) Fixed equipment. Exposed noncurrent-carrying metal parts of fixed equipment which may become energized shall be grounded under any of the following conditions:

(A) If within 8 feet (2.44 m) vertically or 5 feet (1.52 m) horizontally of ground or grounded metal objects and subject to employee contact.

(B) If located in a wet or damp location and subject to employee contact.

(C) If in electrical contact with metal.

(D) If in a hazardous (classified) location.

(E) If supplied by a metal-clad, metal-sheathed, or grounded metal raceway wiring method.

(F) If equipment operates with any terminal at over 150 volts to ground; however, the following need not be grounded:

(I) Enclosures for switches or circuit breakers used for other than service equipment and accessible to qualified persons only;

(II) Metal frames of electrically heated appliances which are permanently and effectively insulated from ground; and

(III) The cases of distribution apparatus such as transformers and capacitors mounted on wooden poles at a height exceeding 8 feet (2.44 m) above ground or grade level.

(iv) Equipment connected by cord and plug. Under any of the conditions described in (g)(iv) (A) through (C) of this subsection, exposed noncurrent-carrying metal parts of cord-connected and plug-connected equipment which may become energized shall be grounded:

(A) If in a hazardous (classified) location (see WAC 296-155-444).

(B) If operated at over 150 volts to ground, except for guarded motors and metal frames of electrically heated appliances if the appliance frames are permanently and effectively insulated from ground.

(C) If the equipment is one of the types listed in (g)(iv)(C)(I) through (V) of this subsection. However, even though the equipment may be one of these types, it need not be grounded if it is exempted by (g)(iv)(C)(VI) of this subsection.

(I) Hand held motor-operated tools;

(II) Cord-connected and plug-connected equipment used in damp or wet locations or by employees standing on the ground or on metal floors or working inside of metal tanks or boilers;

(III) Portable and mobile X-ray and associated equipment;

(IV) Tools likely to be used in wet and/or conductive locations; and

(V) Portable hand lamps.

(VI) Tools likely to be used in wet and/or conductive locations need not be grounded if supplied through an isolating transformer with an ungrounded secondary of not over 50 volts. Listed or labeled portable tools and appliances protected by a system of double insulation, or its equivalent, need not be grounded. If such a system is employed, the equipment shall be distinctively marked to indicate that the tool or appliance utilizes a system of double insulation.

(v) Nonelectrical equipment. The metal parts of the following nonelectrical equipment shall be grounded: Frames and tracks of electrically operated cranes; frames of nonelectrically driven elevator cars to which electric conductors are attached; hand-operated metal shifting ropes or cables of electric elevators, and metal partitions, grill work, and similar metal enclosures around equipment of over IkV between conductors.

(h) Methods of grounding equipment.

(i) With circuit conductors. Noncurrent-carrying metal parts of fixed equipment, if required to be grounded by this part, shall be grounded by an equipment grounding conductor which is contained within the same raceway, cable, or cord, or runs with or encloses the circuit conductors. For DC circuits only, the equipment grounding conductor may be run separately from the circuit conductors.

(ii) Grounding conductor. A conductor used for grounding fixed or movable equipment shall have capacity to conduct safely any fault current which may be imposed on it.

(iii) Equipment considered effectively grounded. Electric equipment is considered to be effectively grounded if it is secured to, and in electrical contact with, a metal rack or structure that is provided for its support and the metal rack or structure is grounded by the method specified for the noncurrent-carrying metal parts of fixed equipment in (h)(i) of this subsection. Metal car frames supported by metal hoisting cables attached to or running over metal sheaves or drums of grounded elevator machines are also considered to be effectively grounded.

(i) Bonding.

(i) If bonding conductors are used to assure electrical continuity, they shall have the capacity to conduct any fault current which may be imposed.

(ii) When attaching bonding and grounding clamps or clips, a secure and positive metal-to-metal contact shall be made. Such attachments shall be made before closures are opened and material movements are started and shall not be broken until after material movements are stopped and closures are made.

(j) Made electrodes. If made electrodes are used, they shall be free from nonconductive coatings, such as paint or enamel; and, if practicable, they shall be embedded below permanent moisture level. A single electrode consisting of a rod, pipe or plate which has a resistance to ground greater than 25 ohms shall be augmented by one additional electrode installed no closer than 6 feet (1.83 m) to the first electrode.

(k) Grounding of systems and circuits of 1000 volts and over (high voltage).

(i) General. If high voltage systems are grounded, they shall comply with all applicable provisions of (a) through (j) of this subsection as supplemented and modified by (k) of this subsection.

(ii) Grounding of systems supplying portable or mobile equipment. Systems supplying portable or mobile high voltage equipment, other than substations installed on a temporary basis, shall comply with the following:

(A) Portable and mobile high voltage equipment shall be supplied from a system having its neutral grounded through an impedance. If a delta-connected high voltage system is used to supply the equipment, a system neutral shall be derived.

(B) Exposed noncurrent-carrying metal parts of portable and mobile equipment shall be connected by an equipment grounding conductor to the point at which the system neutral impedance is grounded.

(C) Ground-fault detection and relaying shall be provided to automatically deenergize any high voltage system

component which has developed a ground fault. The continuity of the equipment grounding conductor shall be continuously monitored so as to de-energize automatically the high voltage feeder to the portable equipment upon loss of continuity of the equipment grounding conductor.

(D) The grounding electrode to which the portable or mobile equipment system neutral impedance is connected shall be isolated from and separated in the ground by at least 20 feet (6.1 m) from any other system or equipment grounding electrode, and there shall be no direct connection between the grounding electrodes, such as buried pipe, fence or like objects.

(iii) Grounding of equipment. All noncurrent-carrying metal parts of portable equipment and fixed equipment including their associated fences, housings, enclosures, and supporting structures shall be grounded. However, equipment which is guarded by location and isolated from ground need not be grounded. Additionally, pole-mounted distribution apparatus at a height exceeding 8 feet (2.44 m) above ground or grade level need not be grounded.

[Statutory Authority: Chapter 49.17 RCW. 93-19-142 (Order 93-04), § 296-155-447, filed 9/22/93, effective 11/1/93; 88-11-021 (Order 88-04), § 296-155-447, filed 5/11/88.]

WAC 296-155-449 Wiring methods, components, and equipment for general use. (1) Wiring methods. The provisions of this subsection do not apply to conductors which form an integral part of equipment such as motors, controllers, motor control centers and like equipment.

(a) General requirements.

(i) Electrical continuity of metal raceways and enclosures. Metal raceways, cable armor, and other metal enclosures for conductors shall be metallically joined together into a continuous electric conductor and shall be so connected to all boxes, fittings, and cabinets as to provide effective electrical continuity.

(ii) Wiring in ducts. No wiring systems of any type shall be installed in ducts used to transport dust, loose stock or flammable vapors. No wiring system of any type shall be installed in any duct used for vapor removal or in any shaft containing only such ducts.

(iii) Receptacles for attachment plugs shall be approved, concealed contact type with a contact for extending ground continuity and shall be so designed and constructed that the plug may be pulled out without leaving any live parts exposed to accidental contact. All temporary outlet boxes shall be of a type suitable for use in wet or damp locations.

(iv) Attachment plugs or other connectors supplying equipment at more than 300 volts shall be of the skirted type or otherwise so designed that arcs will be confined.

(b) Temporary wiring.

(i) Scope. The provisions of (b) of this subsection apply to temporary electrical power and lighting wiring methods which may be of a class less than would be required for a permanent installation. Except as specifically modified in (b) of this subsection, all other requirements of this part for permanent wiring shall apply to temporary wiring installations. Temporary wiring shall be removed immediately upon completion of construction or the purpose for which the wiring was installed.

(ii) General requirements for temporary wiring.

(A) Feeders shall originate in a distribution center. The conductors shall be run as multiconductor cord or cable assemblies or within raceways; or, where not subject to physical damage, they may be run as open conductors on insulators not more than 10 feet (3.05 m) apart.

(B) Branch circuits shall originate in a power outlet or panelboard. Conductors shall be run as multiconductor cord or cable assemblies or open conductors, or shall be run in raceways. All conductors shall be protected by overcurrent devices at their ampacity. Runs of open conductors shall be located where the conductors will not be subject to physical damage, and the conductors shall be fastened at intervals not exceeding 10 feet (3.05 m). No branch-circuit conductors shall be laid on the floor. Each branch circuit that supplies receptacles or fixed equipment shall contain a separate equipment grounding conductor if the branch circuit is run as open conductors.

(C) Receptacles shall be of the grounding type. Unless installed in a complete metallic raceway, each branch circuit shall contain a separate equipment grounding conductor, and all receptacles shall be electrically connected to the grounding conductor. Receptacles for uses other than temporary lighting shall not be installed on branch circuits which supply temporary lighting. Receptacles shall not be connected to the same ungrounded conductor of multiwire circuits which supply temporary lighting.

(D) Disconnecting switches or plug connectors shall be installed to permit the disconnection of all ungrounded conductors of each temporary circuit.

(E) All lamps for general illumination shall be protected from accidental contact or breakage. Metal-case sockets shall be grounded.

(F) Temporary lights shall be equipped with hard usage (S or SJ types) electric cords with connections and insulation maintained in safe condition. "Brewery" cord (type CBO or NB) may be substituted for hard usage cord provided it is protected from physical damages. Temporary lights shall not be suspended by their electric cords unless cords and lights are designed for this means of suspension. Splices shall retain the insulation, outer sheath properties, flexibility, and usage characteristics of the cord being spliced.

When pin-type connectors or lampholders are utilized, the area of perforations caused by lampholder removal shall be restored to the insulation capabilities of the cord.

(G) Portable electric lighting used in wet and/or other conductive locations, as for example, drums, tanks, and vessels, shall be operated at 12 volts or less. However, 120-volt lights may be used if protected by a ground-fault circuit interrupter.

(H) A box shall be used wherever a change is made to a raceway system or a cable system which is metal clad or metal sheathed.

(I) Flexible cords and cables shall be protected from damage. Sharp corners and projections shall be avoided. Flexible cords and cables may pass through doorways or other pinch points, if protection is provided to avoid damage.

(J) Extension cord sets used with portable electric tools and appliances shall be of three-wire type and shall be designed for hard or extra-hard usage. Flexible cords used with temporary and portable lights shall be designed for hard or extra-hard usage.

Note: The National Electrical Code, ANSI/NFPA 70, in Article 400, Table 400-4, lists various types of flexible cords, some of which are noted as being designed for hard or extra-hard usage. Examples of these types of flexible cords include hard service cord (types S, ST, SO, STO) and junior hard service cord (types SJ, SJO, SJT, SJTO).

(iii) Guarding. For temporary wiring over 600 volts, nominal, fencing, barriers, or other effective means shall be provided to prevent access of other than authorized and qualified personnel.

(2) Cabinets, boxes, and fittings.

(a) Conductors entering boxes, cabinets, or fittings. Conductors entering boxes, cabinets, or fittings shall be protected from abrasion, and openings through which conductors enter shall be effectively closed. Unused openings in cabinets, boxes, and fittings shall also be effectively closed.

(b) Covers and canopies. All pull boxes, junction boxes, and fittings shall be provided with covers. If metal covers are used, they shall be grounded. In energized installations each outlet box shall have a cover, faceplate, or fixture canopy. Covers of outlet boxes having holes through which flexible cord pendants pass shall be provided with bushings designed for the purpose or shall have smooth, well-rounded surfaces on which the cords may bear.

(c) Pull and junction boxes for systems over 600 volts, nominal. In addition to other requirements in this section for pull and junction boxes, the following shall apply to these boxes for systems over 600 volts, nominal:

(i) Complete enclosure. Boxes shall provide a complete enclosure for the contained conductors or cables.

(ii) Covers. Boxes shall be closed by covers securely fastened in place. Underground box covers that weigh over 100 pounds (43.6 kg) meet this requirement. Covers for boxes shall be permanently marked "HIGH VOLTAGE." The marking shall be on the outside of the box cover and shall be readily visible and legible.

(3) Knife switches. Single-throw knife switches shall be so connected that the blades are dead when the switch is in the open position. Single-throw knife switches shall be so placed that gravity will not tend to close them. Single-throw knife switches approved for use in the inverted position shall be provided with a locking device that will ensure that the blades remain in the open position when so set. Double-throw knife switches may be mounted so that the throw will be either vertical or horizontal. However, if the throw is vertical, a locking device shall be provided to ensure that the blades remain in the open position when so set.

(4) Switchboards and panelboards. Switchboards that have any exposed live parts shall be located in permanently dry locations and accessible only to qualified persons. Panelboards shall be mounted in cabinets, cutout boxes, or enclosures designed for the purpose and shall be dead front. However, panelboards other than the dead front externally-operable type are permitted where accessible only to qualified persons. Exposed blades of knife switches shall be dead when open.

(5) Enclosures for damp or wet locations.

(a) Cabinets, fittings, and boxes. Cabinets, cutout boxes, fittings, boxes, and panelboard enclosures in damp or wet locations shall be installed so as to prevent moisture or water from entering and accumulating within the enclosures. In wet locations the enclosures shall be weatherproof.

(b) Switches and circuit breakers. Switches, circuit breakers, and switchboards installed in wet locations shall be enclosed in weatherproof enclosures.

(6) Conductors for general wiring. All conductors used for general wiring shall be insulated unless otherwise permitted in this part. The conductor insulation shall be of a type that is suitable for the voltage, operating temperature, and location of use. Insulated conductors shall be distinguishable by appropriate color or other means as being grounded conductors, ungrounded conductors, or equipment grounding conductors.

(7) Flexible cords and cables.

(a) Use of flexible cords and cables.

(i) Permitted uses. Flexible cords and cables shall be suitable for conditions of use and location. Flexible cords and cables shall be used only for:

(A) Pendants;

(B) Wiring of fixtures;

(C) Connection of portable lamps or appliances;

(D) Elevator cables;

(E) Wiring of cranes and hoists;

(F) Connection of stationary equipment to facilitate their frequent interchange;

(G) Prevention of the transmission of noise or vibration; or

(H) Appliances where the fastening means and mechanical connections are designed to permit removal for maintenance and repair.

(ii) Attachment plugs for cords. If used as permitted in (a)(i)(C), (F), or (H) of this subsection, the flexible cord shall be equipped with an attachment plug and shall be energized from a receptacle outlet.

(iii) Prohibited uses. Unless necessary for a use permitted in (a)(i) of this subsection, flexible cords and cables shall not be used:

(A) As a substitute for the fixed wiring of a structure;

(B) Where run through holes in walls, ceilings, or floors;

(C) Where run through doorways, windows, or similar openings, except as permitted in subsection (1)(b)(ii)(I) of this section;

(D) Where attached to building surfaces; or

(E) Where concealed behind building walls, ceilings, or floors.

(b) Identification, splices, and terminations.

(i) Identification. A conductor of a flexible cord or cable that is used as a grounded conductor or an equipment grounding conductor shall be distinguishable from other conductors.

(ii) Marking. Type SJ, SJO, SJT, SJTO, S, SO, ST, and STO cords shall not be used unless durably marked on the surface with the type designation, size, and number of conductors.

(iii) Splices. Flexible cords shall be used only in continuous lengths without splice or tap. Hard service flexible cords No. 12 or larger may be repaired if spliced so that the splice retains the insulation, outer sheath properties, and usage characteristics of the cord being spliced.

(iv) Strain relief. Flexible cords shall be connected to devices and fittings so that strain relief is provided which will

prevent pull from being directly transmitted to joints or terminal screws.

(v) Cords passing through holes. Flexible cords and cables shall be protected by bushings or fittings where passing through holes in covers, outlet boxes, or similar enclosures.

(vi) Trailing cables shall be protected from damage.

(vii) Cord and cable passing through work areas shall be covered or elevated to protect it from damage which would create a hazard to employees.

(8) Portable cables over 600 volts, nominal. Multiconductor portable cable for use in supplying power to portable or mobile equipment at over 600 volts, nominal, shall consist of No. 8 or larger conductors employing flexible stranding. Cables operated at over 2000 volts shall be shielded for the purpose of confining the voltage stresses to the insulation. Grounding conductors shall be provided. Connectors for these cables shall be of a locking type with provisions to prevent their opening or closing while energized. Strain relief shall be provided at connections and terminations. Portable cables shall not be operated with splices unless the splices are of the permanent molded, vulcanized, or other equivalent type. Termination enclosures shall be marked with a high voltage hazard warning, and terminations shall be accessible only to authorized and qualified personnel.

(9) Fixture wires.

(a) General. Fixture wires shall be suitable for the voltage, temperature, and location of use. A fixture wire which is used as a grounded conductor shall be identified.

(b) Uses permitted. Fixture wires may be used:

(i) For installation in lighting, fixtures and in similar equipment where enclosed or protected and not subject to bending or twisting in use; or

(ii) For connecting lighting fixtures to the branch-circuit conductors supplying the fixtures.

(c) Uses not permitted. Fixture wires shall not be used as branch-circuit conductors except as permitted for Class 1 power-limited circuits.

(10) Equipment for general use.

(a) Lighting fixtures, lampholders, lamps, and receptacles.

(i) Live parts. Fixtures, lampholders, lamps, rosettes, and receptacles shall have no live parts normally exposed to employee contact. However, rosettes and cleat-type lampholders and receptacles located at least 8 feet (2.44 m) above the floor may have exposed parts.

(ii) Support. Fixtures, lampholders, rosettes, and receptacles shall be securely supported. A fixture that weighs more than 6 pounds (2.72 kg) or exceeds 16 inches (406 mm) in any dimension shall not be supported by the screw shell of a lampholder.

(iii) Portable lamps. Portable lamps shall be wired with flexible cord and an attachment plug of the polarized or grounding type. If the portable lamp uses an Edison-based lampholder, the grounded conductor shall be identified and attached to the screw shell and the identified blade of the attachment plug. In addition, portable handlamps shall comply with the following:

(A) Metal shell, paperlined lampholders shall not be used;

(B) Handlamps shall be equipped with a handle of molded composition or other insulating material;

(C) Handlamps shall be equipped with a substantial guard attached to the lampholder or handle;

(D) Metallic guards shall be grounded by the means of an equipment grounding conductor run within the power supply cord.

(iv) Lampholders. Lampholders of the screw-shell type shall be installed for use as lampholders only. Lampholders installed in wet or damp locations shall be of the weatherproof type.

(v) Fixtures. Fixtures installed in wet or damp locations shall be identified for the purpose and shall be installed so that water cannot enter or accumulate in wireways, lampholders, or other electrical parts.

(b) Receptacles, cord connectors, and attachment plugs (caps).

(i) Configuration. Receptacles, cord connectors, and attachment plugs shall be constructed so that no receptacle or cord connector will accept an attachment plug with a different voltage or current rating than that for which the device is intended. However, a 20-ampere T-slot receptacle or cord connector may accept a 15-ampere attachment plug of the same voltage rating. Receptacles connected to circuits having different voltages, frequencies, or types of current (AC or DC) on the same premises shall be of such design that the attachment plugs used on these circuits are not interchangeable.

(ii) Damp and wet locations. A receptacle installed in a wet or damp location shall be designed for the location.

(c) Appliances.

(i) Live parts. Appliances, other than those in which the current-carrying parts at high temperatures are necessarily exposed, shall have no live parts normally exposed to employee contact.

(ii) Disconnecting means. A means shall be provided to disconnect each appliance.

(iii) Rating. Each appliance shall be marked with its rating in volts and amperes or volts and watts.

(d) Motors. This subdivision applies to motors, motor circuits, and controllers.

(i) In sight from. If specified that one piece of equipment shall be "in sight from" another piece of equipment, one shall be visible and not more than 50 feet (15.2 m) from the other.

(ii) Disconnecting means.

(A) A disconnecting means shall be located in sight from the controller location. The controller disconnecting means for motor branch circuits over 600 volts, nominal, may be out of sight of the controller, if the controller is marked with a warning label giving the location and identification of the disconnecting means which is to be locked in the open position.

(B) The disconnecting means shall disconnect the motor and the controller from all ungrounded supply conductors and shall be so designed that no pole can be operated independently.

(C) If a motor and the driven machinery are not in sight from the controller location, the installation shall comply with one of the following conditions:

(I) The controller disconnecting means shall be capable of being locked in the open position.

(II) A manually operable switch that will disconnect the motor from its source of supply shall be placed in sight from the motor location.

(D) The disconnecting means shall plainly indicate whether it is in the open (off) or closed (on) position.

(E) The disconnecting means shall be readily accessible. If more than one disconnect is provided for the same equipment, only one need be readily accessible.

(F) An individual disconnecting means shall be provided for each motor, but a single disconnecting means may be used for a group of motors under any one of the following conditions:

(I) If a number of motors drive special parts of a single machine or piece of apparatus, such as a metal or woodworking machine, crane, or hoist;

(II) If a group of motors is under the protection of one set of branch-circuit protective devices; or

(III) If a group of motors is in a single room in sight from the location of the disconnecting means.

(iii) Motor overload, short-circuit, and ground-fault protection. Motors, motor-control apparatus, and motor branch-circuit conductors shall be protected against overheating due to motor overloads or failure to start, and against short-circuits or ground faults. These provisions do not require overload protection that will stop a motor where a shutdown is likely to introduce additional or increased hazards, as in the case of fire pumps, or where continued operation of a motor is necessary for a safe shutdown of equipment or process and motor overload sensing devices are connected to a supervised alarm.

(iv) Protection of live parts—all voltages.

(A) Stationary motors having commutators, collectors, and brush rigging located inside of motor end brackets and not conductively connected to supply circuits operating at more than 150 volts to ground need not have such parts guarded. Exposed live parts of motors and controllers operating at 50 volts or more between terminals shall be guarded against accidental contact by any of the following:

(I) By installation in a room or enclosure that is accessible only to qualified persons;

(II) By installation on a balcony, gallery, or platform, so elevated and arranged as to exclude unqualified persons; or

(III) By elevation 8 feet (2.44 m) or more above the floor.

(B) Where live parts of motors or controllers operating at over 150 volts to ground are guarded against accidental contact only by location, and where adjustment or other attendance may be necessary during the operation of the apparatus, insulating mats or platforms shall be provided so that the attendant cannot readily touch live parts unless standing on the mats or platforms.

(e) Transformers.

(i) Application. The following subsections cover the installation of all transformers, except:

(A) Current transformers;

(B) Dry-type transformers installed as a component part of other apparatus;

(C) Transformers which are an integral part of an X-ray, high frequency, or electrostatic-coating apparatus;

(D) Transformers used with Class 2 and Class 3 circuits, sign and outline lighting, electric discharge lighting, and power-limited fire-protective signaling circuits.

(ii) Operating voltage. The operating voltage of exposed live parts of transformer installations shall be indicated by warning signs or visible markings on the equipment or structure.

(iii) Transformers over 35 kV. Dry-type, high fire point liquid-insulated, and askarel-insulated transformers installed indoors and rated over 35 kV shall be in a vault.

(iv) Oil-insulated transformers. If they present a fire hazard to employees, oil-insulated transformers installed indoors shall be in a vault.

(v) Fire protection. Combustible material, combustible buildings and parts of buildings, fire escapes, and door and window openings shall be safeguarded from fires which may originate in oil-insulated transformers attached to or adjacent to a building or combustible material.

(vi) Transformer vaults. Transformer vaults shall be constructed so as to contain fire and combustible liquids within the vault and to prevent unauthorized access. Locks and latches shall be so arranged that a vault door can be readily opened from the inside.

(vii) Pipes and ducts. Any pipe or duct system foreign to the vault installation shall not enter or pass through a transformer vault.

(viii) Material storage. Materials shall not be stored in transformer vaults.

(f) Capacitors.

(i) Drainage of stored charge. All capacitors, except surge capacitors or capacitors included as a component part of other apparatus, shall be provided with an automatic means of draining the stored charge and maintaining the discharged state after the capacitor is disconnected from its source of supply.

(ii) Over 600 volts. Capacitors rated over 600 volts, nominal, shall comply with the following additional requirements:

(A) Isolating or disconnecting switches (with no interrupting rating) shall be interlocked with the load interrupting device or shall be provided with prominently displayed caution signs to prevent switching load current.

(B) For series capacitors the proper switching shall be assured by use of at least one of the following:

(I) Mechanically sequenced isolating and bypass switches;

(II) Interlocks; or

(III) Switching procedure prominently displayed at the switching location.

[Statutory Authority: Chapter 49.17 RCW. 93-19-142 (Order 93-04), § 296-155-449, filed 9/22/93, effective 11/1/93; 92-23-017 (Order 92-13), § 296-155-449, filed 11/10/92, effective 12/18/92; 88-11-021 (Order 88-04), § 296-155-449, filed 5/11/88.]

WAC 296-155-452 Specific purpose equipment and installations. (1) Cranes and hoists. This subsection applies to the installation of electric equipment and wiring used in connection with cranes, monorail hoists, hoists, and all runways.

(a) Disconnecting means.

(i) Runway conductor disconnecting means. A readily accessible disconnecting means shall be provided between the runway contact conductors and the power supply.

(ii) Disconnecting means for cranes and monorail hoists. A disconnecting means, capable of being locked in the open position, shall be provided in the leads from the runway contact conductors or other power supply on any crane or monorail hoist.

(A) If this additional disconnecting means is not readily accessible from the crane or monorail hoist operating station, means shall be provided at the operating station to open the power circuit to all motors of the crane or monorail hoist.

(B) The additional disconnect may be omitted if a monorail hoist or hand-propelled crane bridge installation meets all of the following:

(I) The unit is floor controlled;

(II) The unit is within view of the power supply disconnecting means; and

(III) No fixed work platform has been provided for servicing the unit.

(b) Control. A limit switch or other device shall be provided to prevent the load block from passing the safe upper limit of travel of any hoisting mechanism.

(c) Clearance. The dimension of the working space in the direction of access to live parts which may require examination, adjustment, servicing, or maintenance while alive shall be a minimum of 2 feet 6 inches (762 mm). Where controls are enclosed in cabinets, the door(s) shall open at least 90 degrees or be removable, or the installation shall provide equivalent access.

(d) Grounding. All exposed metal parts of cranes, monorail hoists, hoists and accessories including pendant controls shall be metallically joined together into a continuous electrical conductor so that the entire crane or hoist will be grounded in accordance with WAC 296-155-434(6). Moving parts, other than removable accessories or attachments, having metal-to-metal bearing surfaces shall be considered to be electrically connected to each other through the bearing surfaces for grounding purposes. The trolley frame and bridge frame shall be considered as electrically grounded through the bridge and trolley wheels and its respective tracks unless conditions such as paint or other insulating materials prevent reliable metal-to-metal contact. In this case a separate bonding conductor shall be provided.

(2) Elevators, escalators, and moving walks.

(a) Disconnecting means. Elevators, escalators, and moving walks shall have a single means for disconnecting all ungrounded main power supply conductors for each unit.

(b) Control panels. If control panels are not located in the same space as the drive machine, they shall be located in cabinets with doors or panels capable of being locked closed.

(3) Electric welders—disconnecting means.

(a) Motor-generator, AC transformer, and DC rectifier arc welders. A disconnecting means shall be provided in the supply circuit for each motor-generator arc welder, and for each AC transformer and DC rectifier arc welder which is not equipped with a disconnect mounted as an integral part of the welder.

(b) Resistance welders. A switch or circuit breaker shall be provided by which each resistance welder and its control equipment can be isolated from the supply circuit. The ampere rating of this disconnecting means shall not be less than the supply conductor ampacity.

(4) X-ray equipment.

(a) Disconnecting means.

(i) General. A disconnecting means shall be provided in the supply circuit. The disconnecting means shall be operable from a location readily accessible from the X-ray control. For equipment connected to a 120-volt branch circuit of 30 amperes or less, a grounding-type attachment plug cap and receptacle of proper rating may serve as a disconnecting means.

(ii) More than one piece of equipment. If more than one piece of equipment is operated from the same high-voltage circuit, each piece or each group of equipment as a unit shall be provided with a high-voltage switch or equivalent disconnecting means. This disconnecting means shall be constructed, enclosed, or located so as to avoid contact by employees with its live parts.

(b) Control-radiographic and fluoroscopic types. Radiographic and fluoroscopic-type equipment shall be effectively enclosed or shall have interlocks that deenergize the equipment automatically to prevent ready access to live current-carrying parts.

[Statutory Authority: Chapter 49.17 RCW. 88-11-021 (Order 88-04), § 296-155-452, filed 5/11/88.]

WAC 296-155-456 Hazardous (classified) locations. (1) Scope. This section sets forth requirements for electric equipment and wiring in locations which are classified depending on the properties of the flammable vapors, liquids or gases, or combustible dusts or fibers which may be present therein and the likelihood that a flammable or combustible concentration or quantity is present. Each room, section or area shall be considered individually in determining its classification. These hazardous (classified) locations are assigned six designations as follows: Class I, Division 1; Class I, Division 2; Class II, Division 1; Class II, Division 2; Class III, Division 1; Class III, Division 2. For definitions of these locations see WAC 296-155-428. All applicable requirements in this part apply to all hazardous (classified) locations, unless modified by provisions of this section.

(a) All components and utilization equipment used in a hazardous location shall be chosen from among those listed by a nationally recognized testing laboratory, such as Underwriters' Laboratories, Inc., or Factory Mutual Engineering Corp., except custom-made components and utilization equipment.

(b) Equipment approved for a specific hazardous location shall not be installed or intermixed with equipment approved for another specific hazardous location.

(2) Electrical installations. Equipment, wiring methods, and installations of equipment in hazardous (classified) locations shall be approved as intrinsically safe or approved for the hazardous (classified) location or safe for the hazardous (classified) location. Requirements for each of these options are as follows:

(a) Intrinsically safe. Equipment and associated wiring approved as intrinsically safe is permitted in any hazardous (classified) location included in its listing or labeling.

(b) Approved for the hazardous (classified) location.

(i) General. Equipment shall be approved not only for the class of location but also for the ignitible or combustible properties of the specific gas, vapor, dust, or fiber that will be present.

Note: NFPA 70, the National Electrical Code, lists or defines hazardous gases, vapors, and dusts by "groups" characterized by their ignitible or combustible properties.

(ii) Marking. Equipment shall not be used unless it is marked to show the class, group, and operating temperature or temperature range, based on operation in a 40°C ambient, for which it is approved. The temperature marking shall not exceed the ignition temperature of the specific gas, vapor, or dust to be encountered. However, the following provisions modify this marking requirement for specific equipment:

(A) Equipment of the nonheat-producing type (such as junction boxes, conduit, and fitting) and equipment of the heat-producing type having a maximum temperature of not more than 100°C (212°F) need not have a marked operating temperature or temperature range.

(B) Fixed lighting fixtures marked for use only in Class I, Division 2 locations need not be marked to indicate the group.

(C) Fixed general-purpose equipment in Class I locations, other than lighting fixtures, which is acceptable for use in Class I, Division 2 locations need not be marked with the class, group, division, or operating temperature.

(D) Fixed dust-tight equipment, other than lighting fixtures, which is acceptable for use in Class II, Division 2 and Class III locations need not be marked with the class, group, division, or operating temperature.

(c) Safe for the hazardous (classified) location. Equipment which is safe for the location shall be of a type and design which the employer demonstrates will provide protection from the hazards arising from the combustibility and flammability of vapors, liquids, gases, dusts, or fibers.

Note: The National Electrical Code, NFPA 70, contains guidelines for determining the type and design of equipment and installations which will meet this requirement. The guidelines of this document address electric wiring, equipment, and systems installed in hazardous (classified) locations and contain specific provisions for the following: Wiring methods, wiring connections, conductor insulation, flexible cords, sealing and drainage, transformers, capacitors, switches, circuit breakers, fuses, motor controllers, receptacles, attachment plugs, meters, relays, instruments, resistors, generators, motors, lighting fixtures, storage battery charging equipment, electric cranes, electric hoists and similar equipment, utilization equipment, signaling systems, alarm systems, remote control systems, local loud speaker and communication systems, ventilation piping, live parts, lightning surge protection, and grounding. Compliance with these guidelines will constitute one means, but not the only means, of compliance with this subsection.

(3) Conduits. All conduits shall be threaded and shall be made wrench-tight. Where it is impractical to make a threaded joint tight, a bonding jumper shall be utilized.

[Statutory Authority: Chapter 49.17 RCW. 88-11-021 (Order 88-04), § 296-155-456, filed 5/11/88.]

WAC 296-155-459 Special systems. (1) Systems over 600 volts, nominal. (a) through (d) of this subsection contain general requirements for all circuits and equipment operated at over 600 volts.

(a) Wiring methods for fixed installations.

(i) Above ground. Above-ground conductors shall be installed in rigid metal conduit, in intermediate metal conduit, in cable trays, in cablebus, in other suitable raceways, or as open runs of metal-clad cable designed for the use and purpose. However, open runs of nonmetallic-sheathed cable or of bare conductors or busbars may be installed in locations which are accessible only to qualified persons. Metallic shielding components, such as tapes, wires, or braids for conductors, shall be grounded. Open runs of insulated wires and cables having a bare lead sheath or a braided outer covering shall be supported in a manner designed to prevent physical damage to the braid or sheath.

(ii) Installations emerging from the ground. Conductors emerging from the ground shall be enclosed in raceways. Raceways installed on poles shall be of rigid metal conduit, intermediate metal conduit, PVC schedule 80 or equivalent extending from the ground line up to a point 8 feet (2.44 m) above finished grade. Conductors entering a building shall be protected by an enclosure from the ground line to the point of entrance. Metallic enclosures shall be grounded.

(b) Interrupting and isolating devices.

(i) Circuit breakers. Circuit breakers located indoors shall consist of metal-enclosed or fire-resistant, cell-mounted units. In locations accessible only to qualified personnel, open mounting of circuit breakers is permitted. A means of indicating the open and closed position of circuit breakers shall be provided.

(ii) Fused cutouts. Fused cutouts installed in buildings or transformer vaults shall be of a type identified for the purpose. They shall be readily accessible for fuse replacement.

(iii) Equipment isolating means. A means shall be provided to completely isolate equipment for inspection and repairs. Isolating means which are not designed to interrupt the load current of the circuit shall be either interlocked with a circuit interrupter or provided with a sign warning against opening them under load.

(c) Mobile and portable equipment.

(i) Power cable connections to mobile machines. A metallic enclosure shall be provided on the mobile machine for enclosing the terminals of the power cable. The enclosure shall include provisions for a solid connection for the ground wire(s) terminal to ground effectively the machine frame. The method of cable termination used shall prevent any strain or pull on the cable from stressing the electrical connections. The enclosure shall have provision for locking so only authorized qualified persons may open it and shall be marked with a sign warning of the presence of energized parts.

(ii) Guarding live parts. All energized switching and control parts shall be enclosed in effectively grounded metal cabinets or enclosures. Circuit breakers and protective equipment shall have the operating means projecting through the metal cabinet or enclosure so these units can be reset without locked doors being opened. Enclosures and metal cabinets shall be locked so that only authorized qualified persons have access and shall be marked with a sign warning of the presence of energized parts. Collector ring assemblies on revolving-type machines (shovels, draglines, etc.) shall be guarded.

(d) Tunnel installations.

(i) Application. The provisions of this item apply to installation and use of high-voltage power distribution and

utilization equipment which is associated with tunnels and which is portable and/or mobile, such as substations, trailers, cars, mobile shovels, draglines, hoists, drills, dredges, compressors, pumps, conveyors, and underground excavators.

(ii) Conductors. Conductors in tunnels shall be installed in one or more of the following:

(A) Metal conduit or other metal raceway;

(B) Type MC cable; or

(C) Other suitable multiconductor cable.

Conductors shall also be so located or guarded as to protect them from physical damage. Multiconductor portable cable may supply mobile equipment. An equipment grounding conductor shall be run with circuit conductors inside the metal raceway or inside the multiconductor cable jacket. The equipment grounding conductor may be insulated or bare.

(iii) Guarding live parts. Bare terminals of transformers, switches, motor controllers, and other equipment shall be enclosed to prevent accidental contact with energized parts. Enclosures for use in tunnels shall be drip-proof, weatherproof, or submersible as required by the environmental conditions.

(iv) Disconnecting means. A disconnecting means that simultaneously opens all ungrounded conductors shall be installed at each transformer or motor location.

(v) Grounding and bonding. All nonenergized metal parts of electric equipment and metal raceways and cable sheaths shall be grounded and bonded to all metal pipes and rails at the portal and at intervals not exceeding 1000 feet (305 m) throughout the tunnel.

(2) Class 1, Class 2, and Class 3 remote control, signaling, and power-limited circuits.

(a) Classification. Class 1, Class 2, or Class 3 remote control, signaling, or power-limited circuits are characterized by their usage and electrical power limitation which differentiates them from light and power circuits. These circuits are classified in accordance with their respective voltage and power limitations as summarized in (a)(i) through (iii) of this subsection.

(i) Class 1 circuits.

(A) A Class 1 power-limited circuit is supplied from a source having a rated output of not more than 30 volts and 1000 volt-amperes.

(B) A Class 1 remote control circuit or a Class 1 signaling circuit has a voltage which does not exceed 600 volts; however, the power output of the source need not be limited.

(ii) Class 2 and Class 3 circuits.

(A) Power for Class 2 and Class 3 circuits is limited either inherently (in which no overcurrent protection is required) or by a combination of a power source and overcurrent protection.

(B) The maximum circuit voltage is 150 volts AC or DC for a Class 2 inherently limited power source, and 100 volts AC or DC for a Class 3 inherently limited power source.

(C) The maximum circuit voltage is 30 volts AC and 60 volts DC for a Class 2 power source limited by overcurrent protection, and 150 volts AC or DC for a Class 3 power source limited by overcurrent protection.

(iii) Application. The maximum circuit voltages in (a)(i) and (ii) of this subsection apply to sinusoidal AC or continuous DC power sources, and where wet contact occurrence is not likely.

(b) Marking. A Class 2 or Class 3 power supply unit shall not be used unless it is durably marked where plainly visible to indicate the class of supply and its electrical rating.

(3) Communications systems.

(a) Scope. These provisions for communication systems apply to such systems as central-station-connected and non-central-station-connected telephone circuits, radio receiving and transmitting equipment, and outside wiring for fire and burglar alarm, and similar central station systems. These installations need not comply with the provisions of WAC 296-155-444 through 296-155-459(2), except WAC 296-155-447 (3)(a)(ii) and 296-155-456.

(b) Protective devices.

(i) Circuits exposed to power conductors. Communication circuits so located as to be exposed to accidental contact with light or power conductors operating at over 300 volts shall have each circuit so exposed provided with an approved protector.

(ii) Antenna lead-ins. Each conductor of a lead-in from an outdoor antenna shall be provided with an antenna discharge unit or other means that will drain static charges from the antenna system.

(c) Conductor location.

(i) Outside of buildings.

(A) Receiving distribution lead-in or aerial-drop cables attached to buildings and lead-in conductors to radio transmitters shall be so installed as to avoid the possibility of accidental contact with electric light or power conductors.

(B) The clearance between lead-in conductors and any lightning protection conductors shall not be less than 6 feet (1.83 m).

(ii) On poles. Where practicable, communication conductors on poles shall be located below the light or power conductors. Communications conductors shall not be attached to a crossarm that carries light or power conductors.

(iii) Inside of buildings. Indoor antennas, lead-ins, and other communication conductors attached as open conductors to the inside of buildings shall be located at least 2 inches (50.8 mm) from conductors of any light or power or Class 1 circuits unless a special and equally protective method of conductor separation is employed.

(d) Equipment location. Outdoor metal structures supporting antennas, as well as self-supporting antennas such as vertical rods or dipole structures, shall be located as far away from overhead conductors of electric light and power circuits of over 150 volts to ground as necessary to avoid the possibility of the antenna or structure falling into or making accidental contact with such circuits.

(e) Grounding.

(i) Lead-in conductors. If exposed to contact with electric light or power conductors, the metal sheath of aerial cables entering buildings shall be grounded or shall be interrupted close to the entrance to the building by an insulating joint or equivalent device. Where protective devices are used, they shall be grounded.

(ii) Antenna structures. Masts and metal structures supporting antennas shall be permanently and effectively grounded without splice or connection in the grounding conductor.

(iii) Equipment enclosures. Transmitters shall be enclosed in a metal frame or grill or separated from the oper-

ating space by a barrier, all metallic parts of which are effectively connected to ground. All external metal handles and controls accessible to the operating personnel shall be effectively grounded. Unpowered equipment and enclosures shall be considered grounded where connected to an attached coaxial cable with an effectively grounded metallic shield.

[Statutory Authority: Chapter 49.17 RCW. 93-19-142 (Order 93-04), § 296-155-459, filed 9/22/93, effective 11/1/93; 88-11-021 (Order 88-04), § 296-155-459, filed 5/11/88.]

WAC 296-155-462 Definitions applicable to this part. The definitions given in this section apply to the terms used in Part I. The definitions given here for "approved" and "qualified person" apply, instead of the definitions given in WAC 296-155-012, to the use of these terms in Part I.

(1) "Acceptable." An installation or equipment is acceptable to the director, and approved within the meaning of this Part I:

(a) If it is accepted, certified, listed, labeled, or otherwise determined to be safe by a qualified testing laboratory capable of determining the suitability of materials and equipment for installation and use in accordance with this standard; or

(b) With respect to an installation or equipment of a kind which no qualified testing laboratory accepts, certifies, lists, labels, or determines to be safe, if it is inspected or tested by another state agency, or by a federal, municipal, or other local authority responsible for enforcing occupational safety provisions of the National Electrical Code, and found in compliance with those provisions; or

(c) With respect to custom-made equipment or related installations which are designed, fabricated for, and intended for use by a particular customer, if it is determined to be safe for its intended use by its manufacturer on the basis of test data which the employer keeps and makes available for inspection to the director and his/her authorized representatives.

(2) "Accepted." An installation is "accepted" if it has been inspected and found to be safe by a qualified testing laboratory.

(3) "Accessible." (As applied to wiring methods.) Capable of being removed or exposed without damaging the building structure or finish, or not permanently closed in by the structure or finish of the building. (See "concealed" and "exposed.")

(4) "Accessible." (As applied to equipment.) Admitting close approach; not guarded by locked doors, elevation, or other effective means. (See "readily accessible.")

(5) "Ampacity." The current in amperes a conductor can carry continuously under the conditions of use without exceeding its temperature rating.

(6) "Appliances." Utilization equipment, generally other than industrial, normally built in standardized sizes or types, which is installed or connected as a unit to perform one or more functions.

(7) "Approved." Approved by the director of the department of labor and industries or his/her authorized representative: Provided, however, That should a provision of this chapter state that approval by an agency or organization other than the department of labor and industries is required, such as Underwriters' Laboratories, the Bureau of Mines, or Mine Safety and Health Administration (MSHA) and the National Institute for Occupational Safety and Health (NIOSH) the provisions of WAC 296-155-006 shall apply.

(8) "Askarel." A generic term for a group of nonflammable synthetic chlorinated hydrocarbons used as electrical insulating media. Askarels of various compositional types are used. Under arcing conditions the gases produced, while consisting predominantly of noncombustible hydrogen chloride, can include varying amounts of combustible gases depending upon the askarel type.

(9) "Attachment plug (plug cap) (cap)." A device which, by insertion in a receptacle, establishes connection between the conductors of the attached flexible cord and the conductors connected permanently to the receptacle.

(10) "Automatic." Self-acting, operating by its own mechanism when actuated by some impersonal influence, as for example, a change in current strength, pressure, temperature, or mechanical configuration.

(11) "Bare conductor." See "conductor."

(12) "Bonding." The permanent joining of metallic parts to form an electrically conductive path which will assure electrical continuity and the capacity to conduct safely any current likely to be imposed.

(13) "Bonding jumper." A reliable conductor to assure the required electrical conductivity between metal parts required to be electrically connected.

(14) "Branch circuits." That portion of a wiring system extending beyond the final overcurrent device protecting the circuit. (A device not approved for branch circuit protection, such as thermal cutout or motor overload protective device, is not considered as the overcurrent device protecting the circuit.)

(15) "Building." A structure which stands alone or which is cut off from adjoining structures by fire walls with all openings therein protected by approved fire doors.

(16) "Cabinet." An enclosure designed either for surface or flush mounting, and provided with a frame, mat, or trim in which a swinging door or doors are or may be hung.

(17) "Certified." Equipment is "certified" if it:

(a) Has been tested and found by a qualified testing laboratory to meet applicable test standards or to be safe for use in a specified manner; and

(b) Is of a kind whose production is periodically inspected by a qualified testing laboratory. Certified equipment must bear a label, tag, or other record of certification.

(18) "Circuit breaker."

(a) (600 volts nominal, or less.) A device designed to open and close a circuit by nonautomatic means and to open the circuit automatically on a predetermined overcurrent without injury to itself when properly applied within its rating.

(b) (Over 600 volts, nominal.) A switching device capable of making, carrying, and breaking currents under normal circuit conditions, and also making, carrying for a specified time, and breaking currents under specified abnormal circuit conditions, such as those of short circuit.

(19) "Class I locations." Class I locations are those in which flammable gases or vapors are or may be present in the air in quantities sufficient to produce explosive or ignitible mixtures. Class I locations include the following:

(a) Class I, Division 1. A Class I, Division 1 location is a location:

(i) In which ignitible concentrations of flammable gases or vapors may exist under normal operating conditions; or

(ii) In which ignitible concentrations of such gases or vapors may exist frequently because of repair or maintenance operations or because of leakage; or

(iii) In which breakdown or faulty operation of equipment or processes might release ignitible concentrations of flammable gases or vapors, and might also cause simultaneous failure of electric equipment.

Note: This classification usually includes locations where volatile flammable liquids or liquefied flammable gases are transferred from one container to another; interiors of spray booths and areas in the vicinity of spraying and painting operations where volatile flammable solvents are used; locations containing open tanks or vats of volatile flammable liquids; drying rooms or compartments for the evaporation of flammable solvents; inadequately ventilated pump rooms for flammable gas or for volatile flammable liquids; and all other locations where ignitible concentrations of flammable vapors or gases are likely to occur in the course of normal operations.

(b) Class I, Division 2. A Class I, Division 2 location is a location:

(i) In which volatile flammable liquids or flammable gases are handled, processed, or used, but in which the hazardous liquids, vapors, or gases will normally be confined within closed containers or closed systems from which they can escape only in case of accidental rupture or breakdown of such containers or systems, or in case of abnormal operation of equipment; or

(ii) In which ignitible concentrations of gases or vapors are normally prevented by positive mechanical ventilation, and which might become hazardous through failure or abnormal operations of the ventilating equipment; or

(iii) That is adjacent to a Class I, Division 1 location, and to which ignitible concentrations of gases or vapors might occasionally be communicated unless such communication is prevented by adequate positive-pressure ventilation from a source of clean air, and effective safeguards against ventilation failure are provided.

Note: This classification usually includes locations where volatile flammable liquids or flammable gases or vapors are used, but which would become hazardous only in case of an accident or of some unusual operating condition. The quantity of flammable material that might escape in case of accident, the adequacy of ventilating equipment, the total area involved, and the record of the industry or business with respect to explosions or fires are all factors that merit consideration in determining the classification and extent of each location.

Piping without valves, checks, meters, and similar devices would not ordinarily introduce a hazardous condition even though used for flammable liquids or gases. Locations used for the storage of flammable liquids or of liquefied or compressed gases in sealed containers would not normally be considered hazardous unless also subject to other hazardous conditions.

Electrical conduits and their associated enclosures separated from process fluids by a single seal or barrier are classed as a Division 2 location if the outside of the conduit and enclosures is a nonhazardous location.

(20) "Class II locations." Class II locations are those that are hazardous because of the presence of combustible dust. Class II locations include the following:

(a) Class II, Division 1. A Class II, Division 1 location is a location:

(i) In which combustible dust is or may be in suspension in the air under normal operating conditions, in quantities sufficient to produce explosive or ignitible mixtures; or

(ii) Where mechanical failure or abnormal operation of machinery or equipment might cause such explosive or ignitible mixtures to be produced, and might also provide a source of ignition through simultaneous failure of electric equipment, operation of protection devices, or from other causes; or

(iii) In which combustible dusts of an electrically conductive nature may be present.

Note: Combustible dusts which are electrically nonconductive include dusts produced in the handling and processing of grain and grain products, pulverized sugar and cocoa, dried egg and milk powders, pulverized spices, starch and pastes, potato and woodflour, oil meal from beans and seed, dried hay, and other organic materials which may produce combustible dusts when processed or handled. Dusts containing magnesium or aluminum are particularly hazardous and the use of extreme caution is necessary to avoid ignition and explosion.

(b) Class II, Division 2. A Class II, Division 2 location is a location in which:

(i) Combustible dust will not normally be in suspension in the air in quantities sufficient to produce explosive or ignitible mixtures, and dust accumulations are normally insufficient to interfere with the normal operation of electrical equipment or other apparatus; or

(ii) Dust may be in suspension in the air as a result of infrequent malfunctioning of handling or processing equipment, and dust accumulations resulting therefrom may be ignitible by abnormal operation or failure of electrical equipment or other apparatus.

Note: This classification includes locations where dangerous concentrations of suspended dust would not be likely but where dust accumulations might form on or in the vicinity of electric equipment. These areas may contain equipment from which appreciable quantities of dust would escape under abnormal operating conditions or be adjacent to a Class II, Division 1 location, as described above, into which an explosive or ignitible concentration of dust may be put into suspension under abnormal operating conditions.

(21) "Class III locations." Class III locations are those that are hazardous because of the presence of easily ignitible fibers or flyings but in which such fibers or flyings are not likely to be in suspension in the air in quantities sufficient to produce ignitible mixtures. Class III locations include the following:

(a) Class III, Division 1. A Class III, Division 1 location is a location in which easily ignitible fibers or materials producing combustible flyings are handled, manufactured, or used.

Note: Easily ignitible fibers and flyings include rayon, cotton (including cotton linters and cotton waste), sisal or henequen, istle, jute, hemp, tow, cocoa fiber, oakum, baled waste kapok, Spanish moss, excelsior, sawdust, woodchips, and other material of similar nature.

(b) Class III, Division 2. A Class III, Division 2 location is a location in which easily ignitible fibers are stored or handled, except in process of manufacture. Collector ring. A collector ring is an assembly of slip rings for transferring electrical energy from a stationary to a rotating member.

(22) "Collector ring." A collector ring is an assembly of slip rings for transferring electrical energy from a stationary to a rotating member.

(23) "Concealed." Rendered inaccessible by the structure or finish of the building. Wires in concealed raceways are considered concealed, even though they may become accessible by withdrawing them. See "accessible. (As applied to wiring methods.)"

(24) "Conductor."

(a) Bare. A conductor having no covering or electrical insulation whatsoever.

(b) Covered. A conductor encased within material of composition or thickness that is not recognized as electrical insulation.

(c) Insulated. A conductor encased within material of composition and thickness that is recognized as electrical insulation.

(25) "Controller." A device or group of devices that serves to govern, in some predetermined manner, the electric power delivered to the apparatus to which it is connected.

(26) "Covered conductor." See "conductor."

(27) "Cutout." (Over 600 volts, nominal.) An assembly of a fuse support with either a fuseholder, fuse carrier, or disconnecting blade. The fuseholder or fuse carrier may include a conducting element (fuse link), or may act as the disconnecting blade by the inclusion of a nonfusible member.

(28) "Cutout box." An enclosure designed for surface mounting and having swinging doors or covers secured directly to and telescoping with the walls of the box proper. (See "cabinet.")

(29) "Damp location." See "location."

(30) "Dead front." Without live parts exposed to a person on the operating side of the equipment.

(31) "Device." A unit of an electrical system which is intended to carry but not utilize electric energy.

(32) "Disconnecting means." A device, or group of devices, or other means by which the conductors of a circuit can be disconnected from their source of supply.

(33) "Disconnecting (or isolating) switch." (Over 600 volts, nominal.) A mechanical switching device used for isolating a circuit or equipment from a source of power.

(34) "Dry location." See "location."

(35) "Enclosed." Surrounded by a case, housing, fence or walls which will prevent persons from accidentally contacting energized parts.

(36) "Enclosure." The case or housing of apparatus, or the fence or walls surrounding an installation to prevent personnel from accidentally contacting energized parts, or to protect the equipment from physical damage.

(37) "Equipment." A general term including material, fittings, devices, appliances, fixtures, apparatus, and the like, used as a part of, or in connection with, an electrical installation.

(38) "Equipment grounding conductor." See "grounding conductor, equipment."

(39) "Explosion-proof apparatus." Apparatus enclosed in a case that is capable of withstanding an explosion of a specified gas or vapor which may occur within it and of preventing the ignition of a specified gas or vapor surrounding the enclosure by sparks, flashes, or explosion of the gas or vapor within, and which operates at such an external temperature that it will not ignite a surrounding flammable atmosphere.

(40) "Exposed. (As applied to live parts.)" Capable of being inadvertently touched or approached nearer than a safe distance by a person. It is applied to parts not suitably guarded, isolated, or insulated. (See "accessible" and "concealed.")

(41) "Exposed. (As applied to wiring methods.)" On or attached to the surface or behind panels designed to allow access. See "accessible. (As applied to wiring methods.)"

(42) "Exposed. (For the purposes of WAC 296-155-459(3), Communications systems.)" Where the circuit is in such a position that in case of failure of supports or insulation, contact with another circuit may result.

(43) "Externally operable." Capable of being operated without exposing the operator to contact with live parts.

(44) "Feeder." All circuit conductors between the service equipment, or the generator switchboard of an isolated plant, and the final branch-circuit overcurrent device.

(45) "Festoon lighting." A string of outdoor lights suspended between two points more than 15 feet (4.57 m) apart.

(46) "Fitting." An accessory such as a locknut, bushing, or other part of a wiring system that is intended primarily to perform a mechanical rather than an electrical function.

(47) "Fuse." (Over 600 volts, nominal.) An overcurrent protective device with a circuit opening fusible part that is heated and severed by the passage of overcurrent through it. A fuse comprises all the parts that form a unit capable of performing the prescribed functions. It may or may not be the complete device necessary to connect it into an electrical circuit.

(48) "Ground." A conducting connection, whether intentional or accidental, between an electrical circuit or equipment and the earth, or to some conducting body that serves in place of the earth.

(49) "Grounded." Connected to earth or to some conducting body that serves in place of the earth.

(50) "Grounded, effectively." (Over 600 volts, nominal.) Permanently connected to earth through a ground connection of sufficiently low impedance and having sufficient ampacity that ground fault current which may occur cannot build up to voltages dangerous to personnel.

(51) "Grounded conductor." A system or circuit conductor that is intentionally grounded.

(52) "Grounding conductor." A conductor used to connect equipment or the grounded circuit of a wiring system to a grounding electrode or electrodes.

(53) "Grounding conductor, equipment." The conductor used to connect the noncurrent-carrying metal parts of equipment, raceways, and other enclosures to the system grounded conductor and/or the grounding electrode conductor at the service equipment or at the source of a separately derived system.

(54) "Grounding electrode conductor." The conductor used to connect the grounding electrode to the equipment

grounding conductor and/or to the grounded conductor of the circuit at the service equipment or at the source of a separately derived system.

(55) "Ground-fault circuit interrupter." A device for the protection of personnel that functions to deenergize a circuit or portion thereof within an established period of time when a current to ground exceeds some predetermined value that is less than that required to operate the overcurrent protective device of the supply circuit.

(56) "Guarded." Covered, shielded, fenced, enclosed, or otherwise protected by means of suitable covers, casings, barriers, rails, screens, mats, or platforms to remove the likelihood of approach to a point of danger or contact by persons or objects.

(57) "Hazard." That condition, potential or inherent, which is likely to cause injury, death, or occupational disease.

(58) "Hoistway." Any shaftway, hatchway, well hole, or other vertical opening or space in which an elevator or dumbwaiter is designed to operate.

(59) "Identified (conductors or terminals)." Identified, as used in reference to a conductor or its terminal, means that such conductor or terminal can be recognized as grounded.

(60) "Identified (for the use)." Recognized as suitable for the specific purpose, function, use, environment, application, etc., where described as a requirement in this standard. Suitability of equipment for a specific purpose, environment, or application is determined by a qualified testing laboratory where such identification includes labeling or listing.

(61) "Insulated conductor." See "conductor."

(62) "Interrupter switch." (Over 600 volts, nominal.) A switch capable of making, carrying, and interrupting specified currents.

(63) "Intrinsically safe equipment and associated wiring." Equipment and associated wiring in which any spark or thermal effect, produced either normally or in specified fault conditions, is incapable, under certain prescribed test conditions, of causing ignition of a mixture of flammable or combustible material in air in its most easily ignitible concentration.

(64) "Isolated." Not readily accessible to persons unless special means for access are used.

(65) "Isolated power system." A system comprising an isolating transformer or its equivalent, a line isolation monitor, and its ungrounded circuit conductors.

(66) "J-Box (junction box)." An electrical sheet metal enclosure with openings for conduit or cable with sheet metal cover. The primary purpose is for joining conductors for splicing.

(67) "Labeled." Equipment or materials to which has been attached a label, symbol or other identifying mark of a qualified testing laboratory which indicates compliance with appropriate standards or performance in a specified manner.

(68) "Lighting outlet." An outlet intended for the direct connection of a lampholder, a lighting fixture, or a pendant cord terminating in a lampholder.

(69) "Listed." Equipment or materials included in a list published by a qualified testing laboratory whose listing states either that the equipment or material meets appropriate standards or has been tested and found suitable for use in a specified manner.

(70) "Location."

(a) Damp location. Partially protected locations under canopies, marquees, roofed open porches, and like locations, and interior locations subject to moderate degrees of moisture, such as some basements.

(b) Dry location. A location not normally subject to dampness or wetness. A location classified as dry may be temporarily subject to dampness or wetness, as in the case of a building under construction.

(c) Wet location. Installations underground or in concrete slabs or masonry in direct contact with the earth, and locations subject to saturation with water or other liquids, such as locations exposed to weather and unprotected.

(71) "Mobile X ray." X-ray equipment mounted on a permanent base with wheels and/or casters for moving while completely assembled.

(72) "Motor control center." An assembly of one or more enclosed sections having a common power bus and principally containing motor control units.

(73) "Outlet." A point on the wiring system at which current is taken to supply utilization equipment.

(74) "Overcurrent." Any current in excess of the rated current of equipment or the ampacity of a conductor. It may result from overload (see definition), short circuit, or ground fault. A current in excess of rating may be accommodated by certain equipment and conductors for a given set of conditions. Hence the rules for overcurrent protection are specific for particular situations.

(75) "Overload." Operation of equipment in excess of normal, full load rating, or of a conductor in excess of rated ampacity which, when it persists for a sufficient length of time, would cause damage or dangerous overheating. A fault, such as a short circuit or ground fault, is not an overload. (See "overcurrent.")

(76) "Panelboard." A single panel or group of panel units designed for assembly in the form of a single panel; including buses, automatic overcurrent devices, and with or without switches for the control of light, heat, or power circuits; designed to be placed in a cabinet or cutout box placed in or against a wall or partition and accessible only from the front. (See "switchboard.")

(77) "Portable X ray." X-ray equipment designed to be hand-carried.

(78) "Power fuse." (Over 600 volts, nominal.) See "fuse."

(79) "Power outlet." An enclosed assembly which may include receptacles, circuit breakers, fuseholders, fused switches, buses and watt-hour meter mounting means; intended to serve as a means for distributing power required to operate mobile or temporarily installed equipment.

(80) "Premises wiring system." That interior and exterior wiring, including power, lighting, control, and signal circuit wiring together with all of its associated hardware, fittings, and wiring devices, both permanently and temporarily installed, which extends from the load end of the service drop, or load end of the service lateral conductors to the outlet(s). Such wiring does not include wiring internal to appliances, fixtures, motors, controllers, motor control centers, and similar equipment.

(81) "Qualified person." One familiar with the construction and operation of the equipment and the hazards involved.

(82) "Qualified testing laboratory." A properly equipped and staffed testing laboratory which has capabilities for and which provides the following services:

(a) Experimental testing for safety of specified items of equipment and materials referred to in this standard to determine compliance with appropriate test standards or performance in a specified manner;

(b) Inspecting the run of such items of equipment and materials at factories for product evaluation to assure compliance with the test standards;

(c) Service-value determinations through field inspections to monitor the proper use of labels on products and with authority for recall of the label in the event a hazardous product is installed;

(d) Employing a controlled procedure for identifying the listed and/or labeled equipment or materials tested; and

(e) Rendering creditable reports or findings that are objective and without bias of the tests and test methods employed.

(83) "Raceway." A channel designed expressly for holding wires, cables, or busbars, with additional functions as permitted in this part. Raceways may be of metal or insulating material, and the term includes rigid metal conduit, rigid nonmetallic conduit, intermediate metal conduit, liquidtight flexible metal conduit, flexible metallic tubing, flexible metal conduit, electrical metallic tubing, underfloor raceways, cellular concrete floor raceways, cellular metal floor raceways, surface raceways, wireways, and busways.

(84) "Readily accessible." Capable of being reached quickly for operation, renewal, or inspections, without requiring those to whom ready access is requisite to climb over or remove obstacles or to resort to portable ladders, chairs, etc. (See "accessible.")

(85) "Receptacle." A receptacle is a contact device installed at the outlet for the connection of a single attachment plug. A single receptacle is a single contact device with no other contact device on the same yoke. A multiple receptacle is a single device containing two or more receptacles.

(86) "Receptacle outlet." An outlet where one or more receptacles are installed.

(87) "Remote-control circuit." Any electric circuit that controls any other circuit through a relay or an equivalent device.

(88) "Sealable equipment." Equipment enclosed in a case or cabinet that is provided with a means of sealing or locking so that live parts cannot be made accessible without opening the enclosure. The equipment may or may not be operable without opening the enclosure.

(89) "Separately derived system." A premises wiring system whose power is derived from generator, transformer, or converter windings and has no direct electrical connection, including a solidly connected grounded circuit conductor, to supply conductors originating in another system.

(90) "Service." The conductors and equipment for delivering energy from the electricity supply system to the wiring system of the premises served.

(91) "Service conductors." The supply conductors that extend from the street main or from transformers to the service equipment of the premises supplied.

(92) "Service drop." The overhead service conductors from the last pole or other aerial support to and including the splices, if any, connecting to the service-entrance conductors at the building or other structure.

(93) "Service-entrance conductors, overhead system." The service conductors between the terminals of the service equipment and a point usually outside the building, clear of building walls, where joined by tap or splice to the service drop.

(94) "Service-entrance conductors, underground system." The service conductors between the terminals of the service equipment and the point of connection to the service lateral. Where service equipment is located outside the building walls, there may be no service-entrance conductors, or they may be entirely outside the building.

(95) "Service equipment." The necessary equipment, usually consisting of a circuit breaker or switch and fuses, and their accessories, located near the point of entrance of supply conductors to a building or other structure, or an otherwise defined area, and intended to constitute the main control and means of cutoff of the supply.

(96) "Service raceway." The raceway that encloses the service-entrance conductors.

(97) "Shock hazard." To exist at an accessible part in a circuit between the part and ground, or other accessible parts if the potential is more than 42.4 volts peak and the current through a 1,500-ohm load is more than 5 milliamperes.

(98) "Signaling circuit." Any electric circuit that energizes signaling equipment.

(99) "Switchboard." A large single panel, frame, or assembly of panels which have switches, buses, instruments, overcurrent and other protective devices mounted on the face or back or both. Switchboards are generally accessible from the rear as well as from the front and are not intended to be installed in cabinets. (See "panelboard.")

(100) "Switches."

(a) General-use switch. A switch intended for use in general distribution and branch circuits. It is rated in amperes, and it is capable of interrupting its rated current at its rated voltage.

(b) General-use snap switch. A form of general-use switch so constructed that it can be installed in flush device boxes or on outlet box covers, or otherwise used in conjunction with wiring systems recognized by this part.

(c) Isolating switch. A switch intended for isolating an electric circuit from the source of power. It has no interrupting rating, and it is intended to be operated only after the circuit has been opened by some other means.

(d) Motor-circuit switch. A switch, rated in horsepower, capable of interrupting the maximum operating overload current of a motor of the same horsepower rating as the switch at the rated voltage.

(101) "Switching devices." (Over 600 volts, nominal.) Devices designed to close and/or open one or more electric circuits. Included in this category are circuit breakers, cutouts, disconnecting (or isolating) switches, disconnecting means, and interrupter switches.

(102) "Transformer." A transformer is an apparatus for converting electrical power in an a-c system at one voltage or current into electrical power at some other voltage or current without the use of rotating parts.

(103) "Transportable X ray." X-ray equipment installed in a vehicle or that may readily be disassembled for transport in a vehicle.

(104) "Utilization equipment." Utilization equipment means equipment which utilizes electric energy for mechanical, chemical, heating, lighting, or similar useful purpose.

(105) "Utilization system." A utilization system is a system which provides electric power and light for employee workplaces, and includes the premises wiring system and utilization equipment.

(106) "Ventilated." Provided with a means to permit circulation of air sufficient to remove an excess of heat, fumes, or vapors.

(107) "Volatile flammable liquid." A flammable liquid having a flash point below 38°C (100°F) or whose temperature is above its flash point, or a Class II combustible liquid having a vapor pressure not exceeding 40 psia (276 kPa) at 38°C (100°F) whose temperature is above its flash point.

(108) "Voltage." (Of a circuit.) The greatest root-mean-square (effective) difference of potential between any two conductors of the circuit concerned.

(109) "Voltage, nominal." A nominal value assigned to a circuit or system for the purpose of conveniently designating its voltage class (as 120/240, 480Y/277, 600, etc.). The actual voltage at which a circuit operates can vary from the nominal within a range that permits satisfactory operation of equipment.

(110) "Voltage to ground." For grounded circuits, the voltage between the given conductor and that point or conductor of the circuit that is grounded; for ungrounded circuits, the greatest voltage between the given conductor and any other conductor of the circuit.

(111) "Watertight." So constructed that moisture will not enter the enclosure.

(112) "Weatherproof." So constructed or protected that exposure to the weather will not interfere with successful operation. Rainproof, raintight, or watertight equipment can fulfill the requirements for weatherproof where varying weather conditions other than wetness, such as snow, ice, dust, or temperature extremes, are not a factor.

(113) "Wet location." See "location."

[Statutory Authority: Chapter 49.17 RCW. 94-15-096 (Order 94-07), § 296-155-462, filed 7/20/94, effective 9/20/94; 93-19-142 (Order 93-04), § 296-155-462, filed 9/22/93, effective 11/1/93; 88-11-021 (Order 88-04), § 296-155-462, filed 5/11/88.]

PART J
STAIRWAYS AND LADDERS

WAC 296-155-475 Scope and application. This part applies to all stairways and ladders used in construction, alteration, repair (including painting and decorating), and demolition workplaces covered under chapter 296-155 WAC, and also sets forth, in specified circumstances, when ladders and stairways are required to be provided. Additional requirements for ladders used on or with scaffolds are contained in chapter 296-155 WAC, Part J-1.

[Statutory Authority: Chapter 49.17 RCW. 91-24-017 (Order 91-07), § 296-155-475, filed 11/22/91, effective 12/24/91. Statutory Authority: RCW 49.17.040 and 49.17.050. 86-03-074 (Order 86-14), § 296-155-475, filed 1/21/86; Order 76-6, § 296-155-475, filed 3/1/76; Order 74-26, § 296-155-475, filed 5/7/74, effective 6/6/74.]

WAC 296-155-47501 Definitions applicable to this part. (1) Cleat means a ladder crosspiece of rectangular cross section placed on edge upon which a person may step while ascending or descending a ladder.

(2) Double-cleat ladder means a ladder similar in construction to a single-cleat ladder, but with a center rail to allow simultaneous two-way traffic for employees ascending or descending.

(3) Equivalent means alternative designs, materials, or methods that the employer can demonstrate will provide an equal or greater degree of safety for employees than the method or item specified in the standard.

(4) Extension trestle ladder means a self-supporting portable ladder, adjustable in length, consisting of a trestle ladder base and a vertically adjustable extension section, with a suitable means for locking the ladders together (also see trestle ladder).

(5) Failure means load refusal, breakage, or separation of component parts. Load refusal is the point where the structural members lose their ability to carry the loads.

(6) Fixed ladder means a ladder that cannot be readily moved or carried because it is an integral part of a building or structure. A side-step fixed ladder is a fixed ladder that requires a person getting off at the top to step to the side of the ladder side rails to reach the landing. A through fixed ladder is a fixed ladder that requires a person getting off at the top to step between the side rails of the ladder to reach the landing. For the purpose of this standard, slip forms and scaffolds with built in ladders permanently attached, are considered to be fixed ladders.

(7) Handrail means a rail used to provide employees with a handhold for support.

(8) Individual-rung/step ladders means ladders without a side rail or center rail support. Such ladders are made by mounting individual steps or rungs directly to the side or wall of the structure.

(9) Job-made ladder means a ladder that is fabricated, not commercially manufactured. This definition does not apply to any individual-rung/step ladders.

(10) Ladder types. For the purpose of this standard ladder types are defined by the following types:

Type IA - Extra heavy duty industrial use.

Type I - Heavy duty industrial use such as utilities and contractors.

Type II - Medium duty industrial use such as painters, offices, and light industrial use.

Type III - Light duty household use.

(11) Landing means any area such as the ground, roof, or platform that provides access/egress for a ladder.

(12) Lower levels means those areas to which an employee can fall from a stairway or ladder. Such areas include ground levels, floors, roofs, ramps, runways, excavations, pits, tanks, material, water, equipment, and similar surfaces. It does not include the surface from which the employee falls.

(13) Maximum intended load means the total load of all employees, equipment, tools, materials, transmitted loads, and other loads anticipated to be applied to a ladder component at any one time.

(14) Nosing means that portion of a tread projecting beyond the face of the riser immediately below.

(15) Platform means a walking/working surface for persons, elevated above the surrounding floor or ground.

(16) Point of access means all areas used by employees for work-related passage from one area or level to another. Such open areas include doorways, passageways, stairway openings, studded walls, and various other permanent or temporary openings used for such travel.

(17) Portable ladder means a ladder that can be readily moved or carried.

(18) Riser height means the vertical distance from the top of a tread to the top of the next higher tread or platform/landing or the distance from the top of a platform/landing to the top of the next higher tread or platform/landing.

(19) Side-step fixed ladder. See "fixed ladder."

(20) Single-cleat ladder means a ladder consisting of a pair of side rails, connected together by cleats, rungs, or steps.

(21) Single-rail ladder means a portable ladder with rungs, cleats, or steps mounted on a single rail instead of the normal two rails used on most other ladders. Single rail ladders are prohibited from use.

(22) Special purpose ladder means a portable ladder that represents either a modification or a combination of design or construction features in one of the general purpose types of ladders previously defined, in order to adapt the ladder to special or specific uses.

(23) Spiral stairway means a series of steps attached to a vertical pole and progressing upward in a winding fashion within a cylindrical space.

(24) Stairrail system means a vertical barrier erected along the unprotected sides and edges of a stairway to prevent employees from falling to lower levels. The top surface of a stairrail system may also be a "handrail."

(25) Step stool (ladder type) means a self-supporting, foldable, portable ladder, nonadjustable in length, 32 inches or less in overall size, with flat steps and without a pail shelf, designed to be climbed on the ladder top cap as well as all steps. The side rails may continue above the top cap.

(26) Through fixed ladder. See "fixed ladder."

(27) Tread depth means the horizontal distance from front to back of a tread (excluding nosing, if any).

(28) Trestle ladder means a self-supporting portable ladder, nonadjustable in length, consisting of two sections hinged at the top to form equal angles with the base. The size is designated by the length of the side rails measured along the front edge.

(29) Unprotected sides and edges means any side or edge (except at entrances to points of access) of a stairway where there is no stairrail system or wall 36 inches (.9 m) or more in height, and any side or edge (except at entrances to points of access) of a stairway landing, or ladder platform where there is no wall or guardrail system 39 inches (1 m) or more in height.

[Statutory Authority: Chapter 49.17 RCW. 91-24-017 (Order 91-07), § 296-155-47501, filed 11/22/91, effective 12/24/91.]

WAC 296-155-476 General requirements. (1) A stairway or ladder shall be provided at all personnel points of access where there is a break in elevation of 19 inches (48 cm) or more, and no ramp, runway, sloped embankment, or personnel hoist is provided.

(a) Employees shall not use any spiral stairways that will not be a permanent part of the structure on which construction work is being performed.

(b) A double-cleated ladder or two or more separate ladders shall be provided when ladders are the only mean of access or exit from a working area for 25 or more employees, or when a ladder is to serve simultaneous two-way traffic.

(c) When a building or structure has only one point of access between levels, that point of access shall be kept clear to permit free passage of employees. When work must be performed or equipment must be used such that free passage at that point of access is restricted, a second point of access shall be provided and used.

(d) When a building or structure has two or more points of access between levels, at least one point of access shall be kept clear to permit free passage of employees.

(2) Employers shall provide and install all stairway and ladder fall protection systems required by this part and shall comply with all other pertinent requirements of this part before employees begin the work that necessitates the installation and use of stairways, ladders, and their respective fall protection systems.

[Statutory Authority: Chapter 49.17 RCW. 91-24-017 (Order 91-07), § 296-155-476, filed 11/22/91, effective 12/24/91.]

WAC 296-155-477 Stairways. (1) General. The following requirements apply to all stairways as indicated:

(a) Stairways that will not be a permanent part of the structure on which construction work is being performed shall have landings of not less than 30 inches (76 cm) in the direction of travel and extend at least 22 inches (56 cm) in width at every 12 feet (3.7 m) or less of vertical rise.

(b) Stairs shall be installed between 30 deg. and 50 deg. from horizontal.

(c) In all buildings or structures two or more stories or twenty-four feet or more in height or depth, suitable permanent or temporary stairways shall be installed.

(d) Stairways, ramps or ladders shall be provided at all points where a break in elevation of eighteen inches or more occurs in a frequently traveled passageway, entry or exit.

(e) A minimum of one stairway shall be provided for access and exit for buildings and structures to three stories or thirty-six feet; if more than three stories or thirty-six feet, two or more stairways shall be provided. Where two stairways are provided and work is being performed in the stairways, one shall be maintained clear for access between levels at all times.

(f) Wood frame buildings.

(i) The stairway to a second or higher floor shall be completed before studs are raised to support the next higher floor.

(ii) Roof and attic work areas of all buildings shall be provided with a safe means of access and egress, such as stairways, ramps or ladders.

(iii) Cleats shall not be nailed to studs to provide access to and egress from roof or other work areas.

(g) Steel frame buildings. Stairways shall extend to the uppermost floor that has been planked or decked. Ladders may be used above that point.

(h) Reinforced concrete or composite steel—Concrete buildings. Stairways shall extend to the lowermost floor upon which a complete vertical shoring system is in place. A minimum of two ladders at different locations for each floor may be used above this floor but not to exceed three floors.

(i) Riser height and tread depth shall be uniform within each flight of stairs, including any foundation structure used as one or more treads of the stairs. Variations in riser height or tread depth shall not be over 1/4-inch (0.6 cm) in any stairway system.

(j) Where doors or gates open directly on a stairway, a platform shall be provided, and the swing of the door shall not reduce the effective width of the platform to less than 20 inches (51 cm).

(k) Metal pan landings and metal pan treads, when used, shall be secured in place before filling with concrete or other material.

(l) All parts of stairways shall be free of hazardous projections, such as protruding nails.

(m) Slippery conditions on stairways shall be eliminated before the stairways are used to reach other levels.

(n) Employers are permitted to use alternating tread type stairs as long as they install, use, and maintain the stairs in accordance with manufacturer's recommendations and the following:

(i) The stair must be installed at an angle of seventy degrees or less.

(ii) The stair must be capable of withstanding a minimum uniform load of one hundred pounds per square foot with a design factor of 1.7, and the treads must be capable of carrying a minimum concentrated load of three hundred pounds at the center of any treadspan or exterior arc with a design factor of 1.7. If the stair is intended for greater loading, construction must allow for that loading.

(iii) The stair must be equipped with a handrail on each side to assist the user in climbing or descending.

(o) Due to space limitations, when a permanent stairway must be installed at an angle above fifty degrees, such an installation (commonly called an inclined or ship's ladder) shall have treads, open risers and handrails on both sides.

(p) Where ladders are permitted for access under subsection (1) of this section, means shall be provided for employee hoisting of tools and material, such as a well wheel and hoisting line or the equivalent, so employees will have both hands free for ascending and descending ladders.

(2) Temporary service. The following requirements apply to all stairways as indicated:

(a) Except during stairway construction, foot traffic is prohibited on stairways with pan stairs where the treads and/or landings are to be filled in with concrete or other material at a later date, unless the stairs are temporarily fitted with wood or other solid material at least to the top edge of each pan. Such temporary treads and landings shall be replaced when worn below the level of the top edge of the pan.

(b) Except during stairway construction, foot traffic is prohibited on skeleton metal stairs where permanent treads and/or landings are to be installed at a later date, unless the stairs are fitted with secured temporary treads and landings long enough to cover the entire tread and/or landing area.

(c) Treads for temporary service shall be made of wood or other solid material, and shall be installed the full width and depth of the stair.

(3) Stairrails and handrails. The following requirements apply to all stairways as indicated:

(a) Stairways having four or more risers or rising more than 30 inches (76 cm), whichever is less, shall be equipped with:

(i) At least one handrail; and

(ii) One stairrail system along each unprotected side or edge.

Note: When the top edge of a stairrail system also serves as a handrail, subdivision (g) of this subsection applies.

(b) Winding and spiral stairways shall be equipped with a handrail offset sufficiently to prevent walking on those portions of the stairways where the tread width is less than 6 inches (15 cm).

(c) The height of stairrails shall be as follows:

(i) Stairrails installed after the effective date of this standard, shall be not less than 36 inches (91.5 cm) from the upper surface of the stairrail system to the surface of the tread, in line with the face of the riser at the forward edge of the tread.

(ii) Stairrails installed before the effective date of this standard, shall be not less than 30 inches (76 cm) nor more than 34 inches (86 cm) from the upper surface of the stairrail system to the surface of the tread, in line with the face of the riser at the forward edge of the tread.

(d) Midrails, screens, mesh, intermediate vertical members, or equivalent intermediate structural members, shall be provided between the top rail of the stairrail system and the stairway steps.

(i) Midrails, when used, shall be located at a height midway between the top edge of the stairrail system and the stairway steps.

(ii) Screens or mesh, when used, shall extend from the top rail to the stairway step, and along the entire opening between top rail supports.

(iii) When intermediate vertical members, such as balusters, are used between posts, they shall be not more than 19 inches (48 cm) apart.

(iv) Other structural members, when used, shall be installed such that there are no openings in the stairrail system that are more than 19 inches (48 cm) wide.

(e) Handrails and the top rails of stairrail systems shall be capable of withstanding, without failure, a force of at least 200 pounds (890 n) applied within 2 inches (5 cm) of the top edge, in any downward or outward direction, at any point along the top edge.

(f) The height of handrails shall be not more than 37 inches (94 cm) nor less than 30 inches (76 cm) from the upper surface of the handrail to the surface of the tread, in line with the face of the riser at the forward edge of the tread.

(g) When the top edge of a stairrail system also serves as a handrail, the height of the top edge shall be not more than 37 inches (94 cm) nor less than 36 inches (91.5 cm) from the upper surface of the stairrail system to the surface of the tread, in line with the face of the riser at the forward edge of the tread.

(h) Stairrail systems and handrails shall be so surfaced as to prevent injury to employees from punctures or lacerations, and to prevent snagging of clothing.

(i) Handrails shall provide an adequate handhold for employees grasping them to avoid falling.

(j) The ends of stairrail systems and handrails shall be constructed so as not to constitute a projection hazard.

(k) Handrails that will not be a permanent part of the structure being built shall have a minimum clearance of 3 inches (8 cm) between the handrail and walls, stairrail systems, and other objects.

(l) Unprotected sides and edges of stairway landings shall be provided with guardrail systems. Guardrail system criteria are contained in chapter 296-155 WAC, Part K.

[Statutory Authority: RCW 49.17.040, [49.17.]050 and [49.17.]060. 96-24-051, § 296-155-477, filed 11/27/96, effective 2/1/97. Statutory Authority: Chapter 49.17 RCW. 95-10-016, § 296-155-477, filed 4/25/95, effective 10/1/95; 91-24-017 (Order 91-07), § 296-155-477, filed 11/22/91, effective 12/24/91.]

WAC 296-155-480 Ladders. (1) General. The following requirements apply to all ladders as indicated, including job-made ladders.

(a) Ladders shall be capable of supporting the following loads without failure:

(i) Each self-supporting portable ladder: At least four times the maximum intended load, except that each extra-heavy-duty type 1A metal or plastic ladder shall sustain at least 3.3 times the maximum intended load. The ability of a ladder to sustain the loads indicated in this section shall be determined by applying or transmitting the requisite load to the ladder in a downward vertical direction. Ladders built and tested in conformance with the applicable provisions of appendix A of this part will be deemed to meet this requirement.

(ii) Each portable ladder that is not self-supporting: At least four times the maximum intended load, except that each extra-heavy-duty type 1A metal or plastic ladders shall sustain at least 3.3 times the maximum intended load. The ability of a ladder to sustain the loads indicated in this section shall be determined by applying or transmitting the requisite load to the ladder in a downward vertical direction when the ladder is placed at an angle of 75 1/2 degrees from the horizontal. Ladders built and tested in conformance with the applicable provisions of appendix A will be deemed to meet this requirement.

(iii) Each fixed ladder: At least two loads of 250 pounds (114 kg) each, concentrated between any two consecutive attachments (the number and position of additional concentrated loads of 250 pounds (114 kg) each, determined from anticipated usage of the ladder, shall also be included), plus anticipated loads caused by ice buildup, winds, rigging, and impact loads resulting from the use of ladder safety devices. Each step or rung shall be capable of supporting a single concentrated load of at least 250 pounds (114 kg) applied in the middle of the step or rung. Ladders built in conformance with the applicable provisions of appendix A will be deemed to meet this requirement.

(b) Ladder rungs, cleats, and steps shall be parallel, level, and uniformly spaced when the ladder is in position for use.

(c)(i) Rungs, cleats, and steps of portable ladders (except as provided below) and fixed ladders (including individual-rung/step ladders) shall be spaced not less than 10 inches (25 cm) apart, nor more than 14 inches (36 cm) apart, as measured between centerlines of the rungs, cleats, and steps.

(ii) Rungs, cleats, and steps of step stools shall be not less than 8 inches (20 cm) apart, nor more than 12 inches (31 cm) apart, as measured between centerlines of the rungs, cleats, and steps.

(iii) Rungs, cleats, and steps of the base section of extension trestle ladders shall be not less than 8 inches (20 cm) nor more than 18 inches (46 cm) apart, as measured between centerlines of the rungs, cleats, and steps. The rung spacing on the extension section of the extension trestle ladder shall be not less than 6 inches (15 cm) nor more than 12 inches (31 cm), as measured between centerlines of the rungs, cleats, and steps.

(iv) Cleats on job-made ladders shall be inset into the edges of the side-rails one-half inch, or filler blocks shall be used on the side-rails between the cleats.

(v) Cleats on job-made ladders shall be secured to each rail with three 10d common wire nails or other fasteners of equivalent strength.

(d)(i) The minimum clear distance between the sides of individual-rung/step ladders and the minimum clear distance between the side rails of other fixed ladders shall be 16 inches (41 cm).

(ii) The minimum clear distance between side rails for all portable ladders shall be 11 1/2 inches (29 cm).

(e) The rungs of individual-rung/step ladders shall be shaped such that employees' feet cannot slide off the end of the rungs.

(f)(i) The rungs and steps of fixed metal ladders manufactured after the effective date of this standard, shall be corrugated, knurled, dimpled, coated with skid-resistant material, or otherwise treated to minimize slipping.

(ii) The rungs and steps of portable metal ladders shall be corrugated, knurled, dimpled, coated with skid-resistant material, or otherwise treated to minimize slipping.

(g) Ladders shall not be tied or fastened together to provide longer sections unless they are specifically designed for such use.

(h) A metal spreader or locking device shall be provided on each stepladder to hold the front and back sections in an open position when the ladder is being used.

(i) When splicing is required to obtain a given length of side rail, the resulting side rail must be at least equivalent in strength to a one-piece side rail made of the same material.

(j) Except when portable ladders are used to gain access to fixed ladders (such as those on utility towers, billboards, and other structures where the bottom of the fixed ladder is elevated to limit access), when two or more separate ladders are used to reach an elevated work area, the ladders shall be offset with a platform or landing between the ladders. (The requirements to have guardrail systems with toeboards for falling object and overhead protection on platforms and landings are set forth in chapter 296-155 WAC, Part K.)

(k) Ladder components shall be surfaced so as to prevent injury to an employee from punctures or lacerations, and to prevent snagging of clothing.

(l) Wood ladders shall not be coated with any opaque covering, except for identification or warning labels which may be placed on one face only of a side rail.

(m) The minimum perpendicular clearance between fixed ladder rungs, cleats, and steps, and any obstruction behind the ladder shall be 7 inches (18 cm), except in the case of an elevator pit ladder, for which a minimum perpendicular clearance of 4 1/2 inches (11 cm) is required.

(n) The minimum perpendicular clearance between the center line of fixed ladder rungs, cleats, and steps, and any obstruction on the climbing side of the ladder shall be 30 inches (76 cm), except as provided in (o) of this subsection.

(o) When unavoidable obstructions are encountered, the minimum perpendicular clearance between the centerline of fixed ladder rungs, cleats, and steps, and the obstruction on the climbing side of the ladder may be reduced to 24 inches (61 cm), provided that a deflection device is installed to guide employees around the obstruction.

(p) Through fixed ladders at their point of access/egress shall have a step-across distance of not less than 7 inches (18 cm) nor more than 12 inches (30 cm) as measured from the centerline of the steps or rungs to the nearest edge of the landing area. If the normal step-across distance exceeds 12 inches (30 cm), a landing platform shall be provided to reduce the distance to the specified limit.

(q) Fixed ladders without cages or wells shall have a clear width to the nearest permanent object of at least 15 inches (38 cm) on each side of the centerline of the ladder.

(r) Fixed ladders shall be provided with cages, wells, ladder safety devices, or self-retracting lifelines where the length of climb is less than 24 feet (7.3 m) but the top of the ladder is at a distance greater than 24 feet (7.3 m) above lower levels.

(s) Where the total length of a climb equals or exceeds 24 feet (7.3 m), fixed ladders shall be equipped with one of the following:

(i) Ladder safety devices; or

(ii) Self-retracting lifelines, and rest platforms at intervals not to exceed 150 feet (45.7 m); or

(iii) A cage or well, and multiple ladder sections, each ladder section not to exceed 50 feet (15.2 m) in length. Ladder sections shall be offset from adjacent sections, and landing platforms shall be provided at maximum intervals of 50 feet (15.2 m).

(t) Cages for fixed ladders shall conform to all of the following:

(i) Horizontal bands shall be fastened to the side rails of rail ladders, or directly to the structure, building, or equipment for individual-rung ladders;

(ii) Vertical bars shall be on the inside of the horizontal bands and shall be fastened to them;

(iii) Cages shall extend not less than 27 inches (68 cm), or more than 30 inches (76 cm) from the centerline of the step or rung (excluding the flare at the bottom of the cage), and shall not be less than 27 inches (68 cm) in width;

(iv) The inside of the cage shall be clear of projections;

(v) Horizontal bands shall be spaced not more than 4 feet (1.2 m) on center vertically;

(vi) Vertical bars shall be spaced at intervals not more than 9 1/2 inches (24 cm) on center horizontally;

(vii) The bottom of the cage shall be at a level not less than 7 feet (2.1 m) nor more than 8 feet (2.4 m) above the point of access to the bottom of the ladder. The bottom of the cage shall be flared not less than 4 inches (10 cm) all around within the distance between the bottom horizontal band and the next higher band;

(viii) The top of the cage shall be a minimum of 42 inches (1.1 m) above the top of the platform, or the point of access at the top of the ladder, with provision for access to the platform or other point of access.

(u) Wells for fixed ladders shall conform to all of the following:

(i) They shall completely encircle the ladder;

(ii) They shall be free of projections;

(iii) Their inside face on the climbing side of the ladder shall extend not less than 27 inches (68 cm) nor more than 30 inches (76 cm) from the centerline of the step or rung;

(iv) The inside clear width shall be at least 30 inches (76 cm);

(v) The bottom of the wall on the access side shall start at a level not less than 7 feet (2.1 m) nor more than 8 feet (2.4 m) above the point of access to the bottom of the ladder.

(v) Ladder safety devices, and related support systems, for fixed ladders shall conform to all of the following:

(i) They shall be capable of withstanding without failure a drop test consisting of an 18-inch (41 cm) drop of a 500-pound (226 kg) weight;

(ii) They shall permit the employee using the device to ascend or descend without continually having to hold, push or pull any part of the device, leaving both hands free for climbing;

(iii) They shall be activated within 2 feet (.61 m) after a fall occurs, and limit the descending velocity of an employee to 7 feet/sec. (2.1 m/sec.) or less;

(iv) The connection between the carrier or lifeline and the point of attachment to the body belt or harness shall not exceed 9 inches (23 cm) in length.

(w) The mounting of ladder safety devices for fixed ladders shall conform to the following:

(i) Mountings for rigid carriers shall be attached at each end of the carrier, with intermediate mountings, as necessary, spaced along the entire length of the carrier, to provide the strength necessary to stop employees' falls.

(ii) Mountings for flexible carriers shall be attached at each end of the carrier. When the system is exposed to wind, cable guides for flexible carriers shall be installed at a minimum spacing of 25 feet (7.6 m) and maximum spacing of 40 feet (12.2 m) along the entire length of the carrier, to prevent wind damage to the system.

(iii) The design and installation of mountings and cable guides shall not reduce the design strength of the ladder.

(x) The side rails of through or side-step fixed ladders shall extend 42 inches (1.1 m) above the top of the access level or landing platform served by the ladder. For a parapet ladder, the access level shall be the roof if the parapet is cut to permit passage through the parapet; if the parapet is continuous, the access level shall be the top of the parapet.

(y) For through-fixed-ladder extensions, the steps or rungs shall be omitted from the extension and the extension of the side rails shall be flared to provide not less than 24 inches (61 cm) nor more than 30 inches (76 cm) clearance

between side rails. Where ladder safety devices are provided, the maximum clearance between side rails of the extensions shall not exceed 36 inches (91 cm).

(z) For side-step fixed ladders, the side rails and the steps or rungs shall be continuous in the extension.

(aa) Individual-rung/step ladders, except those used where their access openings are covered with manhole covers or hatches, shall extend at least 42 inches (1.1 m) above an access level or landing platform either by the continuation of the rung spacings as horizontal grab bars or by providing vertical grab bars that shall have the same lateral spacing as the vertical legs of the rungs.

(2) Use. The following requirements apply to the use of all ladders, including job-made ladders, except as otherwise indicated:

(a) When portable ladders are used for access to an upper landing surface, the ladder side rails shall extend at least 3 feet (.9 m) above the upper landing surface to which the ladder is used to gain access; or, when such an extension is not possible because of the ladder's length, then the ladder shall be secured at its top to a rigid support that will not deflect, and a grasping device, such as a grabrail, shall be provided to assist employees in mounting and dismounting the ladder. In no case shall the extension be such that ladder deflection under a load would, by itself, cause the ladder to slip off its support.

(b) Ladders shall be maintained free of oil, grease, and other slipping hazards.

(c) Ladders shall not be loaded beyond the maximum intended load for which they were built, nor beyond their manufacturer's rated capacity.

(d) Ladders shall be used only for the purpose for which they were designed.

(e)(i) Nonself-supporting ladders shall be used at an angle such that the horizontal distance from the top support to the foot of the ladder is approximately one-quarter of the working length of the ladder (the distance along the ladder between the foot and the top support).

(ii) Wood job-made ladders with spliced side rails shall be used at an angle such that the horizontal distance is one-eighth the working length of the ladder.

(iii) Fixed ladders shall be used at a pitch no greater than 90 degrees from the horizontal, as measured to the back side of the ladder.

(f) Ladders shall be used only on stable and level surfaces unless secured to prevent accidental displacement.

(g) Ladders shall not be used on slippery surfaces unless secured or provided with slip-resistant feet to prevent accidental displacement. Slip-resistant feet shall not be used as a substitute for care in placing, lashing, or holding a ladder that is used upon slippery surfaces including, but not limited to, flat metal or concrete surfaces that are constructed so they cannot be prevented from becoming slippery.

(h) Ladders placed in any location where they can be displaced by workplace activities or traffic, such as in passageways, doorways, or driveways, shall be secured to prevent accidental displacement, or a barricade shall be used to keep the activities or traffic away from the ladder.

(i) The area around the top and bottom of ladders shall be kept clear.

(j) The top of a nonself-supporting ladder shall be placed with the two rails supported equally unless it is equipped with a single support attachment.

(k) Ladders shall not be moved, shifted, or extended while occupied.

(l) Ladders shall have nonconductive side rails if they are used where the employee or the ladder could contact exposed energized electrical equipment, except as provided in the following:

(i) Portable metal or other portable conductive ladders shall not be used on or near energized line or equipment except where nonconductive ladders present a greater electrical hazard than conductive ladders. A greater electrical hazard would be static electricity such as might be found in extra high voltage substations.

(ii) All conductive or metal ladders shall be prominently marked and identified as being conductive.

(iii) All conductive or metal ladders shall be grounded when used near energized lines or equipment.

(m) The top or top step of a stepladder shall not be used as a step.

(n) Cross-bracing on the rear section of stepladders shall not be used for climbing unless the ladders are designed and provided with steps for climbing on both front and rear sections.

(o) Ladders shall be inspected by a competent person for visible defects on a periodic basis and after any occurrence that could affect their safe use.

(p) Portable ladders with structural defects, such as, but not limited to, broken or missing rungs, cleats, or steps, broken or split rails, corroded components, or other faulty or defective components, shall either be immediately marked in a manner that readily identifies them as defective, or be tagged with "do not use" or similar language, and shall be withdrawn from service until repaired.

(q) Fixed ladders with structural defects, such as, but not limited to, broken or missing rungs, cleats, or steps, broken or split rails, or corroded components, shall be withdrawn from service until repaired. The requirement to withdraw a defective ladder from service is satisfied if the ladder is either:

(i) Immediately tagged with "do not use" or similar language;

(ii) Marked in a manner that readily identifies it as defective;

(iii) Or blocked (such as with a plywood attachment that spans several rungs).

(r) Ladder repairs shall restore the ladder to a condition meeting its original design criteria, before the ladder is returned to use.

(s) Single-rail ladders shall not be used.

(t) When ascending or descending a ladder, the user shall face the ladder.

(u) Employees shall not ascend or descend ladders while carrying tools or materials that might interfere with the free use of both hands.

(v) When working from a ladder, the ladder shall be secured at both top and bottom.

(w) No type of work shall be performed on a ladder over twenty-five feet from the ground or floor that requires the use of both hands to perform the work, unless a safety belt is worn and the safety lanyard is secured to the ladder.

(x) Any work that requires wearing eye protection, respirators, or handling of pressure equipment shall not be performed from a ladder more than twenty-five feet above the surrounding surface.

[Statutory Authority: RCW 49.17.040, [49.17.]050 and [49.17.]060. 96-24-051, § 296-155-480, filed 11/27/96, effective 2/1/97. Statutory Authority: Chapter 49.17 RCW. 95-10-016, § 296-155-480, filed 4/25/95, effective 10/1/95; 94-15-096 (Order 94-07), § 296-155-480, filed 7/20/94, effective 9/20/94; 91-24-017 (Order 91-07), § 296-155-480, filed 11/22/91, effective 12/24/91; 91-03-044 (Order 90-18), § 296-155-480, filed 1/10/91, effective 2/12/91; 90-09-026 (Order 90-01), § 296-155-480, filed 4/10/90, effective 5/25/90. Statutory Authority: RCW 49.17.040 and 49.17.050. 86-03-074 (Order 86-14), § 296-155-480, filed 1/21/86. Statutory Authority: RCW 49.17.040, 49.17.150, and 49.17.240. 79-08-115 (Order 79-9), § 296-155-480, filed 7/31/79; Order 76-29, § 296-155-480, filed 9/30/76; Order 76-6, § 296-155-480, filed 3/1/76; Order 74-26, § 296-155-480, filed 5/7/74, effective 6/6/74.]

WAC 296-155-48060 Training requirements. The following training provisions clarify the requirements of WAC 296-155-100 (1)(c), regarding the hazards addressed in chapter 296-155 WAC, Part J.

(1)(a) The employer shall provide a training program for each employee using ladders and stairways. The program shall enable each employee to recognize hazards related to ladders and stairways, and shall train each employee in the procedures to be followed to minimize these hazards.

(b) The employer shall ensure that each employee has been trained by a competent person in the following areas, as applicable:

(i) The nature of fall hazards in the work area;

(ii) The correct procedures for erecting, maintaining, and disassembling the fall protection systems to be used;

(iii) The proper construction, use, placement, and care in handling of all stairways and ladders;

(iv) The maximum intended load-carrying capacities of ladders used; and

(v) The standards contained in this part.

(2) Retraining shall be provided for each employee as necessary so that the employee maintains the understanding and knowledge acquired through compliance with this section.

[Statutory Authority: Chapter 49.17 RCW. 91-24-017 (Order 91-07), § 296-155-48060, filed 11/22/91, effective 12/24/91.]

WAC 296-155-48080 Appendix A. This appendix serves as a nonmandatory guideline to assist employers in complying with the ladder loading and strength requirements of WAC 296-155-480 (1)(a). A ladder designed and built in accordance with the applicable national consensus standards, as set forth below, will be considered to meet the requirements of WAC 296-155-480 (1)(a):

** Manufactured portable wood ladders: American National Standards Institute (ANSI) A14.1-1982—American National Standard for Ladders-Portable Wood-Safety Requirements.

** Manufactured portable metal ladders: ANSI A14.2-1982—American National Standard for Ladders—Portable Metal-Safety Requirements.

** Manufactured fixed ladders: ANSI A14.3-1984—American National Standard for Ladders-Fixed-Safety Requirements.

** Job-made ladders: ANSI A14.4-1979—Safety Requirements for Job-Made Ladders.

** Plastic ladders: ANSI A14.5-1982—American National Standard for Ladders-Portable Reinforced Plastic-Safety Requirements.

[Statutory Authority: Chapter 49.17 RCW. 91-24-017 (Order 91-07), § 296-155-48080, filed 11/22/91, effective 12/24/91.]

WAC 296-155-48090 Reserved.

[Statutory Authority: Chapter 49.17 RCW. 91-24-017 (Order 91-07), § 296-155-48090, filed 11/22/91, effective 12/24/91; Order 76-29, Table J-18 (codified as WAC 296-155-48090), filed 9/30/76; Order 76-6, Table J-18, filed 3/1/76. Formerly 296-155-480 (part).]

PART J-1
SCAFFOLDS

WAC 296-155-481 Scope and application. This part applies to all scaffolds used in workplaces covered by this chapter. It does not apply to crane or derrick suspended personnel platforms, which are covered by chapter 296-155 WAC, Part L. The criteria for manually propelled elevating work platforms are set out exclusively in WAC 296-155-487.

The criteria for self-propelled elevating work platforms are set out exclusively in WAC 296-155-488.

The criteria for boom supported elevating work platforms are set out exclusively in WAC 296-155-489.

The criteria for aerial lifts are set out exclusively in WAC 296-155-490.

Additional requirements for forklift supported personnel platforms are set out in WAC 296-155-615 (3)(h).

[Statutory Authority: RCW 49.17.010, [49.17].040, [49.17].050 and [49.17].060. 98-05-046, § 296-155-481, filed 2/13/98, effective 4/15/98. Statutory Authority: Chapter 49.17 RCW. 91-24-017 (Order 91-07), § 296-155-481, filed 11/22/91, effective 12/24/91.]

WAC 296-155-482 Definitions applicable to this part. **"Adjustable suspension scaffold"** means a suspension scaffold equipped with a hoist(s) that can be operated by an employee(s) on the scaffold.

"Bearer (putlog)" means a horizontal transverse scaffold member (which may be supported by ledgers or runners) upon which the scaffold platform rests and which joins scaffold uprights, posts, poles, and similar members.

"Boatswains' chair" means a single-point adjustable suspension scaffold consisting of a seat or sling designed to support one employee in a sitting position.

"Body belt (safety belt)" means a strap with means both for securing it about the waist and for attaching it to a lanyard or lifeline, used only in fall restraint or positioning device systems. A body belt may not be used for fall arrest.

"Body harness" means a design of straps which may be secured about the employee in a manner to distribute the fall arrest forces over at least the thighs, pelvis, waist, chest and shoulders, with means for attaching it to other components of a personal fall arrest system.

"Brace" means a rigid connection that holds one scaffold member in a fixed position with respect to another member, or to a building or structure.

"Bricklayers' square scaffold" means a supported scaffold composed of framed squares which support a platform.

"Carpenters' bracket scaffold" means a supported scaffold consisting of a platform supported by brackets attached to building or structural walls.

"Catenary scaffold" means a suspension scaffold consisting of a platform supported by two essentially horizontal and parallel ropes attached to structural members of a building or other structure. Additional support may be provided by vertical pickups.

"Chimney hoist" means a multipoint adjustable suspension scaffold used to provide access to work inside chimneys. (See "multipoint adjustable suspension scaffold.")

"Cleat" means a structural block used at the end of a platform to prevent the platform from slipping off its supports. Cleats are also used to provide footing on sloped surfaces such as crawling boards.

"Competent person" means one who is capable of identifying existing and predictable hazards in the surroundings or working conditions which are unsanitary, hazardous, or dangerous to employees, and who has authorization to take prompt corrective measures to eliminate them.

"Continuous run scaffold (run scaffold)" means a two-point or multipoint adjustable suspension scaffold constructed using a series of interconnected braced scaffold members or supporting structures erected to form a continuous scaffold.

"Coupler" means a device for locking together the tubes of a tube and coupler scaffold.

"Crawling board (chicken ladder)" means a supported scaffold consisting of a plank with cleats spaced and secured to provide footing, for use on sloped surfaces such as roofs.

"Deceleration device" means any mechanism, such as a rope grab, rip-stitch lanyard, specially-woven lanyard, tearing or deforming lanyard, or automatic self-retracting lifeline lanyard, which dissipates a substantial amount of energy during a fall arrest or limits the energy imposed on an employee during fall arrest.

"Double pole (independent pole) scaffold" means a supported scaffold consisting of a platform(s) resting on cross beams (bearers) supported by ledgers and a double row of uprights independent of support (except ties, guys, braces) from any structure.

"Equivalent" means alternative designs, materials or methods to protect against a hazard which the employer can demonstrate will provide an equal or greater degree of safety for employees than the methods, materials or designs specified in the standard.

"Exposed power lines" means electrical power lines which are accessible to employees and which are not shielded from contact. Such lines do not include extension cords or power tool cords.

"Eye or eye splice" means a loop with or without a thimble at the end of a wire rope.

"Fabricated decking and planking" means manufactured platforms made of wood (including laminated wood, and solid sawn wood planks), metal or other materials.

"Fabricated frame scaffold (tubular welded frame scaffold)" means a scaffold consisting of a platform(s) supported on fabricated end frames with integral posts, horizontal bearers, and intermediate members.

"Failure" means load refusal, breakage, or separation of component parts. Load refusal is the point where the ultimate strength is exceeded.

"Falling object protection" means those devices, systems, structures, work practices or other means intended to prevent tools, materials, debris and other objects from falling or to deflect or contain falling objects in order to prevent them striking workers below.

"Float (ship) scaffold" means a suspension scaffold consisting of a braced platform resting on two parallel bearers and hung from overhead supports by ropes of fixed length.

"Form scaffold" means a supported scaffold consisting of a platform supported by brackets attached to formwork.

"Guardrail system" means a vertical barrier, consisting of, but not limited to, toprails, midrails, and posts, erected to prevent employees from falling off a scaffold platform or walkway to lower levels.

"Hoist" means a manual or power-operated mechanical device to raise or lower a suspended scaffold.

"Horse scaffold" means a supported scaffold consisting of a platform supported by construction horses (saw horses). Horse scaffolds constructed of metal are sometimes known as trestle scaffolds.

"Independent pole scaffold" (see "double pole scaffold").

"Interior hung scaffold" means a suspension scaffold consisting of a platform suspended from the ceiling or roof structure by fixed length supports.

"Ladder jack scaffold" means a supported scaffold consisting of a platform resting on brackets attached to ladders.

"Ladder stand" means a mobile, fixed-size, self-supporting ladder consisting of a wide flat tread ladder in the form of stairs.

"Landing" means a platform at the end of a flight of stairs.

"Large area scaffold" means a pole scaffold, tube and coupler scaffold, systems scaffold, or fabricated frame scaffold erected over substantially the entire work area. For example: A scaffold erected over the entire floor area of a room.

"Lean-to scaffold" means a supported scaffold which is kept erect by tilting it toward and resting it against a building or structure.

"Ledger" - see runner.

"Lifeline" means a component consisting of a flexible line that connects to an anchorage at one end to hang vertically (vertical lifeline), or that connects to anchorages at both ends to stretch horizontally (horizontal lifeline), and which serves as a means for connecting other components of a personal fall arrest system to the anchorage.

"Lower levels" means areas below the level where the employee is located and to which an employee can fall. Such areas include, but are not limited to, ground levels, floors, roofs, ramps, runways, excavations, pits, tanks, materials, water, and equipment.

"Masons' adjustable supported scaffold" (see "self-contained adjustable scaffold").

"Masons' multipoint adjustable suspension scaffold" means a continuous run suspension scaffold designed and used for masonry operations.

"Maximum intended load" means the total load of all persons, equipment, tools, materials, transmitted loads, and other loads reasonably anticipated to be applied to a scaffold or scaffold component at any one time.

"Mobile scaffold" means a powered or unpowered, portable, caster or wheel-mounted supported scaffold.

"Multilevel suspended scaffold" means a two-point or multipoint adjustable suspension scaffold with a series of platforms at various levels resting on common stirrups.

"Multipoint adjustable suspension scaffold" means a suspension scaffold consisting of a platform(s) which is suspended by more than two ropes from overhead supports and equipped with means to raise and lower the platform to desired work levels. Such scaffolds include chimney hoists.

"Needle beam scaffold" means a platform suspended from needle beams.

"Open sides and ends" means the edges of a platform that are more than 14 inches (36 cm) away horizontally from a sturdy, continuous, vertical surface (such as a building wall) or a sturdy, continuous horizontal surface (such as a floor), or a point of access. Exception: For plastering and lathing operations the horizontal threshold distance is 18 inches (46 cm).

"Outrigger" means the structural member of a supported scaffold used to increase the base width of a scaffold in order to provide support for and increased stability of the scaffold.

"Outrigger beam (thrustout)" means the structural member of a suspension scaffold or outrigger scaffold which provides support for the scaffold by extending the scaffold point of attachment to a point out and away from the structure or building.

"Outrigger scaffold" means a supported scaffold consisting of a platform resting on outrigger beams (thrustouts) projecting beyond the wall or face of the building or structure, the inboard ends of which are secured inside the building or structure.

"Overhand bricklaying" means the process of laying bricks and masonry units such that the surface of the wall to be jointed is on the opposite side of the wall from the mason, requiring the mason to lean over the wall to complete the work. It includes mason tending and electrical installation incorporated into the brick wall during the overhand bricklaying process.

"Personal fall arrest system" means a system used to arrest an employee's fall. It consists of an anchorage, connectors, and body harness and may also include a lanyard, deceleration device, lifeline, or combinations of these.

"Platform" means a work surface elevated above lower levels. Platforms can be constructed using individual wood planks, fabricated planks, fabricated decks, and fabricated platforms.

"Pole scaffold" (see definitions for "single-pole scaffold" and "double (independent) pole scaffold").

"Power operated hoist" means a hoist which is powered by other than human energy.

"Pump jack scaffold" means a supported scaffold consisting of a platform supported by vertical poles and movable support brackets.

"Putlog" - see bearer.

"Qualified" means one who, by possession of a recognized degree, certificate, or professional standing, or who by extensive knowledge, training, and experience, has successfully demonstrated his/her ability to solve or resolve problems related to the subject matter, the work, or the project.

"Rated load" means the manufacturer's specified maximum load to be lifted by a hoist or to be applied to a scaffold or scaffold component.

"Repair bracket scaffold" means a supported scaffold consisting of a platform supported by brackets which are secured in place around the circumference or perimeter of a chimney, stack, tank or other supporting structure by one or more wire ropes placed around the supporting structure.

"Ribbon" - see runner.

"Roof bracket scaffold" means a rooftop supported scaffold consisting of a platform resting on angular-shaped supports.

"Runner (ledger or ribbon)" means the lengthwise horizontal spacing or bracing member which may support the bearers.

"Scaffold" means any temporary elevated platform (supported or suspended) and its supporting structure (including points of anchorage), used for supporting employees or materials or both.

"Self-contained adjustable scaffold" means a combination supported and suspension scaffold consisting of an adjustable platform(s) mounted on an independent supporting frame(s) not a part of the object being worked on, and which is equipped with a means to permit the raising and lowering of the platform(s). Such systems include rolling roof rigs, rolling outrigger systems, and some masons' adjustable supported scaffolds.

"Shore scaffold" means a supported scaffold which is placed against a building or structure and held in place with props.

"Single-point adjustable suspension scaffold" means a suspension scaffold consisting of a platform suspended by one rope from an overhead support and equipped with means to permit the movement of the platform to desired work levels.

"Single-pole scaffold" means a supported scaffold consisting of a platform(s) resting on bearers, the outside ends of which are supported on runners secured to a single row of posts or uprights, and the inner ends of which are supported on or in a structure or building wall.

"Stair tower (scaffold stairway/tower)" means a tower comprised of scaffold components and which contains internal stairway units and rest platforms. These towers are used to provide access to scaffold platforms and other elevated points such as floors and roofs.

"Stall load" means the load at which the prime-mover of a power-operated hoist stalls or the power to the prime-mover is automatically disconnected.

"Step, platform, and trestle ladder scaffold" means a platform resting directly on the rungs of step ladders or trestle ladders.

"Stilts" means a pair of poles or similar supports with raised footrests, used to permit walking above the ground or working surface.

"Stonesetters' multipoint adjustable suspension scaffold" means a continuous run suspension scaffold designed and used for stonesetters' operations.

"Supported scaffold" means one or more platforms supported by outrigger beams, brackets, poles, legs, uprights, posts, frames, or similar rigid support.

"Suspension scaffold" means one or more platforms suspended by ropes or other nonrigid means from an overhead structure(s).

"System scaffold" means a scaffold consisting of posts with fixed connection points that accept runners, bearers, and diagonals that can be interconnected at predetermined levels.

"Tank builders' scaffold" means a supported scaffold consisting of a platform resting on brackets that are either directly attached to a cylindrical tank or attached to devices that are attached to such a tank.

"Toeboard" means a barrier installed at the outermost edge of a walking/working surface to prevent objects from falling onto workers below.

"Top plate bracket scaffold" means a scaffold supported by brackets that hook over or are attached to the top of a wall. This type of scaffold is similar to carpenters' bracket scaffolds and form scaffolds and is used in residential construction for setting trusses.

"Tube and coupler scaffold" means a supported or suspended scaffold consisting of a platform(s) supported by tubing, erected with coupling devices connecting uprights, braces, bearers, and runners.

"Tubular welded frame scaffold" (see "fabricated frame scaffold").

"Two-point suspension scaffold (swing stage)" means a suspension scaffold consisting of a platform supported by hangers (stirrups) suspended by two ropes from overhead supports and equipped with means to permit the raising and lowering of the platform to desired work levels.

"Unstable objects" means items whose strength, configuration, or lack of stability may allow them to become dislocated and shift and therefore may not properly support the loads imposed on them. Unstable objects do not constitute a safe base support for scaffolds, platforms, or employees. Examples include, but are not limited to, barrels, boxes, loose brick, and concrete blocks.

"Vertical pickup" means a rope used to support the horizontal rope in catenary scaffolds.

"Walkway" means a portion of a scaffold platform used only for access and not as a work level.

"Window jack scaffold" means a platform resting on a bracket or jack which projects through a window opening.

[Statutory Authority: RCW 49.17.010, [49.17].040, [49.17].050 and [49.17].060. 98-05-046, § 296-155-482, filed 2/13/98, effective 4/15/98.]

WAC 296-155-487 Manually propelled elevating work platforms. (1) All applicable rules for design, construction, maintenance, operation, testing and use of manually propelled elevating work platforms shall be in accordance with ANSI A92.3-1990.

(2) General requirements.

(a) Any manually propelled elevating work platform, when raised to its maximum working height, on level ground, shall be capable of sustaining, without reaching instability, a minimum horizontal test force of fifty pounds or fifteen percent of the rated capacity, whichever is greater, applied to any point on the perimeter of the platform while the platform is carrying the rated work load.

(b) Any manually propelled elevating work platform, unless designed for such use by the manufacturer, shall not be used on an inclined surface.

(c) Any work platform designed by the manufacturer to be operated on an inclined surface shall also be capable of passing the stability tests outlined in (a) of this subsection while on such a surface. Procedures for maintaining stability shall be clearly outlined in the special warnings section of the operating instructions and users shall follow these instructions.

(d) If outriggers or stabilizers must be employed to meet the tests for stability outlined in (a) of this subsection, the operating instructions shall require their use and such outriggers or stabilizers shall be provided and used.

(e) The platform width shall not be less than eighteen inches and shall be provided with a surface to minimize slipping.

(f) The platform shall be provided with a guardrail or other structure around its upper periphery and the guardrail shall be approximately forty-two inches high, plus or minus three inches, with a midrail approximately midway between the top rail and the platform surface.

(i) The guardrail system shall be designed and constructed to withstand a load of twenty-five pounds per linear foot applied in a horizontal direction to the top rail or midrail.

(ii) The top rail or midrail shall withstand a concentrated load of three hundred pounds applied vertically to the top of either rail midway between the supporting posts.

(iii) Guardrail terminal posts shall withstand two hundred pounds applied in any direction at the top of the post.

(g) The platform shall be provided with four-inch (nominal dimension) toeboards on all sides.

(h) Toeboards may be omitted at the access openings.

(i) The configuration of the work platform shall include access for personnel to use in reaching the platform deck when it is in the lowered position.

(i) Any access system used in this way shall have rungs or steps located on uniform centers not to exceed sixteen inches.

(ii) Steps or rungs shall be provided with a face that minimizes slipping.

(3) Safety factor specifications.

(a) Where the platform is supporting its rated work load by a system of wire ropes or chains, or both, the safety factor of the wire rope or chain shall not be less than eight to one, based on ultimate strength.

(b) All critical components of a hydraulic or pneumatic system used in a work platform shall have a bursting strength that exceeds the pressure attained when the system is subjected to the equivalent of four times the rated work load. (Critical components are those in which failure would result in a free descent.)

(c) All noncritical hydraulic components shall have a bursting strength safety factor of at least two to one.

(4) Fail safe requirements.

(a) Where the elevation of the platform is accomplished by an electromechanical assembly, the system shall be designed to prevent free descent in the event of a generator or power failure.

(b) Where the elevation of the platform is accomplished by a hydraulic or pneumatic cylinder assembly, the system shall be so equipped as to prevent free descent in the event of failure of a hydraulic or pneumatic line.

(c) Where the platform is horizontally extendable beyond the base of the machine, the system shall be so equipped as to prevent descent in the event of failure of a hydraulic or pneumatic line, wire rope, or chain.

(d) Where the elevation of the platform is accomplished by a single hoist cable, the system shall be protected by a broken-cable safety device which will prevent free descent of the platform.

(e) Where the elevation of the platform is accomplished by a manual-mechanical or manual-hydraulic assembly, the considerations established above shall apply.

(f) The control system shall be designed so that a single malfunction in the control system will not result in unintended machine motion.

(g) Hydraulically or pneumatically actuated outriggers or stabilizers, or both, shall be so constructed as to prevent their retraction in the event of failure of a hydraulic or pneumatic line.

(5) Emergency lowering means. Any work platform equipped with a powered elevating assembly shall be supplied with clearly marked emergency lowering means readily accessible from ground or floor level.

(6) Guarding. Mechanical power transmission apparatus shall be guarded in accordance with chapter 296-806 WAC, Machine safety.

(7) Directional controls.

(a) All directional controls shall be marked for the direction they control and shall be of the type which automatically returns to the "off" or the neutral position when released.

(b) Controls shall be protected against inadvertent operation.

(8) Motor requirements.

(a) Fuel lines of internal-combustion-engine-powered work platforms shall be supported to minimize chafing and positioned to minimize exposure to engine exhaust heat. Liquid fuel lines shall be hard lines except where isolation from vibration requires a flexible connection.

(b) LP-gas engine fuel systems shall comply with the American National Standard for Storage and Handling of Liquified Petroleum Gases, ANSI/NFPA 58-1995.

(c) The exhaust system shall be provided with a muffler that is positioned to minimize exposure to noise and exhaust gas of the operators and personnel located in proximity to the unit.

(9) Prevention of lateral movement. Each work platform shall be provided with locking screws, floor locks, wheel-locking mechanisms, or other means of preventing unintended lateral motions while in use.

(10) Specifications display. The following information shall be displayed on all work platforms in as permanent and as visible a manner as practical:

(a) Warnings, cautions, or restrictions for safe operation in accordance with American National Standard Specifications for Accident Prevention Signs, ANSI Z535.2-1991.

(b) Make, model, serial number, and manufacturer's name and address.

(c) Rated work load.

(d) Maximum platform height.

(e) Nominal voltage rating of batteries or rated voltage of AC line.

(f) Statement of the need for the operator's familiarity with the work platform before it is used.

(11) Alternative configuration statement. When a work platform is designed with alternative configurations:

(a) The manufacturer shall clearly describe these alternatives, including the rated capacity in each situation.

(b) If the rated work load of a platform is the same in any designed configuration, these additional descriptions are not necessary.

(12) Insulation marking. A statement of whether or not the work platform is electrically insulated. If insulated, the level of protection and the applicable test standard shall be stated in accordance with ANSI A92.2-1990.

(13) Maintenance and operating manuals requirement. An operating and maintenance manual(s) shall be provided with each work platform and shall contain:

(a) Descriptions, specifications, and ratings of the work platform, including the data specified in subsection (10) of this section.

(b) The maximum hydraulic and pneumatic systems pressure and the maximum voltage of the electrical systems which are part of the work platform.

(c) Instructions regarding operation and maintenance.

(d) Replacement part(s) information.

(14) Rated load display. The rated work load shall be clearly displayed at each entrance to the work platform.

(15) Management responsibilities.

(a) Employers responsibilities shall be in accordance with ANSI A92.3-1990.

(b) Only trained and authorized personnel shall be permitted to operate the work platform.

(c) Work platforms that are not in safe operating condition shall be removed from service until repaired.

(d) Repairs shall be made by a qualified person in conformance with the manufacturer's operating and maintenance manuals.

(e) Operators shall be trained in care and use before operation, care and use during operation, horizontal relocation, and additional requirements as specified in ANSI A92.3-1990.

(f) Modifications or alterations of work platforms shall be made only with written permission of the manufacturer or any other equivalent entity.

[Statutory Authority: RCW 49.17.010, 49.17.040, 49.17.050, and 49.17.060. 04-14-028, § 296-155-487, filed 6/29/04, effective 1/1/05; 98-05-046, § 296-155-487, filed 2/13/98, effective 4/15/98.]

WAC 296-155-488 Self propelled elevating work platforms. (1) All applicable rules for design, construction, maintenance, operation, testing and use of self propelled elevating work platforms shall be in accordance with ANSI A92.6-1990.

(2) Minimum rated work load.

(a) The minimum rated work load of work platforms shall not be less than two hundred fifty pounds.

(b) All structural load-supporting elements of the work platform shall have a structural safety factor of not less than two based on the minimum yield strength of the material.

(c) All structural load-supporting elements of the work platform that are made of nonductile material (such as cast iron and fiberglass) shall have a structural safety factor of not less than five based on the minimum ultimate strength of the material.

(d) Design and stability tests shall be in accordance with ANSI A92.6-1990.

(e) Each production unit on level ground shall sustain a load test with a platform load at least one hundred fifty percent of the rated capacity imposed. The test shall include the movement of the platform through its entire range of motion.

(3) Driving interlock.

(a) The unit shall use interlock means that will prevent driving the unit unless the platform height, platform configuration, or any combination of these, are adjusted to meet the stability test requirements.

(b) A work platform limited in driveable height by the interlock means may be elevated and used while stationary up to the maximum platform heights at which it will maintain stability during the following static test. At the maximum platform height, on level ground, with the platform carrying the rated work load, apply a horizontal test force of one hundred fifty pounds or fifteen percent of the rated platform load (whichever is greater) at the point on the perimeter of the platform most likely to cause overturning.

(4) Platform outrigger interlocks. Where outriggers, stabilizers, or extendable axles are required to meet the side load test, interlocks shall prevent the platform from being raised above the height at which these devices are required unless the required devices are extended. Interlocks shall also prevent the retraction of these devices while the platform is above that level.

(5) Platform requirement.

(a) A guardrail or other structure shall be provided around its upper periphery, which shall be approximately forty-two inches plus or minus three inches in height, a midrail, and toeboards which shall be not less than four inches high (nominal dimension). Guardrail and midrail chains, or the equivalent, may be substituted across an access opening. Toeboards may be omitted at the access opening.

(b) The work platform shall have a minimum width of eighteen inches. Proper access shall be provided for personnel to use in reaching the platform deck when it is in the lowered position.

(c) A floor surface shall be provided for both the platform and the access that will minimize slipping.

(6) System safety factors.

(a) When the platform supports its rated work load by a system of wire ropes or chains, or both, the safety factor of the wire rope or chains shall not be less than eight to one, based on ultimate strength.

(b) All critical hydraulic components, all pneumatic components, and all hoses of hydraulic or pneumatic systems shall have a minimum bursting strength of at least four times the operating pressure for which the system is designed.

(c) Noncritical hydraulic components shall have a minimum bursting strength of at least twice the operating pressure for which the system is designed.

(7) Safety design requirements.

(a) Where the elevation of the platform is accomplished by an electromechanical assembly, the system shall be designed to prevent free descent in the event of a generator or power failure.

(b) Where the elevation of the platform is accomplished by a hydraulic or pneumatic cylinder assembly, the system shall be so equipped as to prevent free descent in the event of a hydraulic or pneumatic line failure.

(c) Where the platform is horizontally extendable beyond the base of the machine, the system shall be so equipped as to prevent descent in the event of a hydraulic or pneumatic line failure.

(d) Where the elevation of the platform is accomplished by a single hoist cable, the system shall be protected by a broken-cable safety device that will prevent free descent of the platform.

(e) In addition to the primary operator controls, the work platform shall be equipped with an emergency stop device located at the primary control station that will deactivate all powered functions.

(f) Hydraulically or pneumatically actuated outriggers or stabilizers, or both, shall be designed to prevent their retraction in the event of a hydraulic or pneumatic line failure.

(g) Any work platform equipped with a powered elevating assembly shall be supplied with clearly marked emergency lowering means readily accessible from ground level.

(h) Mechanical power transmission apparatus shall be guarded in accordance with chapter 296-806 WAC, Machine safety.

(8) Directional controls.

(a) Directional controls shall move in the direction of the function they control. The controls shall be of the type that automatically return to the off or the neutral position when released.

(b) Such controls shall be protected against inadvertent operation and shall be clearly marked.

(9) Engine requirement.

(a) Fuel lines of internal-combustion-engine-powered work platforms shall be supported to keep chafing to a minimum. They shall be located to keep exposure to engine and exhaust heat to a minimum.

(b) Liquid fuel lines shall be hard except where flexible connections are required for isolation from vibration.

(c) LP gas fuel systems shall use flexible LP gas hose or hard lines.

(d) Exhaust lines shall be equipped with mufflers. The lines shall be located to minimize the exposure of noise and fumes to operators and personnel near the units.

(10) Each work platform shall be equipped with a mechanical parking brake, which will hold the unit on any slope it is capable of climbing. Wheel chocks shall be installed before using an aerial lift on an incline, provided they can be safely installed.

(11) Specifications display. The following information shall be displayed on all work platforms in a clearly visible, accessible area and in as permanent a manner as possible:

(a) Warnings, cautions, or restrictions for safe operation in accordance with ANSI Z535.2-1991.

(b) Make, model, serial number, and manufacturer's name and address.

(c) Rated work load.

(d) Maximum platform height.

(e) Nominal voltage of the batteries if battery powered.

(f) A notice to study the operating/maintenance manual before using the equipment.

(g) Alternative configuration statement. If a work platform is susceptible to several alternative configurations, then the manufacturer shall clearly describe these alternatives, including the rated capacity in each situation. If the rated work load of a work platform is the same in any configuration, these additional descriptions are not necessary.

(h) A clear statement of whether or not the platform and its enclosure are electrically insulated. If insulated, the level of protection and the applicable test standard shall be stated, in accordance with ANSI 92.2-1990.

(i) The rated work load shall be clearly displayed at each entrance to the platform.

(12) Lift manual requirement. Each work platform shall be provided with an appropriate manual. The manual shall contain:

(a) Descriptions, specifications, and ratings of the work platform, including the data specified in subsection (11)(h) and (i) of this section.

(b) The maximum system pressure and the maximum voltage of the electrical systems that are part of the work platform.

(c) Instructions regarding operation, maintenance, and weld specifications.

(d) Replacement parts information.

(13) Inspection and maintenance.

(a) Each work platform shall be inspected, maintained, repaired and kept in proper working order in accordance with the manufacturer's maintenance and repair manuals.

(b) Any work platform not in safe operating condition shall be removed from service until it is repaired.

(c) All repairs shall be made by a qualified service person in conformance with the manufacturer's maintenance and repair manuals.

(14) Operator requirements. Only trained and authorized personnel shall be permitted to operate the work platform. Before using the work platform, the operator shall:

(a) Read and understand the manufacturer's operating instructions and safety rules, and be trained by a qualified person on the contents of the manufacturer's instructions and safety rules.

(b) Read and understand all decals, warnings, and instructions on the work platform.

(c) On a daily basis, before the work platform is used, it shall be given a thorough inspection, which shall include:

(i) Inspection for defects such as cracked welds, hydraulic leaks, damaged control cable, loose wire connections, and tire damage.

(ii) Inspection of functional controls for proper operation.

(d) Any suspect items discovered through inspection shall be carefully examined and a determination made by a qualified service person as to whether they constitute a safety hazard. All unsafe items shall be corrected before further use of the work platform.

(e) Before the work platform is used, the operator shall survey the area for hazards such as:

(i) Untamped earth fills.

(ii) Ditches.

(iii) Dropoffs or holes.

(iv) Bumps and floor obstructions.

(v) Debris.

(vi) Overhead obstructions and high-voltage conductors.

(vii) Other possible hazardous conditions.

(15) Requirement for operations. The work platform shall be used only in accordance with the Manufacturer's Operating Instructions and Safety Rules, ANSI A92.6-1990, and this standard.

(a) Only trained and authorized personnel shall be permitted to operate the work platform.

(b) Before each elevation of the work platform, the operator shall:

(i) Check for overhead obstructions and high-voltage conductors. A minimum distance of ten feet from energized high-voltage conductors shall be maintained at all times between the conductors and the operator and platform equipment.

(ii) Ensure that the work platform is elevated only on a firm and level surface.

(iii) Ensure that the load and its distribution on the platform are in accordance with the manufacturer's rated capacity. The manufacturer's recommended load limits shall never be exceeded.

(iv) Ensure that outriggers and stabilizers are used if the manufacturer's instructions require their use.

(v) Ensure that guardrails are properly installed, and gates or openings are closed.

(c) Before and during driving while the platform is elevated, the operator shall:

(i) Be required to look in the direction of, and keep a clear view of, the path of travel and assure that the path of travel is firm and level.

(ii) Maintain a safe distance from obstacles, debris, dropoffs, holes, depressions, ramps, or other hazards to safe elevated travel.

(iii) Maintain a safe distance from overhead obstacles.

(d) The operator shall limit travel speed according to conditions. Conditions to be observed are: Ground surface, congestion, slope, location of personnel, and other factors that may create a hazard of collision or injury to personnel.

(e) Stunt driving and horseplay shall not be permitted.

(f) Personnel shall maintain a firm footing on the platform while working thereon unless they are secured by safety harness and lanyard devices fixed to manufacturer-approved hard points. Use of railings or planks, ladders or any other device on the work platform for achieving additional height shall be prohibited.

(g) The operator shall immediately report defects or malfunctions which become evident during operation and shall stop use of the work platform until correction has been made.

(h) Altering or disabling of safety devices or interlocks shall be prohibited.

(i) Care shall be taken to prevent ropes, electric cords, hoses, etc., from tangling with the work platform when the platform is being elevated, lowered, or moved.

(j) Work platform rated capacities shall not be exceeded when loads are transferred to the platform at elevated heights.

(k) The operator shall ensure that the area surrounding the work platform is clear of personnel and equipment before lowering the platform.

(16) Fuel tanks shall not be filled while the engine is running. Spillage shall be avoided.

(17) Batteries shall not be charged except in an open, well-ventilated area, free of flame, smoking, spark, or fire.

(18) Modifications. All modifications and alterations to work platforms shall be certified in writing as being in conformance with ANSI A92.6-1990 by the manufacturer or any equivalent entity, such as a nationally recognized testing laboratory.

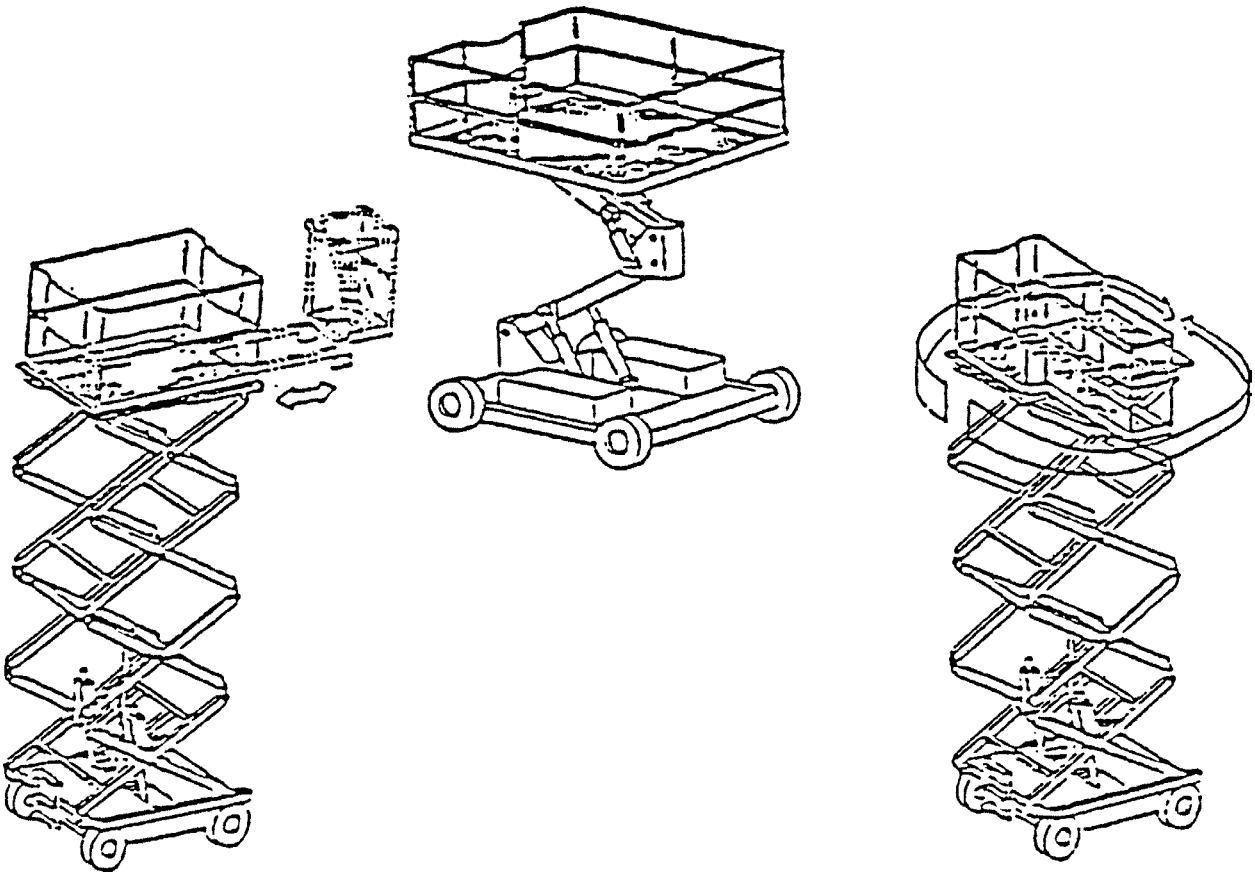

Fig. 1
Examples of Work Platforms

[Statutory Authority: RCW 49.17.010, 49.17.040, 49.17.050, and 49.17.060. 04-14-028, § 296-155-488, filed 6/29/04, effective 1/1/05; 98-05-046, § 296-155-488, filed 2/13/98, effective 4/15/98.]

WAC 296-155-489 Boom supported elevating work platforms. (1) All applicable rules for design, construction, maintenance, operation, testing and use of boom supported elevating work platforms shall be in accordance with ANSI A92.5-1992.

(2) Minimum rated work load. The minimum rated work load of a work platform shall be three hundred pounds. Either single or multiple ratings may be used.

(a) Work platforms with single ratings shall include means which clearly present the rated work load to the operator at the platform control station.

(b) Work platforms having multiple configurations with multiple ratings shall have means which clearly describe the rated work load of each configuration to the operator at the platform control station. Examples of multiple configurations are:

(i) Outriggers extended to firm footing versus outriggers not extended.

(ii) Large platform versus small platform.

(iii) Extendable boom retracted versus extended.

(iv) Boom elevated versus lowered.

(v) Extendable axles extended versus retracted.

(3) Boom angle indicator: When the rated capacity of the alternate configuration depends on the angle the boom makes with the horizontal, the manufacturer shall install means by which that angle can be determined. Such means shall be clearly displayed to the operator at the platform control station.

(4) Structural safety.

(a) All load-supporting structural elements of the work platform shall have a structural safety factor of not less than

two to one based on the minimum yield strength of the materials used.

(b) The load-supporting structural elements of the work platform that are made of nonductile material which will not deform plastically before breaking shall have a structural safety factor of not less than five to one based on the minimum ultimate strength of the materials used.

(c) The design stress used in determining the structural safety factor shall be the maximum stresses developed within the element with the machine operating at its rated work load, used in the type of service for which it was designed, and operated in accordance with manufacturer's operation instructions.

(d) The design stress shall include the effects of stress concentration and dynamic loading as shown in ANSI A92.5-1992.

(5) Platform stability.

(a) Each work platform shall be capable of maintaining stability while sustaining a static load equal to one and one-third times its rated work load, concentrated anywhere twelve inches inside the perimeter of the platform, throughout its entire range of motion while on a slope of five degrees from the horizontal in the direction most likely to cause overturning.

(i) If having the outriggers, stabilizers, or extendable axles in contact with the supporting surface is part of the normal configuration to meet the stability requirements, they shall be extended.

(ii) A visual inspection shall be made to determine whether this test has produced an adverse effect on any component.

(b) Each work platform shall sustain on level ground a test load equal to one and one-half times its rated work load throughout the entire range of motion in which the boom can be placed.

(i) The test load shall be placed with its center of gravity twelve inches inboard from the guardrail while the unit is in the least stable position.

(ii) The work platform shall remain stable during this test.

(iii) A visual inspection shall be made to determine whether this test has produced an adverse effect on any component.

(c) Each work platform shall be capable of maintaining stability when positioned on a five degree slope in its backward stability configuration in the direction and condition most likely to cause overturning, while sustaining a horizontal force of one hundred fifty pounds or fifteen percent of rated capacity, whichever is greater, applied to the upper perimeter of the platform in the direction most likely to cause overturning (see Fig. 1). Note that the most adverse condition may be with zero or with rated work load (concentrated one foot inside perimeter of platform), depending on basket configuration.

(i) If having the outriggers, stabilizers, or extendable axles in contact with the supporting surface is part of the normal configuration to meet stability requirements, they shall be extended.

(ii) A visual inspection shall be made to determine whether this test has produced an adverse effect on any component.

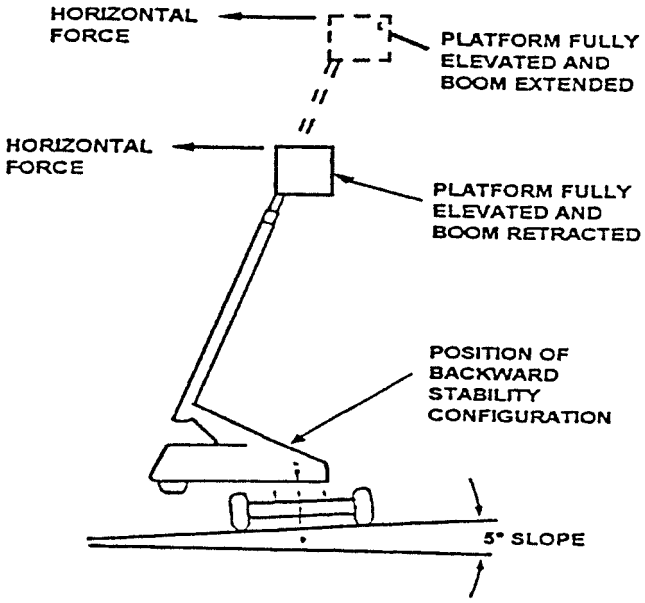

(6) Work platform design requirement. The work platform shall be provided with a guardrail or other structure approximately forty-two inches plus or minus three inches high around its upper periphery, with a midrail, and with toeboards not less than four inches high. Guardrails and midrail chains or the equivalent may be substituted across an access opening.

(a) All stepping, standing, and working surfaces shall be skid resistant.

(b) Attachment points shall be provided for a body belt and lanyard for each person occupying the platform.

(7) Work platform controls. Work platforms shall have both primary and secondary controls.

(a) Primary controls shall be readily accessible to the operator on the platform.

(b) Secondary controls shall be designed to override the primary controls and shall be readily accessible from ground level.

(c) Both primary and secondary controls shall be clearly marked, using permanent legible identification which can be easily understood.

(d) All directional controls shall move in the direction of the function which they control when possible, and shall be of the type which automatically returns to the "off" or the neutral position when released.

(e) Such controls shall be protected against inadvertent operation.

(8) Outrigger interlocks. Where the work platform is equipped with outriggers, stabilizers, or extendable axles, interlocks shall be provided to ensure that the platform cannot be positioned beyond the maximum travel height unless the outriggers, stabilizers, or extendable axles are properly set. Control circuits shall ensure that the driving motor(s) cannot be activated unless the outriggers or stabilizers are disengaged and the platform has been lowered to the maximum travel height (MTH).

(9) Auxiliary operating means: All work platforms shall be provided with an auxiliary means of lowering, retracting, and rotating in the event of primary power loss.

(10) Emergency stop: All work platforms shall be equipped with an emergency stop device, readily accessible to the operator, which will effectively de-energize all powered systems in case of a malfunction.

(11) Tilt alarm: All work platforms shall be fitted with an alarm or other suitable warning at the platform, which will be activated automatically when the machine base is more than five degrees out of level in any direction.

(12) System safety factors.

(a) Where the platform is supporting its rated work load by a system of wire ropes or lift chains, or both, the safety factor of the wire rope or chain shall not be less than eight to one, based on ultimate strength.

(b) All critical components and hoses of hydraulic and pneumatic systems shall have a minimum bursting strength of four times the operating pressure for which the system is designed.

(c) Noncritical components shall have a minimum bursting strength of two times the operating pressure for which the system is designed.

(d) Critical components are defined as those in which a malfunction would result in a free descent of the platform.

(13) Failsafe requirements.

(a) Where the elevation of the platform is accomplished by an electromechanical assembly, the system shall be so designed as to prevent free descent in the event of a generator or power failure.

(b) Where the elevation of the platform is accomplished by a hydraulic or pneumatic cylinder assembly, the system shall be so equipped as to prevent free descent in the event a hydraulic or pneumatic line bursts.

(c) Hydraulically or pneumatically actuated outriggers or stabilizers, or both, shall be so designed as to prevent their retraction in the event a hydraulic or pneumatic line bursts.

(14) Engine requirement.

(a) Fuel lines of internal-combustion-engine-powered work platforms shall be supported to keep chafing to a minimum and located to keep exposure to engine and exhaust heat to a minimum.

(b) Liquid fuel lines shall be hard except where flexible connections are required for isolation from vibration.

(c) LP gas fuel systems shall use flexible LP gas hose or hard lines.

(d) Exhaust lines shall be equipped with mufflers and shall be located to minimize the exposure to noise and fumes of operators and personnel located in the proximity of such units.

(15) Specifications display. There shall be displayed on all work platforms, in a permanent manner, at a readily visible location, the following information:

(a) Special warnings, cautions, or restrictions necessary for safe operation in accordance with ANSI Z535.2-1991.

(b) Make, model, serial number, and manufacturer's name and address.

(c) Rated work load.

(d) Maximum platform height and maximum travel height.

(e) Reference to studying operating instructions in manual before use.

(f) Alternative configuration statement. If a work platform is capable of several alternative configurations and loads, the alternatives shall be clearly described.

(g) A clear statement of whether or not the platform and its enclosure are electrically insulated. If they are electrically insulated, the voltage at which the platform is rated and the applicable test standard shall be stated.

(h) The rated work load shall be clearly displayed at each entrance to the platform and the operator control station.

(16) Lift manual requirements. Each work platform shall be provided with a manufacturer's manual(s) containing the following information:

(a) Descriptions, specifications, and ratings of the work platform, including the data specified in subsection (17) of this section.

(b) The maximum hydraulic operating pressure and the maximum voltage of the electrical systems which are part of the platform.

(c) Instructions regarding operation, safety rules, maintenance, and repair.

(d) Replacement parts information.

(17) Inspection and maintenance.

(a) Each work platform shall be inspected, maintained, repaired, and kept in proper working condition in accordance with the manufacturer's maintenance and repair manuals.

(b) Any work platform found not to be in safe operating condition shall be removed from service until repaired.

(c) All repairs shall be made by a qualified person in conformance with the manufacturer's maintenance and repair manual(s).

(18) Operator requirements. Only trained and authorized persons shall be permitted to operate the work platform. Before using the work platform, the operator shall:

(a) Be instructed by a qualified person in the intended purpose and function of each of the controls.

(b) Read and understand the manufacturer's operating instructions and safety rules, or be trained by a qualified person on the contents of the manufacturer's operating instructions and safety rules.

(c) Understand by reading or by having a qualified person explain all decals, warnings, and instructions displayed on the work platform.

(d) Prior to use on each work shift, the work platform shall be inspected for defects that would affect its safe operation and use. The inspection shall consist of the following:

(i) Visual inspection for cracked welds or other structural defects, hydraulic leaks, damaged control cables, loose wire connections, and tire damage.

(ii) Function test of the operating controls to ensure that they perform their intended functions. Any suspect items shall be carefully examined and a determination made by a qualified person as to whether they constitute a safety hazard. All unsafe items shall be corrected before further use of the work platform.

(iii) Before the work platform is used and during use, the job site shall be checked for hazards such as ditches, dropoffs or holes, bumps and floor obstructions, debris, overhead obstructions and high-voltage conductors, and other possible hazardous conditions.

(19) Requirements for operation. The work platform shall be used only in accordance with the manufacturer's

operating instructions and safety rules, ANSI 92.6-1990 and this standard.

(a) Only trained and authorized personnel shall be permitted to operate the work platform.

(b) Before each elevation of the work platform, the operator shall:

(i) Check for overhead obstructions and high-voltage conductors. A minimum distance of ten feet from energized high-voltage conductors shall be maintained at all times between the conductors and the operator and platform equipment.

(ii) Ensure the work platform is elevated only on a firm and level surface.

(iii) Ensure that the load and its distribution on the platform are in accordance with the manufacturer's rated capacity. The manufacturer's rated work load shall never be exceeded.

(iv) Ensure that outriggers or stabilizers are used in accordance with manufacturer's instructions. Wheel chocks shall be installed before using an aerial lift on an incline, provided they can be safely installed.

(v) Ensure that platform guardrails are properly installed and gates or openings are closed.

(vi) Check to see that all occupants' full body harnesses are on and properly attached.

(c) Before and during driving while elevated, the operator shall:

(i) Be required to look in the direction of, and keep a clear view of, the path of travel and make sure that the path is firm and level.

(ii) Maintain a safe distance from obstacles, debris, dropoffs, holes, depressions, ramps, and other hazards to safe elevated travel.

(iii) Maintain a safe distance from overhead obstacles.

(d) Under all travel conditions the operator shall limit speed according to conditions of ground surface, congestion, slope, location of personnel, and other factors which may create a hazard of collision or injury to personnel.

(e) Stunt driving and horseplay shall not be permitted.

(f) Personnel shall maintain a firm footing on the platform while working thereon. Safety harness and lanyard devices fixed to attachment points provided and approved by the manufacturer shall be used by all occupants. Use of railings, planks, ladders, or any other device on the work platform for achieving additional height shall be prohibited.

(g) The operators shall immediately report to their supervisor any defects or malfunctions which become evident during operation. Any defects or malfunctions that affect the safety of operation shall be repaired prior to continued use of the work platform.

(h) Altering, modifying, or disabling safety devices or interlocks is prohibited.

(i) Care shall be taken to prevent ropes, electric cords, hoses, and the like from becoming entangled in the work platform when it is being elevated, lowered, or moved.

(j) Work platform rated capacities shall not be exceeded when live loads are transferred to the platform at elevated heights.

(k) The operator shall ensure that the area surrounding the work platform is clear of personnel and equipment before lowering the platform.

(20) Refueling: Fuel tanks shall not be filled while the engine is running. Caution shall be used while filling tanks to avoid spilling fuel.

(21) Battery charging: Batteries shall not be charged except in an open, well ventilated area free of flame, smoking, spark, and fire.

(22) Modifications: There shall be no modification or alteration to work platforms without the modifications being approved and certified in writing by the manufacturer or other equivalent entity, such as a nationally recognized testing laboratory, to be in conformance with all applicable provisions of ANSI A92.5-1992 and this standard.

[Statutory Authority: RCW 49.17.010, [49.17].040, [49.17].050 and [49.17].060. 98-05-046, § 296-155-489, filed 2/13/98, effective 4/15/98.]

WAC 296-155-490 Aerial lifts. (1) "General requirements."

(a) Unless otherwise provided in this section, aerial lifts acquired for use on or after January 22, 1973, shall be designed and constructed in conformance with the applicable requirements of the American National Standards for "Vehicle Mounted Elevating and Rotating Work Platforms," ANSI A92.2-1969, including appendix. Aerial lifts acquired before January 22, 1973, which do not meet the requirements of ANSI A92.2-1969, may not be used after January 1, 1976, unless they shall have been modified so as to conform with the applicable design and construction requirements of ANSI A92.2-1969. Aerial lifts include the following types of vehicle-mounted aerial devices used to elevate personnel to jobsites above ground:

(i) Extensible boom platforms;

(ii) Aerial ladders;

(iii) Articulating boom platforms;

(iv) Vertical towers; and

(v) A combination of any such devices. Aerial equipment may be made of metal, wood, fiberglass reinforced plastic (FRP), or other material; may be powered or manually operated; and are deemed to be aerial lifts whether or not they are capable of rotating about a substantially vertical axis.

(b) Aerial lifts may be "field modified" for uses other than those intended by the manufacturer provided the modification has been certified in writing by the manufacturer or by any other equivalent entity, such as a nationally recognized testing laboratory, to be in conformity with all applicable provisions of ANSI A92.2-1969 and this section and to be at least as safe as the equipment was before modification.

(2) "Specific requirements."

(a) Ladder trucks and tower trucks:

(i) Aerial ladders shall be secured in the lower traveling position by the locking device on top of the truck cab, and the manually operated device at the base of the ladder before the truck is moved for highway travel.

(ii) A full body harness shall be worn and a lanyard attached to the ladder rail or tower when working from ladder trucks or tower trucks.

(b) Extensible and articulating boom platforms.

(i) Lift controls shall be tested each day prior to use to determine that such controls are in safe working condition.

(ii) Only authorized persons shall operate an aerial lift.

(iii) Belting off to an adjacent pole, structure, or equipment while working from an aerial lift shall not be permitted.

(iv) Employees shall always stand firmly on the floor of the basket, and shall not sit or climb on the edge of the basket or use planks, ladders, or other devices for a work position.

(v) A full body harness shall be worn and a lanyard attached to the boom or basket when working from an aerial lift.

(vi) Boom and basket load limits specified by the manufacturer shall not be exceeded.

(vii) The brakes shall be set and when outriggers are used, they shall be positioned on pads or a solid surface. Wheel chocks shall be installed before using an aerial lift on an incline, provided they can be safely installed.

(viii) An aerial lift truck shall not be moved when the boom is elevated in a working position with men in the basket, except for equipment which is specifically designed for this type of operation in accordance with the provisions of subsection (1)(a) and (b) of this section.

(ix) Articulating boom and extensible boom platforms, primarily designed as personnel carriers, shall have both platform (upper) and lower controls. Upper controls shall be in or beside the platform within easy reach of the operator. Lower controls shall provide for overriding the upper controls. Controls shall be plainly marked as to their function. Lower level controls shall not be operated unless permission has been obtained from the employee in the lift, except in case of emergency.

(x) Climbers shall not be worn while performing work from an aerial lift.

(xi) The insulated portion of an aerial lift shall not be altered in any manner that might reduce its insulating value.

(xii) Before moving an aerial lift for travel, the boom(s) shall be inspected to see that it is properly cradled and outriggers are in stowed position except as provided in (b)(viii) of this subsection.

(c) Electrical tests. All electrical tests shall conform to the requirements of ANSI A92.2-1990 section 5. However equivalent d.c. voltage tests may be used in lieu of the a.c. voltage specified in A92.2-1990; d.c. voltage tests which are approved by the equipment manufacturer or equivalent entity shall be considered an equivalent test for the purpose of this subsection (2)(c).

(d) Bursting safety factor. The provisions of the American National Standards Institute standard ANSI A92.2-1990, section 4.9 Bursting Safety Factor shall apply to all critical hydraulic and pneumatic components. Critical components are those in which a failure would result in a free fall or free rotation of the boom. All noncritical components shall have a bursting safety factor of at least 2 to 1.

(e) Welding standards. All welding shall conform to the following standards as applicable:

(i) Standard Qualification Procedure, AWS B3.0-41.

(ii) Recommended Practices for Automotive Welding Design, AWS D8.4-61.

Note: Nonmandatory Appendix C to this part lists examples of national consensus standards that are considered to provide employee protection equivalent to that provided through the application of ANSI A92.2-1990, where appropriate. Copies may be obtained from the American National Standards Institute.

[Statutory Authority: RCW 49.17.010, [49.17].040, [49.17].050 and [49.17].060. 98-05-046, § 296-155-490, filed 2/13/98, effective 4/15/98.]

WAC 296-155-496 Non-Mandatory Appendix C to Part J-1, List of National Consensus Standards. ANSI/SIA A92.2-1990 Vehicle-Mounted Elevating and Rotating Aerial Devices

ANSI/SIA A92.3-1990 Manually Propelled Elevating Aerial Platforms

ANSI/SIA A92.5-1990 Boom Supported Elevating Work Platforms

ANSI/SIA A92.6-1990 Self-Propelled Elevating Work Platforms

ANSI/SIA A92.7-1990 Airline Ground Support Vehicle-Mounted Vertical Lift Devices

ANSI/SIA A92.8-1993 Vehicle-Mounted Bridge Inspection and Maintenance Devices

ANSI/SIA A92.9-1993 Mast-Climbing Work Platforms

[Statutory Authority: RCW 49.17.010, [49.17].040, [49.17].050 and [49.17].060. 98-05-046, § 296-155-496, filed 2/13/98, effective 4/15/98.]

PART K
FLOOR OPENINGS, WALL OPENINGS AND STAIRWAYS

WAC 296-155-500 Definitions applicable to this part. **Floor hole** means an opening measuring less than 12 inches but more than 1 inch in its least dimension in any floor, roof, or platform through which materials but not persons may fall, such as a belt hole, pipe opening, or slot opening.

Floor opening means an opening measuring 12 inches or more in its least dimension in any floor, roof, or platform, through which persons may fall.

Handrail means a rail used to provide employees with a handhold for support.

Low pitched roof means a roof having a slope less than or equal to four in twelve.

Mechanical equipment means all motor or human propelled wheeled equipment except for wheelbarrows, mopcarts, robotic thermoplastic welders and robotic crimpers.

Nose, nosing means that portion of a tread projecting beyond the face of the riser immediately below.

Platform means a walking/working surface for persons, elevated above the surrounding floor or ground, such as a balcony or platform for the operation of machinery and equipment.

Riser height means the vertical distance from the top of a tread to the top of the next higher tread or platform/landing or the distance from the top of a platform/landing to the top of the next higher tread or platform/landing.

Roof means the exterior surface on the top of a building. This does not include floors which, because a building has not been completely built, temporarily become the top surface of a building.

Roofing work means the hoisting, storage, application, and removal of roofing materials and equipment, including related insulation, sheet metal, and vapor barrier work, but not including the construction of the roof deck.

Runway means a passageway for persons, elevated above the surrounding floor or ground level, such as a footwalk along shafting or a walkway between buildings.

Safety monitoring system means a safety system in which a competent person monitors the safety of all employees in a roofing crew, and warns them when it appears to the

monitor that they are unaware of the hazard or are acting in an unsafe manner. The competent person must be on the same roof and within visual distance of the employees, and must be close enough to verbally communicate with the employees.

Stair platform means an extended step or landing breaking a continuous run of stairs.

Stairrail system means a vertical barrier erected along the unprotected sides and edges of a stairway to prevent employees from falling to lower levels. The top surface of a stairrail system may also be a "handrail."

Stairs, stairways means a series of steps leading from one level or floor to another, or leading to platforms, pits, boiler rooms, crossovers, or around machinery, tanks, and other equipment that are used more or less continuously or routinely by employees or only occasionally by specific individuals. For the purpose of this part, a series of steps and landings having three or more rises constitutes stairs or stairway.

Standard railing means a vertical barrier erected along exposed edges of a floor opening, wall opening, ramp, platform, or runway to prevent falls of persons.

Standard strength and construction means any construction of railings, covers, or other guards that meets the requirements of this part.

Toeboard means a vertical barrier at floor level erected along exposed edges of a floor opening, wall opening, platform, runway, or ramp to prevent falls of materials.

Tread depth means the horizontal distance from front to back of tread (excluding nosing, if any).

Unprotected side or edge means any side or edge of a roof perimeter where there is no wall three feet (.9 meters) or more in height.

Wall opening means an opening at least 30 inches high and
18 inches wide, in any wall or partition, through which persons may fall, such as an opening for a window, a yard arm doorway or chute opening.

Work area means that portion of a roof where roofing work is being performed.

[Statutory Authority: RCW 49.17.040, [49.17.]050 and [49.17.]060. 96-24-051, § 296-155-500, filed 11/27/96, effective 2/1/97. Statutory Authority: Chapter 49.17 RCW. 95-10-016, § 296-155-500, filed 4/25/95, effective 10/1/95; 91-24-017 (Order 91-07), § 296-155-500, filed 11/22/91, effective 12/24/91; 91-03-044 (Order 90-18), § 296-155-500, filed 1/10/91, effective 2/12/91. Statutory Authority: RCW 49.17.040 and 49.17.050. 86-03-074 (Order 86-14), § 296-155-500, filed 1/21/86. Statutory Authority: RCW 49.17.040, 49.17.050 and 49.17.240. 81-13-053 (Order 81-9), § 296-155-500, filed 6/17/81; Order 74-26, § 296-155-500, filed 5/7/74, effective 6/6/74.]

WAC 296-155-505 Guardrails, handrails and covers. (1) General provisions. This part applies to temporary or emergency conditions where there is danger of employees or materials falling through floor, roof, or wall openings, or from stairways, runways, ramps, open sided floors, open sides of structures, bridges, or other open sided walking or working surfaces.

(2) The employer shall determine if the walking/working surfaces on which its employees are to work have the strength and structural integrity to support employees safely. Employees shall be allowed to work on those surfaces only when the surfaces have the requisite strength and structural integrity.

(3) When guardrails or covers required by this section must be temporarily removed to perform a specific task, the area shall be constantly attended by a monitor to warn others of the hazard or shall be protected by a movable barrier.

(4) Guarding of floor openings and floor holes.

(a) Floor openings shall be guarded by a standard railing and toe boards or cover, as specified in subsections (4)(g) and (7) of this section. In general, the railing shall be provided on all exposed sides, except at entrances to stairways. All vehicle service pits shall have a cover or removable type standard guardrail. When not in use, pits shall be covered or guarded. Where vehicle service pits are to be used again immediately, and the service person is within a 50 foot distance of the unguarded pit and also within line of sight of the unguarded pit, the cover or guardrail need not be replaced between uses. Where vehicle service pits are used frequently, the perimeters of the pits shall be delineated by high visibility, luminescent, skid resistant paint. Such painted delineation shall be kept clean and free of extraneous materials.

(b) Ladderway floor openings or platforms shall be guarded by standard railings with standard toe boards on all exposed sides, except at entrance to opening, with the passage through the railing either provided with a swinging gate or so offset that a person cannot walk directly into the opening.

(c) Hatchways and chute floor openings shall be guarded by one of the following:

(i) Hinged covers of standard strength and construction and a standard railing with only one exposed side. When the opening is not in use, the cover shall be closed or the exposed side shall be guarded at both top and intermediate positions by removable standard railings;

(ii) A removable standard railing with toe board on not more than two sides of the opening and fixed standard railings with toe boards on all other exposed sides. The removable railing shall be kept in place when the opening is not in use and shall be hinged or otherwise mounted so as to be conveniently replaceable.

(d) Wherever there is danger of falling through a skylight opening, and the skylight itself is not capable of sustaining the weight of a two hundred pound person with a safety factor of four, standard guardrails shall be provided on all exposed sides or the skylight shall be covered in accordance with (g) of this subsection.

(e) Pits and trap door floor openings shall be guarded by floor opening covers of standard strength and construction. While the cover is not in place, the pit or trap openings shall be protected on all exposed sides by removable standard railings.

(f) Manhole floor openings shall be guarded by standard covers which need not be hinged in place. While the cover is not in place, the manhole opening shall be protected by standard railings.

(g) All floor opening or hole covers shall be capable of supporting the maximum potential load but never less than two hundred pounds (with a safety factor of four).

(i) All covers shall be secured when installed so as to prevent accidental displacement by the wind, equipment, or employees.

(ii) All covers shall be color coded or they shall be marked with the word "hole" or "cover" to provide warning of the hazard.

(iii) If it becomes necessary to remove the cover, a monitor shall remain at the opening until the cover is replaced. The monitor shall advise persons entering the area of the hazard, shall prevent exposure to the fall hazard and shall perform no other duties.

(h) Floor holes, into which persons can accidentally walk, shall be guarded by either a standard railing with standard toe board on all exposed sides, or a floor hole cover of standard strength and construction that is secured against accidental displacement. While the cover is not in place, the floor hole shall be protected by a standard railing.

(5) Guarding of wall openings.

(a) Wall openings, from which there is a drop of more than 4 feet, and the bottom of the opening is less than 3 feet above the working surface, shall be guarded as follows:

(i) When the height and placement of the opening in relation to the working surface is such that either a standard rail or intermediate rail will effectively reduce the danger of falling, one or both shall be provided;

(ii) The bottom of a wall opening, which is less than 4 inches above the working surface, regardless of width, shall be protected by a standard toe board or an enclosing screen either of solid construction or as specified in subsection (7)(f)(ii) of this section.

(b) An extension platform, outside a wall opening, onto which materials can be hoisted for handling shall have standard guardrails on all exposed sides or equivalent. One side of an extension platform may have removable railings in order to facilitate handling materials.

(c) When a chute is attached to an opening, the provisions of (a) of this subsection shall apply, except that a toe board is not required.

(6) Guarding of open sided surfaces.

(a) Every open sided floor, platform or surface four feet or more above adjacent floor or ground level shall be guarded by a standard railing, or the equivalent, as specified in subsection (7)(a) of this section, on all open sides, except where there is entrance to a ramp, stairway, or fixed ladder. The railing shall be provided with a standard toe board wherever, beneath the open sides, persons can pass, or there is moving machinery, or there is equipment with which falling materials could create a hazard.

(b) Runways shall be guarded by a standard railing, or the equivalent, as specified in subsection (7) of this section, on all open sides, 4 feet or more above the floor or ground level. Wherever tools, machine parts, or materials are likely to be used on the runway, a toe board shall also be provided on each exposed side.

(c) Runways used exclusively for special purposes may have the railing on one side omitted where operating conditions necessitate such omission, providing the falling hazard is minimized by using a runway not less than 18 inches wide.

(d) Where employees entering upon runways become thereby exposed to machinery, electrical equipment, or other danger not a falling hazard, additional guarding shall be provided.

(e) Regardless of height, open sided floors, walkways, platforms, or runways above or adjacent to dangerous equipment, pickling or galvanizing tanks, degreasing units, and similar hazards, shall be guarded with a standard railing and toe board.

(f) Open sides of gardens, patios, recreation areas and similar areas located on roofs of buildings or structures shall be guarded by permanent standard railings or the equivalent. Where a planting area has been constructed adjacent to the open sides of the roof and the planting area is raised above the normal walking surface of the roof area, the open side of the planting area shall also be protected with standard railings or the equivalent.

(7) Standard specifications.

(a) A standard railing shall consist of top rail, intermediate rail, toe board, and posts, and shall have a vertical height of 42 inches (1.1 m) plus or minus 3 inches (8 cm) (39-45 inches) from upper surface of top rail to floor, platform, runway, or ramp level. When conditions warrant, the height of the top edge may exceed the 45-inch height, provided the guardrail system meets all other criteria of this subsection. The intermediate rail shall be halfway between the top rail and the floor, platform, runway, or ramp. The ends of the rails shall not overhang the terminal posts except where such overhang does not constitute a projection hazard.

Note: When employees are using stilts, the top edge height of the top rail, or equivalent member, shall be increased an amount equal to the height of the stilts.

(b) Minimum requirements for standard railings under various types of construction are specified in the following items:

(i) For wood railings, the posts shall be of at least 2 inch by 4 inch stock spaced not to exceed 8 feet; the top rail shall be of at least 2 inch by 4 inch stock and each length of lumber shall be smooth surfaced throughout the length of the railing. The intermediate rail shall be of at least 1 inch by 6 inch stock.

(ii) For pipe railings, posts and top and intermediate railings shall be at least 1 1/2 inches nominal OD diameter with posts spaced not more than 8 feet on centers.

(iii) For structural steel railings, posts and top and intermediate rails shall be of 2 inch by 2 inch by 3/8 inch angles or other metal shapes of equivalent bending strength, with posts spaced not more than 8 feet on centers.

(iv) For wire rope railings, the top and intermediate railings shall be at least 1/2 inch fibre core rope, or the equivalent to meet strength factor and deflection of (b)(v) of this subsection. Posts shall be spaced not more than 8 feet on centers. The rope shall be stretched taut, so as to present a minimum deflection.

(v) The anchoring of posts and framing of members for railings of all types shall be of such construction that the completed structure shall be capable of withstanding a load of at least 200 pounds applied in any direction at any point on the top rail, with a minimum of deflection.

(vi) Railings receiving heavy stresses from employees trucking or handling materials shall be provided additional strength by the use of heavier stock, closer spacing of posts, bracing, or by other means.

(vii) Other types, sizes, and arrangements of railing construction are acceptable, provided they meet the following conditions:

(A) A smooth surfaced top rail at a height above floor, platform, runway, or ramp level of between 39 inches and 45 inches;

(B) When the 200-pound (890N) test load specified in subsection (6)(b)(v) of this section is applied in a downward direction, the top edge of the guardrail shall not deflect to a height less than 39 inches (1.0m) above the walking/working level. Guardrail system components selected and constructed in accordance with this part will be deemed to meet this requirement;

(C) Protection between top rail and floor, platform, runway, ramp, or stair treads, equivalent at least to that afforded by a standard intermediate rail;

(D) Elimination of overhang of rail ends unless such overhang does not constitute a hazard.

(c)(i) A standard toe board shall be 4 inches minimum in vertical height from its top edge to the level of the floor, platform, runway, or ramp. It shall be securely fastened in place and have not more than 1/4 inch clearance above floor level. It may be made of any substantial material, either solid, or with openings not over 1 inch in greatest dimension.

(ii) Where material is piled to such height that a standard toe board does not provide protection, paneling, or screening from floor to intermediate rail or to top rail shall be provided.

(d) Floor opening covers shall be of any material that meets the following strength requirements:

(i) Conduits, trenches, and manhole covers and their supports, when located in roadways, and vehicular aisles shall be designed to carry a truck rear axle load of at least 2 times the maximum intended load;

(ii) All floor opening covers shall be capable of supporting the maximum potential load but never less than two hundred pounds (with a safety factor of four).

(A) All covers shall be secured when installed so as to prevent accidental displacement by the wind, equipment, or employees.

(B) All covers shall be color coded or they shall be marked with the word "hole" or "cover" to provide warning of the hazard.

(C) If it becomes necessary to remove the cover, a monitor shall remain at the opening until the cover is replaced. The monitor shall advise persons entering the area of the hazard, shall prevent exposure to the fall hazard and shall perform no other duties.

(e) Skylight openings that create a falling hazard shall be guarded with a standard railing, or covered in accordance with (d)(ii) of this subsection.

(f) Wall opening protection shall meet the following requirements:

(i) Barriers shall be of such construction and mounting that, when in place at the opening, the barrier is capable of withstanding a load of at least 200 pounds applied in any direction (except upward), with a minimum of deflection at any point on the top rail or corresponding member.

(ii) Screens shall be of such construction and mounting that they are capable of withstanding a load of at least 200 pounds applied horizontally at any point on the near side of the screen. They may be of solid construction of grill work with openings not more than 8 inches long, or of slat work with openings not more than 4 inches wide with length unrestricted.

[Statutory Authority: RCW 49.17.010, [49.17].040, and [49.17].050. 00-14-058, § 296-155-505, filed 7/3/00, effective 10/1/00. Statutory Authority: RCW 49.17.040, [49.17.]050 and [49.17.]060. 96-24-051, § 296-155-505, filed 11/27/96, effective 2/1/97. Statutory Authority: Chapter 49.17 RCW. 95-10-016, § 296-155-505, filed 4/25/95, effective 10/1/95; 94-15-096 (Order 94-07), § 296-155-505, filed 7/20/94, effective 9/20/94; 91-24-017 (Order 91-07), § 296-155-505, filed 11/22/91, effective 12/24/91; 91-03-044 (Order 90-18), § 296-155-505, filed 1/10/91, effective 2/12/91; 90-03-029 (Order 89-20), § 296-155-505, filed 1/11/90, effective 2/26/90. Statutory Authority: RCW 49.17.040 and 49.17.050. 86-03-074 (Order 86-14), § 296-155-505, filed 1/21/86. Statutory Authority: RCW 49.17.040, 49.17.050 and 49.17.240. 81-13-053 (Order 81-9), § 296-155-505, filed 6/17/81; Order 76-29, § 296-155-505, filed 9/30/76; Order 74-26, § 296-155-505, filed 5/7/74, effective 6/6/74.]

WAC 296-155-50503 Roofing brackets. (1) Roofing brackets shall be constructed to fit the pitch of the roof.

(2) Securing: Brackets shall be secured in place by nailing in addition to the pointed metal projections. When it is impractical to nail brackets, rope supports shall be used. When rope supports are used, they shall consist of first grade manila of at least 3/4 inch diameter, or equivalent.

(3) Crawling boards or chicken ladders.

(a) Crawling boards shall be not less than ten inches wide and one inch thick, having cleats 1 x 1 1/2 inches.

(i) The cleats shall be equal in length to the width of the board and spaced at equal intervals not to exceed twenty-four inches.

(ii) Nails shall be driven through and clinched on the underside.

(iii) The crawling board shall extend from the ridge pole to the eaves when used in connection with roof construction, repair, or maintenance.

(b) A firmly fastened lifeline of at least 3/4 inch diameter rope, or equivalent, shall be strung beside each crawling board for a handhold.

(c) Crawling boards shall be secured to the roof by means of adequate ridge hooks or other effective means.

[Statutory Authority: RCW 49.17.040, [49.17.]050 and [49.17.]060. 96-24-051, § 296-155-50503, filed 11/27/96, effective 2/1/97. Statutory Authority: Chapter 49.17 RCW. 95-10-016, § 296-155-50503, filed 4/25/95, effective 10/1/95; 91-03-044 (Order 90-18), § 296-155-50503, filed 1/10/91, effective 2/12/91. Statutory Authority: RCW 49.17.040 and 49.17.050. 86-03-074 (Order 86-14), § 296-155-50503, filed 1/21/86.]

WAC 296-155-50505 Reserved.

[Statutory Authority: Chapter 49.17 RCW. 94-15-096 (Order 94-07), § 296-155-50505, filed 7/20/94, effective 9/20/94; 91-24-017 (Order 91-07), § 296-155-50505, filed 11/22/91, effective 12/24/91. Statutory Authority: RCW 49.17.040 and 49.17.050. 86-03-074 (Order 86-14), § 296-155-50505, filed 1/21/86.]

WAC 296-155-510 Reserved.

[Statutory Authority: Chapter 49.17 RCW. 91-24-017 (Order 91-07), § 296-155-510, filed 11/22/91, effective 12/24/91; 89-11-035 (Order 89-03), § 296-155-510, filed 5/15/89, effective 6/30/89. Statutory Authority: RCW 49.17.040 and 49.17.050. 86-03-074 (Order 86-14), § 296-155-510, filed 1/21/86; Order 74-26, § 296-155-510, filed 5/7/74, effective 6/6/74.]

WAC 296-155-515 Ramps, runways, and inclined walkways. (1) Width. Ramps, runways and inclined walkways shall be eighteen inches or more wide.

(2) Standard railings. Ramps, runways and inclined walkways shall be provided with standard railings when located four feet or more above ground or floor level.

(3) Ramp specifications. Ramps, runways and walkways shall not be inclined more than twenty degrees from horizontal and when inclined shall be cleated or otherwise treated to prevent a slipping hazard on the walking surface.

[Statutory Authority: RCW 49.17.040, [49.17.]050 and [49.17.]060. 96-24-051, § 296-155-515, filed 11/27/96, effective 2/1/97. Statutory Authority: Chapter 49.17 RCW. 95-10-016, § 296-155-515, filed 4/25/95, effective 10/1/95. Statutory Authority: RCW 49.17.040 and 49.17.050. 86-03-074 (Order 86-14), § 296-155-515, filed 1/21/86.]

PART L
CRANES, DERRICKS, HOISTS, ELEVATORS, AND CONVEYORS

WAC 296-155-525 Cranes and derricks. (1) Definitions applicable to this part:

Accessory - a secondary part or assembly of parts which contributes to the overall function and usefulness of a machine.

Administrative or regulatory authority - a governmental agency, or the employer in the absence of governmental jurisdiction.

Angle indicator (boom) - an accessory which measures the angle of the boom to the horizontal.

Appointed - assigned specific responsibilities by the employer or the employer's representative.

Authorized person - means a person approved or assigned by the employer to perform a specific type of duty or duties or be at a specific location or locations at the workplace.

Auxiliary hoist - a secondary hoist rope system used either in conjunction with, or independently of, the main hoist system.

Axis of rotation - the vertical axis around which the crane superstructure rotates.

Axle - the shaft or spindle with which or about which a wheel rotates. On wheel-mounted cranes it refers to a type of axle assembly including housings, gearing, differential, bearings, and mounting appurtenances.

Axle (bogie) - two or more axles mounted in tandem in a frame so as to divide the load between the axles and permit vertical oscillation of the wheels.

Ballast - weight used to supplement the weight of the machine in providing stability for lifting working loads (the term **ballast** is normally associated with locomotive cranes).

Base, anchor bolt - a crane base that is bolted to a footing.

Base, expendable - for static-mounting cranes, a style of bottom mast section or member that is cast into a concrete footing block; all or part of this component is lost to future installations.

Base, fixed - a crane base that does not travel. It may be expendable, knee braced, or anchor bolted.

Base (mounting) - the traveling base on which the rotating superstructure of a locomotive or crawler crane is mounted.

Base, tower crane - the lowermost supporting component of the crane.

Base, travel - a crane base that is a ballasted platform mounted on trucks that ride along rails.

Boom (crane) - a member hinged at the rotating superstructure and used for supporting the existing tackle.

Boom angle - the angle above or below horizontal of the longitudinal axis of the base boom section.

Boom hoist mechanism - means for supporting the boom and controlling the boom angle.

Boom point - the outer extremity of the crane boom, containing the hoist sheave assembly.

Boom point sheave assembly - an assembly of sheaves and pin built as an integral part of the boom point.

Boom stop - a device used to limit the angle of the boom at the highest recommended position.

Brake - a device used for retarding or stopping motion.

Brace, tower - a structural attachment placed between a crane tower and an adjacent structure to pass loads to the adjacent structure and permit the crane to be erected to greater than free standing height.

Buffer - an energy absorbing device for reducing impact when a moving crane or trolley reaches the end of its permitted travel.

Cab - a housing which covers the rotating superstructure machinery, or the operator's or driver's station.

Climbing frame - a frame used with climbing cranes to transmit operational and climbing reactions to the host building frame.

Climbing ladder - a steel member with crossbars (used in parts) suspended from a climbing frame and used as jacking support points when some cranes climb.

Clutch - a means for engagement or disengagement of power.

Commercial truck vehicle - a commercial motor vehicle designed primarily for the transportation of property in connection with business and industry.

Counterweight - weight used to supplement the weight of the machine in providing stability for lifting working loads.

Counterweight jib - a horizontal member of a crane on which the counterweights and usually the hoisting machinery are mounted.

Crane carrier - the undercarriage of a wheel-mounted crane specifically designed for transporting the rotating crane superstructure. It may or may not provide its own travel mechanism. It is distinguished from a commercial truck vehicle in that it is not designed to transport personnel, materials, or equipment other than the crane-rotating superstructure.

Cross-over points - in multiple layer spooling of rope on a drum, those points of rope contact where the rope crosses the preceding rope layer.

Designated - selected or assigned by the employer or the employer's representative as being competent to perform specific duties.

Drum - the cylindrical member around which a rope is wound for lifting and lowering the load or boom.

Dynamic (loading) - loads introduced into the machine or its components due to accelerating or decelerating forces.

Flange point - a point of contact between rope and drum flange where the rope changes layers.

Free standing height - that height of a crane which is supported by the tower (mast) alone without assistance from braces, guys, or other means.

Gage, track - the horizontal distance between two rails measured perpendicular to the direction of travel.

Gantry (A-frame) - a structural frame, extending above the superstructure, to which the boom support ropes are reeved.

High strength (traction) bolts - high strength tensile bolts used in the assembly of crane sections. The bolts are installed in tension by torquing or other means at a level greater than that produced by in- or out-of-service loads for the purpose of reducing the likelihood of bolt fatigue failure.

Hoist mechanism - a hoist drum and rope reeving system used for lifting and lowering loads.

Jib - an extension attached to the boom point to provide added boom length for lifting specified loads. The jib may be in line with the boom or offset to various angles in the vertical plane of the boom.

Jib backstop - a device which will restrain the jib from turning over backward.

Job site - work area defined by the construction contract.

Limiting device - a mechanical device which is operated by some part of a power driven machine or equipment to control loads or motions of the machine or equipment.

Load (working) - the external load in pounds (kilograms) applied to the crane, including the weight of load-attaching equipment such as lower load block, shackles, and slings.

Load block, lower - the assembly of hook or shackle, swivel, sheaves, pins, and frame suspended by the hoisting ropes.

Load block, upper - the assembly of shackle, swivel, sheaves, pins, and frame suspended from the boom point.

Load ratings - crane ratings in pounds (kilograms) established by the manufacturer.

Mast (boom) - a frame hinged at or near the boom hinge for use in connection with supporting a boom. The head of the mast is usually supported and raised or lowered by the boom hoist ropes.

Mast (jib) - a frame hinged at or near the boom point for use in connection with supporting a jib.

Normal operating conditions.

Cab- or station-operated cranes - conditions during which a crane is performing functions within the manufacturer's operating recommendations. Under these conditions, the operator is at the operating control devices on the crane, and no other persons except those appointed are to be on the crane.

Ground- or floor-operated cranes - conditions during which a crane is performing functions within the manufacturer's operating recommendations. Under these conditions, the operator is at the operating control devices that are mounted to the crane but operated with the operator off the crane, and no other persons except those appointed are to be on the crane.

Remote-operated cranes - conditions during which a crane is performing functions within the manufacturer's operating recommendations. Under these conditions, the operator is at the operating control devices that are mounted to any part of the crane, and no other persons except those appointed are to be on the crane.

Out-of-service - the condition of a crane when unloaded, without power and with the controls unattended and prepared to endure winds above the in-service level.

Outriggers - extendable or fixed members attached to the mounting base, which rest on supports at the outer ends used to support the crane.

Pawl (dog) - a device for positively holding a member against motion in one or more directions.

Payload - that load or loads being transported by the commercial truck chassis from place to place.

Pendant - a rope or strand of specified length with fixed end connections.

Pitch diameter - the diameter of a sheave or rope drum measured at the center line of the rope.

Power-controlled lowering - a system or device in the power train, other than the load hoist brake, which can control the lowering rate of speed of the load hoist mechanism.

Qualified person - a person who, by possession of a recognized degree or certificate of professional standing, or who, by extensive knowledge, training, and experience, has successfully demonstrated the ability to solve or resolve problems relating to the subject matter and work.

Radius (load) - the horizontal distance from a projection of the axis of rotation to the base of the crane, before loading, to the center of the vertical hoist line or tackle with load applied.

Rail clamp - a tong-like metal device mounted on a locomotive crane car, which can be connected to the track.

Reeving - a rope system in which the rope travels around drums and sheaves.

Remote control station - a location, not on the crane, from which the operator can control all the crane movements.

Repetitive pickup point - when operating on a short cycle operation, the rope being used on a single layer and being spooled repetitively over a short portion of the drum.

Rope - refers to wire rope unless otherwise specified.

Rotation resistant rope - a wire rope consisting of an inner layer of strand laid in one direction covered by a layer of strand laid in the opposite direction. This has the effect of counteracting torque by reducing the tendency of the finished rope to rotate.

Running rope - a rope which travels around sheaves or drums.

Shall - this word indicates that the rule is mandatory and must be followed.

Service, light - service that involves irregular operation with loads generally about one-half or less of the rated load; a service crane at a storage yard or building site would be an example.

Service, normal - service that involves operating occasionally at rated load but normally at less than eighty-five percent of the rated load and not more than ten lift cycles per hour except for isolated instances; a crane used for concrete placement at a building site would be an example.

Service, heavy - service that involves operating at eighty-five percent to one hundred percent of the rated load or in excess of ten lift cycles per hour as a regular specified procedure; some cranes operating at material yards or in industrial applications may fall into this category.

Sheave - a grooved wheel or pulley used with a rope to change the direction and point of application of a pulling force.

Should - this word indicates that the rule is a recommendation, the advisability of which depends on the facts in each situation.

Side loading - a load applied to an angle to the vertical plane of the boom.

Stabilizer - stabilizers are extendable or fixed members attached to the mounting base to increase the stability of the crane, but which may not have the capability of relieving all of the weight from wheels or tracks.

Standby crane - a crane which is not in regular service but which is used occasionally or intermittently as required.

Standing (guy) rope - a supporting rope which maintains a constant distance between the points of attachment to the two components connected by the rope.

Structural competence - the ability of the machine and its components to withstand the stresses imposed by applied loads.

Superstructure - the rotating upper frame structure of the machine and the operating machinery mounted thereon.

Swing - rotation of the superstructure for movement of loads in a horizontal direction about the axis of rotation.

Swing mechanism - the machinery involved in providing rotation of the superstructure.

Swivel - a load carrying member with thrust bearings to permit rotation under load in a plane perpendicular to the direction of the load.

Swiveling - the rotation of the load attachment portion (hook or shackle) of a load block (lower) or hook assembly about its axis of suspension in relation to the load line(s).

Tackle - an assembly of ropes and sheaves arranged for lifting, lowering, or pulling.

Telescoping boom - consists of a base boom from which one or more boom sections are telescoped for additional length.

Telescoping (tower crane) - a process whereby the height of a traveling or fixed base crane is increased typically by raising the inner tower and then adding sections at the top of the outer tower; there are also cranes that are telescoped by adding to the inner tower from below.

Tower (mast) - a vertical structural frame consisting of columns and bracing capable of supporting an upperstructure with its working and dynamic loads and transmitting them to the supporting surface or structure.

Traction (high strength) bolts - see high strength bolts.

Transit - the moving or transporting of a crane from one job site to another.

Travel - the function of the machine moving under its own power from one location to another on a job site.

Trolley - the device that travels along the load jib and contains the upper load block.

Two-blocking - the condition in which the lower load block or hook assembly comes in contact with the upper load block or boom point sheave assembly.

Weathervaning - wind induced rotation of a crane upperstructure, when out-of-service, to expose minimal surface area to the wind.

Wedge - a tapered wood or steel device used to provide stability to cranes during use as a climber. When the wedges are tightened against the four main legs of the tower, they convert overturning moments into horizontal forces to be resisted by the floor framing or slab.

Wheel base - the distance between centers of front and rear axles. For a multiple axle assembly the axle center for wheel base measurement is taken as the midpoint of the assembly.

Whipline (runner or auxiliary) - a secondary rope system usually of lighter load capacity than that provided by the main rope system.

Winch head - a power driven spool for handling of loads by means of friction between fiber or wire rope and the spool.

(2) General requirements.

(a) The employer shall comply with the manufacturer's specifications and limitations applicable to the operation of any and all cranes and derricks. Where manufacturer's specifications are not available the limitations assigned to the equipment shall be based on the determinations of a qualified engineer, competent in this field and such determinations will be appropriately documented and recorded. Attachments used with cranes shall not exceed the capacity, rating, or scope recommended by the manufacturer.

(b) Rated load capacities, and recommended operating speeds, and special hazard warnings, or instruction, shall be conspicuously posted on all equipment. Instructions or warnings shall be visible to the operator while at the control station.

(c) Hand signals to crane and derrick operators shall be those prescribed by the applicable ANSI standard for the type of crane in use. An illustration of the signals shall be posted at the job site.

(d) The employer shall designate a competent person who shall inspect all machinery and equipment prior to each use, and periodically during use to make sure it is in safe operating condition. Any deficiencies shall be repaired, or defective parts replaced, before continued use.

(e) A thorough, annual inspection of the hoisting machinery shall be made by a competent person, or by a government or private agency recognized by the department. The employer shall maintain a permanent record of the dates and results of all inspections for each hoisting machine and piece of equipment.

(f) A tag line or guide rope shall be used on all loads that swing freely. Guide ropes or tag lines shall be held by experienced persons.

(g) Care shall be taken to guard against injury to workers, or damage to scaffolds or buildings, from swinging loads.

(h) The operator shall avoid carrying loads over people.

(i) When work is stopped or when the derrick is not in operation, the boom shall be lowered to a horizontal position or tied in place to prevent it whipping with the wind or other external force.

(j) Only authorized personnel shall make sling hitches on loads.

(k) Workers shall not be allowed to ride on loads handled by derricks.

(l) Operators shall observe signals only from duly authorized persons. Under no circumstances shall a load be moved until the signal is received from authorized personnel.

(m) Belts, gears, shafts, pulleys, sprockets, spindles, drums, fly wheels, chains, or other reciprocating, rotating, or

other moving parts or equipment shall be guarded if such parts are exposed to contact by employees, or otherwise create a hazard. Guarding shall meet the requirements of chapter 296-806 WAC, Machine safety.

(n) A minimum distance of thirty inches clearance shall be maintained between the swing radius of the greatest extension of the crane superstructure or counterweights and a stationary object, including the crane itself, while the crane is in operation. When this clearance cannot be maintained, suitable barricades or safeguards shall be used to isolate the pinch point hazard area.

(o) All exhaust pipes shall be guarded or insulated where contact by employees, in the performance of normal duties, is possible.

(3) Additional requirements.

(a) Whenever internal combustion engine powered equipment exhausts in enclosed spaces, tests shall be made and recorded to see that employees are not exposed to unsafe concentrations of toxic gases or oxygen deficient atmospheres. (See chapter 296-62 WAC, the general occupational health standards and other applicable standards.)

(b) All cab glazing shall be safety glazing material. Windows shall be provided in the front and on both sides of the cab or operator's compartment with visibility forward and to either side. Visibility forward shall include a vertical range adequate to cover the boom point at all times. The front window may have a section which can be readily removed or held open, if desired. If the section is of the type held in the open position, it shall be secured to prevent inadvertent closure. A windshield wiper should be provided on the front window.

(c)(i) Where necessary for rigging or service requirements, a ladder or steps shall be provided to give access to a cab roof.

(ii) On cranes, guardrails, handholds and steps shall be provided for easy access to the car and cab in accordance with chapter 296-155 WAC, Part C-1 and Part J.

(iii) Platforms and walkways shall have anti-skid surfaces.

(d) Fuel tank filler pipe shall be located in such a position, or protected in such manner, as to not allow spill or overflow to run onto the engine, exhaust, or electrical equipment of any machine being fueled.

(i) An accessible fire extinguisher of 5BC rating, or higher, shall be available at all operator stations or cabs of equipment.

Note: For additional requirements relating to portable fire extinguishers see WAC 296-800-300.

(ii) All fuels shall be transported, stored, and handled to meet the rules of Part D of this chapter. When fuel is transported by vehicles on public highways, department of transportation rules concerning such vehicular transportation are considered applicable.

(e) Except where electrical distribution and transmission lines have been deenergized and visibly grounded at point of work or where insulating barriers, not a part of or an attachment to the equipment or machinery, have been erected to prevent physical contact with the lines, equipment or machines shall be operated proximate to power lines only in accordance with the following:

(i) For lines rated 50 kV. or below, minimum clearance between the lines and any part of the crane or load shall be 10 feet;

(ii) For lines rated over 50 kV., minimum clearance between the lines and any part of the crane or load shall be 10 feet plus 0.4 inch for each 1 kV. over 50 kV., or twice the length of the line insulator, but never less than 10 feet;

(iii) In transit with no load and boom lowered, the equipment clearance shall be a minimum of 4 feet for voltages less than 50 kV., and 10 feet for voltages over 50 kV. up to and including 345 kV., and 16 feet for voltages up to and including 750 kV;

(iv) A person shall be designated to observe clearance of the equipment and give timely warning to insure that the required separation is maintained for all operations where it is difficult for the operator to maintain the desired clearance by visual means;

(v) Cage-type boom guards, insulating links, or proximity warning devices may be used on cranes, but the use of such devices shall not alter the requirements of any other regulation of this part even if such device is required by law or regulation;

(vi) Any overhead wire shall be considered to be an energized line unless and until the person owning such line or the electrical utility authorities indicate that it is not an energized line and it has been visibly grounded;

(vii) Prior to work near transmitter tower where an electrical charge can be induced in the equipment or materials being handled, the transmitter shall be deenergized or tests shall be made to determine if electrical charge is induced on the crane.

(f) The following precautions shall be taken when necessary to dissipate induced voltage:

(i) The equipment shall be provided with an electrical ground directly to the upper rotating structure supporting the boom; and

(ii) Ground jumper cables shall be attached to materials being handled by boom equipment when electrical charge is induced while working near energized transmitters. Crews shall be provided with nonconductive poles having large alligator clips or other similar protection to attach the ground cable to the load.

(iii) Combustible and flammable materials shall be removed from the immediate area prior to operations.

(g) No modifications or additions which affect the capacity or safe operation of the equipment shall be made by the employer without the manufacturer's or a qualified engineer's written approval. If such modifications or changes are made, the capacity, operation, and maintenance instruction plates, tags, or decals, shall be changed accordingly. In no case shall the original safety factor of the equipment be reduced.

(h) The employer shall comply with Power Crane and Shovel Association, Mobile Hydraulic Crane Standard No. 2.

(i) Sideboom cranes mounted on wheel or crawler tractors shall meet the requirements of SAE J743a-1964.

(4) Crawler, locomotive, and truck cranes.

(a) All jibs shall have positive stops to prevent their movement of more than 5° above the straight line of the jib and boom on conventional type crane booms. The use of cable type belly slings does not constitute compliance with this standard.

(b) All crawler, truck or locomotive cranes in use shall meet the applicable requirements for design, inspection, construction, testing, maintenance and operation as prescribed in the ANSI B30.5-1989, Safety Code for Crawler, Locomotive and Truck Cranes.

(5) Tower cranes.

(a) Tower cranes shall be erected, jumped and dismantled under the immediate supervision of a competent person, designated by the employer.

(b) Tower cranes shall be erected, maintained and used in accordance with the manufacturer's specifications, recommendations and procedures. All modifications shall be approved by the manufacturer and engineered by a professional engineer. The safety factors shall not be reduced by any modifications. The crane plates and charts shall be changed to reflect any modifications made.

(c) A professional engineer shall certify that the crane foundations and underlying soil are adequate support for the tower crane with its maximum overturning movement.

(d) Tower cranes shall be positioned whereby they can swing 360° without either the counterweight or jib striking any building, structure or other object, except:

(i) If the crane can strike an object or another crane, suitable limit switches shall be installed which will prohibit contact with such objects, or;

(ii) Direct voice communications shall be established between any operator of the tower crane(s) involved and a signalperson so stationed where the boom and/or counterweight movement, and the object with which it may contact can be observed so that the operator(s) can be warned of imminent danger.

(iii) A secondary means of positive communications shall be established as a back-up for possible direct voice communication failure.

(iv) Radio communication systems without tone coded squelch are prohibited. Citizens band radios shall not be used as a means of communications for tower cranes.

(e) Prior to installing a climbing tower crane within an existing building or new construction, a structural engineer shall certify that the building is designed to withstand the torque and floor loading created by the crane to be installed.

(f) Tower cranes erected on a new foundation shall be tested in accordance with ANSI B30.3-1990 Chapter 3-1.

(i) The test shall consist of suspending a load of not less than 110% of the rated capacity for 15 minutes. The load shall be suspended from the furthest point of the length of boom (jib) to be used. The results of this test shall be within the manufacturer's recommendations and/or specifications.

(ii) A record of each test shall be made and signed by the person responsible for conducting the test. Such records shall be maintained on the construction site for the duration of the construction work for which it was erected and subsequently made a part of the firm's permanent equipment records. Records shall be made available to authorized representatives of the department, upon request.

(g) A capacity chart shall be furnished by each crane manufacturer which shall include a full and complete range of crane load ratings at all stated operating radii for each allowable speed and each recommended counterweight load.

(i) Such chart shall be posted in the operator's cab or at the remote control stand in use. In lieu of the chart at the remote control stand, a minimum of two weight capacity signs shall be affixed to the jib or boom.

(ii) The chart shall be visible and readable to the operator while at the normal operating position.

(h) Operating controls shall be properly marked to indicate the function of the controls in each position.

(i) An operating and maintenance manual written in the English language shall be provided with each tower crane.

(j) Limit switches shall be installed and shall be kept properly adjusted. They shall be protected or isolated in a manner which will prevent unauthorized tampering. Limit switches shall provide the following functions:

(i) Safely limit the travel of the trolley to prevent it from hitting the outer end of the jib.

(ii) Limit the upward travel of the load block to prevent two-blocking.

(iii) Lower over travel limiting devices shall be provided for all load hoists where the hook area is not visible to the operator.

(iv) Limit the load being lifted in a manner whereby no more than 110% of the maximum rated load can be lifted or moved.

(k) The crane shall not be used to pull vehicles of any type, remove piling, loosen form work, pull away loads which are attached to the ground or walls, or for any operation other than the proper handling of freely suspended loads.

(l) When the operator may be exposed to the hazard of falling objects, the tower crane cab and/or remote control station shall have adequate overhead protection.

(m) The operator shall be protected from the weather. If enclosed cabs are provided they shall provide clear visibility in all directions and glass shall be approved safety glass or the equivalent.

(n) An approved and safe means shall be provided for access to operator's cab and machinery platform.

(o) When necessary for inspection or maintenance purposes, ladders, walkways with railing or other devices shall be provided.

(p) Each tower crane shall be provided with a slewing brake capable of preventing the jib or boom from rotating in either direction and stopping the rotation of the jib or boom while loaded, when desired. Such brake shall have a holding device which, when set, will hold the jib or boom in a fixed location without additional attention of the operator. When the crane is out of operation, the jib or boom shall be pointed downwind and the slewing brake shall be released so as to permit the jib or boom to weathervane, providing the jib or boom has a clear 360 degree rotation. Where a 360 degree rotation is not provided, the jib or boom shall be pointed downwind from the prevailing wind and the slewing brake set.

(q) Each tower crane shall be provided with a braking system on the trolley capable of stopping and holding the trolley in any desired position while carrying a maximum load. This brake shall be capable of being locked in a fixed location without additional attention of the operator. An automatic brake or device shall be installed which will immediately stop and lock the trolley in position in the event of a breakage of the trolley rope.

(r) All electrical equipment shall be properly grounded and protection shall be provided against lightning.

(s) When the operator is actually operating the crane, the operator shall remain in a stationary position.

(t) All crane brakes shall automatically set in event of power failure. Swing brakes shall also function in this manner or be capable of being set manually.

(u) Climbing jack systems used for raising a tower crane shall be equipped with over-pressure relief valves, direct-reading pressure gauges, and pilot-operated hydraulic check valves installed in a manner which will prevent jack from retracting should a hydraulic line or fitting rupture or fail.

(v) During periods of high winds or weather affecting visibility, i.e., fog, etc., only loads shall be handled that are consistent with good safety practices. Good safety practices shall be mutually agreed upon by the operator and the person in charge of the construction job, with due consideration given to manufacturer's specifications and recommendations.

(w) Counterweights shall be securely fastened in place and shall not exceed the weight as recommended by the manufacturer for the length of jib being used. However, an amount of counterweight as recommended by the manufacturer shall be used.

(x) Tower cranes shall be inspected and maintained in accordance with the manufacturer's recommendations or more frequently if there is reason to suspect a possible defect or weakening of any portion of the structure or equipment.

(y) Guy wires, wedges, braces or other supports shall be inspected at the beginning and at midpoint of each working shift to ascertain that they are functioning as intended.

(6) Additional tower crane requirements.

(a) An approved method must be instituted for transmitting signals to the operator. Standard hand signals for crane operations must be used, whenever possible; however, if conditions are such that hand signals are ineffective, radio-controlled or electric-whistle signal or two-way voice communication must be used. (See WAC 296-155-525 (5)(d).)

(b) Tower cranes shall not be erected or raised when the wind velocity at the worksite exceeds 20 m.p.h. or that specified by the manufacturer.

(c) Tower crane operators shall be trained and experienced in tower crane operations; however, for gaining experience, persons may operate the tower crane if under the immediate supervision of an experienced operator.

(d) Adequate clearance shall be maintained between moving and rotating structures of the crane and fixed objects to allow the passage of employees without harm.

(e) Employees required to perform duties on the horizontal boom of hammerhead tower cranes shall be protected against falling by guardrails or by a full body harness and lanyards attached to crane or to lifelines in conformance with Part C-1 of this chapter.

(f) Buffers shall be provided at both ends of travel of the trolley.

(g) Cranes mounted on rail tracks shall be equipped with limit switches limiting the travel of the crane on the track and stops or buffers at each end of the tracks.

(h) All hammerhead tower cranes in use shall meet the applicable requirements for design, construction, installation, testing, maintenance, inspection, and operation as prescribed by the manufacturer.

(i) Access ladders inside the telescoping sections of tower cranes are exempt from those sections of the safety standards pertaining to cleat length and cleat spacing, but shall conform to manufacturer's recommendations and specifications.

(7) Overhead and gantry cranes.

(a) The rated load of the crane shall be plainly marked on each side of the crane, and if the crane has more than one hoisting unit, each hoist shall have its rated load marked on it or its load block, and this marking shall be clearly legible from the ground or floor.

(b) Bridge trucks shall be equipped with sweeps which extend below the top of the rail and project in front of the truck wheels.

(c) Except for floor-operated cranes, a gong or other effective audible warning signal shall be provided for each crane equipped with a power traveling mechanism.

(d) All overhead and gantry cranes in use shall meet the applicable requirements for design, construction, installation, testing, maintenance, inspection, and operation as prescribed in ANSI B30.2.0-1990, Safety Code for Overhead and Gantry Cranes.

(8) Derricks. All derricks in use shall meet the applicable requirements for design, construction, installation, inspection, testing, maintenance, and operation as prescribed in American National Standard Institute B30.6-1990, Safety Code for Derricks.

(9) Floating cranes and derricks.

(a) Mobile cranes mounted on barges.

(i) When a mobile crane is mounted on a barge, the rated load of the crane shall not exceed the original capacity specified by the manufacturer.

(ii) A load rating chart, with clearly legible letters and figures, shall be provided with each crane, and securely fixed at a location easily visible to the operator.

(iii) When load ratings are reduced to stay within the limits for list of the barge with a crane mounted on it, a new load rating chart shall be provided.

(iv) Mobile cranes on barges shall be positively secured.

(b) Permanently mounted floating cranes and derricks.

(i) When cranes and derricks are permanently installed on a barge, the capacity and limitations of use shall be based on competent design criteria.

(ii) A load rating chart with clearly legible letters and figures shall be provided and securely fixed at a location easily visible to the operator.

(iii) Floating cranes and floating derricks in use shall meet the applicable requirements for design, construction, installation, testing, maintenance, and operation as prescribed by the manufacturer.

(c) Protection of employees working on barges. The employer shall comply with the applicable requirements for protection of employees as specified in WAC 296-155-630.

(10) Mobile cranes and excavation machines.

(a) In all power driven shovel operations the person in charge shall issue instructions necessary to prevent accidents, to detect and correct unsafe acts and dangerous conditions, and to enforce all safety rules and regulations.

The person in charge shall also issue instructions on the proper method of using tools and handling material.

(b) Where the ground is soft or uneven, timbering and planking shall be used to provide firm foundation and distribute the load.

(c) In case of a breakdown, the shovel shall be moved away from the foot of the slope before repairs are made.

(d) All persons shall keep away from the range of the shovel's swing and shall not be permitted to stand back of the shovel or in line with the swing of the dipper during operation or moving of shovel.

(e) Unauthorized persons shall not be allowed on the shovel during operations, and the operator shall not converse with other persons while operating machine.

(f) The shovel dipper shall rest on the ground or on blocking during shut down periods.

(g) Shovels shall be inspected daily and all defects promptly repaired.

(h) All rubber tired mobile cranes shall be equipped with outriggers and sufficient blocking to properly stabilize crane while operating.

(i) Rubber tired mobile cranes shall be equipped with rear view mirrors.

(j) Positive boom stops shall be provided on all mobile cranes of the wheel and crawler type.

(k) Length of a crane boom and amount of counterweight shall not exceed manufacturer's rated capacity for equipment involved; except on isolated cases where permission is granted by the department.

(l) On all cranes where wedge brackets are used as terminal connections, the proper size wedge shall be used.

(m) On all mobile cranes, the hoist and boom drums shall be provided with a positive operated pawl or dog which shall be used in addition to the brake to hold the load and boom when they are suspended. Counterweight operated dogs are prohibited.

(n) Oiling and greasing shall be done under safe conditions with machine at rest, except when motion of machine is necessary.

(o) All steps, running boards, and boom ladder shall be of substantial construction and in good repair at all times.

(p) Operators shall not leave the cab while master clutch is engaged.

(q) Fire extinguishers shall be readily accessible and within reach of operator at all times.

(r) All shovel and crane cabs shall be kept clean and free of excess oil and grease on floor and machinery. Oily and greasy rags shall be disposed of immediately after use and not allowed to accumulate.

(s) Tools shall not be left on the cab floor. Spare cans of oil or fuel, and spare parts, shall not be stored in cabs, except in approved racks provided for that purpose.

(t) Mats or planking shall be used in moving shovels or cranes over soft or uneven ground.

(u) Cranes or shovels setting on steep grades shall be securely blocked or secured with a tail hold.

(v) Smoking shall be prohibited while fueling or oiling machines.

(w) Gasoline powered motors shall be stopped during refueling.

(x) Handling of movable feed line (bologna) shall be accomplished with insulated hooks and lineman's rubber gloves.

(y) Where cables cross roads they shall be elevated or placed in a trench.

(z) On all power shovels, including back-hoe types, of one-half cubic yard capacity or over, and on all dragline cranes or all-purpose cranes of the crawler or wheel type, two persons shall constitute the minimum working crew. It is mandatory that one be a qualified operator of the equipment in use. The job title of the other crew member may be oiler, rigger, signal person, or a laborer. The primary purpose of the second crew member is to signal the operator when the operator's vision is impaired or obscured and to be on-hand in case of emergency.

(i) Second-crew persons shall be properly trained in their second-person required skills.

(ii) The second crew member shall be close enough to the machine in operation to be aware of any emergency, if one arises, and to assure the machine is operated with necessary and appropriate signals to the operator.

[Statutory Authority: RCW 49.17.010, 49.17.040, 49.17.050, and 49.17.060. 04-14-028, § 296-155-525, filed 6/29/04, effective 1/1/05. Statutory Authority: RCW 49.17.010, [49.17].040, [49.17].050. 02-12-098, § 296-155-525, filed 6/5/02, effective 8/1/02; 01-17-033, § 296-155-525, filed 8/8/01, effective 9/1/01. Statutory Authority: RCW 49.17.040, [49.17].050 and [49.17].060. 95-17-036, § 296-155-525, filed 8/9/95, effective 9/25/95. Statutory Authority: Chapter 49.17 RCW. 91-03-044 (Order 90-18), § 296-155-525, filed 1/10/91, effective 2/12/91; Order 76-29, § 296-155-525, filed 9/30/76; Order 74-26, § 296-155-525, filed 5/7/74, effective 6/6/74.]

WAC 296-155-526 Crane attached personnel platforms. (1) **Scope, application, and definitions.**

(a) **Scope and application.** This standard applies to the design, construction, testing, use and maintenance of personnel platforms, and the hoisting of personnel platforms attached to the boom of cranes. Crane attached personnel platforms must meet the applicable requirements for design, inspection, construction, testing, maintenance, and operation as prescribed in the ASME B30.23-1998 safety code for Personnel Lifting Systems.

(b) **Definitions.** For the purposes of this section, the following definitions apply:

"Failure" means load refusal, breakage, or separation of components.

"Lift" (or lifting) refers to all crane functions such as hoisting, lowering, swinging, booming in and out or up and down, or moving an attached personnel platform.

"Load refusal" means the point where the ultimate strength is exceeded.

"Runway" means a firm, level surface, designed, prepared, and designated as a path of travel for the weight and configuration of the crane being used to lift and travel with the attached crane platform. An existing surface may be used as long as it meets these criteria.

(2) **General requirements.** The use of a crane to hoist employees on a personnel platform is prohibited, except when the erection, use, and dismantling of conventional means of reaching the worksite, such as a personnel hoist, ladder, stairway, aerial lift, elevating work platform or scaffold, would be more hazardous, or is not possible because of structural design or worksite conditions.

(3) **Cranes requirements.**

(a) All lifting operations must be performed in accordance with the manufacturer's requirements.

(b) Hoist lines must be removed and stowed or an anti two-block device installed.

(c) Lifting of the personnel platform must be performed in a slow, controlled manner with no sudden movements of the crane or the platform.

(d) Load and boom hoist drum brakes, swing brakes, and locking devices, such as pawls or dogs, must be engaged when the personnel platform is occupied in a stationary working position.

(e) The crane must be uniformly level within one percent of level grade and located on firm footing. Cranes equipped with outriggers must follow manufacturer's requirements for use.

(f) The total weight of the loaded personnel platform must not exceed fifty percent of the rated capacity for the radius and configuration of the crane as required by load chart specifications.

(g) The use of machines having live booms (booms in which lowering is controlled by a brake without aid from other devices which slow the lowering speeds) is prohibited.

(4) **Instruments and components.**

(a) Cranes with variable angle booms must be equipped with a boom angle indicator, readily visible to the operator.

(b) Cranes with telescoping booms must be equipped with a device that at all times clearly indicates the boom's extended length to the operator. An accurate determination of the load radius, to be used during the lift, must be made before hoisting personnel.

(5) **Personnel platforms - design criteria.**

(a) A qualified engineer must design the personnel platform and attachment system.

(b) The attachment system must be designed to minimize tipping of the platform to no more than ten degrees from horizontal.

(c) The platform design must incorporate a motion control device that stabilizes the platform while being held in a working position.

(d) The personnel platform, excluding the guardrail system and body harness anchorages, must be capable of supporting, without failure, its own weight and at least five times the maximum intended load—based on a minimum allowance of five hundred pounds for the first person with light tools, and an additional two hundred fifty pounds for each additional person.

(e) Criteria for guardrail systems contained in chapter 296-155 WAC, Part K and body harness anchorages are contained in chapter 296-155 WAC, Part C will be followed.

(f) A plate or other permanent marking which indicates the weight of the platform and its rated load capacity or maximum intended load, must be conspicuously posted on the personnel platform.

(6) **Platform specifications.**

(a) Each personnel platform must be equipped with a guardrail system which meets the requirements of chapter 296-155 WAC, Part K. The personnel platform must also be enclosed at least from the toeboard to mid-rail with either solid construction or expanded metal having openings no greater than one-half inch (1.27 cm).

(b) A grab rail must be installed inside the entire perimeter of the personnel platform.

(c) Access gates, if installed, must not swing outward during hoisting.

(d) Access gates, including sliding or folding gates, must be equipped with a restraining device to prevent accidental opening.

(e) Employees must have sufficient headroom to stand upright on the platform.

(f) All rough edges exposed to contact by employees must be surfaced or smoothed in order to prevent injury to employees from punctures or lacerations.

(g) A qualified welder familiar with the weld grades and types must perform all welding of the personnel platform and its components, with material specified in the platform design.

(7) **Personnel platform loading.**

(a) The personnel platform must not be loaded in excess of its rated load capacity.

(b) The number of employees on the personnel platform must not exceed the number required for the work to be performed.

(c) Personnel platforms must be used only for employees, tools, and materials necessary to do the work. Personnel platforms will not be used to hoist materials or tools without an employee on the platform (except to perform a trial lift or proof test as described in subsection (8) of this section).

(d) Materials and tools must be secured to prevent displacement.

(e) Materials and tools must be evenly distributed, within the confines of the platform, while work is being performed.

(f) Employees must keep their feet in contact with the floor of the platform at all times.

(8) **Prelift meeting.**

(a) A meeting attended by the crane operator, signal person(s) (if necessary for the lift), employee(s) to be lifted, and the person responsible for the task to be performed must be held to review the appropriate requirements of this section and the procedures to be followed.

(b) This meeting must be held before the trial lift at each new work location, and must be repeated for any employees newly assigned to the operation.

(9) **Trial lift, inspection, and proof testing.**

(a) A trial lift with an unoccupied personnel platform loaded at least to the anticipated lift weight must be made from ground level, or any other location where employees will enter the platform, to each location at which the personnel platform is to be hoisted and positioned. This trial lift must be performed immediately prior to allowing employees on the platform. The operator must determine that:

• All systems, controls, and safety devices are activated and functioning properly;

• No interferences exist; and

• All configurations necessary to reach work locations will allow the operator to remain under the fifty percent limit of the crane's rated capacity.

• Materials and tools to be used during the actual lift must be loaded in the platform, as provided in subsection (7) of this section, for the trial lift.

Note: A single trial lift may be performed for all locations that are to be reached from a single set-up position.

(b) The trial lift must be repeated:

• Prior to hoisting employees whenever the crane is moved and set up in a new location, or returned to a previously used location.

• A meeting attended by the crane operator, signal person(s) (if necessary for the lift), employee(s) to be lifted, and the person responsible for the task to be performed must be held to review the appropriate requirements of this section and the procedures to be followed.

(c) After the trial lift:

• But prior to hoisting personnel, the platform must be hoisted a few inches and inspected to ensure that it is secure and properly balanced.

• A visual inspection of the crane, personnel platform, and the crane base support or ground must be conducted by a competent person to determine whether the testing has exposed any defect or produced any adverse effect upon any component or structure.

(d) Deficiencies found during inspection, or operation, which create a safety hazard, must be corrected before hoisting personnel.

(e) The platform must be proof tested:

• At each job site;

• Prior to hoisting employees on the personnel platform; and

• After any repair or modification.

(i) For the proof test, one hundred twenty-five percent of the platform's rated capacity will be hoisted and held in a suspended position for five minutes. The proof test load must be evenly distributed on the platform.

(ii) After each proof test a competent person must inspect the platform and rigging.

(iii) Deficiencies found during proof testing must be corrected, and another proof test conducted. Employees must not be hoisted until a deficiency free proof test has been achieved.

Note: Proof testing may be done concurrently with the required trial lift.

(10) **Work practices.**

(a) Employees must keep all parts of the body inside the platform during raising, lowering, and positioning, except when performing the duties of a signal person.

(b) Before entering or exiting a personnel platform that is not landed, the platform must be secured to the structure where the work is to be performed, unless securing to the structure creates an unsafe situation.

(c) The crane operator must remain at the controls at all times when the platform is occupied.

(d) Employee lifting must be promptly discontinued upon indication of any dangerous weather conditions.

(e) Employees being lifted must remain in continuous sight of and in direct communication with the operator or signal person. Any disruption in communications will cause operations to be immediately discontinued. Signals to the operator will be in accordance with section 5-3.3, ASME B30.5 1994 and this section.

(f) In situations where direct visual contact with the operator is not possible, or the use of a signal person may be hazardous for that person, direct communication alone, such as by radio, may be used. If a secure radio frequency is not available, hard-wired voice communication will be used. When using voice commands, there will be a continuous pause between commands of one-second duration per ten feet to the desired lift height or any contact point.

(g) The following voice commands are recommended for use:

❏ Boom up.
❏ Boom down.
❏ Swing left.
❏ Swing Right.
❏ Extend out.
❏ Retract in.
❏ Stop.

Note: If special voice commands are required to perform the lift safely, they must be mutually agreed upon between the designated signal person and the crane operator before the lift procedure starts.

(h) Employees on a personnel platform must use a full body harness system with lanyard appropriately attached to a structural member within the personnel platform capable of supporting a fall impact for employees using the anchorage as specified in chapter 296-155 WAC, Part C.

(i) Lifts must not be made on the crane's load lines while personnel are working from an attached platform.

(11) **Traveling.**

(a) Lifting of employees while the crane is traveling is prohibited, except for portal, tower and locomotive cranes, or where the employer demonstrates that there is no less hazardous way to perform the work.

(b) Under any circumstances where a crane would travel while lifting personnel, the employer must implement the following procedures to safeguard employees:

(i) Crane travel must be restricted to a fixed track or runway;

(ii) Travel must be limited to the load radius of the boom used during the lift; and

(iii) The boom must be parallel to the direction of travel.

(c) A complete trial run must be performed before employees are allowed to occupy the platform.

Note: This trial run can be performed concurrent with the trial lift required by subsection (8) of this section.

(d) If travel is done with a rubber tired-carrier, the condition and air pressure of the tires must be checked. The chart capacity for lifts on rubber must be used for application of the fifty percent reduction of rated capacity. Notwithstanding the requirements of subsection (3) of this section, outriggers may be partially retracted as necessary for travel.

(12) **Communication.** When using verbal signals, clarity and precision are essential for safe operation. Operators must be able to communicate with others at the worksite sufficiently to understand the signs, notices, operation instructions, and the signal code to be used.

[Statutory Authority: RCW 49.17.010, [49.17.]040 and [49.17.]050. 00-15-028, § 296-155-526, filed 7/12/00, effective 10/1/00.]

WAC 296-155-527 Appendix A to WAC 296-155-525. Due to crane design configuration to maintain mobility, sheave diameters and rope, design factors are limited. Because of these limited design parameters, inspection to detect deterioration in accordance with subsections below and timely replacement are essential.

(1) Frequent inspection.

(a) All running ropes in service should be visually inspected once each working day. A visual inspection shall consist of observation of all rope which can reasonably be

expected to be in use during the day's operations. These visual observations should be concerned with discovering gross damage, such as listed below, which may be an immediate hazard:

(i) Distortion of the rope such as kinking, crushing, unstranding, birdcaging, main strand displacement, or core protrusion. Loss of rope diameter in a short rope length or unevenness of outer strands should provide evidence that the rope or ropes must be replaced.

(ii) General corrosion.

(iii) Broken or cut strands.

(iv) Number, distribution and type of visible broken wires. (See subsection below for further guidance.)

(v) Core failure in rotation resistant ropes. When such damage is discovered the rope shall be either removed from service or given an inspection as detailed in periodic inspection.

(b) Care shall be taken when inspecting sections of rapid deterioration such as flange points, crossover points and repetitive pickup points on drums.

(c) Care shall be taken when inspecting certain ropes such as the following:

(i) Rotation resistant ropes, because of their higher susceptibility to damage and increased deterioration when working on equipment with limited design parameters. The internal deterioration of rotation resistant ropes may not be readily observable.

(ii) Boom hoist ropes, because of the difficulties of inspection and the important nature of these ropes.

(2) Periodic inspection.

(a) The inspection frequency shall be determined by a qualified person and shall be based on such factors as expected rope life as determined by experience on the particular installation or similar installations, severity of environment, percentage of capacity lifts, frequency rates of operation, and exposure to shock loads. Inspections need not be at equal calendar intervals and should be more frequent as the rope approaches the end of its useful life. This inspection shall be performed at least annually.

(b) Periodic inspections shall be performed by a qualified person. This inspection shall cover the entire length of rope. Only the surface wires of the rope need be inspected. No attempt should be made to open the rope. Any deterioration resulting in an appreciable loss of original strength, such as described below, shall be noted and determination made as to whether further use of the rope would constitute a hazard:

(i) Points listed in subsection (1) of this section (Frequent inspection).

(ii) Reduction of rope diameter below nominal diameter due to loss of core support, internal or external corrosion, or wear of outside wires.

(iii) Severely corroded or broken wires at end connections.

(c) Care shall be taken when inspecting sections of rapid deterioration, such as the following:

(i) Sections in contact with saddles, equalizer sheaves, or other sheaves where rope travel is limited;

(ii) Sections of the rope at or near terminal ends where corroded or broken wires may protrude.

(3) Rope replacement.

(a) No precise rules can be given for determination of the exact time for replacement of rope, since many variable factors are involved. Continued use in this respect depends largely upon good judgment by an appointed or authorized person in evaluating remaining strength in a used rope after allowance for deterioration disclosed by inspection. Continued rope operations depends upon this remaining strength.

(b) Conditions such as the following shall be sufficient reason for questioning continued use of the rope or increasing the frequency of inspection:

(i) In running ropes, six randomly distributed broken wires in one lay or three broken wires in one strand in one lay (for special conditions relating to rotation resistant rope refer to paragraph 5-3.2.1.1 (d)(1)(b) ANSI\ASME B30.5 1989).

(ii) One outer wire broken at the point of contact with the core of the rope which has worked its way out of the rope structure and protrudes or loops out from the rope structure. Additional inspection of this section is required.

(iii) Wear of one-third the original diameter of outside individual wires.

(iv) Kinking, crushing, birdcaging, or any other damage resulting in distortion of the rope structure.

(v) Evidence of any heat damage from any cause.

(vi) Reductions from nominal diameter of more than:

(A) 1/64 in. (0.4 mm) for diameters up to and including 5/16 in. (8.0 mm);

(B) 1/32 in. (0.8 mm) for diameters 3/8 in. (9.5 mm) to and including 1/2 in. (13.0 mm);

(C) 3/64 in. (1.2 mm) for diameters 9/16 in. (14.5 mm) to and including 3/4 in. (19.0 mm);

(D) 1/16 in. (1.6 mm) for diameters 7/8 in. (22.0 mm) to and including 1 1/8 in. (29.0 mm);

(E) 3/32 in. (2.4 mm) for diameters 1 1/4 in. (32.0 mm) to and including 1 1/2 in. (38.0 mm).

(vii) In standing ropes, more than two broken wires in one lay in sections beyond end connections or more than one broken wire at an end connection.

(c) Replacement rope shall have a strength rating at least as great as the original rope furnished or recommended by the crane manufacturer. Any deviation from the original size, grade, or construction shall be specified by a rope manufacturer, the crane manufacturer or a qualified person.

(d) Rope not in regular use. All rope which has been idle for a period of a month or more due to shutdown or storage of a crane on which it is installed shall be given an inspection before it is placed in service. This inspection shall be for all types of deterioration and shall be performed by an appointed or authorized person.

(e) Inspection records:

(i) Frequent inspection; no records required.

(ii) Periodic inspection: In order to establish data as a basis for judging the proper time for replacement, a dated report of rope condition at each periodic inspection shall be kept on file. This report shall cover points of deterioration. If the rope is replaced only that part need be recorded.

(f) A long-range inspection program should be established and should include records on the examination of ropes removed from service so that a relationship can be established between visual observation and actual condition of the internal structure.

(4) Rope maintenance.

(a) Rope should be stored to prevent damage or deterioration.

(b) Unreeling or uncoiling of rope shall be done as recommended by the rope manufacturer and with care to avoid kinking or inducing a twist.

(c) Before cutting a rope, seizings shall be placed on each side of the place where the rope is to be cut to prevent unlaying of the strands. On preformed rope, one seizing on each side of the cut is required. On nonpreformed ropes of 7/8 in. (22 mm) diameter or smaller, two seizings on each side of the cut are required, and for nonpreformed rope of 1 in. (26 mm) diameter or larger, three seizings on each side of the cut are required.

(d) During installation, care should be exercised to avoid dragging of the rope in dirt or around objects which will scrape, nick, crush, or induce sharp bends in it.

(e) Rope should be maintained in a well lubricated condition. It is important that lubricant applied as part of a maintenance program shall be compatible with the original lubricant, and to this end, the rope manufacturer should be consulted; lubricant applied shall be of the type which does not hinder visual inspection. Those sections of rope which are located over sheaves or otherwise hidden during inspection and maintenance procedures require special attention when lubricating rope. The object of rope lubrication is to reduce internal friction and to prevent corrosion.

(f) When an operating rope shows greater wear at well-defined localized areas than on the remainder of the rope, rope life can be extended (in cases where a reduced rope length is adequate) by cutting off a section at the worn end, and thus shifting the wear to different areas of the rope.

(5) Operating near electric power lines:

(a) Cranes shall be operated so that no part of the crane or load enters into the danger zone.

Exceptions: The danger zone may be entered if the electrical distribution and transmission lines have been de-energized and visibly grounded at the point of work; or the danger zone may be entered if insulating barriers (not a part of nor an attachment to the crane) have been erected to prevent physical contact with the lines.

(i) For lines rated 50 kV. or below, minimum clearance between the lines and any part of the crane or load (including handling appendages) shall be 10 feet (3 m).

(ii) Caution shall be exercised when working near overhead lines because they can move horizontally or vertically due to wind, moving the danger zone to new positions.

(iii) While in transit with no load and boom lowered, the clearance shall be as specified in WAC 296-155-525 (3)(e).

(iv) A qualified signal person shall be assigned to observe the clearance when the crane moves to within a boom's length of the limits specified in WAC 296-155-525 (3)(e). The operator is not in the best position to judge distance between the power line and the crane or its protuberances.

(b) If cage-type boom guards, insulating links, or proximity warning devices are used on cranes, such devices shall not be a substitute for the requirements of WAC 296-155-525 (3)(e), even if such devices are required by law or regulation. In view of the complex, invisible, and lethal nature of the electrical hazard involved, and to lessen the potential of false security, limitations of such devices, if used, shall be understood by operating personnel and tested in the manner and intervals prescribed by the manufacturer of the device. Compliance with WAC 296-155-525 (3)(e) is the recommended practice of this regulation in determining permissible proximity of the crane and its protuberances, including load, to electrical power lines.

(c) Before the commencement of operations near electrical lines, the person responsible for the job shall notify the owners of the lines or their authorized representatives, provide them with all pertinent information, and request their cooperation.

(d) Any overhead wire shall be considered to be an energized line unless and until the person owning such line or the electrical utility authorities verify that it is not an energized line.

(e) Exceptions to this procedure, if approved by the owner of the electrical lines, may be granted by the administrative or regulatory authority if the alternate procedure provides protection and is set forth in writing.

(f) Durable signs shall be installed at the operator's station and on the outside of the crane warning that electrocution or serious bodily injury may occur unless a minimum clearance of 10 feet (3 m) is maintained between the crane or the load being handled and energized power lines. Greater clearances are required because of higher voltage as stated in WAC 296-155-525 (3)(e). These signs shall be revised when local jurisdiction requires greater clearances.

(6) Site preparation and erection.

(a) All load bearing foundations, supports, and rail tracks shall be constructed or installed to support the crane loads and to transmit them to the soil or other support medium. In addition to supporting vertical load, foundations and supports, rail supports excepted, should be designed to provide a moment resisting overturning equal to a minimum of 150% of the maximum crane overturning moment.

(b) Rails should be level and straight, unless specifically designed for curves or grades, and properly spaced for the crane trucks in accordance with the manufacturer's specifications. The track and support system should have sufficient rigidity to limit dynamic oscillations and deviations from plumb.

(c) Rails shall be securely attached to the supporting surface in a manner capable of resisting the horizontal and vertical loads specified by the manufacturer. When applicable, provisions should be made for thermal expansion and contraction.

(d) Splices in rail tracks (bolted or welded) shall have smooth joints.

(e) When required, a designated portion of the track should be arranged and constructed as an out-of-service parking area complete with means needed for supporting the crane against storm wind effects and anchoring it against unwanted movement along the track; the parking track should be in place before erection commences.

(f) Rails shall be electrically grounded when they carry cranes electrically powered from an outside source.

(g) Both ends of all tracks shall be provided with stops or buffers adjusted for simultaneous contact with both sides of the travel base.

(h) When more than one crane will be operating on a run of track, particular consideration should be given to the number and disposition of parking areas.

(i) The hazard of earthquake effects appropriated to the site or zone should be considered.

(j) The crane manufacturer shall provide maximum resulting loads at the base of the crane, or wheel loads, for use in design of the supports.

(7) General erection requirements.

(a) When cranes are erected, the manufacturer's or a qualified person's written erection instructions and a list of the weights of each component to be erected shall be at the site.

(b) Cranes shall be erected in accordance with the crane manufacturer's or a qualified person's recommendations. Erection shall be performed under the supervision of a qualified person.

(c) Procedures shall be established before erection work commences to implement the erection instructions and to adapt them to the particular needs of the site. The need for temporary guying and bracing during erection shall be established.

(d) Before crane components are erected, they shall be visually inspected for damage. Damaged members shall not be erected until repaired in accordance with the manufacturer's or qualified person's instructions, or replaced.

(e) Slings and lifting accessories shall be selected and arranged to avoid damaging or marring crane members during erection.

(f) Wind velocity at the site at the time of erection should be considered as a limiting factor that could require suspending the erection operation.

(g) Crane towers shall be erected plumb to a tolerance that is specified by the manufacturer.

(h) Cranes required to weathervane when out-of-service shall be installed with clearance for the boom and superstructure to swing a full 360° arc without striking a fixed object or other crane.

[Statutory Authority: RCW 49.17.040, [49.17.]050 and [49.17.]060. 97-11-055, § 296-155-527, filed 5/20/97, effective 8/1/97; 95-17-036, § 296-155-527, filed 8/9/95, effective 9/25/95.]

WAC 296-155-528 Crane or derrick suspended personnel platforms. (1) Scope, application, and definitions.

(a) Scope and application. This standard applies to the design, construction, testing, use and maintenance of personnel platforms, and the hoisting of personnel platforms on the load lines of cranes or derricks.

(b) Definitions. For the purposes of this section, the following definitions apply:

(i) "Failure" means load refusal, breakage, or separation of components.

(ii) "Hoist" (or hoisting) means all crane or derrick functions such as lowering, lifting, swinging, booming in and out or up and down, or suspending a personnel platform.

(iii) "Load refusal" means the point where the ultimate strength is exceeded.

(iv) "Maximum intended load" means the total load of all employees, tools, materials, and other loads reasonably anticipated to be applied to a personnel platform or personnel platform component at any one time.

(v) "Runway" means a firm, level surface designed, prepared, and designated as a path of travel for the weight and configuration of the crane being used to lift and travel with the crane suspended platform. An existing surface may be used as long as it meets these criteria.

(2) General requirements. The use of a crane or derrick to hoist employees on a personnel platform is prohibited, except when the erection, use, and dismantling of conventional means of reaching the worksite, such as a personnel hoist, ladder, stairway, aerial lift, elevating work platform or scaffold, would be more hazardous, or is not possible because of structural design or worksite conditions.

(3) Cranes and derricks.

(a) Operational criteria.

(b) Hoisting of the personnel platform shall be performed in a slow, controlled, cautious manner with no sudden movements of the crane or derrick, or the platform.

(c) Load lines shall be capable of supporting, without failure, at least seven times the maximum intended load, except that where rotation resistant rope is used, the lines shall be capable of supporting without failure, at least ten times the maximum intended load. The required design factor is achieved by taking the current safety factor of 3.5 (required under WAC 296-155-525 (4)(b)) and applying the fifty percent derating of the crane capacity which is required by (f) of this subsection.

(d) Load and boom hoist drum brakes, swing brakes, and locking devices such as pawls or dogs shall be engaged when the occupied personnel platform is in a stationary working position.

(e) The crane shall be uniformly level within one percent of level grade and located on firm footing. Cranes equipped with outriggers shall have them all fully deployed following manufacturer's specifications, insofar as applicable, when hoisting employees.

(f) The total weight of the loaded personnel platform and related rigging shall not exceed fifty percent of the rated capacity for the radius and configuration of the crane or derrick.

(g) The use of machines having live booms (booms in which lowering is controlled by a brake without aid from other devices which slow the lowering speeds) is prohibited.

(h) Multiple-part line block: When a multiple-part line block is in use, a substantial strap shall be used between the crane hook and common ring, shackle, or other equivalent device, to eliminate employee exposure to the lines running through the block, and to the block itself.

(4) Instruments and components.

(a) Cranes and derricks with variable angle booms shall be equipped with a boom angle indicator, readily visible to the operator.

(b) Cranes with telescoping booms shall be equipped with a device to indicate clearly to the operator, at all times, the boom's extended length, or an accurate determination of the load radius to be used during the lift shall be made prior to hoisting personnel.

(c) A positive acting device shall be used which prevents contact between the load block or overhaul ball and the boom tip (anti-two-blocking device), or a system shall be used which deactivates the hoisting action before damage occurs in the event of a two-blocking situation (two block damage prevention feature).

(d) The load line hoist drum shall have a system or device on the power train, other than the load hoist brake,

which regulates the lowering rate of speed of the hoist mechanism (controlled load lowering). Free fall is prohibited.

(5) Rigging.

(a) Lifting bridles on box-type platforms shall consist of four legs of equal length, with one end securely shackled to each corner of the platform and the other end securely attached to a common ring, shackle, or other equivalent device to accommodate the crane hook, or a strap to the crane hook.

(b) Shackle bolts used for rigging of personnel platforms shall be secured against displacement.

(c) A substantial safety line shall pass through the eye of each leg of the bridle adjacent to the common ring, shackle, or equivalent device.

(d) Securely fastened with a minimum amount of slack to the lift line above the headache ball or to the crane hook itself.

(e) All eyes in wire rope slings shall be fabricated with thimbles.

(f) Wire rope, shackles, rings, master links, and other rigging hardware must be capable of supporting, without failure, at least five times the maximum intended load applied or transmitted to that component. Where rotation resistant wire rope is used for slings, they shall be capable of supporting without failure at least ten times the maximum intended load.

(g) Hooks on headache ball assemblies, lower load blocks, or other attachment assemblies shall be of a type that can be closed and locked, eliminating the hook throat opening. Alternatively, an alloy anchor type shackle with a bolt, nut and retaining pin may be used.

(h) Bridles and associated rigging for attaching the personnel platform to the hoist line shall be used only for the platform and the necessary employees, their tools and the materials necessary to do their work, and shall not be used for any other purpose when not hoisting personnel.

(6) Personnel platforms - design criteria.

(a) The personnel platform and suspension system shall be designed by a qualified engineer or a qualified person competent in structural design.

(b) The suspension system shall be designed to minimize tipping of the platform due to movement of employees occupying the platform.

(c) The personnel platform itself, except the guardrail system and body harness anchorages, shall be capable of supporting, without failure, its own weight and at least five times the maximum intended load based on a minimum allowance of five hundred pounds for the first person with light tools, and an additional two hundred fifty pounds for each additional person.

(d) Criteria for guardrail systems contained in chapter 296-155 WAC, Part K and body harness anchorages are contained in chapter 296-155 WAC, Part C-1.

(e) The personnel platform shall be conspicuously posted with a plate or other permanent marking which indicates the weight of the platform and its rated load capacity or maximum intended load.

(7) Platform specifications.

(a) Each personnel platform shall be equipped with a guardrail system which meets the requirements of chapter 296-155 WAC, Part K and, shall be enclosed at least from the toeboard to mid-rail with either solid construction or expanded metal having openings no greater than one-half inch (1.27 cm).

(b) A grab rail shall be installed inside the entire perimeter of the personnel platform.

(c) Access gates, if installed, shall not swing outward during hoisting.

(d) Access gates, including sliding or folding gates, shall be equipped with a restraining device to prevent accidental opening.

(e) Headroom shall be provided which allows employees to stand upright in the platform.

(f) In addition to the use of hard hats, employees shall be protected by overhead protection on the personnel platform when employees are exposed to falling objects.

(g) All rough edges exposed to contact by employees shall be surfaced or smoothed in order to prevent injury to employees from punctures or lacerations.

(h) All welding of the personnel platform and its components shall be performed by a qualified welder familiar with the weld grades, types, and material specified in the platform design.

(i) Occupants of all personnel platforms shall wear a safety belt or harness and lanyard which meets the requirements of chapter 296-155 WAC, Part C-1.

(j) Box-type platform: The workers lanyard shall be secured to an anchorage within the platform meeting the requirements of chapter 296-155 WAC, Part C-1.

(k) Rescue platform:

(i) If the platform is used as a rescue vehicle, the injured worker shall be strapped into the stretcher or basket.

(ii) The basket shall then be secured by lanyard to an anchorage within the platform meeting the requirements of chapter 296-155 WAC, Part C-1.

(l) Boatswains chair: The workers lanyard shall be secured to the lift line above the headache ball or to the crane hook itself.

(m) Barrel-type platform:

(i) The workers lanyard shall be secured to the lift line above the headache ball or to the crane hook itself.

(ii) A solid bar or rod shall be substantially attached in a rigid position to the bottom or side of the platform.

(iii) The bottom of the barrel-type platform shall be of a convex shape to cause the platform to lay on its side when lowered to the ground or floor.

(iv) The bar or rod shall extend a minimum of eight feet above the floor of the platform.

(v) Workers shall enter and exit from barrel-type platforms only when they are in an upright position, stable, and securely attached to the load line.

(vi) The employer shall use methods or devices which allow employees to safely enter or exit barrel-type platforms.

(8) Personnel platform loading.

(a) The personnel platform shall not be loaded in excess of its rated load capacity.

(b) The number of employees occupying the personnel platform shall not exceed the number required for the work being performed.

(c) Personnel platforms shall be used only for employees, their tools, and the materials necessary to do their work, and shall not be used to hoist only materials or tools when not hoisting personnel.

(d) Materials and tools for use during a personnel lift shall be secured to prevent displacement.

(e) Materials and tools for use during a personnel lift shall be evenly distributed within the confines of the platform while the platform is suspended.

(9) Trial lift, inspection, and proof testing.

(a) A trial lift with the unoccupied personnel platform loaded at least to the anticipated liftweight shall be made from ground level, or any other location where employees will enter the platform, to each location at which the personnel platform is to be hoisted and positioned. This trial lift shall be performed immediately prior to placing personnel on the platform. The operator shall determine that all systems, controls, and safety devices are activated and functioning properly; that no interferences exist; and that all configurations necessary to reach those work locations will allow the operator to remain under the fifty percent limit of the hoist's rated capacity. Materials and tools to be used during the actual lift can be loaded in the platform, as provided in subsection (8)(d) and (e) of this section for the trial lift. A single trial lift may be performed at one time for all locations that are to be reached from a single set-up position.

(b) The trial lift shall be repeated prior to hoisting employees whenever the crane or derrick is moved and set up in a new location or returned to a previously used location. Additionally, the trial lift shall be repeated when the lift route is changed unless the operator determines that the route change is not significant (i.e., the route change would not affect the safety of hoisted employees).

(c) After the trial lift, and just prior to hoisting personnel, the platform shall be hoisted a few inches and inspected to ensure that it is secure and properly balanced. Employees shall not be hoisted unless the following conditions are determined to exist:

(i) Hoist ropes shall be free of kinks;

(ii) Multiple part lines shall not be twisted around each other;

(iii) The primary attachment shall be centered over the platform; and

(iv) The hoisting system shall be inspected if the load rope is slack to ensure all ropes are properly stated on drums and in sheaves.

(d) A visual inspection of the crane or derrick, rigging, personnel platform, and the crane or derrick base support or ground shall be conducted by a competent person immediately after the trial lift to determine whether the testing has exposed any defect or produced any adverse effect upon any component or structure.

(e) Any defects found during inspections which create a safety hazard shall be corrected before hoisting personnel.

(f) At each job site, prior to hoisting employees on the personnel platform, and after any repair or modification, the platform and rigging shall be proof tested to one hundred twenty-five percent of the platform's rated capacity by holding it in a suspended position for five minutes with the test load evenly distributed on the platform (this may be done concurrently with the trial lift). After proof testing, a competent person shall inspect the platform and rigging. Any deficiencies found shall be corrected and another proof test shall be conducted. Personnel hoisting shall not be conducted until the proof testing requirements are satisfied.

(10) Work practices.

(a) Employees shall keep all parts of the body inside the platform during raising, lowering, and positioning. This provision does not apply to an occupant of the platform performing the duties of a signal person.

(b) Before employees exit or enter a hoisted personnel platform that is not landed, the platform shall be secured to the structure where the work is to be performed, unless securing to the structure creates an unsafe situation.

(c) Tag lines shall be used unless their use creates an unsafe condition.

(d) The crane or derrick operator shall remain at the controls at all times when the crane engine is running and the platform is occupied.

(e) Hoisting of employees shall be promptly discontinued upon indication of any dangerous weather conditions or other impending danger.

(f) Employees being hoisted shall remain in continuous sight of and in direct communication with the operator or signal person. In those situations where direct visual contact with the operator is not possible, and the use of a signal person would create a greater hazard for that person, direct communication alone such as by radio may be used.

(g) Hand signals to the operator shall be in accordance with WAC 296-155-525 (2)(c).

(h) Except over water, employees occupying the personnel platform shall use a full body harness system with lanyard appropriately attached to the lower load block or overhaul ball, or to a structural member within the personnel platform capable of supporting a fall impact for employees using the anchorage as specified in chapter 296-155 WAC, Part C-1. When working over water, the requirements of WAC 296-155-235 shall apply.

No lifts shall be made on another of the crane's or derrick's load lines while personnel are suspended on a platform.

(11) Traveling.

(a) Hoisting of employees while the crane is traveling is prohibited, except for portal, tower and locomotive cranes, or where the employer demonstrates that there is no less hazardous way to perform the work.

(b) Under any circumstances where a crane would travel while hoisting personnel, the employer shall implement the following procedures to safeguard employees:

(i) Crane travel shall be restricted to a fixed track or runway;

(ii) Travel shall be limited to the load radius of the boom used during the lift; and

(iii) The boom must be parallel to the direction of travel.

(c) A complete trial run shall be performed to test the route of travel before employees are allowed to occupy the platform. This trial run can be performed at the same time as the trial lift required by subsection (9)(a) of this section which tests the route of the lift.

(d) If travel is done with a rubber tired-carrier, the condition and air pressure of the tires shall be checked. The chart capacity for lifts on rubber shall be used for application of the fifty percent reduction of rated capacity. Notwithstanding subsection (3)(e) of this section, outriggers may be partially retracted as necessary for travel.

(12) Prelift meeting.

(a) A meeting attended by the crane or derrick operator, signal person(s) (if necessary for the lift), employee(s) to be lifted, and the person responsible for the task to be performed shall be held to review the appropriate requirements of this section and the procedures to be followed.

(b) This meeting shall be held prior to the trial lift at each new work location, and shall be repeated for any employees newly assigned to the operation.

[Statutory Authority: RCW 49.17.010, [49.17].040, [49.17].050 and [49.17].060. 98-05-046, § 296-155-528, filed 2/13/98, effective 4/15/98.]

WAC 296-155-530 Material hoists, personnel hoists, and elevators. (1) General requirements.

(a) The employer shall comply with the manufacturer's specifications and limitations applicable to the operation of all hoists and elevators. Where the manufacturer's specifications are not available, the limitations assigned to the equipment shall be based on the determinations of a professional engineer competent in the field.

(b) The employer shall ensure that no person shall enter a hoistway, elevator shaft, or similar enclosure in which the hoisting apparatus or vehicle is installed and functioning unless the power source operating those systems is locked out in accordance with WAC 296-155-429.

(c) Rated load capacities, recommended operating speeds, and special hazard warning or instructions shall be posted on cars and platforms.

(d) Wire rope shall be removed from service when any of the following conditions exists:

(i) In hoisting ropes, six randomly distributed broken wires in one rope lay or three broken wires in one strand in one rope lay;

(ii) Abrasion, scrubbing, flattening, or peening, causing loss of more than one-third of the original diameter of the outside wires;

(iii) Evidence of any heat damage resulting from a torch or any damage caused by contact with electrical wires;

(iv) Reduction from nominal diameter of more than three sixty-fourths inch for diameters up to and including three-fourths inch; one-sixteenth inch for diameters seven-eighths to 1 1/8 inches; and three thirty-seconds inch for diameters 1 1/4 to 1 1/2 inches.

(e) Hoisting ropes shall be installed in accordance with the wire rope manufacturer's recommendations.

(f) The installation of live booms on hoists is prohibited.

(g) The use of endless belt-type man lifts on construction shall be prohibited.

(h) Employees shall not be permitted to ride on top of material hoists, personnel hoists or permanent elevators except for purposes of inspection, maintenance, elevator installation or dismantling work.

(2) Material hoists, (a)(i) Operating rules shall be established and posted at the operator's station of the hoist. Such rules shall include signal system and allowable line speed for various loads. Rules and notices shall be posted on the car frame or crosshead in a conspicuous location, including the statement "No riders allowed."

(ii) No person shall be allowed to ride on material hoists except for the purposes of inspection and maintenance.

(b) All entrances of the hoistways shall be protected by substantial gates or bars which shall guard the full width of the landing entrance. All hoistway entrance bars and gates shall be painted with diagonal contrasting colors, such as black and yellow stripes.

(i) Bars shall be not less than 2- by 4-inch wooden bars or the equivalent, located 2 feet from the hoistway line. Bars shall be located not less than 36 inches nor more than 42 inches above the floor.

(ii) Gates or bars protecting the entrances to hoistway shall be quipped with a latching device.

(c) Overhead protective covering of two-inch planking, 3/4-inch plywood or other solid material of equivalent strength shall be provided on the top of every material hoist cage or platform to prevent objects falling on the workers loading or unloading the hoist.

(i) The protective covering on the top of the cage or platform may be made in hinged sections that may be raised when hoisting long material.

(ii) When using a cage or platform for long material, the several pieces of the material shall be securely fastened together and made fast to the cage or platform, so that no part of the load can fall or project beyond the sides of the cage or platform.

(d) The operator's station of a hoisting machine shall be provided with overhead protection equivalent to tight planking not less than 2 inches thick. The support for the overhead protection shall be of equal strength.

(e) Hoist towers may be used with or without an enclosure on all sides. However, whichever alternative is chosen, the following applicable conditions shall be met:

(i) When a hoist tower is enclosed, it shall be enclosed on all sides for its entire height with a screen enclosure of 1/2-inch mesh, No. 18 U.S. gauge wire or equivalent, except for landing access.

(ii) When a hoist tower is not enclosed, the hoist platform or car shall be totally enclosed (caged) on all sides for the full height between the floor and the overhead protective covering with 1/2-inch mesh of No. 14 U.S. gauge wire or equivalent. The hoist platform enclosure shall include the required gates for loading and unloading. A 6-foot high enclosure shall be provided on the unused sides of the hoist tower at ground level.

(f) Car arresting devices shall be installed to function in case of rope failure.

(g) All material hoist towers shall be designed by a licensed professional engineer.

(h) All material hoists shall conform to the requirements of ANSI A10.5-1969, Safety Requirements for Material Hoists.

(3) Personnel hoists.

(a) Personnel hoists shall be provided for access and egress on all multi story buildings where vertical travel exceeds sixty feet from a ground level access point.

(b) Hoist towers outside the structure shall be enclosed for the full height on the side or sides used for entrance and exit to the structure. At the lowest landing, the enclosure on the sides not used for exit or entrance to the structure shall be enclosed to a height of at least 10 feet. Other sides of the tower adjacent to floors or scaffold platforms shall be enclosed to a height of 10 feet above the level of such floors or scaffolds.

(c) Towers inside of structures shall be enclosed on all four sides throughout the full height.

(d) Towers shall be anchored to the structure at intervals not exceeding 25 feet. In addition to tie-ins, a series of guys shall be installed. Where tie-ins are not practical the tower shall be anchored by means of guys made of wire rope at least one-half inch in diameter, securely fastened to anchorages to ensure stability.

(e) Hoistway doors or gates shall be not less than 6 feet 6 inches high and shall be provided with mechanical locks which cannot be operated from the landing side, and shall be accessible only to persons on the car.

(f) Cars shall be permanently enclosed on all sides and the top, except sides used for entrance and exit, which have car gates or doors.

(g) A door or gate shall be provided at each entrance to the car which shall protect the full width and height of the car entrance opening.

(h) Overhead protective covering of 2-inch planking, 3/4-inch plywood or other solid material of equivalent strength shall be provided on the top of every personnel hoist.

(i) Doors or gates shall be provided with electric contacts which do not allow movement of the hoist when door or gate is open.

(j) A signal device shall be installed in the elevator car and only operated by an attendant who shall give the signals for operation, when transporting workers.

(k) An electrical push button signalling device or other approved signalling system shall be provided at each floor landing connected to an annunciator in the car. The signal code shall be posted adjacent to the signal device at each and every work level and at operator's work level. All wording shall be black on a white card, in large clear letters.

(l) The elevator machine and controls shall be housed in as a protection against accidents and the weather, and the door kept locked against unauthorized entrance when operator is not in attendance.

(m) Safeties shall be capable of stopping and holding the car and rated load when traveling at governor tripping speed.

(n) Cars shall be provided with a capacity and data plate secured in a conspicuous place on the car or crosshead.

(o) Internal combustion engines shall not be permitted for direct drive.

(p) Normal and final terminal stopping devices shall be provided.

(q) An emergency stop switch shall be provided in the car and marked "stop."

(r) Ropes:

(i) The minimum number of hoisting ropes used shall be three for traction hoists and two for drum-type hoists.

(ii) The minimum diameter of hoisting and counterweight wire ropes shall be 1/2-inch.

(iii) Safety factors:

MINIMUM FACTORS OF SAFETY
FOR SUSPENSION WIRE ROPES

Rope speed in feet per minute:	Minimum factor of safety
50	7.60
75	7.75
100	7.95
125	8.10
150	8.25
175	8.40
200	8.60
225	8.75
250	8.90
300	9.20
350	9.50
400	9.75
450	10.00
500	10.25
550	10.45
600	10.70

(s) Following assembly and erection of hoists, and before being put in service, an inspection and test of all functions and safety devices shall be made under the supervision of a competent person. A similar inspection and test is required following major alteration of an existing installation. All hoists shall be inspected and tested at not more than 3-month intervals. Records shall be maintained and kept on file for the duration of the job.

(t) All personnel hoists used by employees shall be constructed of materials and components which meet the specifications for materials, construction, safety devices, assembly, and structural integrity as stated in the American National Standard A10.4-1963, Safety Requirements for Workmen's Hoists. The requirements of this subdivision do not apply to cantilever type personnel hoists.

(u) Wire rope shall be taken out of service when any of the following conditions exist:

(i) In running ropes, six randomly distributed broken wires in one lay or three broken wires in one strand in one lay;

(ii) Wear of one-third the original diameter of outside individual wires. Kinking, crushing, bird caging, or any other damage resulting in distortion of the rope structure;

(iii) Evidence of any heat damage from any cause;

(iv) Reductions from nominal diameter of more than three-sixty-fourths inch for diameters to and including three-fourths inch, one sixteenth inch for diameter seven-eights inch to 1 1/8 inches inclusive, three-thirty-seconds inch for diameters 1 1/4 to 1 1/2 inches inclusive;

(v) In standing ropes, more than two broken wires in one lay in sections beyond end connections or more than one broken wire at an end connection.

(v)(i) Personnel hoists used in bridge tower construction shall be approved by a registered professional engineer and erected under the supervision of a qualified engineer competent in this field.

(ii) When a hoist tower is not enclosed, the hoist platform or car shall be totally enclosed (caged) on all sides for the full height between the floor and the overhead protective covering with 3/4-inch mesh of No. 14 U.S. gauge wire or equivalent. The hoist platform enclosure shall include the required gates for loading and unloading.

(iii) These hoists shall be inspected and maintained on a weekly basis. Whenever the hoisting equipment is exposed to winds exceeding 35 miles per hour it shall be inspected and put in operable condition before reuse.

(4) All elevators, manlifts or other lifting devices must be installed and maintained in conformity with the require-

ments specified in the Washington state elevator laws and regulations adopted by the elevator section of the department of labor and industries.

Note: For additional information refer to chapter 296-100 WAC, safety requirements for material hoists.

[Statutory Authority: RCW 49.17.010, [49.17].040, [49.17].050. 02-12-098, § 296-155-530, filed 6/5/02, effective 8/1/02. Statutory Authority: Chapter 49.17 RCW. 94-15-096 (Order 94-07), § 296-155-530, filed 7/20/94, effective 9/20/94; 91-03-044 (Order 90-18), § 296-155-530, filed 1/10/91, effective 2/12/91. Statutory Authority: RCW 49.17.040 and 49.17.050. 86-03-074 (Order 86-14), § 296-155-530, filed 1/21/86; Order 74-26, § 296-155-530, filed 5/7/74, effective 6/6/74.]

WAC 296-155-535 Base-mounted drum hoists. (1) General requirements.

(a) Exposed moving parts such as gears, projecting screws, setscrews, chain, cables, chain sprockets, and reciprocating or rotating parts, which constitute a hazard, shall be guarded.

(b) All controls used during the normal operation cycle shall be located within easy reach of the operator's station.

(c) Electric motor operated hoists shall be provided with:

(i) A device to disconnect all motors from the line upon power failure and not permit any motor to be restarted until the controller handle is brought to the "off" position;

(ii) Where applicable, an overspeed preventive device;

(iii) A means whereby remotely operated hoists stop when any control is ineffective.

(d) All base-mounted drum hoists in use shall meet the applicable requirements for design, construction, installation, testing, inspection, maintenance, and operation, as prescribed by the manufacturer.

(2) Specific requirements. (Reserved.)

[Order 74-26, § 296-155-535, filed 5/7/74, effective 6/6/74.]

WAC 296-155-540 Overhead hoists. (1) General requirements.

(a) The safe working load of the overhead hoist, as determined by the manufacturer, shall be indicated on the hoist, and this safe working load shall not be exceeded.

(b) The supporting structure to which the hoist is attached shall have a safe working load equal to that of the hoist.

(c) The support shall be arranged so as to provide for free movement of the hoist and shall not restrict the hoist from lining itself up with the load.

(d) The hoist shall be installed only in locations that will permit the operator to stand clear of the load at all times.

(e) Air hoists shall be connected to an air supply of sufficient capacity and pressure to safely operate the hoist. All air hoses supplying air shall be positively connected to prevent their becoming disconnected during use.

(f) All overhead hoists in use shall meet the applicable requirements for construction, design, installation, testing, inspection, maintenance, and operation, as prescribed by the manufacturer.

(2) Specific requirements. (Reserved.)

[Order 74-26, § 296-155-540, filed 5/7/74, effective 6/6/74.]

WAC 296-155-545 Conveyors. (1) All conveyors in use shall meet the applicable requirements for design, construction, inspection, testing, maintenance, and operation, as prescribed in ANSI B20.1-1976, Safety Code for Conveyors, Cableways, and Related Equipment.

(2) Starting precautions.

(a) When the entire length of a conveyor is visible from the starting switch, the operator shall visually check to make certain that all persons are in the clear before starting the conveyor.

(b) When the entire length of the conveyor is not visible from the starting switch, a positive audible or visible warning system shall be installed and operated to warn persons that the conveyor will be started.

(c) All reasonable precautions shall be taken by the operator prior to starting a conveyor, to assure that no person is in a hazardous location where they may be injured when the conveyor is started.

(3) Riding and walking on conveyors.

(a) Riding on conveyor chains, belt, or bucket elevators shall be prohibited.

(b) Persons shall not be allowed to walk on conveyors except for emergency purposes and then only after the conveyor has been de-energized and the person can do so safely.

(c) Riding of conveyors shall only be permitted on the manlift steps and platforms with handholds attached and other safety factors as specified in chapter 296-82 WAC, Safety standards for existing belt manlifts.

(4) Stop controls.

(a) Means for stopping the motor or engine of a conveyor shall be provided at the operator's station.

(b) If the operator's station is at a remote point, similar provisions for stopping the motor or engine shall be provided at the motor or engine location.

(5) Emergency controls. Emergency stop switches shall be arranged so that the conveyor cannot be started again until the actuating stop switch has been reset to running or "on" position.

(6) Screw type conveyors. Screw or auger type conveyors shall be guarded to prevent employee contact with turning flights.

(7) Overhead conveyors.

(a) Where a conveyor passes over work areas, aisles, or thoroughfares, guards shall be provided to protect persons required to work below the conveyors.

(b)Where a conveyor crosses over an aisle or passageway, it shall be conspicuously marked by suitable signs, as required by Part E of this chapter.

(c) When the return strand of a conveyor operates within seven feet of the floor there shall be a trough provided of sufficient strength to carry the weight resulting from a broken chain. If the strands are over a passageway, a means shall be provided to catch and support the ends of the chain in the event of a break.

(8) Emergency stop.

(a) Conveyors shall be provided with an emergency stopping device (panic-type) which can be reached from the conveyor.

(b) The emergency stopping device shall be located near the material entrance and shall stop the conveyor a sufficient distance away from the hazard to prevent injury.

(c) Where the conveyor leading into such equipment is under constant control of an operator who has full view of the

material entrance who is located or restrained where they cannot possibly fall onto the conveyor an emergency stopping device is not mandatory.

(9) Conveyor lockout.

(a) Conveyors shall be locked out with a padlock at any time repair, maintenance, or clean-up work is being performed on the conveyor.

(b) Tags or push-button stops are not acceptable.

(10) Where conveyors are in excess of seven feet in height, means shall be provided to safely permit essential inspection and maintenance operations.

(11) Conveyor repair.

(a) Any part showing signs of significant wear shall be inspected carefully and replaced prior to reaching a condition where it may create a hazard.

(b) Replacement parts shall be equal to or exceed the manufacturer's specifications.

[Statutory Authority: Chapter 49.17 RCW. 94-15-096 (Order 94-07), § 296-155-545, filed 7/20/94, effective 9/20/94. Statutory Authority: RCW 49.17.040 and 49.17.050. 86-03-074 (Order 86-14), § 296-155-545, filed 1/21/86; Order 74-26, § 296-155-545, filed 5/7/74, effective 6/6/74.]

WAC 296-155-550 Aerial cableways. (1) Cableways shall be designed to withstand the maximum required load with a safety factor of five (5) on all its parts.

(2) Safety stay lines shall be installed at anchor ends and equal in strength to the cableway.

(3) Where towers are required they shall be securely guyed or constructed to carry the maximum sustained load.

(4) Towers shall be provided with ladderways to facilitate safe access for repairs and inspections.

(5) Towers shall have sufficient elevation to provide substantial clearance for cableway and loads carried over all contemplated work.

(6) Running lines and sheaves, where accessible, shall be guarded.

(7) The carrier, carrier sheaves, bearings, bucket latch and all working parts shall be lubricated and visually inspected daily.

(8) All the wire ropes shall be kept lubricated with proper lubricant.

(9) Daily visual inspection shall be made of the button line, especially at the buttons where abrasion is caused by the carrier rebound. Rubber and steel ferrule shock absorbers shall be placed at each end of buttons.

(10) All loading, unloading and working stations shall be adequately lighted for night operation. Clearance lights shall be installed on all high points under cableway.

[Order 74-26, § 296-155-550, filed 5/7/74, effective 6/6/74.]

WAC 296-155-555 Gin poles. (1) Gin poles shall be properly guyed according to the type used.

(2) Anchors may be of "dead men" or attached to some permanent stable structure.

(3) When the guy lines are anchored to a permanent structure, the anchors shall be distant at least one-half the height of the pole from its base, and when "dead men" are used, they shall be located a distance from the base at least one and one-half times the height of the pole.

(4) The pole shall be securely fastened at the foot to prevent kicking out during operation.

(5) Gin poles shall be of selected timber, sound and free from knots or other injurious defects.

(6) Allowable loads for spruce timbers used as gin poles. The allowable loads and the limiting lengths given are based on the U.S. Forest Products Laboratory Standard Recommendations for Spruce of Common Grade, based on pin connected ends for columns.

Actual	Length in feet		Allowable load capacity in tons
6" x 6".....	10		10.4
6" x 6".....	15		6.6
6" x 6".....	20		3.7
6" x 6".....	25	Max.	2.4
8" x 8".....	20		11.7
8" x 8".....	25		7.5
8" x 8".....	30		5.2
8" x 8".....	33	4" Max.	4.2
10" x 10".....	25		18.2
10" x 10".....	30		12.7
10" x 10".....	35		9.3
10" x 10".....	41	8" Max.	6.6
12" x 12".....	30		26.3
12" x 12".....	35		19.3
12" x 12".....	40		14.8
12" x 12".....	45		11.7
12" x 12".....	50	Max.	9.5

(7) When gin poles are spliced to increase their length, the splicing shall be made with heavy planking at least four feet long securely bolted to all four (4) sides of the pole. If splicing planks are spiked, they shall be securely lashed at the same points.

(8) Additional guy lines shall be attached at the point of splice.

[Order 74-26, § 296-155-555, filed 5/7/74, effective 6/6/74.]

WAC 296-155-560 Concrete bucket towers. (1) A concrete bucket tower located inside a structure, and which is three feet or less from any scaffold or the edge of the shaftway or floor opening in which it is installed, shall be enclosed on all sides with heavy wire netting formed of number sixteen U.S. gauge one and one-half inch mesh. Wood slats placed vertically and spaced not more than one and one-half inches apart may be used instead of the netting.

The enclosure shall extend at least eight feet above such scaffold or floor.

(2) A concrete bucket tower located outside a structure shall be enclosed to a height of eight feet at lower landing with heavy wire netting formed of number sixteen U.S. gauge wire one and one-half inch mesh or other suitable material.

(3) Openings with platforms shall be formed at each floor level, and the runway leading to the tower shall be guarded with standard railings and toeboards.

(4) If the bucket is discharged into a chute, the chute shall be substantially constructed of wood or metal and extend from the tower to the point where the concrete is to be poured, or transferred to vehicles or hoppers, and the chute shall be substantially supported.

(5) The pit shall be drained and deep enough so that any spill from the bucket will fall below the blocking on which the bucket rests while being filled.

(6) Persons shall not be allowed to work in the pit without first resting the bucket on strong timbers supported on two sides of the tower.

(7) The bucket tower shall be securely guyed at two or more elevations as may be necessary.

(8) The guide rails shall be carefully aligned and kept in good condition to prevent the bucket being caught or clogged while being hoisted.

(9) The sheaves over which the cable passes shall be firmly secured to overhead sheave beams and supporting frame work and the sheaves shall be kept lubricated.

(10) The hoisting cable shall be frequently inspected and renewed when broken wires or other defects are discovered.

(11) A platform provided with standard railings and toeboards shall be constructed at the point where the concrete is dumped into the chute. A ladder shall be fastened to one side of the tower to enable a person to reach the platform in safety.

(12) Workers shall be prohibited from riding in or on the bucket.

[Order 74-26, § 296-l55-560, filed 5/7/74, effective 6/6/74.]

WAC 296-155-565 Hoisting engines. (1) All gearing on hoisting engines shall be enclosed. Steam piping subject to contact shall be insulated and if electrical equipment is used, it shall be grounded.

(2) Hoisting engines shall be of ample capacity and equipped with brakes capable of sustaining one hundred and fifty percent of rated load for stopping and sustaining the maximum load in any position.

(3) Hoisting engines shall be protected against the weather and falling objects by a substantial cover.

(4) All hoisting equipment shall be frequently inspected, and brakes, gears and operating levers kept in working condition.

(5) Guards shall be provided to prevent persons coming in contact with hoisting cables.

(6) Brake drums shall be kept free of oil or grease.

(7) A positive operated pawl shall be used in addition to the brake to hold the load when it is suspended. Counter weight operated dogs are prohibited.

(8) Hoisting engines shall not be set up in the street when it can be avoided; but, if so located, they shall be completely housed.

(9) Only competent personnel shall operate material hoists.

(10) The operator shall not lift a load when a person is on the hoist, and all towers shall be posted to that effect, except as provided in other sections of this part.

(11) The operator shall be notified when any person goes up the tower ladder, or before any work is done on any part of the tower, overhead work, hoist or in the pit.

(12) The operator shall make daily inspections of all equipment before starting operations.

(13) When the hoisting engine is located close to the building operation, it shall be covered with a strong plank roof covering to protect the operator from falling objects.

(14) Exhaust steam pipes shall discharge overhead so as not to obstruct the view of the operator or scald persons.

(15) In the operation of hoists, the operator shall always give a warning sign or signal before starting.

(16) When hoisting machinery is set on an elevated platform such platform shall be of substantial construction and standard guard rails and toeboards shall be provided along all open sides of the platform.

(17) Material hoists of more than one drum capacity shall be equipped with brake controls.

(18) A safety strap shall be provided on the foot block of all hoists.

(19) When electric motors are used for hoisting equipment, they shall be operated only by qualified personnel.

(a) Installations shall be made in accordance with provisions of local and national electrical safety codes, and shall be made by experienced workers only.

(b) Inclosed switches and fuses shall always be used.

(c) Switchboards shall be screened, and a sign placed warning unauthorized persons to keep clear.

[Statutory Authority: Chapter 49.17 RCW. 94-15-096 (Order 94-07), § 296-155-565, filed 7/20/94, effective 9/20/94; Order 74-26, § 296-155-565, filed 5/7/74, effective 6/6/74.]

WAC 296-155-570 Rigging—Wire rope. (1) Whenever used in connection with work, employment, occupations or uses to which these standards are applicable, wire rope shall not be subjected to loads in excess of one-fifth the breaking load as given in the schedule of the cable manufacturer.

(2) Any wire rope showing 10% of its wires broken in a three foot length shall not be used. When cables deteriorate through rusting, wear, undue strain or other conditions to the extent of 15% of their original strength, use of cable shall be discontinued.

(3) Wire rope shall be frequently inspected for wear and other defects which may reduce the strength below the point of safe operation.

(4) If wire rope is received in a coil it shall be rolled out, on a surface free from grit, like a hoop and straightened out before being put on the sheaves. If it is received on a reel, the reel shall be mounted on a spindle or turntable and the rope then unwound.

(5) Wire rope shall be lubricated. A lubricant recommended by a wire rope manufacturer shall be used.

(6) Wire rope shall be securely fastened to drums by zinc plugs or suitable clamps, and at least two full turns of the rope shall remain on the winding drum.

(7) Wire rope shall be wound evenly on the drum and not allowed to lap one layer on another in an irregular fashion.

(8) Care shall be taken to prevent friction of wire ropes with other objects which could cause chafing or breaking of wires.

(9) In attaching U-type cable clamps, the U shall always be placed over the short end of the cable.

(10) The clamp nuts shall be tightened up frequently during the operation to prevent slipping.

(11) Thimbles shall be used in cable eyes whenever practicable.

(12) Fair leads shall be used ahead of cable drums, whenever practicable, and the fleet angle kept as flat as possible to promote proper spooling.

(13) All running lines of hoisting equipment, located within seven (7) feet of the ground or working level shall be boxed, railed off or otherwise guarded, or the operating area restricted.

(14) Wire rope which has been welded or been subject to welding of any kind shall not be used.

(15) No open hook shall be used to hoist a bucket, cage, spreader, or skip, nor in any circumstances where the dislodgement of the hook could cause a risk of injury to workers. A safety-hook, mousing, or shackle shall be employed in such circumstances.

(16) When shackles are used, shackle pins shall be secured to prevent accidental withdrawal.

(17) Where a wedge socket connector is used as a wire rope terminal, a single wire rope clip shall be installed in accordance with WAC 296-155-330 (3)(g).

(18) The wire rope shall not be burned off with heat. This may weld the ends of the wires and strands together.

[Statutory Authority: RCW 49.17.040 and 49.17.050. 86-03-074 (Order 86-14), § 296-155-570, filed 1/21/86; Order 74-26, § 296-155-570, filed 5/7/74, effective 6/6/74.]

WAC 296-155-59901 Table 1.

TABLE 1

STANDARD 6 x 7 WIRE ROPE[1]

Diameter	Approximate Weight Per Foot	Breaking Strength in Tons of 2,000 Pounds: Improved Plow Steel	Plow Steel	Mild Plow Steel
Inches	Pounds			
1/4	0.094	2.64	2.30	3.10
5/16	.15	4.10	3.56	3.10
3/8	.21	5.86	5.10	4.43
7/16	.29	7.93	6.90	6.00
1/2	.38	10.3	8.96	7.79
9/16	.48	13.0	11.3	9.82
5/8	.59	15.9	13.9	12.0
3/4	.84	22.7	19.8	17.2
7/8	1.15	30.7	26.7	23.2
1	1.50	39.7	34.5	30.0
1-1/8	1.90	49.8	43.3	37.7
1-1/4	2.34	61.0	53.0	46.1
1-3/8	2.84	73.1	63.6	55.3
1-1/2	3.38	86.2	75.0	65.2

[1]For these ropes with steel centers, add 7 1/2% to the above strengths. For these ropes when galvanized, deduct 10% from the above strengths.

[Order 74-26, § 296-155-580 (part), Table 1 (codified as WAC 296-155-59901), filed 5/7/74, effective 6/6/74.]

WAC 296-155-59902 Table 2.

TABLE 2

STANDARD 6 x 19 WIRE ROPE[1]

Diameter	Approximate Weight Per Foot	Breaking Strength in Tons of 2,000 Pounds: Improved Plow Steel	Plow Steel	Mild Plow Steel
Inches	Pounds			
1/4	0.10	2.74	2.39	2.07
5/16	.16	4.26	3.71	3.22
3/8	.23	6.10	5.31	4.62
7/16	.31	8.27	7.19	6.25
1/2	.40	10.7	9.35	8.13
9/16	.51	13.5	11.8	10.2
5/8	.63	16.7	14.5	12.6
3/4	.90	23.8	20.7	18.0
7/8	1.23	32.2	28.0	24.3
1	1.60	41.8	36.4	31.6
1 - 1/8	2.03	52.6	45.7	39.8
1 - 1/4	2.50	64.6	56.2	48.8
1 - 3/8	3.03	77.7	67.5	58.8
1 - 1/2	3.60	92.0	80.0	69.6
1 - 5/8	4.23	107.0	93.4	81.2
1 - 3/4	4.90	124.0	108.0	93.6
1 - 7/8	5.63	141.0	123.0	107.0
2	6.40	160.0	139.0	121.0
2 - 1/8	7.23	179.0	156.0	. . .
2 - 1/4	8.10	200.0	174.0	. . .
2 - 1/2	10.0	244.0	212.0	. . .
2 - 3/4	12.10	292.0	254.0	. . .

[1] For these ropes with steel centers, add 7 1/2% to the above strengths. For these ropes when galvanized, deduct 10% from the above strengths.

[Order 74-26, § 296-155-580 (part), Table 2 (codified as WAC 296-155-59902), filed 5/7/74, effective 6/6/74.]

WAC 296-155-59903 Table 3.

TABLE 3

STANDARD 8 x 19 WIRE ROPE[1]

Diameter	Approximate Weight Per Foot	Breaking Strength in Tons of 2,000 Pounds: Improved Plow Steel	Plow Steel
Inches	Pounds		
1/4	0.09	2.35	2.04
5/16	.14	3.65	3.18
3/8	.20	5.24	4.55
7/16	.28	7.09	6.17
1/2	.36	9.23	8.02
9/16	.46	11.6	10.1
5/8	.57	14.3	12.4
3/4	.82	20.5	17.8
7/8	1.11	27.7	24.1
1	1.45	36.0	31.3
1 - 1/8	1.84	45.3	39.4
1 - 1/4	2.27	55.7	48.4
1 - 3/8	2.74	67.1	58.3
1 - 1/2	3.26	79.4	69.1

[1] For these ropes with steel centers, add 7 1/2% to the above strengths. For these ropes when galvanized, deduct 10% from the above strengths.

[Order 74-26, § 296-155-580 (part), Table 3 (codified as WAC 296-155-59903), filed 5/7/74, effective 6/6/74.]

WAC 296-155-59904 Table 4.

TABLE 4

STANDARD 6 x 37 WIRE ROPE[1]

Diameter	Approximate Weight Per Foot	Breaking Strength in Tons of 2,000 Pounds: Improved Plow Steel	Plow Steel
Inches	Pounds		
1/4	0.10	2.59	2.25
5/16	.16	4.03	3.50

TABLE 4

STANDARD 6 x 37 WIRE ROPE[1]

Diameter	Approximate Weight Per Foot	Breaking Strength in Tons of 2,000 Pounds: Improved Plow Steel	Plow Steel
Inches	Pounds		
3/8	.22	5.77	5.02
7/16	.30	7.82	6.80
1/2	.39	10.2	8.85
9/16	.49	12.9	11.2
5/8	.61	15.8	13.7
3/4	.87	22.6	19.6
7/8	1.19	30.6	26.6
1	1.55	39.8	34.6
1 - 1/8	1.96	50.1	43.5
1 - 1/4	2.42	61.5	53.5
1 - 3/8	2.93	74.1	64.5
1 - 1/2	3.49	87.9	76.4
1 - 5/8	4.09	103.0	89.3
1 - 3/4	4.75	119.0	103.0
1 - 7/8	5.45	136.0	118.0
2	6.20	154.0	134.0
2 - 1/8	7.00	173.0	150.0
2 - 1/4	7.85	193.0	168.0
2 - 1/2	9.69	236.0	205.0
2 - 3/4	11.72	284.0	247.0
3	13.95	335.0	291.0
3 - 1/4	16.37	390.0	339.0
3 - 1/2	19.40	449.0	390.0

[1] For these ropes with steel centers, add 7 1/2% to the above strengths. For these ropes when galvanized, deduct 10% from the above strengths.

[Statutory Authority: Chapter 49.17 RCW. 91-24-017 (Order 91-07), § 296-155-59904, filed 11/22/91, effective 12/24/91; Order 74-26, § 296-155-580 (part), Table 4 (codified as WAC 296-155-59904), filed 5/7/74, effective 6/6/74.]

WAC 296-155-59905 Table 5.

TABLE 5

STANDARD 6 x 19 ELEVATOR ROPE

DIAMETER	Approximate Weight Per Foot	BREAKING STRENGTH: Iron	Traction Steel	High-Rise Traction Steel
Inches	Pounds	Pounds	Pounds	Pounds
3/16	0.06	1,300	. . .	. . .
1/4	.10	2,200	3,600	. . .
5/16	.16	3,200	5,600	. . .
3/8	.23	5,000	8,200	. . .
7/16	.31	6,400	11,000	. . .
1/2	.40	8,400	14,500	. . .
9/16	.51	10,600	18,500	. . .
5/8	.63	12,800	23,000	. . .
11/16	.76	. . .	27,000	30,000
3/4	.90	18,200	32,000	. . .
13/16	1.06	. . .	37,000	46,000
7/8	1.23	24,800	42,000	. . .
15/16	1.41	. . .	48,000	60,000
1	1.60	32,000	54,000	. . .
1 - 1/16	1.81	. . .	61,000	. . .

[Order 74-26, § 296-155-580 (part), Table 5 (codified as WAC 296-155-59905), filed 5/7/74, effective 6/6/74.]

WAC 296-155-59906 Table 6.

TABLE 6

STANDARD 8 x 19 ELEVATOR ROPE

DIAMETER	Approximate Weight Per Foot	BREAKING STRENGTH: Iron	Traction Steel	High-Rise Traction Steel
Inches	Pounds	Pounds	Pounds	Pounds
3/16	0.05	1,000	…	…
1/4	.09	1,800	3,600	…
5/16	.14	2,900	5,600	…
3/8	.20	4,200	8,200	…
7/16	.28	5,600	11,000	…
1/2	.36	7,200	14,500	…
9/16	.46	9,200	18,500	…
5/8	.57	11,200	23,000	…
11/16	.69	…	27,000	30,000
3/4	.82	16,000	32,000	…
13/16	.96	…	37,000	46,000
7/8	1.11	21,400	42,000	…
15/16	1.27	…	48,000	60,000
1	1.45	28,000	54,000	…
1 - 1/16	1.64	…	61,000	…

[Order 74-26, § 296-155-580 (part), Table 6 (codified as WAC 296-155-59906), filed 5/7/74, effective 6/6/74.]

WAC 296-155-59907 Table 7.

TABLE 7

STANDARD 5 x 19 MARLINE CLAD ROPE[1]

DIAMETER: Before Serving	After Serving	Approximate Weight Per Foot	Breaking Strength in Tons of 2,000 Pounds: Plow Steel	Mild Plow Steel
Inches	Inches	Pounds		
1/4	9/16	0.21	2.17	1.89
5/16	5/8	.28	3.37	2.93
3/8	11/16	.36	4.82	4.20
7/16	3/4	.42	6.53	5.68
1/2	13/16	.51	8.50	7.39
9/16	7/8	.62	10.7	9.31
5/8	1	.81	13.2	11.4
3/4	1 - 1/8	1.10	18.8	16.4
7/8	1 - 1/4	1.70	25.5	22.1
1	1 - 3/8	1.32	33.7	28.7
1 - 1/8	1 - 1/2	2.12	41.6	36.2
1 - 1/4	1 - 5/8	2.58	51.1	44.4
1 - 3/8	1 - 3/4	3.14	61.4	53.4
1 - 1/2	1 - 7/8	3.69	. . .	. . .
1 - 5/8	2	4.29	. . .	. . .
1 - 3/4	2 - 1/8	5.00	. . .	. . .

[1] For these ropes with steel centers, add 7 1/2% to the above strengths. For these ropes when galvanized, deduct 10% from the above strengths.

[Order 74-26, § 296-155-580 (part), Table 7 (codified as WAC 296-155-59907), filed 5/7/74, effective 6/6/74.]

WAC 296-155-59908 Table 8.

TABLE 8
STANDARD 18 x 7 NONROTATING ROPE

DIAMETER	Approximate Weight Per Foot	Breaking Strength in Tons of 2,000 Pounds	
		Improved Plow Steel	Plow Steel
Inches	Pounds		
3/8	0.24	5.59	4.86
7/16	.33	7.58	6.59
1/2	.43	9.85	8.57
9/16	.55	12.4	10.8
5/8	.68	15.3	13.3
3/4	.97	21.8	19.0
7/8	1.32	29.5	25.7
1	1.73	38.3	33.3
1-1/8	2.19	48.2	41.9
1-1/4	2.70	59.2	51.5
1-3/8	3.27	71.3	62.0
1-1/2	3.89	84.4	73.4
1-5/8	4.57	98.4	85.6
1-3/4	5.30	114.0	98.8

[Order 74-26, § 296-155-580 (part), Table 8 (codified as WAC 296-155-59908), filed 5/7/74, effective 6/6/74.]

WAC 296-155-59909 Table 9.

TABLE 9
STANDARD 6 x 12 GALVANIZED
RUNNING ROPE AND HAWSERS

DIAMETER	Approximate Weight Per Foot	Breaking Strength in Tons of 2,000 Pounds		
		Galvanized Improved Plow Steel	Galvanized Plow Steel	Galvanized Iron
Inches	Pounds			
5/16	0.10	2.34	2.04	0.905
3/8	.15	3.36	2.92	1.30
7/16	.20	4.55	3.95	1.76
1/2	.26	5.91	5.14	2.28
9/16	.33	7.45	6.48	2.88
5/8	.41	9.16	7.97	3.54
3/4	.59	13.1	11.4	5.06
13/16	.69	15.3	13.3	5.92
7/8	.80	17.7	15.4	6.85
1	1.05	23.0	20.0	8.89
1- 1/16	1.19	25.9	22.5	10.0
1- 1/8	1.33	29.0	25.2	. . .
1- 3/16	1.48	32.2	28.0	. . .
1- 1/4	1.64	35.6	30.9	. . .
1- 3/8	1.99	42.8	37.2	. . .
1- 7/16	2.17	46.7	40.6	. . .
1- 1/2	2.36	50.7	44.1	. . .
1- 5/8	2.77	59.2	51.4	. . .
1- 11/16	2.99	63.6	55.3	. . .
1- 3/4	3.22	68.3	59.4	. . .
1- 15/16	3.45	78.0	63.5	. . .
1- 15/16	3.94	83.0	72.2	. . .
2	4.20	88.2	76.7	. . .
2- 1/16	4.47	93.6	81.4	. . .

[Order 74-26, § 296-155-580 (part), Table 9 (codified as WAC 296-155-59909), filed 5/7/74, effective 6/6/74.]

WAC 296-155-59910 Table 10.

TABLE 10
STANDARD 6 x 25 GALVANIZED STEEL
MOORING LINES AND HAWSERS

DIAMETER	Approximate Weight Per Foot	Breaking Strength in Tons of 2,000 Pounds	
		Galvanized Improved Plow Steel	Galvanized Plow Steel
Inches	Pounds		
3/8	0.194	4.77	4.14
1/2	.35	8.40	7.30
5/8	.54	13.0	11.3
3/4	.78	18.6	16.2
13/16	.91	21.8	19.0
7/8	1.06	25.2	21.9
1	1.38	32.8	28.5
1- 1/16	1.56	36.9	32.1
1- 1/8	1.75	41.2	35.9
1- 3/16	1.95	45.9	39.9
1- 1/4	2.16	50.7	44.1
1- 3/8	2.61	61.0	53.0
1- 7/16	2.85	66.5	57.9
1- 1/2	3.11	72.3	62.9
1- 5/8	3.64	84.5	73.4
1- 11/16	3.93	90.9	79.0
1- 3/4	4.23	97.5	84.8
1- 13/16	4.53	104.0	90.8
1- 15/16	5.18	119.0	103.0
2	5.52	126.0	110.0
2- 1/16	5.87	134.0	116.0

[Order 74-26, § 296-155-580 (part), Table 10 (codified as WAC 296-155-59910), filed 5/7/74, effective 6/6/74.]

WAC 296-155-59911 Table 11.

TABLE 11
STANDARD 6 x 37 GALVANIZED STEEL HAWSERS

DIAMETER	Approximate Weight Per Foot	Breaking Strength in Tons of 2,000 Pounds	
		Improved Plow Steel	Plow Steel
Inches	Pounds		
3/4	0.87	21.0	18.2
13/16	1.02	24.5	21.3
7/8	1.19	28.4	24.7
1	1.55	36.9	32.1
1- 1/16	1.75	41.6	36.1
1- 1/8	1.96	46.5	40.4
1- 3/16	2.19	51.7	44.9
1- 1/4	2.42	57.1	49.7
1- 3/8	22.93	68.8	59.8
1- 7/16	3.20	75.0	65.3
1- 1/2	3.49	81.5	70.9
1- 5/8	4.09	95.3	82.9
1- 11/16	4.41	103.0	89.2
1- 3/4	4.75	110.0	95.7
1- 13/16	5.09	118.0	102.0
1- 15/16	5.82	134.0	117.0
2	6.20	143.0	124.0
2- 1/16	6.59	151.0	132.0
2- 1/8	7.00	160.0	139.0
2- 1/4	7.85	179.0	156.0
2- 5/16	8.29	189.0	164.0
2- 3/8	8.74	199.0	173.0

[Order 74-26, § 296-155-580 (part), Table 11 (codified as WAC 296-155-59911), filed 5/7/74, effective 6/6/74.]

WAC 296-155-59912 Table 12.

TABLE 12

STANDARD 6 x 25 TYPE "B" FLATTENED STRAND WIRE ROPE[1]

DIAMETER	Approximate Weight Per Foot	Breaking Strength in Tons of 2,000 Pounds: Improved Plow Steel	Breaking Strength in Tons of 2,000 Pounds: Plow Steel
Inches	Pounds		
3/8	0.25	6.71	…
1/2	.45	11.8	8.94
9/16	.57	14.9	11.2
5/8	.70	18.3	13.9
3/4	1.01	26.2	19.8
7/8	1.39	35.4	26.8
1	1.80	46.0	34.8
1 - 1/8	2.28	57.9	43.8
1 - 1/4	2.81	71.0	53.7
1 - 3/8	3.40	85.5	…
1 - 1/2	4.05	101.0	…
1 - 5/8	4.75	118.0	…
1 - 3/4	5.51	136.0	…
2	7.20	176.0	…
2 - 1/4	9.10	220.0	…
2 - 1/2	11.20	269.0	…
2 - 3/4	13.60	321.0	…

[1] For these ropes when galvanized, deduct 10 percent from the above strengths.

[Order 74-26, § 296-155-580 (part), Table 12 (codified as WAC 296-155-59912), filed 5/7/74, effective 6/6/74.]

WAC 296-155-59913 Table 13.

TABLE 13

STANDARD 6 x 30 TYPE "G" FLATTENED STRAND WIRE ROPE[1]

DIAMETER	Approximate	Breaking Strength in Tons of 2,000 Pounds	
Inches	Pounds		
5/8	0.70	18.3	13.9
3/4	1.01	26.2	19.8
7/8	1.39	35.4	26.8
1	1.80	46.0	34.8
1- 1/8	2.28	57.9	43.8
1- 1/4	2.81	71.0	53.7
1- 3/8	3.40	85.5	…
1- 1/2	4.05	101.0	…
1- 5/8	4.75	118.0	…
1- 3/4	5.51	136.0	…
2	7.20	176.0	…
2- 1/4	9.10	220.0	…
2- 1/2	11.20	269.0	…
2- 3/4	13.60	321.0	…

[1] For these ropes with steel centers, add 7 1/2% to above strengths.

[Order 74-26, § 296-155-580 (part), Table 13 (codified as WAC 296-155-59913), filed 5/7/74, effective 6/6/74.]

WAC 296-155-59914 Table 14.

TABLE 14

STANDARD 6 x 8 TYPE "D" FLATTENED STRAND WIRE ROPE

DIAMETER	Approximate Weight Per Foot	Breaking Strength in Tons of 2,000 Pounds: Improved Plow Steel	Breaking Strength in Tons of 2,000 Pounds: Plow Steel
Inches	Pounds		
1/2	0.45	11.1	8.37
5/8	.70	17.1	12.9
3/4	1.01	24.4	18.5
7/8	1.39	33.0	24.9
1	1.80	42.7	32.3
1 - 1/8	2.28	53.5	40.5
1 - 1/4	2.81	65.5	49.5
1 - 3/8	3.40	78.6	59.4
1 - 1/2	4.05	92.7	70.1

[Order 74-26, § 296-155-580 (part), Table 14 (codified as WAC 296-155-59914), filed 5/7/74, effective 6/6/74.]

WAC 296-155-59915 Table 15.

TABLE 15

STANDARD 6 x 6 x 7 TILLER ROPE[1]

DIAMETER	Approximate Weight Per Foot	Breaking Strength in Tons of 2,000 Pounds: Plow Steel	Breaking Strength in Tons of 2,000 Pounds: Iron
Inches	Pounds		
1/4	0.07	1.31	0.584
5/16	.11	2.05	.908
3/8	.16	2.93	1.30
7/16	.21	3.98	1.77
1/2	.28	5.18	2.30
9/16	.35	6.53	2.90
5/8	.43	8.04	3.57

[1] For these ropes with steel centers, add 7 1/2% to above strengths.

[Order 74-26, § 296-155-580 (part), Table 15 (codified as WAC 296-155-59915), filed 5/7/74, effective 6/6/74.]

WAC 296-155-59916 Table 16.

TABLE 16

STANDARD 9 x 4 GALVANIZED MAST ARM ROPE

Diameter Inches	Approximate Weight Per Foot Pounds	Breaking Strength In Pounds
1/4	0.070	1,100
5/16	.107	1,530
3/8	.158	2,200

[Order 74-26, § 296-155-580 (part), Table 16 (codified as WAC 296-155-59916), filed 5/7/74, effective 6/6/74.]

WAC 296-155-59917 Table 17.

TABLE 17

STANDARD FLAT ROPE

Width and Thickness	Number of Ropes	Approximate Weight Per Foot	Breaking Strength in Tons of 2,000 Pounds: Plow Steel	Breaking Strength in Tons of 2,000 Pounds: Mild Plow Steel
Inches		Pounds		
1/4 x 1-1/2	7	0.69	16.8	14.6
1/4 x 2	9	.88	21.7	18.8
1/4 x 2-1/2	11	1.15	26.5	23.0
1/4 x 3	13	1.34	31.3	27.2
5/16 x 1-1/2	5	.77	18.5	16.0
5/16 x 2	7	1.05	25.8	22.4
5/16 x 2-1/2	9	1.33	33.2	28.8
5/16 x 3	11	1.61	40.5	35.3
5/16 x 3-1/2	13	1.89	47.9	41.7
5/16 x 4	15	2.17	55.3	48.1
3/8 x 2	6	1.25	31.4	27.3
3/8 x 2-1/2	8	1.64	41.8	36.4

TABLE 17
STANDARD FLAT ROPE

Width and Thickness	Number of Ropes	Approximate Weight Per Foot	Breaking Strength in Tons of 2,000 Pounds: Plow Steel	Breaking Strength in Tons of 2,000 Pounds: Mild Plow Steel
Inches		Pounds		
3/8 x 3	9	1.84	47.1	40.9
3/8 x 3-1/2	11	2.23	57.5	50.0
3/8 x 4	12	2.44	62.7	54.6
3/8 x 4-1/2	14	2.83	73.2	63.7
3/8 x 5	15	3.03	78.4	68.2
3/8 x 5-1/2	17	3.42	88.9	77.3
3/8 x 6	18	3.63	94.1	81.9
1/2 x 2-1/2	6	2.13	54.5	47.4
1/2 x 3	7	2.47	63.6	55.4
1/2 x 3-1/2	8	2.82	72.7	63.3
1/2 x 4	9	3.16	81.8	71.2
1/2 x 4-1/2	10	3.82	90.9	79.1
1/2 x 5	12	4.16	109.0	94.9
1/2 x 5-1/2	13	4.50	118.0	103.0
1/2 x 6	14	4.85	127.0	111.0
1/2 x 7	16	5.85	145.0	126.0
5/8 x 3-1/2	6	3.40	85.8	74.6
5/8 x 4	7	3.95	100.0	87.1
5/8 x 4-1/2	8	4.50	114.0	99.5
5/8 x 5	9	5.04	129.0	112.0
5/8 x 5-1/2	10	5.59	143.0	124.0
5/8 x 6	11	6.14	157.0	137.0
5/8 x 7	13	7.23	186.0	162.0
5/8 x 8	15	8.32	214.0	186.0
3/4 x 5	8	6.50	165.0	143.0
3/4 x 6	9	7.31	185.0	161.0
3/4 x 7	10	8.13	206.0	179.0
3/4 x 8	11	9.70	227.0	197.0
7/8 x 5	7	7.50	190.0	165.0
7/8 x 6	8	8.56	217.0	188.0
7/8 x 7	9	9.63	244.0	212.0
7/8 x 8	10	10.69	271.0	236.0

[Order 74-26, § 296-155-580 (part), Table 17 (codified as WAC 296-155-59917), filed 5/7/74, effective 6/6/74.]

WAC 296-155-59918 Table 18.

TABLE 18
STANDARD 6 x 12 MARLINE CLAD GRAIN-SHOVEL ROPE

Before Serving Inches	After Serving Inches	Approximate Weight Per Foot Pounds	Breaking Strength Tons of 2,000 Pounds
3/4	5/8	0.25	2.50
7/8	3/4	.43	5.50

[Order 74-26, § 296-155-580 (part), Table 18 (codified as WAC 296-155-59918), filed 5/7/74, effective 6/6/74.]

WAC 296-155-59919 Table 19.

TABLE 19
STANDARD 6 x 7 IRON, BRIGHT, AND GALVANIZED SASH CORDS

DIAMETER	Approximate Weight Per Foot	BREAKING STRENGTH: Hard Drawn: Bright	Hard Drawn: Galvanized	Annealed (iron): Bright or Galvanized
Inches	Pounds	Pounds	Pounds	Pounds
1/16	0.006	140	126	77
3/32	.103	315	283	172
1/8	.023	560	504	306
5/32	.038	840	756	478

TABLE 19
STANDARD 6 x 7 IRON, BRIGHT, AND GALVANIZED SASH CORDS

DIAMETER	Approximate Weight Per Foot	BREAKING STRENGTH: Hard Drawn: Bright	Hard Drawn: Galvanized	Annealed (iron): Bright or Galvanized
Inches	Pounds	Pounds	Pounds	Pounds
3/16	.053	1,150	1,035	688
7/32	.072	1,570	1,413	940
1/4	.094	2,040	1,836	1,225

[Order 74-26, § 296-155-580 (part), Table 19 (codified as WAC 296-155-59919), filed 5/7/74, effective 6/6/74.]

WAC 296-155-59920 Table 20.

TABLE 20
STANDARD 6 x 7 GALVANIZED IRON RIGGING AND GUY ROPE

Diameter Inches	Approximate Weight Per Foot Pounds	Breaking Strength in Tons of 2,000 Pounds
6 Strands:		
1/4	0.94	0.918
5/16	.15	1.42
3/8	.21	2.04
7/16	.29	2.76
1/2	.38	3.58
9/16	.48	4.51
5/8	.59	5.54
3/4	.84	7.90
13/16	.99	9.23
7/8	1.15	10.7
1	1.50	13.8
1 1/16	1.70	15.5
1 1/8	1.90	17.3
1 3/16	2.12	19.2
1 1/4	2.34	21.2

[Order 74-26, § 296-155-580 (part), Table 20 (codified as WAC 296-155-59920), filed 5/7/74, effective 6/6/74.]

PART M
MOTOR VEHICLES, MECHANIZED EQUIPMENT, AND MARINE OPERATIONS

WAC 296-155-600 Definitions applicable to this part. (1) "Apron" means the area along the waterfront edge of the pier or wharf.

(2) "Bearing cap" means:

(a) A slab of reinforced concrete or a heavy timber and plank platform covering the top of a group of piles for the purpose of typing them together and transmitting to them as a group the superimposed load.

(b) A metal plate placed across the top of a steel tube pile to distribute the load from the steel tube to the concrete.

(3) "Bearing pile" means a column of wood, metal or concrete or a combination of two or more of these materials, driven, jacked, or sunk with a water jet, into the earth to transmit and distribute loads to strata below the surface.

(4) "Bulwark" means the side of a ship above the upper deck.

(5) "Caisson pile" means a concrete pile case in an outer casing consisting of a series of telescoping steel tubes, the top section being the largest and usually twenty inches or more in diameter.

(6) "Coaming" means the raised frame, as around a hatchway in the deck, to keep out water.

(7) "Composite pile" means a pile which consists of a concrete pile superimposed on a wood pile.

(8) "Jacob's ladder" means a marine ladder of rope or chain with wooden or metal rungs.

(9)(a) A "pedestal type" concrete pile means a cast-in-place pile with an enlarged (mushroom) base or foot.

(b) A "tapered type" concrete pile means a cast-in-place pile cast in a tapered metal shell.

(10) "Precast concrete pile" means a pile which is cast in a form above ground.

(11) "Driving cap" means a device placed on the top of a pile to prevent its breakage or injury during the driving operation.

(12) "H-pile" means a pile formed of a structural steel column of "H" section.

(13) "Pile driver" means a device or piece of equipment used in driving piles.

(14) "Pretest or jack pile" means a steel cylinder pile driven in section beneath an existing building and filled with concrete.

(15) "Rail," for the purpose of WAC 296-155-630, means a light structure serving as a guard at the outer edge of a ship's deck.

(16) "Sheet piling" means a continuous vertical barricade consisting of squared timbers driven edge to edge, either square edged or tongued and grooved, or of a series of interlocking steel shapes, to form a temporary wall about an excavation, and shored and braced as necessary.

(17) "Steel-tube" means a concrete-filled steel cylinder, consisting of an open or closed-end steel tube or cylinder.

(18) "Wood pile" means a pile which is formed from the trunk of a tree or dimension timbers.

[Order 74-26, § 296-155-600, filed 5/7/74, effective 6/6/74.]

WAC 296-155-605 Equipment. (1) General requirements.

(a) All equipment left unattended at night, adjacent to a highway in normal use, or adjacent to construction areas where work is in progress, shall have appropriate lights or reflectors, or barricades equipped with appropriate lights or reflectors, to identify the location of the equipment.

(b) All tire servicing of multipiece and single-piece rim wheels are subject to the requirements of WAC 296-155-61701 through 296-155-61713.

(c)(i) Heavy machinery, equipment, or parts thereof, which are suspended or held aloft by use of slings, hoists, or jacks shall be substantially blocked or cribbed to prevent falling or shifting before employees are permitted to work under or between them. Bulldozer and scraper blades, end-loader buckets, dump bodies, and similar equipment, shall be either fully lowered or blocked when being repaired or when not in use. All controls shall be in a neutral position, with the motors stopped and brakes set, unless work being performed required otherwise.

(ii) Whenever the equipment is parked, the parking brake shall be set. Equipment parked on inclines shall have the wheels chocked and the parking brake set.

(d) The use, care and charging of all batteries shall conform to the requirements of part I of this chapter.

(e) All cab glass shall be safety glass, or equivalent, that introduces no visible distortion affecting the safe operation of any machine covered by this part.

(f) All equipment covered by this part shall comply with the requirements of WAC 296-155-525 (3)(a) when working or being moved in the vicinity of power lines or energized transmitters.

(g) Where traffic is diverted onto dusty surfaces, good visibility shall be maintained by the suppression of dust, through the periodic application of oil or water to the grade surface, as required.

(h) No equipment, vehicle, tool, or individual shall operate within 10 feet of any power line or electrical distribution equipment except in conformity with the requirements of WAC 296-155-525 (3)(a).

(2) Specific requirements. (Reserved.)

[Statutory Authority: RCW 49.17.010, [49.17].040, [49.17].050 and [49.17].060. 98-05-046, § 296-155-605, filed 2/13/98, effective 4/15/98. Statutory Authority: RCW 49.17.040 and 49.17.050. 86-03-074 (Order 86-14), § 296-155-605, filed 1/21/86; Order 74-26, § 296-155-605, filed 5/7/74, effective 6/6/74.]

WAC 296-155-610 Motor vehicles on construction sites. (1) Scope. Motor vehicles covered by this section include any vehicles that operate on a construction site. The requirements of this section do not apply to the equipment regulated by WAC 296-155-615, Material handling equipment.

(2) General requirements for motor vehicles.

(a) Braking systems.

• All vehicles must have:

– A service brake system;

– An emergency brake system;

AND

– A parking brake system.

• These systems must be maintained in operable condition.

• These systems may use common components.

(b) Before leaving a motor vehicle unattended:

(i) The motor must be stopped.

(ii) The parking brake must be engaged and the wheels turned into curb or berm when parked on an incline.

(iii) If parking on an incline and there is no curb or berm, the wheels must be chocked or otherwise secured.

(c) Lighting systems. All vehicles, or combination of vehicles, must have brake lights in operable condition, regardless of light conditions.

• Employers must meet the requirements in Table 1 below.

Table 1

If:	Then:
Visibility conditions warrant additional light.	All vehicles, or combinations of vehicles, in use must be equipped with: • At least two headlights in operable condition; **AND** • At least two taillights in operable condition.

(d) All vehicles must be equipped with an operable audible warning device (horn) at the operator's station.

(e) Operating vehicles, other than passenger cars and pickups, with an obstructed view to the rear. Employers must prohibit the use of any motor vehicle equipment that has an obstructed view to the rear unless the vehicle meets one of the following:

• Has an operable automatic reverse signal alarm audible above the surrounding noise level and audible no less than fifteen feet from the rear of the vehicle;

OR

• Is backed up when an observer signals that it is safe to do so.

Reference: For requirements on operating dump trucks in reverse, see (f) of this subsection, Operating dump trucks in reverse.

Note: • If the surrounding noise level is so loud that reverse signal alarms are not effective, then an observer must be used.
• An observer can be any individual at the construction site, except a person performing the duties of a flagger. The observer must:
– Be in the direct line-of-sight or able to communicate with the driver.
– Be able to see the entire backing zone.
– Continue to provide direction to the driver until:
■ The driver reaches the destination and stops;
OR
■ There are no longer employees in the backing zone and it is reasonable to expect that no employee(s) will enter the backing zone.

(f) Operating dump trucks in reverse.

(i) You must make sure the dump truck has an operable automatic reverse signal alarm:

• Audible above the surrounding noise level;

AND

• Audible no less than fifteen feet from the rear of the vehicle.

(ii) Before backing a dump truck the driver must determine that no one is currently in the backing zone and it is reasonable to expect that no employee(s) will enter the backing zone while operating the dump truck in reverse.

If employee(s) are in the backing zone or it is reasonable to expect that an employee(s) will enter the backing zone, you must make sure the truck is backed up only when:

• An observer signals that it is safe to back;

OR

• An operable mechanical device that provides the driver a full view behind the dump truck is used, such as a video camera.

Note: The following diagram defines the backing zone. Distances are reported in feet.

DUMP TRUCK BACKING

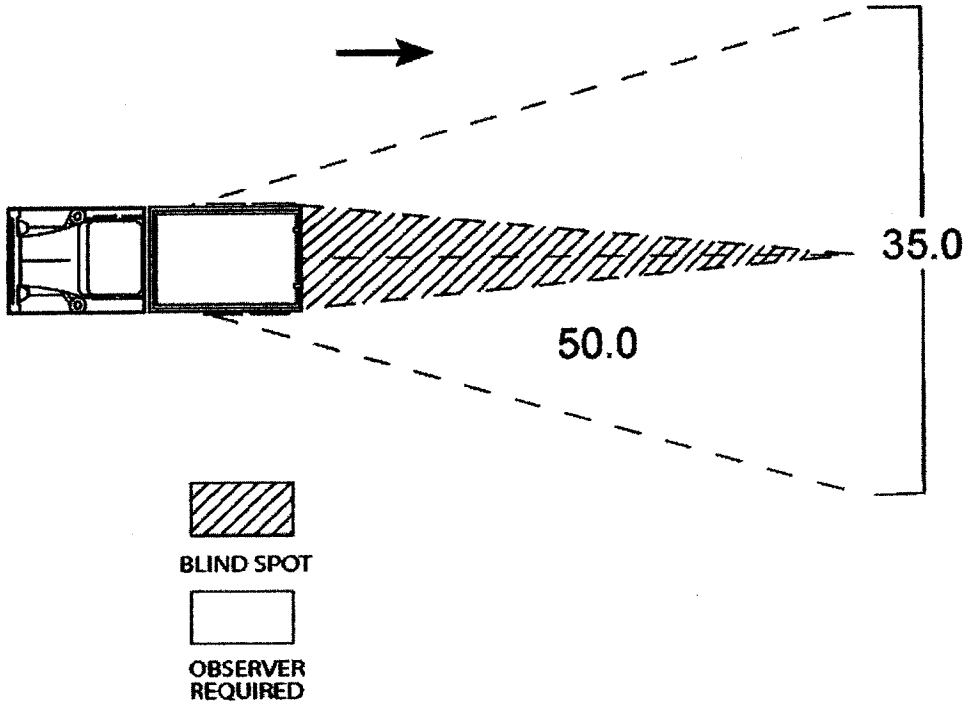

Exemption: • Employees are considered protected when they are on the opposite side of a fixed barrier such as:
– A jersey barrier;
– Heavy equipment (such as a paving machine);
OR
– A six-inch concrete curb.

Note: The term "**dump trucks**" includes both belly and rear dump trucks with a minimum payload of four yards.

(g) Windshields.

• All vehicles with cabs must be equipped with:

– Windshields;

– Powered wipers; and

– Rear view mirrors.

• Cracked and broken glass must be replaced.

• Vehicles operating in areas or under conditions that cause fogging or frosting of the windshields must be equipped with operable defogging or defrosting devices.

(h) Haulage vehicles. Employers must meet the requirement in Table 2 below.

Table 2

If:	Then:
Any haulage vehicles payload is filled by: • Cranes; • Power shovels; • Loaders; **OR** • Similar equipment.	You must have a cab shield and/or canopy adequate to protect the operator from shifting or falling materials.

(i) Securing material and employees.

• Tools and material must be secured to prevent movement when transported in the same compartment as employees.

• Vehicles used to transport employees must have seats firmly secured and adequate for the number of employees to be carried.

• Seat belts and anchorages meeting the requirements of 49 CFR Part 571 (Department of Transportation, Federal Motor Vehicle Safety Standards) must be installed in all motor vehicles and used by all occupants of the vehicle.

(j) Trucks with dump bodies.

• Trucks with dump bodies or raisable platforms, beds, or boxes must be equipped with positive means of support, permanently attached. This positive means of support must be capable of being locked in position to prevent accidental lowering of the body while maintenance or inspection work is being done.

• Operating levers, controlling hoisting or dumping devices on haulage bodies, must be equipped with a latch or other device, such as a detent switch, which will prevent accidental starting or tripping of the mechanism.

• Trip handles for tailgates of dump trucks must be so arranged that, in dumping, the operator will be in the clear.

(k) Fenders on motor vehicle equipment.

• All rubber-tired motor vehicle equipment must be equipped with fenders.

• Mud flaps may be used in lieu of fenders whenever motor vehicle equipment is not designed for fenders.

(l) Vehicle safety inspections.

• All vehicles in use must be checked at the beginning of each shift to make sure that the following parts, equipment, and accessories are in safe operating condition and free of apparent damage that could cause failure while in use:

– Service brakes (including trailer brake connections);
– Parking system (hand brake);
– Emergency stopping system (brakes);
– Tires;
– Horn;
– Steering mechanism;
– Coupling devices;
– Seat belts;
– Operating controls;

AND

– Safety devices.

• These requirements also apply where such equipment is necessary.

– Lights;
– Reflectors;
– Windshield wipers;
– Defrosters;
– Fire extinguishers;
– Steps and handholds for vehicle access;

AND

– Any other necessary equipment.

• All defects must be corrected before the vehicle is placed in service.

[Statutory Authority: RCW 49.17.010, 49.17.040, 49.17.050, 49.17.060. 04-24-089, § 296-155-610, filed 12/1/04, effective 1/1/05. Statutory Authority: RCW 49.17.040 and 49.17.050. 86-03-074 (Order 86-14), § 296-155-610, filed 1/21/86; Order 74-26, § 296-155-610, filed 5/7/74, effective 6/6/74.]

WAC 296-155-615 Material handling equipment. (1) General requirements for earthmoving equipment.

(a) Scope.

These rules apply to the earthmoving equipment. Some examples of earthmoving equipment are:

• Scrapers;
• Loaders;
• Crawler or wheel tractors;
• Bulldozers;
• Off-highway trucks;
• Graders;
• Agricultural and industrial tractors;

AND

• Similar equipment.

(b) Seat belts.

• Seat belts must be provided and used by all operators and passengers on all equipment covered by this section.

• Seat belts must meet the requirements of the Society of Automotive Engineers, J386-1969, Seat Belts for Construction Equipment.

• Seat belts for agricultural and light industrial tractors must meet the seat belt requirements of Society of Automotive Engineers J333a-1970, Operator Protection for Agricultural and Light Industrial Tractors.

Exemption: Seat belts are not required for equipment designed only for standup operation.

• Seat belts must not be used on equipment that does not have rollover protective structure (ROPS) or adequate canopy protection in place.

Exemption: Mechanics and persons in training may ride on the equipment without a seatbelt if one is not provided.

(c) Access roadways and grades.

• Equipment must not be operated on access roadway or grades unless they are constructed and/or maintained to allow for the safe operation of the equipment.

• Every emergency access ramp and berm used by an employer must be constructed to restrain and control runaway vehicles.

(d) Brakes.

Earthmoving equipment must have brakes capable of stopping and holding the equipment fully loaded.

• Equipment mentioned in (a) of this subsection, General requirements for earthmoving equipment, must have brakes meeting the specifications in Society of Automotive Engineers SAE-J237, Loader Dozer-197l, J236, Graders-1971, and J319b, Scrapers-1971.

• Brake systems for self-propelled rubber-tired off-highway equipment manufactured after January 1, 1972, must

meet the applicable minimum performance criteria set forth in the following Society of Automotive Engineers Recommended Practices:

Self-propelled scrapers	SAE J319b-1971
Self-propelled graders	SAE J236-1971
Truck and wagons	SAE J166-1971
Front-end loaders and dozers	SAE J237-1971

(e) Fenders.

• If pneumatic-tired earthmoving haulage equipment has a maximum speed that exceeds fifteen miles per hour, then the equipment must be equipped with fenders on all wheels to meet the requirements of Society of Automotive Engineers SAE J321a-1970, Fenders for Pneumatic-Tired Earthmoving Haulage Equipment.

• An employer may, at any time, seek to show under WAC 296-155-010, Variance and procedure, that the uncovered wheels present no hazard to personnel from flying materials.

Note: Examples of pneumatic-tired earthmoving haulage equipment may include:
• Trucks;
• Scrapers;
• Tractors;
AND
• Trailing units.

(f) Rollover protective structures (ROPS).

For requirements pertaining to rollover protective structures and overhead protection, see WAC 296-155-950 through 296-155-965.

(g) Audible alarms.

• All bidirectional machines must be equipped with a horn, distinguishable from the surrounding noise level. This horn must be:

– Operated as needed when the machine is moving in either direction;

AND

– Maintained in an operative condition.

Note: Examples of bidirectional machines include:
• Rollers;
• Compactors;
• Front-end loaders;
• Bulldozers;
AND
• Similar equipment.

• Employers must make sure that earthmoving or compacting equipment with an obstructed view to the rear in reverse is not operated unless:

– A reverse signal alarm distinguishable from the surrounding noise level is used;

OR

– An observer signals that it is safe to back up.

• If the surrounding noise level is of such amplitude that reverse signal alarms are not effective, then amber strobe lights must be used.

(h) Operators must look in the direction of travel.

The driver must look in the direction of, and keep a clear view of the path of travel, when operating equipment in reverse.

Exemption: See (g)(ii) of this subsection, Audible alarms, for requirements pertaining to equipment that has an obstructed view to the rear.

(i) Scissor points.

Scissor points on all front-end loaders, which constitute a hazard to the operator during normal operation, must be guarded.

(j) Tractors.

• Tractor motors must be cranked only by operators or other experienced persons.

• Waterproof and comfortable seat cushions must be provided on tractors at all times when working.

• Operator must not leave controls of tractor with master clutch engaged.

(k) Winch lines.

Winch lines must be maintained in good condition and provided with spliced eye, knob or hook in working end, except under conditions where unspliced end is required.

(l) Bulldozers and carry-all gates.

• Repairs on blade or dozer equipment must not be initiated unless the motor has been stopped and dozer blade is resting on the ground or securely blocked. The same applies to carry-all gates.

• Bulldozer blades and carry-all gates must rest on the ground or on blocking when machines are not in operation.

(m) Moving equipment.

Personnel must not get on or off machine while machine is in motion.

(n) Hazardous conditions.

Where excessive dust conditions are created, such areas must be sprinkled with water or an environmentally safe solution to keep dust at a minimum.

Reference: When dust presents a hazard, see chapter 296-841 WAC, Respiratory hazards for additional requirements.

(2) Excavating and other equipment.

(a) Tractors covered in subsection (1) of this section must have seat belts as required for the operators when seated in the normal seating arrangement for tractor operation.

(b) For the purposes of this part and of Part L of this chapter, the names and descriptions for measurement of dimensions of machinery and attachments must be as described in Society of Automotive Engineers 1970 Handbook, pages 1088 through 1103.

(c) The safety requirements, ratios, or limitations applicable to machines or attachment usage covered in Power Crane and Shovel Association's Standards No. 1 and No. 2 of 1968, and No. 3 of 1969, must be complied with, and must apply to cranes, machines, and attachments under this part.

(3) Lifting and hauling equipment (other than equipment covered under Part L of this chapter). Industrial trucks (including forklifts) shall meet the requirements of WAC 296-24-230, 296-155-605 and the following:

(a) Lift trucks, stackers, etc., shall have the rated capacity clearly posted on the vehicle so as to be clearly visible to the operator. When auxiliary removable counter-weights are provided by the manufacturer, corresponding alternate rated capacities also shall be clearly shown on the vehicle. These ratings shall not be exceeded.

(b) No modifications or additions which affect the capacity or safe operation of the equipment shall be made without the manufacturer's or professional engineer's written approval. If such modifications or changes are made, the capacity, operation, and maintenance instruction plates, tags, or decals, shall be changed accordingly. In no case shall the original safety factor of the equipment be reduced.

(c) If a load is lifted by two or more trucks working in unison, the proportion of the total load carried by any one truck shall not exceed its capacity.

(d) Steering or spinner knobs shall not be attached to the steering wheel unless the steering mechanism is of a type that prevents road reactions from causing the steering handwheel to spin. The steering knob shall be mounted within the periphery of the wheel.

(e) All high lift rider industrial trucks shall be equipped with overhead guards which meet the configuration and structural requirements as defined in paragraph 502 of American National Standards Institute B56.1-1975, Safety Standards for Powered Industrial Trucks.

(f) All industrial trucks in use shall meet the applicable requirements of design, construction, stability, inspection, testing, maintenance, and operation, as defined in American National Standards Institute B56.1-1975, Safety Standards for Powered Industrial Trucks.

(g) Unauthorized personnel shall not be permitted to ride on powered industrial trucks. A safe place to ride shall be provided where riding of trucks is authorized.

(h) When a forklift truck is used for elevating workers a platform shall be specifically built for that purpose and shall comply with the following requirements:

(i) The platform shall be securely attached to the forks and shall have standard guardrails and toeboards on all open sides.

(ii) The hydraulic system of the forklift shall be so designed that the lift mechanism will not drop faster than one hundred thirty-five feet per minute in the event of a failure in any part of the system. Forklifts used for elevating platforms shall be identified that they are so designed.

(iii) A safety strap shall be installed or the control lever shall be locked to prevent the boom from tilting.

(iv) An operator shall be at the controls of the forklift equipment while persons are on the platform.

(v) The operator shall be in the normal operating position while raising or lowering the platform.

(vi) The vehicle shall not travel from point to point while workers are on the platform except that inching or maneuvering at very slow speed is permissible.

(vii) The area between workers on the platform and the mast shall be adequately guarded to prevent contact with chains or other shear points.

(viii) All platforms shall be visually inspected daily or before each use by the person in charge of the work being performed, and shall be tested as frequently as is necessary to maintain minimum safety factors.

(ix) Whenever a truck, except for high lift order picker trucks, is equipped with vertical hoisting controls elevatable with the lifting carriage or forks, the following precautions shall be taken for the protection of personnel being elevated.

(A) Provide a platform secured to the lifting carriage and/or forks.

(B) Provide means whereby personnel on the platform can shut off power to the truck.

(C) Provide such protection from falling objects as indicated necessary by the operating conditions.

[Statutory Authority: RCW 49.17.010, 49.17.040, 49.17.050, 49.17.060. 04-24-089, § 296-155-615, filed 12/1/04, effective 1/1/05. Statutory Authority: RCW 49.17.010, [49.17].040 and [49.17].050. 00-01-176, § 296-155-615, filed 12/21/99, effective 3/1/00. Statutory Authority: RCW 49.17.010, [49.17].040, [49.17].050 and [49.17].060. 98-05-046, § 296-155-615, filed 2/13/98, effective 4/15/98. Statutory Authority: Chapter 49.17 RCW. 94-15-096 (Order 94-07), § 296-155-615, filed 7/20/94, effective 9/20/94. Statutory Authority: RCW 49.17.040 and 49.17.050. 86-03-074 (Order 86-14), § 296-155-615, filed 1/21/86; Order 74-26, § 296-155-615, filed 5/7/74, effective 6/6/74.]

WAC 296-155-620 Pile driving equipment. (1) General requirements.

(a) Boilers and piping systems which are a part of, or used with, pile driving equipment shall meet the applicable requirements of the American Society of Mechanical Engineers, Powers Boilers (section I).

(b) All pressure vessels which are a part of or used with, pile driving equipment shall meet the applicable requirements of the American Society of Mechanical Engineers, Pressure Vessels (section VIII).

(c) Overhead protection, which will not obscure the vision of the operator, and which meets the requirements of Part L of this chapter, shall be provided. Protection shall be of 2-inch planking or other solid material of equivalent strength.

(d) Stop blocks shall be provided for the leads to prevent the hammer from being raised against the head block.

(e) A blocking device, capable of safely supporting the weight of the hammer shall be provided for placement in the leads under the hammer at all times while employees are working under the hammer.

(f) Guards shall be provided across the top of the head block to prevent the cable from jumping out of the sheaves.

(g) When the leads must be inclined in the driving of batter piles, provisions shall be made to stabilize the leads.

(h) All working equipment shall be visually inspected at the beginning of each shift.

(i) Fixed leads shall be provided with ladder, and adequate rings, or similar attachment points, so that the loft workers may engage their full body harness lanyard to the leads. If the leads are provided with loft platform(s) such platform(s) shall be protected by standard guardrails.

(j) Pile drivers with swinging leads shall have a wire rope safety strap on top end.

(k) Spud bars shall be of hard wood with smooth round handle end for safe handling. Iron shod spud bars are prohibited.

(l) A follower block or driving cap shall be used with a drop hammer on all piling except sheet piling.

(m) Steam hose leading to a steam hammer or jet pipe shall be securely attached to the hammer with an adequate length of at least 1/4-inch diameter chain or cable to prevent whipping in the event the joint at the hammer is broken. Air hammer hoses shall be provided with the same protection as required for steam lines.

(n) Safety chains, or equivalent means, shall be provided for each hose connection to prevent the line from thrashing around in case the coupling becomes disconnected.

(o) Steam line controls shall consist of two shutoff valves, one of which shall be a quick-acting lever type within easy reach of the hammer operator.

(p) Guys, outriggers, thrustouts, or counterbalances shall be provided as necessary to maintain stability of pile driver rigs.

(q) Ladders constructed in compliance with this chapter shall be installed on all pile drivers from the hoist platform to the head block, and in such position that workers using ladders will not come in contact with lines, sheaves, etc.

(r) Drop hammers which have been chipped on the face shall not be used for pile driving.

(s) Groove worn drums or spools shall be replaced or properly repaired to present a smooth working surface.

(t) At least two full wraps of cable shall be maintained on hoisting drums.

(u) Proper racks shall be provided for storage of crosscut saws.

(v) Every hoisting drum used as a pile driver shall be equipped with manually operated dogs or pawls to hold suspended loads. Foot brakes shall only be used to hold suspended loads until drum dogs are engaged. The dogs shall be visible from the operator's station or be equipped with a positive direct connected telltale which shall be visible to the operator.

(w) No counterweight or spring arrangement on dogs shall be permitted which would allow dog to be automatically disengaged either by relieving the load or rolling the drum.

(x) In every crew there shall be designated signalperson. The driver operator or drum person shall receive signals from no others, except when loftworker is above. The hammer shall not be lowered except on the loftworker's signal.

(y) Spliced hammer lines shall not be used.

(2) Pile driving from barges and floats. Barges or floats supporting pile driving operations shall meet the applicable requirements of WAC 296-155-630.

(3) Pile driving equipment.

(a) Engineers and winchperson shall accept signals only from the designated signalperson.

(b) All employees shall be kept clear when piling is being hoisted into the leads.

(c) When piles are being driven in an excavated pit, the walls of the pit shall be sloped to the angle of repose or sheet-piled and braced.

(d) When steel tube piles are being "blown out," employees shall be kept well beyond the range of falling materials.

(e) When it is necessary to cut off the tops of driven piles, pile driving operations shall be suspended except where the cutting operations are located at least twice the length of the longest pile from the driver.

(f) When driving jacked piles, all access pits shall be provided with ladders and bulkheaded curbs to prevent material from falling into the pit.

(g) Floating equipment such as dredges and pile drivers shall maintain a signal system to shore in the event of an emergency.

(h) The distribution of machinery on floating equipment shall be such that the completed unit floats on an even keel.

(i) Fuel tanks below decks shall be vented to outside of hull and vents shall be equipped with flame arrestors.

(j) All hull compartments shall be ventilated. No person shall work in hull compartments until it is shown the compartments contain no flammable or toxic concentrations.

(k) Light fixtures installed or used within the hull shall be explosion proof.

(l) All floating rigs shall be equipped with ladderways extending from the deck to the waterline where the deck is more than 36 inches above the water. A wire rope shall be hung along both sides of the hull or float and so hung that it shall be at all times near or at the waterline.

(m) Doors of deck houses where deck house sets within 36" of edge of deck and doorways in hull shall be equipped with guard rails or cross chains.

(n) Deck houses shall have a substantial grab rail installed on all sides where such installation will not interfere with operations.

(o) Pile driver and dredge fairlead sheaves, and spudline sheaves shall be guarded to prevent workers or tools being drawn into them.

(p) All work deck shall be kept clear of debris, unnecessary tools and equipment in order to minimize the stumbling hazard. Lines shall be coiled, tools stored and material stacked clear of working spaces.

(q) Night operations shall be adequately lighted for all activity while work is in progress and shall be maintained until workers leave the work area.

(r) Electrical installation and equipment shall be installed and maintained in compliance with the National Electric Code.

(s) All walkways over water and on dredge pontoon discharge pipe lines shall be a minimum of 20" in width with standard handrail along one side on structures and gang planks. Walkways on pontoon lines may be equipped with hand lines in lieu of standard handrail.

(t) Adequate fire extinguishing equipment shall be provided and maintained in a serviceable condition.

(u) Protective equipment shall be used when working with creosote timbers. Protective creams shall be used on exposed skin surfaces and gloves and eye protection worn especially when driving piles.

(v) Pulling piles with hammer or pile line rigged through the head block is prohibited unless driver and rigging are designed to safely withstand the imposed strain.

(w) Truck runways and platforms shall be equipped with a wheel guard on all outside edges. Top of wheel guards shall be a minimum of 10 inches above deck.

(x) Use of foot blocks at base of leads for hammer line or pile line is prohibited.

[Statutory Authority: Chapter 49.17 RCW. 94-15-096 (Order 94-07), § 296-155-620, filed 7/20/94, effective 9/20/94; 91-03-044 (Order 90-18), § 296-155-620, filed 1/10/91, effective 2/12/91; Order 76-29, § 296-155-620, filed 9/30/76; Order 74-26, § 296-155-620, filed 5/7/74, effective 6/6/74.]

WAC 296-155-625 Site clearing. (1) General.

(a) The word "clearing" means the removal of trees, stumps, logs, brush, debris and rubbish from the surface of the ground in preparation of a site for construction work of any kind. The removal of trees and logs shall be in accordance with the requirements of chapter 296-54 WAC.

(b) All equipment and tools such as axes, sledges, wedges, saws, springboards, etc., shall be maintained in a safe condition and guarded with standard safeguards.

(c) Fallers shall give warning to brushing crews, buckers and other persons in the vicinity where a tree is being felled; taking notice that such persons are not only out of the reach of tree, but also out of danger of possible sidewinders, snags or other trees which may be knocked over by the tree being felled.

(d) Trees must not be felled toward and within range of a traveled road or operational railroad unless a flagger is used to stop all approaching persons, vehicles, or railroad equipment. Flaggers and flagging activities at the site must comply with the requirements of WAC 296-155-305.

(e) Clearing crews shall not be placed immediately below other crews working on hillsides where there is a possible danger of skidding or rolling trees, moving earth or rock.

(f) Pioneer roads on clearing operations shall be constructed to safely accommodate all equipment moved over road.

(g) Hazardous standing and down timber, rocks, etc., shall be moved from upper sides of cuts on side hill operations.

(h) Care shall be exercised in the use of oil for burning brush or timber.

(i) Employees engaged in site clearing shall be protected from hazards of irritant and toxic plants and suitably instructed in the first-aid treatment available.

(j) All equipment used in site clearing operations shall be equipped with rollover guards meeting the requirements of this chapter. In addition, rider-operated equipment shall be equipped with an overhead and rear canopy guard meeting the following requirements:

(i) The overhead covering on this canopy structure shall be of not less than 1/8-inch steel plate or 1/4-inch woven wire mesh with openings no greater than 1 inch, or equivalent.

(ii) The opening in the rear of the canopy structure shall be covered with not less than 1/4-inch woven wire mesh with openings no greater than 1 inch.

(iii) Use of 1/2 inch thick plastic sheets or other thicknesses of plastic panels derived from polycarbonate, acrylic, cellulose acetate butyrate which provides equivalent or better protection against particular hazards involved is acceptable in lieu of 1 or 1 3/4 inch open mesh material.

(A) All panels shall be installed in a manner which can withstand the initial impact, and maintain the protective barrier integrity; and

(B) All panels must be labeled or marked to distinguish between acceptable and inferior materials.

(k) In addition to observance of the general safety and health standards;

(i) The employer shall assume the responsibility of work assignment so that no worker shall be required to work in a position or location so isolated as to not be within ordinary calling distance of another person who can render assistance in case of emergency. In any operation where cutting, felling trees, loading, or a combination of these duties is carried on, there shall be a minimum crew of two persons who shall work as a team and shall be in visual or voice contact with one another. If one worker at these operations is required to be left alone for a period of time, the worker shall be contacted by another person at reasonable intervals not to exceed fifteen minutes unless such practice can be established to be impractical.

(ii) This does not apply to operators of motor vehicles, watchpersons or certain other jobs which, by their nature, are singular worker assignments. However, a definite procedure for checking the welfare of all workers during working hours shall be instituted and all workers so advised.

[Statutory Authority: RCW 49.17.010, [49.17].040, [49.17].050, 2000 c 239, and chapter 34.05 RCW. 01-04-015, § 296-155-625, filed 1/26/01, effective 2/28/01. Statutory Authority: Chapter 49.17 RCW. 94-15-096 (Order 94-07), § 296-155-625, filed 7/20/94, effective 9/20/94; 91-03-044 (Order 90-18), § 296-155-625, filed 1/10/91, effective 2/12/91. Statutory Authority: RCW 49.17.040 and 49.17.050. 86-03-074 (Order 86-14), § 296-155-625, filed 1/21/86; Order 74-26, § 296-155-625, filed 5/7/74, effective 6/6/74.]

WAC 296-155-630 Marine operations and equipment. (1) Material handling operations.

Operations fitting the definition of "material handling" shall be performed in conformance with applicable requirements of "Safety and health regulations for longshoring." The term "longshoring operations" means the loading, unloading, moving, or handling of construction materials, equipment and supplies, etc. into, in, on, or out of any vessel, from a fixed structure or shore-to-vessel, vessel-to-shore or fixed structure or vessel-to-vessel.

(2) Access to barges.

(a) Ramps for access of vehicles to or between barges shall be of adequate strength, provided with side boards, well maintained, and properly secured.

(b) Unless employees can step safely to or from the wharf, float, barge, or river towboat, either a ramp, meeting the requirements of (a) of this subsection, or a safe walkway, shall be provided.

(c) Jacob's ladders shall be of the double rung or flat tread type. They shall be well maintained and properly secured.

(d) A Jacob's ladder shall either hang without slack from its lashings or be pulled up entirely.

(e) When the upper end of the means of access rests on or is flush with the top of the bulwark, substantial steps, properly secured and equipped with at least one substantial hand rail approximately 33 inches in height, shall be provided between the top of the bulwark and the deck.

(f) Obstructions shall not be laid on or across the gangway.

(g) The means of access shall be adequately illuminated for its full length.

(h) Unless the structure makes it impossible, the means of access shall be so located that the load will not pass over employees.

(3) Working surfaces of barges.

(a) Employees shall not be permitted to walk along the sides of covered lighters or barges with coamings more than 5 feet high, unless there is a 3-foot clear walkway, or a grab rail, or a taut handline is provided.

(b) Decks and other working surfaces shall be maintained in a safe condition.

(c) Employees shall not be permitted to pass fore and aft, over, or around deckloads, unless there is a safe passage.

(d) Employees shall not be permitted to walk over deckloads from rail to coaming unless there is a safe passage. If it is necessary to stand at the outboard or inboard edge of the deckload where less than 24 inches of bulwark, rail, coaming, or other protection exists, all employees shall be provided with a suitable means of protection against falling from the deckload.

(4) First-aid and lifesaving equipment.

(a) Provisions for rendering first aid and medical assistance shall be in accordance with Part B of this Chapter.

(b) The employer shall ensure that there is in the vicinity of each barge in use at least one U.S. Coast Guard-approved 30-inch life ring with not less than 90 feet of line attached, and at least one portable or permanent ladder which will reach the top of the apron to the surface of the water. If the above equipment is not available at the pier, the employer shall furnish it during the time that the employer is working the barge.

(c) Employees walking or working on the unguarded decks of barges shall be protected with U.S. Coast Guard-approved personal flotation devices such as Type I PFD, Type II PFD, Type III PFD, or Type V PFD, or their equivalent, pursuant to 46 CFR 160 (Coast Guard Lifesaving Equipment Specifications) and 33 CFR 175.23 (Coast Guard table of devices equivalent to personal flotation devices). Ski belt or inflatable type personal flotation devices are specifically prohibited.

(5) Diving operations. (Reserved.)

[Statutory Authority: Chapter 49.17 RCW. 94-15-096 (Order 94-07), § 296-155-630, filed 7/20/94, effective 9/20/94; Order 76-29, § 296-155-630, filed 9/30/76; Order 74-26, § 296-155-630, filed 5/7/74, effective 6/6/74.]

PART N
EXCAVATION, TRENCHING, AND SHORING

WAC 296-155-650 Scope, application, and definitions applicable to this part. (1) Scope and application. This part applies to all open excavations made in the earth's surface. Excavations are defined to include trenches.

(2) Definitions applicable to this part.

(a) "Accepted engineering requirements or practices." Those requirements which are compatible with standards of practice required by a registered professional engineer.

(b) "Aluminum hydraulic shoring." A preengineered shoring system comprised of aluminum hydraulic cylinders (crossbraces) used in conjunction with vertical rails (uprights) or horizontal rails (walers). Such system is designed, specifically to support the sidewalls of an excavation and prevent cave-ins.

(c) "Bell-bottom pier hole." A type of shaft or footing excavation, the bottom of which is made larger than the cross section above to form a belled shape.

(d) "Benching (benching system)." A method of protecting employees from cave-ins by excavating the sides of an excavation to form one or a series of horizontal levels or steps, usually with vertical or near-vertical surfaces between levels.

(e) "Cave-in." The separation of a mass of soil or rock material from the side of an excavation, or loss of soil from under a trench shield or support system, and its sudden movement into the excavation in quantity that it could entrap, bury, injure, or immobilize a person.

(f) "Competent person." One who can identify existing or predictable hazards in the surroundings that are unsanitary, hazardous, or dangerous to employees. Also has authorization or authority by the nature of their position to take prompt corrective measures to eliminate them. The person shall be knowledgeable in the requirements of this part.

(g) "Cross braces." The horizontal members of a shoring system installed perpendicular to the sides of the excavation, the ends of which bear against either uprights or wales.

(h) "Excavation." Any person-made cut, cavity, trench, or depression in the earth's surface, formed by earth removal.

(i) "Faces or sides." The vertical or inclined earth surfaces formed as a result of excavation work.

(j) "Failure." The breakage, displacement, or permanent deformation of a structural member or connection so as to reduce its structural integrity and its supportive capabilities.

(k) "Hazardous atmosphere." A atmosphere which by reason of being explosive, flammable, poisonous, corrosive, oxidizing, irritating, oxygen deficient, toxic, or otherwise harmful, may cause death, illness, or injury.

(l) "Kickouts." Accidental release or failure of a cross brace.

(m) "Protective system." A method of protecting employees from cave-ins, from material that could fall or roll from an excavation face or into an excavation, or from the collapse of adjacent structures. Protective systems include support systems, sloping and benching systems, shield systems, and other systems that provide the necessary protection.

(n) "Ramp." An inclined walking or working surface that is used to gain access to one point to another, and is constructed from earth or from structural materials such as steel or wood.

(o) "Registered professional engineer." A person who is registered as a professional engineer in the state of Washington. The registered professional engineer shall comply with the Washington state department of licensing requirements, chapter 18.43 RCW.

(p) "Sheeting." The members of a shoring system that retain the earth in position and in turn are supported by other members of the shoring system.

(q) "Shield (shield system)." A structure that is able to withstand the forces imposed on it by a cave-in and thereby protect employees within the structure. Shields can be permanent structures or can be designed to be portable and moved along as work progresses. Additionally, shields can be either premanufactured or job-built in accordance with WAC 296-155-657 (3)(c) or (d). Shields used in trenches are usually referred to as "trench boxes" or "trench shields."

(r) "Shoring (shoring system)." A structure such as a metal hydraulic, mechanical, or timber shoring system that supports the sides of an excavation and which is designed to prevent cave-ins.

(s) "Sides." See "faces."

(t) "Sloping (sloping system)." A method of protecting employees from cave-ins by excavating to form sides of an excavation that are inclined away from the excavation so as to prevent cave-ins. The angle of incline required to prevent a cave-in varies with differences in such factors as the soil type, environmental conditions of exposure, and application of surcharge loads.

(u) "Stable rock." A natural solid mineral material that can be excavated with vertical sides and will remain intact while exposed. Unstable rock is considered to be stable when the rock material on the side or sides of the excavation is secured against caving-in or movement by rock bolts or by

another protective system that has been designed by a registered professional engineer.

(v) "Structural ramp." A ramp built of steel or wood, usually used for vehicle access. Ramps made of soil or rock are not considered structural ramps.

(w) "Support system." A structure such as underpinning, bracing or shoring, which provides support to an adjacent structure, underground installation, or the sides of an excavation.

(x) "Tabulated data." Tables and charts approved by a registered professional engineer and used to design and construct a protective system.

(y) "Trench (trench excavation)." A narrow excavation in relation to its length made below the surface of the ground. In general, the depth is greater than the width, but the width of a trench (measured at the bottom) is not greater than 15 feet (4.6m). If forms or other structures are installed or constructed in an excavation so as to reduce the dimension measured from the forms or structure to the side of the excavation to 15 feet (4.6 m) or less (measured at the bottom of the excavation), the excavation is also considered to be a trench.

(z) Trench box. See "shield."

(aa) "Trench shield." See "shield."

(bb) "Uprights." The vertical members of a trench shoring system placed in contact with the earth and usually positioned so that individual members do not contact each other. Uprights placed so that individual members are closely spaced, in contact with or interconnected to each other, are often called "sheeting."

(cc) "Wales." Horizontal members of a shoring system placed parallel to the excavation face whose sides bear against the vertical members of the shoring system or earth.

[Statutory Authority: Chapter 49.17 RCW. 94-15-096 (Order 94-07), § 296-155-650, filed 7/20/94, effective 9/20/94. Statutory Authority: Chapter 49.17 RCW and RCW 49.17.040, [49.17].050 and [49.17].060. 92-22-067 (Order 92-06), § 296-155-650, filed 10/30/92, effective 12/8/92. Statutory Authority: Chapter 49.17 RCW. 91-03-044 (Order 90-18), § 296-155-650, filed 1/10/91, effective 2/12/91. Statutory Authority: RCW 49.17.040 and 49.17.050. 86-03-074 (Order 86-14), § 296-155-650, filed 1/21/86. Statutory Authority: RCW 49.17.040, 49.17.050 and 49.17.240. 81-13-053 (Order 81-9), § 296-155-650, filed 6/17/81; Order 74-26, § 296-155-650, filed 5/7/74, effective 6/6/74.]

WAC 296-155-655 General protection requirements. (1) Surface encumbrances. All surface encumbrances that are located so as to create a hazard to employees shall be removed or supported, as necessary, to safeguard employees.

(2) Underground installations.

(a) The location of utility installations, such as sewer, telephone, fuel, electric, water lines, or any other underground installations that reasonably may be expected to be encountered during excavation work, shall be located prior to opening an excavation.

(b) Utility companies or owners shall be contacted within established or customary local response times, advised of the proposed work, and asked to locate the underground utility installation prior to the start of actual excavation.

(c) When excavation operations approach the location of underground installations, the exact location of the installations shall be determined by safe and acceptable means.

(d) While the excavation is open, underground installations shall be protected, supported, or removed as necessary to safeguard employees.

(3) Access and egress.

(a) Structural ramps.

(i) Structural ramps that are used solely by employees as a means of access or egress from excavations shall be designed by a competent person. Structural ramps used for access or egress of equipment shall be designed by a competent person qualified in structural design, and shall be constructed in accordance with the design.

(ii) Ramps and runways constructed of two or more structural members shall have the structural members connected together to prevent displacement.

(iii) Structural members used for ramps and runways shall be of uniform thickness.

(iv) Cleats or other appropriate means used to connect runway structural members shall be attached to the bottom of the runway or shall be attached in a manner to prevent tripping.

(v) Structural ramps used in lieu of steps shall be provided with cleats or other surface treatments on the top surface to prevent slipping.

(b) Means of egress from trench excavations. A stairway, ladder, ramp or other safe means of egress shall be located in trench excavations that are 4 feet (1.22 m) or more in depth so as to require no more than 25 feet (7.62 m) of lateral travel for employees.

(4) Exposure to vehicular traffic. Employees exposed to vehicular traffic must be provided with and must wear high-visibility garments meeting the requirements of WAC 296-155-200, General requirements for personal protective equipment (PPE).

(5) Exposure to falling loads. No employee shall be permitted underneath loads handled by lifting or digging equipment. Employees shall be required to stand away from any vehicle being loaded or unloaded to avoid being struck by any spillage or falling materials. Operators may remain in the cabs of vehicles being loaded or unloaded when the vehicles are equipped, in accordance with WAC 296-155-610 (2)(g), to provide adequate protection for the operator during loading and unloading operations.

(6) Warning system for mobile equipment. When mobile equipment is operated adjacent to an excavation, or when such equipment is required to approach the edge of an excavation, and the operator does not have a clear and direct view of the edge of the excavation, a warning system shall be utilized such as barricades, hand or mechanical signals, or stop logs. If possible, the grade should be away from the excavation.

(7) Hazardous atmospheres.

(a) Testing and controls. In addition to the requirements set forth in parts B-1, C, and C-1 of this chapter (296-155 WAC) to prevent exposure to harmful levels of atmospheric contaminants and to assure acceptable atmospheric conditions, the following requirements shall apply:

(i) Where oxygen deficiency (atmospheres containing less than 19.5 percent oxygen) or a hazardous atmosphere exists or could reasonably be expected to exist, such as in excavations in landfill areas or excavations in areas where hazardous substances are stored nearby, the atmospheres in

the excavation shall be tested before employees enter excavations greater than 4 feet (1.22 m) in depth.

(ii) Adequate precautions shall be taken to prevent employee exposure to atmospheres containing less than 19.5 percent oxygen and other hazardous atmospheres. These precautions include providing proper respiratory protection or ventilation in accordance with parts B-1 and C of this chapter respectively.

(iii) Adequate precaution shall be taken such as providing ventilation, to prevent employee exposure to an atmosphere containing a concentration of a flammable gas in excess of 10 percent of the lower flammable limit of the gas.

(iv) When controls are used that are intended to reduce the level of atmospheric contaminants to acceptable levels, testing shall be conducted as often as necessary to ensure that the atmosphere remains safe.

(b) Emergency rescue equipment.

(i) Emergency rescue equipment, such as breathing apparatus, a safety harness and line, or a basket stretcher, shall be readily available where hazardous atmospheric conditions exist or may reasonably be expected to develop during work in an excavation. This equipment shall be attended when in use.

(ii) Employees entering bell-bottom pier holes, or other similar deep and confined footing excavations, shall wear a harness with a lifeline securely attached to it. The lifeline shall be separate from any line used to handle materials, and shall be individually attended at all times while the employee wearing the lifeline is in the excavation.

Note: See chapter 296-62 WAC, Part M for additional requirements applicable to confined space operations.

(8) Protection from hazards associated with water accumulation.

(a) Employees shall not work in excavations in which there is accumulated water, or in excavations in which water is accumulating, unless adequate precautions have been taken to protect employees against the hazards posed by water accumulation. The precautions necessary to protect employees adequately vary with each situation, but could include special support or shield systems to protect from cave-ins, water removal to control the level of accumulating water, or use of a safety harness and lifeline.

(b) If water is controlled or prevented from accumulating by the use of water removal equipment, the water removal equipment and operations shall be monitored by a competent person to ensure proper operation.

(c) If excavation work interrupts the natural drainage of surface water (such as streams), diversion ditches, dikes, or other suitable means shall be used to prevent surface water from entering the excavation and to provide adequate drainage of the area adjacent to the excavation. Excavations subject to runoff from heavy rains will require an inspection by a competent person and compliance with subdivisions (a) and (b) of this subsection.

(9) Stability of adjacent structures.

(a) Where the stability of adjoining buildings, walls, or other structures is endangered by excavation operations, support systems such as shoring, bracing, or underpinning shall be provided to ensure the stability of such structures for the protection of employees.

(b) Excavation below the level of the base or footing of any foundation or retaining wall that could be reasonably expected to pose a hazard to employees shall not be permitted except when:

(i) A support system, such as underpinning, is provided to ensure the safety of employees and the stability of the structure; or

(ii) The excavation is in stable rock; or

(iii) A registered professional engineer has approved the determination that the structure is sufficiently removed from the excavation so as to be unaffected by the excavation activity; or

(iv) A registered professional engineer has approved the determination that such excavation work will not pose a hazard to employees.

(c) Sidewalks, pavements, and appurtenant structure shall not be undermined unless a support system or another method of protection is provided to protect employees from the possible collapse of such structures.

(10) Protection of employees from loose rock or soil.

(a) Adequate protection shall be provided to protect employees from loose rock or soil that could pose a hazard by falling or rolling from an excavation face. Such protection shall consist of scaling to remove loose material; installation of protective barricades at intervals as necessary on the face to stop and contain falling material; or other means that provide equivalent protection.

(b) Employees shall be protected from excavated or other materials or equipment that could pose a hazard by falling or rolling into excavations. Protection shall be provided by placing and keeping such materials or equipment at least 2 feet (.61 m) from the edge of excavations, or by the use of retaining devices that are sufficient to prevent materials or equipment from falling or rolling into excavations, or by a combination of both if necessary.

(11) Inspections.

(a) Daily inspections of excavations, the adjacent areas, and protective systems shall be made by a competent person for evidence of a situation that could result in possible cave-ins, indications of failure of protective systems, hazardous atmospheres, or other hazardous conditions. An inspection shall be conducted by the competent person prior to the start of work and as needed throughout the shift. Inspections shall also be made after every rainstorm or other hazard increasing occurrence. These inspections are only required when employee exposure can be reasonably anticipated.

(b) Where the competent person finds evidence of a situation that could result in a possible cave-in, indications of failure of protective systems, hazardous atmospheres, or other hazardous conditions, exposed employees shall be removed from the hazardous area until the necessary precautions have been taken to ensure their safety.

(12) Fall protection.

(a) Walkways shall be provided where employees or equipment are required or permitted to cross over excavations. Guardrails which comply with chapter 296-155 WAC, Part K shall be provided where walkways are 4 feet or more above lower levels.

(b) Adequate barrier physical protection shall be provided at all remotely located excavations. All wells, pits, shafts, etc., shall be barricaded or covered. Upon completion

of exploration and similar operations, temporary wells, pits, shafts, etc., shall be backfilled.

[Statutory Authority: RCW 49.17.010, 49.17.040, 49.17.050, 49.17.060. 04-24-089, § 296-155-655, filed 12/1/04, effective 1/1/05. Statutory Authority: RCW 49.17.010, [49.17].040 and [49.17].050. 99-17-094, § 296-155-655, filed 8/17/99, effective 12/1/99; 99-10-071, § 296-155-655, filed 5/4/99, effective 9/1/99. Statutory Authority: RCW 49.17.040, [49.17].050 and [49.17].060. 96-24-051, § 296-155-655, filed 11/27/96, effective 2/1/97. Statutory Authority: Chapter 49.17 RCW. 95-10-016, § 296-155-655, filed 4/25/95, effective 10/1/95. Statutory Authority: Chapter 49.17 RCW and RCW 49.17.040, [49.17].050 and [49.17].060. 92-22-067 (Order 92-06), § 296-155-655, filed 10/30/92, effective 12/8/92. Statutory Authority: Chapter 49.17 RCW. 91-03-044 (Order 90-18), § 296-155-655, filed 1/10/91, effective 2/12/91. Statutory Authority: RCW 49.17.040 and 49.17.050. 86-03-074 (Order 86-14), § 296-155-655, filed 1/21/86. Statutory Authority: RCW 49.17.040, 49.17.050 and 49.17.240. 81-13-053 (Order 81-9), § 296-155-655, filed 6/17/81; Order 76-29, § 296-155-655, filed 9/30/76; Order 74-26, § 296-155-655, filed 5/7/74, effective 6/6/74.]

WAC 296-155-657 Requirements for protective systems. (1) Protection of employees in excavations.

(a) Each employee in an excavation shall be protected from cave-ins by an adequate protective system designed in accordance with subsections (2) or (3) of this section except when:

(i) Excavations are made entirely in stable rock; or

(ii) Excavations are less than 4 feet (1.22m) in depth and examination of the ground by a competent person provides no indication of a potential cave-in.

(b) Protective systems shall have the capacity to resist without failure all loads that are intended or could reasonably be expected to be applied or transmitted to the system.

(2) Design of sloping and benching systems. The slopes and configurations of sloping and benching systems shall be selected and constructed by the employer or employer's designee and shall be in accordance with the requirements of subdivision (a); or, in the alternative, subdivision (b); or, in the alternative, subdivision (c); or, in the alternative, subdivision (d), as follows:

(a) Option 1—Allowable configurations and slopes.

(i) Excavations shall be sloped at an angle not steeper than one and one-half horizontal to one vertical (34 degrees measured from the horizontal), unless the employer uses one of the other options listed below.

(ii) Slopes specified in item (i) of this subdivision, shall be excavated to form configurations that are in accordance with the slopes shown for Type C soil in Appendix B to this part.

(b) Option 2—Determination of slopes and configurations using Appendices A and B. Maximum allowable slopes, and allowable configurations for sloping and benching systems, shall be determined in accordance with the conditions and requirements set forth in appendices A and B to this part.

(c) Option 3—Designs using other tabulated data.

(i) Designs of sloping or benching systems shall be selected from and be in accordance with tabulated data, such as tables and charts.

(ii) The tabulated data shall be in written form and shall include all of the following:

(A) Identification of the parameters that affect the selection of a sloping or benching system drawn from such data;

(B) Identification of the limits of use of the data, to include the magnitude and configuration of slopes determined to be safe;

(C) Explanatory information as may be necessary to aid the user in making a correct selection of a protective system from the data.

(iii) At least one copy of the tabulated data which identifies the registered professional engineer who approved the data, shall be maintained at the jobsite during construction of the protective system. After that time the data may be stored off the jobsite, but a copy of the data shall be made available to the director upon request.

(d) Option 4—Design by a registered professional engineer.

(i) Sloping and benching systems not utilizing Option 1 or Option 2 or Option 3 under subsection (2) of this section shall be approved by a registered professional engineer.

(ii) Designs shall be in written form and shall include at least the following:

(A) The magnitude of the slopes that were determined to be safe for the particular project;

(B) The configurations that were determined to be safe for the particular project; and

(C) The identity of the registered professional engineer approving the design.

(iii) At least one copy of the design shall be maintained at the jobsite while the slope is being constructed. After that time the design need not be at the jobsite, but a copy shall be made available to the director upon request.

(3) Design of support systems, shield systems, and other protective systems. Designs of support systems, shield systems, and other protective systems shall be selected and constructed by the employer or employer's designee and shall be in accordance with the requirements of subdivision (a); or, in the alternative, subdivision (b); or, in the alternative, subdivision (c); or, in the alternative, subdivision (d) as follows:

(a) Option 1—Designs using appendices A, C, and D. Designs for timber shoring in trenches shall be determined in accordance with the conditions and requirements set forth in appendices A and C to this part. Designs for aluminum hydraulic shoring shall be in accordance with subdivision (b) of this subsection, but if manufacturer's tabulated data cannot be utilized, designs shall be in accordance with appendix D.

(b) Option 2—Designs using manufacturer's tabulated data.

(i) Design of support systems, shield systems, or other protective systems that are drawn from manufacturer's tabulated data shall be in accordance with all specifications, recommendations, and limitations issued or made by the manufacturer.

(ii) Deviation from the specifications, recommendations, and limitations issued or made by the manufacturer shall only be allowed after the manufacturer issues specific written approval.

(iii) Manufacturer's specifications, recommendations, and limitations, and manufacturer's approval to deviate from the specifications, recommendations, and limitations shall be in written form at the jobsite during construction of the protective system. After that time this data may be stored off the jobsite, but a copy shall be made available to the director upon request.

(c) Option 3—Designs using other tabulated data.

(i) Designs of support systems, shield systems, or other protective systems shall be selected from and be in accordance with tabulated data, such as tables and charts.

(ii) The tabulated data shall be in written form and include all of the following:

(A) Identification of the parameters that affect the selection of a protective system drawn from such data;

(B) Identification of the limits of use of the data;

(C) Explanatory information as may be necessary to aid the user in making a correct selection of a protective system from the data.

(iii) At least one copy of the tabulated data, which identifies the registered professional engineer who approved the data, shall be maintained at the jobsite during construction of the protective system. After that time the data may be stored off the jobsite, but a copy of the data shall be made available to the director upon request.

(d) Option 4—Design by a registered professional engineer.

(i) Support systems, shield systems, and other protective systems not utilizing Option 1, Option 2 or Option 3, above, shall be approved by a registered professional engineer.

(ii) Designs shall be in written form and shall include the following:

(A) A plan indicating the sizes, types, and configurations of the materials to be used in the protective system; and

(B) The identity of the registered professional engineer approving the design.

(iii) At least one copy of the design shall be maintained at the jobsite during construction of the protective system. After that time, the design may be stored off the jobsite, but a copy of the design shall be made available to the director upon request.

(4) Materials and equipment.

(a) Materials and equipment used for protective systems shall be free from damage or defects that might impair their proper function.

(b) Manufactured materials and equipment used for protective systems shall be used and maintained in a manner that is consistent with the recommendations of the manufacturer, and in a manner that will prevent employee exposure to hazards.

(c) When material or equipment that is used for protective systems is damaged, a competent person shall examine the material or equipment and evaluate its suitability for continued use. If the competent person cannot assure the material or equipment is able to support the intended loads or is otherwise suitable for safe use, then such material or equipment shall be removed from service, and shall be evaluated and approved by a registered professional engineer before being returned to service.

(5) Installation and removal of support.

(a) General.

(i) Members of support systems shall be securely connected together to prevent sliding, falling, kickouts, or other predictable failure.

(ii) Support systems shall be installed and removed in a manner that protects employees from cave-ins, structural collapses, or from being struck by members of the support system.

(iii) Individual members of support systems shall not be subjected to loads exceeding those which those members were designed to withstand.

(iv) Before temporary removal of individual members begins, additional precautions shall be taken to ensure the safety of employees, such as installing other structural members to carry the loads imposed on the support system.

(v) Removal shall begin at, and progress from, the bottom of the excavation. Members shall be released slowly so as to note any indication of possible failure of the remaining members of the structure or possible cave-in of the sides of the excavation.

(vi) Backfilling shall progress together with the removal of support systems from excavations.

(b) Additional requirements for support systems for trench excavations.

(i) Excavation of material to a level no greater than 2 feet (.61 m) below the bottom of the members of a support system shall be permitted, but only if the system is designed to resist the forces calculated for the full depth of the trench, and there are no indications while the trench is open of a possible loss of soil from behind or below the bottom of the support system.

(ii) Installation of a support system shall be closely coordinated with the excavation of trenches.

(6) Sloping and benching systems. Employees shall not be permitted to work on the faces of sloped or benched excavations at levels above other employees except when employees at the lower levels are adequately protected from the hazard of falling, rolling, or sliding material or equipment.

(7) Shield systems.

(a) General.

(i) Shield systems shall not be subjected to loads exceeding those which the system was designed to withstand.

(ii) Shields shall be installed in a manner to restrict lateral or other hazardous movement of the shield in the event of the application of sudden lateral loads.

(iii) Employees shall be protected from the hazard of cave-ins when entering or exiting the areas protected by shields.

(iv) Employees shall not be allowed in shields when shields are being installed, removed, or moved vertically.

(b) Additional requirement for shield systems used in trench excavations. Excavations of earth material to a level not greater than 2 feet (.61 m) below the bottom of a shield shall be permitted, but only if the shield is designed to resist the forces calculated for the full depth of the trench, and there are no indications while the trench is open of a possible loss of soil from behind or below the bottom of the shield.

[Statutory Authority: Chapter 49.17 RCW and RCW 49.17.040, [49.17].050 and [49.17].060. 92-22-067 (Order 92-06), § 296-155-657, filed 10/30/92, effective 12/8/92. Statutory Authority: Chapter 49.17 RCW. 91-03-044 (Order 90-18), § 296-155-657, filed 1/10/91, effective 2/12/91.]

WAC 296-155-66103 Reserved.

[Statutory Authority: Chapter 49.17 RCW and RCW 49.17.040, [49.17].050 and [49.17].060. 92-22-067 (Order 92-06), § 296-155-66103, filed 10/30/92, effective 12/8/92. Statutory Authority: Chapter 49.17 RCW. 91-03-044 (Order 90-18), § 296-155-66103, filed 1/10/91, effective 2/12/91.]

WAC 296-155-66105 Reserved.

[Statutory Authority: Chapter 49.17 RCW and RCW 49.17.040, [49.17].050 and [49.17].060. 92-22-067 (Order 92-06), § 296-155-66105, filed 10/30/92, effective 12/8/92. Statutory Authority: Chapter 49.17 RCW. 91-03-044 (Order 90-18), § 296-155-66105, filed 1/10/91, effective 2/12/91.]

WAC 296-155-66109 Reserved.

[Statutory Authority: Chapter 49.17 RCW and RCW 49.17.040, [49.17].050 and [49.17].060. 92-22-067 (Order 92-06), § 296-155-66109, filed 10/30/92, effective 12/8/92. Statutory Authority: Chapter 49.17 RCW. 91-03-044 (Order 90-18), § 296-155-66109, filed 1/10/91, effective 2/12/91.]

WAC 296-155-664 Appendices.

[Statutory Authority: Chapter 49.17 RCW and RCW 49.17.040, [49.17].050 and [49.17].060. 92-22-067 (Order 92-06), § 296-155-664, filed 10/30/92, effective 12/8/92. Statutory Authority: Chapter 49.17 RCW. 91-03-044 (Order 90-18), § 296-155-664, filed 1/10/91, effective 2/12/91.]

WAC 296-155-66401 Appendix A—Soil classification. (1) Scope and application.

(a) Scope. This appendix describes a method of classifying soil and rock deposits based on site and environmental conditions, and on the structure and composition of the earth deposits. The appendix contains definitions, sets forth requirements, and describes acceptable visual and manual tests for use in classifying soils.

(b) Application. This appendix applies when a sloping or benching system is designed in accordance with the requirements set forth in WAC 296-155-657 (2)(b) as a method of protection for employees from cave-ins. This appendix also applies when timber shoring for excavations is designed as a method of protection from cave-ins in accordance with appendix C to part N of this chapter, and when aluminum hydraulic shoring is designed in accordance with appendix D. This Appendix also applies if other protective systems are designed and selected for use from data prepared in accordance with the requirements set forth in WAC 296-155-657(3), and the use of the data is predicated on the use of the soil classification system set forth in this appendix.

(2) Definitions. The definitions and examples given below are based on, in whole or in part, the following; American Society for Testing Materials (ASTM) Standards D653-85 and D2488; The Unified Soils Classification System, The U.S. Department of Agriculture (USDA) Textural Classification Scheme; and The National Bureau of Standards Report BSS-121.

(a) Cemented soil. A soil in which the particles are held together by a chemical agent, such as calcium carbonate such that a hand-size sample cannot be crushed into powder or individual soil particles by finger pressure.

(b) Cohesive soil. Clay (fine grained soil), or soil with a high clay content, which has cohesive strength. Cohesive soil does not crumble, can be excavated with vertical sideslopes, and is plastic when moist. Cohesive soil is hard to break up when dry, and exhibits significant cohesion when submerged. Cohesive soils include clayey silt, sandy clay, silty clay, clay and organic clay.

(c) Dry soil. Soil that does not exhibit visible signs of moisture content.

(d) Fissured. A soil material that has a tendency to break along definite planes of fracture with little resistance, or a material that exhibits open cracks, such as tension cracks, in an exposed surface.

(e) Granular soil. Gravel, sand, or silt, (coarse grained soil) with little or no clay content. Granular soil has no cohesive strength. Some moist granular soils exhibit apparent cohesion. Granular soil cannot be molded when moist and crumbles easily when dry.

(f) Layered system. Two or more distinctly different soil or rock types arranged in layers. Micaceous seams or weakened planes in rock or shale are considered layered.

(g) Moist soil. A condition in which a soil looks and feels damp. Moist cohesive soil can easily be shaped into a ball and rolled into small diameter threads before crumbling. Moist granular soil that contains some cohesive material will exhibit signs of cohesion between particles.

(h) Plastic. A property of a soil which allows the soil to be deformed or molded without cracking, or appreciable volume change.

(i) Saturated soil. A soil in which the voids are filled with water. Saturation does not require flow. Saturation, or near saturation, is necessary for the proper use of instruments such as a pocket penetrometer or sheer vane.

(j) Soil classification system. For the purpose of this part, a method of categorizing soil and rock deposits in a hierarchy of Stable Rock, Type A, Type B, and Type C, in decreasing order of stability. The categories are determined based on an analysis of the properties and performance characteristics of the deposits and the environmental conditions of exposure.

(k) Stable rock. Natural solid mineral matter that can be excavated with vertical sides and remain intact while exposed.

(l) Submerged soil. Soil which is underwater or is free seeping.

(m) Type A. Cohesive soils with an unconfined compressive strength of 1.5 ton per square foot (tsf) (144 kPa) or greater. Examples of cohesive soils are: Clay, silty clay, sandy clay, clay loam and, in some cases, silty clay loam and sandy clay loam. Cemented soils such as caliche and hardpan are also considered Type A. No soil is Type A if:

(i) The soil is fissured; or

(ii) The soil is subject to vibration from heavy traffic, pile driving, or similar effects; or

(iii) The soil has been previously disturbed; or

(iv) The soil is part of a sloped, layered system where the layers dip into the excavation on a slope of 4 horizontal to 1 vertical (4H.1V) or greater; or

(v) The material is subject to other factors that would require it to be classified as a less stable material.

(n) Type B.

(i) Cohesive soil with an unconfined compressive strength greater than 0.5 tsf (48 kPa) but less than 1.5 tsf (144 kPa): or

(ii) Granular cohesionless soils including: Angular gravel (similar to crushed rock), silt, silt loam, sandy loam and, in some cases, silty clay loam and sandy clay loam.

(iii) Previously disturbed soils except those which would otherwise be classed as Type C soil.

(iv) Soil that meets the unconfined compressive strength or cementation requirements for Type A, but is fissured or subject to vibration: or

(v) Dry rock that is not stable: or

(vi) Material that is part of a sloped, layered system where the layers dip into the excavation on a slope less steep than 4 horizontal to 1 vertical (4H.1V), but only if the material would otherwise be classified as Type B.

(o) Type C.

(i) Cohesive soil with an unconfined compressive strength of 0.5 tsf (48 kPa) or less: or

(ii) Granular soils including gravel, sand, and loamy sand: or

(iii) Submerged soil or soil from which water is freely seeping: or

(iv) Submerged rock that is not stable, or

(v) Material in a sloped, layered system where the layers dip into the excavation or a slope of 4 horizontal to 1 vertical (4H.1V) or steeper.

(p) Unconfined compressive strength. The load per unit area at which a soil will fail in compression. It can be determined by laboratory testing, or estimated in the field using a pocket penetrometer, by thumb penetration tests, and other methods.

(q) Wet soil. Soil that contains significantly more moisture than moist soil, but in such a range of values that cohesive material will slump or begin to flow when vibrated. Granular material that would exhibit cohesive properties when moist will lose those cohesive properties when wet.

(3) Requirements.

(a) Classification of soil and rock deposits. Each soil and rock deposit shall be classified by a competent person as Stable Rock, Type A, Type B, or Type C in accordance with the definitions set forth in subsection (2) of this section.

(b) Basis of classification. The classification of the deposits shall be made based on the results of at least one visual and at least one manual analysis. Such analyses shall be conducted by a competent person using tests in subsection (4) of this section or in other recognized methods of soil classification and testing such as those adopted by the American Society for Testing Materials, or the U.S. Department of Agriculture textural classification system.

(c) Visual and manual analyses. The visual and manual analyses, such as those noted as being acceptable in subsection (4) of this section, shall be designed and conducted to provide sufficient quantitative and qualitative information as may be necessary to identify properly the properties, factors, and conditions affecting the classification of the deposits.

(d) Layered systems. In a layered system, the system shall be classified in accordance with its weakest layer. However, each layer may be classified individually where a more stable layer lies under a less stable layer.

(e) Reclassification. If, after classifying a deposit, the properties, factors, or conditions affecting its classification change in any way, the changes shall be evaluated by a competent person. The deposit shall be reclassified as necessary to reflect the changed circumstances.

(4) Acceptable visual and manual tests.

(a) Visual tests. Visual analysis is conducted to determine qualitative information regarding the excavation site in general, the soil adjacent to the excavation, the soil forming the sides of the open excavation, and the soil taken as samples from excavated material.

(i) Observe samples of soil that are excavated and soil in the sides of the excavation. Estimate the range of particle sizes and the relative amounts of the particle sizes. Soil that is primarily composed of fine-grained material is cohesive material. Soil composed primarily of coarse-grained sand or gravel is granular material.

(ii) Observe soil as it is excavated. Soil that remains in clumps when excavated is cohesive. Soil that breaks up easily and does not stay in clumps is granular.

(iii) Observe the side of the opened excavation and the surface area adjacent to the excavation. Crack-like openings such as tension cracks could indicate fissured material. If chunks of soil spall off a vertical side, the soil could be fissured. Small spalls are evidence of moving ground and are indications of potentially hazardous situations.

(iv) Observe the area adjacent to the excavation and the excavation itself for evidence of existing utility and other underground structures, and to identify previously disturbed soil.

(v) Observe the opened side of the excavation to identify layered systems. Examine layered systems to identify if the layers slope toward the excavation. Estimate the degree of slope of the layers.

(vi) Observe the area adjacent to the excavation and sides of the open excavation for evidence of surface water, water seeping from the sides of the excavation, or the location of the level of the water table.

(vii) Observe the area adjacent to the excavation and the area within the excavation for sources of vibration that may affect the stability of the excavation face.

(b) Manual tests. Manual analysis of soil samples is conducted to determine quantitative as well as qualitative properties of soil and to provide more information in order to classify soil properly.

(i) Plasticity. Mold a moist or wet sample of soil into a ball and attempt to roll it into threads as thin as 1/8-inch in diameter. Cohesive material can be successfully rolled into threads without crumbling. For example, if at least a 2 inch (50 mm) length of 1/8-inch thread can be held on one end without tearing, the soil is cohesive.

(ii) Dry strength. If the soil is dry and crumbles on its own or with moderate pressure into individual grains or fine powder, it is granular (any combination of gravel, sand, or silt). If the soil is dry and falls into clumps which break up into smaller clumps, but the smaller clumps can only be broken up with difficulty, it may be clay in any combination with gravel, sand or silt. If the dry soil breaks into clumps which do not break up into small clumps and which can only be broken with difficulty, and there is no visual indication the soil is fissured, the soil may be considered unfissured.

(iii) Thumb penetration. The thumb penetration test can be used to estimate the unconfined compressive strength of cohesive soils. (This test is based on the thumb penetration test described in American Society for Testing and Materials (ASTM) Standard designation D2488-"Standard Recommended Practice for Description of Soils (Visual—Manual Procedure).") Type A soils with an unconfined compressive strength of 1.5 tsf can be readily indented by the thumb; however, they can be and penetrated by the thumb only with very great effort. Type C soils with an unconfined compressive strength of 0.5 tsf can be easily penetrated several inches by the thumb, and can be molded by light finger pressure. This test should be conducted on an undisturbed soil sample, such

as a large clump of spoil, as soon as practicable after excavation to keep to a minimum the effects of exposure to drying influences. If the excavation is later exposed to wetting influences (rain, flooding), the classification of the soil must be changed accordingly.

(iv) Other strength tests. Estimates of unconfined compressive strength of soils can also be obtained by use of a pocket penetrometer or by using a hand-operated shear vane.

(v) Drying test. The basic purpose of the drying test is to differentiate between cohesive material with fissures, unfissured cohesive material, and granular material. The procedure for the drying test involves drying a sample of soil that is approximately 1 inch thick (2.54 cm) and 6 inches (15.24 cm) in diameter until it is thoroughly dry:

(A) If the sample develops cracks as it dries, significant fissures are indicated.

(B) Samples that dry without cracking are to be broken by hand. If considerable force is necessary to break a sample, the soil has significant cohesive material content. The soil can be classified as a unfissured cohesive material and the unconfined compressive strength should be determined.

(C) If a sample breaks easily by hand, it is either a fissured cohesive material or a granular material. To distinguish between the two, pulverize the dried clumps of the sample by hand or by stepping on them. If the clumps do not pulverize easily, the material is cohesive with fissures. If they pulverize easily into very small fragments, the material is granular.

[Statutory Authority: Chapter 49.17 RCW and RCW 49.17.040, [49.17].050 and [49.17].060. 92-22-067 (Order 92-06), § 296-155-66401, filed 10/30/92, effective 12/8/92.]

WAC 296-155-66403 Appendix B—Sloping and benching. (1) Scope and application. This appendix contains specifications for sloping and benching when used as methods of protecting employees working in excavations from cave-ins. The requirements of this appendix apply when the design of sloping and benching protective systems is to be performed in accordance with the requirements set forth in WAC 296-155-657 (2)(b).

(2) Definitions.

(a) Actual slope. The slope to which an excavation face is excavated.

(b) Distress. Soil that is in a condition where a cave-in is imminent or is likely to occur. Distress is evidenced by such phenomena as the development of fissures in the face of or adjacent to an open excavation; the subsidence of the edge of an excavation; the slumping of material from the face or the bulging or heaving of material from the bottom of an excavation; the spalling of material from the face of an excavation; and ravelling, i.e., small amounts of material such as pebbles or little clumps of material suddenly separating from the face of an excavation and trickling or rolling down into the excavation.

(c) Maximum allowable slope. The steepest incline of an excavation face that is acceptable for the most favorable site conditions as protection against cave-ins, and is expressed as the ratio of horizontal distance to vertical rise (H:V).

(3) Requirements.

(a) Soil classification. Soil and rock deposits shall be classified in accordance with appendix A of this Part.

(b) Maximum allowable slope. The maximum allowable slope for a soil or rock deposit shall be determined from Table N-1 of this appendix.

(c) Actual slope.

(i) The actual slope shall not be steeper than the maximum allowable slope.

(ii) The actual slope shall be less steep than the maximum allowable slope, when there are signs of distress. If that situation occurs, the slope shall be cut back to an actual slope which is at least 1/2 horizontal to one vertical (1/2H:1V) less steep than the maximum allowable slope.

(iii) When surcharge loads from stored material or equipment, operating equipment, or traffic are present, a competent person shall determine the degree to which the actual slope must be reduced below the maximum allowable slope, and shall assure that such reduction is achieved. Surcharge loads from adjacent structures shall be evaluated in accordance with WAC 296-155-655(9).

(d) Configurations. Configurations of sloping and benching systems shall be in accordance with Figures N-1 through N-18.

TABLE N-1
MAXIMUM ALLOWABLE SLOPES

SOIL OR ROCK TYPE	MAXIMUM ALLOWABLE SLOPES (H_1V) (1) FOR EXCAVATION LESS THAN 20 FEET DEEP (2)
STABLE ROCK	VERTICAL (90°)
TYPE A	3/4: 1 (53°)
TYPE B	1: 1 (45°)
TYPE C	1 1/2: 1 (34°)

Notes: (1) Numbers shown in parentheses next to maximum allowable slopes are angles expressed in degrees from the horizontal. Angles have been rounded off.
(2) Sloping or benching for excavations greater than 20 feet deep shall be designed by a registered professional engineer.

Figure N-1
Slope Configurations for Type A Soil

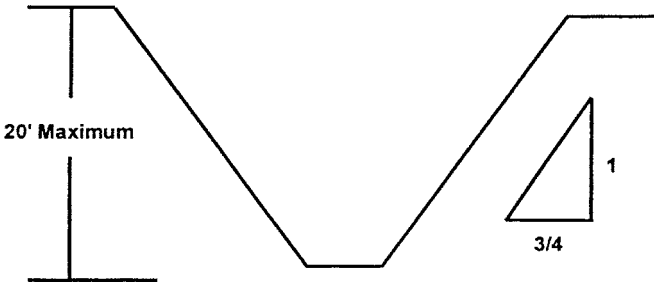

Simple Slope - General
All simple slope excavations 20 feet or less in depth shall have a maximum allowable slope of 3/4:1.

Figure N-2
Slope Configurations for Type A Soil

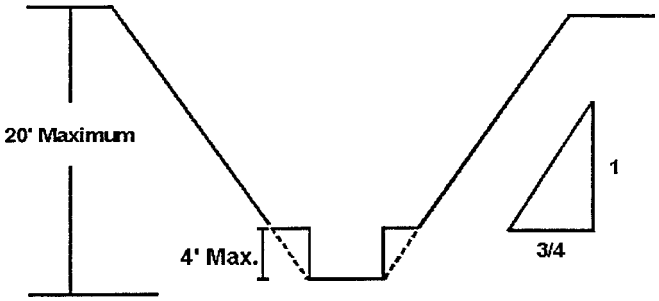

Simple Bench

All benched excavations 20 feet or less in depth shall have a maximum allowable slope of 3/4:1 and maximum bench dimensions of 4 feet.

Figure N-3
Slope Configurations for Type A Soil

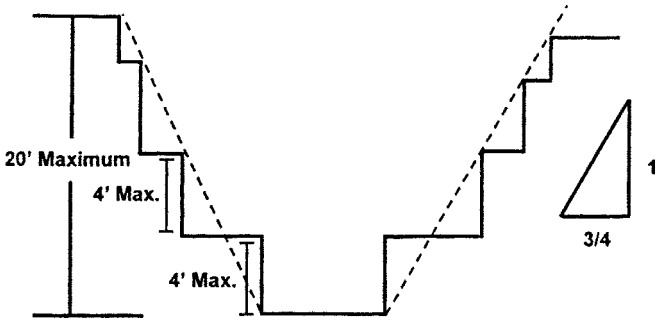

Multiple Bench

All benched excavations 20 feet or less in depth shall have a maximum allowable slope of 3/4:1 and maximum bench dimensions of 4 feet.

Figure N-4
Slope Configurations for Type A Soil

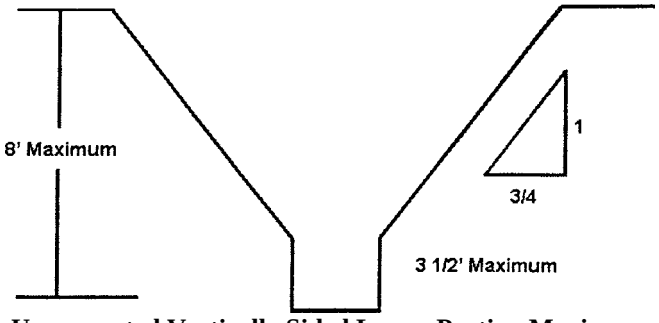

Unsupported Vertically Sided Lower Portion Maximum 8 Feet in Depth

All excavations 8 feet or less in depth which have unsupported vertically sided lower portions shall have a maximum vertical side of 3 1/2 feet.

Figure N-5
Slope Configurations for Type A Soil

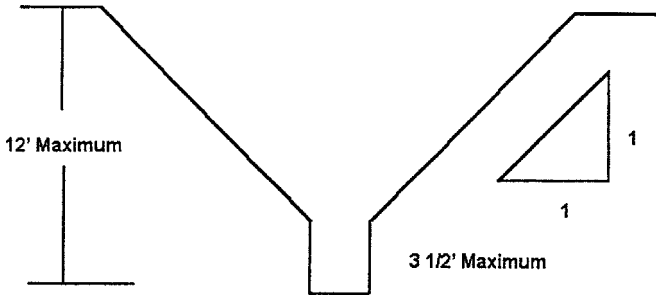

Unsupported Vertically Sided Lower Portion Maximum 12 Feet in Depth

All excavations more than 8 feet but not more than 12 feet in depth which have unsupported vertically sided lower portions shall have a maximum allowable slope of 1:1 and vertical side of 3 1/2 feet.

Figure N-6
Slope Configurations for Type A Soil
Support or Shield System

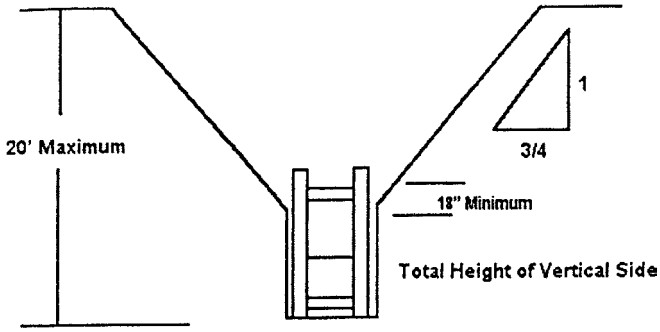

Unsupported Vertically Sided Lower Portion Maximum 20 Feet in Depth

All excavations 20 feet or less in depth which have vertically sided lower portions that are supported or shielded shall have a maximum allowable slope of 3/4:1. The support or shield system must extend at least 18 inches above the top of the vertical side. All other simple slope, compound slope and vertically sided lower portion excavations shall be in accordance with options permitted under WAC 296-155-657(2).

Figure N-7
Slope Configurations for Type B Soil

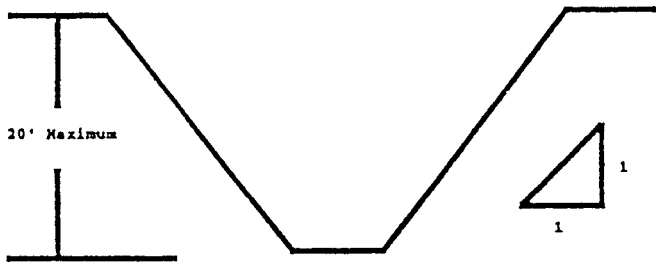

Simple Slope

All simple slope excavations 20 feet or less in depth shall have a maximum allowable slope of 1:1

Figure N-8
Slope Configurations for Type B Soil
This bench allowed in cohesive soil only.

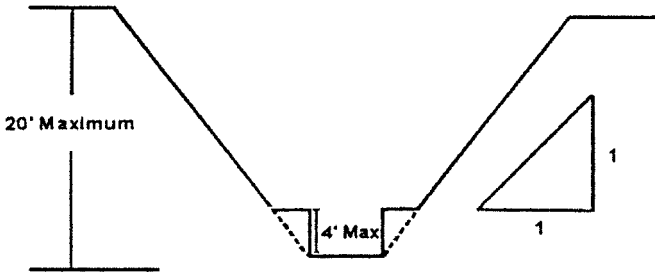

Single Bench
All excavations 20 feet or less in depth shall have a maximum allowable slope of 1:1 and maximum bench dimensions of 4 feet.

Figure N-9
Slope Configurations for Type B Soil
This bench allowed in cohesive soil only.

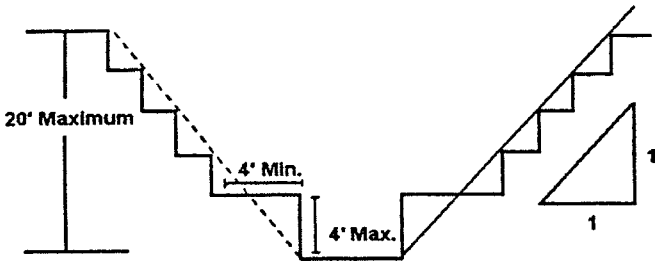

Multiple Bench
All excavations 20 feet or less in depth shall have a maximum allowable slope of 1:1 and maximum bench dimensions of 4 feet.

Figure N-10
Slope Configurations for Type B Soil
Support or Shield System

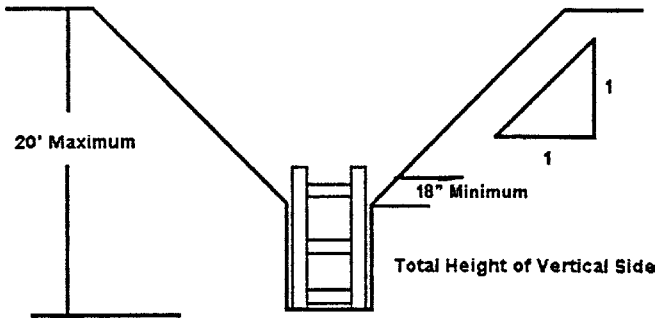

Vertically Sided Lower Portion
All excavations 20 feet or less in depth which have vertically sided lower portions shall be shielded or supported to a height at least 18 inches above the top of the vertical side. All such excavations shall have a maximum allowable slope of 1:1. All other simple slope, compound slope and vertically sided lower portion excavations shall be in accordance with options permitted under WAC 296-155-657(2).

Figure N-11
Slope Configurations for Type C Soil

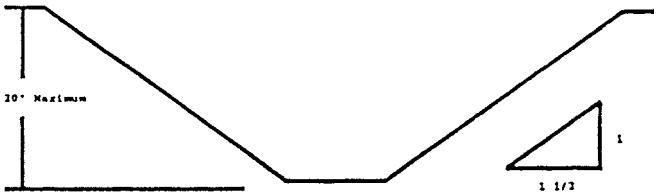

Simple Slope
All simple slope excavations 20 feet or less in depth shall have a maximum allowable slope of 1 1/2:1.

Figure N-12
Slope Configurations
for Type C Soil
Support or Shield System

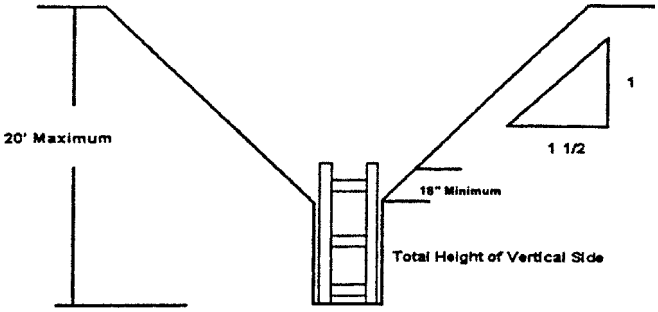

Vertically Sided Lower Portion
All excavations 20 feet or less in depth which have vertically sided lower portions shall be shielded or supported to a height at least 18 inches above the top of the vertical side. All such excavations shall have a maximum allowable slope of 1 1/2:1. All other simple slope, compound slope and vertically sided lower portion excavations shall be in accordance with options permitted under WAC 296-155-657(2).

Figure N-13
EXCAVATIONS MADE IN LAYERED SOILS
All excavations 20 feet or less in depth made in layered soils shall have a maximum allowable slope for each layer as set forth below.

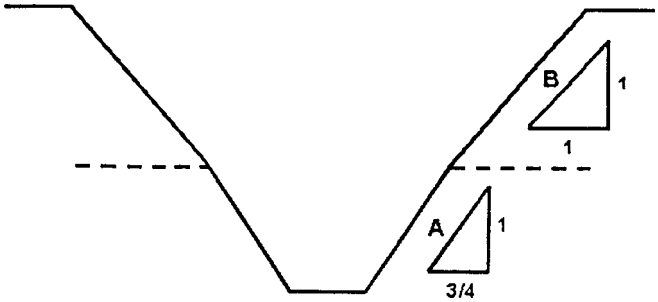

B OVER A

Figure N-14

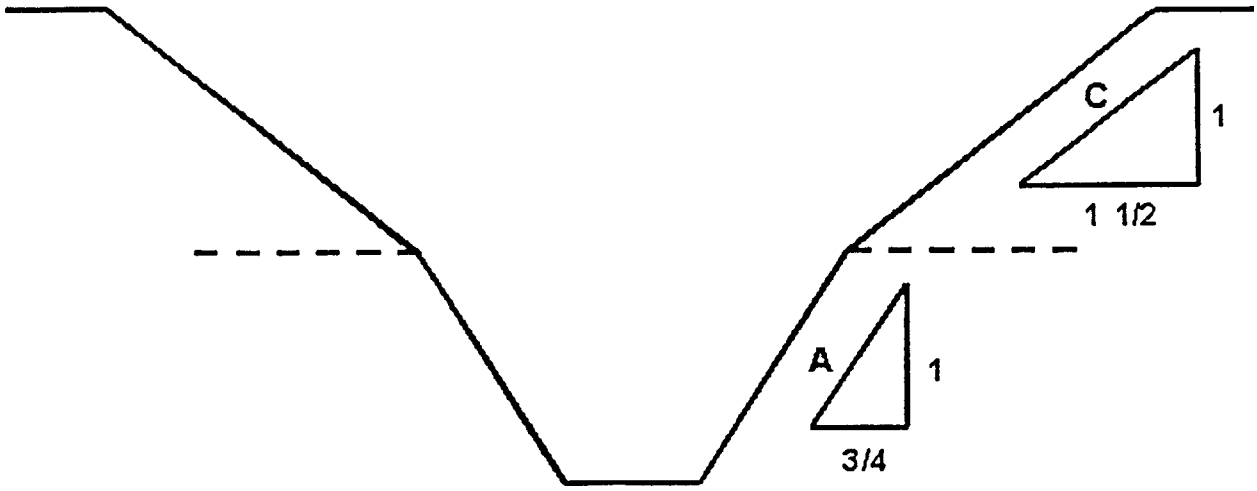

C OVER A

Figure N-15

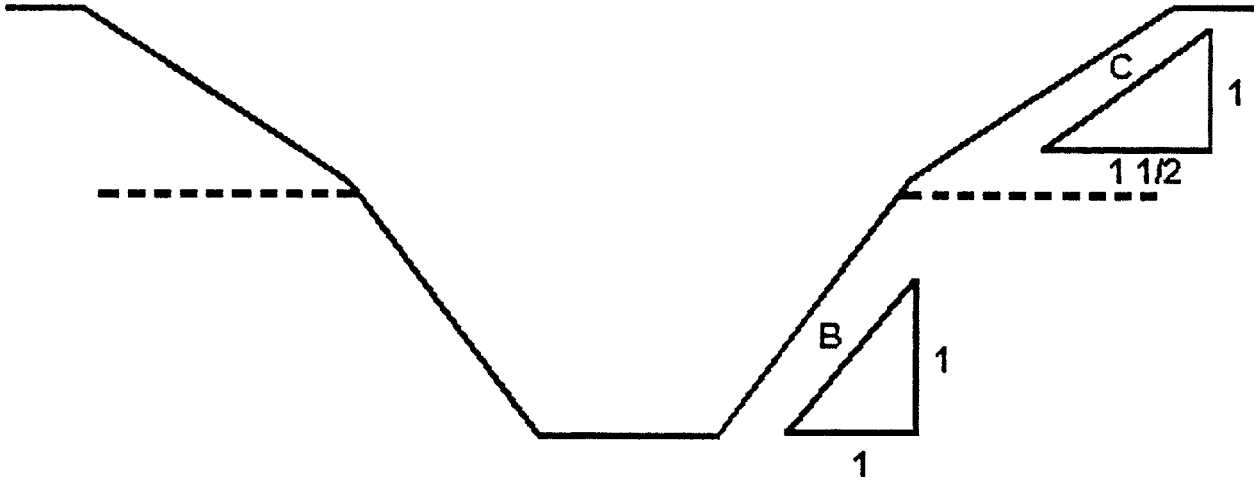

C OVER B

Figure N-16

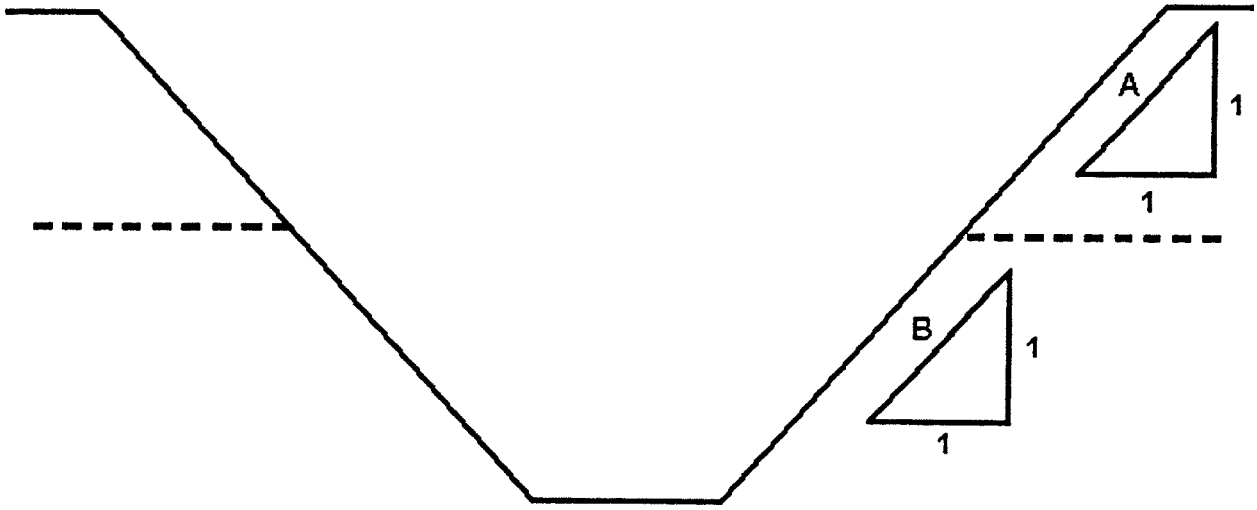

A OVER B

Figure N-17

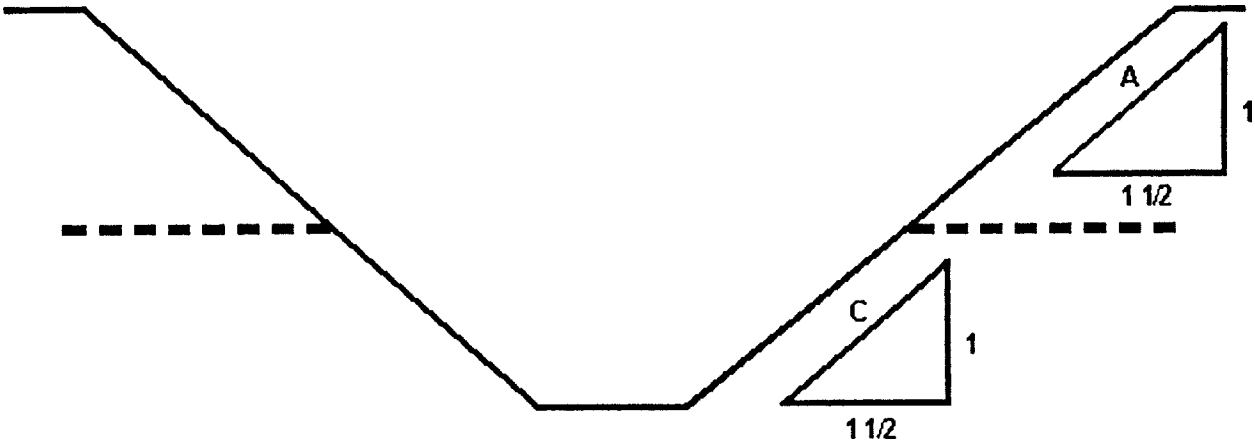

A OVER C

Figure N-18

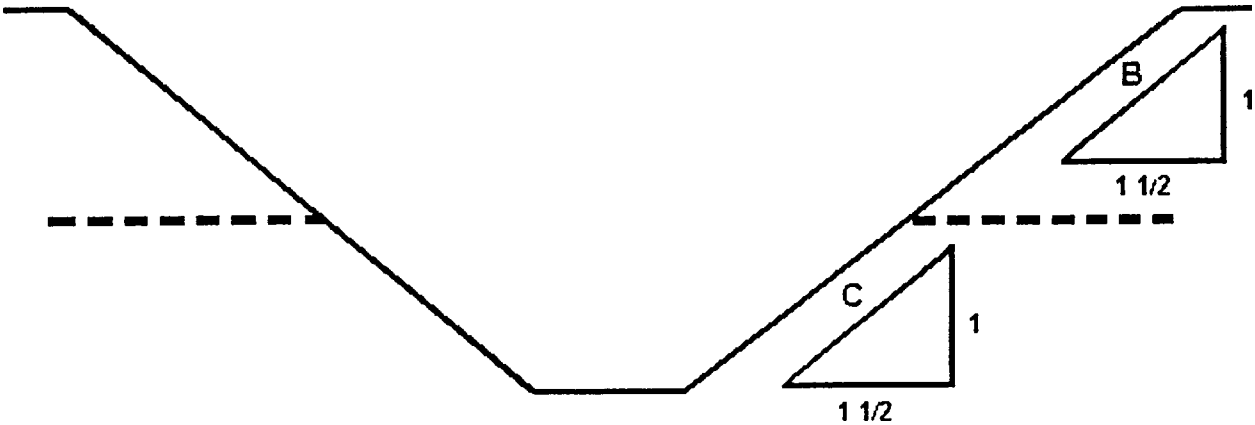

B OVER C

[Statutory Authority: RCW 49.17.010, [49.17].040 and [49.17].050. 99-17-094, § 296-155-66403, filed 8/17/99, effective 12/1/99. Statutory Authority: Chapter 49.17 RCW and RCW 49.17.040, [49.17].050 and [49.17].060. 92-22-067 (Order 92-06), § 296-155-66403, filed 10/30/92, effective 12/8/92.]

WAC 296-155-66405 Appendix C—Timber shoring for trenches. (1) Scope. This appendix contains information that can be used when timber shoring is provided as a method of protection from cave-ins in trenches that do not exceed 20 feet (6.1 m) in depth. This appendix must be used when design of timber shoring protective systems is to be performed in accordance with WAC 296-155-657 (3)(a). Other timber shoring configurations; other systems of support such as hydraulic and pneumatic systems; and other protective systems such as sloping, benching, shielding, and freezing systems must be designed in accordance with the requirements set forth in WAC 296-155-657 (2) and (3).

(2) Soil classification. In order to use the data presented in this appendix, the soil type or types in which the excavation is made must first be determined using the soil classification method set forth in appendix A of this part.

(3) Presentation of information. Information is presented in several forms as follows:

(a) Information is presented in tabular form in Tables N-2 through N-7 following subsection (7) of this appendix. Each table presents the minimum sizes of timber members to use in a shoring system, and each table contains data only for the particular soil type in which the excavation or portion of the excavation is made. The data are arranged to allow the user the flexibility to select from among several acceptable configurations of members based on varying the horizontal spacing of the crossbraces. Stable rock is exempt from shoring requirements and therefore, no data are presented for this condition.

(b) Information concerning the basis of the tabular data and the limitations of the data is presented in subsection (4) of this appendix, and on the tables themselves.

(c) Information explaining the use of the tabular data is presented in subsection (5) of this appendix.

(d) Information illustrating the use of the tabular data is presented in subsection (6) of this appendix.

(e) Miscellaneous notations regarding Tables N-2 through N-7 are presented in subsection (7) of this Appendix.

(4) Basis and limitations of the data.

(a) Dimensions of timber members.

(i) The sizes of the timber members listed in Tables N-2 through N-7 are taken from the National Bureau of Standards (NBS) report, "Recommended Technical Provisions for Construction Practice in Shoring and Sloping of Trenches and

Excavations." In addition, where NBS did not recommend specific sizes of members, member sizes are based on an analysis of the sizes required for use by existing codes and on empirical practice.

(ii) The required dimensions of the members listed in Tables N-2, N-3, and N-4 refer to actual dimensions and not nominal dimensions of the timber. Employers wanting to use nominal size shoring are directed to Tables N-5, N-6, and N-7, or have this choice under WAC 296-155-657 (3)(c), and are referred to The Corps of Engineers, The Bureau of Reclamation or data from other acceptable sources.

(b) Limitation of application.

(i) It is not intended that the timber shoring specification apply to every situation that may be experienced in the field. These data were developed to apply to the situations that are most commonly experienced in current trenching practice. Shoring systems for use in situations that are not covered by the data in this appendix must be designed as specified in WAC 296-155-657(3).

(ii) When any of the following conditions are present, the members specified in the tables are not considered adequate. Either an alternate timber shoring system must be designed or another type of protective system designed in accordance with WAC 296-155-657.

(A) When loads imposed by structures or by stored material adjacent to the trench weigh in excess of the load imposed by a two-foot soil surcharge. The term "adjacent" as used here means the area within a horizontal distance from the edge of the trench equal to the depth of the trench.

(B) When vertical loads imposed on cross braces exceed a 240-pound gravity load distributed on a one-foot section of the center of the crossbrace.

(C) When surcharge loads are present from equipment weighing in excess of 20,000 pounds.

(D) When only the lower portion of a trench is shored and the remaining portion of the trench is sloped or benched unless: The sloped portion is sloped at an angle less steep than three horizontal to one vertical; or the members are selected from the tables for use at a depth which is determined from the top of the overall trench, and not from the toe of the sloped portion.

(5) Use of Tables. The members of the shoring system that are to be selected using this information are the cross braces, the uprights, and the wales, where wales are required. Minimum sizes of members are specified for use in different types of soil. There are six tables of information, two for each soil type. The soil type must first be determined in accordance with the soil classification system described in appendix A of this Part. Using the appropriate table, the selection of the size and spacing of the members is then made. The selection is based on the depth and width of the trench where the members are to be installed and, in most instances, the selection is also based on the horizontal spacing of the crossbraces. Instances where a choice of horizontal spacing of crossbracing is available, the horizontal spacing of the crossbraces must be chosen by the user before the size of any member can be determined. When the soil type, the width and depth of the trench, and the horizontal spacing of the crossbraces are known, the size and vertical spacing of the crossbraces, the size and vertical spacing of the wales, and the size and horizontal spacing of the uprights can be read from the appropriate table.

(6) Examples to illustrate the use of Tables N-2 through N-4.

(a) Example 1.

A trench dug in Type A soil is 13 feet deep and five feet wide.

From Table N-2, for acceptable arrangements of timber can be used.

Arrangement #1

Space 4x4 crossbraces at six feet horizontally and four feet vertically.

Wales are not required.

Space 3x8 uprights at six feet horizontally. This arrangement is commonly called "skip shoring."

Arrangement #2

Space 4x6 crossbraces at eight feet horizontally and four feet vertically.

Space 8x8 wales at four feet vertically.

Space 2x6 uprights at four feet horizontally.

Arrangement #3

Space 6x6 crossbraces at 10 feet horizontally and four feet vertically.

Space 8x10 wales at four feet vertically.

Space 2x6 uprights at five feet horizontally.

Arrangement #4

Space 6x6 crossbraces at 12 feet horizontally and four feet vertically.

Space 10x10 wales at four feet vertically.

Space 3x8 uprights at six feet horizontally.

(b) Example 2.

A trench dug in Type B soil in 13 feet deep and five feet wide.

From Table N-3 three acceptable arrangements of members are listed.

Arrangement #1

Space 6x6 crossbraces at six feet horizontally and five feet vertically.

Space 8x8 wales at five feet vertically.

Space 2x6 uprights at two feet horizontally.

Arrangement #2

Space 6x8 crossbraces at eight feet horizontally and five feet vertically.

Space 10x10 wales at five feet vertically.

Space 2x6 uprights at two feet horizontally.

Arrangement #3

Space 8x8 crossbraces at 10 feet horizontally and five feet vertically.

Space 10x12 wales at five feet vertically.

Space 2x6 uprights at two feet vertically.

(c) Example 3.

A trench dug Type C soil is 13 feet deep and five feet wide.

From Table N-4 two acceptable arrangements of members can be used.

Arrangement #1

Space 8x8 crossbraces at six feet horizontally and five feet vertically.

Space 10x12 wales at five feet vertically.

Position 2x6 uprights as closely together as possible.

If water must be retained use special tongue and groove uprights to form tight sheeting.

Arrangement #2

Space 8x10 crossbraces at eight feet horizontally and five feet vertically.

Space 12x12 wales at five feet vertically.

Position 2x6 uprights in a close sheeting configuration unless water pressure must be resisted. Tight sheeting must be used where water must be retained.

(d) Example 4.

A trench dug in Type C soil is 20 feet deep and 11 feet wide. The size and spacing of members for the section of trench that is over 15 feet in depth is determined using Table N-4. Only one arrangement of members is provided.

Space 8x10 crossbraces at six feet horizontally and five feet vertically.

Space 12x12 wales at five feet vertically.

Use 3x6 tight sheeting.

Use of Tables N-5, N-6, and N-7 would follow the same procedures.

(7) Notes for all tables.

(a) Member sizes at spacings other than indicated are to be determined as specified in WAC 296-155-657(3). "Design of Protective Systems."

(b) When conditions are saturated or submerged use Tight Sheeting. Tight Sheeting refers to the use of specially-edged timber planks (e.g., tongue and groove) at least three inches thick, steel sheet piling, or similar construction that when driven or placed in position provide a tight wall to resist the lateral pressure of water and to prevent the loss of backfill material. Close Sheeting refers to the placement of planks side-by-side allowing as little space as possible between them.

(c) All spacing indicated is measured center to center.

(d) Wales to be installed with greater dimension horizontal.

(e) If the vertical distance from the center of the lowest crossbrace to the bottom of the trench exceeds two and one-half feet, uprights shall be firmly embedded or a mudsill shall be used. Where uprights are embedded, the vertical distance from the center of the lowest crossbrace to the bottom of the trench shall not exceed 36 inches. When mudsills are used, the vertical distance shall not exceed 42 inches. Mudsills are wales that are installed at the toe of the trench side.

(f) Trench jacks may be used in lieu of or in combination with timber crossbraces.

(g) Placement of crossbraces. When the vertical spacing of crossbraces is four feet, place the top crossbrace no more than two feet below the top of the trench. When the vertical spacing of crossbraces is five feet, place the top crossbrace no more than 2.5 feet below the top of the trench.

TABLE N-2
TIMBER TRENCH SHORING — MINIMUM TIMBER REQUIREMENTS*
SOIL TYPE A P_a - 25 X H + 72 psf (2 ft. Surcharge)

DEPTH OF TRENCH (FEET)	SIZE (ACTUAL) AND SPACING OF MEMBERS **													
	CROSS BRACES							WALES		UPRIGHTS				
	HORIZ. SPACING (FEET)	WIDTH OF TRENCH (FEET)					VERT. SPACING (FEET)	SIZE (IN.)	VERT. SPACING (FEET)	MAXIMUM ALLOWABLE HORIZONTAL SPACING (FEET)				
		UP TO 4	UP TO 6	UP TO 9	UP TO 12	UP TO 15				CLOSE	4	5	6	8
4 TO 10	UP TO 6	4 X 4	4 X 4	4 X 6	6 X 6	6 X 6	4	Not Req'd	—				2 X 6	
	UP TO 8	4 X 4	4 X 4	4 X 6	6 X 6	6 X 6	4	Not Req'd	—					2 X 8
	UP TO 10	4 X 6	4 X 6	4 X 6	6 X 6	6 X 6	4	8 X 8	4			2 X 6		
	UP TO 12	4 X 6	4 X 6	6 X 6	6 X 6	6 X 6	4	8 X 8	4				2 X 6	
10 TO 15	UP TO 6	4 X 4	4 X 4	4 X 6	6 X 6	6 X 6	4	Not Req'd	—				3 X 8	
	UP TO 8	4 X 6	4 X 6	6 X 6	6 X 6	6 X 6	4	8 X 8	4		2 X 6			
	UP TO 10	6 X 6	6 X 5	6 X 6	6 X 8	6 X 8	4	8 X 10	4			2 X 6		
	UP TO 12	6 X 6	6 X 6	6 X 6	6 X 8	6 X 8	4	10 X 10	4				3 X 8	
15 TO 20	UP TO 6	6 X 6	6 X 6	6 X 6	6 X 8	6 X 8	4	6 X 8	4	3 X 6				
	UP TO 8	6 X 6	6 X 6	6 X 6	6 X 8	6 X 8	4	8 X 8	4	3 X 6				
	UP TO 10	8 X 8	8 X 8	8 X 8	8 X 8	8 X 10	4	8 X 10	4	3 X 6				
	UP TO 12	8 X 8	8 X 8	8 X 8	8 X 8	8 X 10	4	10 X 10	4	3 X 6				
OVER 20	SEE NOTE 1													

* Mixed oak or equivalent with a bending strength not less than 850 psi.

** Manufactured members of equivalent strength may be substituted for wood.

TABLE N-3
TIMBER TRENCH SHORING — MINIMUM TIMBER REQUIREMENTS*
SOIL TYPE B P_a - 45 X H + 72 psf (2 ft. Surcharge)

DEPTH OF TRENCH (FEET)	SIZE (ACTUAL) AND SPACING OF MEMBERS **													
	CROSS BRACES							WALES		UPRIGHTS				
	HORIZ. SPACING (FEET)	WIDTH OF TRENCH (FEET)					VERT. SPACING (FEET)	SIZE (IN.)	VERT. SPACING (FEET)	MAXIMUM ALLOWABLE HORIZONTAL SPACING (FEET)				
		UP TO 4	UP TO 6	UP TO 9	UP TO 12	UP TO 15				CLOSE	2	3		
4 TO 10	UP TO 6	4 X 6	4 X 6	6 X 6	6 X 6	6 X 6	5	6 X 8	5			2 X 6		
	UP TO 8	6 X 6	6 X 6	6 X 6	6 X 8	6 X 8	5	8 X 10	5			2 X 6		
	UP TO 10	6 X 6	6 X 6	6 X 6	6 X 8	6 X 8	5	10 X 10	5			2 X 6		
	See Note 1													
10 TO 15	UP TO 6	6 X 6	6 X 6	6 X 6	6 X 8	6 X 8	5	8 X 8	5		2 X 6			
	UP TO 8	6 X 8	6 X 8	6 X 8	8 X 8	8 X 8	5	10 X 10	5		2 X 6			
	UP TO 10	8 X 8	8 X 8	8 X 8	8 X 8	8 X 10	5	10 X 12	5		2 X 6			
	See Note 1													
15 TO 20	UP TO 6	6 X 8	6 X 8	6 X 8	8 X 8	8 X 8	5	8 X 10	5	3 X 6				
	UP TO 8	8 X 8	8 X 8	8 X 8	8 X 8	8 X 10	5	10 X 12	5	3 X 6				
	UP TO 10	8 X 10	8 X 10	8 X 10	8 X 10	10 X 10	5	12 X 12	5	3 X 6				
	See Note 1													
OVER 20	SEE NOTE 1													

* Mixed oak or equivalent with a bending strength not less than 850 psi.

** Manufactured members of equivalent strength may be substituted for wood.

TABLE N-4
TIMBER TRENCH SHORING — MINIMUM TIMBER REQUIREMENTS*
SOIL TYPE C P_a - 80 X H + 72 psf (2 ft. Surcharge)

DEPTH OF TRENCH (FEET)	SIZE (ACTUAL) AND SPACING OF MEMBERS **													
	CROSS BRACES							WALES		UPRIGHTS				
	HORIZ. SPACING (FEET)	WIDTH OF TRENCH (FEET)					VERT. SPACING (FEET)	SIZE (IN.)	VERT. SPACING (FEET)	MAXIMUM ALLOWABLE HORIZONTAL SPACING (FEET)				
		UP TO 4	UP TO 6	UP TO 9	UP TO 12	UP TO 15				CLOSE				
4 TO 10	UP TO 6	6 X 8	6 X 8	6 X 8	8 X 8	8 X 8	5	8 X 10	5	2 X 6				
	UP TO 8	8 X 8	8 X 8	8 X 8	8 X 8	8 X 10	5	10 X 12	5	2 X 6				
	UP TO 10	8 X 10	8 X 10	8 X 10	8 X 10	10 X 10	5	12 X 12	5	2 X 6				
	See Note 1													
10 TO 15	UP TO 6	8 X 8	8 X 8	8 X 8	8 X 8	8 X 10	5	10 X 12	5	2 X 6				
	UP TO 8	8 X 10	8 X 10	8 X 10	8 X 10	10 X 10	5	12 X 12	5	2 X 6				
	See Note 1													
	See Note 1													
15 TO 20	UP TO 6	8 X 10	8 X 10	8 X 10	8 X 10	10 X 10	5	12 X 12	5	3 X 6				
	See Note 1													
	See Note 1													
	See Note 1													
OVER 20	SEE NOTE 1													

* Mixed oak or equivalent with a bending strength not less than 850 psi.

** Manufactured members of equivalent strength may be substituted for wood.

TABLE N-5
TIMBER TRENCH SHORING — MINIMUM TIMBER REQUIREMENTS*
SOIL TYPE A P_a - 25 X H + 72 psf (2 ft. Surcharge)

DEPTH OF TRENCH (FEET)	SIZE (S4S) AND SPACING OF MEMBERS **													
	CROSS BRACES							WALES		UPRIGHTS				
	HORIZ. SPACING (FEET)	WIDTH OF TRENCH (FEET)					VERT. SPACING (FEET)	SIZE (IN.)	VERT. SPACING (FEET)	MAXIMUM ALLOWABLE HORIZONTAL SPACING (FEET)				
		UP TO 4	UP TO 6	UP TO 9	UP TO 12	UP TO 15				CLOSE	4	5	6	8
4 TO 10	UP TO 6	4 X 4	4 X 4	4 X 4	4 X 4	4 X 6	4	Not Req'd	Not Req'd				4 X 6	
	UP TO 8	4 X 4	4 X 4	4 X 4	4 X 6	4 X 6	4	Not Req'd	Not Req'd					4 X 8
	UP TO 10	4 X 6	4 X 6	4 X 6	6 X 6	6 X 6	4	8 X 8	4			4 X 6		
	UP TO 12	4 X 6	4 X 6	4 X 6	6 X 6	6 X 6	4	8 X 8	4				4 X 6	
10 TO 15	UP TO 6	4 X 4	4 X 4	4 X 4	6 X 6	6 X 6	4	Not Req'd	Not Req'd				4 X 10	
	UP TO 8	4 X 6	4 X 6	4 X 6	6 X 6	6 X 6	4	6 X 8	4		4 X 6			
	UP TO 10	6 X 6	6 X 6	6 X 6	6 X 6	6 X 6	4	8 X 8	4			4 X 8		
	UP TO 12	6 X 6	6 X 6	6 X 6	6 X 6	6 X 6	4	8 X 10	4		4 X 6		4 X 10	
15 TO 20	UP TO 6	6 X 6	6 X 6	6 X 6	6 X 6	6 X 6	4	6 X 8	4	3 X 6				
	UP TO 8	6 X 6	6 X 6	6 X 6	6 X 6	6 X 6	4	8 X 8	4	3 X 6	4 X 12			
	UP TO 10	6 X 6	6 X 6	6 X 6	6 X 6	6 X 8	4	8 X 10	4	3 X 6				
	UP TO 12	6 X 6	6 X 6	6 X 6	6 X 8	6 X 8	4	8 X 12	4	3 X 6	4 X 12			
OVER 20	SEE NOTE 1													

* Douglas fir or equivalent with a bending strength not less than 1500 psi.
** Manufactured members of equivalent strength may be substituted for wood.

TABLE N-6
TIMBER TRENCH SHORING — MINIMUM TIMBER REQUIREMENTS*
SOIL TYPE B P_a - 45 X H + 72 psf (2 ft. Surcharge)

DEPTH OF TRENCH (FEET)	SIZE (S4S) AND SPACING OF MEMBERS **													
	CROSS BRACES							WALES		UPRIGHTS				
	HORIZ. SPACING (FEET)	WIDTH OF TRENCH (FEET)					VERT. SPACING (FEET)	SIZE (IN.)	VERT. SPACING (FEET)	MAXIMUM ALLOWABLE HORIZONTAL SPACING (FEET)				
		UP TO 4	UP TO 6	UP TO 9	UP TO 12	UP TO 15				CLOSE	2	3	4	6
4 TO 10	UP TO 6	4 X 6	4 X 6	4 X 6	6 X 6	6 X 6	5	6 X 8	5			3 X 12 4 X 8		4 X 12
	UP TO 8	4 X 6	4 X 6	6 X 6	6 X 6	6 X 6	5	8 X 8	5		3 X 8		4 X 8	
	UP TO 10	4 X 6	4 X 6	6 X 6	6 X 6	6 X 8	5	8 X 10	5			4 X 8		
	See Note 1													
10 TO 15	UP TO 6	6 X 6	6 X 6	6 X 6	6 X 8	6 X 8	5	8 X 8	5	3 X 6	4 X 10			
	UP TO 8	6 X 6	6 X 8	6 X 8	8 X 8	8 X 8	5	10 X 10	5	3 X 6	4 X 10			
	UP TO 10	6 X 8	6 X 8	8 X 8	8 X 8	8 X 8	5	10 X 12	5	3 X 6	4 X 10			
	See Note 1													
15 TO 20	UP TO 6	6 X 8	6 X 8	6 X 8	6 X 8	8 X 8	5	8 X 10	5	4 X 6				
	UP TO 8	6 X 8	6 X 8	6 X 8	8 X 8	8 X 8	5	10 X 12	5	4 X 6				
	UP TO 10	8 X 8	8 X 8	8 X 8	8 X 8	8 X 8	5	12 X 12	5	4 X 6				
	See Note 1													
OVER 20	SEE NOTE 1													

* Douglas fir or equivalent with a bending strength not less than 1500 psi.
** Manufactured members of equivalent strength may be substituted for wood.

TABLE N-7
TIMBER TRENCH SHORING — MINIMUM TIMBER REQUIREMENTS*
SOIL TYPE C P_a - 80 X H + 72 psf (2 ft. Surcharge)

DEPTH OF TRENCH (FEET)	SIZE (S4S) AND SPACING OF MEMBERS **													
	CROSS BRACES							WALES		UPRIGHTS				
	HORIZ. SPACING (FEET)	WIDTH OF TRENCH (FEET)					VERT. SPACING (FEET)	SIZE (IN.)	VERT. SPACING (FEET)	MAXIMUM ALLOWABLE HORIZONTAL SPACING (FEET)				
		UP TO 4	UP TO 6	UP TO 9	UP TO 12	UP TO 15				CLOSE				
4 TO 10	UP TO 6	6 X 6	6 X 6	6 X 6	6 X 6	8 X 8	5	8 X 8	5	3 X 6				
	UP TO 8	6 X 6	6 X 6	6 X 6	8 X 8	8 X 8	5	10 X 10	5	3 X 6				
	UP TO 10	6 X 6	6 X 6	8 X 8	8 X 8	8 X 8	5	10 X 12	5	3 X 6				
	See Note 1													
10 TO 15	UP TO 6	6 X 8	6 X 8	6 X 8	8 X 8	8 X 8	5	10 X 10	5	4 X 6				
	UP TO 8	8 X 8	8 X 8	8 X 8	8 X 8	8 X 8	5	12 X 12	5	4 X 6				
	See Note 1													
	See Note 1													
15 TO 20	UP TO 6	8 X 8	8 X 8	8 X 8	8 X 10	8 X 10	5	10 X 12	5	4 X 6				
	See Note 1													
	See Note 1													
	See Note 1													
OVER 20	SEE NOTE 1													

* Douglas fir or equivalent with a bending strength not less than 1500 psi.

** Manufactured members of equivalent strength may be substituted for wood.

[Statutory Authority: RCW 49.17.010, [49.17].040, [49.17].050. 02-12-098, § 296-155-66405, filed 6/5/02, effective 8/1/02. Statutory Authority: Chapter 49.17 RCW and RCW 49.17.040, [49.17].050 and [49.17].060. 92-22-067 (Order 92-06), § 296-155-66405, filed 10/30/92, effective 12/8/92.]

WAC 296-155-66407 Appendix D—Aluminum hydraulic shoring for trenches. (1) Scope. This appendix contains information that can be used when aluminum hydraulic shoring is provided as a method of protection against cave-ins in trenches that do not exceed 20 feet (6.1m) in depth. This appendix must be used when design of the aluminum hydraulic protective system cannot be performed in accordance with WAC 296-155-657 (3)(b).

(2) Soil Classification. In order to use data presented in this appendix, the soil type or types in which the excavation is made must first be determined using the soil classification method set forth in appendix A of this Part.

(3) Presentation of information. Information is presented in several forms as follows:

(a) Information is presented in tabular form in Tables N-8 through N-11. Each table presents the maximum vertical and horizontal spacings that may be used with various aluminum member sizes and various hydraulic cylinder sizes. Each table contains data only for the particular soil type in which the excavation or portion of the excavation is made. Tables N-8 and N-9 are for vertical shores in Types A and B soil. Tables N-10 and N-11 are for horizontal waler systems in Types B and C soil.

(b) Information concerning the basis of the tabular data and the limitations of the data is presented in subsection (4) of this appendix.

(c) Information explaining the use of the tabular data is presented in subsection (5) of this appendix.

(d) Information illustrating the use of the tabular data is presented in subsection (6) of this appendix.

(e) Miscellaneous notations (footnotes) regarding Table N-8 through N-11 are presented in subsection (7) of this appendix.

(f) Figures, illustrating typical installations of hydraulic shoring, are included just prior to the Tables. The illustrations page is entitled "Aluminum Hydraulic Shoring: Typical Installations."

(4) Basis and limitations of the data.

(a) Vertical shore rails and horizontal wales are those that meet the Section Modulus requirements in Tables N-8 through N-10. Aluminum material is 6061-T6 or material of equivalent strength and properties.

(b) Hydraulic cylinders specifications.

(i) 2-inch cylinders shall be a minimum 2-inch inside diameter with a minimum safe working capacity of no less than 18,000 pounds axial compressive load at maximum extension. Maximum extension is to include full range of cylinder extensions as recommended by product manufacturer.

(ii) 3-inch cylinders shall be a minimum 3-inch inside diameter with a safe working capacity of not less than 30,000 pounds axial compressive load at extensions as recommended by product manufacturer.

(c) Limitation of application.

(i) It is not intended that the aluminum hydraulic specification apply to every situation that may be experienced in the field. These data were developed to apply to the situations that are most commonly experienced in current trenching practice. Shoring systems for use in situations that are not covered by the data in this appendix must be otherwise designed as specified in WAC 296-155-657(3).

(ii) When any of the following conditions are present; the members specified in the Tables are not considered adequate. In this case, an alternative aluminum hydraulic shoring system or other type of protective system must be designed in accordance with WAC 296-155-657.

(A) When vertical loads imposed on cross braces exceed a 100 Pound gravity load distributed on a one foot section of the center of the hydraulic cylinder.

(B) When surcharge loads are present from equipment weighing in excess of 20,000 pounds.

(C) When only the lower portion of a trench is shored and the remaining portion of the trench is sloped or benched unless: The slope portion is sloped at an angle less steep than three horizontal to one vertical; or the members are selected from the tables for use at a depth which is determined from the top of the overall trench, and not from the toe of the sloped portion.

(5) Use of Tables N-8 through N-11. The members of the shoring system that are to be selected using this information are the hydraulic cylinders, and either the vertical shores or the horizontal wales. When a waler system is used the vertical timber sheeting to be used is also selected from these tables. The Tables N-8 and N-9 for vertical shores are used in Type A and B soils that do not require sheeting. Type B soils that may require sheeting, and Type C soils that always require sheeting are found in the horizontal wale Tables N-10 and N-11. The soil type must first be determined in accordance with the soil classification system described in appendix A of this Part. Using the appropriate table, the selection of the size and spacing of the members is made. The selection is based on the depth and width of the trench where the members are to be installed. In these tables the vertical spacing is held constant at four feet on center. The tables show the maximum horizontal spacing of cylinders allowed for each size of wale in the waler system tables, and in the vertical shore tables, the hydraulic cylinder horizontal spacing is the same as the vertical shore spacing.

(6) Example to Illustrate the Use of the Tables:

(a) Example 1: A trench dug in Type A soil is 6 feet deep and 3 feet wide. From Table N-8: Find vertical shores and 2 inch diameter cylinders spaced 8 feet on center (o.c.) horizontally and 4 feet on center (o.c.) vertically. (See Figures N-23 & N-25 for typical installations.)

(b) Example 2: A trench is dug in Type B soil that does not require sheeting, 13 feet deep and 5 feet wide. From Table N-9: Find vertical shores and 2 inch diameter cylinders spaced 6.5 feet o.c. horizontally and 4 feet o.c. vertically. (See Figures N-23 & N-25 for typical installations.)

(c) A trench is dug in Type B soil that does not require sheeting, but does experience some minor raveling of the trench face. The trench is 16 feet deep and 9 feet wide. From Table N-9: Find vertical shores and 2 inch diameter cylinder (with special oversleeves as designated by subdivision (7)(b)) spaced 5.5 feet o.c. horizontally and 4 feet o.c. vertically, plywood (per subdivision (7)(g) to the N-8 through N-11 Tables) should be used behind the shores. (See Figures N-24 & N-25 for typical installations.)

(d) Example 4: A trench is dug in previously disturbed Type B soil, with characteristics of a Type C soil, and will require sheeting. The trench is 18 feet deep and 12 feet wide. 8 foot horizontal spacing between cylinders is desired for working space. From Table N-10: Find horizontal wale with a section modulus of 14.0 spaced at 4 feet o.c. vertically and 3 inch diameter cylinder spaced at 9 feet maximum o.c. horizontally, 3x12 timber sheeting is required at close spacing vertically. (See Figure N-26 for typical installation.)

(e) Example 5: A trench is dug in Type C soil, 9 feet deep and 4 feet wide. Horizontal cylinder spacing in excess of 6 feet is desired for working space. From Table N-11: Find horizontal wale with a section modulus of 7.0 and 2 inch diameter cylinders spaced at 6.5 feet o.c. horizontally. Or, find horizontal wale with a 14.0 section modulus and 3 inch diameter cylinder spaced at 10 feet o.c. horizontally. Both wales are spaced 4 feet o.c. vertically. 3x12 timber sheeting is required at close spacing vertically. (See Figure N-26 for typical installation.)

(7) Footnotes, and general notes, for Tables N-8 through N-11.

(a) For applications other than those listed in the tables, refer to WAC 296-155-657 (3)(b) for use of manufacturer's tabulated data. For trench depths in excess of 20 feet, refer to WAC 296-155-657 (3)(b) and (c).

(b) 2-inch diameter cylinders, at this width, shall have structural steel tube (3.5x3.5x0.1875) oversleeves, or structural oversleeves of manufacturer's specification, extending the full, collapsed length.

(c) Hydraulic cylinders capacities.

(i) 2-inch cylinders shall be a minimum 2-inch inside diameter with a safe working capacity of not less than 18,000 pounds axial compressive load at maximum extension. Maximum extension is to include full range of cylinder extensions as recommended by product manufacturer.

(ii) 3-inch cylinders shall be a minimum 3-inch inside diameter with a safe work capacity of not less than 30,000 pounds axial compressive load at maximum extension. Maximum extension is to include full range of cylinder extensions as recommended by product manufacturer.

(d) All spacing indicated is measured center to center.

(e) Vertical shoring rails shall have a minimum section modulus of 0.40 inch.

(f) When vertical shores are used, there must be a minimum of three shores spaced equally, horizontally, in a group.

(g) Plywood shall be 1.125 in. thick softwood or 0.75 inch thick, 14 ply, arctic white birch (Finland form).

Please note that plywood is not intended as a structural member, but only for prevention of local raveling (sloughing of the trench face) between shores.

(h) See appendix C for timber specifications.

(i) Wales are calculated for simple span conditions.

(j) See subsection (4) of this appendix, for basis and limitations of the data.

ALUMINUM HYDRAULIC SHORING
TYPICAL INSTALLATIONS

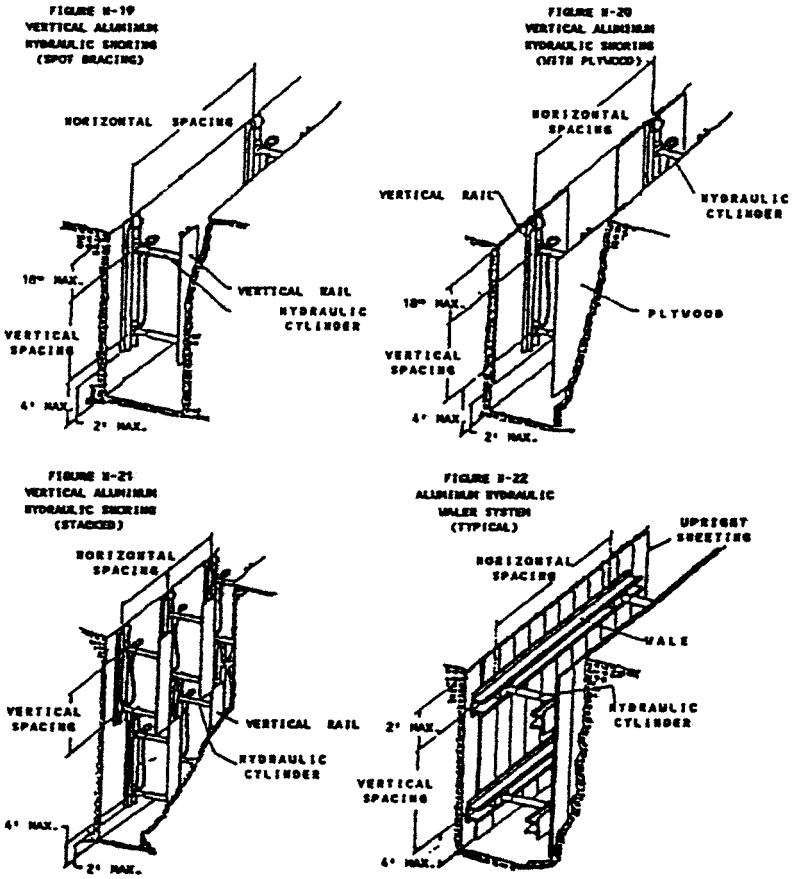

TABLE N-8
ALUMINUM HYDRAULIC SHORING
VERTICAL SHORES
FOR SOIL *TYPE A*

Depth of Trench (Feet)	Hydraulic Cylinders				
	Maximum Horizontal Spacing (Feet)	Maximum Vertical Spacing (Feet)	Width of Trench (Feet)		
			Up to 8	Over 8 Up to 12	Over 12 Up to 15
Over 4 Up to 10	8	4	2 INCH DIAMETER	2 INCH DIAMETER NOTE (2)	3 INCH DIAMETER
Over 10 Up to 15	8				
Over 15 Up to 20	7				
Over 20	NOTE (1)				

Footnotes to tables, and general notes on hydraulic shoring, are found in Appendix D, WAC 296-155-66407(7)
Note (1): See Appendix D, WAC 296-155-66407 (7)(a)
Note (2): See Appendix D, WAC 296-155-66407 (7)(b)

TABLE N-9
ALUMINUM HYDRAULIC SHORING
VERTICAL SHORES
FOR SOIL *TYPE B*

Depth of Trench (Feet)	Hydraulic Cylinders				
	Maximum Horizontal Spacing (Feet)	Maximum Vertical Spacing (Feet)	Width of Trench (Feet)		
			Up to 8	Over 8 Up to 12	Over 12 Up to 15
Over 4 Up to 10	8	4	2 INCH DIAMETER	2 INCH DIAMETER NOTE (2)	3 INCH DIAMETER
Over 10 Up to 15	6.5				
Over 15 Up to 20	5.5				
Over 20	NOTE (1)				

Footnotes to tables, and general notes on hydraulic shoring, are found in Appendix D, WAC 296-155-66407(7)
Note (1): See Appendix D, WAC 296-155-66407 (7)(a)
Note (2): See Appendix D, WAC 296-155-66407 (7)(b)

TABLE N-10
ALUMINUM HYDRAULIC SHORING
WALER SYSTEMS
FOR SOIL *TYPE B*

Depth of Trench (Feet)	Wales		Hydraulic Cylinders						Timber Uprights		
			Width of Trench (Feet)						Max. Horizontal Spacing (on Center)		
			Up to 8		Over 8 Up to 12		Over 12 Up to 15				
	Vertical Spacing (Feet)	Section* Modulus (In^3)	Horiz. Spacing	Cylinder Diameter	Horiz. Spacing	Cylinder Diameter	Horiz. Spacing	Cylinder Diameter	Solid Sheet	2 Feet	3 Feet
Over 4 Up to 10	4	3.5	8.0	2 IN	8.0	2 IN Note (2)	8.0	3 IN	—	—	3 X 12
		7.0	9.0	2 IN	9.0	2 IN Note (2)	9.0	3 IN			
		14.0	12.0	3 IN	12.0	3 IN	12.0	3 IN			
Over 10 Up to 15	4	3.5	6.0	2 IN	6.0	2 IN Note (2)	6.0	3 IN	—	3 X 12	—
		7.0	8.0	3 IN	8.0	3 IN	8.0	3 IN			
		14.0	10.0	3 IN	10.0	3 IN	10.0	3 IN			
Over 15 Up to 20	4	3.5	5.5	2 IN	5.5	2 IN Note (2)	5.5	3 IN	3 X 12	—	—
		7.0	6.0	3 IN	6.0	3 IN	6.0	3 IN			
		14.0	9.0	3 IN	9.0	3 IN	9.0	3 IN			
Over 20	NOTE (1)										

Footnotes to tables, and general notes on hydraulic shoring, are found in Appendix D, WAC 296-155-66407(7)
Note (1): See Appendix D, WAC 296-155-66407 (7)(a)
Note (2): See Appendix D, WAC 296-155-66407 (7)(b)
*Consult product manufacturer and/or qualified engineer for Section Modulus of available wales.

TABLE N-11
ALUMINUM HYDRAULIC SHORING
WALER SYSTEMS
FOR SOIL *TYPE C*

Depth of Trench (Feet)	Wales		Hydraulic Cylinders						Timber Uprights		
			Width of Trench (Feet)						Max. Horizontal Spacing (on Center)		
			Up to 8		Over 8 Up to 12		Over 12 Up to 15				
	Vertical Spacing (Feet)	Section* Modulus (In³)	Horiz. Spacing	Cylinder Diameter	Horiz. Spacing	Cylinder Diameter	Horiz. Spacing	Cylinder Diameter	Solid Sheet	2 Feet	3 Feet
Over 4 Up to 10	4	3.5	6.0	2 IN	6.0	2 IN Note (2)	6.0	3 IN	3 X 12	—	—
		7.0	6.5	2 IN	6.5	2 IN Note (2)	6.5	3 IN			
		14.0	10.0	3 IN	10.0	3 IN	10.0	3 IN			
Over 10 Up to 15	4	3.5	4.0	2 IN	4.0	2 IN Note (2)	4.0	3 IN	3 X 12	—	—
		7.0	5.5	3 IN	5.5	3 IN	5.5	3 IN			
		14.0	8.0	3 IN	8.0	3 IN	8.0	3 IN			
Over 15 Up to 20	4	3.5	3.5	2 IN	3.5	2 IN Note (2)	3.5	3 IN	3 X 12	—	—
		7.0	5.0	3 IN	5.0	3 IN	5.0	3 IN			
		14.0	6.0	3 IN	6.0	3 IN	6.0	3 IN			
Over 20	NOTE (1)										

Footnotes to tables, and general notes on hydraulic shoring, are found in Appendix D, WAC 296-155-66407(7)
Note (1): See Appendix D, WAC 296-155-66407 (7)(a)
Note (2): See Appendix D, WAC 296-155-66407 (7)(b)
*Consult product manufacturer and/or qualified engineer for Section Modulus of available wales.

[Statutory Authority: Chapter 49.17 RCW and RCW 49.17.040, [49.17].050 and [49.17].060. 92-22-067 (Order 92-06), § 296-155-66407, filed 10/30/92, effective 12/8/92.]

WAC 296-155-66409 Appendix E—Alternatives to timber shoring.

Appendix E to part N - Alternatives to Timber Shoring
Figure N-23, Aluminum Hydraulic Shoring

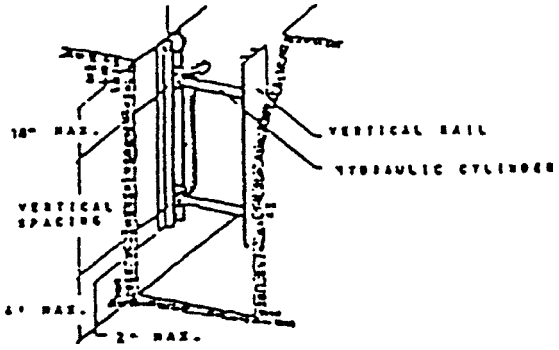

Figure N-24, Pneumatic/hydraulic Shoring

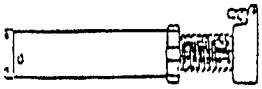

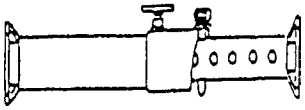

Figure N-25, Trench Jacks (Screw Jacks)

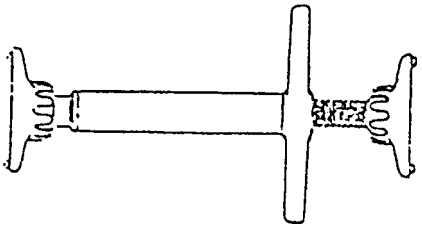

Figure N-26, Trench Shields

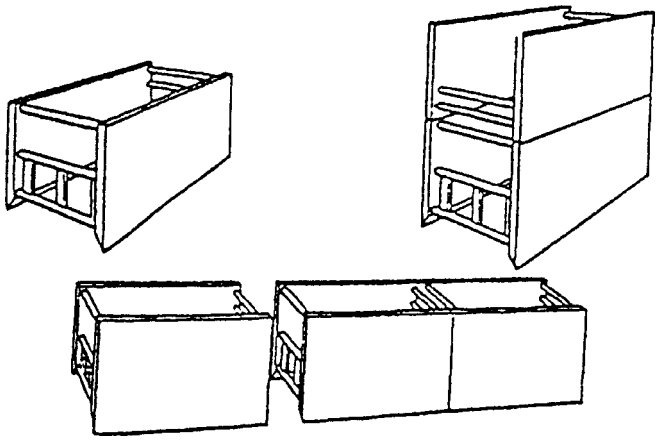

[Statutory Authority: Chapter 49.17 RCW and RCW 49.17.040, [49.17].050 and [49.17].060. 92-22-067 (Order 92-06), § 296-155-66409, filed 10/30/92, effective 12/8/92.]

WAC 296-155-66411 Appendix F—Selection of protective systems. The following figures are a graphic summary of the requirements contained in Part N for excavations 20 feet or less in depth. Protective systems for use in excavations more than 20 feet in depth must be designed by a registered professional engineer in accordance with WAC 296-155-657 (2) and (3).

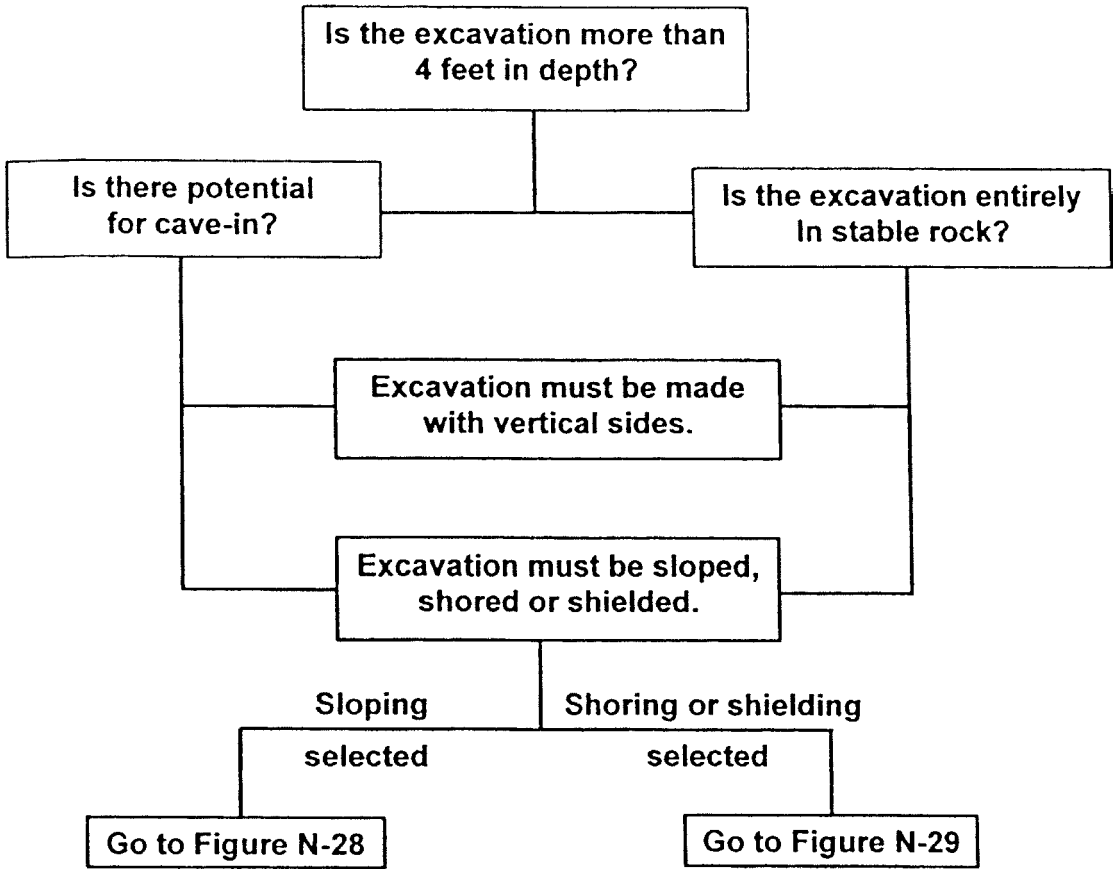

FIGURE N-27 - PRELIMINARY DECISIONS

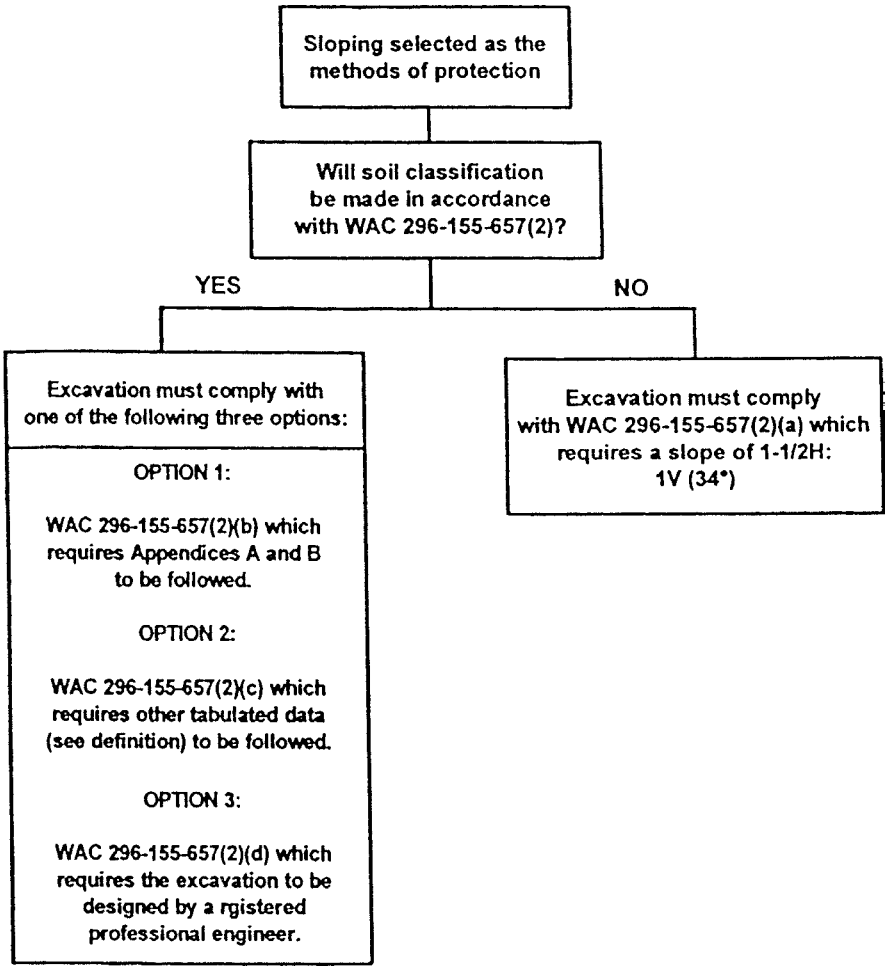

FIGURE N-28 - SLOPING OPTIONS

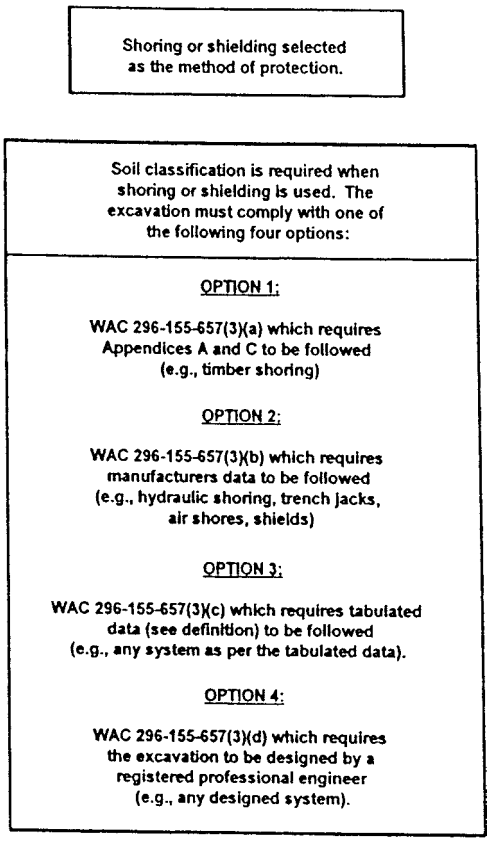

FIGURE N-29 - SHORING AND SHIELDING OPTIONS

[Statutory Authority: RCW 49.17.010, [49.17].040, [49.17].050. 02-12-098, § 296-155-66411, filed 6/5/02, effective 8/1/02. Statutory Authority: Chapter 49.17 RCW and RCW 49.17.040, [49.17].050 and [49.17].060. 92-22-067 (Order 92-06), § 296-155-66411, filed 10/30/92, effective 12/8/92.]

PART O
CONCRETE, CONCRETE FORMS, SHORING, AND MASONRY CONSTRUCTION

WAC 296-155-675 Scope, application, and definitions applicable to this part. (1) Scope and application. This part sets forth requirements to protect all construction employees from the hazards associated with concrete and masonry construction operations performed in workplaces covered under chapter 296-155 WAC.

(2) Definitions applicable to this part.

(a) "Bull float" means a tool used to spread out and smooth the concrete.

(b) "Formwork" means the total system of support for freshly placed or partially cured concrete, including the mold or sheeting (form) that is in contact with the concrete as well as all supporting members including shores, reshores, hardware, braces, and related hardware.

(c) "Jacking operation" means the task of lifting a slab (or group of slabs) vertically from one location to another (e.g., from the casting location to a temporary (parked) location, or from a temporary location to another temporary location, or to its final location in the structure), during the construction of a building/structure where the lift-slab process is being used.

(d) "Lift slab" means a method of concrete construction in which floor and roof slabs are cast on or at ground level and, using jacks, lifted into position.

(e) "Limited access zone" means an area alongside a masonry wall, which is under construction, and which is clearly demarcated to limit access by employees.

(f) "Precast concrete" means concrete members (such as walls, panels, slabs, columns, and beams) which have been formed, cast, and cured prior to final placement in a structure.

(g) "Reshoring" means the construction operation in which shoring equipment (also called reshores or reshoring equipment) is placed, as the original forms and shores are removed, in order to support partially cured concrete and construction loads.

(h) "Shore" means a supporting member that resists a compressive force imposed by a load.

(i) "Vertical slip forms" means forms which are jacked vertically during the placement of concrete.

(j) "Guy" means a line that steadies a high piece or structure by pulling against an off-center load.

[Statutory Authority: Chapter 49.17 RCW. 94-15-096 (Order 94-07), § 296-155-675, filed 7/20/94, effective 9/20/94; 91-11-070 (Order 91-01), § 296-155-675, filed 5/20/91, effective 6/20/91; 90-03-029 (Order 89-20), § 296-155-675, filed 1/11/90, effective 2/26/90; 89-11-035 (Order 89-03), § 296-155-675, filed 5/15/89, effective 6/30/89; Order 74-26, § 296-155-675, filed 5/7/74, effective 6/6/74.]

WAC 296-155-680 General provisions. (1) General. All equipment, material and construction techniques used in concrete construction and masonry work shall meet the applicable requirements for design, construction, inspection, testing, maintenance and operations as prescribed in ANSI

A10.9-1970, Safety Requirements for Concrete Construction and Masonry Work.

(2) Construction loads. No construction loads shall be placed on a concrete structure or portion of a concrete structure unless the employer determines, based on information received from a person who is qualified in structural design, that the structure or portion of the structure is capable of supporting the loads.

(3) Vertical loads. Vertical loads consist of a dead load plus an allowance for live load. The weight of formwork together with the weight of freshly placed concrete is dead load. The live load consists of the weight of workers, equipment, runways and impact, and shall be computed in pounds per square foot (psf) of horizontal projection.

(4) Lateral loads. Braces and shores shall be designed to resist all foreseeable lateral loads such as wind, cable tensions, inclined supports, impact of placement, and starting and stopping of equipment. The assumed value of load due to wind, impact of concrete, and equipment acting in any direction at each floor line shall not be less than one hundred pounds per lineal foot of floor edge or two percent of total dead load of the floor, whichever is greater. Wall forms shall be designed for a minimum wind load of ten psf, and bracing for wall forms should be designed for a lateral load of at least one hundred pounds per lineal foot of wall, applied at the top. Walls of unusual height require special consideration.

(5) Special loads. Formwork shall be designed for all special conditions of construction likely to occur, such as unsymmetrical placement of concrete, impact of machine-delivered concrete, uplift, and concentrated loads.

(6) Form supports and wedges shall be checked during concrete placement to prevent distortion or failure.

(7) Reinforcing steel.

(a) All protruding reinforcing steel, onto and into which employees could fall, shall be guarded to eliminate the hazard of impalement.

(b) Wire mesh rolls: Wire mesh rolls shall be secured at each end to prevent dangerous recoiling action.

(c) Guying: Reinforcing steel for walls, piers, columns, and similar vertical structures shall be guyed and supported to prevent overturning and to prevent collapse.

(8) Post-tensioning operations.

(a) No employee (except those essential to the post-tensioning operations) shall be permitted to be behind the jack during tensioning operations.

(b) Signs and barriers shall be erected to limit employee access to the post-tensioning area during tensioning operations.

(9) Working under loads.

(a) No employee shall be permitted to work under concrete buckets while buckets are being elevated or lowered into position.

(b) To the extent practical, elevated concrete buckets shall be routed so that no employee, or the fewest number of employees, are exposed to the hazards associated with falling concrete buckets.

(10) Personal protective equipment.

(a) No employee shall be permitted to apply a cement, sand, and water mixture through a pneumatic hose unless the employee is wearing protective head and face equipment.

(b) No employee shall be permitted to place or tie reinforcing steel more than six feet (1.8 m) above any adjacent working surface unless the employee is protected by personal fall arrest systems, safety net systems, or positioning device systems meeting the criteria of chapter 296-155 WAC, Part C-1.

(c) Each employee on the face of formwork or reinforcing steel shall be protected from falling 6 feet (1.8m) or more to lower levels by personal fall arrest systems, safety net systems, or positioning device systems meeting the criteria of chapter 296-155 WAC, Part C-1.

[Statutory Authority: RCW 49.17.010, [49.17].040, and [49.17].050. 00-14-058, § 296-155-680, filed 7/3/00, effective 10/1/00. Statutory Authority: Chapter 49.17 RCW. 94-15-096 (Order 94-07), § 296-155-680, filed 7/20/94, effective 9/20/94; 90-17-051 (Order 90-10), § 296-155-680, filed 8/13/90, effective 9/24/90; 90-03-029 (Order 89-20), § 296-155-680, filed 1/11/90, effective 2/26/90; 89-11-035 (Order 89-03), § 296-155-680, filed 5/15/89, effective 6/30/89. Statutory Authority: RCW 49.17.040 and 49.17.050. 86-03-074 (Order 86-14), § 296-155-680, filed 1/21/86; Order 74-26, § 296-155-680, filed 5/7/74, effective 6/6/74.]

WAC 296-155-681 Safe walking surfaces on concrete structural members. Structural members with studs, dowels, or shear connectors installed on the top side shall not be used as a walkway and/or means of access unless such studs, dowels, or shear connectors are covered with suitable material and in such a manner as to provide a walking surface at least as stable and free of hazards as the top surface of the member would provide without attachments installed.

Note: For the purpose of this section, "stud" means all protruding metal attachments to structural members.

[Statutory Authority: Chapter 49.17 RCW. 89-11-035 (Order 89-03), § 296-155-681, filed 5/15/89, effective 6/30/89.]

WAC 296-155-682 Requirements for equipment and tools. (1) Bulk cement storage. Bulk storage bins, containers, and silos shall be equipped with the following:

(a) Conical or tapered bottoms; and

(b) Mechanical or pneumatic means of starting the flow of material.

(2) No employee shall be permitted to enter storage facilities unless the ejection system has been shut down and locked out in accordance with WAC 296-155-429.

(3) Safety belts, harnesses, lanyards, lifelines or droplines, independently attached or attended, shall be used as prescribed in chapter 296-155 WAC, Part C-1.

(4) Concrete mixers. Concrete mixers with one cubic yard (.8 m3) or larger loading skips shall be equipped with the following:

(a) A mechanical device to clear the skip of materials; and

(b) Guardrails installed on each side of the skip.

(5) Power concrete trowels. Powered and rotating type concrete troweling machines that are manually guided shall be equipped with a control switch that will automatically shut off the power whenever the hands of the operator are removed from the equipment handles.

(6) Concrete buggies. Concrete buggy handles shall not extend beyond the wheels on either side of the buggy.

Note: Installation of knuckle guards on buggy handles is recommended.

(7) Runways.

(a) Runways shall be constructed to carry the maximum contemplated load with a safety factor of four, have a smooth running surface, and be of sufficient width for two buggies to pass. Single runs to have a minimum width of forty-two inches with turnouts. Runways to have standard railings. Where motor driven concrete buggies are used, a minimum four-inches by four-inches wheel guard shall be securely fastened to outside edge of runways.

(b) All concrete buggy runways which are 12 inches or more above a work surface or floor, or ramps with more than 4 percent incline shall be considered "elevated" runways.

Exception: Small jobs utilizing only one concrete buggy, or larger jobs utilizing a "one-way traffic pattern" may be exempt from the requirements for "turnouts" or for "sufficient width for two buggies to pass."

Exemption: Runways less than 12 inches above the floor or ground which are utilized by hard-powered buggies only, may be exempt from the requirements for guardrails and wheelguards.

(8) Concrete pumps and placing booms.

(a) Definitions.

"Concrete delivery hose" means a flexible concrete delivery hose which has two end couplings.

"Concrete pump" means a construction machine that pumps concrete.

"Controls" means the devices used to operate a machine.

"Delivery systems" means the pipe, hoses and components, through which the concrete is pumped.

"Grooved end" means a pipe clamp pipe connection where a groove is machined or rolled directly into the outside of the pipe wall (for example: Victualic).

"Material pressure" means the pressure exerted on the concrete inside the delivery system.

"Placing boom and placing unit" means a manual or power driven, slewable working device which:

• Consists of one or more extendable or folding parts for supporting the concrete delivery system, and directs the discharge into the desired location; and

• May be mounted on trucks, trailers, or special vehicles.

"Qualified person" means someone who:

• Possesses a recognized degree or certificate of professional standing; or

• Has extensive knowledge, training, and experience; or

• Successfully demonstrated the ability to resolve problems relating to the work.

"Restraining devices" means a sling, cable, or equivalent device used to minimize excess movement of a delivery system in case of separation.

"Whip hoses" means a suspended hose that has only one coupling and is used to direct the delivery of concrete.

(b) Equipment requirements.

(i) Equipment identification tag.

The employer must ensure the following identification is furnished if originally identified by the manufacturer and on all pumps manufactured after January 1, 1998:

• The manufacturer's name;

• The year of manufacture;

• The model and serial number;

• The maximum material pressure;

• The maximum allowable pressure in the hydraulic system; and

• The maximum weight per foot of delivery system including concrete.

(ii) Manufacturer's manual.

The employer must have the manufacturer's operation/safety manual or equivalent available for each concrete pump or placing boom.

(iii) Unsafe condition of equipment.

If during an equipment inspection a condition is revealed that might endanger workers, the equipment must not be returned to service until the condition is corrected.

(iv) Controls.

Controls must have their function clearly marked.

(v) Hydraulic systems.

(A) Concrete pumps and placing booms hydraulic systems must have pressure relief valves to prevent cylinder and boom damage.

(B) Hydraulic systems must have hydraulic holding valves if hose or coupling failure could result in uncontrolled vertical movement.

(vi) Certification.

In the event of failure of a structural member, overloading, or contact with energized electric power lines and before return to service, the equipment must be certified safe by:

• The manufacturer; or

• An agent of the manufacturer; or

• A professional engineer.

(vii) Marking weight. A permanent, legible notice stating the total weight of the unit must be marked on:

• Trailer or skid mounted concrete pumps;

• Placing booms; and

• All major detachable components over five hundred pounds.

(viii) Lifting a pump.

A concrete pump must be lifted using the lift points specified by the manufacturer or a professional engineer.

(ix) Emergency shutoff.

A concrete pump must have a clearly labeled emergency stop switch that stops the pumping action.

(x) Inlet and outlet guarding.

(A) The waterbox must have a fixed guard to prevent unintentional access to the moving parts.

(B) The agitator must be guarded with a point of operation guard in accordance with chapter 296-806 WAC, Machine safety, and the guard must be:

• Hinged or bolted in place;

• At least three inches distance from the agitator;

• Be capable of supporting a load of two hundred fifty pounds.

(C) A person must not stand on the guard when the pump or agitator is running.

(xi) Outriggers.

(A) Outriggers must be used in accordance with the manufacturer's specifications.

(B) Concrete pump trucks manufactured after January 1, 1998, must have outriggers or jacks permanently marked to indicate the maximum loading they transmit to the ground.

(xii) Load on a placing boom.

(A) The manufacturer's or a licensed, registered, structural engineer's specifications for the placing boom must not be exceeded by:

• The weight of the load;

• The length and diameter of suspended hose;

• The diameter and weight of mounted pipe.

(B) A concrete placing boom must not be used to drag hoses or lift other loads.

(C) All engineering calculations regarding modifications must be:

• Documented;

• Recorded; and

• Available upon request.

(xiii) Pipe diameter thickness. The pipe wall thickness must be measured in accordance with the manufacturer's instruction, and:

• Be sufficient to maintain a burst pressure greater than the maximum pressure the pump can produce;

• The pipe sections must be replaced when measurements indicate wall thickness has been reduced to the limits specified by the manufacturer.

(xiv) Pipe clamps.

(A) Concrete must not be pumped through a delivery system with grooved ends, such as those for Victualic-type couplers.

(B) Pipe clamps must have a pressure rating at least equal to the pump pressure rating.

(C) Pipe clamps contact surfaces must be free of concrete and other foreign matter.

(D) If quick connect clamps are used, they must be pinned or secured to keep them from opening when used in a vertical application.

(xv) Delivery pipe.

(A) Delivery pipe between the concrete pump and the placing system must be supported and anchored to prevent movement and excessive loading on clamps.

(B) Double ended hoses must not be used as whip hoses.

(C) Attachments must not be placed on whip hoses (i.e., "S" hooks, valves, etc.).

Table 1, Nonmandatory
Recommended maximum yards per hour through hose

Hose Diameter	Hose Length (12' and less) Max. yards per hour	Hose Length (12' and longer) Max. yards per hour
2"	30	30
3"	90	50
4"	160	110
5"	See manufacturer specs	See manufacturer specs

• The above figures are based on a minimum of a 4" slump and a 5 sack mix.

• Variables in mix design can have an effect on these ratings.

• Aggregate should not exceed 1/3 the diameter of the delivery system.

(xvi) Restraining. A restraining device must:

• Be used on attachments suspended from the boom tips; and

• Have a load rating not less than one-fifth of its ultimate breaking strength.

(xvii) Equipment inspection.

(A) An inspection must be conducted annually for the first five years and semiannually thereafter and must include the following:

• Nondestructive testing of all sections of the boom by a method capable of ensuring the structural integrity of the boom;

• Be conducted by a qualified person or by a private agency.

(B) The inspection report must be documented and a copy maintained by the employer and in each unit inspected. It must contain the following:

• The identification, including the serial numbers and manufacturer's name, of the components and parts inspected and tested;

• A description of the test methods and results;

• The names and qualifications of the people performing the inspection;

• A listing of necessary repairs; and

• The signature of the manufacturer, an agent of the manufacturer, or a qualified person.

Note: See WAC 296-155-628 (8)(d) for the inspection worksheet criteria.

(xviii) Equipment repair.

(A) Replacement parts must meet or exceed the original manufacturer's specifications or be certified by a registered professional structural engineer.

(B) A properly certified welder must perform any welding on the boom, outrigger, or structural component.

(xix) Compressed air cleaning of the piping system. To clean the piping system:

(A) The pipe system must be securely anchored before it is cleaned out.

(B) The flexible discharge hose must be removed.

(C) Workers not essential to the cleaning process must leave the vicinity.

(D) The compressed air system must have a shutoff valve.

(E) Blow out caps must have a bleeder valve to relieve air pressure.

(F) A trap basket or containment device (i.e., concrete truck, concrete bucket) must be available and secured to receive the clean out device.

(G) Delivery pipes must be depressurized before clamps and fittings are released.

(c) Qualification and training requirements.

(i) Operator trainee—Qualification requirements. To be qualified to become a concrete pump operator, the trainee must meet the following requirements unless it can be shown that failure to meet the requirements will not affect the operation of the concrete pump boom.

(A) Vision requirements:

• At least 20/30 Snellen in one eye and 20/50 in the other. Corrective lenses may be used to fulfill this requirement;

• Ability to distinguish colors, regardless of position, if color differentiation is required;

• Normal depth perception and field of vision.

(B) Hearing requirements: Hearing adequate to meet operational demands. Corrective devices may be used to fulfill this requirement.

(ii) Operator trainee—Training requirements. Operator trainee training requirements include, but are not limited to, the following:

(A) Demonstrated their ability to read and comprehend the pump manufacturer's operation and safety manual.

(B) Be of legal age to perform the duties required.

(C) Received documented classroom training and testing (as applicable) on these recommended subjects:

• Driving, operating, cleaning and maintaining concrete pumps, placing booms, and related equipment;

• Jib/boom extensions;

• Boom length/angle;

• Manufacturer's variances;

• Radii;

• Range diagram, stability, tipping axis; and

• Structural/tipping determinations.

(D) Maintain and have available upon request a copy of all training materials and a record of training.

(E) Satisfactorily completed a written examination for the concrete pump boom for which they are becoming qualified. It will cover:

• Safety;

• Operational characteristics and limitations; and

• Controls.

(iii) Operator—Qualification requirements. Operators will be considered qualified when they have:

(A) Completed the operator trainee requirements listed in (c)(i) and (ii) of this subsection.

(B) Completed a program of training conducted by a qualified person, including practical experience under the direct supervision of a qualified person.

(C) Passed a practical operating examination of their ability to operate a specific model and type of equipment. Possess the knowledge and the ability to implement emergency procedures.

(D) Possess the knowledge regarding the restart procedure after emergency stop has been activated.

(E) Possess the proper class of driver's license to drive the concrete pump truck.

(F) Demonstrate the ability to comprehend and interpret all labels, safety decals, operator's manuals, and other information required to safely operate the concrete pump.

(G) Be familiar with the applicable safety requirements.

(H) Understand the responsibility for equipment maintenance.

(d) Concrete pump inspection worksheet criteria. Concrete pump trucks will be inspected using the following criteria: The manufacturer's required inspection criteria will be followed in all instances.

Note: DOT requirements for inspections - Ref. 49.C.F.R.396.11, Driver Vehicle Inspections and 396.13, Driver Pre-Trip Inspections; and WAC 296-155-610.

(i) Hydraulic systems.

(A) Oil level;

(B) Hoses;

(C) Fittings;

(D) Holding valves;

(E) Pressure settings;

(F) Hydraulic cylinders;

(G) Ensure that the emergency stop system is functioning properly;

(H) All controls clearly marked.

(ii) Electrical.

(A) All systems functioning properly.

(B) All remote control functions are operating properly. Ensure that the emergency stop system is functioning properly.

(C) All controls clearly marked.

(iii) Structural.

(A) Visual inspection for cracks, corrosion, and deformations of the concrete pump with placing boom structure, and all load carrying components such as outriggers, cross frames, torsion box beams, and delivery line support structures that may lead to nondestructive testing.

(B) Visual examination of all links, pivots, pins, and bolts.

(C) Vertical and horizontal movement at the turret, turntable, rotation gear lash, bearing tolerances, not to exceed manufacturer's specifications.

(iv) Piping systems.

(A) Wall thickness must not exceed original manufacturer's specifications.

(B) Mounting hardware for attaching delivery system.

(C) Correct clamps and safety pins.

(v) Safety decals.

All safety decals shall be in place as required by the manufacturer.

(9) Concrete buckets.

(a) Concrete buckets equipped with hydraulic or pneumatic gates shall have positive safety latches or similar safety devices installed to prevent premature or accidental dumping.

(b) Concrete buckets shall be designed to prevent concrete from hanging up on top and the sides.

(c) Riding of concrete buckets for any purpose shall be prohibited, and vibrator crews shall be kept out from under concrete buckets suspended from cranes or cableways.

(d) When discharging on a slope, the wheels of ready-mix trucks shall be blocked and the brakes set to prevent movement.

(10) Tremies. Sections of tremies and similar concrete conveyances shall be secured with wire rope (or equivalent materials in addition to the regular couplings or connections).

(11) Bull floats. Bull float handles, used where they might contact energized electrical conductors, shall be constructed of nonconductive material or insulated with a nonconductive sheath whose electrical and mechanical characteristics provide the equivalent protection of a handle constructed of nonconductive material.

(12) Masonry saws shall be constructed, guarded, and operated in accordance with WAC 296-155-367 (1) through (4).

(13) Lockout/tagout procedures. No employee shall be permitted to perform maintenance or repair activity on equipment (such as compressors, mixers, screens, or pumps used for concrete and masonry construction activities) where the inadvertent operation of the equipment could occur and cause injury, unless all potentially hazardous energy sources have been locked out and tagged in accordance with chapter 296-155 WAC, Part I.

[Statutory Authority: RCW 49.17.010, 49.17.040, 49.17.050, and 49.17.060. 04-14-028, § 296-155-682, filed 6/29/04, effective 1/1/05. Statutory Authority: RCW 49.17.010, [49.17].040, [49.17].050 and chapter 49.17 RCW. 00-21-102, § 296-155-682, filed 10/18/00, effective 2/1/01. Statutory Authority: Chapter 49.17 RCW. 95-10-016, § 296-155-682, filed 4/25/95, effective 10/1/95; 94-15-096 (Order 94-07), § 296-155-682, filed 7/20/94, effective 9/20/94; 91-03-044 (Order 90-18), § 296-155-682, filed 1/10/91, effective 2/12/91; 90-17-051 (Order 90-10), § 296-155-682, filed 8/13/90, effective 9/24/90; 89-11-035 (Order 89-03), § 296-155-682, filed 5/15/89, effective 6/30/89.]

WAC 296-155-683 Concrete finishing. (1) Scaffolds for use of cement finishers shall comply with the requirements of chapter 296-155 WAC, Part J-1, Scaffolds.

(2) Where grinders, chippers, and other equipment is used which creates a thrust force while working on scaffolding, such scaffold shall be securely tied to a structure or held in with weighted drop lines.

(3) Grinding and dressing operations carried on within closed rooms, stairwells, elevator shafts, etc., shall be provided with forced air ventilation.

(4) Grinding machine operators shall wear respirators whenever machines are in operation or where dust hazard exists.

(5) Eye protection shall be worn by workers engaged in grinding, chipping, or sacking concrete as required by WAC 296-155-215.

[Statutory Authority: RCW 49.17.010, [49.17].040, [49.17].050 and [49.17].060. 98-05-046, § 296-155-683, filed 2/13/98, effective 4/15/98. Statutory Authority: Chapter 49.17 RCW. 89-11-035 (Order 89-03), § 296-155-683, filed 5/15/89, effective 6/30/89.]

WAC 296-155-684 Requirements for cast in place concrete. (1) General requirements for formwork.

(a) Formwork shall be designed, fabricated, erected, supported, braced, and maintained so that it will be capable of supporting without failure all vertical and lateral loads that may reasonably be anticipated to be applied to the formwork. Formwork which is designed, fabricated, erected, supported, braced, and maintained in conformance with the Appendix to this section will be deemed to meet the requirements of this subdivision.

(b) Any form, regardless of size, shall be planned in every particular and designed and constructed with an adequate factor of safety. In addition to computable loading, additional form pressures may result from impact during concrete placement, sudden lowering of temperatures retarding the set and increasing the liquid head or static pressure, vibrations of the form or concrete, uneven stressing resulting from failure or weakening of form members, or impact from concrete buckets or placing equipment. As a result, an adequate factor of safety is required to offset these unpredictable conditions.

(c) The thoroughness of planning and design shall be governed by the size, complexity, and intended use of the form. Formwork which is complex in nature or which will be subjected to unusually high concrete pressures shall be designed or approved for use by an engineer or experienced form designer.

(2) Drawings or plans, including all revisions, for the jack layout, formwork (including shoring equipment), working decks, and scaffolds, shall be available at the jobsite.

(3) Shoring and reshoring.

(a) General: Shoring installations constructed in accordance with this standard shall be designed in accordance with American National Standard Recommended Practice for Concrete Formwork, ANSI-(ACI 347-78), Formwork for Concrete ACI 318-83, or with the following publications of the Scaffolding & Shoring Institute: Recommended Standard Safety Code for Vertical Shoring, 1970; Single Post Shore Safety Rules, 1969; and Steel Frame Shoring Safety, Safety Rules, 1969.

(b) All shoring equipment shall be inspected prior to erection to determine that it is as specified in the shoring layout.

(c) A shoring layout shall be prepared or approved by a person qualified to analyze the loadings and stresses which are induced during the construction process.

(d) A copy of the shoring layout shall be available at the jobsite.

(e) The shoring layout shall include all details of the specification, including unusual conditions such as heavy beams, sloping areas, ramps, and cantilevered slabs, as well as plan and elevation views.

(f) Shoring equipment found to be damaged such that its strength is reduced to less than that required by WAC 296-155-684 (1)(a) shall not be used for shoring.

(g) Erected shoring equipment shall be inspected immediately prior to, during, and immediately after concrete placement.

(h) Upon inspection, shoring equipment that is found to be damaged or weakened shall be immediately removed and replaced.

(i) The sills for shoring shall be sound, rigid, and capable of carrying the maximum intended load without settlement or displacement.

(j) All base plates, shore heads, extension devices, and adjustment screws shall be in firm contact, and secured when necessary, with the foundation and the form.

(k) Eccentric loads on shore heads and similar members shall be prohibited unless these members have been designed for such loading.

(l) The minimum total design load for any shoring used in slab and beam structures shall be not less than one hundred pounds per square foot for the combined live and dead load regardless of slab thickness; however, the minimum allowance for live load and formwork shall be not less than twenty pounds per square foot in addition to the weight of the concrete. Additional allowance for live load shall be added for special conditions other than when placing concrete for standard-type slabs and beams. Shoring shall also be designed to resist all foreseeable lateral loads such as wind, cable tensions, inclined supports, impact of placement, and starting and stopping of equipment. The assumed value of load due to wind, impact of concrete, and equipment acting in any direction at each floor line shall not be less than one hundred pounds per lineal foot of floor edge or two percent of total dead load of the floor, whichever is greater. (See subsection (3)(b) of this section.)

(m) When motorized carts are used, the design load shall be increased twenty-five pounds per square foot.

(4) The design stresses for form lumber and timbers shall be within the tolerance of the grade, condition, and species of lumber used.

(5) The design stresses used for form lumber and timber shall be shown on all drawings, specifications, and shoring layouts.

(6) All load-carrying timber members of scaffold framing shall be a minimum of 1500 f (stress grade) construction grade lumber. All dimensions are nominal sizes except that where rough sizes are noted, only rough or undressed lumber of the size specified shall satisfy minimum requirements.

(7) When shoring from soil, an engineer or other qualified person shall determine that the soil is adequate to support the loads which are to be placed on it.

(8) Precautions shall be taken so that weather conditions do not change the load-carrying conditions of the soil below the design minimum.

(9) When shoring from fill or when excessive earth disturbance has occurred, an engineer or other qualified person shall supervise the compaction and reworking of the disturbed area and determine that it is capable of carrying the loads which are to be imposed upon it.

(10) Suitable sills shall be used on a pan or grid dome floor or any other floor system involving voids where vertical shoring equipment could concentrate an excessive load on a thin concrete section.

(11) When temporary storage of reinforcing rods, material, or equipment on top of formwork becomes necessary, these areas shall be sufficient to meet the loads.

(12) If any deviation in the shoring plan is necessary because of field conditions, the person who prepared the shoring layout shall be consulted for approval of the actual field setup before concrete is placed.

(13) The shoring setup shall be checked to insure that all details of the layout have been met.

(14) The completed shoring setup shall be a homogenous unit or units and shall have the specified bracing to give it lateral stability.

(15) The shoring setup shall be checked to make certain that bracing specified in the shoring layout for lateral stability is in place.

(16) All vertical shoring equipment shall be plumb. Maximum allowable deviation from the vertical is one-eighth inch in three feet. If this tolerance is exceeded, the shoring equipment shall not be used until readjusted within this limit.

(17) Upon inspection, shoring equipment that is found to be damaged or weakened shall be immediately removed and replaced.

(18) Shoring equipment shall not be released or removed until the approval of a qualified engineer has been received.

(19) Removal of shoring equipment shall be planned so that the equipment which is still in place is not overloaded.

(20) Slabs or beams which are to be reshored should be allowed to take their actual permanent deflection before final adjustment of reshoring equipment is made.

(21) While the reshoring is underway, no construction loads shall be permitted on the partially-cured concrete.

(22) The allowable load on the supporting slab shall not be exceeded when reshoring.

(23) The reshoring shall be thoroughly checked to determine that it is properly placed and that it has the load capacity to support the areas that are being reshored.

[Statutory Authority: Chapter 49.17 RCW. 94-15-096 (Order 94-07), § 296-155-684, filed 7/20/94, effective 9/20/94; 89-11-035 (Order 89-03), § 296-155-684, filed 5/15/89, effective 6/30/89.]

WAC 296-155-685 Tubular welded frame shoring. (1) Metal tubular frames used for shoring shall have allowable loads based on tests conducted according to the Recommended Procedure for Compression Testing of Scaffolds and Shores, Scaffolding & Shoring Institute, 1967.

(2) Design of shoring layouts shall be based on allowable loads which were obtained using the test procedures of subsection (1) of this section and on at least a two and one-half to one safety factor.

(3) All metal frame shoring equipment shall be inspected before erection.

(4) Metal frame shoring equipment and accessories shall not be used if heavily rusted, bent, dented, rewelded, or having broken weldments or other defects.

(5) All locking devices on frames and braces shall be in good working order, coupling pins shall align the frame or panel legs, pivoted cross braces shall have their center pivot in place, and all components shall be in a condition similar to that of original manufacture.

(6) When checking the erected shoring frames with the shoring layout, the spacing between towers and cross-brace spacing shall not exceed that shown on the layout, and all locking devices shall be in the closed position.

(7) Devices for attaching the external lateral stability bracing shall be securely fastened to the legs of the shoring frames.

(8) All baseplates, shore heads, extension devices, or adjustment screws shall be in firm contact with the footing sill and the form material, and shall be snug against the legs of the frames.

(9) Eccentric loads on shore heads and similar members shall be prohibited unless the shore heads have been designed for such loading.

(10) When formwork is installed at an angle, or sloping, or when the surface shored from is sloping, the shoring shall be designed for such loading.

(11) Adjustment screws shall not be adjusted to raise formwork after the concrete is in place.

[Statutory Authority: Chapter 49.17 RCW. 89-11-035 (Order 89-03), § 296-155-685, filed 5/15/89, effective 6/30/89; Order 74-26, § 296-155-685, filed 5/7/74, effective 6/6/74.]

WAC 296-155-686 Tube and coupler shoring. (1) Tube and coupler towers used for shoring shall have allowable loads based on tests conducted according to the Recommended Procedure for Compression Testing of Scaffolds and Shores, Scaffolding & Shoring Institute, 1967.

(2) Design of shoring layouts shall be based on working loads which were obtained using the test procedures of subsection (1) of this section and on at least a two and one-half to one safety factor.

(3) All tube and coupler components shall be inspected before being used.

(4) Tubes of shoring structures shall not be used if heavily rusted, bent, dented, or having other defects.

(5) Couplers (clamps) shall not be used if deformed, broken, or having defective or missing threads on bolts, or other defects.

(6) The material used for the couplers (clamps) shall be of a structural type such as drop-forged steel, malleable iron, or structural grade aluminum. Gray cast iron shall not be used.

(7) When checking the erected shoring towers with the shoring layout, the spacing between posts shall not exceed that shown on the layout, and all interlocking of tubular members and tightness of couplers should be checked.

(8) All baseplates, shore heads, extension devices, or adjustment screws shall be in firm contact with the footing sill and the form material, and shall be snug against the posts.

(9) Eccentric loads on shore heads and similar members shall be prohibited unless the shore heads have been designed for such loading.

(10) Special precautions shall be taken when formwork is at angles, or sloping, or when the surface shored from is sloping.

(11) Adjustment screws shall not be adjusted to raise formwork after the concrete is in place.

[Statutory Authority: Chapter 49.17 RCW. 89-11-035 (Order 89-03), § 296-155-686, filed 5/15/89, effective 6/30/89.]

WAC 296-155-687 Single post shores. (1) When checking erected single post shores with the shoring layout, the spacing between shores in either direction shall not exceed that shown on the layout, and all clamps, screws, pins, and all other components shall be in the closed or engaged position.

(2) For stability, single post shores shall be horizontally braced in both the longitudinal and transverse directions. Diagonal bracing shall also be installed. Such bracing shall be installed as the shores are being erected.

(3) Devices which attach to the external lateral stability bracing shall be securely fastened to the single post shores.

(4) All baseplates or shore heads of single post shores shall be in firm contact with the footing sill and the form material.

(5) Whenever single post shores are used in more than one tier, the layout shall be designed and inspected by a structural engineer.

(6) Eccentric loads on shore heads shall be prohibited unless the shore heads have been designed for such loading.

(7) When formwork is at an angle, or sloping, or when the surface shored from is sloping, the shoring shall be designed for such loading.

(8) Adjustment of single post shores to raise formwork shall not be made after concrete is in place.

(9) Respecting fabricated single post shores, the following shall apply:

(a) The clamp used for adjustable timber single post shores shall have working load ratings based on tests conducted according to the standard test procedures for fabricated single post shores in Recommended Procedure for Compression Testing of Scaffolds and Shores, Scaffolding & Shoring Institute, 1967, and on at least a three to one safety factor.

(b) Shoring layouts shall be made using working loads which were obtained using the test procedures of (a) of this subsection, and on at least a three to one safety factor.

(c) All fabricated single post shores shall be inspected before being used.

(d) Fabricated single post shores shall not be used if heavily rusted, bent, dented, rewelded, or having broken weldments or other defects. If they contain timber, they shall not be used if timber is split, cut, has sections removed, is rotted, or otherwise structurally damaged.

(e) All clamps, screws, pins, threads, and all other components shall be in a condition similar to that of original manufacture.

(10) Respecting adjustable timber single post shores, the following shall apply:

(a) The clamp used for adjustable timber single post shores shall have working load ratings based on tests conducted according to the standard test procedures for fabricated single post shores in Recommended Procedure for Compression Testing of Scaffolds and Shores, Scaffolding & Shoring Institute, 1967, and on at least a three to one safety factor.

(b) Timber used shall have the safety factor and allowable working load for each grade and species as recommended in the Tables for wooden columns in the Wood Structural Design Data Book, National Forest Products Association, 1970.

(c) The shoring layout shall be made using the allowable load obtained by using the test procedure for the clamp or Tables for timber referred to in (a) and (b) of this subsection.

(d) All timber and adjusting devices to be used for adjustable timber single post shores shall be inspected before erection.

(e) Timber shall not be used if it is split, cut, has sections removed, is rotted, or is otherwise structurally damaged.

(f) Adjusting devices shall not be used if heavily rusted, bent, dented, rewelded, or having broken weldments or other defects.

(g) All nails used to secure bracing on adjustable timber single post shores shall be driven home and the point of the nail bent over.

(11) Respecting timber single post shores, the following shall apply:

(a) Timber used as single post shores shall have the safety factor and allowable working load for each grade and species as recommended in the Tables for wooden columns in the Wood Structural Design Data Book, National Forest Products Association, 1970.

(b) The shoring layout shall be prepared by using working loads obtained by using the Tables referred to in (a) of this subsection.

(c) All timber to be used for single post shoring shall be inspected before erection.

(d) Timber shall not be used if it is split, cut, has sections removed, is rotted, or is otherwise structurally damaged.

(e) All nails used to secure bracing on timber single post shores shall be driven home and the point of the nail bent over.

(12) Tiered single post shores. Whenever single post shores are used one on top of another (tiered), the employer

shall comply with the following specific requirements in addition to the general requirements for formwork:

(a) The design of the shoring shall be prepared by a qualified designer and the erected shoring shall be inspected by an engineer qualified in structural design.

(b) The single post shores shall be vertically aligned.

(c) The single post shores shall be spliced to prevent misalignment.

(d) The single post shores shall be adequately braced in two mutually perpendicular directions at the splice level. Each tier shall also be diagonally braced in the same two directions.

(e) Adjustment of single post shores to raise formwork shall not be made after the placement of concrete.

(f) Reshoring shall be erected, as the original forms and shores are removed, whenever the concrete is required to support loads in excess of its capacity.

[Statutory Authority: Chapter 49.17 RCW. 89-11-035 (Order 89-03), § 296-155-687, filed 5/15/89, effective 6/30/89.]

WAC 296-155-688 Vertical slip forms. (1) Slip forms shall be designed and constructed, and the form movement carried out, under the immediate supervision of a person or persons experienced in slip form design and operation. Drawings prepared by a qualified engineer, showing the jack layout, formwork, working decks, and scaffolding, shall be available at the jobsite, and followed.

(2) The steel rods or pipe on which the jacks climb or by which the forms are lifted shall be designed for this purpose. Such rods must be adequately braced where not encased in concrete.

(3) Forms shall be designed to prevent excessive distortion of the structure during the jacking operation.

(4) All vertical slip forms shall be provided with scaffolding or work platforms completely encircling the area of placement.

(5) Jacks and vertical supports shall be positioned in such a manner that the loads do not exceed the rated capacity of the jacks.

(6) The jacks or other lifting devices shall be provided with mechanical dogs or other automatic holding devices to support the slip forms whenever failure of the power supply or lifting mechanism occurs.

(7) The form structure shall be maintained within all design tolerances specified for plumbness during the jacking operation.

(8) Lifting shall proceed steadily and uniformly and shall not exceed the predetermined safe rate of lift. A jacking system, which provides precise, simultaneous movement of the entire form in small preselected increments, is recommended for large structures.

(9) Workers placing reinforcing steel shall comply with the requirements of chapter 296-155 WAC, Part C-1 when working above the scaffold level.

(10) The total allowable load on slip form platforms shall be determined by the design engineer and enforced by the field supervisor.

(11) Lateral and diagonal bracing of the forms shall be provided to prevent excessive distortion of the structure during the sliding operation.

(12) While the slide is in operation, the form structure shall be maintained in line and plumb.

(13) A field supervisor experienced in slip form construction shall be present on the deck at all times.

[Statutory Authority: RCW 49.17.010, [49.17].040, [49.17].050 and [49.17].060. 98-05-046, § 296-155-688, filed 2/13/98, effective 4/15/98. Statutory Authority: Chapter 49.17 RCW. 91-03-044 (Order 90-18), § 296-155-688, filed 1/10/91, effective 2/12/91; 89-11-035 (Order 89-03), § 296-155-688, filed 5/15/89, effective 6/30/89.]

WAC 296-155-689 Placing and removal of forms. (1) When moved or raised by crane, cableway, A-frame, or similar mechanical device, forms shall be securely attached to slings having a minimum safety factor of five. Use of No. 9 tie wire, fiber rope, and similar makeshift lashing shall be prohibited.

(2) Taglines shall be used in moving panels or other large sections of forms by crane or hoist.

(3) All hoisting equipment, including hoisting cable used to raise and move forms shall have a minimum safety factor incorporated in the manufacturer's design, and the manufacturer's recommended loading shall not be exceeded. Field-fabricated or shop-fabricated hoisting equipment shall be designed or approved by a registered professional engineer, incorporating a minimum safety factor of five in its design. Panels and built-up form sections shall be equipped with metal hoisting brackets for attachment of slings.

(4) Forms intended for use where there is a free fall of over ten feet shall be equipped with adequate scaffolding and guardrails, or employees working on the forms shall be protected from falls in accordance with chapter 296-155 WAC, Part C-1 during forming and stripping operations.

(5) Vertical forms being raised or removed in sections shall not be released until adequately braced or secured. Overhead forms shall not be released until adequately braced or secured.

(6) Workers or others at lower levels shall be protected from falling materials. Appropriate warning signs shall be erected along walkways.

(7) Forms shall not be removed until the concrete is cured. The concrete shall be adequately set in order to permit safe removal of the forms, shoring, and bracing. Engineer's specifications and local building codes shall be adhered to in determining the length of time forms should remain in place following concrete placement. In addition, tests shall be made on field-cured concrete specimens in order to insure that concrete has obtained sufficient strength to safely support the load prior to removal of forms.

[Statutory Authority: RCW 49.17.010, [49.17].040, [49.17].050 and [49.17].060. 98-05-046, § 296-155-689, filed 2/13/98, effective 4/15/98. Statutory Authority: Chapter 49.17 RCW. 91-03-044 (Order 90-18), § 296-155-689, filed 1/10/91, effective 2/12/91; 89-11-035 (Order 89-03), § 296-155-689, filed 5/15/89, effective 6/30/89.]

WAC 296-155-690 Appendix to WAC 296-155-684 cast in place concrete. General requirements for formwork.

(This Appendix is nonmandatory.)

This Appendix serves as a nonmandatory guideline to assist employers in complying with the formwork requirements in WAC 296-155-684 (1)(a). Formwork which has been designed, fabricated, erected, braced, supported, and maintained in accordance with Sections 6 and 7 of the Amer-

ican National Standard for Construction and Demolition Operations-Concrete and Masonry Work, ANSI A10.9-1983, shall be deemed to be in compliance with the provision of WAC 296-155-684 (1)(a).

[Statutory Authority: Chapter 49.17 RCW. 90-03-029 (Order 89-20), § 296-155-690, filed 1/11/90, effective 2/26/90; 89-11-035 (Order 89-03), § 296-155-690, filed 5/15/89, effective 6/30/89. Statutory Authority: RCW 49.17.040 and 49.17.050. 86-03-074 (Order 86-14), § 296-155-690, filed 1/21/86; Order 74-26, § 296-155-690, filed 5/7/74, effective 6/6/74.]

WAC 296-155-691 Precast concrete and tilt-up operations. (1) It shall be the responsibility of the contractor to use accessories which are designed to be compatible.

(2) The design capacity of all lifting devices and accessories shall be known. The devices and accessories with the appropriate capacity shall be used.

(3) Prior to pouring the panels of a tilt-up type construction job, a set of plans or job specifications, including lifting procedures, shall be drawn up.

(a) These plans shall be at the job site and made available upon request.

(b) Any changes made in the rigging procedure of a tilt-up panel or slab shall provide the same degree of safety as required by the original plans.

(c) The plans or specifications shall contain the following information:

(i) The type, size, and location of all lifting inserts.

(ii) The type, size, and location of all brace inserts or fittings for guy wires in each panel and floor or support.

(iii) The size of braces or guys to be used.

(iv) The compression strength which concrete panels must attain prior to being lifted.

(4) The following conditions shall be included in the erection process and shall be incorporated in the design plan:

(a) Braces and all associated components of the bracing system shall be designed to incorporate a safety factor of one and one-half to resist any normal stresses to which they may be subjected, including normal high wind velocity pressures for the area.

(b) Precast concrete wall units, structural framing, and tilt-up wall panels shall be adequately supported to prevent overturning and to prevent collapse until permanent connections are completed.

(c) Floor braces used to secure panel sections shall be placed at an angle of not less than forty-five degrees or more than sixty degrees from horizontal when physically possible to install in this manner.

(d) The bracing on all panel sections shall be installed in such a manner as to prevent the panel from accidentally rotating.

(e) Each panel section not secured by other means shall have a minimum of two braces. The braces shall be installed in such a manner as to evenly distribute the load or guy wires, when properly installed, may be used in lieu of stiff leg braces.

(f) If braces are attached to a panel or slab by bolts tightened into inserts installed in holes drilled in concrete, the type of inserts used and method of installation shall be such as to develop the required strength to be maintained for the bracing system.

(g) Inserts to be installed for lifting sections of tilt-up precast panels shall be designed mechanically to maintain a safety factor of three.

(h) Lifting inserts which are embedded or otherwise attached to precast concrete members, other than the tilt-up members, shall be capable of supporting at least four times the maximum intended load applied or transmitted to them.

(i) The compression strength of the concrete shall be such that when the proper type, size, and amount of inserts are installed a minimum safety factor of two will be maintained.

(j) Lifting hardware shall be capable of supporting at least five times the maximum intended load applied or transmitted to the lifting hardware.

(k) Lifting bolts or other lifting devices which have been bent, worn, or are defective shall be discarded.

(l) The upper and lower sections of telescoping type braces shall be secured by high tensile steel pins or bolts which provide adequate shear strength and which will positively secure against accidental removal.

(m) Manufactured products shall not be altered in a manner which would reduce the safe working load to less than its original value.

(n) Inserts shall be positioned so that bolts, or lifting devices, when inserted, will be perpendicular to the face on which they are placed.

(5) Design of the panels and layout of the pour shall be made in such a manner so that when picking, the top of the panel will be away from the crane. If this is not possible, the contractor shall consult with a representative of the department and the crane company involved to determine the procedure to be followed in lifting and placing in its permanent position safely. Panels shall be lifted and handled in such a manner that they will not strike the hoisting equipment, in case of failure.

(a) Physical stops shall be provided which will prevent the bottom edge of a panel being set from slipping off the edge of its supporting structure.

(b) Tilt-up panels shall not be set when there is a possibility that wind velocity would create a hazardous condition.

(c) A qualified signalperson shall be designated and shall consult with the crane operator on lifting procedures prior to making the pick. The signalperson shall be located in such a position during the pick of the panel that they can observe both the crane operator and the employees working in the immediate area.

(d) During the lifting process, workers shall keep clear of the under side of the panel.

(e) Persons not involved in the lifting process shall be kept clear of the hazardous area near where panels are being raised, moved or placed.

(f) If braces must be removed temporarily during construction, other effective means shall be provided to safely support the panel during the interim period.

(g) Each panel shall be properly braced or otherwise secured prior to removal of the hoisting equipment.

(h) Short panels or sections not otherwise supported by floor, footings, columns or other structure, shall be properly shored.

[Statutory Authority: Chapter 49.17 RCW. 94-15-096 (Order 94-07), § 296-155-691, filed 7/20/94, effective 9/20/94; 90-17-051 (Order 90-10), § 296-

155-691, filed 8/13/90, effective 9/24/90; 89-11-035 (Order 89-03), § 296-155-691, filed 5/15/89, effective 6/30/89.]

WAC 296-155-694 Requirements for lift-slab construction operations. (1) Lift-slab operations shall be designed and planned by a registered professional engineer who has experience in lift-slab construction. Such plans and designs shall be implemented by the employer and shall include detailed instructions and sketches indicating the prescribed method of erection. These plans and designs shall also include provisions for ensuring lateral stability of the building/structure during construction.

(2) Jacks/lifting units shall be marked to indicate their rated capacity as established by the manufacturer.

(3) Jacks/lifting units shall not be loaded beyond their rated capacity as established by the manufacturer.

(4) Jacking equipment shall be capable of supporting at least two and one-half times the load being lifted during jacking operations and the equipment shall not be overloaded. For the purpose of this provision, jacking equipment includes any load bearing component which is used to carry out the lifting operation(s). Such equipment includes, but is not limited to, the following: Threaded rods, lifting attachments, lifting nuts, hook-up collars, T-caps, shearheads, columns, and footings.

(5) Jacks/lifting units shall be designed and installed so that they will neither lift nor continue to lift when they are loaded in excess of their rated capacity.

(6) Jacks/lifting units shall have a safety device installed which will cause the jacks/lifting units to support the load in any position in the event any jack/lifting unit malfunctions or losses [loses] its lifting ability.

(7) Jacking operations shall be synchronized in such a manner to ensure even and uniform lifting of the slab. During lifting, all points at which the slab is supported shall be kept within 1/2 inch of that needed to maintain the slab in a level position.

(8) If leveling is automatically controlled, a device shall be installed that will stop the operation when the 1/2 inch tolerance set forth in subsection (7) of this section is exceeded or where there is a malfunction in the jacking (lifting) system.

(9) If leveling is maintained by manual controls, such controls shall be located in a central location and attended by a competent person while lifting is in progress. In addition to meeting the definition in WAC 296-155-012(4), the competent person must be experienced in the lifting operation and with the lifting equipment being used.

(10) The maximum number of manually controlled jacks/lifting units on one slab shall be limited to a number that will permit the operator to maintain the slab level within specified tolerances of subsection (7) of this section, but in no case shall that number exceed 14.

(11) No employee, except those essential to the jacking operation, shall be permitted in the building/structure while any jacking operation is taking place unless the building/structure has been reinforced sufficiently to ensure its integrity during erection. The phrase "reinforced sufficiently to ensure its integrity" used in this subsection means that a registered professional engineer, independent of the engineer who designed and planned the lifting operation, has determined from the plans that if there is a loss of support at any jack location, that loss will be confined to that location and the structure as a whole will remain stable.

(a) Under no circumstances, shall any employee who is not essential to the jacking operation be permitted immediately beneath a slab while it is being lifted.

(b) For the purpose of subsection (11) of this section, a jacking operation begins when a slab or group of slabs is lifted and ends when such slabs are secured (with either temporary connections or permanent connections).

(c) Employers who comply with Appendix A to WAC 296-155-694 shall be considered to be in compliance with the provisions of subsections (11) through (11)(c) of this section.

(12) When making temporary connections to support slabs, wedges shall be secured by tack welding, or an equivalent method of securing the wedges to prevent them from falling out of position. Lifting rods may not be released until the wedges at that column have been secured.

(13) All welding on temporary and permanent connections shall be performed by a certified welder, familiar with the welding requirements specified in the plans and specifications for the lift-slab operation.

(14) Load transfer from jack/lifting units to building columns shall not be executed unit the welds on the column shear plates (weld blocks) are cooled to air temperature.

(15) Jacks/lifting units shall be positively secured to building columns so that they do not become dislodged or dislocated.

(16) Equipment shall be designed and installed so that the lifting rods cannot slip out of position or the employer shall institute other measures, such as the use of locking or blocking devices, which will provide positive connection between the lifting rods and attachments and will prevent components from disengaging during lifting operations.

Appendix to WAC 296-155-694—Lift-slab operations

(This appendix is nonmandatory.)

In WAC 296-155-694(11), WISHA requires employees to be removed from the building/structure during jacking operations unless an independent registered professional engineer, other than the engineer who designed and planned the lifting operation, has determined that the building/structure has been sufficiently reinforced to insure the integrity of the building/structure. One method to comply with this provision is for the employer to ensure that continuous bottom steel is provided in every slab and in both directions through every wall or column head area. (Column head area means the distance between lines that are one and one half times the thickness of the slab or drop panel. These lines are located outside opposite faces of the outer edges of the shearhead sections—See Figure 1.) The amount of bottom steel shall be established by assuming loss of support at a given lifting jack and then determining the steel necessary to carry, by catenary action over the span between surrounding supports, the slab service dead load plus any service dead and live loads likely to be acting on the slab during jacking. In addition, the surrounding supports must be capable of resisting any additional load transferred to them as a result of the loss of support at the lifting jack considered.

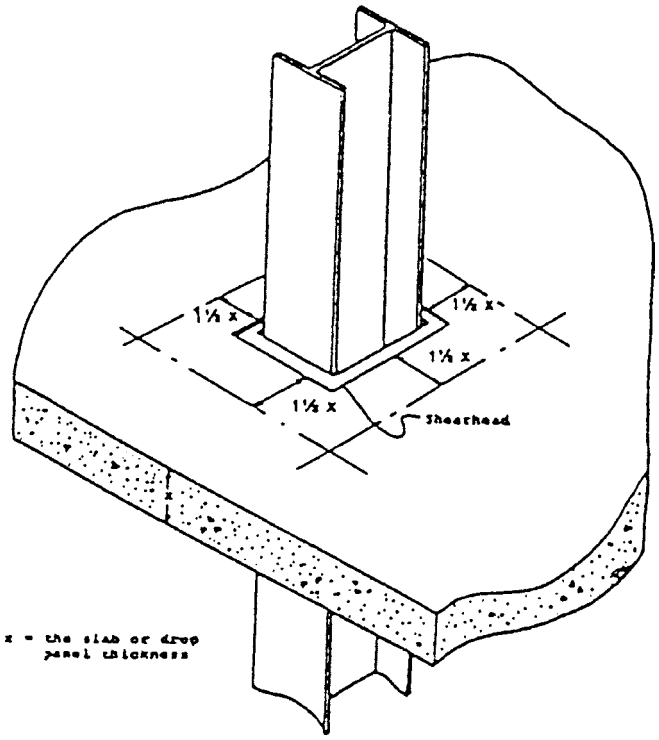

Figure 1—Column Head Area

[Statutory Authority: Chapter 49.17 RCW and RCW 49.17.040, [49.17].050 and [49.17].060. 92-22-067 (Order 92-06), § 296-155-694, filed 10/30/92, effective 12/8/92. Statutory Authority: Chapter 49.17 RCW. 91-11-070 (Order 91-01), § 296-155-694, filed 5/20/91, effective 6/20/91; 90-03-029 (Order 89-20), § 296-155-694, filed 1/11/90, effective 2/26/90; 89-11-035 (Order 89-03), § 296-155-694, filed 5/15/89, effective 6/30/89.]

WAC 296-155-695 Miscellaneous concrete construction. (1) General provisions.

(a) Deadheads used in post tensioning of tendons shall be the type that will increase the grip on the cable as the tension is increased.

(b) Proper means and equipment shall be used to prevent the over-tensioning of the tendons.

(c) Only qualified workers shall perform this type work.

(2) Prestressed and poststressed concrete operations.

(a) Anchor fitting. In utilizing anchor fittings for tensioned strands, the recommendations and instructions of the supplier concerning installation, maintenance, and replacement shall be followed.

(b) Tools and strand vices shall be kept clean and in good repair.

(c) Safety factor.

(i) Expendable strand deflection devices used to pretension concrete members shall have a minimum safety factor of two.

(ii) Reusable strand deflection devices shall have a minimum safety factor of three.

(d) Jacking operations.

(i) During jacking operations of any tensioning element or group of tensioning elements, the anchors shall be kept turned up close to the anchorplate.

(ii) No one shall be permitted to stand in line or directly over the jacking equipment during tensioning operations.

(iii) Employees shall not stand behind the jack during tensioning operations.

(e) Jacking and pulling equipment. Pulling headers, bolts, and hydraulic rams shall be frequently inspected for indication of fatigue, and the threads on bolts and nuts inspected for diminishing cross section.

(f) Storage. Stressed members shall be stored on a level base and adequately supported during storage and transportation to prevent tipping.

(g) Rigging.

(i) Stressed members shall be handled at pick points specifically designated on the manufacturer's drawings.

(ii) Stressed members shall be lifted with lifting devices recommended by the manufacturer or the engineer in charge.

(iii) No one shall be allowed under stressed members during lifting and erection.

[Statutory Authority: Chapter 49.17 RCW. 89-11-035 (Order 89-03), § 296-155-695, filed 5/15/89, effective 6/30/89. Statutory Authority: RCW 49.17.040 and 49.17.050. 86-03-074 (Order 86-14), § 296-155-695, filed 1/21/86; Order 74-26, § 296-155-695, filed 5/7/74, effective 6/6/74.]

WAC 296-155-697 Requirements for masonry construction. (1) A limited access zone shall be established whenever a masonry wall is being constructed. The limited access zone shall conform to the following:

(2) The limited access zone shall be established prior to the start of construction of the wall.

(3) The limited access zone shall be equal to the height of the wall to be constructed plus four feet, and shall run the entire length of the wall.

(4) The limited access zone shall be established on the side of the wall which will be unscaffolded.

(5) The limited access zone shall be restricted to entry by employees actively engaged in constructing the wall. No other employees shall be permitted to enter the zone.

(6) The limited access zone shall remain in place until the wall is adequately supported to prevent overturning and to prevent collapse unless the height of wall is over eight feet, in which case, the limited access zone shall remain in place until the requirements of subsection (7) of this section have been met.

(7) All masonry walls over eight feet in height shall be adequately braced to prevent overturning and to prevent collapse unless the wall is adequately supported so that it will not overturn or collapse. The bracing shall remain in place until permanent supporting elements of the structure are in place.

(8) Employees engaged in cutting or chipping shall wear suitable eye protection in accordance with WAC 296-155-215.

(9) Masonry saws shall be constructed, guarded and operated in accordance with WAC 296-155-367 (1) through (4).

(10) Persons charged with operation of derricks used for stone setting shall be qualified in that type of work.

(11) Stone shall be set directly on the wall by the derrick.

(12) Breast derricks when used in setting stone shall be secured against a slip or kick back and guyed with wire cables. Provide hold down line to prevent derrick from falling back.

(13) Stone cutters shall wear goggles while trimming stone or cutting holes.

(14) Pins shall be tested for security before stone is hoisted.

(15) Hoisting cables shall be protected from chafing and wearing over corners.

(16) Mason's mortar mixers shall have a bar-type grill installed over the mixer opening. The guard shall be installed with an automatic disconnect switch to stop the mixer tub rotation and prevent the mixer from starting whenever the guard is not in place.

[Statutory Authority: Chapter 49.17 RCW. 90-17-051 (Order 90-10), § 296-155-697, filed 8/13/90, effective 9/24/90; 90-03-029 (Order 89-20), § 296-155-697, filed 1/11/90, effective 2/26/90; 89-11-035 (Order 89-03), § 296-155-697, filed 5/15/89, effective 6/30/89.]

WAC 296-155-699 Appendix A to Part O—References to Part O of chapter 296-155 WAC. (This Appendix is nonmandatory.)

The following nonmandatory references provide information which can be helpful in understanding and complying with the requirements contained in Part O.

• Accident Prevention Manual for Industrial Operations; Eighth Edition; National Safety Council.

• Building Code Requirements for Reinforced Concrete (ACI 318-83).

• Formwork for Concrete (ACI SP-4).

• Recommended Practice for Concrete Formwork (ACI 347-78).

• Safety Requirements for Concrete and Masonry Work (ANSI A10.9-1983).

• Standard Test Method for Compressive Strength of Cylindrical Concrete Specimens (ASTM C39-86).

• Standard Test Method for Making and Curing Concrete Test Specimens in the Field (ASTM C31-85).

• Standard Test Method for Penetration Resistance of Hardened Concrete (ASTM C803-82).

• Standard Test Method for Compressive Strength of Concrete Cylinders Cast In-Place in Cylindrical Molds (ASTM C873-85).

• Standard Method for Developing Early Age Compressive Test Values and Projecting Later Age Strengths (ASTM C918-80).

• Recommended Practice for Inspection and Testing Agencies for Concrete, Steel and Bituminous Materials as Used in Construction (ASTM E329-77).

• Method of Making and Curing Concrete Test Specimens in the Laboratory (ASTM C192-88).

• Methods of Obtaining and Testing Drilled Cores and Sawed Beams of Concrete (ASTM C42-87).

• Methods of Securing, Preparing and Testing Specimens from Hardened Lightweight Insulating Concrete for Compressive Strength (ASTM C513-86).

• Test Method for Comprehensive Strength of Lightweight Insulating Concrete (ASTM C495-86).

• Method of Making, Accelerating Curing, and Testing of Concrete Compression Test Specimens (ASTM C684-81).

• Test Method for Compressive Strength of Concrete Using Portions of Beams Broken in Flexure (ASTM C116-68 (1980)).

[Statutory Authority: Chapter 49.17 RCW. 94-15-096 (Order 94-07), § 296-155-699, filed 7/20/94, effective 9/20/94; 89-11-035 (Order 89-03), § 296-155-699, filed 5/15/89, effective 6/30/89.]

PART P
STEEL ERECTION

WAC 296-155-701 Scope. (1)(a) This part applies to employers involved in the construction, alteration and repair of single or multistory buildings, bridges, and a variety of other structures. This part applies to employers involved in steel erection unless specifically excluded.

(b) Examples of steel erection structures include, but are not limited to:

Aerialways;	Aerospace facilities and structures;
Air and cable supported structures;	Amphitheaters;
Amusement park structures and rides;	Aqueducts;
Artistic and monumental structures;	Atriums;
Auditoriums;	Balconies;
Billboards;	Bins;
Bridges;	Canopies;
Car dumpers;	Catwalks;
Chemical process structures;	Conveyor supports and related framing;
Conveyor systems;	Cranes and craneways;
Curtain walls;	Draft curtains;
Elevator fronts;	Energy exploration structures;
Energy production, transfer and storage structures and facilities;	Entrances;
Fire containment structures;	Fire escapes;
Furnaces;	Geodesic domes;
Hi-bay structures;	Hoppers;
Industrial structures;	Lift slab/tilt-up structures;
Light towers;	Malls;
Metal roofs;	Mills;
Monorails;	Ovens;
Overpasses;	Penthouses;
Platforms;	Power plants;
Racks and rack support structures and frames;	Radar and communication structures;
Rail, marine and other transportation structures;	Scoreboards;
Signage;	Single and multistory buildings;
Skylights;	Sound barriers;
Space frames;	Stackers/reclaimers;
Stacks;	Stadiums;
Stair towers;	Stairways;
Store fronts;	Systems-engineered metal buildings;
Trestles;	Underpasses;
Viaducts;	Water process and water containment structures; and
Window walls.	

(2)(a) Covered steel erection work includes the:

■ Hoisting, laying out, placing, connecting, welding, burning, guying, bracing, bolting, plumbing and rigging of structural steel, steel joists, and metal buildings; and

■ Installing metal decking, curtain walls, window walls, siding systems, miscellaneous metals, ornamental iron and similar materials.

(b) The following work is also covered by this part when done during, and are a part of, steel erection work:

Anchoring devices;	Building equipment;
Building specialties;	Cable stays;
Castings;	Cold formed steel framing;
Column covers;	Conveying systems;
Crane rails and accessories;	Detention or security equipment and doors, windows and hardware;

Doors; windows;	Elevator beams;
Enclosures and pockets;	Falsework for temporary supports of permanent steel members;
Fascias;	Fences and gates;
Ferrous metals and alloys;	Floor plates;
Gaskets;	Glass;
Gratings;	Grillage;
Handrails;	Hardware;
Hydraulic structures;	Joint fillers;
Ladders;	Louvers;
Metal decking and raceway systems and accessories;	Metal panels and panel wall systems;
Metal roofing and accessories;	Metal siding; bridge flooring;
Miscellaneous, architectural and ornamental metals and metal work;	Multipurpose supports;
Nonferrous metals and alloys;	Ornamental iron work, expansion control including bridge expansion joint assemblies;
Penthouse enclosures;	Perforated metals;
Permanent and temporary bents and towers;	Plastics and synthetic composite materials;
Railings;	Rigging, hoisting, laying out, placing, connecting, guying, bracing, dismantling, burning, welding, bolting, grinding, sealing, caulking, and all related activities for construction, alteration and/or repair of materials and assemblies such as structural steel;
Safety systems for steel erection;	Sealants and seals;
Sheet metal fabrications;	Shelf racks;
Skylights;	Slide bearings;
Soffit panels;	Stairs;
Steel and metal joists;	Stone and other nonprecast concrete architectural materials mounted on steel frames;
Structural cabling;	Structural metal framing and related bracing and assemblies; and
Trench covers.	

(3) Controlling contractor duties are specified in WAC 296-155-703 (1) and (3), 296-155-707 (2)(b), 296-155-714(2), and 296-155-716(5).

[Statutory Authority: RCW 49.17.010, [49.17].040, and [49.17].050. 02-13-115, § 296-155-701, filed 6/19/02, effective 9/1/02.]

WAC 296-155-702 Definitions. Anchored bridging means that the steel joist bridging is connected to a bridging terminus point.

Bolted diagonal bridging means diagonal bridging that is bolted to a steel joist or joists.

Bridging clip means a device that is attached to the steel joist to allow the bolting of the bridging to the steel joist.

Bridging terminus point means a wall, a beam, tandem joists (with all bridging installed and a horizontal truss in the plane of the top chord) or other element at an end or intermediate point(s) of a line of bridging that provides an anchor point for the steel joist bridging.

Choker means a wire rope or synthetic fiber rigging assembly that is used to attach a load to a hoisting device.

Cold forming means the process of using press brakes, rolls, or other methods to shape steel into desired cross sections at room temperature.

Column means a load-carrying vertical member that is part of the primary skeletal framing system. Columns do not include posts.

Competent person (also defined in WAC 296-155-012) means one who can identify existing or predictable hazards in the surroundings or working conditions which are unsanitary, hazardous, or dangerous to employees, and who has authorization or authority by nature of their position to take prompt corrective measures to eliminate them. The person must be knowledgeable of the requirements of this part.

Connector means someone who, working with hoisting equipment, is placing and connecting structural members and/or components.

Constructibility means the ability to erect structural steel members in accordance with this part without having to alter the overall structural design.

Construction load (for joist erection) means any load other than the weight of the employee(s), the joists and the bridging bundle.

Controlled load-lowering means lowering a load by means of a mechanical hoist drum device that allows a load to be lowered with maximum control using the gear train or hydraulic components of the hoist mechanism. Controlled load lowering requires the use of the hoist drive motor, rather than the load hoist brake, to lower the load.

Controlling contractor means a prime contractor, general contractor, construction manager or any other legal entity that has the overall responsibility for the construction of the project—its planning, quality and completion.

Critical lift means a lift that:

■ Exceeds seventy-five percent of the crane or derrick rated load chart capacity; or

■ Requires the use of more than one crane or derrick.

Derrick floor means an elevated floor of a building or structure that has been designated to receive hoisted pieces of steel prior to final placement.

Double connection means an attachment method where the connection point is intended for two pieces of steel that share common bolts on either side of a central piece.

Double connection seat means a structural attachment that, during the installation of a double connection, supports the first member while the second member is connected.

Employee (and other terms of like meaning, unless the context of the provision containing such a term indicates otherwise) means an employee of an employer who is employed in the business of his or her employer whether by way of manual labor or otherwise and every person in this state who is engaged in the employment of or who is working under an independent contract the essence of which is personal labor for an employer under this standard whether by way of manual labor or otherwise.

Employer means any person, firm, corporation, partnership, business trust, legal representative, or other business entity which engages in any business, industry, profession, or activity in this state and employs one or more employees or who contracts with one or more persons, the essence of which is the personal labor of such person or persons and includes the state, counties, cities, and all municipal corporations, public corporations, political subdivisions of the state, and charitable organizations: Provided, That any persons, partnership, or business entity not having employees, and who is covered by the Industrial Insurance Act must be considered both an employer and an employee.

Erection bridging means the bolted diagonal bridging that is required to be installed prior to releasing the hoisting cables from the steel joists.

Final interior perimeter means the perimeter of a large permanent open space within a building such as an atrium or courtyard. This does not include openings for stairways, elevator shafts, etc.

Floor hole (decking hole) means an opening measuring less than twelve inches but more than one inch in its least dimension in any floor, roof, or platform through which materials but not persons may fall, such as a belt hole, pipe opening, or slot opening.

Girt (in systems-engineered metal buildings) means a "Z" or "C" shaped member formed from sheet steel spanning between primary framing and supporting wall material.

Headache ball means a weighted hook that is used to attach loads to the hoist load line of the crane.

Hoisting equipment means lifting equipment designed to lift and position a load of known weight to a location at some known elevation and horizontal distance from the equipment's center of rotation. Hoisting equipment includes, but not limited to:

- Cranes;
- Derricks;
- Tower cranes;
- Barge-mounted derricks or cranes;
- Gin poles; and
- Gantry hoist systems.

Note: A come-a-long (a mechanical device, usually consisting of a chain or cable attached at each end, that is used to facilitate movement of materials through leverage) is not considered hoisting equipment.

Metal decking means a commercially manufactured, structural grade, cold rolled metal panel formed into a series of parallel ribs and includes metal floor and roof decks, standing seam metal roofs, other metal roof systems and other products such as bar gratings, checker plate, expanded metal panels, and similar products. After installation and proper fastening, these decking materials serve a combination of functions including: A structural element designed in combination with the structure to resist, distribute and transfer loads, stiffen the structure and provide a diaphragm action; a walking/working surface; a form for concrete slabs; a support for roofing systems; and a finished floor or roof.

Multiple lift rigging means a rigging assembly manufactured by wire rope rigging suppliers that facilitates the attachment of up to five independent loads to the hoist rigging of a crane.

Must means mandatory.

Permanent floor means a structurally completed floor at any level or elevation (including slab on grade).

Post means a structural member with a longitudinal axis that is essentially vertical, that:

• Weighs three hundred pounds or less and is axially loaded (a load presses down on the top end); or

• Is not axially loaded, but is laterally restrained by the above member. Posts typically support stair landings, wall framing, mezzanines and other substructures.

Project structural engineer of record means the registered, licensed professional responsible for the design of structural steel framing and whose seal appears on the structural contract documents.

Purlin (in systems-engineered metal buildings) means a "Z," "C," or "W" shaped member formed from sheet steel spanning between primary framing and supporting roof material.

Qualified person means one who, by possession of a recognized degree, certificate, or professional standing, or who by extensive knowledge, training, and experience, has successfully demonstrated the ability to solve or resolve problems relating to the subject matter, the work, or the project.

Safety deck attachment means an initial attachment that is used to secure an initially placed sheet of decking to keep proper alignment and bearing with structural support members.

Shear connector means headed steel studs, steel bars, steel lugs, and similar devices which are attached to a structural member for the purpose of achieving composite action with concrete.

Steel erection means the construction, alteration or repair of steel buildings, bridges and other structures, including the installation of metal decking and all planking used during the process of erection.

Steel joist means an open web, secondary load-carrying member of one hundred forty-four feet (43.9 m) or less, designed by the manufacturer, used for the support of floors and roofs. This does not include structural steel trusses or cold-formed joists.

Steel joist girder means an open web, primary load-carrying member, designed by the manufacturer, used for the support of floors and roofs. This does not include structural steel trusses.

Steel truss means an open web member designed of structural steel components by the project structural engineer of record. For the purposes of this subpart, a steel truss is considered equivalent to a solid web structural member.

Structural steel means a steel member, or a member made of a substitute material (such as, but not limited to, fiberglass, aluminum or composite members). These members include, but are not limited to, steel joists, joist girders, purlins, columns, beams, trusses, splices, seats, metal decking, girts, and all bridging, and cold formed metal framing which is integrated with the structural steel framing of a building.

Systems-engineered metal building means a metal, field-assembled building system consisting of framing, roof and wall coverings. Typically, many of these components are cold-formed shapes. These individual parts are fabricated in one or more manufacturing facilities and shipped to the job site for assembly into the final structure. The engineering design of the system is normally the responsibility of the systems-engineered metal building manufacturer.

Tank means a container for holding gases, liquids or solids.

You means the employer.

[Statutory Authority: RCW 49.17.010, [49.17].040, and [49.17].050. 02-13-115, § 296-155-702, filed 6/19/02, effective 9/1/02.]

WAC 296-155-703 Site layout, site-specific erection plan and construction sequence. (1) Before steel erection work can start the controlling contractor must ensure the steel erector is provided written notifications that:

(a) The concrete in the footings, piers and walls and the mortar in the masonry piers and walls has attained either:

• Seventy-five percent of the intended minimum compressive design strength; or

• Sufficient strength to support the loads imposed during steel erection.

The basis of these measurements is the appropriate ASTM standard test method of field cured samples.

(b) Any repairs, replacements and modifications to the anchor bolts were done per WAC 296-155-707(2).

(2) The steel erector must receive written notice that the concrete in the footings, piers and walls or the mortar in the masonry piers and walls has attained, on the basis of an appropriate ASTM standard test method of field-cured samples, either seventy-five percent of the intended minimum compressive design strength or sufficient strength to support the loads imposed during steel erection.

(3) **Site layout.** The controlling contractor must ensure that the following is provided and maintained:

(a) Adequate access roads into and through the site for the safe delivery and movement of derricks, cranes, trucks, other necessary equipment, and the material to be erected and means and methods for pedestrian and vehicular control.

Exception: This requirement does not apply to roads outside the construction site.

(b) A firm, properly graded, drained area, readily accessible to the work with adequate space for the safe storage of materials and the safe operation of the erector's equipment.

(4) **Preplanning of overhead hoisting operations.** All hoisting operations in steel erection must be preplanned to ensure that the requirements of WAC 296-155-704(4) are met.

(5) **Site-specific erection plan.** Where employers elect, due to conditions specific to the site, to develop alternate means and methods that provide employee protection in accordance with WAC 296-155-704 (3)(e), 296-155-709 (1)(d) or (5)(d), a site-specific erection plan must be developed by a qualified person and be available at the worksite. Guidelines for establishing a site-specific erection plan are contained in Appendix A to this part.

(6) Steel erection must be done under the supervision of a competent person who is present at the worksite.

[Statutory Authority: RCW 49.17.010, [49.17].040, and [49.17].050. 02-13-115, § 296-155-703, filed 6/19/02, effective 9/1/02.]

WAC 296-155-704 Hoisting and rigging. (1) All the provisions of WAC 296-155-525 and 296-155-526 apply to hoisting and rigging.

(2) In addition, subsections (3) through (5) of this section apply regarding the hazards associated with hoisting and rigging.

(3) **General.**

(a) Crane preshift visual inspection.

(i) Cranes being used in steel erection activities must be visually inspected prior to each shift by a competent person. The inspection must include observation for deficiencies during operation and, as a minimum, must include:

• All control mechanisms for maladjustments;

• Control and drive mechanism for excessive wear of components and contamination by lubricants, water or other foreign matter;

• Safety devices, including boom angle indicators, boom stops, boom kick out devices, anti-two block devices, and load movement indicators where required;

• Air, hydraulic, and other pressurized lines for deterioration or leakage, particularly those which flex in normal operation;

• Hooks and latches for deformation, chemical damage, cracks, or wear;

• Wire rope reeving for compliance with hoisting equipment manufacturer's specifications;

• Electrical apparatus for malfunctioning, signs of excessive deterioration, dirt, or moisture accumulation;

• Hydraulic system for proper fluid level;

• Tires for proper inflation and condition;

• Ground conditions around the hoisting equipment for proper support, including ground settling under and around outriggers, ground water accumulation, or similar conditions;

• The hoisting equipment for level position; and

• The hoisting equipment for level position after each move and setup.

(ii) If any deficiency is identified, an immediate determination must be made by the competent person if the deficiency constitutes a hazard.

(iii) If the deficiency constitutes a hazard, the hoisting equipment must be removed from service until the deficiency has been corrected.

(iv) The operator is responsible for those operations under their direct control. Whenever there is any doubt as to safety, the operator must have the authority to stop and refuse to handle loads until safety has been assured.

(b) A qualified rigger (a rigger who is also a qualified person) must inspect the rigging prior to each shift in accordance with WAC 296-155-330.

(c) The headache ball, hook or load must not be used to transport personnel, except as provided in (d) of this subsection.

(d) Cranes or derricks may be used to hoist employees on a personnel platform when work under this part is being conducted if all the provisions of WAC 296-155-525 through 296-155-528 are met.

(e) Safety latches on hooks must not be deactivated or made inoperable except:

(i) When a qualified rigger has determined that the hoisting and placing of purlins and single joists can be performed more safely by doing so; or

(ii) When equivalent protection is provided in a site-specific erection plan.

(4) **Working under loads.**

(a) Routes for suspended loads must be preplanned to ensure that no employee works directly below a suspended load except when:

(i) Engaged in the initial connection of the steel; or

(ii) Necessary for the hooking or unhooking of the load.

(b) When working under suspended loads, the following criteria must be met:

(i) Materials being hoisted must be rigged to prevent unintentional displacement;

(ii) Hooks with self-closing safety latches or their equivalent must be used to prevent components from slipping out of the hook; and

(iii) All loads must be rigged by a qualified rigger.

(5) **Multiple lift rigging procedure.**

(a) A multiple lift must only be performed if the following criteria are met:

• A multiple lift rigging assembly is used;

• A multiple lift is only permitted when specifically within the manufacturer's specifications and limitations;

• A maximum of five members are hoisted per lift;

Exception: Bundles of decking must not be lifted using the multiple lift rigging procedure, even though they meet the definition of structural members in WAC 296-155-702.

• Only beams and similar structural members are lifted; and

• All employees engaged in the multiple lift have been trained in these procedures in accordance with WAC 296-155-717 (3)(a).

(b) Components of the multiple lift rigging assembly must be specifically designed and assembled with a maximum capacity for total assembly and for each individual attachment point. This capacity, certified by the manufacturer or a qualified rigger, must be based on the manufacturer's specifications with a five to one safety factor for all components.

(c) The total load must not exceed:

• The rated capacity of the hoisting equipment specified in the hoisting equipment load charts; and

• The rigging capacity specified in the rigging-rating chart.

(d) The multiple lift rigging assembly must be rigged with members:

• Attached at their center of gravity and maintained reasonably level;

• Rigged from top down; and

• Rigged at least seven feet (2.1 m) apart.

(e) The members on the multiple lift rigging assembly must be set from the bottom up.

(f) Controlled load lowering must be used whenever the load is over the connectors.

[Statutory Authority: RCW 49.17.010, [49.17].040, and [49.17].050. 02-13-115, § 296-155-704, filed 6/19/02, effective 9/1/02.]

WAC 296-155-706 Structural steel assembly. (1) Structural stability must be maintained at all times during the erection process.

• Make sure that multistory structures have the following:

– Permanent floors installed as the erection of structural members progress;

– No more than eight stories between the erection floor and the upper-most permanent floor; and

– No more than four floors or forty-eight feet (14.6 m), whichever is less, of unfinished bolting or welding above the foundation or uppermost permanent secured floor.

Exception: The above applies except where the structural integrity is maintained as a result of design.

(2) **Walking/working surfaces.**

(a) Shear connectors and other similar devices.

(i) Shear connectors, reinforcing bars, deformed anchors or threaded studs must not be attached to the top flanges of beams, joists or beam attachments so they project vertically from or horizontally across the top flange of the member until after the metal decking, or other walking/working surface has been installed. This becomes a tripping hazard. Examples of shear connectors are headed steel studs, steel bars or steel lugs.

(ii) Installation of shear connectors on composite floors. When shear connectors are used in construction of composite floors, roofs and bridge decks, employees must lay out and install the shear connectors after the metal decking has been installed, using the metal decking as a working platform.

(b) Slip resistance of metal decking. (Reserved.)

(c) Workers must not be permitted to walk the top surface of any structural steel member installed after July 18, 2006, that has been coated with paint or similar material. Except when documentation or certification is provided that the coating has achieved a minimum average slip resistance of .50 when measured with an English XL tribometer or equivalent tester on a wetted surface at a testing laboratory is provided. Such documentation or certification must be based on the appropriate ASTM standard test method conducted by a laboratory capable of performing the test. The results must be available at the site and to the steel erector. (Appendix B to this part references appropriate ASTM standard test methods that may be used to comply with this requirement.)

(d) Safe access must be provided to the working level. Employees must not slide down ropes, columns, or ladders.

(3) **Plumbing-up.**

(a) When deemed necessary by a competent person, plumbing-up equipment must be installed in conjunction with the steel erection process to ensure the stability of the structure.

(b) When used, plumbing-up equipment must be in place and properly installed before the structure is loaded with construction material such as loads of joists, bundles of decking or bundles of bridging.

(c) Plumbing-up equipment must be removed only with the approval of a competent person.

(4) **Metal decking.**

(a) Hoisting, landing and placing of metal decking bundles.

(i) Bundle packaging and strapping must not be used for hoisting unless specifically designed for that purpose.

(ii) If loose items such as dunnage, flashing, or other materials are placed on the top of metal decking bundles to be hoisted, such items must be secured to the bundles.

(iii) Bundles of metal decking on joists must be landed in accordance with WAC 296-155-709 (5)(d).

(iv) Metal decking bundles must be landed on framing members so that enough support is provided to allow the bundles to be unbanded without dislodging the bundles from the supports.

(v) At the end of the shift or when environmental or job site conditions require, metal decking must be secured against displacement.

(b) Roof and floor holes and openings. Metal decking at roof and floor holes and openings must be installed as follows:

(i) Framed metal deck openings must have structural members turned down to allow continuous deck installation except where not allowed by structural design constraints or constructibility.

(ii) Roof and floor holes and openings must be decked over. Where large size, configuration or other structural design does not allow openings to be decked over (such as elevator shafts, stair wells, etc.) employees must be protected in accordance with chapter 296-155 WAC, Part C-1 or Part K.

(iii) Metal decking holes and openings must not be cut until immediately prior to being permanently filled with the equipment or structure needed or intended to fulfill its specific use and which meets the strength requirements of (c) of this subsection, or must be immediately covered.

(c) **Covering roof and floor openings.** Smoke dome or skylight fixtures that have been installed are not considered covers for the purpose of this section unless they meet the strength requirements of WAC 296-155-505 (4)(g) (Part K).

(d) **Decking gaps around columns.** Wire mesh, exterior plywood, or equivalent, must be installed around columns where planks or metal decking do not fit tightly. The materials used must be of sufficient strength to provide fall protection for personnel and prevent objects from falling through.

(e) **Installation of metal decking.**

(i) Metal decking must be laid tightly and immediately secured upon placement to prevent accidental movement or displacement.

(ii) During initial placement, metal decking panels must be placed to ensure full support by structural members.

(f) **Derrick floors.**

(i) A derrick floor must be fully decked and or planked and the steel member connections completed to support the intended floor loading.

(ii) Temporary loads placed on a derrick floor must be distributed over the underlying support members so as to prevent local overloading of the deck material.

[Statutory Authority: RCW 49.17.010, [49.17].040, and [49.17].050. 02-13-115, § 296-155-706, filed 6/19/02, effective 9/1/02.]

WAC 296-155-707 Column anchorage. (1) **General requirements for erection stability.**

(a) All columns must be anchored by a minimum of four anchor rods (anchor bolts).

(b) Each column anchor rod (anchor bolt) assembly, including the column-to-base plate weld and the column foundation, must be designed to resist a minimum eccentric gravity load of three hundred pounds (136.2 kg) located eighteen inches (.46 m) from the extreme outer face of the column in each direction at the top of the column shaft.

(c) Columns must be set on level finished floors, pre-grouted leveling plates, leveling nuts, or shim packs which are adequate to transfer the construction loads.

(d) All columns must be evaluated by a competent person to determine whether guying or bracing is needed; if guying or bracing is needed, it must be installed.

(2) **Repair, replacement or field modification of anchor rods (anchor bolts).**

(a) Anchor rods (anchor bolts) must not be repaired, replaced or field-modified without the approval of the project structural engineer of record.

(b) Prior to the erection of a column, the controlling contractor must provide written notification to the steel erector if there has been any repair, replacement or modification of the anchor rods (anchor bolts) of that column.

[Statutory Authority: RCW 49.17.010, [49.17].040, and [49.17].050. 02-13-115, § 296-155-707, filed 6/19/02, effective 9/1/02.]

WAC 296-155-708 Beams and columns. (1) **General.**

(a) During the final placing of solid web structural members, the load must not be released from the hoisting line until the members are secured with at least two bolts per connection. These bolts must be of the same size and strength as shown in the erection drawings, drawn up wrench-tight or the equivalent as specified by the project structural engineer of record.

Exception: See subsection (2) of this section.

(b) A competent person must determine if more than two bolts are necessary to ensure the stability of cantilevered members; if additional bolts are needed, they must be installed.

(2) **Diagonal bracing.** Solid web structural members used as diagonal bracing must be secured by at least one bolt per connection drawn up wrench-tight or the equivalent as specified by the project structural engineer of record.

(3)(a) **Double connections at columns and/or at beam webs over a column.** When two structural members on opposite sides of a column web, or a beam web over a column, are connected sharing common connection holes, at least one bolt with its wrench-tight nut must remain connected to the first member unless a shop-attached or field-attached seat or equivalent connection device is supplied with the member to secure the first member and prevent the column from being displaced (see Appendix E to this part for examples of equivalent connection devices).

(b) If a seat or equivalent device is used, the seat (or device) must be designed to support the load during the double connection process. It must be adequately bolted or welded to both a supporting member and the first member before the nuts on the shared bolts are removed to make the double connection.

(4) **Column splices.** Each column splice must be designed to resist a minimum eccentric gravity load of three hundred pounds (136.2 kg) located eighteen inches (.46 m) from the extreme outer face of the column in each direction at the top of the column shaft.

(5) **Perimeter columns.** Perimeter columns must not be erected unless:

(a) The perimeter columns extend a minimum of forty-eight inches (1.2 m) above the finished floor to permit installation of perimeter safety cables prior to erection of the next tier, except where constructibility does not allow (see Appendix D to this part);

(b) The perimeter columns have holes or other devices in or attached to perimeter columns at forty-two to forty-five inches (107-114 cm) above the finished floor and the midpoint between the finished floor and the top cable to permit installation of perimeter safety cables required by WAC 296-155-716 (1)(b), except where constructibility does not allow. (See Appendix D to this part.)

[Statutory Authority: RCW 49.17.010, [49.17].040, and [49.17].050. 02-13-115, § 296-155-708, filed 6/19/02, effective 9/1/02.]

WAC 296-155-709 Open web steel joists. (1) **General.**

(a) Where steel joists are used and columns are not framed in at least two directions with solid web structural steel members, a steel joist must be field-bolted at the column to provide lateral stability to the column during erection.

Exception: See (b) of this subsection. For the installation of this joist:
(i) A vertical stabilizer plate must be provided on each column for steel joists. The plate must be a minimum of six inch by six inch (152 mm by 152 mm) and must extend at least three inches (76 mm) below the bottom chord of the joist with a 13/16-inch (21 mm) hole to provide an attachment point for guying or plumbing cables.
(ii) The bottom chords of steel joists at columns must be stabilized to prevent rotation during erection.
(iii) Hoisting cables must not be released until the seat at each end of the steel joist is field-bolted, and each end of the bottom chord is restrained by the column stabilizer plate.

(b) Where constructibility does not allow a steel joist to be installed at the column:

(i) An alternate means of stabilizing joists must be installed on both sides near the column and must:

- Provide stability equivalent to (a) of this subsection;
- Be designed by a qualified person;
- Be shop installed; and
- Be included in the erection drawings.

(ii) Hoisting cables must not be released until the seat at each end of the steel joist is field-bolted and the joist is stabilized.

(c) Where steel joists at or near columns span sixty feet (18.3 m) or less, the joist must be designed with sufficient strength to allow one employee to release the hoisting cable without the need for erection bridging.

(d) Where steel joists at or near columns span more than sixty feet (18.3 m), the joists must be set in tandem with all bridging installed unless an alternative method of erection, which provides equivalent stability to the steel joist, is designed by a qualified person and is included in the site-specific erection plan.

(e) A steel joist or steel joist girder must not be placed on any support structure unless such structure is stabilized.

(f) When steel joist(s) are landed on a structure, they must be secured to prevent unintentional displacement prior to installation.

(g) No modification that affects the strength of a steel joist or steel joist girder must be made without the approval of the project structural engineer of record.

(h) Field-bolted joists.

(i) Except for steel joists that have been preassembled into panels, connections of individual steel joists to steel structures in bays of forty feet (12.2 m) or more must be fabricated to allow for field bolting during erection.

(ii) These connections must be field-bolted unless constructibility does not allow.

(i) Steel joists and steel joist girders must not be used as anchorage points for a fall arrest system unless written approval to do so is obtained from a qualified person.

(j) A bridging terminus point must be established before bridging is installed. (See Appendix E to this part.)

(2) **Attachment of steel joists and steel joist girders.**

(a) Each end of "K" series steel joists must be attached to the support structure with a minimum of two 1/8-inch (3 mm) fillet welds one inch (25 mm) long or with two 1/2-inch (13 mm) bolts, or the equivalent.

(b) Each end of "LH" and "DLH" series steel joists and steel joist girders must be attached to the support structure with a minimum of two 1/4-inch (6 mm) fillet welds two inches (51 mm) long, or with two 3/4-inch (19 mm) bolts, or the equivalent.

(c) Except as provided in (d) of this subsection, each steel joist must be attached to the support structure, at least at one end on both sides of the seat, immediately upon placement in the final erection position and before additional joists are placed.

(d) Panels that have been preassembled from steel joists with bridging must be attached to the structure at each corner before the hoisting cables are released.

(3) **Erection of steel joists.**

(a) Both sides of the seat of one end of each steel joist that requires bridging under Tables A and B must be attached to the support structure before hoisting cables are released.

(b) For joists over sixty feet, both ends of the joist must be attached as specified in subsections (2) and (4) of this section before the hoisting cables are released.

(c) On steel joists that do not require erection bridging under Tables A and B, only one employee must be allowed on the joist until all bridging is installed and anchored.

Table A—Erection of Bridging for Short Span Joists

Joist	Span		Joist	Span		Joist	Span
8L1	NM		22K10	40-0		14KCS1	NM
10K1	NM		22K11	40-0		14KCS2	NM
12K1	23-0		24K4	36-0		14KCS3	NM
12K3	NM		24K5	38-0		16KCS2	NM
12K5	NM		24K6	39-0		16KCS3	NM
14K1	27-0		24K7	43-0		16KCS4	NM
14K3	NM		24K8	43-0		16KCS5	NM
14K4	NM		24K9	44-0		18KCS2	35-0
14K6	NM		24K10	NM		18KCS3	NM
16K2	29-0		24K12	NM		18KCS4	NM
16K3	30-0		26K5	38-0		18KCS5	NM
16K4	32-0		26K6	39-0		20KCS2	36-0
16K5	32-0		26K7	43-0		20KCS3	39-0
16K6	NM		26K8	44-0		20KCS4	NM
16K7	NM		26K9	45-0		20KCS5	NM
16K9	NM		26K10	49-0		22KCS2	36-0
18K3	31-0		26K12	NM		22KCS3	40-0
18K4	32-0		28K6	40-0		22KCS4	NM
18K5	33-0		28K7	43-0		22KCS5	NM
18K6	35-0		28K8	44-0		24KCS2	39-0
18K7	NM		28K9	45-0		24KCS3	44-0
18K9	NM		28K10	49-0		24KCS4	NM
18K10	NM		28K12	53-0		24KCS5	NM
20K3	32-0		30K7	44-0		26KCS2	39-0
20K4	34-0		30K8	45-0		26KCS3	44-0
20K5	34-0		30K9	45-0		26KCS4	NM
20K6	36-0		30K10	50-0		26KCS5	NM
20K7	39-0		30K11	52-0		28KCS2	40-0
20K9	39-0		30K12	54-0		28KCS3	45-0
20K10	NM		10KCS1	NM		28KCS4	53-0
22K4	34-0		10KCS2	NM		28KCS5	53-0
22K5	35-0		10KCS3	NM		30KCS3	45-0
22K6	36-0		12KCS1	NM		30KCS4	54-0
22K7	40-0		12KCS2	NM		30KCS5	54-0
22K9	40-0		12KCS3	NM			

NM = Diagonal bolted bridging not mandatory for joists under 40 feet.

Table B—Erection Bridging for Long Span Joists

Joist	Span		Joist	Span
18LH02	33-0		28LH06	42-0
18LH03	NM		28LH07	NM
18LH04	NM		28LH08	NM

18LH05	NM		28LH09	NM
18LH06	NM		28LH10	NM
18LH07	NM		28LH11	NM
18LH08	NM		28LH12	NM
18LH09	NM		28LH13	NM
20LH02	33-0		32LH06	47-0 through 60-0
20LH03	38-0		32LH07	47-0 through 60-0
20LH04	NM		32LH08	55-0 through 60-0
20LH05	NM		32LH09	NM through 60-0
20LH06	NM		32LH10	NM through 60-0
20LH07	NM		32LH11	NM through 60-0
20LH08	NM		32LH12	NM through 60-0
20LH09	NM		32LH13	NM through 60-0
20LH10	NM		32LH14	NM through 60-0
24LH03	35-0		32LH15	NM through 60-0
24LH04	39-0		36LH07	47-0 through 60-0
24LH05	40-0		36LH08	47-0 through 60-0
24LH06	45-0		36LH09	57-0 through 60-0
24LH07	NM		36LH10	NM through 60-0
24LH08	NM		36LH11	NM through 60-0
24LH09	NM		36LH12	NM through 60-0
24LH10	NM		36LH13	NM through 60-0
24LH11	NM		36LH14	NM through 60-0
28LH05	42-0		36LH15	NM through 60-0

NM = Diagonal bolted bridging not mandatory for joists under 40 feet.

(d) Employees must not be allowed on steel joists where the span of the steel joist is equal to or greater than the span shown in Tables A and B except in accordance with WAC 296-155-709(4).

(e) When permanent bridging terminus points cannot be used during erection, additional temporary bridging terminus points are required to provide stability. (See Appendix E of this part.)

(4) **Erection bridging.**

(a) Where the span of the steel joist is equal to or greater than the span shown in Tables A and B, the following must apply:

(i) A row of bolted diagonal erection bridging must be installed near the midspan of the steel joist;

(ii) Hoisting cables must not be released until this bolted diagonal erection bridging is installed and anchored; and

(iii) No more than one employee must be allowed on these spans until all other bridging is installed and anchored.

(b) Where the span of the steel joist is over sixty feet (18.3 m) through one hundred feet (30.5 m), the following must apply:

(i) All rows of bridging must be bolted diagonal bridging;

(ii) Two rows of bolted diagonal erection bridging must be installed near the third points of the steel joist;

(iii) Hoisting cables must not be released until this bolted diagonal erection bridging is installed and anchored; and

(iv) No more than two employees must be allowed on these spans until all other bridging is installed and anchored.

(c) Where the span of the steel joist is over one hundred feet (30.5 m) through one hundred forty-four feet (43.9 m), the following must apply:

(i) All rows of bridging must be bolted diagonal bridging;

(ii) Hoisting cables must not be released until all bridging is installed and anchored; and

(iii) No more than two employees must be allowed on these spans until all bridging is installed and anchored.

(d) For steel members spanning over one hundred forty-four feet (43.9 m), the erection methods used must be in accordance with WAC 296-155-708.

(e) Where any steel joist specified in subsections (3)(b), (4)(a), (b), and (c) of this section is a bottom chord bearing joist, a row of bolted diagonal bridging must be provided near the support(s). This bridging must be installed and anchored before the hoisting cable(s) is released.

(f) When bolted diagonal erection bridging is required by this section, the following must apply:

(i) The bridging must be indicated on the erection drawing;

(ii) The erection drawing must be the exclusive indicator of the proper placement of this bridging;

(iii) Shop-installed bridging clips, or functional equivalents, must be used where the bridging bolts to the steel joists;

(iv) When two pieces of bridging are attached to the steel joist by a common bolt, the nut that secures the first piece of bridging must not be removed from the bolt for the attachment of the second; and

(v) Bridging attachments must not protrude above the top chord of the steel joist.

(5) **Landing and placing loads.**

(a) During the construction period, the employer placing a load on steel joists must ensure that the load is distributed so as not to exceed the carrying capacity of any steel joist.

(b) Except for (d) of this subsection, no construction loads are allowed on the steel joists until all bridging is installed and anchored and all joist-bearing ends are attached.

(c) The weight of a bundle of joist bridging must not exceed a total of one thousand pounds (454 kg). A bundle of joist bridging must be placed on a minimum of three steel joists that are secured at one end. The edge of the bridging bundle must be positioned within one foot (.30 m) of the secured end.

(d) No bundle of decking may be placed on steel joists until all bridging has been installed and anchored and all joist bearing ends attached, unless all of the following conditions are met:

(i) The employer has first determined from a qualified person and documented in a site-specific erection plan that the structure or portion of the structure is capable of supporting the load;

(ii) The bundle of decking is placed on a minimum of three steel joists;

(iii) The joists supporting the bundle of decking are attached at both ends;

(iv) At least one row of bridging is installed and anchored;

(v) The total weight of the bundle of decking does not exceed four thousand pounds (1816 kg); and

(vi) Placement of the bundle of decking must be in accordance with (e) of this subsection.

(e) The edge of the construction load must be placed within one foot (.30 m) of the bearing surface of the joist end.

[Statutory Authority: RCW 49.17.010, [49.17].040, and [49.17].050. 02-13-115, § 296-155-709, filed 6/19/02, effective 9/1/02.]

WAC 296-155-711 Systems-engineered metal buildings. (1) All of the requirements of this part apply to the erection of systems-engineered metal buildings except WAC

296-155-707 (column anchorage) and WAC 296-155-709 (open web steel joists).

(2) Each structural column must be anchored by a minimum of four anchor rods (anchor bolts).

(3) Rigid frames must have fifty percent of their bolts or the number of bolts specified by the manufacturer (whichever is greater) installed and tightened on both sides of the web adjacent to each flange before the hoisting equipment is released.

(4) Construction loads must not be placed on any structural steel framework unless such framework is safely bolted, welded or otherwise adequately secured.

(5) In girt and eave strut-to-frame connections, when girts or eave struts share common connection holes, at least one bolt with its wrench-tight nut must remain connected to the first member unless a manufacturer-supplied, field-attached seat or similar connection device is present to secure the first member so that the girt or eave strut is always secured against displacement.

(6) Both ends of all steel joists or cold-formed joists must be fully bolted and/or welded to the support structure before:

(a) Releasing the hoisting cables;

(b) Allowing an employee on the joists; or

(c) Allowing any construction loads on the joists.

(7) Purlins and girts must not be used as an anchorage point for a fall arrest system unless written approval is obtained from a qualified person.

(8) Purlins may only be used as a walking/working surface when installing safety systems, after all permanent bridging has been installed and fall protection is provided.

(9) Construction loads may be placed only within a zone that is within eight feet (2.5 m) of the center line of the primary support member.

[Statutory Authority: RCW 49.17.010, [49.17].040, and [49.17].050. 02-13-115, § 296-155-711, filed 6/19/02, effective 9/1/02.]

WAC 296-155-714 Falling object protection. (1) Securing loose items aloft. All materials, equipment, and tools, which are not in use while aloft, must be secured against accidental displacement.

(2) Protection from falling objects other than materials being hoisted. The controlling contractor must bar other construction processes below steel erection unless overhead protection for the employees below is provided.

[Statutory Authority: RCW 49.17.010, [49.17].040, and [49.17].050. 02-13-115, § 296-155-714, filed 6/19/02, effective 9/1/02.]

WAC 296-155-716 Fall protection. (1) **General requirements.**

(a) Fall protection will be in accordance with chapter 296-155 WAC, Parts C-1 and K.

(b) During steel erection activities, fall protection must be as required by chapter 296-155 WAC, Parts C-1 and K. Additionally, on multistory structures, perimeter safety cables must be installed at the final interior and exterior perimeters of the floors as soon as metal decking has been installed. See Appendix D.

(2) **Connectors.** Each connector must: Have completed connector training in accordance with WAC 296-155-717.

(3) **Custody of fall protection.** Fall protection provided by the steel erector must remain in the area where steel erection activity has been completed, to be used by other trades, only if the controlling contractor or its authorized representative:

(a) Has directed the steel erector to leave the fall protection in place; and

(b) Has inspected and accepted control and responsibility of the fall protection prior to authorizing persons other than steel erectors to work in the area.

[Statutory Authority: RCW 49.17.010, [49.17].040, and [49.17].050. 02-13-115, § 296-155-716, filed 6/19/02, effective 9/1/02.]

WAC 296-155-717 Training. (1) **Training personnel.** Training required by this section must be provided by a qualified person(s).

(2) **Fall hazard training.** The employer must provide a training program for all employees exposed to fall hazards as required by chapter 296-155 WAC, Part C-1.

(3) **Special training programs.** In addition to the training required in subsection (2) of this section, the employer must provide special training to employees engaged in the following activities:

(a) Multiple lift rigging procedure. The employer must ensure that each employee who performs multiple lift rigging has been provided training in the following areas:

(i) The nature of the hazards associated with multiple lifts; and

(ii) The proper procedures and equipment to perform multiple lifts required by WAC 296-155-704(5).

(b) Connector procedures. The employer must ensure that each connector has been provided training in the following areas:

(i) The nature of the hazards associated with connecting (see Appendix D for nonmandatory training guidelines); and

(ii) The establishment, access, proper connecting techniques, double connections, and work practices, required by WAC 296-155-708(3) and Part C-1, chapter 296-155 WAC.

[Statutory Authority: RCW 49.17.010, [49.17].040, and [49.17].050. 02-13-115, § 296-155-717, filed 6/19/02, effective 9/1/02.]

PART Q
UNDERGROUND CONSTRUCTION

WAC 296-155-725 Definitions applicable to this part. (1) "Acceptable" means any device, equipment, or appliance that is either approved by MSHA and maintained in permissible condition, or is listed or labeled for the class and location under Part I of this chapter.

(2) "Bulkhead" means an airtight structure separating the working chamber from free air or from another chamber under a lesser pressure than the working pressure.

(3) "Caisson" means a wood, steel, concrete or reinforced concrete, air- and water-tight chamber in which it is possible for persons to work under air pressure greater than atmospheric pressure to excavate material below water level.

(4) "Cofferdam" means a watertight barricade or enclosure erected, sunk, driven or otherwise fabricated to permit the performance of work where hydrostatic pressure exists.

(5) "Decanting" means a method used for decompressing under emergency circumstances. In this procedure, the

employees are brought to atmospheric pressure with a very high gas tension in the tissues and then immediately recompressed in a second and separate chamber or lock.

(6) "Emergency locks" means a lock designed to hold and permit the quick passage of an entire shift of employees.

(7) "High air" means air pressure used to supply power to pneumatic tools and devices.

(8) "Low air" means air supplied to pressurize working chambers and locks.

(9) "Man lock" means a chamber through which persons pass from one air pressure environment into another.

(10) "Materials lock" means a chamber through which materials and equipment pass from one air pressure environment into another.

(11) "Medical lock" means a special chamber in which employees are treated for decompression illness. It may also be used in pre-employment physical examinations to determine the adaptability of the prospective employee to changes in pressure.

(12) "Rapid excavation machine" means tunnel boring machines, shields, roadheaders, or any other similar excavation machine.

(13) "Normal condition" means one during which exposure to compressed air is limited to a single continuous working period followed by a single decompression in any given 24-hour period; the total time of exposure to compressed air during the single continuous working period is not interrupted by exposure to normal atmospheric pressure, and a second exposure to compressed air does not occur until at least 12 consecutive hours of exposure to normal atmospheric pressure has elapsed since the employee has been under pressure.

(14) "Pressure" means a force acting on a unit area. Usually shown as pounds per square inch. (p.s.i.)

(15) "Absolute pressure" (p.s.i.a.) means the sum of the atmospheric pressure and gauge pressure (p.s.i.g.)

(16) "Atmospheric pressure" means the pressure of air at sea level, usually 14.7 p.s.i.a. (1 atmosphere), or 0 p.s.i.g.

(17) "Gauge pressure" (p.s.i.g.) means pressure measured by a gauge and indicating the pressure exceeding atmospheric.

(18) "Safety screen" means an air- and water-tight diaphragm placed across the upper part of a compressed air tunnel between the face and bulkhead, in order to prevent flooding the crown of the tunnel between the safety screen and the bulkhead, thus providing a safe means of refuge and exit from a flooding or flooded tunnel.

(19) "Special decompression chamber" means a chamber to provide greater comfort for employees when the total decompression time exceeds 75 minutes.

(20) "Working chamber" means the space or compartment under air pressure in which the work is being done.

(21) "C.F.R." means Code of Federal Regulations.

(22) "MSHA" means Mine Safety and Health Administration.

(23) "NIOSH" means National Institute for Occupational Safety and Health.

[Statutory Authority: Chapter 49.17 RCW. 90-03-029 (Order 89-20), § 296-155-725, filed 1/11/90, effective 2/26/90. Statutory Authority: RCW 49.17.040 and 49.17.050. 86-03-074 (Order 86-14), § 296-155-725, filed 1/21/86; Order 74-26, § 296-155-725, filed 5/7/74, effective 6/6/74.]

WAC 296-155-730 Tunnels and shafts. (1) Scope and application.

(a) This section applies to the construction of underground tunnels, shafts, chambers, and passageways. This section also applies to cut-and-cover excavations which are both physically connected to ongoing underground construction operations within the scope of this section, and covered in such a manner as to create conditions characteristic of underground construction.

(b) This section does not apply to excavation and trenching operations covered by Part N of this chapter, such as foundation operations for above-ground structures that are not physically connected to underground construction operations, and surface excavation.

(c) The employer shall comply with the requirements of this part and chapter in addition to applicable requirements of chapter 296-36 WAC, Safety standards—Compressed air work.

(2) Access and egress.

(a) Each operation shall have a check-in/check-out system that will provide positive identification of every employee underground. An accurate record of identification and location of the employees shall be kept on the surface. This procedure is not required when the construction of underground facilities designed for human occupancy has been sufficiently completed so that the permanent environmental controls are effective, and when the remaining construction activity will not cause any environmental hazard, or structural failure within the facilities.

(b) The employer shall provide and maintain safe means of access and egress to all work stations.

(c) The employer shall provide access and egress in such a manner that employees are protected from being struck by excavators, haulage machines, trains, and other mobile equipment.

(d) The employer shall control access to all openings to prevent unauthorized entry underground. Unused chutes, manways, or other openings shall be tightly covered, bulkheaded, or fenced off, and shall be posted with warning signs indicating "keep out" or similar language. Completed or unused sections of the underground facility shall be barricaded.

(3) Safety instruction. All employees shall be instructed in the recognition and avoidance of hazards associated with underground construction activities including, where appropriate, the following subjects:

(a) Air monitoring;

(b) Ventilation;

(c) Confined space entry procedures;

(d) Permit-required confined space entry procedures;

(e) Illumination;

(f) Communications;

(g) Flood control;

(h) Mechanical equipment;

(i) Personal protective equipment;

(j) Explosives;

(k) Fire prevention and protection; and

(l) Emergency procedures, including evacuation plans and check-in/check-out systems.

(4) Notification.

(a) Oncoming shifts shall be informed of any hazardous occurrences or conditions that have affected, or might affect employee safety, including liberation of gas, equipment failures, earth or rock slides, cave-ins, floodings, fire(s), or explosions.

(b) Information specified in (a) of this subsection shall be recorded in a shift journal which shall be current prior to the end of each shift, and shall be located aboveground.

(c) Oncoming supervisory personnel shall read the notification prior to going underground, and shall signify their understanding of the contents by affixing their respective initials to the log.

(d) The hazard notification log shall be retained on the site until the completion of the project.

(e) The employer shall establish and maintain direct communications for coordination of activities with other employers whose operations at the jobsite affect or may affect the safety of employees underground.

(5) Communications.

(a) When natural unassisted voice communication is ineffective, a power-assisted means of voice communication shall be used to provide communication between the work face, the bottom of the shaft, and the surface.

(b) Two effective means of communication, at least one of which shall be voice communication, shall be provided in all shafts which are being developed or used either for personnel access or for hoisting. Additional requirements for hoist operator communication are contained in subsection (22)(c)(xv) of this section.

(c) Powered communication systems shall operate on an independent power supply, and shall be installed so that the use of or disruption of any one phone or signal location will not disrupt the operation of the system from any other location.

(d) Communication systems shall be tested upon initial entry of each shift to the underground, and as often as necessary at later times, to ensure that they are in working order.

(e) Any employee working alone underground in a hazardous location, who is both out of the range of natural unassisted voice communication and not under observation by other persons, shall be provided with an effective means of obtaining assistance in an emergency.

(6) Emergency provisions. Hoisting capability. When a shaft is used as a means of egress, the employer shall make advance arrangements for power-assisted hoisting capability to be readily available in an emergency, unless the regular hoisting means can continue to function in the event of an electrical power failure at the jobsite. Such hoisting means shall be designed so that the load hoist drum is powered in both directions of rotation and so that the brake is automatically applied upon power release or failure.

(7) Self-rescuers. The employer must provide self-rescuers certified by the National Institute for Occupational Safety and Health under 42 CFR part 84. The respirators must be immediately available to all employees at work stations in underground areas where employees might be trapped by smoke or gas. The selection, issuance, use, and care of respirators must be in accordance with the requirements of chapter 296-62 WAC, Part E.

(8) Designated person. At least one designated person shall be on duty aboveground whenever any employee is working underground. This designated person shall be responsible for securing immediate aid and keeping an accurate record of the number, identification, and location of employees who are underground in case of emergency. The designated person must not be so busy with other responsibilities that the personnel counting and identification function is encumbered.

(9) Emergency lighting. Each employee underground shall have an acceptable portable hand lamp or cap lamp in his or her work area for emergency use, unless natural light or an emergency lighting system provides adequate illumination for escape.

(10) Rescue teams.

(a) On jobsites where 25 or more employees work underground at one time, the employer shall provide (or make arrangements in advance with locally available rescue services to provide) at least two 5-person rescue teams, one on the jobsite or within one-half hour travel time from the entry point, and the other within 2 hours travel time.

(b) On jobsites where less than 25 employees work underground at one time, the employer shall provide (or make arrangements in advance with locally available rescue services to provide) at least one 5-person rescue team to be either on the jobsite or within one-half hour travel time from the entry point.

(c) Rescue team members shall be qualified in rescue procedures, the use and limitations of breathing apparatus, and the use of fire fighting equipment. Qualifications shall be reviewed not less than annually.

(d) On jobsites where flammable or noxious gases are encountered or anticipated in hazardous quantities, rescue team members shall practice donning and using pressure demand mode, self-contained breathing apparatuses monthly.

(e) The employer shall ensure that rescue teams are familiar with conditions at the jobsite.

(11) Hazardous classifications.

(a) Potentially gassy operations. Underground construction operations shall be classified as potentially gassy if either:

(i) Air monitoring discloses 10 percent or more of the lower explosive limit for methane or other flammable gases measured at 12 inches (304.8 mm)+/-0.25 inch (6.35 mm) from the roof, face, floor, or walls in any underground work area for more than a 24-hour period; or

(ii) The history of the geographical area or geological formation indicates that 10 percent or more of the lower explosive limit for methane or other flammable gases is likely to be encountered in such underground operations.

(b) Gassy operations. Underground construction operations shall be classified as gassy if:

(i) Air monitoring discloses 10 percent or more of the lower explosive limit for methane or other flammable gases measured at 12 inches (304.8 mm)+/-0.25 inch (6.35 mm) from the roof, face, floor, or walls in any underground work area for three consecutive days; or

(ii) There has been an ignition of methane or of other flammable gases emanating from the strata that indicates the presence of such gases; or

(iii) The underground construction operation is both connected to an underground work area which is currently classified as gassy and is also subject to a continuous course of air containing the flammable gas concentration.

(c) Declassification to potentially gassy operations. Underground construction gassy operations may be declassified to potentially gassy when air monitoring results remain under 10 percent of the lower explosive limit for methane or other flammable gases for three consecutive days.

(12) Gassy operations—Additional requirements. Only acceptable equipment, maintained in suitable condition, shall be used in gassy operations.

(a) Mobile diesel-powered equipment used in gassy operations shall be either approved in accordance with the requirements of 30 CFR Part 36 (formerly Schedule 31) by MSHA, or shall be demonstrated by the employer to be fully equivalent to such MSHA-approved equipment, and shall be operated in accordance with that part.

(b) Each entrance to a gassy operation shall be prominently posted with signs notifying all entrants of the gassy classification.

(c) Smoking shall be prohibited in all gassy operations and the employer shall be responsible for collecting all personal sources of ignition, such as matches and lighters, from all persons entering a gassy operation.

(d) A fire watch as described in chapter 296-155 WAC, Part H, shall be maintained when hot work is performed.

(e) Once an operation has met the criteria in subsection (11)(a)(i) of this section, warranting classification as gassy, all operations in the affected area, except the following, shall be discontinued until the operation either is in compliance with all of the gassy operation requirements or has been declassified in accordance with (c) of this subsection:

(i) Operations related to the control of the gas concentration;

(ii) Installation of new equipment, or conversion of existing equipment, to comply with this subsection; and

(iii) Installation of above-ground controls for reversing the air flow.

(13) Air quality and monitoring.

(a) General. Air quality limits and control requirements specified in chapter 296-62 WAC, Part H, shall apply except as modified by this subsection.

(b) The employer shall assign a competent person who shall perform all air monitoring required by this section.

(c) Where this section requires monitoring of airborne contaminants "as often as necessary," the competent person shall make a reasonable determination as to which substances to monitor and how frequently to monitor, considering at least the following factors:

(i) Location of jobsite: Proximity to fuel tanks, sewers, gas lines, old landfills, coal deposits, and swamps;

(ii) Geology: Geological studies of the jobsite, particularly involving the soil type and its permeability;

(iii) History: Presence of air contaminants in nearby jobsites, changes in levels of substances monitored on the prior shift; and

(iv) Work practices and jobsite conditions: The use of diesel engines, use of explosives, use of fuel gas, volume and flow of ventilation, visible atmospheric conditions, decompression of the atmosphere, welding, cutting and hot work, and employees' physical reactions to working underground.

(d) The employer shall provide testing and monitoring instruments which are capable of achieving compliance with the provisions of this subsection, and:

(i) Shall maintain the testing and monitoring instruments in good condition;

(ii) Shall calibrate the instruments on a frequency not to exceed 6 months.

(e) Exposure to airborne contaminants shall not exceed the levels established by chapter 296-62 WAC, Part H.

(f) Respirators shall not be substituted for environmental control measures. However, where environmental controls have not yet been developed, or when necessary by the nature of the work involved (for example, welding, sand blasting, lead burning), an employee may work for short periods of time in concentrations of airborne contaminants which exceed the limit of permissible exposure referred to in (d) of this subsection, if the employee wears a respiratory protective device certified by MSHA-NIOSH for protection against the particular hazards involved, and the selection and use of respirators complies with the provisions of chapter 296-62 WAC, Part E.

(g) Employees shall be withdrawn from areas in which there is a concentration of an airborne contaminant which exceeds the permissible exposure limit listed for that contaminant, except as modified in (t)(i) and (ii) of this subsection.

(h) The atmosphere in all underground work areas shall be tested as often as necessary to assure that the atmosphere at normal atmospheric pressure contains at least 19.5 percent oxygen and no more than 22 percent oxygen.

(i) Tests for oxygen content shall be made before tests for air contaminants.

(j) Field-type oxygen analyzers, or other suitable devices, shall be used to test for oxygen deficiency.

(k) The atmosphere in all underground work areas shall be tested quantitatively for carbon monoxide, nitrogen dioxide, hydrogen sulfide, and other toxic gases, dust, vapors, mists, and fumes as often as necessary to ensure that the permissible exposure limits prescribed in chapter 296-62 WAC, Part H, are not exceeded.

(l) The atmosphere in all underground work areas shall be tested quantitatively for methane and other flammable gases as often as necessary to determine:

(i) Whether action is to be taken under (q), (r), and (s) of this subsection; and

(ii) Whether an operation is to be classified potentially gassy or gassy under subsection (11) of this section.

(m) If diesel-engine or gasoline-engine driven ventilating fans or compressors are used, an initial test shall be made of the inlet air of the fan or compressor, with the engines operating, to ensure that the air supply is not contaminated by engine exhaust.

(n) Testing shall be performed as often as necessary to ensure that the ventilation requirements of subsection (15) of this section are met.

(o) When rapid excavation machines are used, a continuous flammable gas monitor shall be operated at the face with the sensor(s) placed as high and close to the front of the machine's cutter head as practicable.

(p) Whenever air monitoring indicates the presence of 5 ppm or more of hydrogen sulfide, a test shall be conducted in the affected underground work area(s), at least at the beginning and midpoint of each shift, until the concentration of hydrogen sulfide has been less than 5 ppm for 3 consecutive days.

(i) Whenever hydrogen sulfide is detected in an amount exceeding 10 ppm, a continuous sampling and indicating hydrogen sulfide monitor shall be used to monitor the affected work area.

(ii) Employees shall be informed when a concentration of 10 ppm hydrogen sulfide is exceeded.

(iii) The continuous sampling and indicating hydrogen sulfide monitor shall be designed, installed, and maintained to provide a visual and aural alarm when the hydrogen sulfide concentration reaches 15 ppm to signal that additional measures, such as respirator use, increased ventilation, or evacuation, might be necessary to maintain hydrogen sulfide exposure below the permissible exposure limit.

(q) When the competent person determines, on the basis of air monitoring results or other information, that air contaminants may be present in sufficient quantity to be dangerous to life, the employer shall:

(i) Prominently post a notice at all entrances to the underground jobsite to inform all entrants of the hazardous condition; and

(ii) Immediately increase sampling frequency levels to insure workers are not exposed to identified contaminants in excess of the permissible exposure limit(s); and

(iii) Ensure that all necessary precautions are taken to comply with pertinent requirements of this section, and chapter 296-62 WAC.

(r) Whenever five percent or more of the lower explosive limit for methane or other flammable gases is detected in any underground work area(s) or in the air return, steps shall be taken to increase ventilation air volume or otherwise control the gas concentration, unless the employer is operating in accordance with the potentially gassy or gassy operation requirements. Such additional ventilation controls may be discontinued when gas concentrations are reduced below five percent of the lower explosive limit, but shall be reinstituted whenever the five percent level is exceeded.

(s) Whenever 10 percent or more of the lower explosive limit for methane or other flammable gases is detected in the vicinity of welding, cutting, or other hot work, such work shall be suspended until the concentration of such flammable gas is reduced to less than 10 percent of the lower explosive limit.

(t) Whenever 20 percent or more of the lower explosive limit for methane or other flammable gases is detected in any underground work area(s) or in the air return:

(i) All employees, except those necessary to eliminate the hazard, shall be immediately withdrawn to a safe location above ground; and

(ii) Employees who remain underground to correct or eliminate the hazard described in (t) above shall be equipped with approved, pressure demand mode, self-contained breathing apparatus, and shall have received adequate training in the proper use of that equipment.

(iii) Electrical power, except for acceptable pumping and ventilation equipment, shall be cut off to the area endangered by the flammable gas until the concentration of such gas is reduced to less than 20 percent of the lower explosive limit.

(14) Additional monitoring for potentially gassy and gassy operations. Operations which meet the criteria for potentially gassy and gassy operations set forth in subsection (13) of this section shall be subject to the additional monitoring requirements of this subsection.

(a) A test for oxygen content shall be conducted in the affected underground work areas and work areas immediately adjacent to such areas at least at the beginning and midpoint of each shift.

(b) When using rapid excavation machines, continuous automatic flammable gas monitoring equipment shall be used to monitor the air at the heading, on the rib, and in the return air duct. The continuous monitor shall signal the heading, and shut down electric power in the affected underground work area, except for acceptable pumping and ventilation equipment, when 20 percent or more of the lower explosive limit for methane or other flammable gases is encountered.

(i) A manual flammable gas monitor shall be used as needed, but at least at the beginning and midpoint of each shift, to ensure that the limits prescribed in subsections (11) and (13) of this section are not exceeded. In addition, a manual electrical shut down control shall be provided near the heading.

(ii) Local gas tests shall be made prior to and continuously during any welding, cutting, or other hot work.

(iii) In underground operations driven by drill-and-blast methods, the air in the affected area shall be tested for flammable gas prior to re-entry after blasting, and continuously when employees are working underground.

(c) Recordkeeping. A record of all air quality tests shall be maintained above ground at the worksite and be made available to the director or his/her representatives upon request. The record shall include the location, date, time, substance and amount monitored. Records of exposures to toxic substances shall be retained in accordance with Part B, chapter 296-62 WAC. All other air quality test records shall be retained until completion of the project.

(15) Ventilation.

(a)(i) Fresh air shall be supplied to all underground work areas in sufficient quantities to prevent dangerous or harmful accumulation of dust, fumes, mists, vapors, or gases.

(ii) Mechanical ventilation shall be provided in all underground work areas except when the employer can demonstrate that natural ventilation provides the necessary air quality through sufficient air volume and air flow.

(b) A minimum of 200 cubic feet (5.7 m3) of fresh air per minute shall be supplied for each employee underground.

(c) The linear velocity of air flow in the tunnel bore, in shafts, and in all other underground work areas shall be at least 30 feet (9.15 m) per minute where blasting or rock drilling is conducted, or where other conditions likely to produce dust, fumes, mists, vapors, or gases in harmful or explosive quantities are present.

(d) The direction of mechanical air flow shall be reversible.

(e) Air that has passed through underground oil or fuel-storage areas shall not be used to ventilate working areas.

(f) Following blasting, ventilation systems shall exhaust smoke and fumes to the outside atmosphere before work is resumed in affected areas.

(g) Ventilation doors shall be designed and installed so that they remain closed when in use, regardless of the direction of the air flow.

(h) When ventilation has been reduced to the extent that hazardous levels of methane or flammable gas may have accumulated, a competent person shall test all affected areas after ventilation has been restored and shall determine whether the atmosphere is within flammable limits before any power, other than for acceptable equipment, is restored or work is resumed.

(i) Whenever the ventilation system has been shut down with all employees out of the underground area, only competent persons authorized to test for air contaminants shall be allowed underground until the ventilation has been restored and all affected areas have been tested for air contaminants and declared safe.

(j) When drilling rock or concrete, appropriate dust control measures shall be taken to maintain dust levels within limits set in chapter 296-155 WAC, Part B-1. Such measures may include, but are not limited to, wet drilling, the use of vacuum collectors, and water mix spray systems.

(k)(i) Internal combustion engines, except diesel-powered engines on mobile equipment, are prohibited underground.

(ii) Mobile diesel-powered equipment used underground in atmospheres other than gassy operations shall be either approved by MSHA in accordance with the provisions of 30 CFR Part 32 (formerly Schedule 24), or shall be demonstrated by the employer to be fully equivalent to such MSHA-approved equipment, and shall be operated in accordance with that Part. (Each brake horsepower of a diesel engine requires at least 100 cubic feet (28.32 m3) of air per minute for suitable operation in addition to the air requirements for personnel. Some engines may require a greater amount of air to ensure that the allowable levels of carbon monoxide, nitric oxide, and nitrogen dioxide are not exceeded.)

(iii) Application shall be made to the mining/explosives section, department of labor and industries, for permission to use specified diesel equipment in a specified underground area and shall include the following:

(A) The type of construction and complete identification data and specifications including analysis of the undiluted exhaust gases of the diesel equipment.

(B) The location where the diesel equipment is to be used.

(C) Before the diesel equipment is taken underground, written permission shall be obtained from the department of labor and industries or its duly authorized representative. A satisfactory test on surface, to show that the exhaust gases do not exceed the maximum percentage of carbon monoxide permitted, shall be required.

(D) Diesel equipment shall only be used underground where the ventilation is controlled by mechanical means and shall not be operated if the ventilating current is less than 100 CFM per horsepower based on the maximum brake horsepower of the engines.

(E) Air measurements shall be made at least once daily in the diesel engine working area and the measurements entered in the Underground Diesel Engine Record Book. Permissible maximum amounts of noxious gases are as follows:

At engine exhaust ports	Carbon Monoxide	.10%	1,000 ppm[3]
Next to equipment	Carbon Monoxide	.0035%	35 ppm
General atmosphere	Carbon Monoxide	.0035%	35 ppm
General atmosphere	Nitrogen Dioxide	.0001%	1 ppm
General atmosphere	Aldehydes	.0002%	2 ppm

[3] Parts of vapor or gas per million parts of contaminated air by volume at 25°C and 760 mm Hg. pressure.

(l) Potentially gassy or gassy operations shall have ventilation systems installed which shall:

(i) Be constructed of fire-resistant materials; and

(ii) Have acceptable electrical systems, including fan motors.

(m) Gassy operations shall be provided with controls located aboveground for reversing the air flow of ventilation systems.

(n) In potentially gassy or gassy operations, wherever mine-type ventilation systems using an offset main fan installed on the surface are used, they shall be equipped with explosion-doors or a weak-wall having an area at least equivalent to the cross-sectional area of the airway.

(16) Illumination.

(a) Sufficient lighting shall be provided, in accordance with the requirements of chapter 296-155 WAC, Part B-1, to permit safe operations at the face as well as in the general tunnel or shaft area and at the employees' workplace.

(b) Only acceptable portable lighting shall be used within 50 feet (15.24 m) of any underground heading during explosive handling.

(17) Fire prevention and control. Fire prevention and protection requirements applicable to underground construction operations are found in Part D of this chapter except as modified by the following additional standards.

(a) Open flames and fires are prohibited in all underground construction operations except as permitted for welding, cutting, and other hot work operations.

(i) Smoking may be allowed only in areas free of fire and explosion hazards.

(ii) Readily visible signs prohibiting smoking and open flames shall be posted in areas having fire or explosion hazards.

(iii) The carrying of matches, lighters, or other flame-producing smoking materials shall be prohibited in all underground operations where fire or explosion hazards exist.

(b) The employer may store underground no more than a 24-hour supply of diesel fuel for the underground equipment used at the worksite.

(c) The piping of diesel fuel from the surface to an underground location is permitted only if:

(i) Diesel fuel is contained at the surface in a tank whose maximum capacity is no more than the amount of fuel required to supply for a 24-hour period the equipment serviced by the underground fueling station; and

(ii) The surface tank is connected to the underground fueling station by an acceptable pipe or hose system that is controlled at the surface by a valve, and at the shaft bottom by a hose nozzle; and

(iii) The pipe is empty at all times except when transferring diesel fuel from the surface tank to a piece of equipment in use underground; and

(iv) Hoisting operations in the shaft are suspended during refueling operations if the supply piping in the shaft is not protected from damage.

(d)(i) Gasoline shall not be carried, stored, or used underground.

(ii) Acetylene, liquefied petroleum gas, and methylacetylene propadiene stabilized gas may be used underground only for welding, cutting and other hot work, and only in accordance with Part H of this chapter and subsections (13), (15), (17), and (18) of this section.

(e) Oil, grease, and diesel fuel stored underground shall be kept in tightly sealed containers in fire-resistant areas at least 300 feet (91.44 m) from underground explosive magazines, and at least 100 feet (30.48 m) from shaft stations and steeply inclined passageways. Storage areas shall be positioned or diked so that the contents of ruptured or overturned containers will not flow from the storage area.

(f) Flammable or combustible materials shall not be stored above ground within 100 feet (30.48 m) of any access opening to any underground operation. Where this is not feasible because of space limitations at the jobsite, such materials may be located within the 100-foot limit, provided that:

(i) They are located as far as practicable from the opening; and

(ii) Either a fire-resistant barrier of not less than one-hour rating is placed between the stored material and the opening, or additional precautions are taken which will protect the materials from ignition sources.

(g) Fire-resistant hydraulic fluids shall be used in hydraulically-actuated underground machinery and equipment unless such equipment is protected by a fire suppression system or by multipurpose fire extinguisher(s) rated at a sufficient capacity for the type and size of hydraulic equipment involved, but rated at least 4A:4OB:C.

(h)(i) Electrical installations in underground areas where oil, grease, or diesel fuel are stored shall be used only for lighting fixtures.

(ii) Lighting fixtures in storage areas, or within 25 feet (7.62 m) of underground areas where oil, grease, or diesel fuel are stored, shall be approved for Class I, Division 2 locations, in accordance with Part I of this chapter.

(i) Leaks and spills of flammable or combustible fluids shall be cleaned up immediately.

(j) A fire extinguisher of at least 4A:4OB:C rating or other equivalent extinguishing means shall be provided at the head pulley and at the tail pulley of underground belt conveyors, and at 300-foot intervals along the belt.

(k) Any structure located underground or within 100 feet (30.48 m) of an opening to the underground shall be constructed of material having a fire-resistance rating of at least one hour.

(18) Welding, cutting, and other hot work. In addition to the requirements of Part H of this chapter, the following requirements shall apply to underground welding, cutting, and other hot work.

(a) No more than the amount of fuel gas and oxygen cylinders necessary to perform welding, cutting, or other hot work during the next 24-hour period shall be permitted underground.

(b) Noncombustible barriers shall be installed below welding, cutting, or other hot work being done in or over a shaft or raise.

(19) Ground support.

(a) In tunnels (other than hard rock) timber sets, steel rings, steel frames, concrete liners, or other engineered tunnel support systems shall be used. Every tunnel support system shall be designed by a licensed professional engineer. Design specifications shall be available at the worksite.

(b) Portal areas. Portal openings and access areas shall be guarded by shoring, fencing, head walls, shotcreting, or other equivalent protection to ensure safe access of employees and equipment. Adjacent areas shall be scaled or otherwise secured to prevent loose soil, rock, or fractured materials from endangering the portal and access area.

(c) Subsidence areas. The employer shall ensure ground stability in hazardous subsidence areas by shoring, by filling in, or by erecting barricades and posting warning signs to prevent entry.

(d) Underground areas.

(i)(A) A competent person shall inspect the roof, face, and walls of the work area at the start of each shift and as often as necessary to determine ground stability.

(B) Competent persons conducting such inspections shall be protected from loose ground by location, ground support, or equivalent means.

(ii) Ground conditions along haulageways and travelways shall be inspected as frequently as necessary to ensure safe passage.

(iii) Loose ground that might be hazardous to employees shall be taken down, scaled, or supported.

(iv) Torque wrenches shall be used wherever bolts that depend on torsionally applied force are used for ground support.

(v) A competent person shall determine whether rock bolts meet the necessary torque, and shall determine the testing frequency in light of the bolt system, ground conditions, and the distance from vibration sources.

(vi) Suitable protection shall be provided for employees exposed to the hazard of loose ground while installing ground support systems.

(vii) Support sets shall be installed so that the bottoms have sufficient anchorage to prevent ground pressures from dislodging the support base of the sets. Lateral bracing (collar bracing, tie rods, or spreaders) shall be provided between immediately adjacent sets to ensure added stability.

(viii) Damaged or dislodged ground supports that create a hazardous condition shall be promptly repaired or replaced. When replacing supports, the new supports shall be installed before the damaged supports are removed.

(ix) A shield or other type of support shall be used to maintain a safe travelway for employees working in dead-end areas ahead of any support replacement operation.

(e) Shafts.

(i) Shafts and wells over 4 feet (1.219 m) in depth that employees must enter shall be supported by a steel casing, concrete pipe, timber, solid rock, or other suitable material.

(ii)(A) The full depth of the shaft shall be supported by casing or bracing except where the shaft penetrates into solid

rock having characteristics that will not change as a result of exposure. Where the shaft passes through earth into solid rock, or through solid rock into earth, and where there is potential for shear, the casing or bracing shall extend at least 5 feet (1.53 m) into the solid rock. When the shaft terminates in solid rock, the casing or bracing shall extend to the end of the shaft or 5 feet (1.53 m) into the solid rock, whichever is less.

(B) The casing or bracing shall extend 42 inches (1.07 m) plus or minus 3 inches (8 cm) above ground level, except that the minimum casing height may be reduced to 12 inches (0.3 m), provided that a standard railing is installed; that the ground adjacent to the top of the shaft is sloped away from the shaft collar to prevent entry of liquids; and that effective barriers are used to prevent mobile equipment operating near the shaft from jumping over the 12-inch (0.3 m) barrier.

(iii) After blasting operations in shafts, a competent person shall determine if the walls, ladders, timbers, blocking, or wedges have loosened. If so, necessary repairs shall be made before employees other than those assigned to make the repairs are allowed in or below the affected areas.

(f) Blasting. This subsection applies in addition to the requirements for blasting and explosives operations, including handling of misfires, which are found in chapter 296-52 WAC.

(i) Blasting wires shall be kept clear of electrical lines, pipes, rails, and other conductive material, excluding earth, to prevent explosives initiation or employee exposure to electric current.

(ii) Following blasting, an employee shall not enter a work area until the air quality meets the requirements of subsection (13) of this section.

(g) Drilling.

(i) A competent person shall inspect all drilling and associated equipment prior to each use. Equipment defects affecting safety shall be corrected before the equipment is used.

(ii) The drilling area shall be inspected for hazards before the drilling operation is started.

(iii) Employees shall not be allowed on a drill mast while the drill bit is in operation or the drill machine is being moved.

(iv) When a drill machine is being moved from one drilling area to another, drill steel, tools, and other equipment shall be secured and the mast shall be placed in a safe position.

(v) Receptacles or racks shall be provided for storing drill steel located on jumbos.

(vi) Employees working below jumbo decks shall be warned whenever drilling is about to begin.

(vii) Drills on columns shall be anchored firmly before starting drilling, and shall be retightened as necessary thereafter.

(viii) The employer shall provide mechanical means on the top deck of a jumbo for lifting unwieldy or heavy material.

(ix) When jumbo decks are over 10 feet (3.05 m) in height, the employer shall install stairs wide enough for two persons.

(x) Jumbo decks more than 10 feet (3.05 m) in height shall be equipped with guardrails on all open sides, excluding access openings of platforms, unless an adjacent surface provides equivalent fall protection.

(xi) Only employees assisting the operator shall be allowed to ride on jumbos, unless the jumbo meets the requirements of subsection (20)(e) of this section.

Note: For additional requirements relating to portable fire extinguishers see WAC 296-800-300.

(xii) Jumbos shall be chocked to prevent movement while employees are working on them.

(xiii) Walking and working surfaces of jumbos shall be maintained to prevent the hazards of slipping, tripping, and falling.

(xiv) Jumbo decks and stair treads shall be designed to be slip-resistant and secured to prevent accidental displacement.

(xv) Scaling bars shall be available at scaling operations and shall be maintained in good condition at all times. Blunted or severely worn bars shall not be used.

(xvi) Before commencing the drill cycle, the face and lifters shall be examined for misfires (residual explosives) and, if found, they shall be removed before drilling commences at the face. Blasting holes shall not be drilled through blasted rock (muck) or water.

(xvii) Employees in a shaft shall be protected either by location or by suitable barrier(s) if powered mechanical loading equipment is used to remove muck containing unfired explosives.

(xviii) A caution sign reading "buried line," or similar wording shall be posted where air lines are buried or otherwise hidden by water or debris.

(20) Haulage.

(a) A competent person shall inspect haulage equipment before each shift.

(i) Equipment defects affecting safety and health shall be corrected before the equipment is used.

(ii) Powered mobile haulage equipment shall be provided with adequate brakes.

(iii) Power mobile haulage equipment, including trains, shall have audible warning devices to warn employees to stay clear. The operator shall sound the warning device before moving the equipment and whenever necessary during travel.

(iv) The operator shall assure that lights which are visible to employees at both ends of any mobile equipment, including a train, are turned on whenever the equipment is operating.

(v) In those cabs where glazing is used, the glass shall be safety glass, or its equivalent, and shall be maintained and cleaned so that vision is not obstructed.

(b) Antirollback devices or brakes shall be installed on inclined conveyor drive units to prevent conveyors from inadvertently running in reverse. Employees shall not be permitted to ride a power-driven chain, belt, or bucket conveyor unless the conveyor is specifically designed for the transportation of persons.

(c) Endless belt-type manlifts are prohibited in underground construction.

(d) General requirements also applicable to underground construction for use of conveyors in construction are found in chapter 296-155 WAC, Part L.

(e) No employee shall ride haulage equipment unless it is equipped with seating for each passenger and protects pas-

sengers from being struck, crushed, or caught between other equipment or surfaces. Members of train crews may ride on a locomotive if it is equipped with handholds and nonslip steps or footboards. Requirements applicable to underground construction for motor vehicle transportation of employees are found in chapter 296-155 WAC, Part M.

(f) Conveyor lockout.

(i) Conveyors shall be de-energized and locked out with a padlock, and tagged out with a "Do Not Operate" tag at any time repair, maintenance, or clean-up work is being performed on the conveyor.

(ii) Tags or push button stops are not acceptable.

(iii) Persons shall not be allowed to walk on conveyors except for emergency purposes and then only after the conveyor has been deenergized and locked out in accordance with (f) above, and persons can do so safely.

(g) Powered mobile haulage equipment, including trains, shall not be left unattended unless the master switch or motor is turned off; operating controls are in neutral or park position; and the brakes are set, or equivalent precautions are taken to prevent rolling.

(h) Whenever rails serve as a return for a trolley circuit, both rails shall be bonded at every joint and crossbonded every 200 feet (60.96 m).

(i) When dumping cars by hand, the car dumps shall have tiedown chains, bumper blocks, or other locking or holding devices to prevent the cars from overturning.

(j) Rocker-bottom or bottom-dump cars shall be equipped with positive locking devices to prevent unintended dumping.

(k) Equipment to be hauled shall be loaded and secured to prevent sliding or dislodgement.

(l)(i) Mobile equipment, including rail-mounted equipment, shall be stopped for manual connecting or service work, and;

(ii) Employees shall not reach between moving cars during coupling operations.

(iii) Couplings shall not be aligned, shifted, or cleaned on moving cars or locomotives.

(iv) Safety chains or other connections shall be used in addition to couplers to connect person cars or powder cars whenever the locomotive is uphill of the cars.

(v) When the grade exceeds one percent and there is a potential for runaway cars, safety chains or other connections shall be used in addition to couplers to connect haulage cars or, as an alternative, the locomotive must be downhill of the train.

(vi) Such safety chains or other connections shall be capable of maintaining connection between cars in the event of either coupler disconnect, failure or breakage.

(m) Parked rail equipment shall be chocked, blocked, or have brakes set to prevent inadvertent movement.

(n) Berms, bumper blocks, safety hooks, or equivalent means shall be provided to prevent overtravel and overturning of haulage equipment at dumping locations.

(o) Bumper blocks or equivalent stopping devices shall be provided at all track dead ends.

(p)(i) Only small handtools, lunch pails, or similar small items may be transported with employees in person cars, or on top of a locomotive.

(ii) When small hand tools or other small items are carried on top of a locomotive, the top shall be designed or modified to retain them while traveling.

(q)(i) Where switching facilities are available, occupied personnel cars shall be pulled, not pushed. If personnel cars must be pushed and visibility of the track ahead is hampered, then a qualified person shall be stationed in the lead car to give signals to the locomotive operator.

(ii) Crew trips shall consist of personnel loads only.

(21) Electrical safety. This subsection applies in addition to the general requirements for electrical safety which are found in Part I of this chapter.

(a) Electric power lines shall be insulated or located away from water lines, telephone lines, air lines, or other conductive materials so that a damaged circuit will not energize the other systems.

(b) Lighting circuits shall be located so that movement of personnel or equipment will not damage the circuits or disrupt service.

(c) Oil-filled transformers shall not be used underground unless they are located in a fire-resistant enclosure suitably vented to the outside and surrounded by a dike to retain the contents of the transformers in the event of rupture.

(22) Hoisting unique to underground construction except as modified by this section, the following provisions of chapter 296-155 WAC, Part L apply: Requirements for cranes are found in WAC 296-155-525. WAC 296-155-528 contains rules applicable to crane hoisting of personnel, except, that the limitations imposed by WAC 296-155-528(2) do not apply to the routine access of employees to the underground via a shaft. Requirements for personnel hoists, material hoists, and elevators are found in WAC 296-155-530 and in this subsection.

(a) General requirements for cranes and hoists.

(i) Materials, tools, and supplies being raised or lowered, whether within a cage or otherwise, shall be secured or stacked in a manner to prevent the load from shifting, snagging, or falling into the shaft.

(ii) A warning light suitably located to warn employees at the shaft bottom and subsurface shaft entrances shall flash whenever a load is above the shaft bottom or subsurface entrances, or the load is being moved in the shaft. This subsection does not apply to fully enclosed hoistways.

(iii) Whenever a hoistway is not fully enclosed and employees are at the shaft bottom, conveyances or equipment shall be stopped at least 15 feet (4.57 m) above the bottom of the shaft and held there until the signalperson at the bottom of the shaft directs the operator to continue lowering the load, except that the load may be lowered without stopping if the load or conveyance is within full view of a bottom signalperson who is in constant voice communication with the operator.

(iv)(A) Before maintenance, repairs, or other work is commenced in the shaft served by a cage, skip, or bucket, the operator and other employees in the area shall be informed and given suitable instructions.

(B) A sign warning that work is being done in the shaft shall be installed at the shaft collar, at the operator's station, and at each underground landing.

(v) Any connection between the hoisting rope and the cage or skip shall be compatible with the type of wire rope used for hoisting.

(vi) Spin-type connections, where used, shall be maintained in a clean condition and protected from foreign matter that could affect their operation.

(vii) Cage, skip, and load connections to the hoist rope shall be made so that the force of the hoist pull, vibration, misalignment, release of lift force, or impact will not disengage the connection. Only closed shackles shall be used for cage and skip rigging.

(viii) When using wire rope wedge sockets, means shall be provided to prevent wedge escapement and to ensure that the wedge is properly seated.

(b) Additional requirements for cranes. Cranes shall be equipped with a limit switch to prevent overtravel at the boom tip. Limit switches are to be used only to limit travel of loads when operational controls malfunction and shall not be used as a substitute for other operational controls.

(c) Additional requirements for hoists.

(i) Hoists shall be designed so that the load hoist drum is powered in both directions of rotation, and so that brakes are automatically applied upon power release or failure.

(ii) Control levers shall be of the "deadman type" which return automatically to their center (neutral) position upon release.

(iii) When a hoist is used for both personnel hoisting and material hoisting, load and speed ratings for personnel and for materials shall be assigned to the equipment.

(iv) Hoist machines with cast metal parts shall not be used.

(v) Material hoisting may be performed at speeds higher than the rated speed for personnel hoisting if the hoist and components have been designed for such higher speeds and if shaft conditions permit.

(vi) Employees shall not ride on top of any cage, skip, or bucket except when necessary to perform inspection or maintenance of the hoisting system, in which case they shall be protected by a body belt/harness system to prevent falling.

(vii) Personnel and materials (other than small tools and supplies secured in a manner that will not create a hazard to employees) shall not be hoisted together in the same conveyance. However, if the operator is protected from the shifting of materials, then the operator may ride with materials in cages or skips which are designed to be controlled by an operator within the cage or skip.

(viii) Line speed shall not exceed the design limitations of the systems.

(ix) Hoists shall be equipped with landing level indicators at the operator's station. Marking of the hoist rope does not satisfy this requirement.

(x) Whenever glazing is used in the hoist house, it shall be safety glass, or its equivalent, and be free of distortions and obstructions.

(xi) A fire extinguisher that is rated at least 2A:10B:C (multipurpose, dry chemical) shall be mounted in each hoist house.

(xii) Hoist controls shall be arranged so that the operator can perform all operating cycle functions and reach the emergency power cutoff without having to reach beyond the operator's normal operating position.

(xiii) Hoists shall be equipped with limit switches to prevent overtravel at the top and bottom of the hoistway.

(xiv) Limit switches are to be used only to limit travel of loads when operational controls malfunction and shall not be used as a substitute for other operational controls.

(xv) Hoist operators shall be provided with a closed-circuit voice communication system to each landing station, with speaker-microphones so located that the operator can communicate with individual landing stations during hoist use.

(xvi) When sinking shafts 75 feet (22.86 m) or less in depth, cages, skips, and buckets that may swing, bump, or snag against shaft sides or other structural protrusions shall be guided by fenders, rails, ropes, or a combination of those means.

(xvii) When sinking shafts more than 75 feet (22.86 m) in depth, all cages, skips, and buckets shall be rope or rail-guided to within a rail length from the sinking operation.

(xviii) Cages, skips, and buckets in all completed shafts, or in all shafts being used as completed shafts, shall be rope or rail-guided for the full length of their travel.

(xix) Wire rope used in load lines of material hoists shall be capable of supporting, without failure, at least five times the maximum intended load or the factor recommended by the rope manufacturer, whichever is greater. Refer to chapter 296-155 WAC, Part L, for design factors for wire rope used in personnel hoists. The design factors shall be calculated by dividing the breaking strength of wire rope, as reported in the manufacturer's rating tables, by the total static load, including the weight of the wire rope in the shaft when fully extended.

(xx) A competent person shall visually check all hoisting machinery, equipment, anchorages, and hoisting rope at the beginning of each shift and during hoist use, as necessary.

(xxi) Each safety device shall be checked by a competent person at least weekly during hoist use to ensure suitable operation and safe condition.

(xxii) In order to ensure suitable operation and safe condition of all functions and safety devices, each hoist assembly shall be inspected and load-tested to 100 percent of its rated capacity: At the time of installation; after any repairs or alterations affecting its structural integrity; after the operation of any safety device; and annually when in use. The employer shall prepare a certification record which includes the date each inspection and load-test was performed; the signature of the person who performed the inspection and test; and a serial number or other identifier for the hoist that was inspected and tested. The most recent certification record shall be maintained on file until completion of the project.

(xxiii) Before hoisting personnel or material, the operator shall perform a test run of any cage or skip whenever it has been out of service for one complete shift, and whenever the assembly or components have been repaired or adjusted.

(xiv) Unsafe conditions shall be corrected before using the equipment.

(d) Additional requirements for personnel hoists.

(i) Hoist drum systems shall be equipped with at least two means of stopping the load, each of which shall be capable of stopping and holding 150 percent of the hoist's rated line pull. A broken-rope safety, safety catch, or arrestment device is not a permissible means of stopping under this subsection.

(ii) The operator shall remain within sight and sound of the signals at the operator's station.

(iii) All sides of personnel cages shall be enclosed by one-half inch (12.70 mm) wire mesh (not less than No. 14 gauge or equivalent) to a height of not less than 6 feet (1.83 m). However, when the cage or skip is being used as a work platform, its sides may be reduced in height to 42 inches (1.07 m) when the conveyance is not in motion.

(iv) All personnel cages shall be provided with a positive locking door that does not open outward.

(v) All personnel cages shall be provided with a protective canopy. The canopy shall be made of steel plate, at least 3/16 -inch (4.763 mm) in thickness, or material of equivalent strength and impact resistance. The canopy shall be sloped to the outside, and so designed that a section may be readily pushed upward to afford emergency egress. The canopy shall cover the top in such a manner as to protect those inside from objects falling in the shaft.

(vi) Personnel platforms operating on guide rails or guide ropes shall be equipped with broken-rope safety devices, safety catches, or arrestment devices that will stop and hold 150 percent of the weight of the personnel platform and its maximum rated load.

(vii) During sinking operations in shafts where guides and safeties are not yet used, the travel speed of the personnel platform shall not exceed 200 feet (60.96 m) per minute. Governor controls set for 200 feet (60.96 m) per minute shall be installed in the control system and shall be used during personnel hoisting.

(viii) The personnel platform may travel over the controlled length of the hoistway at rated speeds up to 600 feet (182.88 m) per minute during sinking operations in shafts where guides and safeties are used.

(ix) The personnel platform may travel at rated speeds greater than 600 feet (182.88 m) per minute in complete shafts.

[Statutory Authority: RCW 49.17.010, [49.17].040, and [49.17].050. 01-17-033, § 296-155-730, filed 8/8/01, effective 9/1/01; 99-10-071, § 296-155-730, filed 5/4/99, effective 9/1/99. Statutory Authority: RCW 49.17.010, [49.17].040, [49.17].050 and [49.17].060. 98-05-046, § 296-155-730, filed 2/13/98, effective 4/15/98. Statutory Authority: Chapter 49.17 RCW. 95-04-007, § 296-155-730, filed 1/18/95, effective 3/1/95; 94-15-096 (Order 94-07), § 296-155-730, filed 7/20/94, effective 9/20/94; 91-11-070 (Order 91-01), § 296-155-730, filed 5/20/91, effective 6/20/91; 90-03-029 (Order 89-20), § 296-155-730, filed 1/11/90, effective 2/26/90. Statutory Authority: RCW 49.17.040 and 49.17.050. 86-03-074 (Order 86-14), § 296-155-730, filed 1/21/86; Order 76-29, § 296-155-730, filed 9/30/76; Order 74-26, § 296-155-730, filed 5/7/74, effective 6/6/74.]

WAC 296-155-735 Caissons. (1) Wherever, in caisson work in which compressed air is used, and the working chamber is less than 11 feet in length, and when such caissons are at any time suspended or hung while work is in progress so that the bottom of the excavation is more than 9 feet below the deck of the working chamber, a shield shall be erected therein for the protection of the employees.

(2) Shafts shall be subjected to a hydrostatic or airpressure test, at which pressure they shall be tight. The shaft shall be stamped on the outside shell about 12 inches from each flange to show the pressure to which they have been subjected.

(3) Whenever a shaft is used, it shall be provided, where space permits, with a safe, proper, and suitable staircase for its entire length, including landing platforms, not more than 20 feet apart. Where this is impracticable, suitable ladders shall be installed with landing platforms located about 20 feet apart to break the climb.

(4) All caissons, having a diameter or side greater than 10 feet shall be provided with a man lock and shaft for the exclusive use of employees.

(5) In addition to the gauge in the locks, an accurate gauge shall be maintained on the outer and inner side of each bulkhead. These gauges shall be accessible at all times and kept in accurate working order.

(6) In caisson operations where employees are exposed to compressed air working environments, the requirements contained in WAC 296-155-745 shall be complied with.

[Order 74-26, § 296-155-735, filed 5/7/74, effective 6/6/74.]

WAC 296-155-740 Cofferdams. (1) If overtopping of the cofferdam by high waters is possible, means shall be provided for controlled flooding of the work area.

(2) Warning signals for evacuation of employees in case of emergency shall be developed and posted.

(3) Cofferdam walkways, bridges, or ramps with at least two means of rapid exit, shall be provided with guardrails as specified in Part K of this chapter.

(4) Manways and ladderways shall be installed separately from the hoistways and partitioned off to prevent hoisted materials from protruding into or falling into manways and/or ladderways.

(5) Pumping equipment shall be located on substantially constructed platforms and where installed in such a position that persons must work below, toe boards shall be installed on the platform.

(6) Cofferdams located close to navigable shipping channels shall be protected from vessels in transit, where possible.

[Statutory Authority: RCW 49.17.040, [49.17.]050 and [49.17.]060. 96-24-051, § 296-155-740, filed 11/27/96, effective 2/1/97. Statutory Authority: Chapter 49.17 RCW. 95-10-016, § 296-155-740, filed 4/25/95, effective 10/1/95; Order 74-26, § 296-155-740, filed 5/7/74, effective 6/6/74.]

WAC 296-155-745 Compressed air. (1) General provisions.

(a) There shall be present, at all times, at least one competent person designated by and representing the employer, who shall be familiar with this part in all respects and responsible for full compliance with these and other applicable parts.

(b) Every employee shall be instructed in the rules and regulations which concern their safety or the safety of others.

(2) Medical attendance, examination, and regulations.

(a) There shall be retained one or more licensed physicians familiar with and experienced in the physical requirements and the medical aspects of compressed air work and the treatment of decompression illness. They shall be available at all times while work is in progress in order to provide medical supervision of employees employed in compressed air work. They shall be physically qualified and be willing to enter a pressurized environment.

(b) No employee shall be permitted to enter a compressed air environment until they have been examined by

the physician and reported to be physically qualified to engage in such work.

(c) In the event an employee is absent from work for 10 days, or is absent due to sickness or injury, they shall not resume work until they are reexamined by the physician, and their physical condition reported, as provided in this subsection, to be such as to permit them to work in compressed air.

(d) After an employee has been employed continuously in compressed air for a period designated by the physician, but not to exceed 1 year, the employee shall be reexamined by the physician to determine if they are still physically qualified to engage in compressed air work.

(e) Such physician shall at all times keep a complete and full record of examinations made by themselves. The physician shall also keep an accurate record of any decompression illness or other illness or injury incapacitating any employee for work, and of all loss of life that occurs in the operation of a tunnel, caisson, or other compartment in which compressed air is used.

(f) Records shall be available for the inspection by the director or his/her representatives, and a copy thereof shall be forwarded to the department within 48 hours following the occurrence of the accident, death, injury, or decompression illness. It shall state as fully as possible the cause of said death or decompression illness, and the place where the injured or sick employee was taken, and such other relative information as may be required by the director.

(g) A fully equipped first-aid station shall be provided at each tunnel project regardless of the number of persons employed. An ambulance or transportation suitable for a litter case shall be at each project.

(h) Where tunnels are being excavated from portals more than 5 road miles apart, a first-aid station and transportation facilities shall be provided at each portal.

(i) A medical lock shall be established and maintained in immediate working order whenever air pressure in the working chamber is increased above the normal atmosphere.

(j) The medical lock shall:

(i) Have at least 6 feet of clear headroom at the center, and be subdivided into not less than two compartments;

(ii) Be readily accessible to employees working under compressed air;

(iii) Be kept ready for immediate use for at least 5 hours subsequent to the emergence of any employee from the working chamber;

(iv) Be properly heated, lighted and ventilated;

(v) Be maintained in a sanitary condition;

(vi) Have a nonshatterable port through which the occupant(s) may be kept under constant observation;

(vii) Be designed for a working pressure of 75 p.s.i.g.;

(viii) Be equipped with internal controls which may be overridden by external controls;

(ix) Be provided with air pressure gauges to show the air pressure within each compartment to observers inside and outside the medical lock;

(x) Be equipped with a manual type sprinkler system that can be activated inside the lock or by the outside lock tender;

(xi) Be provided with oxygen lines and fittings leading into external tanks. The lines shall be fitted with check valves to prevent reverse flow. The oxygen system inside the chamber shall be of a closed circuit design and be so designed as to automatically shut off the oxygen supply whenever the fire system is activated.

(xii) Be in constant charge of an attendant under the direct control of the retained physician. The attendant shall be trained in the use of the lock and suitably instructed regarding steps to be taken in the treatment of employee exhibiting symptoms compatible with a diagnosis of decompression illness;

(xiii) Be adjacent to an adequate emergency medical facility;

(xiv) The medical facility shall be equipped with demand-type oxygen inhalation equipment approved by the U.S. Bureau of Mines or Mine Safety and Health Administration (MSHA) and the National Institute for Occupational Safety and Health (NIOSH);

(xv) Be capable of being maintained at a temperature, in use, not to exceed 90°F. nor be less than 70°F.; and

(xvi) Be provided with sources of air, free of oil and carbon monoxide, for normal and emergency use, which are capable of raising the air pressure in the lock from 0 to 75 p.s.i.g. in 5 minutes.

(k) Identification badges shall be furnished to all employees, indicating that the wearer is a compressed air worker. A permanent record shall be kept of all identification badges issued. The badge shall give the employee's name, address of the medical lock, the telephone number of the licensed physician for the compressed air project, and contain instructions that in case of emergency of unknown or doubtful cause or illness, the wearer shall be rushed to the medical lock. The badge shall be worn at all times—off the job, as well as on the job.

(3) Telephone and signal communication. Effective and reliable means of communication, such as bells, whistles, or telephones, shall be maintained at all times between all the following locations;

(a) The working chamber face;

(b) The working chamber side of the man lock near the door;

(c) The interior of the man lock;

(d) Lock attendant's station;

(e) The compressor plant;

(f) The first-aid station;

(g) The emergency lock (if one is required); and

(h) The special decompression chamber (if one is required).

(4) Signs and records.

(a) The time of decompression shall be posted in each man lock as follows:

TIME OF DECOMPRESSION FOR THIS LOCK

. . . . . pounds to . . . . . pounds in . . . . . minutes.
. . . . . pounds to . . . . . pounds in . . . . . minutes.
(Signed by) . . . . . .
(Superintendent)

This form shall be posted in the man lock at all times.

(b) Any code of signals used shall be conspicuously posted near workplace entrances and such other locations as may be necessary to bring them to the attention of all employees concerned.

(c) For each 8-hour shift, a record of employees employed under air pressure shall be kept by an employee who shall remain outside the lock near the entrance. This record shall show the period each employee spends in the air chamber and the time taken from decompression. A copy shall be submitted to the appointed physician after each shift.

(5) Compression.

(a) Every employee going under air pressure for the first time shall be instructed on how to avoid excessive discomfort.

(b) During the compression of employees, the pressure shall not be increased to more than 3 p.s.i.g. within the first minute. The pressure shall be held at 3 p.s.i.g. and again at 7 p.s.i.g. sufficiently long to determine if any employees are experiencing discomfort.

(c) After the first minute the pressure shall be raised uniformly and at a rate not to exceed 10 p.s.i. per minute.

(d) If any employee complains of discomfort, the pressure shall be held to determine if the symptoms are relieved. If, after 5 minutes the discomfort does not disappear, the lock attendant shall gradually reduce the pressure until the employee signals that the discomfort has ceased. If the employee does not indicate that the discomfort has disappeared, the lock attendant shall reduce the pressure to atmospheric and the employee shall be released from the lock.

(e) No employee shall be subjected to pressure exceeding 50 pounds per square inch except in an emergency.

(6) Decompression.

(a) Decompression to normal condition shall be in accordance with the decompression tables in Appendix A of this part.

(b) In the event it is necessary for an employee to be in compressed air more than once in a 24-hour period, the appointed physician shall be responsible for the establishment of methods and procedures of decompression applicable to repetitive exposures.

(c) If decanting is necessary, the appointed physician shall establish procedures before any employee is permitted to be decompressed by decanting methods. The period of time that the employees spend at atmospheric pressure between the decompression following the shift and recompression shall not exceed 5 minutes.

(7) Man locks and special decompression chambers.

(a) Man locks.

(i) Except in emergency, no employees employed in compressed air shall be permitted to pass from the working chamber to atmospheric pressure until after decompression, in accordance with the procedures in this part.

(ii) The lock attendant in charge of a man lock shall be under the direct supervision of the appointed physician. The lock attendant shall be stationed at the lock controls on the free air side during the period of compression and decompression and shall remain at the lock control station whenever there are persons in the working chamber or in the man lock.

(iii) Except where air pressure in the working chamber is below 12 p.s.i.g., each man lock shall be equipped with automatic controls which, through taped programs, cams, or similar apparatus, shall automatically regulate decompressions. It shall also be equipped with manual controls to permit the lock attendant to override the automatic mechanism in the event of an emergency, as provided in item (viii) of this subdivision.

(iv) A manual control, which can be used in the event of an emergency, shall be placed inside the man lock.

(v) A clock, thermometer, and continuous recording pressure gauge with a 4-hour graph shall be installed outside of each man lock and shall be changed prior to each shift's decompression. The chart shall be of sufficient size to register a legible record of variations in pressure within the man lock and shall be visible to the lock attendant. A copy of each graph shall be submitted to the appointed physician after each shift. In addition, a pressure gauge, clock, and thermometer shall also be installed in each man lock. Additional fittings shall be provided so that the test gauges may be attached whenever necessary

(vi) Except where air pressure is below 12 p.s.i.g. and there is no danger of rapid flooding, all caissons having a working area greater than 150 square feet, and each bulkhead in tunnels of 14 feet or more in diameter, or equivalent area, shall have at least two locks in perfect working condition, one of which shall be used exclusively as a man lock, the other, as a materials lock.

(vii) Where only a combination man-and-materials lock is required, this single lock shall be of sufficient capacity to hold the employees constituting two successive shifts.

(viii) Emergency locks shall be large enough to hold an entire heading shift and a limit maintained of 12 p.s.i.g. There shall be a chamber available for oxygen decompression therapy to 28 p.s.i.g.

(ix) The man lock shall be large enough so that those using it are not compelled to be in a cramped position and shall not have less than 5 feet clear head room at the center and a minimum of 30 cubic feet of air space per occupant.

(x) Locks on caissons shall be so located that the bottom door shall be not less than 3 feet above the water level surrounding the caisson on the outside. (The water level, where it is affected by tides, is construed to mean high tide.)

(xi) In addition to the pressure gauge in the locks, an accurate pressure gauge shall be maintained on the outer and inner side of each bulkhead. These gauges shall be accessible at all times and shall be kept in accurate working order.

(xii) Man locks shall have an observation port at least 4 inches in diameter located in such a position that all occupants of the man lock may be observed from the working chamber and from the free air side of the lock.

(xiii) Adequate ventilation in the lock shall be provided.

(xiv) Man locks shall be maintained at a minimum temperature of 70°F.

(xv) When locks are not in use and employees are in the working chamber, lock doors shall be kept open to the working chamber, where practicable.

(xvi) Provision shall be made to allow for rescue parties to enter the tunnel if the working force is disabled.

(xvii) A special decompression chamber of sufficient size to accommodate the entire force of employees being decompressed at the end of a shift shall be provided whenever the regularly established working period requires total time of decompression exceeding 75 minutes.

(b) Special decompression chamber.

(i) The headroom in the special decompression chamber shall be not less than a minimum 7 feet and the cubical con-

tent shall provide at least 50 cubic feet of airspace for each employee. For each occupant, there shall be provided 4 square feet of free walking area and 3 square feet of seating space, exclusive of area required for lavatory and toilet facilities. The rated capacity shall be based on the stated minimum space per employee and shall be posted at the chamber entrance. The posted capacity shall not be exceeded, except in case of emergency.

(ii) Each special decompression chamber shall be equipped with the following:

(A) A clock or clocks suitably placed so that the attendant and the chamber occupants can readily ascertain the time;

(B) Pressure gauges which will indicate to the attendants and to the chamber occupants the pressure in the chamber;

(C) Valves to enable the attendant to control the supply and discharge of compressed air into and from the chamber.

(D) Valves and pipes, in connection with the air supply and exhaust, arranged so that the chamber pressure can be controlled from within and without;

(E) Effective means of oral intercommunication between the attendant, occupants of the chamber, and the air compressor plant; and

(F) An observation port at the entrance to permit observation of the chamber occupants.

(iii) Seating facilities in special decompression chambers shall be so arranged as to permit a normal sitting posture without cramping. Seating space, not less than 18 inches by 24 inches wide, shall be provided per occupant.

(iv) Adequate toilet and washing facilities, in a screened or enclosed recess, shall be provided. Toilet bowls shall have a built-in protector on the rim so that an air space is created when the seat lid is closed.

(v) Fresh and pure drinking water shall be available. This may be accomplished by either piping water into the special decompression chamber and providing drinking fountains, or by providing individual canteens, or by some other sanitary means. Community drinking vessels are prohibited.

(vi) No refuse or discarded material of any kind shall be permitted to accumulate, and the chamber shall be kept clean.

(vii) Unless the special decompression chamber is serving as the man lock to atmospheric pressure, the special decompression chamber shall be situated, where practicable, adjacent to the man lock on the atmospheric pressure side of the bulkhead. A passageway shall be provided, connecting the special chamber with the man lock, to permit employees in the process of decompression to move from the man lock to the special chamber without a reduction in the ambient pressure from that designated for the next stage of decompression. The passageway shall be so arranged as to not interfere with the normal operation of the man lock, nor with the release of the occupants of the special chamber to atmospheric pressure upon the completion of the decompression procedure.

(8) Compressor plant and air supply.

(a) At all times there shall be a thoroughly experienced, competent, and reliable person on duty at the air control valves as a gauge tender who shall regulate the pressure in the working areas. During tunneling operations, one gauge tender may regulate the pressure in not more than two headings: Provided; That the gauges and controls are all in one location. In caisson work, there shall be a gauge tender for each caisson.

(b) The low air compressor plant shall be of sufficient capacity to not only permit the work to be done safely, but shall also provide a margin to meet emergencies and repairs.

(c) Low air compressor units shall have at least two independent and separate sources of power supply and each shall be capable of operating the entire low air plant and its accessory systems.

(d) The capacity, arrangement, and number of compressors shall be sufficient to maintain the necessary pressure without overloading the equipment and to assure maintenance of such pressure in the working chamber during periods of breakdown, repair, or emergency.

(e) Switching from one independent source of power supply to the other shall be done periodically to ensure that workability of the apparatus in an emergency.

(f) Duplicate low-pressure air feedlines and regulating valves shall be provided between the source of air supply and a point beyond the locks with one of the lines extending to within 100 feet of the working face.

(g) All high-pressure and low-pressure air supply lines shall be equipped with check valves.

(h) Low-pressure air shall be regulated automatically. In addition, manually operated valves shall be provided for emergency conditions.

(i) The air intakes for all air compressors shall be located at a place where fumes, exhaust gases, and other air contaminants will be at a minimum.

(j) Gauges indicating the pressure in the working chamber shall be installed in the compressor building, the lock attendant's station, and at the employer's field office.

(9) Ventilation and air quality.

(a) Exhaust valves and exhaust pipes shall be provided and operated so that the working chamber shall be well ventilated, and there shall be no pockets of dead air. Outlets may be required at intermediate points along the main low-pressure air supply line to the heading to eliminate such pockets of dead air. The quantity of ventilation air shall be not less than 30 cubic feet per minute.

(b) The air in the workplace shall be analyzed by the employer not less than once each shift, and records of such tests shall be kept on file at the place where the work is in progress. The test results shall be within the threshold limit values specified in part B of this chapter, for hazardous gases, and within 10 percent of the lower explosive limit of flammable gases. If these limits are not met, immediate action to correct the situation shall be taken by the employer.

(c) The temperature of all working chambers which are subjected to air pressure shall, by means of after-coolers or other suitable devices, be maintained at a temperature not to exceed 85°F.

(d) Forced ventilation shall be provided during decompression. During the entire decompression period, forced ventilation through chemical or mechanical air purifying devices that will ensure a source of fresh air shall be provided.

(e) Whenever heat-producing machines (moles, shields) are used in compressed air tunnel operations, a positive means of removing the heat build-up at the heading shall be provided.

(10) Electricity.

(a) All lighting in compressed-air chambers shall be by electricity exclusively, and two independent electric-lighting systems with independent sources of supply shall be used. The emergency source shall be arranged to become automatically operative in the event of failure of the regularly used source.

(b) The minimum intensity of light on any walkway, ladder, stairway, or working level shall be not less than 10 foot-candles, and in all workplaces the lighting shall at all times be such as to enable employees to see clearly.

(c) All electrical equipment, and wiring for light and power circuits, shall comply with requirements of Part I, of this standard, for use in damp, hazardous, high temperature, and compressed air environments.

(d) External parts of lighting fixtures and all other electrical equipment, when within 8 feet of the floor, shall be constructed of noncombustible, nonabsorptive, insulating materials, except that metal may be used if it is effectively grounded.

(e) Portable lamps shall be equipped with noncombustible, nonabsorptive, insulating sockets, approved handles, basket guards, and approved cords.

(f) The use of worn or defective portable and pendant conductors is prohibited.

(11) Sanitation.

(a) Sanitary, heated, lighted, and ventilated dressing rooms and drying rooms shall be provided for all employees engaged in compressed air work. Such rooms shall contain suitable benches and lockers. Bathing accommodations (showers at the ratio of one to 10 employees per shift), equipped with running hot and cold water, and suitable and adequate toilet accommodations, shall be provided. One toilet for each 15 employees, or fractional part thereof, shall be provided.

(b) When the toilet bowl is shut by a cover, there should be an air space so that the bowl or bucket does not implode when pressure is increased.

(c) All parts of caissons and other working compartments shall be kept in a sanitary condition.

(12) Fire prevention and protection.

(a) Fire fighting equipment shall be available at all times and shall be maintained in working condition.

(b) While welding or flame-cutting is being done in compressed air, a firewatch with a fire hose or approved extinguisher shall stand by until such operation is completed.

(c) Shafts and caissons containing flammable material of any kind, either above or below ground, shall be provided with a waterline and a fire hose connected thereto, so arranged that all points of the shaft or caisson are within reach of the hose stream.

(d) Fire hose shall be at least 1 1/2 inches in nominal diameter; the water pressure shall at all times be adequate for efficient operation of the type of nozzle used; and the water supply shall be such as to ensure an uninterrupted flow. Fire hose, when not in use, shall be located or guarded to prevent injury thereto.

(e) The power house, compressor house, and all buildings housing ventilating equipment, shall be provided with at least one hose connection in the waterline, with a fire hose connected thereto. A fire hose shall be maintained within reach of structures of wood over or near shafts.

(f) Tunnels shall be provided with a 2-inch minimum diameter waterline extending into the working chamber and to within 100 feet of the working face. Such line shall have hose outlets with 100 feet of fire hose attached and maintained as follows: One at the working face; one immediately inside of the bulkhead of the working chamber; and one immediately outside such bulkhead. In addition, hose outlets shall be provided at 200-foot intervals throughout the length of the tunnel, and 100 feet of fire hose shall be attached to the outlet nearest to any location where flammable material is being kept or stored or where any flame is being used.

(g) In addition to fire hose protection required by this part, on every floor of every building not under compressed air, but used in connection with the compressed air work, there shall be provided at least one approved fire extinguisher of the proper type for the hazards involved. At least two approved fire extinguishers shall be provided in the working chamber as follows: One at the working face and one immediately inside the bulkhead (pressure side). Extinguishers in the working chamber shall use water as the primary extinguishing agent and shall not use any extinguishing agent which could be harmful to the employees in the working chamber. The fire extinguisher shall be protected from damage.

(h) Highly combustible materials shall not be used or stored in the working chamber. Wood, paper, and similar combustible material shall not be used in the working chamber in quantities which could cause a fire hazard. The compressor building shall be constructed of noncombustible material.

(i) Man locks shall be equipped with a manual type fire extinguisher system that can be activated inside the man lock and also by the outside lock attendant. In addition, a fire hose and portable fire extinguisher shall be provided inside and outside the man lock. The portable fire extinguisher shall be the dry chemical type.

Note: For additional requirements relating to portable fire extinguishers see WAC 296-800-300.

(j) Equipment, fixtures, and furniture in man locks and special decompression chambers shall be constructed of noncombustible materials. Bedding, etc., shall be chemically treated so as to be fire resistant.

(k) Head frames shall be constructed of structural steel or open frame-work fireproofed timber. Head houses and other temporary surface buildings or structures within 100 feet of the shaft, caisson, or tunnel opening shall be built of fire-resistant materials.

(l) No oil, gasoline, or other combustible materials shall be stored within 100 feet of any shaft, caisson, or tunnel opening, except that oils may be stored in suitable tanks in isolated fireproof buildings, provided such buildings are not less than 50 feet from any shaft, caisson, or tunnel opening, or any building directly connected thereto.

(m) Positive means shall be taken to prevent leaking flammable liquids from flowing into the areas specifically mentioned in the preceding subdivision.

(n) All explosives used in connection with compressed air work shall be selected, stored, transported, and used as specified in part T of this chapter.

(13) Bulkheads and safety screens.

(a) Intermediate bulkheads with locks, or intermediate safety screens or both, are required where there is danger of rapid flooding.

(b) In tunnels 16 feet or more in diameter, hanging walkways shall be provided from the face to the man lock as high in the tunnel as practicable, with at least 6 feet of head room. Walkways shall be constructed of noncombustible material. Standard railings shall be securely installed throughout the length of all walkways on open sides in accordance with Part K of this chapter. Where walkways are ramped under safety screens, the walkway surface shall be skidproofed by cleats or by equivalent means.

(c) Bulkheads used to contain compressed air shall be tested, where practicable, to prove their ability to resist the highest air pressure which may be expected to be used.

[Statutory Authority: RCW 49.17.010, [49.17].040, and [49.17].050. 01-17-033, § 296-155-745, filed 8/8/01, effective 9/1/01. Statutory Authority: RCW 49.17.040, [49.17.]050 and [49.17.]060. 96-24-051, § 296-155-745, filed 11/27/96, effective 2/1/97. Statutory Authority: Chapter 49.17 RCW. 95-10-016, § 296-155-745, filed 4/25/95, effective 10/1/95; 94-15-096 (Order 94-07), § 296-155-745, filed 7/20/94, effective 9/20/94; 88-23-054 (Order 88-25), § 296-155-745, filed 11/14/88; Order 74-26, § 296-155-745, filed 5/7/74, effective 6/6/74.]

WAC 296-155-74501 Appendix A—Decompression tables.

APPENDIX A—DECOMPRESSION TABLES

(1) **Explanation.** The decompression tables are computed for working chamber pressures from 0 to 14 pounds, and from 14 to 50 pounds per square inch gauge inclusive by 2-pound increments and for exposure times for each pressure extending from one-half to over 8 hours inclusive. Decompressions will be conducted by two or more stages with a maximum of four stages, the latter for a working chamber pressure of 40 pounds per square inch gauge or over.

Stage 1 consists of a reduction in ambient pressure ranging from 10 to a maximum of 16 pounds per square inch, but in no instance will the pressure be reduced below 4 pounds at the end of stage 1. This reduction in pressure in stage 1 will always take place at a rate not greater than 5 pounds per minute.

Further reduction in pressure will take place during stage 2 and subsequent stages as required at a slower rate, but in no event at a rate greater than 1 pound per minute.

Decompression Table No. 1 indicates in the body of the table the total decompression time in minutes for various combinations of working chamber pressure and exposure time.

Decompression Table No. 2 indicates for the same various combinations of working chamber pressure and exposure time the following:

(a) The number of stages required;

(b) The reduction in pressure and the terminal pressure for each required stage;

(c) The time in minutes through which the reduction in pressure is accomplished for each required stage;

(d) The pressure reduction rate in minutes per pound for each required stage;

Important note: The pressure reduction in each stage is accomplished at a uniform rate. Do not interpolate between values shown on the tables. Use the next higher value of working chamber pressure or exposure time should the actual working chamber pressure or the actual exposure time, respectively, fall between those for which calculated values are shown in the body of the tables.

Examples:

Example No. 1:

4 hours working period at 20 pounds gauge.

Decompression Table No. 1:

20 pounds for 4 hours, total decompression time. — 43 minutes.

Decompression Table No. 2:

Stage 1: Reduce pressure from 20 pounds to 4 pounds at the uniform rate of 5 pounds per minute.

Elapsed time stage 1: 16/5– — 3 minutes.

Stage 2 (final stage): Reduce pressure at a uniform rate from 4 pounds to 0-pound gage over a period of 40 minutes.

Rate—0.10 per pound per minute or 10 minutes per pound.

Stage 2 (final) elapsed time. — 40 minutes.

Total time . . . . . 43 minutes.

Example No. 2:

5-hour working period at 24 pounds gage.

Decompression Table No. 1:

24 pounds for 5 hours, total decompression time. — 117 minutes.

Decompression Table No. 2:

Stage 1: Reduce pressure from 24 pounds to 8 pounds at the uniform rate of 5 pounds per minute.

Elapsed time stage 1: 16/5 — 3 minutes.

Stage 2: Reduce pressure at a uniform rate from 8 pounds to 4 pounds over a period of 4 minutes. Rate, 1 pound per minute elapsed time, stage 2 . . . . . 4 minutes.

Transfer person to special decompression chamber maintaining the 4-pound pressure during the transfer operation.

Stage 3 (final stage): In the special decompression chamber, reduce the pressure at a uniform rate from 4 pounds to 0-pound gage over a period of 110 minutes. Rate, 0.037 pound per minute or 27.5 minutes per pound. Stage 3 (final) elapsed time . . . . . 110 minutes.

Total time . . . . . 117 minutes.

DECOMPRESSION TABLE NO. 1

TABLE DECOMPRESSION TIME

Work pressure	Working period hours										
p.s.i.g.	1/2	1	1 1/2	2	3	4	5	6	7	8	Over 8
0-12 . .	3	3	3	3	3	3	3	3	3	3	3
14	6	6	6	6	6	6	6	6	16	16	33
16	7	7	7	7	7	7	17	33	48	48	62
18	7	7	7	8	11	17	48	63	63	73	87
20	7	7	8	15	15	43	63	73	83	103	113
22	9	9	16	24	38	68	93	103	113	128	133
24	11	12	23	27	52	92	117	122	127	137	151
26	13	14	29	34	69	104	126	141	142	142	163
28	15	23	31	41	98	127	143	153	153	165	183
30	17	28	38	62	105	143	165	168	178	188	204
32	19	35	43	85	126	163	178	193	203	213	226
34	21	39	58	98	151	178	195	218	223	233	248
36	24	44	63	113	170	198	223	233	243	253	273
38	28	49	73	128	178	203	223	238	253	263	278
40	31	49	84	143	183	213	233	248	258	278	288
42	37	56	102	144	189	215	245	260	263	268	293
44	43	64	118	154	199	234	254	264	269	269	293
46	44	74	139	171	214	244	269	274	289	299	318
48	51	89	144	189	229	269	299	309	319	319	…
50	58	94	164	209	249	279	309	329	…	…	…

DECOMPRESSION TABLE NO. 2

(Do not interpolate, use next higher value for conditions not computed.)

Working chamber pressure P.s.i.g.	Working period Hours	Stage No.	Decompression data: Pressure reduction P.s.i.g. From	To	Time in stage Minutes Min/Pound	Pressure reduction rate	Total time decompress Minutes
14	1/2	1	14	4	2	0.20	6
		2	4	0	4	1.00	6
	1	1	14	4	2	0.20	6
		2	4	0	4	1.00	6
	1 1/2	1	14	4	2	0.20	6
		2	4	0	4	1.00	6
	2	1	14	4	2	0.20	6
		2	4	0	4	1.00	6
	3	1	14	4	2	0.20	6
		2	4	0	4	1.00	6
	4	1	14	0	2	0.20	6
		2	4	0	4	1.00	6
	5	1	14	4	2	0.20	6
		2	4	0	4	1.00	6
	6	1	14	4	2	0.20	
		2	4	0	4	1.00	6
	7	1	14	4	2	0.20	
		2	4	0	14	3.50	16
	8	1	14	4	2	0.20	
		2	4	0	14	3.50	16
	Over 8 . . .	1	14	4	2	0.20	
		2	4	0	30	7.50	32
16	1/2	1	16	4	3	0.20	
		2	4	0	4	1.00	7
	1	1	16	4	3	0.20	7
		2	4	0	4	1.00	7
	1 1/2	1	16	4	3	0.20	
		2	4	0	4	1.00	7
	2	1	16	4	3	0.20	
		2	4	0	4	1.00	7
	3	1	16	4	3	0.20	
		2	4	0	4	1.00	7
	4	1	14	4	3	0.20	
		2	4	0	4	1.00	7
	5	1	14	4		0.20	7
		2	4	0	4	3.50	17
	6	1	14	4	3	0.20	
		2	4	0	30	7.50	33
	7	1	14	4	3	0.20	
		2	4	0	45	11.25	48
	8	1	14	4	3	0.20	
		2	4	0	45	11.25	48
	Over 8 . . .	1	14	4	3	0.20	
		2	4	0	60	15.00	63
18	1/2	1	18	4	3	0.20	
		2	4	0	4	1.00	7
	1	1	18	4	3	0.20	
		2	4	0	4	1.00	7
	1 1/2	1	18	4	3	0.20	
		2	4	0	4	1.00	7
	2	1	18	4	3	0.20	
		2	4	0	5	1.25	8
	3	1	18	4	3	0.20	
		2	4	0	8	2.00	11
	4	1	18	4	3	0.20	
		2	4	0	14	3.50	17
	5	1	18	4	3	0.20	
		2	4	0	45	11.25	48
	6	1	18	4	3	0.20	
		2	4	0	60	15.00	63
	7	1	18	4	3	0.20	
		2	4	0	60	15.00	63
	8	1	18	4	3	0.20	
		2	4	0	70	17.50	73
	Over 8 . . .	1	18	4	3	0.20	
		2	4	0	84	21.00	87
20	1/2	1	20	4	3	0.20	
		2	4	0	4	1.00	7
	1	1	20	4	3	0.20	
		2	4	0	4	1.00	7
	1 1/2	1	20	4	3	0.20	
		2	4	0	5	1.25	8
	2	1	20	4	3	0.20	
		2	4	0	12	3.00	15
	3	1	20	4	3	0.20	
		2	4	0	12	3.00	15
	4	1	20	4	3	0.20	
		2	4	0	40	10.00	43
	5	1	20	4	3	0.20	
		2	4	0	60	15.00	63
	6	1	20	4	3	0.20	
		2	4	0	70	17.50	73
	7	1	20	4	3	0.20	
		2	4	0	80	20.00	83
	8	1	20	4	3	0.20	
		2	4	0	100	25.00	103
	Over 8 . . .	1	20	4	3	0.20	
		2	4	0	110	27.50	113
22	1/2	1	22	6	3	0.20	
		2	6	0	6	1.00	9
	1	1	22	6	3	0.20	
		2	6	0	6	1.00	9
	1 1/2	1	22	6	3	0.20	
		2	6	0	13	2.20	16
	2	1	22	6	3	0.20	
		2	6	0	21	3.50	24
	3	1	22	6	3	0.20	
		2	6	0	35	5.85	38
	4	1	22	6	3	0.20	
		2	6	0	65	10.83	68
	5	1	22	6	3	0.20	
		2	6	0	90	15.00	93
	6	1	22	6	3	0.20	
		2	6	0	100	16.67	103
	7	1	22	6	3	0.20	
		2	6	0	110	18.35	113
	8	1	22	6	3	0.20	
		2	6	0	125	20.80	128
	Over 8 . . .	1	22	6	3	0.20	

Working chamber pressure P.s.i.g.	Working period Hours	Stage No.	Decompression data: Pressure reduction P.s.i.g. From	To	Time in stage Minutes Min/Pound	Pressure reduction rate	Total time decompress Minutes
		2	6	0	130	21.70	133
24	1/2	1	24	8	3	0.20	
		2	8	4	4	1.00	
		3	4	0	4	1.00	11
	1	1	24	8	3	0.20	
		2	8	4	4	1.00	
		3	4	0	5	1.25	12
	1 1/2	1	24	8	3	0.20	
		2	8	4	4	1.00	
		3	4	0	16	4.00	23
	2	1	24	8	3	0.20	
		2	8	4	4	1.00	
		3	4	0	20	5.00	27
	3	1	24	8	3	0.20	
		2	8	4	4	1.00	
		3	4	0	45	11.25	52
	4	1	24	8	3	0.20	
		2	8	4	4	1.00	
		3	4	0	85	21.25	92
	5	1	24	8	3	0.20	
		2	8	4	4	1.00	
		3	4	0	110	27.50	117
	6	1	24	8	3	0.20	
		2	8	4	4	1.00	
		3	4	0	115	28.80	122
	7	1	24	8	3	0.20	
		2	8	4	4	1.00	
		3	4	0	120	30.00	127
	8	1	24	8	3	0.20	
		2	8	4	4	1.00	
		3	4	0	130	32.50	137
	Over 8 ...	1	24	8	3	0.20	
		2	8	4	8	2.00	
		3	4	0	140	35.00	151
26	1/2	1	26	10	3	0.20	
		2	10	4	6	1.00	
		3	4	0	4	1.00	13
	1	1	26	10	3	0.20	
		2	10	4	6	1.00	
		3	4	0	5	1.25	14
	1 1/2	1	26	10	3	0.20	
		2	10	4	6	1.00	
		3	4	0	20	5.00	29
	2	1	26	10	3	0.20	
		2	10	4	6	1.00	
		3	4	0	25	6.25	34
	3	1	26	10	3	0.20	
		2	10	4	6	1.00	
		3	4	0	60	15.00	69
	4	1	26	10	3	0.20	
		2	10	4	6	1.0	
		3	4	0	95	23.75	104
	5	1	26	10	3	0.20	
		2	10	4	8	1.33	
		3	4	0	115	28.80	126
	6	1	26	10	3	0.20	
		2	10	4	8	1.33	
		3	4	0	130	32.50	141
	7	1	26	10	3	0.20	
		2	10	4	9	1.50	
		3	4	0	130	32.50	142
	8	1	26	10	3	0.20	
		2	10	4	9	1.50	
		3	4	0	130	32.50	142
	Over 8 ...	1	26	10	3	0.20	
		2	10	4	30	5.00	
		3	4	0	130	32.50	163
28	1/2	1	28	12	3	0.20	
		2	12	4	8	1.00	
		3	4	0	4	1.00	15
	1	1	28	12	3	0.20	
		2	12	4	8	1.00	
		3	4	0	12	3.00	23
	1 1/2	1	28	12	3	0.20	
		2	12	4	8	1.00	
		3	4	0	20	5.00	31
	2	1	28	12	3	0.20	
		2	12	4	8	1.00	
		3	4	0	30	7.50	41
	3	1	28	12	3	0.20	
		2	12	4	10	1.25	
		3	4	0	85	21.20	98
	4	1	28	12	3	0.20	
		2	12	4	14	1.75	
		3	4	0	110	27.50	127
	5	1	28	12	3	0.20	
		2	12	4	20	2.50	
		3	4	0	120	30.00	143
	6	1	28	12	3	0.20	
		2	12	4	20	2.50	
		3	4	0	130	32.50	153
	7	1	28	12	3	0.20	
		2	12	4	20	2.50	
		3	4	0	130	32.50	153
	8	1	28	12	3	0.20	
		2	12	4	32	4.00	
		3	4	0	130	32.50	165
	Over 8 ...	1	28	12	3	0.20	
		2	12	4	50	6.25	
		3	4	0	130	32.50	183
30	1/2	1	30	14	3	0.20	
		2	14	4	10	1.00	
		3	4	0	4	1.00	17
	1	1	30	14	3	0.20	
		2	14	4	10	1.00	
		3	4	0	15	3.75	28
	1 1/2	1	30	14	3	0.20	
		2	14	4	10	1.00	
		3	4	0	25	6.25	38
	2	1	30	14	3	0.20	
		2	14	4	14	1.40	
		3	4	0	45	11.25	62
	3	1	30	14	3	0.20	
		2	14	4	17	1.70	
		3	4	0	85	21.20	105
	4	1	30	14	3	0.20	
		2	14	4	30	3.00	
		3	4	0	110	27.50	143
	5	1	30	14	3	0.20	
		2	14	4	35	3.50	
		3	4	0	130	32.50	165
	6	1	30	14	3	0.20	
		2	14	4	35	3.50	
		3	4	0	130	32.50	168
	7	1	30	14	3	0.20	
		2	14	4	45	4.50	
		3	4	0	130	32.50	178
	8	1	30	14	3	0.20	
		2	14	4	55	5.50	
		3	4	0	130	32.50	188
	Over 8 ...	1	30	14	3	0.20	
		2	14	4	71	7.10	
		3	4	0	130	32.50	204
32	1/2	1	32	16	3	0.20	
		2	16	4	12	1.00	
		3	4	0	4	1.00	19
	1	1	32	16	3	0.20	
		2	16	4	12	1.00	
		3	4	0	20	5.00	35
	1 1/2	1	32	16	3	0.20	

Working chamber pressure P.s.i.g.	Working period Hours	Stage No.	Decompression data: Pressure reduction P.s.i.g. From	To	Time in stage Minutes Min/Pound	Pressure reduction rate	Total time decompress Minutes
		2	16	4	15	1.25	
		3	4	0	25	6.25	43
	2	1	32	16	3	0.20	
		2	16	4	22	1.83	
		3	4	0	60	15.00	85
	3	1	32	16	3	0.20	
		2	16	4	28	2.33	
		3	4	0	95	23.75	126
	4	1	32	16	3	0.20	
		2	16	4	40	3.33	
		3	4	0	120	30.00	163
	5	1	32	16	3	0.20	
		2	16	4	45	3.75	
		3	4	0	130	32.50	178
	6	1	32	16	3	0.20	
		2	16	4	60	5.00	
		3	4	0	130	32.50	193
	7	1	32	16	3	0.20	
		2	16	4	70	5.83	
		3	4	0	130	32.50	203
	8	1	32	16	3	0.20	
		2	16	4	80	6.67	
		3	4	0	130	32.50	213
	Over 8 ...	1	32	16	3	0.20	
		2	16	4	93	7.75	
		3	4	0	130	32.50	226
34	1/2	1	34	18	3	0.20	
		2	18	4	14	1.00	
		3	4	0	4	1.00	21
	1	1	34	18	3	0.20	
		2	18	4	14	1.00	
		3	4	0	22	5.50	39
	1 1/2	1	34	18	3	0.20	
		2	18	4	25	1.80	
		3	4	0	30	7.50	58
	2	1	34	18	3	0.20	
		2	18	4	35	2.50	
		3	4	0	60	15.00	98
	3	1	34	18	3	0.20	
		2	18	4	43	3.10	
		3	4	0	105	26.25	151
	4	1	34	18	3	0.20	
		2	18	4	55	3.93	
		3	4	0	120	30.00	178
	5	1	34	18	3	0.20	
		2	18	4	62	4.43	
		3	4	0	130	32.50	195
	6	1	34	18	3	0.20	
		2	18	4	85	6.07	
		3	4	0	130	32.50	218
	7	1	34	18	3	0.20	
		2	18	4	90	6.43	
		3	4	0	130	32.50	223
	8	1	34	18	3	0.20	
		2	18	4	100	7.15	
		3	4	0	130	32.50	233
	Over 8 ...	1	34	18	3	0.20	
		2	18	4	115	8.23	
		3	4	0	130	32.50	248
36	1/2	1	36	20	3	0.20	
		2	20	4	16	1.00	
		3	4	0	5	1.25	24
	1	1	36	20	3	0.20	
		2	20	4	16	1.00	
		3	4	0	25	6.25	44
	1 1/2	1	36	20	3	0.20	
		2	20	4	30	1.88	
		3	4	0	30	7.50	63
	2	1	36	20	3	0.20	
		2	20	4	40	2.50	
		3	4	0	70	17.50	113
	3	1	36	20	3	0.20	
		2	20	4	52	3.25	
		3	4	0	115	28.75	170
	4	1	36	20	3	0.20	
		2	20	4	65	4.06	
		3	4	0	130	32.50	198
	5	1	36	20	3	0.20	
		2	20	4	90	5.63	
		3	4	0	130	32.50	223
	6	1	36	20	3	0.20	
		2	20	4	100	6.25	
		3	4	0	130	32.50	233
	7	1	36	20	3	0.20	
		2	20	4	110	6.88	
		3	4	0	130	32.50	243
	8	1	36	20	3	0.20	
		2	20	4	120	7.50	
		3	4	0	130	32.50	253
	Over 8 ...	1	36	20	3	0.20	
		2	20	4	140	8.75	
		3	4	0	130	32.50	273
38	1/2	1	38	22	3	0.20	
		2	22	6	16	1.00	
		3	6	0	9	1.50	28
	1	1	38	22	3	0.20	
		2	22	6	16	1.00	
		3	6	0	30	5.00	49
	1 1/2	1	38	22	3	0.20	
		2	22	6	20	1.25	
		3	6	0	50	8.34	73
	2	1	38	22	3	0.20	
		2	22	6	30	1.88	
		3	6	0	95	15.83	128
	3	1	38	22	3	0.20	
		2	22	6	35	2.19	
		3	6	0	140	23.35	178
	4	1	38	22	3	0.20	
		2	22	6	50	3.12	
		3	6	0	150	25.00	203
	5	1	38	22	3	0.20	
		2	22	6	55	3.44	
		3	6	0	165	27.50	223
	6	1	28	22	3	0.20	
		2	22	6	70	4.38	
		3	6	0	165	27.50	238
	7	1	38	22	3	0.20	
		2	22	6	85	5.32	
		3	6	0	165	27.50	253
	8	1	38	22	3	0.20	
		2	22	6	95	5.93	
		3	6	0	165	27.50	263
	Over 8 ...	1	38	22	3	0.20	
		2	22	6	110	6.88	
		3	6	0	165	27.50	278
40	1/2	1	40	24	3	0.20	
		2	24	8	16	1.00	
		3	8	4	4	1.00	
		4	4	0	8	2.00	31
	1	1	40	24	3	0.20	
		2	24	8	16	1.00	
		3	8	4	5	1.25	
		4	4	0	25	6.25	49
	1 1/2	1	40	24	3	0.20	
		2	24	8	16	1.00	
		3	8	4	20	5.00	
		4	4	0	45	11.25	84
	2	1	40	24	3	0.20	
		2	24	8	25	1.56	
		3	8	4	20	5.00	

Working chamber pressure P.s.i.g.	Working period Hours	Stage No.	Decompression data: Pressure reduction P.s.i.g. From	To	Time in stage Minutes Min/Pound	Pressure reduction rate	Total time decompress Minutes
		4	4	0	95	23.75	143
	3	1	40	24	3	0.20	
		2	24	8	30	1.88	
		3	8	4	30	7.50	
		4	4	0	120	30.00	183
	4	1	40	24	3	0.20	
		2	24	8	45	2.81	
		3	8	4	35	8.75	
		4	4	0	130	32.50	213
	5	1	40	24	3	0.20	
		2	24	8	47	2.94	
		3	8	4	53	13.25	
		4	4	0	130	32.50	233
	6	1	40	24	3	0.20	
		2	24	8	55	3.44	
		3	8	4	60	15.00	
		4	4	0	130	32.50	248
	7	1	40	24	3	0.20	
		2	24	8	65	4.06	
		3	8	4	60	15.00	
		4	4	0	130	32.50	258
	8	1	40	24	3	0.20	
		2	24	8	75	4.70	
		3	8	4	60	15.00	
		4	4	0	130	32.50	268
	Over 8 ...	1	40	24	3	0.20	
		2	24	8	95	5.93	
		3	8	4	60	15.00	
		4	4	0	130	32.50	288
42	1/2	1	42	26	3	0.20	
		2	26	10	16	1.00	
		3	10	4	6	1.00	
		4	4	0	12	3.00	37
	1	1	42	26	3	0.20	
		2	26	10	16	1.00	
		3	10	4	12	2.00	
		4	4	0	25	6.25	56
	1 1/2	1	42	26	3	0.20	
		2	26	10	16	1.00	
		3	10	4	23	3.83	
		4	4	0	60	15.00	102
	2	1	42	26	3	0.20	
		2	26	10	16	1.00	
		3	10	4	30	5.00	
		4	4	0	95	23.75	144
	3	1	42	26	3	0.20	
		2	26	10	16	1.00	
		3	10	4	50	8.34	
		4	4	0	120	30.00	189
	4	1	42	26	3	0.20	
		2	26	10	17	1.06	
		3	10	4	65	10.83	
		4	4	0	130	32.50	215
	5	1	42	26	3	0.20	
		2	26	10	27	1.69	
		3	10	4	85	14.18	
		4	4	0	130	32.50	245
	6	1	42	26	3	0.20	
		2	26	10	27	1.69	
		3	10	4	100	16.67	
		4	4	0	130	32.50	260
	7	1	42	26	3	0.20	
		2	26	10	30	1.88	
		3	10	4	100	16.67	
		4	4	0	130	32.50	263
	8	1	42	26	3	0.20	
		2	26	10	35	2.19	
		3	10	4	100	16.67	
		4	4	0	130	32.50	268
	Over 8 ...	1	42	26	3	0.20	
		2	26	10	60	3.75	
		3	10	4	100	16.67	
		4	4	0	130	32.50	293
44	1/2	1	44	28	3	0.20	
		2	28	12	16	1.00	
		3	12	4	8	1.00	
		4	4	0	16	4.00	43
	1	1	44	28	3	0.20	
		2	28	12	16	1.00	
		3	12	4	20	2.50	
		4	4	0	25	6.25	64
	1 1/2	1	44	28	3	0.20	
		2	28	12	16	1.00	
		3	12	4	27	3.38	
		4	4	0	72	18.00	118
	2	1	44	28	3	0.20	
		2	28	12	16	1.00	
		3	12	4	40	5.00	
		4	4	0	95	23.75	154
	3	1	44	28	3	0.20	
		2	28	12	16	1.00	
		3	12	4	60	7.50	
		4	4	0	120	30.00	199
	4	1	44	28	3	0.20	
		2	28	12	16	1.00	
		3	12	4	85	10.62	
		4	4	0	130	32.50	234
	5	1	44	28	3	0.20	
		2	28	12	16	1.00	
		3	12	4	105	13.13	
		4	4	0	130	32.50	254
	6	1	44	28	3	0.20	
		2	28	12	16	1.00	
		3	12	4	115	14.38	
		4	4	0	130	32.50	264
	7	1	44	28	3	0.20	
		2	28	12	16	1.00	
		3	12	4	120	15.00	
		4	4	0	130	32.50	269
	8	1	44	28	3	0.20	
		2	28	12	16	1.00	
		3	12	4	120	15.00	
		4	4	0	130	32.50	269
	Over 8 ...	1	44	28	3	0.20	
		2	28	12	40	2.50	
		3	12	4	120	15.00	
		4	4	0	130	32.50	293
46	1/2	1	46	30	3	0.20	
		2	30	14	16	1.00	
		3	14	4	10	1.00	
		4	4	0	15	3.75	44
	1	1	46	30	3	0.20	
		2	30	14	16	1.00	
		3	14	4	25	2.50	
		4	4	0	30	7.50	74
	1 1/2	1	46	30	3	0.20	
		2	30	14	16	1.00	
		3	14	4	35	3.50	
		4	4	0	85	21.20	139
	2	1	46	30	3	0.20	
		2	30	14	16	1.00	
		3	14	4	47	4.70	
		4	4	0	105	26.25	171
	3	1	46	30	3	0.20	
		2	30	14	16	1.00	
		3	14	4	65	6.50	
		4	4	0	130	32.50	214
	4	1	46	30	3	0.20	
		2	30	14	16	1.00	
		3	14	4	95	9.50	

Working chamber pressure P.s.i.g.	Working period Hours	Stage No.	Decompression data: Pressure reduction P.s.i.g. From	To	Time in stage Minutes Min/Pound	Pressure reduction rate	Total time decompress Minutes
		4	4	0	130	32.50	244
	5	1	46	30	3	0.20	
		2	30	14	16	1.00	
		3	14	4	120	12.00	
		4	4	0	130	32.50	269
	6	1	46	30	3	0.20	
		2	30	14	16	1.00	
		3	14	4	125	12.50	
		4	4	0	130	32.50	274
	7	1	46	30	3	0.20	
		2	30	14	16	1.00	
		3	14	4	140	14.00	
		4	4	0	130	32.50	289
	8	1	46	30	3	0.20	
		2	30	14	16	1.00	
		3	14	4	150	15.00	
		4	4	0	130	32.50	299
	Over 8 ...	1	46	30	3	0.20	
		2	30	14	25	1.56	
		3	14	4	160	16.00	
		4	4	0	130	32.50	318
48	1/2	1	48	32	3	0.20	
		2	32	16	16	1.00	
		3	16	4	12	1.00	
		4	4	0	20	5.00	51
	1	1	48	32	3	0.20	
		2	32	16	16	1.00	
		3	16	4	35	2.92	
		4	4	0	35	8.75	89
	1 1/2	1	48	32	3	0.20	
		2	32	16	16	1.00	
		3	16	4	45	3.75	
		4	4	0	80	20.00	144
	2	1	48	32	3	0.20	
		2	32	16	16	1.00	
		3	16	4	60	5.00	
		4	4	0	110	27.50	189
	3	1	48	32	3	0.20	
		2	32	16	16	1.00	
		3	16	4	90	7.50	
		4	4	0	120	30.00	229
	4	1	48	32	3	0.20	
		2	32	16	16	1.00	
		3	16	4	120	10.00	
		4	4	0	130	32.50	269
	5	1	48	32	3	0.20	
		2	32	16	16	1.00	
		3	16	4	140	11.67	
		4	4	0	130	32.50	299
	6	1	48	32	3	0.20	
		2	32	16	16	1.00	
		3	16	4	160	13.33	
		4	4	0	130	32.50	309
	7	1	48	32	3	0.20	
		2	32	16	16	1.00	
		3	16	4	170	14.17	
		4	4	0	130	32.50	319
	8	1	48	32	3	0.20	
		2	32	16	16	1.00	
		3	16	4	170	14.17	
		4	4	0	130	32.50	319
50	1/2	1	50	34	3	0.20	
		2	34	18	16	1.00	
		3	18	4	14	1.00	
		4	4	0	25	6.25	58
	1	1	50	34	3	0.20	
		2	34	18	16	1.00	
		3	18	4	40	2.86	
		4	4	0	35	8.75	94
	1 1/2	1	50	34	3	0.20	
		2	34	18	16	1.00	
		3	18	4	55	3.93	
		4	4	0	90	22.50	164
	2	1	50	34	3	0.20	
		2	34	18	16	1.00	
		3	18	4	70	5.00	
		4	4	0	120	30.00	209
	3	1	50	34	3	0.20	
		2	34	18	16	1.00	
		3	18	4	100	7.15	
		4	4	0	130	32.50	249
	4	1	50	34	3	0.20	
		2	34	18	16	1.00	
		3	18	4	130	8.58	
		4	4	0	130	32.50	279
	5	1	50	34	3	0.20	
		2	34	18	16	1.00	
		3	18	4	160	11.42	
		4	4	0	130	32.50	309
	6	1	50	34	3	0.20	
		2	34	18	16	1.00	
		3	18	4	180	12.85	
		4	4	0	130	32.50	329

[Statutory Authority: Chapter 49.17 RCW. 94-15-096 (Order 94-07), § 296-155-74501, filed 7/20/94, effective 9/20/94; Order 74-26, § 296-155-745 (part), Appendix A (codified as WAC 296-155-74501), filed 5/7/74, effective 6/6/74.]

PART R
MISCELLANEOUS CONSTRUCTION REQUIREMENTS

WAC 296-155-755 Roofing, insulating and waterproofing. (1) Roofers hoisting jack shall be constructed to withstand the contemplated load to be hoisted. The beam from counter balance point to heel of jack shall be at least 3/4 the length of the entire beam.

(2) Hoisting jack shall be counterweighted with a minimum of three times the contemplated maximum load to be lifted. Counterweight shall be securely fastened to heel of jack to prevent displacement, or the jack shall be fastened by means of lashing, bolting, or other means to prevent displacement.

(3) A steel collar or U-bolt and shackle on head of the hoisting jack shall be provided for attachment of pulley.

(4) Hoisting pulleys shall be of steel construction.

(5) Where materials are hoisted by hand the hoist line shall be not less than five-eighths manila rope, or the equivalent. Where machine hoist is used the hoist line shall be wire rope.

(6) Hoisting hooks shall be of cast or forged steel heavy enough to prevent straightening under a load.

(7) Workers shall not stand under load when material or hot asphalt is being hoisted.

(8) Hot asphalt shall be kept at a safe level in buckets for carrying and hoisting.

(9) Service buckets of hot asphalt shall not be carried up ladders by workers.

(10) Service buckets shall be standard safety bucket or flatbottom bucket with bails fastened to an offset ear firmly

riveted to side of bucket. There shall be a handle riveted near bottom of bucket for tipping purposes.

(11) Ladders shall extend at least 3 feet above the platform or roof served and shall be secured at top and bottom to prevent slipping.

(12) Safeguards shall be erected to prevent loads and lines contacting power lines where not possible to work in clear of power lines.

(13) Asphalt chunks shall not be thrown into hot tar pot, but shall be placed so as to prevent splashing of hot material.

(14) There shall be means to smother fires at fired tar pots.

(15) Mop or spud bar handles over three feet long shall be of wood or other nonconductive material.

(16) Persons working at kettles or handling hot tar shall, wear gloves and have arms fully protected.

(17) Open tar heating pots shall be kept outside of buildings.

Note: Electric type tar heating equipment may be used inside of the working enclosure provided that exhaust fans in connection with tubing, either rigid or flexible, capable of carrying fumes created by the heating process to the outside air are installed and in constant use during heating operations. The equipment should be provided with hinged lid or baffle plate for the purpose of immediate smothering of a pot fire.

(18) While hot tar is being applied inside an enclosure, exhaust fans to supplement natural ventilation shall be installed to expedite removal of gaseous fumes from the building.

(19) Flame heated tar pots shall be prohibited on roofs of structures.

(20) Tar pots shall have an attendant at all times while in operation.

[Order 74-26, § 296-155-755, filed 5/7/74, effective 6/6/74.]

WAC 296-155-765 Rock crushing, gravel washing, and hot mix plants. (1) Stationary dragline machines shall have all moving parts which are exposed to contact guarded with standard safeguards.

(a) All running lines, straps, etc., shall be regularly inspected and shall be changed when 10% of the wires in a 3 foot length are broken.

(b) Spars shall be properly guyed with a minimum of 5 top guys and where spar is over 50 feet in height, 3 buckle guys shall be used.

(c) A pass line shall be rigged on the spar to provide safe means of reaching top of spar.

(d) The head block shall be equipped with a safety strap attached to shell of the block and onto a guy wire leading away from the working area.

(2) Truck dump bunkers shall have wheel bumper block installed when dumping material from trucks.

(3) Substantial walkways and working platforms, equipped with toe boards and handrails shall be installed at all plants. Standard stairways and ladders shall be placed to reach all parts requiring oiling and maintenance.

(4) Plant structures shall be constructed to carry the required load, without material or structural failure, for the prescribed life of the material used.

(5) Bunker unloading devices shall be arranged to be operative from outside the walls of bunkers.

(6) Crusher operators and other employees working where hazardous dust or nuisance dust exists shall use approved respirators and goggles.

(7) All dusty rock crushing houses or other dusty places of employment, shall be equipped with means for controlling the dust.

(8) Cone type crushers shall be equipped with approved guards over or around the feed end to prevent rock from flying from crusher while in operation.

(9) All aggregate elevators, bucket or other type, shall have guards or barricades installed under or around return strand and of sufficient strength to sustain weight of piled up broken elevator equipment.

(10) All plant controls shall be placed so as to be readily accessible.

(11) Overhead conveyors shall be constructed so as to restrain the spillage of material. Wherever the hazard of falling materials exists, overhead protection shall be provided over walkways and roadways.

(12) Electrical equipment shall be installed and maintained to comply with the National Electrical Code.

(13) Exhaust fumes from internal combustion engines shall be discharged away from or above the working station.

(14) Hot mix plants, steam boilers and pressure vessels shall conform to A.S.M.E. Boiler and Pressure Vessel Codes and applicable rules and regulations of the department.

(15) All hot pipes exposed to contact shall be covered or otherwise guarded against contact.

(16) All oil tanks above ground shall be properly bedded and grounded.

(17) Oil leakage on the ground shall be cleaned up or covered with absorbent material.

(18) Mixer operators shall use approved respirator and goggles except when operating from a remote location.

(19) Dust and fume collection systems shall be provided on all installations. Dust and fumes shall be discharged back into plant or carried to a suitable distance from the work area and precipitated.

[Statutory Authority: RCW 49.17.040 and 49.17.050. 86-03-074 (Order 86-14), § 296-155-765, filed 1/21/86; Order 74-26, § 296-155-765, filed 5/7/74, effective 6/6/74.]

WAC 296-155-770 Moving of structures. (1) When structures are being raised, lowered, temporarily held in position or moved laterally, care shall be exercised to prevent the possibility of mishap.

(2) Weights to be moved shall be carefully computed and equipment furnished to provide a safety factor of five.

(3) Where excavations exist they shall be shored in compliance with Part N of this chapter.

(4) Cribbing and blocking shall be set on a level and firm foundation.

(5) Dollies and rollers shall be securely blocked except when structure is being moved by power equipment.

(6) Jacks shall comply with WAC 296-155-375 of this chapter.

(7) Provisions shall be made to maintain a minimum clearance of 10 feet from all electrical conductors with the following exceptions:

(a) When a representative of the owner of the electrical conductors is present and directs the handling of all said conductors.

(b) Where there shall be existing and/or erected mechanical barriers to prevent contact of structure or workers with said electrical conductors. Barriers shall be installed by or under the direction of the owners of the conductors.

(c) Where said electrical conductors have been de-energized and grounded by the owners of the conductors.

(d) By relocation of said electrical conductors by the owners of the conductors. The 10 foot requirement shall not be reduced by movement due to strains being imposed upon the conductors or the structures supporting the conductors or upon any fixtures or attachments thereon.

(8) When a structure is being lifted, shoring shall be provided at all times and be kept up to the object until the desired height is reached, and then it shall be blocked or cribbed immediately.

(9) Timbers must be in sound condition and of a size sufficient to maintain not more than one inch deflection for each 200 inches of unsupported span.

(10) The cross member used on the front dolly, or the fifth wheel on the truck, must be of construction and size to preclude any deflection. All floor joists of the building being moved must be firmly supported on either the running members or on the cross members, which in turn ride on or are firmly attached to the running members.

(11) When timbers are used as the cross member, a steel saddle or cradle shall be used which will distribute the load evenly over the cross members, which in turn ride on or are firmly attached to the running members.

(12) When timbers are used as the cross member, a steel saddle or cradle shall be used which will distribute the load evenly over the cross sectional area of said timber where the timber is supported over the dolly or fifth wheel. This saddle or cradle shall be equipped so as to be interchangeable on any standard fifth wheel when such operation is used. Cross members of any other material used on fifth wheel loading shall also be so equipped.

(13) When running members are secured to the lower side of the cross member supported by the fifth wheel or front dolly, the primary support shall be 3/4 inch steel bolts placed one on either side of each member and spaced from such members by 1/2 inch steel plate shaped to act as a template for placement on the top of the cross member and beneath the running member. 3/4 by 3" nuts shall be used to tighten the above described clamp in a secure fashion. A secondary binding of chain or cable with chain binder or jacks shall be used to securely fasten the running members to cross members.

Note: Chains or cables securely tightened can be used. A secondary chain or safety chain should also be used in the event that the main chain should snap.

(14) Safety chains shall be used between the running members and the towing truck to supplant the tow bar, and will be secured so as to preclude any possibility of the running timbers being pulled off the cross members on the truck or from the dollies.

(15) For the purpose of computing weights to determine the axle and tire loadings, the cubic volume of the building (length, width and height), including walls, floors and ceiling joists, shall be used, allowing five pounds per cubic foot. This method of computing weight shall be used to determine if larger equipment need be employed on any given move.

(16) When fastening structures to tractor, and runners are clamped to headers, steel chains or the equivalent shall be used. If steel chains are used, said chains shall be tightened by railroad jacks or the equivalent.

(17) All motor vehicles shall conform with motor vehicle laws of the state of Washington.

(18) A fifth wheel type suspension with two nonsteering dollies shall be acceptable for moving buildings which do not exceed 46 feet in length. Permission to move larger structures with this type of suspension shall be obtained from the department.

(19) Pushing from the rear shall be prohibited unless a system of signals is used to control the driver.

(20) Blocks capable of holding the unit being moved shall be carried, and in case of winching operations, shall be kept close to the downhill side of the wheel of each dolly to prevent a runaway should the cable slip.

[Order 74-26, § 296-155-770, filed 5/7/74, effective 6/6/74.]

PART S
DEMOLITION

WAC 296-155-775 Preparatory operations. (1) Prior to permitting employees to start demolition operations, an engineering survey shall be made, by a competent person, of the structure to determine structural integrity and the possibility of unplanned collapse of any portion of the structure. Any adjacent structure where employees may be exposed shall also be similarly checked. The employer shall have in writing, evidence that such a survey has been performed.

(2) A copy of the survey report and of the plans and/or methods of operations shall be maintained at the job site for the duration of the demolition operation.

(3) Any device or equipment such as scaffolds, ladders, derricks, hoists, etc., used in connection with demolition work shall be constructed, installed, inspected, maintained and operated in accordance with the regulations governing the construction, installation, inspection, maintenance and operation of such device or equipment as specified in other parts of this chapter.

(4) Federal and state codes, safety standards, rules, regulations, and ordinances governing any and all phases of demolition work shall be observed at all times.

(5) Demolition of all buildings and structures shall be conducted under competent supervision, and safe working conditions shall be afforded the employees.

(6) When employees are required to work within a structure to be demolished which has been damaged by fire, flood, explosion, or other cause, the walls or floor shall be shored or braced.

(7) All electric, gas, water, steam, sewer, and other service lines shall be shut off, capped, or otherwise controlled, outside the building line before demolition work is started. In each case, any utility company which is involved shall be notified in advance.

(8) If it is necessary to maintain any power, water or other utilities during demolition, such lines shall be temporarily relocated, as necessary, and protected.

(9) It shall be determined whether asbestos, hazardous materials, hazardous chemicals, gases, explosives, flammable materials, or similarly dangerous substances are present at the work site. When the presence of any such substance is apparent or suspected, testing and removal or purging shall be performed and the hazard eliminated before demolition is started. Removal of such substances shall be in accordance with the requirements of chapters 296-62 and 296-65 WAC.

(10) Where a hazard exists from fragmentation of glass, such hazards shall be removed.

(11) Where a hazard exists to employees falling through wall openings, the opening shall be protected to a height of between thirty-six and forty-two inches.

(12) When debris is dropped without the use of chutes, the area onto which the material is dropped shall be completely enclosed with barricades not less than forty-two inches high and not less than twenty feet back from the projected edge of the opening above. Signs, warning of the hazard of falling materials, shall be posted at each level. Removal shall not be permitted in this lower area until debris handling ceases above.

(13) All floor openings, not used as material drops, shall be covered over with material substantial enough to support the weight of any load which may be imposed. Such material shall be properly secured to prevent its accidental movement.

(14) Except for the cutting of holes in floors for chutes, holes through which to drop materials, preparation of storage space, and similar necessary preparatory work, the demolition of exterior walls and floor construction shall begin at the top of the structure and proceed downward. Each story of exterior wall and floor construction shall be removed and dropped into the storage space before commencing the removal of exterior walls and floors in the story next below.

(15) Workers shall not be permitted to carry on a demolition operation which will expose persons working on a lower level to danger.

(16) Employee entrances to multistory structures being demolished shall be completely protected by sidewalk sheds or canopies, or both, providing protection from the face of the building for a minimum of eight feet. All such canopies shall be at least two feet wider than the building entrances or openings (one foot wider on each side thereof), and shall be capable of sustaining a load of one hundred fifty pounds per square foot.

(17) Protruding nails in boards, planks and timber shall be withdrawn, driven in or bent over as soon as the same is removed from the structure being demolished.

(18) Any material to be removed which will cause dust to be formed, shall be sprinkled with water to lay the dust incidental to its removal.

[Statutory Authority: Chapter 49.17 RCW. 94-15-096 (Order 94-07), § 296-155-775, filed 7/20/94, effective 9/20/94; 87-24-051 (Order 87-24), § 296-155-775, filed 11/30/87. Statutory Authority: RCW 49.17.050(2) and 49.17.040. 87-10-008 (Order 87-06), § 296-155-775, filed 4/27/87. Statutory Authority: RCW 49.17.040 and 49.17.050. 86-03-074 (Order 86-14), § 296-155-775, filed 1/21/86; Order 74-26, § 296-155-775, filed 5/7/74, effective 6/6/74.]

WAC 296-155-780 Stairs, passageways, and ladders. (1) Only those stairways, passageways, and ladders, designated as means of access to the structure of building, shall be used. Other access ways shall be entirely closed off at all times.

(2) All stairs, passageways, ladders and incidental equipment thereto, which are covered by this section, shall be periodically inspected and maintained in a clean safe condition.

(3) All ladders shall be secured in position.

(4) In a multistory building, when a stairwell is being used, it shall be properly illuminated by either natural or artificial means, and completely and substantially covered over at a point not less than two floors below the floor on which work is being performed. Access to the floor where the work is in progress shall be through a properly lighted, protected, and separate passageway.

[Order 74-26, § 296-155-780, filed 5/7/74, effective 6/6/74.]

WAC 296-155-785 Chutes. (1) No material shall be dropped to any point lying outside the exterior walls of the structure unless the area is effectively protected.

(2) All materials chutes, or sections thereof, at an angle of more than 45° from the horizontal, shall be entirely enclosed, except for openings equipped with closures at or about floor level for the insertion of materials. The openings shall not exceed 48 inches in height measured along the wall of the chute. At all stories below the top floor, such openings shall be kept closed when not in use.

(3) A substantial gate shall be installed in each chute at or near the discharge end. A competent employee shall be assigned to control the operation of the gate, and the backing and loading of trucks.

(4) When operations are not in progress, the area surrounding the discharge end of a chute shall be securely closed off.

(5) Any chute opening, into which workers dump debris, shall be protected by a substantial guardrail between 36 and 42 inches above the floor or other surface on which the employees stand to dump the material. Any space between the chute and the edge of openings in the floors through which it passes shall be solidly covered over.

(6) Where the material is dumped from mechanical equipment or wheelbarrows, a securely attached toeboard or bumper, not less than 4 inches thick and 6 inches high, shall be provided at each chute opening.

(7) Chutes shall be designed and constructed of such strength as to eliminate failure due to impact of materials or debris loaded therein.

[Statutory Authority: Chapter 49.17 RCW. 94-15-096 (Order 94-07), § 296-155-785, filed 7/20/94, effective 9/20/94; Order 74-26, § 296-155-785, filed 5/7/74, effective 6/6/74.]

WAC 296-155-790 Removal of materials through floor openings. Any openings cut in a floor for the disposal of materials shall be no larger in size than 25 percent of the aggregate of the total floor area, unless the lateral supports of the removed flooring remain in place. Floors weakened or otherwise made unsafe by demolition operations shall be shored to carry safely the intended imposed load from demolition operations.

[Order 74-26, § 296-155-790, filed 5/7/74, effective 6/6/74.]

WAC 296-155-795 Removal of walls, masonry sections, and chimneys. (1) Masonry walls, or other sections of masonry, shall not be permitted to fall upon the floors of the building in such masses as to exceed the safe carrying capacities of the floors.

(2) No wall section, which is more than one story in height, shall be permitted to stand alone without lateral bracing, unless such wall was originally designed and constructed to stand without such lateral support, and is in a condition safe enough to be self-supporting. All walls shall be left in a stable condition at the end of each shift.

(3) Employees shall not be permitted to work on the top of a wall when weather conditions constitute a hazard.

(4) Structural or load-supporting members on any floor shall not be cut or removed until all stories above such a floor have been demolished and removed. This provision shall not prohibit the cutting of floor beams for the disposal of materials or for the installation of equipment, provided that the requirements of WAC 296-155-790 and 296-155-800 are met.

(5) Floor openings within 10 feet of any wall being demolished shall be planked solid, except when employees are kept out of the area below.

(6) In buildings of "skeleton-steel" construction, the steel framing may be left in place during the demolition of masonry. Where this is done, all steel beams, girders, and similar structural supports shall be cleared of all loose material as the masonry demolition progresses downward.

(7) Walkways or ladders shall be provided to enable employees to safely reach or leave any scaffold or wall.

(8) Walls, which serve as retaining walls to support earth or adjoining structures, shall not be demolished until such earth has been properly braced or adjoining structures have been properly underpinned.

(9) Walls, which are to serve as retaining walls against which debris will be piled, shall not be so used unless capable of safely supporting the imposed load.

[Order 74-26, § 296-155-795, filed 5/7/74, effective 6/6/74.]

WAC 296-155-800 Manual removal of floors. (1) Openings cut in a floor shall extend the full span of the arch between supports.

(2) Before demolishing any floor arch, debris and other material shall be removed from such arch and other adjacent floor area. Planks not less than 2 inches by 10 inches in cross section, full size undressed, shall be provided for, and shall be used by employees to stand on while breaking down floor arches between beams. Such planks shall be so located as to provide a safe support for the workers should the arch between the beams collapse. The open space between planks shall not exceed 16 inches.

(3) Safe walkways, not less than 18 inches wide, formed of planks not less than 2 inches thick if wood, or of equivalent strength if metal, shall be provided and used by workers when necessary to enable them to reach any point without walking upon exposed beams.

(4) Stringers of ample strength shall be installed to support the flooring planks, and the ends of such stringers shall be supported by floor beams or girders, and not by floor arches alone.

(5) Planks shall be laid together over solid bearings with the ends overlapping at least 1 foot.

(6) When floor arches are being removed, employees shall not be allowed in the area directly underneath, and such an area shall be barricaded to prevent access to it.

(7) Demolition of floor arches shall not be started until they, and the surrounding floor area for a distance of 20 feet, have been cleared of debris and any other unnecessary materials.

[Statutory Authority: Chapter 49.17 RCW. 94-15-096 (Order 94-07), § 296-155-800, filed 7/20/94, effective 9/20/94; Order 74-26, § 296-155-800, filed 5/7/74, effective 6/6/74.]

WAC 296-155-805 Removal of walls, floors, and material with equipment. (1) Mechanical equipment shall not be used on floors or working surfaces unless such floors or surfaces are of sufficient strength to support the imposed load.

(2) Floor openings shall have curbs or stop-logs to prevent equipment from running over the edge.

(3) Mechanical equipment used shall meet the requirements specified in parts L and M of this chapter.

[Order 74-26, § 296-155-805, filed 5/7/74, effective 6/6/74.]

WAC 296-155-810 Catch platforms. (1) During the demolition of the exterior walls of a structure originally more than seventy feet high, catch platforms shall be erected along the exterior faces of such walls where necessary to prevent injury to persons working below.

(2) Such catch platforms shall be constructed and maintained not more than three stories below the story from which the exterior walls are being removed, until the demolition has progressed to within three stories of the ground level.

(3) Catch platforms shall not be less than five feet in width measured in a horizontal distance from the face of the structure and constructed of outriggers and planks. Planks shall be laid tight together and without openings between the planks and the wall.

Note: Catch platforms may be constructed of other approved materials of equal strength and security against falling material.

(4) Catch platforms shall be capable of sustaining a uniform live load of not less than one hundred and twenty-five pounds per square foot.

[Order 74-26, § 296-155-810, filed 5/7/74, effective 6/6/74.]

WAC 296-155-815 Storage. (1) The storage of waste material and debris on any floor shall not exceed the allowable floor loads.

(2) In buildings having wooden floor construction, the flooring boards may be removed from not more than one floor above grade to provide storage space for debris, provided falling material is not permitted to endanger the stability of the structure.

(3) When wood floor beams serve to brace interior walls or free-standing exterior walls, such beams shall be left in place until other equivalent support can be installed to replace them.

(4) Floor arches, to an elevation of not more than 25 feet above grade, may be removed to provide storage area for

debris: Provided, That such removal does not endanger the stability of the structure.

(5) Storage space into which material is dumped shall be blocked off, except for openings necessary for the removal of material. Such openings shall be kept closed at all times when material is not being removed.

[Order 74-26, § 296-155-815, filed 5/7/74, effective 6/6/74.]

WAC 296-155-820 Removal of steel construction. (1) When floor arches have been removed, planking in accordance with WAC 296-155-800(2) shall be provided for the workers engaged in razing the steel framing.

(2) Cranes, derricks, and other hoisting equipment used shall meet the requirements specified in part L of this chapter.

(3) Steel construction shall be dismantled column length by column length, and tier by tier (columns may be in two-story lengths).

(4) Any structural member being dismembered shall not be overstressed.

[Order 74-26, § 296-155-820, filed 5/7/74, effective 6/6/74.]

WAC 296-155-825 Mechanical demolition. (1) No workers shall be permitted in any area, which can be adversely affected by demolition operations, when balling or clamming is being performed. Only those workers necessary for the performance of the operations shall be permitted in this area at any other time.

(2) The weight of the demolition ball shall not exceed 50 percent of the crane's rated load, based on the length of the boom and the maximum angle of operation at which the demolition ball will be used, or it shall not exceed 25 percent of the nominal breaking strength of the line by which it is suspended, whichever results in a lesser value.

(3) The crane boom and loadline shall be as short as possible.

(4) The ball shall be attached to the loadline with a swivel-type connection to prevent twisting of the loadline, and shall be attached by positive means in such manner that the weight cannot become accidentally disconnected.

(5) When pulling over walls or portions thereof, all steel members affected shall have been previously cut free.

(6) All roof cornices or other such ornamental stonework shall be removed prior to pulling walls over.

(7) During demolition, continuing inspections by a competent person shall be made as the work progresses to detect hazards resulting from weakened or deteriorated floors, or walls, or loosened material. No employee shall be permitted to work where such hazards exist until they are corrected by shoring, bracing, or other effective means.

[Order 74-26, § 296-155-825, filed 5/7/74, effective 6/6/74.]

WAC 296-155-830 Selective demolition by explosives. Selective demolition by explosives shall comply with chapter 296-52 WAC.

[Statutory Authority: RCW 49.17.040 and 49.17.050. 86-03-074 (Order 86-14), § 296-155-830, filed 1/21/86; Order 74-26, § 296-155-830, filed 5/7/74, effective 6/6/74.]

PART U
POWER DISTRIBUTION AND TRANSMISSION LINES

Refer to chapter 296-45 WAC, "Safety standards for electrical workers."

PART V
ROLLOVER PROTECTIVE STRUCTURES AND OVERHEAD PROTECTION

WAC 296-155-950 Rollover protective structures (ROPS) for material handling equipment. (1) Coverage.

(a) This section applies to the following types of material handling equipment: To all rubber-tired, self-propelled scrapers, rubber-tired front-end loaders, rubber-tired dozers, wheel-type agricultural and industrial tractors, crawler tractors, crawler-type loaders, and motor graders, with or without attachments, that are used in construction work. This requirement does not apply to sideboom pipelaying tractors.

(b) The promulgation of specific standards for rollover protective structures for compactors and rubber-tired skid-steer equipment is reserved pending consideration of standards currently being developed.

(2) Equipment manufactured on or after September 1, 1972, Material handling machinery described in subsection (1) of this section and manufactured on or after September 1, 1972, shall be equipped with rollover protective structures which meet the minimum performance standards prescribed in WAC 296-155-955 and 296-155-960, as applicable.

(3) Equipment manufactured before September 1, 1972.

(a) All material handling equipment described in subsection (1) of this section and manufactured or placed in service (owned or operated by the employer) prior to September 1, 1972, shall be fitted with rollover protective structures.

Machines manufactured before July 1, 1969; Reserved pending further study, development, and review.

(b) Rollover protective structures and supporting attachment shall meet the minimum performance criteria detailed in WAC 296-155-955 and 296-155-960, as applicable or shall be designed, fabricated, and installed in a manner which will support, based on the ultimate strength of the metal, at least two times the weight of the prime mover applied at the point of impact.

(i) The design objective shall be to minimize the likelihood of a complete overturn and thereby minimize the possibility of the operator being crushed as a result of a rollover or upset.

(ii) The design shall provide a vertical clearance of at least 52 inches from the work deck to the ROPS at the point of ingress or egress.

(4) Remounting. ROPS removed for any reason, shall be remounted with equal quality, or better, bolts or welding as required for the original mounting.

(5) Labeling. Each ROPS shall have the following information permanently affixed to the structure:

(a) Manufacturer or fabricator's name and address;

(b) ROPS model number, if any;

(c) Machine make, model, or series number that the structure is designed to fit.

(6) Machines meeting certain existing governmental requirements. Any machine in use, equipped with rollover

protective structures, shall be deemed in compliance with this section if it meets the rollover protective structures requirements of the U.S. Army Corps of Engineers, or the Bureau of Reclamation of the U.S. Department of the Interior in effect on April 5, 1972. The requirements in effect are:

(a) U.S. Army Corps of Engineers: General Safety Requirements, EM-385-1-1 (March 1967).

(b) Bureau of Reclamation, U.S. Department of the Interior: Safety and Health Regulations for Construction, Part II (September 1971).

(7) ROPS meeting the criteria set forth in SAE J1040 a and SAE J1040 b shall be regarded as substantially meeting the requirements of this section, even if they do not meet all the criteria set forth in earlier criteria documents on which the present standard is based.

[Statutory Authority: Chapter 49.17 RCW. 91-03-044 (Order 90-18), § 296-155-950, filed 1/10/91, effective 2/12/91. Statutory Authority: RCW 49.17.040 and 49.17.050. 86-03-074 (Order 86-14), § 296-155-950, filed 1/21/86; Order 76-29, § 296-155-950, filed 9/30/76; Order 74-26, § 296-155-950, filed 5/7/74, effective 6/6/74.]

WAC 296-155-955 Minimum performance criteria for rollover protective structures for designated scrapers, loaders, dozers, graders, and crawler tractors. (1) Definitions. For purposes of this section, "vehicle weight" means the manufacturer's maximum weight of the prime mover for rubber-tired self-propelled scrapers. For other types of equipment to which this section applies, "vehicle weight" means the manufacturer's maximum recommended weight of the vehicle plus the heaviest attachment.

(2) General.

(a) This section prescribes minimum performance criteria for rollover protective structures (ROPS) for rubber-tired self-propelled scrapers; rubber-tired front-end loaders and rubber-tired dozers; crawler tractors, and crawler-type loaders, and motor graders. The vehicle and ROPS as a system shall have the structural characteristics prescribed in subsection (7) of this section for each type of machine described in this subsection.

(b) Equipment listed in subsection (2)(a) of this section may be exempted from the requirements for fitment of ROPS where it can be shown, to the satisfaction of the department, that the equipment will only be used where no rollover hazard will exist.

(3) The static laboratory test prescribed herein will determine the adequacy of the structures used to protect the operator under the following conditions:

(a) For rubber-tired self-propelled scrapers, rubber-tired front-end loaders, and rubber-tired dozers: Operating between 0 and 10 miles per hour over hard clay where rollover would be limited to a maximum roll angle of 360° down a slope of 30° maximum.

(b) For motor graders: Operating between 0 and 10 miles per hour over hard clay where rollover would be limited to 360° down a slope of 30° maximum.

(c) For crawler tractors and crawler-type loaders: Operating between 0 and 10 miles per hour over hard clay where rollover would be limited to a maximum roll angle of 360° down a slope of 45°.

(4) Facilities and apparatus.

(a) The following material is necessary:

(i) Material, equipment, and tiedown means adequate to ensure that the ROPS and its vehicle frame absorb the applied energy.

(ii) Equipment necessary to measure and apply loads to the ROPS. Adequate means to measure deflection and lengths should also be provided.

(iii) Recommended, but not mandatory, types of test setups are illustrated in Figure V-1 for all types of equipment to which this section applies; and in Figure V-2 for rubber-tired self-propelled scrapers; Figure V-3 for rubber-tired front-end loaders, rubber-tired dozers, and motor graders; and Figure V-4 for crawler tractors and crawler-type loaders.

(b) Table V-1 contains a listing of the required apparatus for all types of equipment described in subsection (2)(a) of this section.

TABLE V-1

Means to measure	Accuracy
Deflection of ROPS, inches	± 5% of deflection measured.
Vehicle weight, pounds	± 5% of the weight measured.
Force applied to frame, pounds	± 5% of force measured.
Dimensions of critical zone, inches.	± 0.5 in.

(5) Vehicle condition. The ROPS to be tested must be attached to the vehicle structure in the same manner as it will be attached during vehicle use. A totally assembled vehicle is not required. However, the vehicle structure and frame which support the ROPS must represent the actual vehicle installation. All normally detachable windows, panels, or nonstructural fittings shall be removed so that they do not contribute to the strength of the ROPS.

(6) Test procedure. The test procedure shall include the following, in the sequence indicated:

(a) Energy absorbing capabilities of ROPS shall be verified when loaded laterally by incrementally applying a distributed load to the longitudinal outside top member of the ROPS, as shown in Figure V-1, V-2 or V-3 as applicable. The distributed load must be applied so as to result in approximately uniform deflection of the ROPS. The load increments should correspond with approximately 0.5 in. ROPS deflection increment in the direction of the load application, measured at the ROPS top edge. Should the operator's seat be off center, the load shall be applied on the off center side. For each applied load increment, the total load (lb.) versus corresponding deflection (in.) shall be plotted, and the area under the load-deflection curve shall be calculated. This area is equal to the energy (in.-lb.) absorbed by the ROPS. For a typical load-deflection curve and calculation method, see Figure V-5.

Incremental loading shall be continued until the ROPS has absorbed the amount of energy and the minimum applied load specified under subsection (7) of this section has been reached or surpassed.

(b) To cover the possibility of the vehicle coming to rest on its top, the support capability shall be verified by applying a distributed vertical load to the top of the ROPS so as to result in approximately uniform deflection (see Figure V-1).

The load magnitude is specified in subsection (7)(b)(iii) of this section.

(c) The low temperature impact strength of the material used in the ROPS shall be verified by suitable material tests or material certification (see subsection (7)(b)(iv) of this section).

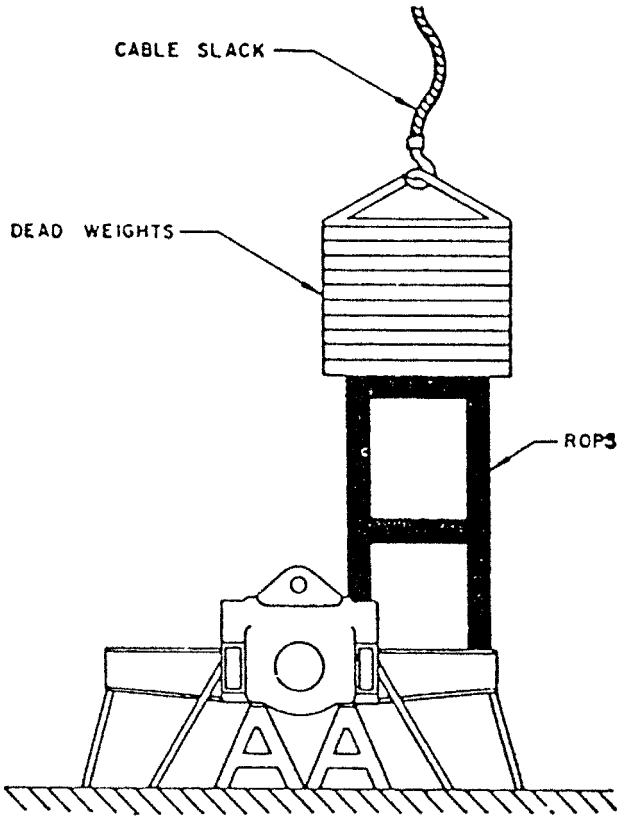

FIGURE V-1
Vertical loading setup for all types of equipment described in WAC 296-155-955(1).

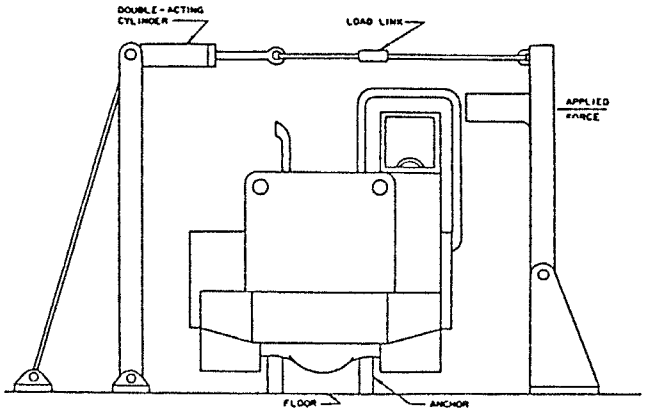

FIGURE V-2
Test setup for rubber-tired self-propelled scrapers.

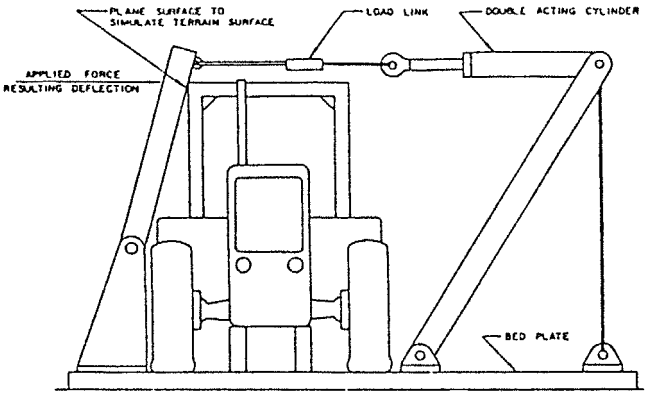

FIGURE V-3
Test setup for rubber-tired front-end loaders, rubber-tired dozers, and motor graders.

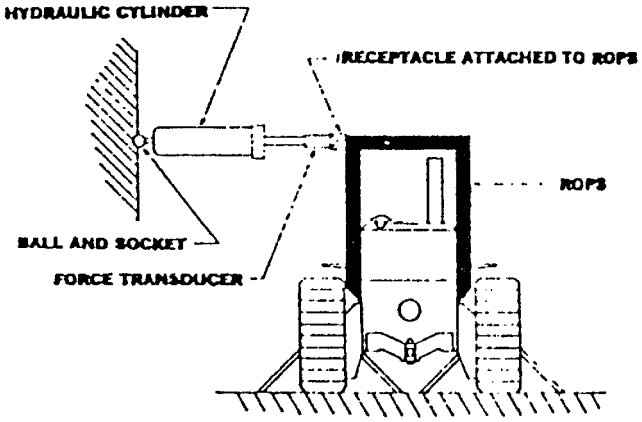

FIGURE V-4

Side-loading setup for crawler tractors and crawler loaders.

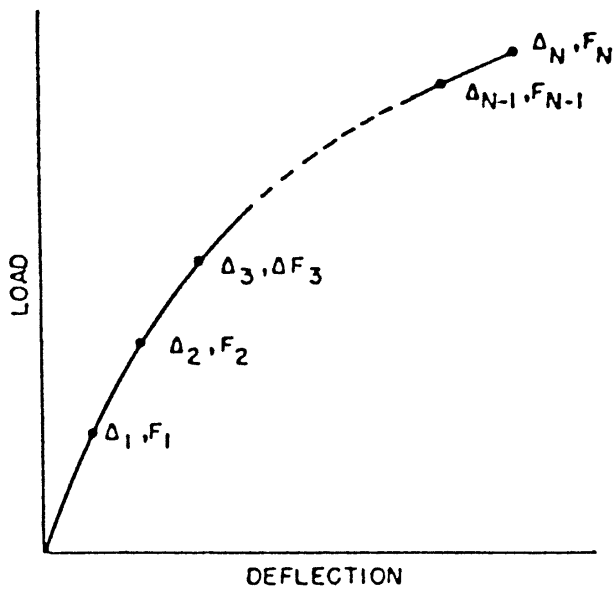

Δ - TOTAL DEFLECTION

F - FORCE APPLIED

$$\text{AREA} = \frac{\Delta_1 F_1}{2} + (\Delta_2 - \Delta_1)\frac{F_1 + F_2}{2} + (\Delta_3 - \Delta_2)\frac{F_2 + F_3}{2} + \cdots + (\Delta_N - \Delta_{N-1})\frac{F_{N-1} + F_N}{2}$$

FIGURE V-5

Determination of energy area under force deflection curve for all types of ROPS equipment defined in WAC 296-155-955.

(7) Performance requirements.

(a) General performance requirements.

(i) No repairs or straightening of any member shall be carried out between each prescribed test.

(ii) During each test, no part of the ROPS shall enter the critical zone as detailed in SAE J397 (1969). Deformation of the ROPS shall not allow the plane of the ground to enter this zone.

(b) Specific performance requirements.

(i) The energy requirement for purposes of meeting the requirements of subsection (6)(a) of this section is to be determined by referring to the plot of the energy versus weight of vehicle (see Figure V-6 for rubber-tired self-propelled scrapers; Figure V-7 for rubber-tired front-end loaders and rubber-tired dozers; Figure V-8 for crawler tractors and crawler-type loaders; and Figure V-9 for motor graders. For purposes of this section, force and weight are measured as pounds; energy (U) is measured as inch-pounds).

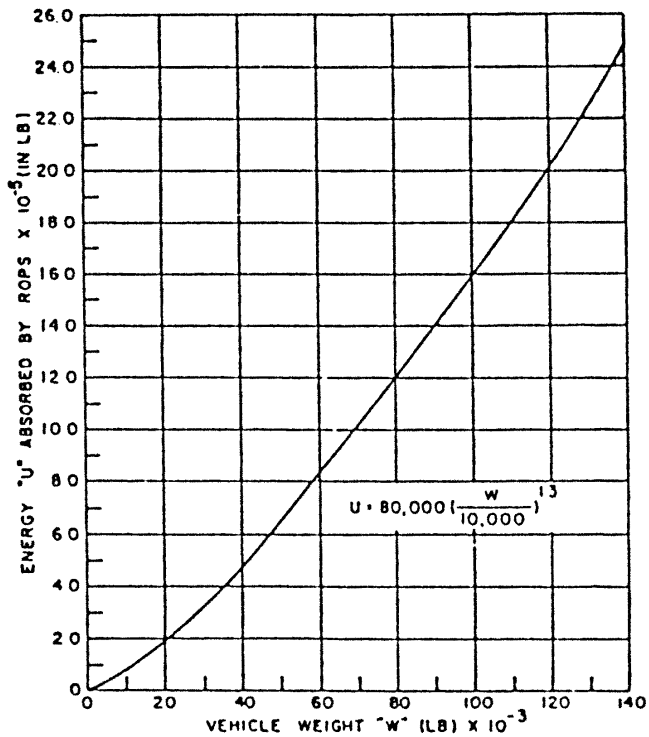

FIGURE V-6

Energy absorbed versus vehicle weight.

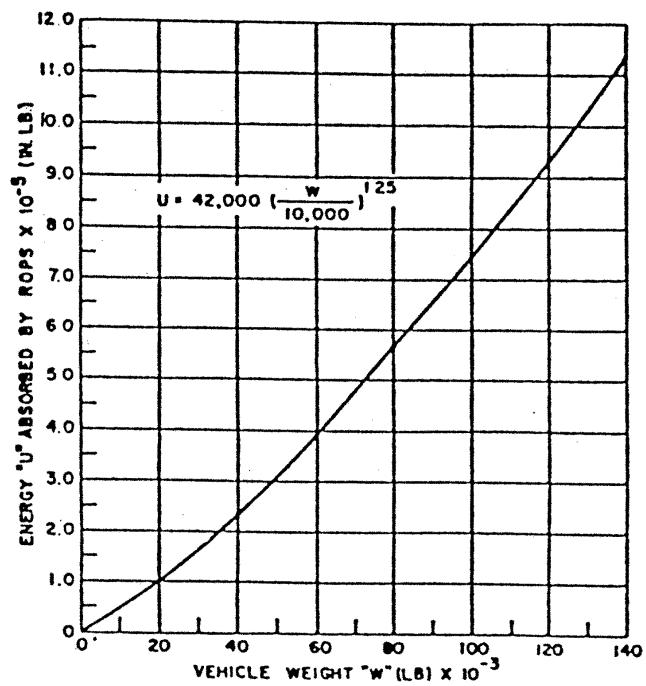

FIGURE V-7
Energy absorbed versus vehicle weight.

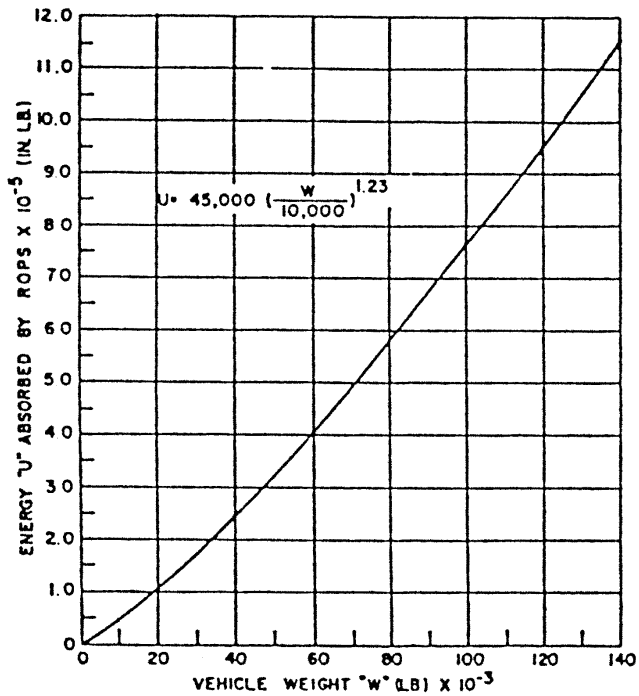

FIGURE V-8
Energy absorbed versus vehicle weight.

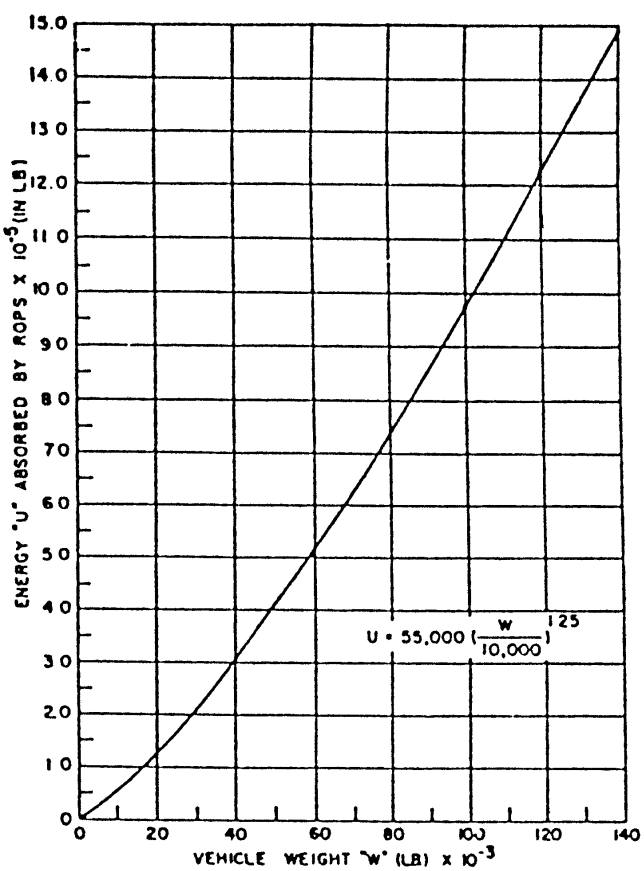

FIGURE V-9
Energy absorbed versus vehicle weight.

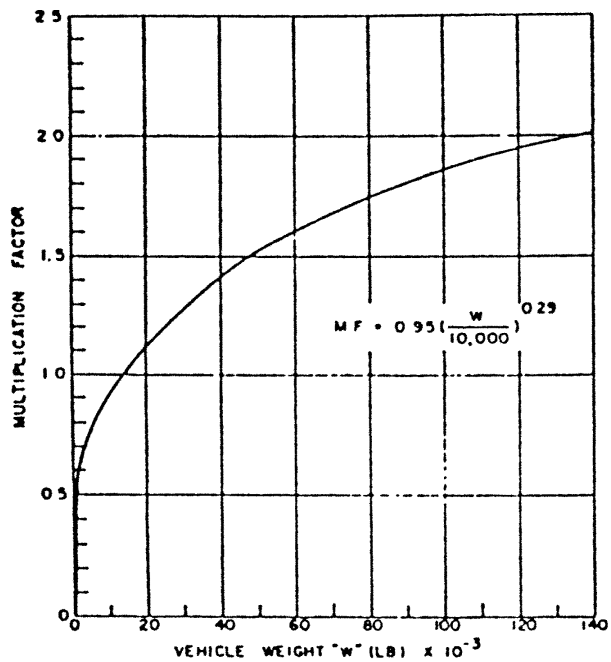

FIGURE V-10
Minimum horizontal load factor for self-propelled scrapers.

(ii) The applied load must attain at least a value which is determined by multiplying the vehicle weight by the corresponding factor shown in Figure V-10 for rubber-tired self-propelled scrapers; in Figure V-11 for rubber-tired front-end loaders and rubber-tired dozers; in Figure V-12 for crawler tractors and crawler-type loaders; and in Figure V-13 for motor graders.

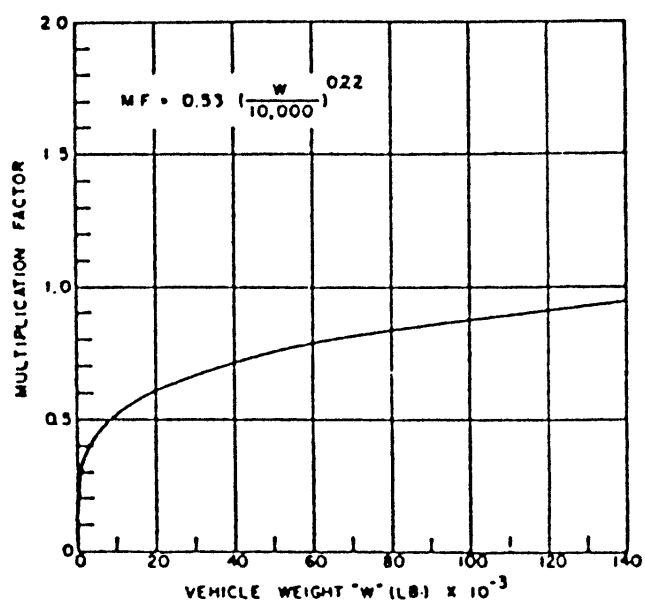

FIGURE V-11
Minimum horizontal load factor for rubber-tired loaders and dozers.

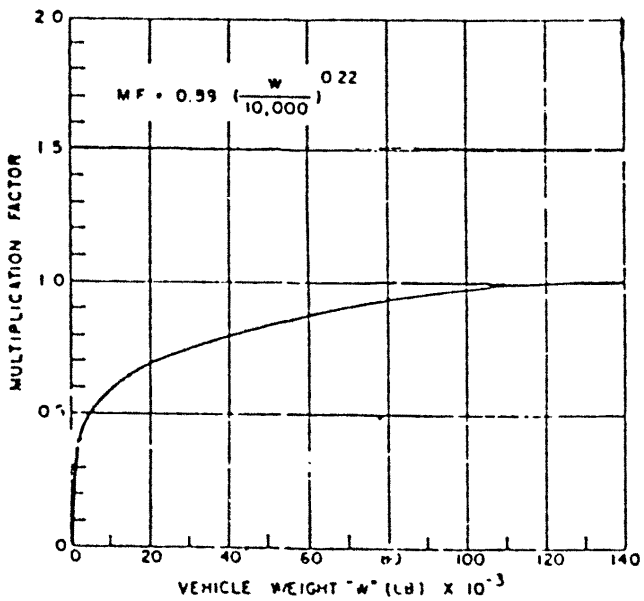

FIGURE V-12
Minimum horizontal load factor for crawler tractors and crawler-type loaders.

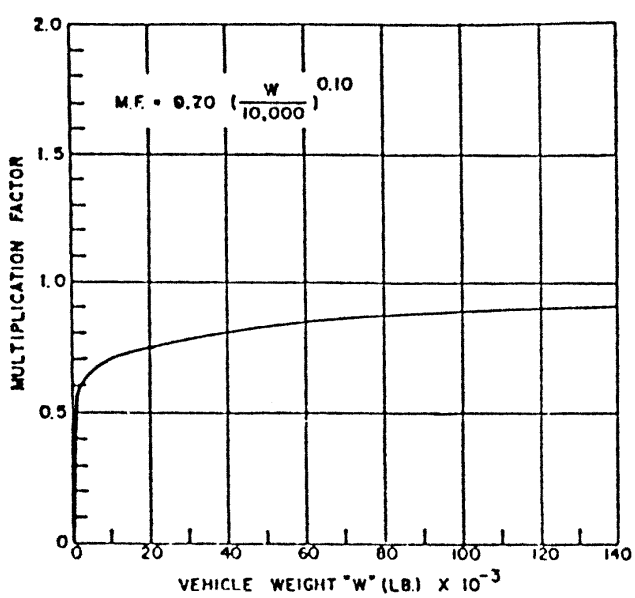

FIGURE V-13
Minimum horizontal load factor for motor graders.

(iii) The load magnitude for purposes of compliance with subsection (6)(b) of this section is equal to the vehicle weight. The test of load magnitude shall only be made after the requirements of subdivision (b)(i) of this subsection are met.

(iv) Material used in the ROPS must have the capability of performing at zero degrees Fahrenheit, or exhibit Charpy V notch impact strength of 8 foot-pounds at minus 20° Fahrenheit. This is a standard Charpy specimen as described in American Society of Testing and Materials A 370, Methods and Definitions for Mechanical Testing of Steel Products. The purpose of this requirement is to reduce the tendency of brittle fracture associated with dynamic loading, low temperature operation, and stress raisers which cannot be entirely avoided on welded structures.

(8) Source of standard. This standard is derived from, and restates, the following Society of Automotive Engineers Recommended Practices: SAE J320a, Minimum Performance Criteria for Roll-Over Protective Structure for Rubber-Tired, Self-Propelled Scrapers; SAE J394, Minimum Performance Criteria for Roll-Over Protective Structure for Rubber-Tired Front-End Loaders and Rubber-Tired Dozers; SAE J395, Minimum Performance Criteria for Roll-Over Protective Structure for Crawler Tractors and Crawler-Type Loaders; and SAE J396, Minimum Performance Criteria for Roll-Over Protective Structure for Motor Graders. These recommended practices shall be resorted to in the event that questions of interpretation arise. The recommended practices appear in the 1971 SAE Handbook, which may be examined in each of the district offices of the department of labor and industries.

[Statutory Authority: Chapter 49.17 RCW. 94-15-096 (Order 94-07), § 296-155-955, filed 7/20/94, effective 9/20/94; Order 74-26, § 296-155-955, filed 5/7/74, effective 6/6/74.]

WAC 296-155-960 Protective frame (ROPS) test procedures and performance requirements for wheel-type agricultural and industrial tractors used in construction. (1) Definitions applicable to this section.

(a) SAE J333a, Operator Protection for Wheel-Type Agricultural and Industrial Tractors (July 1970) defines "agricultural tractor" as a "wheel-type vehicle of more than 20 engine horsepower designed to furnish the power to pull, carry, propel, or drive implements that are designed for agricultural usage." Since this chapter applies only to construction work, the following definition of "agricultural tractor" is adopted for purposes of this part: "Agricultural tractor" means a wheel-type vehicle of more than 20 engine horsepower, used in construction work, which is designed to furnish the power to pull, propel, or drive implements.

(b) "Industrial tractor" means that class of wheeled type tractor of more than 20 engine horsepower (other than rubber-tired loaders and dozers described in WAC 296-155-955), used in operations such as landscaping, construction services, loading, digging, grounds keeping, and highway maintenance.

(c) The following symbols, terms, and explanations apply to this section:

E_{is} = Energy input to be absorbed during side loading. E_{is} = 723 + 0.4 W ft.-lb. (E'_{is} = 100+ 0.12 W', m.- kg).

E_{ir} = Energy input to be absorbed during rear loading. E_{ir} = 0.47 W ft.- lb. (E'_{ir} = 0.14 W', m.- kg).

W = Tractor weight as prescribed in WAC 296-155-960 (5)(a) and (5)(c) in lb. (W', kg).

L = Static load, lb. (kg.).

D = Deflection under L, in. (mm.).

L-D = Static load-deflection diagram.

L_m-D_m = Modified static load-deflection diagram (Figure V-20).To `account for increase in strength due to increase in strain rate, raise L in plastic range to L x K.

K = Increase in yield strength induced by higher rate of loading (1.3 for hot rolled low carbon steel 1010-1030). Low carbon is preferable; however, if higher carbon or other material is used, K must be determined in the laboratory. Refer to Charles H. Norris, et al., Structural Design for Dynamic Loads (1959), p. 3.

L_{max} = Maximum observed static load.

Load limit = Point on L-D curve where observed static load is 0.8 L_{max} (refer to Figure V-19).

E_u = Strain energy absorbed by the frame, ft.-lb. (m. - kg) area under L_m-D_m curve.

FER = Factor of energy ratio, FER = E_u/E_{is}; also = E_u/E_{ir}.

P_b = Maximum observed force in mounting connection under static load, L, lb. (kg.).

FSB = Design margin for mounting connection FSB = (P_u/P_b)-1.

H = Vertical height of lift of 4,410 lb. (2,000 kg.) weight, in. (H', mm.). The weight shall be pulled back so that the height of its center of gravity above the point of impact is defined as follows: H = 4.92 + 0.00190 W or (H' = 125 = 0.107 W') (Figure V-14).

[

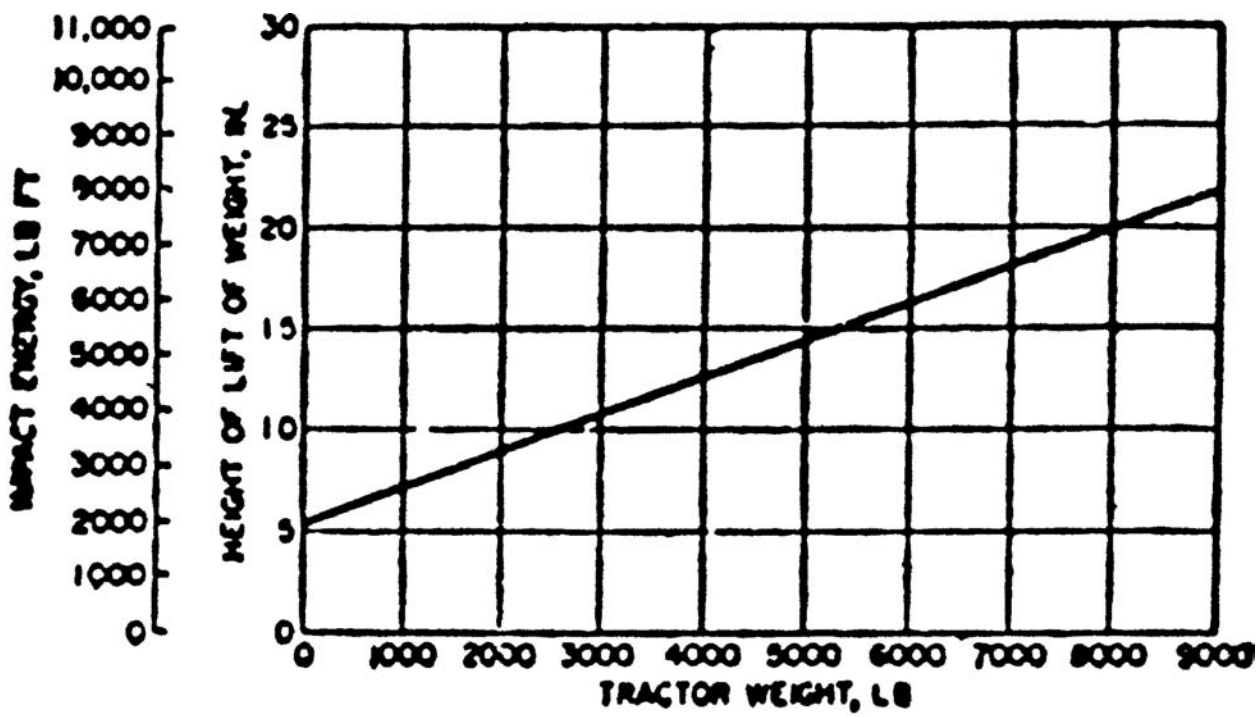

NOTATION OF FORMULAE

H = 4.92 + 0.00190 W OR (H' = 125 + 0.107 W')

W = TRACTOR WEIGHT AS DEFINED IN PARAGRAPH 3.3 IN POUNDS (W' IN KG)

]

[

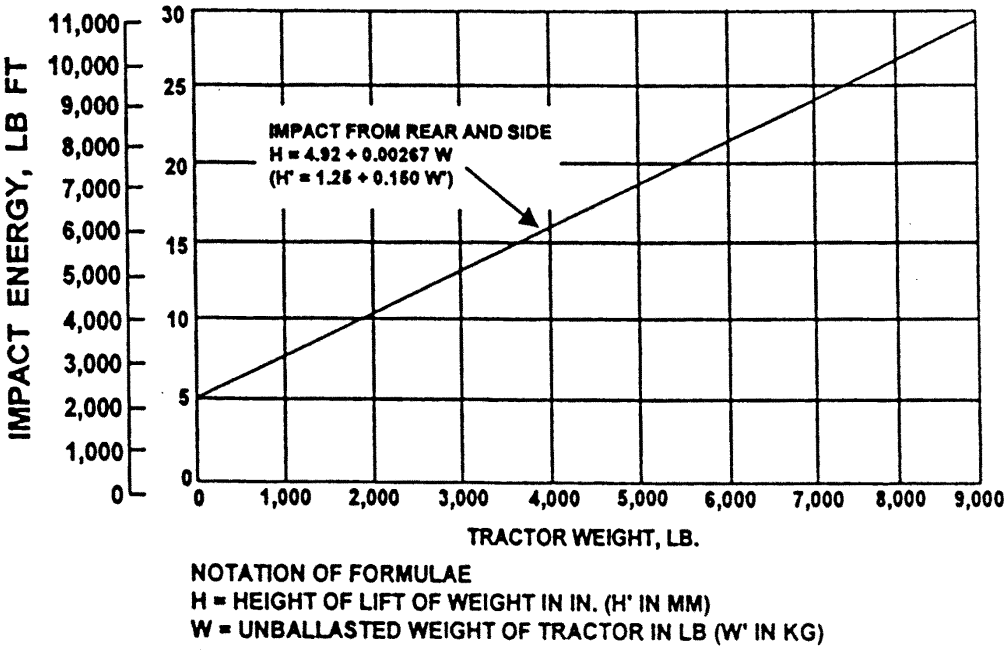

]

FIGURE V-14
Impact energy and corresponding lift height of 4,410 lb. (2,000 kg.) weight.

(d) Source of standard. The standard in this section is derived from, and restates, Society of Automotive Engineers Standard J334a (July 1970), Protective Frame Test Procedures and Performance Requirements. This standard must be used in the event that questions of interpretation arise. The standard appears in the 1971 SAE Handbook.

(2) General.

(a) The purpose of this section is to set forth requirements for frames for the protection of operators of wheel type agricultural and industrial tractors to minimize the possibility of operator injury resulting from accidental upsets during normal operation. With respect to agricultural and industrial tractors, the provisions of WAC 296-155-955 and 296-155-965 for rubber-tired dozers and rubber-tired loaders may be utilized in lieu of the requirements of this section.

(b) The protective frame which is the subject of this standard is a structure mounted to the tractor that extends above the operator's seat and conforms generally to Figure V-15.

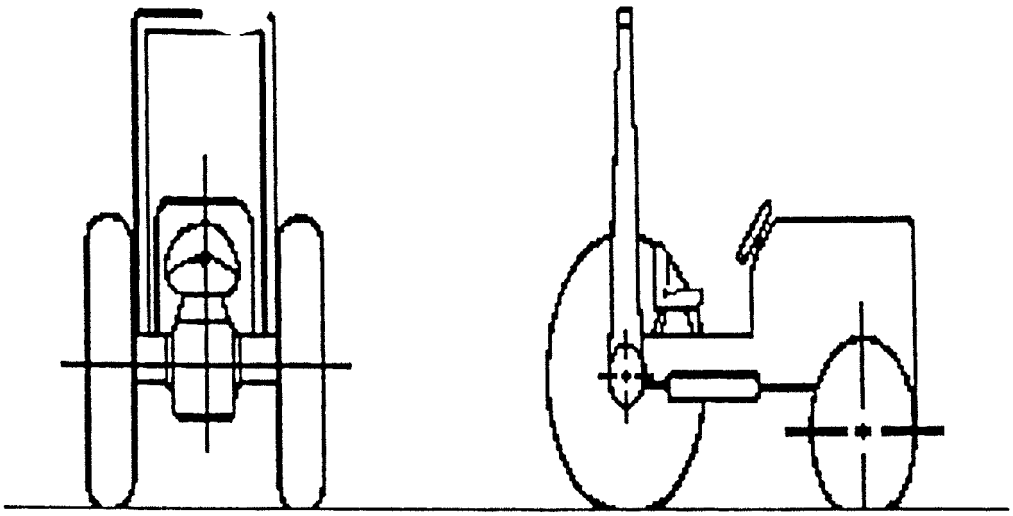

FIGURE V-15
Typical frame configuration.

(c) If an overhead weather shield is attached to the protective frame, it may be in place during tests: Provided, That it does not contribute to the strength of the protective frame. If such an overhead weather shield is attached, it must meet the requirements of subsection (10) of this section.

(d) For overhead protection requirements, see WAC 296-155-965.

(e) If protective enclosures are used on wheel-type agricultural and industrial tractors, they shall meet the requirements of Society of Automotive Engineers Standard J168 (July 1970), Protective Enclosures, Test Procedures, and performance requirements.

(3) Applicability. The requirements of this section apply to wheel-type agricultural tractors use in construction work and to wheel-type industrial tractors used in construction work. See subsection (1) of this section for definitions of agricultural tractors and industrial tractors.

(4) Performance requirements.

(a) Either a laboratory test or a field test is required in order to determine the performance requirements set forth in subsection (10) of this section.

(b) A laboratory test may be either static or dynamic. The laboratory test must be under conditions of repeatable and controlled loading in order to permit analysis of the protective frame.

(c) A field upset test, if used, shall be conducted under reasonably controlled conditions, both rearward and sideways, to verify the effectiveness of the protective frame under actual dynamic conditions.

(5) Test procedure—General.

(a) The tractor used shall be the tractor with the greatest weight on which the protective frame is to be used.

(b) A new protective frame and mounting connections of the same design shall be used for each test procedure.

(c) Instantaneous and permanent frame deformation shall be measured and recorded for each segment of the test.

(d) Dimensions relative to the seat shall be determined with the seat unloaded and adjusted to its highest and most rearward latched position provided for a seated operator.

(e) If the seat is offset, the frame loading shall be on the side with the least space between the centerline of the seat and the upright.

(f) The low temperature impact strength of the material used in the protective structure shall be verified by suitable material tests or material certifications in accordance with WAC 296-155-955 (7)(b)(iv).

(6) Test procedure for vehicle overturn.

(a) Vehicle weight. The weight of the tractor, for purposes of this section, includes the protective frame, all fuels, and other components required for normal use of the tractor. Ballast must be added if necessary to achieve a minimum total weight of 130 lb. (59 kg.) per maximum power takeoff horsepower at rated engine speed. The weight of the front end must be at least 33 lb. (15 kg.) per maximum power takeoff horsepower. In case power takeoff horsepower is unavailable, 95 percent of net engine flywheel horsepower shall be used.

(b) Agricultural tractors shall be tested at the weight set forth in subdivision (a) of this subsection.

(c) Industrial tractors shall be tested with items of integral or mounted equipment and ballast that are sold as standard equipment or approved by the vehicle manufacturer for use with the vehicle where the protective frame is expected to provide protection for the operator with such equipment installed. The total vehicle weight and front end weight as tested shall not be less than the weights established in subdivision (a) of this subsection.

(d) The test shall be conducted on a dry, firm soil bank as illustrated in Figure V-16. The soil in the impact area shall have an average cone index in the 0.6 in. (153 mm.) layer not less than 150 according to American Society of Agricultural Engineers Recommendations ASAE R313, Soil Cone Penetrometer. The path of travel of the vehicle shall be 12° ± 2° to the top edge of the bank.

(e) The upper edge of the bank shall be equipped with an 18 in. (457 mm.) high ramp as described in Figure V-16 to assist in tipping the vehicle.

(f) The front and rear wheel tread settings, where adjustable, shall be at the position nearest to halfway between the minimum and maximum settings obtainable on the vehicle. Where only two settings are obtainable, the minimum setting shall be used.

(g) Vehicle overturn test—Sideways and rearward.

(i) The tractor shall be driven under its own power along the specified path of travel at a minimum speed of 10 m.p.h. (16 km./hr.) or maximum vehicle speed if under 10 m.p.h. (16 km./hr.) up the ramp as described in subdivision (e) of this subsection to induce sideways overturn.

(ii) Rear upset shall be induced by engine power with the tractor operating in gear to obtain 3-5 m.p.h. (4.8-8 km./hr.) at maximum governed engine r.p.m. preferably by driving forward directly up a minimum slope of two vertical to one horizontal. The engine clutch may be used to aid in inducing the upset.

[

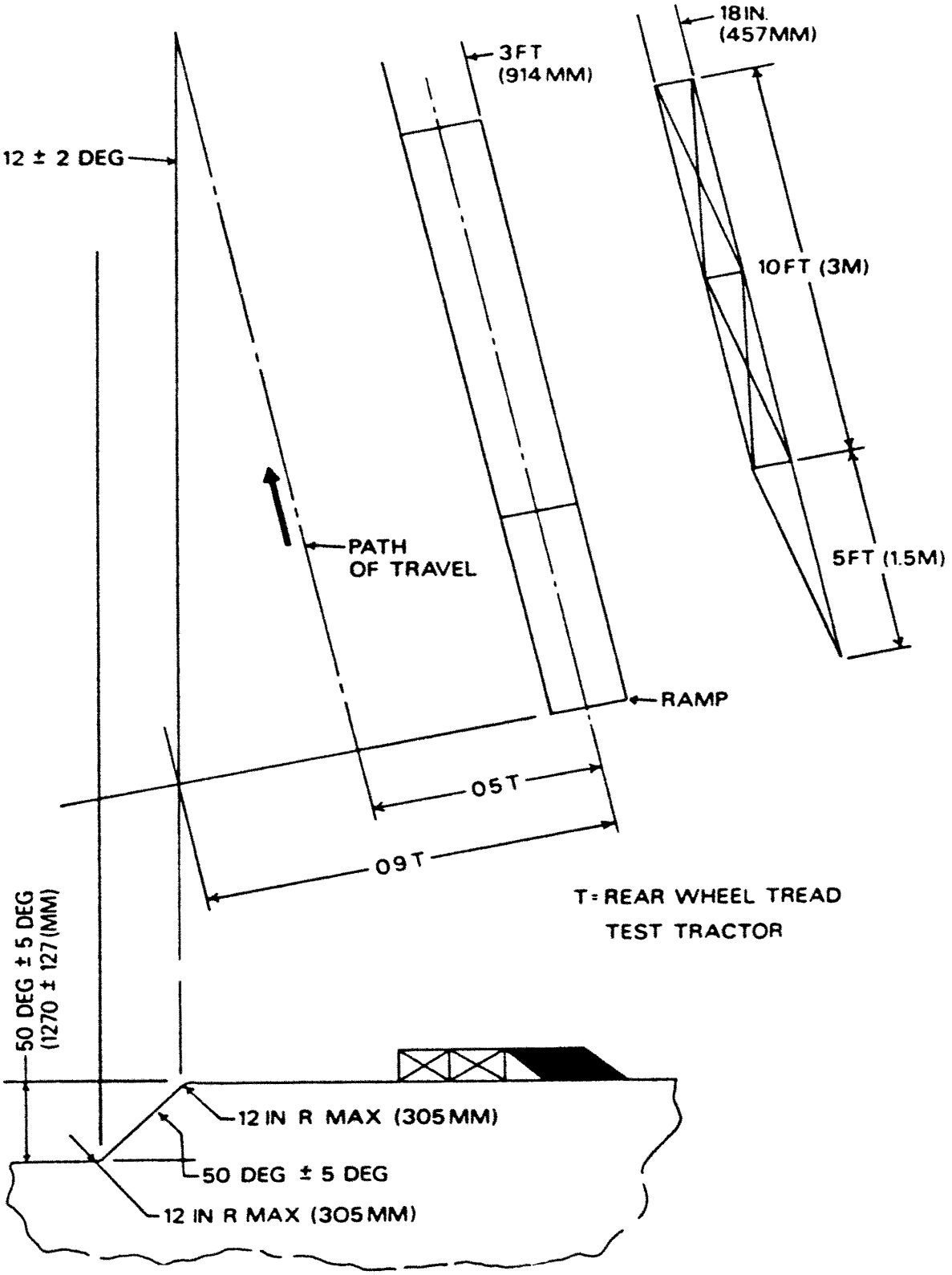
18 IN.
(457 MM)
3 FT
(914 MM)
12 ± 2 DEG
10 FT (3M)
PATH
OF TRAVEL
5 FT (1.5M)
RAMP
05 T
09 T
T = REAR WHEEL TREAD
TEST TRACTOR
50 DEG ± 5 DEG
(1270 ± 127 (MM))
12 IN R MAX (305 MM)
50 DEG ± 5 DEG
12 IN R MAX (305 MM)

]

[

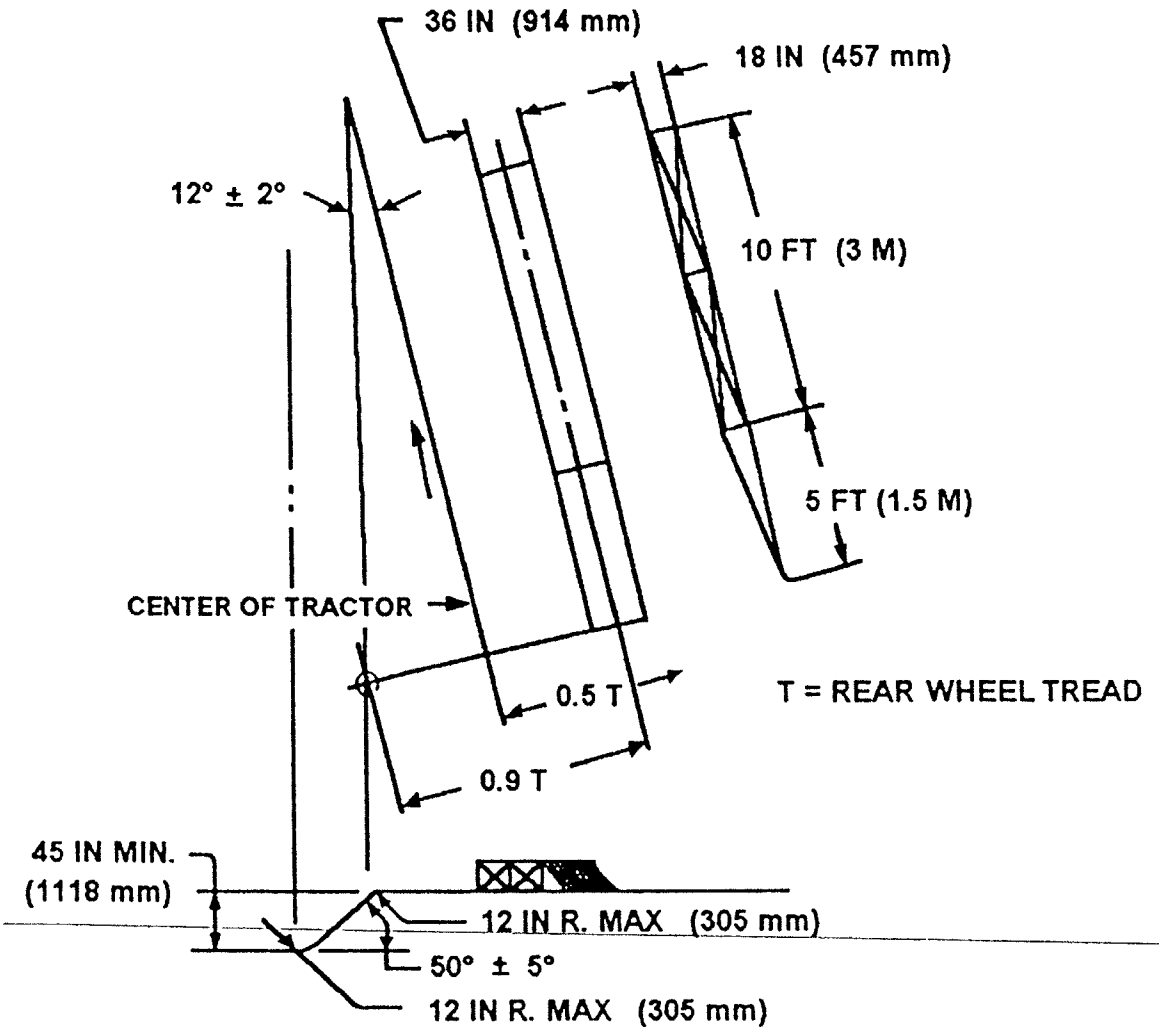

]

FIGURE V-16

(7) Other test procedures. When the field upset test is not used to determine ROPS performance, either the static test or the dynamic test, contained in subsection (8) or (9) of this section, shall be made.

(8) Static test.

(a) Test conditions.

(i) The laboratory mounting base shall include that part of the tractor chassis to which the protective frame is attached including the mounting parts.

(ii) The protective frame shall be instrumented with the necessary equipment to obtain the required load deflection data at the locations and directions specified in Figures V-17, V-18, and V-19.

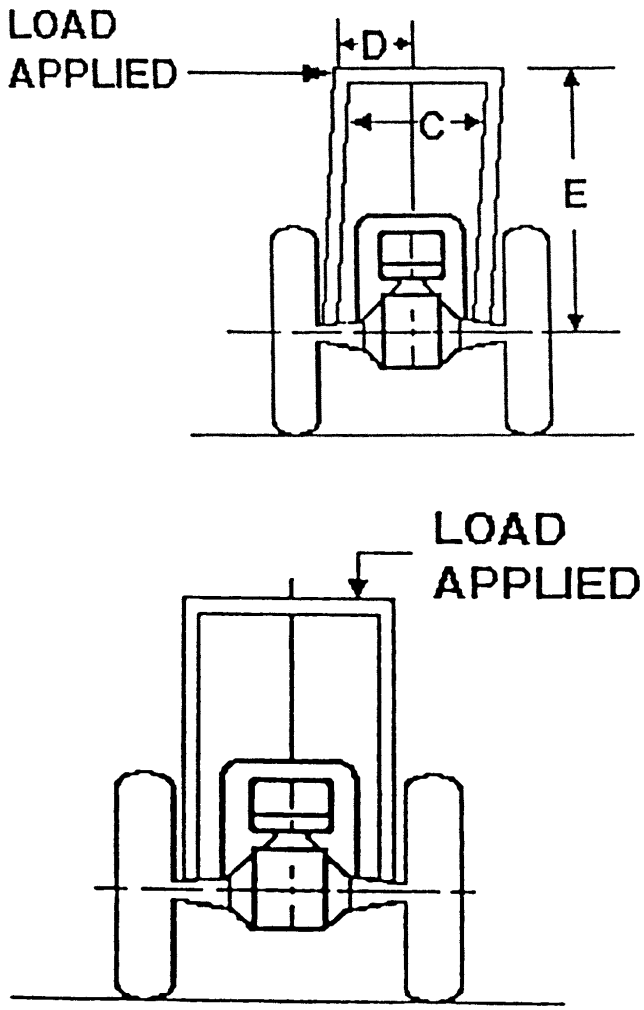

FIGURE V-17
Side load application.

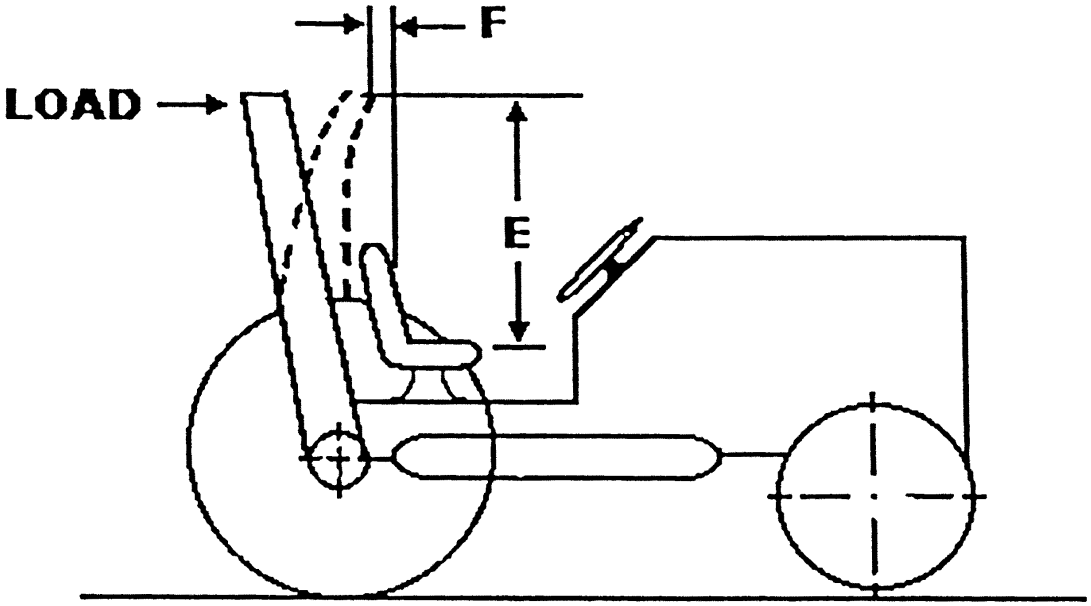

FIGURE V-18
Rear load application.

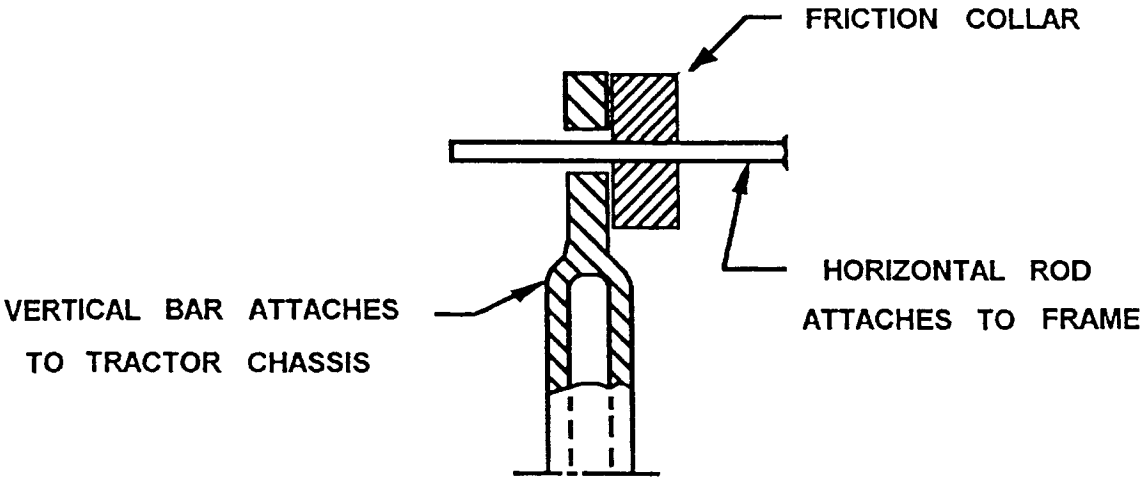

FIGURE V-19
Method of measuring instantaneous deflection.

(iii) The protective frame and mounting connections shall be instrumented with the necessary recording equipment to obtain the required load-deflection data to be used in calculating FSB (see subsection (1)(c) of this section). The gauges shall be placed on mounting connections before the installation load is applied.

(b) Test procedure.

(i) The side load application shall be at the upper extremity of the frame upright at a 90° angle to the centerline of the vehicle. The side load "L" shall be applied according to Figure V-17. "L" and "D" shall be recorded simultaneously. The test shall be stopped when:

(a) The strain energy absorbed by the frame is equal to the required input energy (E_{is}) or

(b) Deflection of the frame exceeds the allowable deflection, or

(c) The frame load limit occurs before the allowable deflection is reached in the side load.

(ii) The L-D diagram, as shown by means of a typical example in Figure V-20, shall be constructed, using the data obtained in accordance with item (i) of this subdivision.

(iii) The modified L_m-D_m diagram shall be constructed according to item (ii) of this subdivision and according to Figure V-21. The strain energy absorbed by the frame(E_u) shall than be determined.

(iv) E_{is}, FER and FSB shall be calculated.

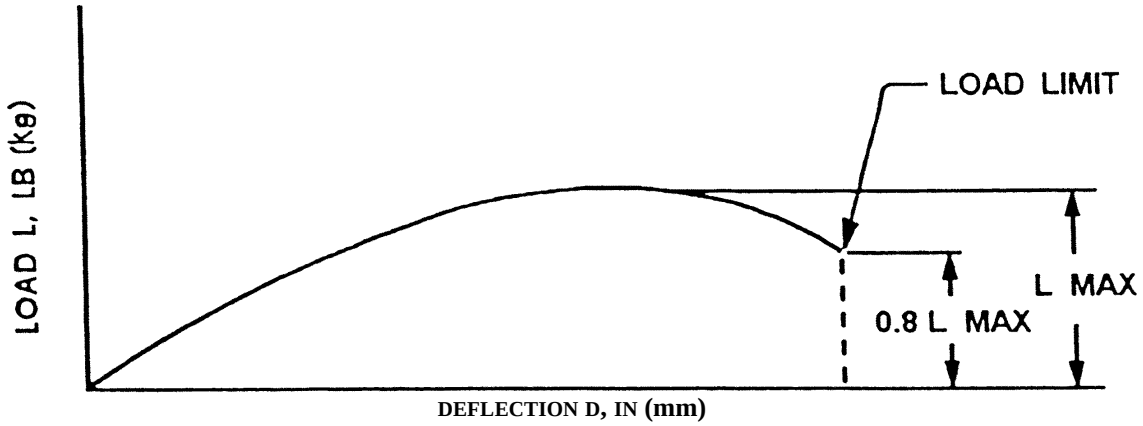

FIGURE V-20
Typical L-D diagram.

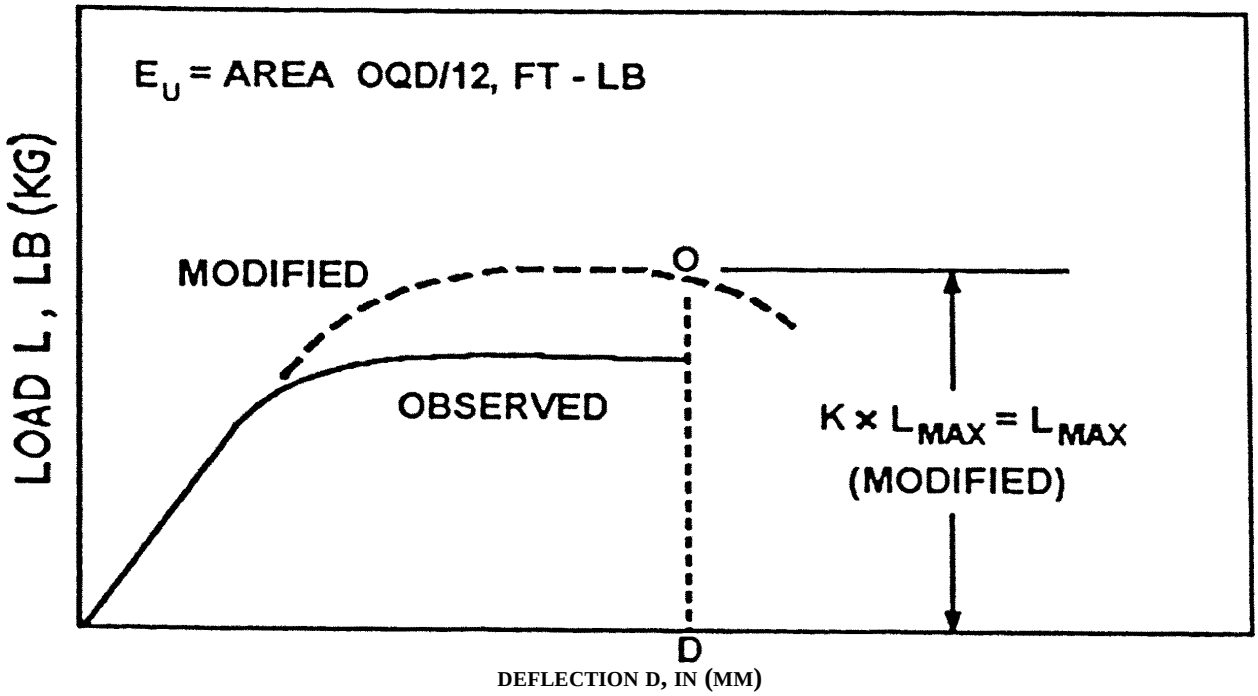

FIGURE V-21
Typical modified L_m-D_m diagram.

(v) The test procedure shall be repeated on the same frame utilizing L (rear input; see Figure V-19) and E_{ir}. Rear load application shall be uniformly distributed along a maximum projected dimension of 27 in. (686 mm.) and a maximum area of 160 sq. in. (1,032 sq. cm.) normal to the direction of load application. The load shall be applied to the upper extremity of the frame at the point which is midway between the centerline of the seat and the inside of the frame upright.

(9) Dynamic test.

(a) Test conditions.

(i) The protective frame and tractor shall meet the requirements of subsection (6)(b) or (c) of this section, as appropriate.

(ii) The dynamic loading shall be produced by use of a 4,410 lb. (2,000 kg.) weight acting as a pendulum. The impact face of the weight shall be 27 plus or minus 1 in. by 27 plus or minus 1 in. (686 + or - 25 mm.) and shall be constructed so that its center of gravity is within 1 in. (25.4 mm.) of its geometric center. The weight shall be suspended from a pivot point 18-22 ft. (5.5-6.7 m.) above the point of impact on the frame and shall be conveniently and safely adjustable for height. (See Figure V-22.)

[

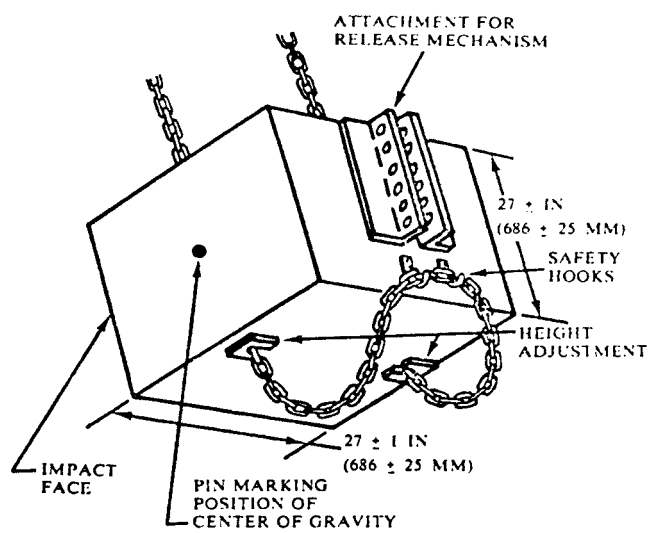

]

[

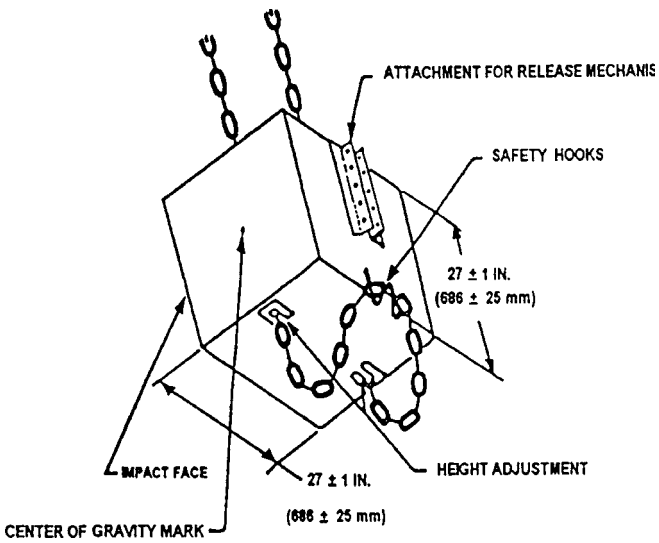

]

FIGURE V-22
Pendulum.

(iii) For each phase of testing, the tractor shall be restrained from moving when the dynamic load is applied. The restraining members shall be of 0.5-0.63 in. (12.5-16 mm.) steel cable and points of attaching restraining members shall be located an appropriate distance behind the rear axle and in front of the front axle to provide a 15°-30° angle between a restraining cable and the horizontal. The restraining member shall either be in the plane in which the center gravity of the pendulum will swing or more than one restraining cable shall give a resultant force in this plane. (See Figure V-23.)

[

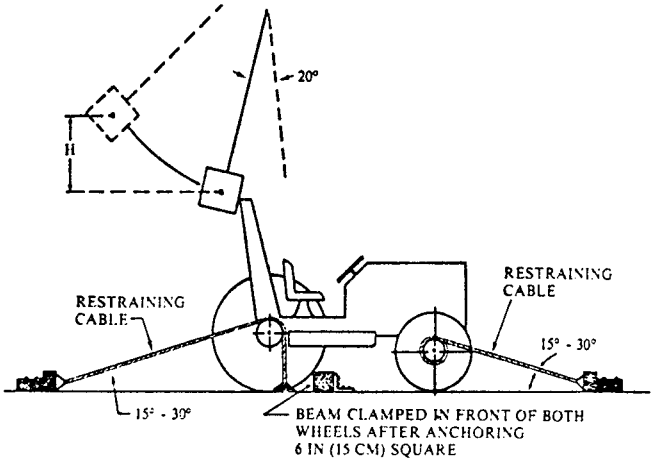

]

[

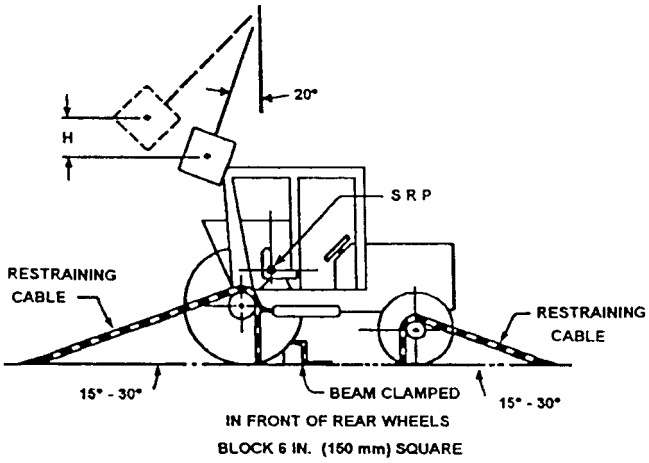

]

FIGURE V-23
Method of impact from rear.

(iv) The wheel tread setting shall comply with the requirements of subsection (6)(f) of this section. The tires shall have no liquid ballast and shall be inflated to the maximum operating pressure recommended by the tire manufacturer. With specified tire inflation, the restraining cables shall be tightened to provide tire deflection of 6-8 percent of nominal tire section width. After the vehicle is properly restrained, a wooden beam 6 x 6 in. (15 x 15 cm.) shall be driven tightly against the appropriate wheels and clamped. For the test to the side, an additional wooden beam shall be placed as a prop against the wheel nearest the operator's station and shall be secured to the floor so that it is held tightly against the wheel rim during impact. The length of this beam shall be chosen so that when it is positioned against the wheel rim it is at an angle of 25°-40° to the horizontal. It shall have a length 20-25 times its depth and a width two to three times its depth. (See Figures V-23 and V-24.)

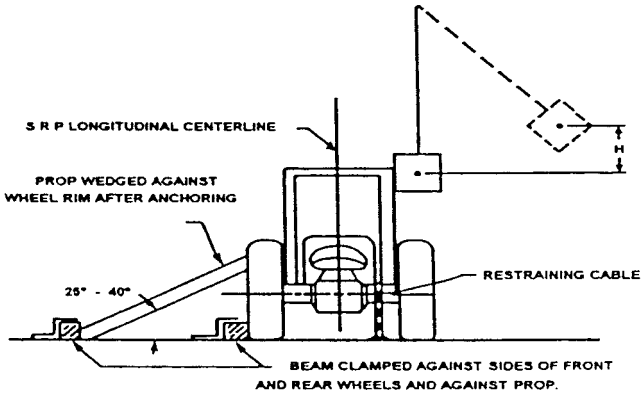

FIGURE V-24
Method of impact from side.

(v) Means shall be provided indicating the maximum instantaneous deflection along the line of impact. A simple friction device is illustrated in Figure V-24.

(vi) No repair or adjustments may be carried out during the test.

(vii) If any cables, props, or blocking shift or break during the test, the test shall be repeated.

(b) Test procedure.

(i) General. The frame shall be evaluated by imposing dynamic loading to rear followed by a load to the side on the same frame. The pendulum dropped from the height (see definition "H" in subsection (1)(c) of this section) imposes the dynamic load. The position of the pendulum shall be so selected that the initial point of impact on the frame shall be in line with the arc of travel of the center of gravity of the pendulum. A quick release mechanism should be used but, if used, shall not influence the attitude of the block.

(ii) Impact at rear. The tractor shall be properly restrained according to subdivisions (a)(iii) and (iv) of this section. The tractor shall be positioned with respect to the pivot point of the pendulum such that the pendulum is 20° from the vertical prior to impact, as shown in Figure V-23. The impact shall be applied to the upper extremity of the frame at the point which is midway between the centerline of the seat and the inside of the frame upright of a new frame.

(iii) Impact at side. The block and restraining shall conform to subdivisions (a)(iii) and (iv) of this subsection. The point of impact shall be that structural member of the protective frame likely to hit the ground first in a sideways accidental upset. The side impact shall be applied to the side opposite that used for rear impact.

(10) Performance requirements.

(a) General.

(i) The frame, overhead weather shield, fenders, or other parts in the operator area may be deformed but shall not shatter or leave sharp edges exposed to the operator, or violate dimensions as shown in Figures V-17 and V-18 as follows:

D = 2 in. (51 mm.) inside of frame upright to vertical centerline of seat.
E = 30 in. (762 mm.).
F = Not less than 0 in. and not more than 12 in. (305 mm.), measured at centerline front of seat backrest to crossbar along the line of load application as shown in Figure V-17.
G = 24 in. (610 mm.).

(ii) The material and design combination used in the protective structure must be such that the structure can meet all prescribed performance tests at zero degrees Fahrenheit in accordance with WAC 296-155-955 (7)(b)(iv).

(b) Vehicle overturn performance requirements. The requirements of this subsection (10) must be met in both side and rear overturns.

(c) Static test performance requirements. Design factors shall be incorporated in each design to withstand an overturn test as prescribed in this subsection (10). The structural requirements will be generally met if FER is greater than 1 and FSB is greater than K-1 in both side and rear loadings.

(d) Dynamic test performance requirements. Design factors shall be incorporated in each design to withstand the overturn test prescribed in this subsection (10). The structural requirements will be generally met if the dimensions in this subsection (10) are adhered to in both side and rear loads.

[Statutory Authority: RCW 49.17.010, [49.17].040, [49.17].050. 02-12-098, § 296-155-960, filed 6/5/02, effective 8/1/02; Order 74-26, § 296-155-960, filed 5/7/74, effective 6/6/74.]

Reviser's note: RCW 34.05.395 requires the use of underlining and deletion marks to indicate amendments to existing rules, and deems ineffectual changes not filed by the agency in this manner. The bracketed material in the above section does not appear to conform to the statutory requirement.

WAC 296-155-965 Overhead protection for operators of agricultural and industrial tractors. (1) General.

(a) Purpose. When overhead protection is provided on wheel-type agricultural and industrial tractors, the overhead protection shall be designed and installed according to the requirements contained in this section. The provisions of WAC 296-155-955 for rubber-tired dozers and rubber-tired loaders may be used in lieu of the standards contained in this section. The purpose of the standard is to minimize the possibility of operator injury resulting from overhead hazards such as flying and falling objects, and at the same time to minimize the possibility of operator injury from the cover itself in the event of accidental upset.

(b) Applicability. This section applies to wheel-type agricultural tractors used in construction work and to wheel-type industrial tractors used in construction work. See WAC 296-155-960 (1) and (3). In the case of machines to which WAC 296-155-625 (relating to site clearing) also applies, the overhead protection may be either the type of protection provided in WAC 296-155-625 or the type of protection provided by this section.

(2) Overhead protection. When overhead protection is installed on wheel-type agricultural or industrial tractors used in construction work, it shall meet the requirements of this subsection. The overhead protection may be constructed of a solid material. If grid or mesh is used, the largest permissible opening shall be such that the maximum circle which can be inscribed between the elements of the grid or mesh is 1.5 in. (38 mm.) in diameter. The overhead protection shall not be installed in such a way as to become a hazard in the case of upset.

(3) Test procedures—General.

(a) The requirements of WAC 296-155-960 (5), (6) and (7) shall be met.

(b) Static and dynamic rear load application shall be uniformly distributed along a maximum projected dimension of 27 in. (686 mm.) and a maximum area of 160 in.^{2} (1,032 cm.^{2}) normal direction of load application. The load shall be applied to the upper extremity of the frame at the point which is midway between the centerline of the seat and the inside of the frame upright.

(c) The static and dynamic side load application shall be uniformly distributed along a maximum projected dimension of 27 in. (686 mm.) and a maximum area of 160 in.^{2} (1,032 cm.^{2}) normal to the direction of load application. The direction of load application is the same as in WAC 296-155-960 (8) and (9). To simulate the characteristics of the structure during an upset, the center of load application may be located

from a point 24 in. (610 mm.) (K) forward to 12 in. (305 mm.) (K) forward to 12 in. (305 mm.) (L) rearward of the front of the seat backrest to best utilize the structural strength. See Figure V-25.

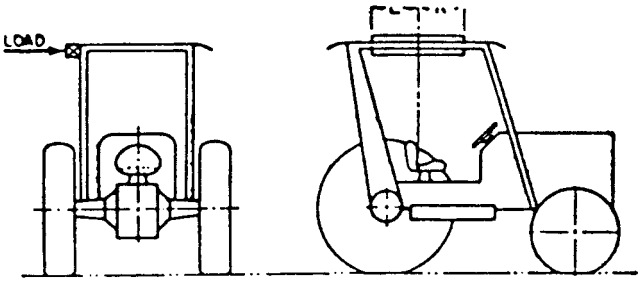

FIGURE V-25
Location for side load.

(4) Drop test procedures.

(a) The same frame shall be subjected to the drop test following either the static or dynamic test.

(b) A solid steel sphere or material of equivalent spherical dimension weighing 100 lb. (45.4 kg.) shall be dropped once from a height 10 ft. (3,048 mm.) above the overhead cover.

(c) The point of impact shall be on the overhead cover at a point within the zone of protection as shown in Figure V-26, which is furthest removed from major structural members.

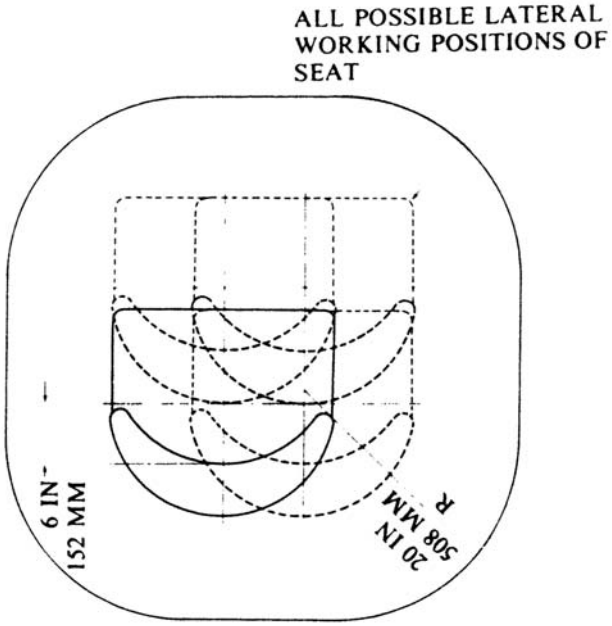

FIGURE V-26
Zone of protection for drop test.

(5) Crush test procedure.

(a) The same frame shall be subjected to the crush test following the drop test and static or dynamic test.

(b) The test load shall be applied as shown in Figure V-27 with the seat positioned as specified in WAC 296-155-960 (5)(d). Loading cylinders shall be pivotally mounted at both ends. Loads applied by each cylinder shall be equal within 2 percent, and the sum of the loads of the two cylinders shall be two times the tractor weight as set forth in WAC 296-155-960 (6)(a). The maximum width of the beam illustrated in Figure V-27 shall be 6 in. (152 mm.).

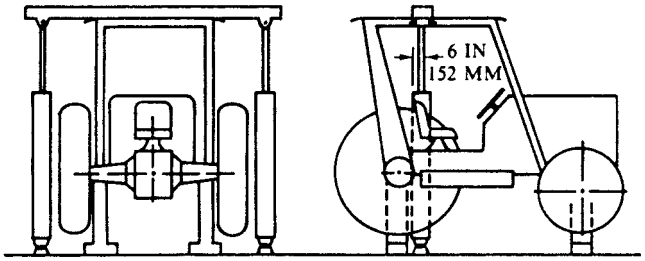

FIGURE V-27
Method of load application for crush test.

(6) Performance requirements.

(a) General. The performance requirements set forth in WAC 296-155-960 (10)(b), (c) and (d) shall be met.

(b) Drop test performance requirements.

(i) Instantaneous deformation due to impact of the sphere shall not enter the protected zone as illustrated in Figures V-25, V-26, and V-28.

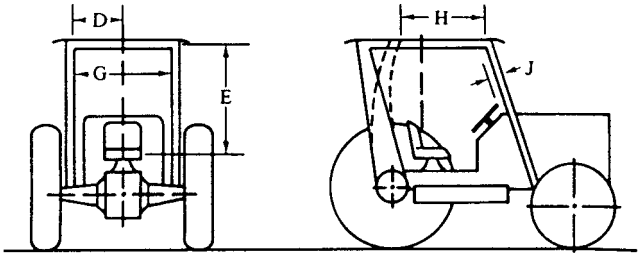

FIGURE V-28
Protected zone during crush and drop tests.

(ii) In addition to the dimensions set forth in WAC 296-155-960 (10)(a)(i) the following dimensions apply to Figure V-28:

H = 17.5 in. (444 mm.).
J = 2 in. (50.8 mm.) measured from the outer periphery of the steering wheel.

(c) Crush test performance requirements. The protected zone as described in Figure V-28 must not be violated.

(7) Source of standard. This standard is derived from, and restates, the portions of Society of Automotive Engineers Standard J167 which pertain to overhead protection requirements. The full title of the SAE standard is: Protective Frame with Overhead Protection—Test Procedures and performance requirements. The SAE standard shall be resorted to in the event that questions of interpretation arise. The SAE standard appears in the 1971 SAE Handbook.

[Order 74-26, § 296-155-965, filed 5/7/74, effective 6/6/74.]

Chapter 296-200A WAC

CONTRACTOR CERTIFICATE OF REGISTRATION RENEWALS—SECURITY—INSURANCE

WAC

296-200A-005	What is the goal of this chapter?
296-200A-015	What terms do I need to know to understand this chapter?
296-200A-025	How does a contractor register, renew, reregister or reinstate its registration?
296-200A-030	How much are the surety bond or savings account amounts?
296-200A-035	How long is a contractor's registration period?
296-200A-040	What can cause the suspension of a contractor's registration?
296-200A-050	What requirements must be met if a contractor changes its business structure, name or address?
296-200A-060	What procedures must be followed when surety bonds and/or insurance policies are canceled?
296-200A-065	What procedures must be followed when surety bonds and/or other securities approved by the department become impaired?
296-200A-070	When will the department release a security deposit?
296-200A-080	How is a suit filed against a contractor?
296-200A-090	How are judgments against contractors paid?
296-200A-110	Is a city, town, or county required to verify a contractor registration number?
296-200A-111	How does a city, town, or county verify a contractor's registration?
296-200A-112	Who is liable when a city, town, or county fails to verify a contractor's registration?
296-200A-300	What violations of chapter 18.27 RCW can result in the issuance of a notice of infraction?
296-200A-305	How does the department notify registered contractors regarding any unregistered subcontractors they may employ?
296-200A-310	What information must be included in a notice of infraction?
296-200A-320	How can a notice of infraction be served?
296-200A-330	How are notices of infraction issued?
296-200A-340	How does a contractor appeal a notice of infraction?
296-200A-350	Who presides over an appeal hearing and where is it held?
296-200A-360	Who may represent the contractor and the department at the appeal hearing?
296-200A-370	How is the appeal hearing conducted?
296-200A-380	What evidence is admissible in an appeal hearing?
296-200A-390	What does the department do with the appeal notices that they receive?
296-200A-400	What monetary penalties will be assessed for an infraction issued for violations of RCW 18.27.100, 18.27.110, 18.27.114 or 18.27.200?
296-200A-405	When must a contractor pay assessed monetary penalties?
296-200A-900	What fees does the department charge contractors for issuance, renewal, reregistration, and reinstatement of certificates of registration?

DISPOSITION OF SECTIONS FORMERLY CODIFIED IN THIS CHAPTER

296-200A-500	Is the department required to monitor unregistered contractors who become registered? [Statutory Authority: Chapter 18.27 RCW. 97-24-071, § 296-200A-500, filed 12/2/97, effective 1/5/98.] Repealed by 03-20-097, filed 9/30/03, effective 11/17/03. Statutory Authority: RCW 18.27.040, 18.27.070, 18.27.075, 18.27.125 and 2001 c 159, and chapter 18.27 RCW.
296-200A-510	Is the department required to report contractor compliance activities to the legislature? [Statutory Authority: Chapter 18.27 RCW. 97-24-071, § 296-200A-510, filed 12/2/97, effective 1/5/98.] Repealed by 03-20-097, filed 9/30/03, effective 11/17/03. Statutory Authority: RCW 18.27.040, 18.27.070, 18.27.075, 18.27.125 and 2001 c 159, and chapter 18.27 RCW.

WAC 296-200A-005 What is the goal of this chapter? The goal of this chapter is to:

(1) Reduce the paperwork required for contractor registrations.

(2) Clarify issues related to suits against contractors and the collection of court judgments.

(3) Ensure that the contractors registration law (chapter 18.27 RCW) is efficiently and properly administered.

[Statutory Authority: Chapter 18.27 RCW. 97-24-071, § 296-200A-005, filed 12/2/97, effective 1/5/98.]

WAC 296-200A-015 What terms do I need to know to understand this chapter? For the purposes of this chapter, the following terms and definitions are important:

"Administrative law judge" is any person appointed by the chief administrative law judge (as defined in RCW 34.12.020(2)) to preside at a notice of infraction appeal hearing convened under chapter 18.27 RCW and this chapter.

"Appeal hearing" is any proceeding in which an administrative law judge is empowered to determine legal rights, duties or privileges of specific parties on behalf of the director.

"Applicant" is any person, firm, corporation or other entity applying to become a registered contractor according to chapter 18.27 RCW and this chapter. Applicant includes all principal officer(s), members, partners of a partnership, firm, corporation, or other entity named on the application.

"Citation" means the same as "infraction."

"Compliance inspector" refers to the departmental staff responsible for investigating potential violations of chapter 18.27 RCW and this chapter.

"Contractor compliance chief" refers to the person designated by the director to address all policy and technical issues related to chapter 18.27 RCW and this chapter.

"Department" refers to the department of labor and industries.

"Director" refers to the director of the department of labor and industries or the director's designee acting in the place of the director.

"Final judgment" means any money that is owed to a claimant as a result of court action against a contractor's bond or assigned savings account with the department or any money that is owed the department as a result of a contractor's unsuccessful appeal of an infraction. Final judgment also includes any penalties assessed against the contractor and owed the department as a result of an unappealed infraction or any outstanding fees due under this chapter.

"Infraction" means a violation of chapter 18.27 RCW and this chapter as cited by the chief contractor compliance inspector or the department's construction compliance inspectors.

"Renewal" or **"renewed"** means the renewal of a contractor's registration before it expires.

"Reinstatement" or **"reinstated"** means the reinstatement of a contractor's registration after the registration has expired, been suspended, or been revoked.

"Reregistration" or **"reregister"** means an update to a contractor's registration because of business structure change.

"Secured contractor" is a contractor who has complied with RCW 18.27.040 by assigning to the department a savings account held in a Washington state bank, or by filing with the department a surety bond.

"Security" is a savings account held in a Washington state bank and assigned to the department in lieu of a surety bond.

"Unregistered contractor" means a person, firm, corporation or other entity working as a contractor without being registered in compliance with chapter 18.27 RCW and this chapter.

"Unsatisfied final judgment" means a judgment that has not been satisfied either through payment, court approved settlement, discharge in bankruptcy, or assignment under RCW 19.72.070.

[Statutory Authority: RCW 18.27.040, 18.27.070, 18.27.075, 18.27.125, 2001 c 159, and chapter 18.27 RCW. 03-20-097, § 296-200A-015, filed 9/30/03, effective 11/17/03. Statutory Authority: Chapter 18.27 RCW. 97-24-071, § 296-200A-015, filed 12/2/97, effective 1/5/98.]

WAC 296-200A-025 How does a contractor register, renew, reregister or reinstate its registration? (1) A contractor may register/renew/reregister/reinstate if it:

(a) Completes an application for contractor registration and submits it to the department as required by RCW 18.27.030;

(b) Satisfies one of the following:

(i) Obtains a continuous surety bond in the total amount specified in WAC 296-200A-030 and submits the original bond with bond number to the department (see RCW 18.27.040); or

(ii) Assigns, to the department, a security deposit in the form of a savings account held in a Washington state bank as specified in WAC 296-200A-030;

(c) Obtains public liability and property damage insurance and submits the original insurance certificate with policy number to the department (see RCW 18.27.050); and

(d) Pays the issuance/renewal/reregistration/reinstatement fee shown in WAC 296-200A-900.

(2) A contractor may renew its registration if it submits, to the department, a completed contractor registration renewal notice and the material required in subsection (1)(b) and (c) of this section and pays the renewal fee shown in WAC 296-200A-900. No more than forty-five days before the contractor's registration expires, the department must send a renewal notice to the contractor's last recorded address. It is the responsibility of the contractor to notify the department **in writing** of a change in address.

(3) The contractor must:

(a) Submit all required documents to the department in a manner approved by the department as set forth in subsections (3)(b), (c), (d), and (4) of this section;

(b) Include, on each document, the name exactly as it appears on the contractor registration application or renewal notice;

(c) Include, if renewing a registration, the contractor's registration number on each of the documents; and

(d) Include a copy of the certificate or document (when required) by the secretary of state for the contractor to do business in the state of Washington.

(4) The department will not register, renew, or reinstate the registration of a contractor if:

(a) Any of the required documents are missing;

(b) The documents do not have the proper name of the contractor;

(c) In the case of a renewal, the documents do not include the registration number; or

(d) The applicant or person pursuant to RCW 18.27.030 has an unsatisfied final judgment based on work which is subject to chapter 18.27 RCW and this chapter.

(5) The contractor may request, in a letter filed with the application or renewal materials, that the registration period end on a particular day. However, the registration period cannot exceed two years.

[Statutory Authority: RCW 18.27.040, 18.27.070, 18.27.075, 18.27.125, 2001 c 159, and chapter 18.27 RCW. 03-20-097, § 296-200A-025, filed 9/30/03, effective 11/17/03. Statutory Authority: Chapter 18.27 RCW. 97-24-071, § 296-200A-025, filed 12/2/97, effective 1/5/98.]

WAC 296-200A-030 How much are the surety bond or savings account amounts? (1) The continuous surety bond or savings account amounts for applicants of contractors with five or fewer final judgments involving a residential single-family dwelling on two or more different structures in the previous five years are as follows:

(a) Twelve thousand dollars for general contractors.

(b) Six thousand dollars for specialty contractors.

(2) The surety bond or savings account amounts for applicants of contractors with six or more final judgments involving a residential single-family dwelling on two or more different structures in the previous five years will be based upon (a) and (b) of this subsection. (a) and (b) of this subsection do not apply to final judgments rendered before July 22, 2001.

(a) General contractors.

Number of Final Judgments	Bond or Savings Account Amount per Calendar Year
6	$18,000.00
7	$24,000.00
8	$30,000.00
9 or more	$36,000.00

(b) Specialty contractors.

Number of Final Judgments	Bond or Savings Account Amount per Calendar Year
6	$ 8,000.00
7	$12,000.00
8	$16,000.00
9 or more	$18,000.00

(3) At the time of reregistration, renewal or reinstatement the department shall only consider final judgments from the previous five years which will be used to determine the bond or savings account amount according to subsection (2)(a) and (b) of this section. Final judgments rendered before July 22, 2001, will not be considered toward the required bond or savings account amount.

(4) For purposes of this section, final judgment does not include infractions.

[Statutory Authority: RCW 18.27.040, 18.27.070, 18.27.075, 18.27.125, 2001 c 159, and chapter 18.27 RCW. 03-20-097, § 296-200A-030, filed 9/30/03, effective 11/17/03.]

WAC 296-200A-035 How long is a contractor's registration period? A registration period is for two years per RCW 18.27.060(1).

[Statutory Authority: RCW 18.27.040, 18.27.070, 18.27.075, 18.27.125, 2001 c 159, and chapter 18.27 RCW. 03-20-097, § 296-200A-035, filed 9/30/03, effective 11/17/03. Statutory Authority: Chapter 18.27 RCW. 97-24-071, § 296-200A-035, filed 12/2/97, effective 1/5/98.]

WAC 296-200A-040 What can cause the suspension of a contractor's registration? (1) A contractor's registration will be suspended if the following impairments, cancellations, noncompliance, or errors occur:

(a) A surety bond or other security has an unsatisfied final judgment against it or becomes otherwise impaired.

(b) A surety bond is canceled.

(c) An insurance policy is expired, canceled, revoked or the insurer is withdrawn from the insurance policy.

(d) The contractor has an unsatisfied final judgment against it under chapter 18.27 RCW and this chapter.

(e) The department has notice that the contractor is a sole proprietor or a principal or officer of a registered contractor that has an unsatisfied final judgment against it for work within the scope of chapter 18.27 RCW and this chapter.

(f) The department is notified that the contractor has been certified by the department of social and health services as a person who is not in compliance with a support order as provided in RCW 74.20A.320.

(g) The department finds that the contractor has provided false information or has otherwise been registered in error.

(h) The contractor fails to comply with a penalty payment plan agreement.

(i) The contractor has been certified by a leading agency and reported to the department for nonpayment or default on a federally or state-guaranteed educational loan or service conditional scholarship.

(j) The contractor does not maintain a valid unified business identifier number, if required by the department of revenue.

(2) The contractor's registration will be automatically suspended on the effective date of the impairment or cancellation. The department must mail a notice of the suspension to the contractor's address on the certificate of registration by certified mail **and** first class mail within two days after suspension.

(3) A contractor must not advertise, offer to do work, submit a bid, or perform any work as a contractor while its registration is suspended. To continue to operate as a contractor while its registration is suspended is a violation of chapter 18.27 RCW and subject to infractions.

(4) The department shall not deny an application or suspend a registration because of an unsatisfied final judgment if the applicant's or registrant's unsatisfied final judgment was determined by the director to be the result of the fraud or negligence of another party.

[Statutory Authority: RCW 18.27.040, 18.27.070, 18.27.075, 18.27.125, 2001 c 159, and chapter 18.27 RCW. 03-20-097, § 296-200A-040, filed 9/30/03, effective 11/17/03. Statutory Authority: Chapter 18.27 RCW. 97-24-071, § 296-200A-040, filed 12/2/97, effective 1/5/98.]

WAC 296-200A-050 What requirements must be met if a contractor changes its business structure, name or address? (1) If a contractor changes its business structure (for example, from a partnership to a corporation or if the partners in a partnership change), the contractor must:

(a) Apply for a new registration as required in WAC 296-200A-025; and

(b) Pay the registration fee shown in WAC 296-200A-900.

(2) Failure to reregister after a change in business structure may invalidate the contractor's registration. See RCW 18.27.040.

(3) If a registered contractor changes its name, it must:

(a) Notify the department, in writing, of the change; and

(b) Pay the registration fee shown in WAC 296-200A-900; and

(c) Submit to the department a name change rider **or** a new bond in the new name and a certificate of insurance in the new name.

(4) If a registered contractor changes its address, it must notify the department in writing.

[Statutory Authority: Chapter 18.27 RCW. 97-24-071, § 296-200A-050, filed 12/2/97, effective 1/5/98.]

WAC 296-200A-060 What procedures must be followed when surety bonds and/or insurance policies are canceled? (1) Insurance and bonding companies must send cancellation notices to the department.

(2) Cancellation notices must contain the following information:

(a) The name of the contractor exactly as it appears in the contractor's registration file;

(b) The contractor's registration number;

(c) The contractor's business address;

(d) The names of the owners, partners, or officers of the contractor;

(e) The bond or insurance policy number; and

(f) The effective date of the bond or insurance policy.

(3) The cancellation of a surety bond or insurance policy shall be considered effective immediately after the department receives a cancellation notice unless a later specific date is provided.

[Statutory Authority: RCW 18.27.040, 18.27.070, 18.27.075, 18.27.125, 2001 c 159, and chapter 18.27 RCW. 03-20-097, § 296-200A-060, filed 9/30/03, effective 11/17/03. Statutory Authority: Chapter 18.27 RCW. 97-24-071, § 296-200A-060, filed 12/2/97, effective 1/5/98.]

WAC 296-200A-065 What procedures must be followed when surety bonds and/or other securities approved by the department become impaired? (1) Once the department has been notified that the surety bond or other securities approved by the department has been impaired by a final judgment or reduced by payment to an amount less than is required by WAC 296-200A-030, the contractor's registration will automatically be suspended and the department will send a letter to the contractor by certified mail.

(2) Once the unsatisfied final judgment has been satisfied, the contractor may reapply according to the requirements of this chapter.

[Statutory Authority: RCW 18.27.040, 18.27.070, 18.27.075, 18.27.125, 2001 c 159, and chapter 18.27 RCW. 03-20-097, § 296-200A-065, filed 9/30/03, effective 11/17/03.]

WAC 296-200A-070 When will the department release a security deposit? (1) The department will release a security deposit two years after the contractor's last registra-

tion has expired **unless** there is an unsatisfied final judgment or on-going claim against the contractor.

(2) The department will release a security deposit in less than two years after the contractor's last registration has expired if the contractor provides a surety bond covering **both the previous and current registration periods.**

[Statutory Authority: RCW 18.27.040, 18.27.070, 18.27.075, 18.27.125, 2001 c 159, and chapter 18.27 RCW. 03-20-097, § 296-200A-070, filed 9/30/03, effective 11/17/03. Statutory Authority: Chapter 18.27 RCW. 97-24-071, § 296-200A-070, filed 12/2/97, effective 1/5/98.]

WAC 296-200A-080 How is a suit filed against a contractor? (1) A civil suit against a contractor must be filed in the superior court of the county in which the work was done or of any county in which jurisdiction of the contractor may be had. Unless the suit is filed in a superior court, the department will not be able to direct payment on an unsatisfied final judgment against a secured contractor.

(2) Notice that a suit has been filed (a summons and complaint) against a contractor, the contractor's bond, and/or the contractor's deposit must be exclusively delivered to the department by registered or certified mail to: P.O. Box 44450, Olympia, Washington 98504-4450 or by any delivery requiring notice of receipt to: 7273 Linderson Way S.W., Tumwater, WA 98501. The notice must be addressed to the department and must include three copies of the summons and complaint filed against the contractor, the contractor's bond and/or the contractor's deposit. The person filing the suit must pay a twenty-dollar service fee to the department.

(3) The summons and complaint against a contractor must include the following information:

(a) The name of the contractor exactly as it appears in the contractor's registration file;

(b) The contractor's business address;

(c) The names of the owners, partners or officers of the contractor if known; and

(d) The contractor's registration number.

(4) If the suit joins a bonding company, the summons and complaint should also include:

(a) The name of the bonding company that issued the contractor's bond;

(b) The bond number; and

(c) The effective date of the bond.

(5) If the suit is against a contractor using an assigned account in lieu of a bond, the complaint must also include:

(a) The name of the institution where the assigned account is held;

(b) The account number; and

(c) The date the assigned account was opened.

(6) Service is not considered complete until the department receives the documents in Tumwater with the twenty-dollar fee and three copies of the summons and complaint.

(7) Within two days of receiving a summons and complaint, the department must transmit a copy of the summons and complaint to the registrant at the address listed on the registrant's application or at their last known address provided to the department and to the registrant's surety.

(8) The department will return a summons and complaint without it being served, if the department cannot readily identify either the contractor or bonding company being sued, if the action did not arise under chapter 18.27 RCW, or if the fee and three copies of the summons and complaint are not received.

[Statutory Authority: RCW 18.27.040, 18.27.070, 18.27.075, 18.27.125, 2001 c 159, and chapter 18.27 RCW. 03-20-097, § 296-200A-080, filed 9/30/03, effective 11/17/03. Statutory Authority: RCW 43.22.350, 43.22.434, 43.22.480, 43.22.500, 18.27.040, 18.27.070, 18.27.075, 70.87.030, 19.28.041, 19.28.051, 19.28.101, 19.28.121, 19.28.161, 19.28.201, 19.28.211, 19.28.341, 2001 c 7, 2002 c 249, and chapters 19.28, 43.22, 18.27, and 70.87 RCW. 02-12-022, § 296-200A-080, filed 5/28/02, effective 6/28/02. Statutory Authority: Chapter 18.27 RCW. 97-24-071, § 296-200A-080, filed 12/2/97, effective 1/5/98.]

WAC 296-200A-090 How are judgments against contractors paid? (1) **The department can only release or order release of payment for a superior court final judgment.** The department cannot release or order the release of payment to a district court or to satisfy other types of judgments.

(2) Payment of a final judgment by bond. If a contractor is bonded, the department can neither pay a final court judgment against a contractor nor force the contractor or its bonding company to pay. Only the claimant can pursue payment from the contractor or its bonding company.

(3) Payment of a final judgment by assignment of account.

(a) If a contractor's security is held by the department it must be used to pay a superior court final judgment against a secured contractor.

The department must pay a superior court final judgment against a secured contractor if the claimant supplies the department with one certified copy of the unpaid final court judgment. The certified copy must be delivered by registered or certified mail within one year of the date the final judgment was officially entered into the court record.

(b) Assignment of account payments under subsection (2) of this section will be paid out in the order the final judgment is received by the department.

(c) For the department to pay a superior court final judgment, the claimant must include the following information with the copy of the judgment:

(i) The name of the contractor exactly as it appears on the contractor's registration file;

(ii) The contractor's business address;

(iii) The names of the owners, partners, or officers of the contractor;

(iv) The contractor's registration number; and

(v) The exact amount of the judgment, including court costs, attorneys' fees and interest.

If the department does not receive enough information to pay the judgment, it will inform the claimant.

The department shall have no liability for payment in excess of the amount of the secured account.

(4) Payment of a final judgment by the contractor. The contractor may pay a superior court final judgment in lieu of the department releasing or ordering the release of a bond or the assignment of account funds to satisfy the final judgment. The contractor must provide the department with a "full satisfaction of judgment" from the superior court that the final judgment has been satisfied.

[Statutory Authority: RCW 18.27.040, 18.27.070, 18.27.075, 18.27.125, 2001 c 159, and chapter 18.27 RCW. 03-20-097, § 296-200A-090, filed

9/30/03, effective 11/17/03. Statutory Authority: Chapter 18.27 RCW. 97-24-071, § 296-200A-090, filed 12/2/97, effective 1/5/98.]

WAC 296-200A-110 Is a city, town, or county required to verify a contractor registration number? Before issuing a building permit, a city, county or town must verify the registration of the general or specialty contractor applying for the permit.

[Statutory Authority: Chapter 18.27 RCW. 97-24-071, § 296-200A-110, filed 12/2/97, effective 1/5/98.]

WAC 296-200A-111 How does a city, town, or county verify a contractor's registration? (1) A city, town, or county may verify an original contractor registration by receiving and duplicating a current contractor registration card, by checking the department's contractor registration internet website, checking the computer disk (CD) circulated by the department, or by calling the department to confirm that the contractor is registered.

(2) The contractor's registration is valid if the contractor provides a notarized copy of the original contractor registration card or a facsimile verification from the department.

Note: Although the contractor registration card states that the contractor has an active status, the contractor may have since been suspended.

[Statutory Authority: RCW 18.27.040, 18.27.070, 18.27.075, 18.27.125, 2001 c 159, and chapter 18.27 RCW. 03-20-097, § 296-200A-111, filed 9/30/03, effective 11/17/03. Statutory Authority: Chapter 18.27 RCW. 97-24-071, § 296-200A-111, filed 12/2/97, effective 1/5/98.]

WAC 296-200A-112 Who is liable when a city, town, or county fails to verify a contractor's registration? The city, county, or town that issues a building permit without verifying the contractor's registration may be liable for a maximum penalty amount of ten thousand dollars. See RCW 18.27.110(1).

[Statutory Authority: RCW 18.27.040, 18.27.070, 18.27.075, 18.27.125, 2001 c 159, and chapter 18.27 RCW. 03-20-097, § 296-200A-112, filed 9/30/03, effective 11/17/03. Statutory Authority: Chapter 18.27 RCW. 97-24-071, § 296-200A-112, filed 12/2/97, effective 1/5/98.]

WAC 296-200A-300 What violations of chapter 18.27 RCW can result in the issuance of a notice of infraction? (1) Under RCW 18.27.100, the department can issue a notice of infraction to a contractor and assess a penalty up to ten thousand dollars for:

(a) Using an unregistered name while advertising as a contractor;

(b) Using an unregistered name and address in advertising, correspondence, signs, documents, etc.;

(c) Using a false or expired registration number in advertisements where a contractor's registration number is required;

(d) Using the bond and insurance requirements of chapter 18.27 RCW to advertise as a bonded and insured contractor;

(e) Using a false registration number to either solicit business or pose as a contractor;

(f) Failing to include the contractor's current registration number in all advertising that shows the contractor's name or address. This registration number may be omitted in an alphabetized listing of registered contractors stating only the name, address, and telephone number. See RCW 18.27.100 (3).

(2) For violations of chapter 18.27 RCW, the department may issue penalties for violations and notices of infractions containing an order of correction to a person holding a registration, an applicant for registration, or a person acting in the capacity of a contractor, who is not otherwise exempted from chapter 18.27 RCW, that has violated chapter 18.27 RCW or this chapter. Such order shall require the violator to cease the unlawful advertising.

(3) The department may issue a notice of infraction to a contractor for failing to provide a residential or commercial customer with a proper disclosure statement before beginning a repair, alterations or construction project. See RCW 18.27.114(1) for both the project dollar cost limits affecting this requirement and a sample disclosure statement.

This requirement does not apply to either contracts authorized under chapter 39.04 RCW or to contractors contracting with other contractors.

(4) Under RCW 18.27.200, the department must issue a notice of infraction to a contractor for:

(a) Advertising, offering to work, submitting a bid, or performing any contracting work without being registered or when the contractor's registration is suspended or revoked; or

(b) Transferring a valid contractor registration to an unregistered contractor; or

(c) Allowing an unregistered contractor to work under a registration issued to another contractor.

Each day that a contractor works without being registered, works while the registration is suspended or revoked, or works under a registration issued to another contractor is a separate infraction. A cited contractor who continues to work while unregistered, or while their registration is suspended or revoked, or under a registration issued to another contractor is guilty of a separate misdemeanor for each day worked.

Each worksite at which a contractor works without being registered, works while the registration is suspended or revoked, or works under a registration issued to another contractor is a separate infraction. A cited contractor who continues to work while unregistered, or while their registration is suspended or revoked, or under a registration issued to another contractor is guilty of a separate misdemeanor for each worksite on which a violation occurs.

(5) See WAC 296-200A-400 for the specific monetary penalties associated with each of the violations discussed in this section.

[Statutory Authority: RCW 18.27.040, 18.27.070, 18.27.075, 18.27.125, 2001 c 159, and chapter 18.27 RCW. 03-20-097, § 296-200A-300, filed 9/30/03, effective 11/17/03. Statutory Authority: Chapter 18.27 RCW. 97-24-071, § 296-200A-300, filed 12/2/97, effective 1/5/98.]

WAC 296-200A-305 How does the department notify registered contractors regarding any unregistered subcontractors they may employ? (1) Unless a general contractor or its representative has been given written notification by the department that a subcontractor they have employed, who was registered when employed, has subsequently become unregistered, it is not unlawful for the general contractor to employ that subcontractor. (See RCW 18.27.020(3).)

(2) To comply with RCW 18.27.020(3), the department, when feasible, will issue a written "notice of unregistered subcontractors" to a general contractor or its representative.

(3) A "notice of unregistered subcontractor" issued under this section must be personally served on the general contractor named in the notice by the department's compliance inspectors or must be served by certified mail directed to the general contractor named in the notice.

(4) If the general contractor named in the notice is a firm or corporation, the notice may be personally served on any employee of the firm or corporation. If the notice is personally served upon an employee and the department is able to obtain the general contractor's address, the department must send a copy of the notice by certified mail to the general contractor within four days of service.

(5) A "notice of unregistered subcontractor" **is not** a notice of infraction.

(6) If, after receiving the "notice of unregistered subcontractor," the general contractor continues to employ the subcontractor in question, it will be liable for an infraction under RCW 18.27.200.

[Statutory Authority: RCW 18.27.040, 18.27.070, 18.27.075, 18.27.125, 2001 c 159, and chapter 18.27 RCW. 03-20-097, § 296-200A-305, filed 9/30/03, effective 11/17/03. Statutory Authority: Chapter 18.27 RCW. 97-24-071, § 296-200A-305, filed 12/2/97, effective 1/5/98.]

WAC 296-200A-310 What information must be included in a notice of infraction? When a contractor violates chapter 18.27 RCW, the department may issue a notice of infraction which contains the following:

(1) Notification that an infraction has been committed and shall be final unless contested;

(2) Notification that an infraction is a noncriminal offense and is not punishable by imprisonment;

(3) The specific violation(s) leading to the issuance of the infraction;

(4) The amount of penalty owed if the infraction is established;

(5) Notification of a right to a hearing (chapter 34.05 RCW) if requested within twenty days of service of the infraction;

(6) A reminder that the burden of proof in a hearing rests upon the state;

(7) Notification of a right to subpoena witnesses, including the inspector who issued the infraction;

(8) A reminder that a contractor is legally required to sign a notice of infraction and, by doing so, promises to respond to it;

(9) A reminder that a refusal to sign a notice of infraction is a misdemeanor and may be punishable by fine or imprisonment; and

(10) A reminder that a failure to respond to a notice of infraction is a misdemeanor and may be punishable by a fine or imprisonment.

[Statutory Authority: RCW 18.27.040, 18.27.070, 18.27.075, 18.27.125, 2001 c 159, and chapter 18.27 RCW. 03-20-097, § 296-200A-310, filed 9/30/03, effective 11/17/03. Statutory Authority: Chapter 18.27 RCW. 97-24-071, § 296-200A-310, filed 12/2/97, effective 1/5/98.]

WAC 296-200A-320 How can a notice of infraction be served? (1) A notice of infraction is served when the notice of infraction is issued personally to the contractor named in the notice by the compliance inspector issuing it or when the notice of infraction is sent by certified mail to the contractor.

(2) Any employee of a contractor can be served a notice of infraction at a job site. When the notice is signed by the employee, it is binding upon the contractor. To avoid confusion, the department must have the employee sign the "name of the contractor, by name of the employee." The signature will appear as:

Jane Doe Construction Co.
(by) Richard Roe, Employee.

[Statutory Authority: RCW 18.27.040, 18.27.070, 18.27.075, 18.27.125, 2001 c 159, and chapter 18.27 RCW. 03-20-097, § 296-200A-320, filed 9/30/03, effective 11/17/03. Statutory Authority: Chapter 18.27 RCW. 97-24-071, § 296-200A-320, filed 12/2/97, effective 1/5/98.]

WAC 296-200A-330 How are notices of infraction issued? (1) A notice of infraction may be issued personally to the contractor named in the notice by the compliance inspector issuing it or the notice may be sent to the contractor by certified mail.

(2) When the department's compliance inspector serves a notice of infraction upon a contractor's employee, the department shall within four days send a copy of the notice to the contractor by certified mail if the department is able to obtain the contractor's address. To ensure that the contractor receives this notice, the department will mail a second copy of the infraction by first class mail.

(3) If the department does not know the contractor's name and address, it does not need to mail a copy of the infraction to the contractor, however, the notice remains in force.

[Statutory Authority: RCW 18.27.040, 18.27.070, 18.27.075, 18.27.125, 2001 c 159, and chapter 18.27 RCW. 03-20-097, § 296-200A-330, filed 9/30/03, effective 11/17/03. Statutory Authority: Chapter 18.27 RCW. 97-24-071, § 296-200A-330, filed 12/2/97, effective 1/5/98.]

WAC 296-200A-340 How does a contractor appeal a notice of infraction? The contractor must file the notice of appeal with the department within twenty days after the earlier of service of the infraction on-site or service of the infraction mailed to the contractor. These time frames apply to the issuance of the infraction for all violations of chapter 18.27 RCW.

[Statutory Authority: RCW 18.27.040, 18.27.070, 18.27.075, 18.27.125, 2001 c 159, and chapter 18.27 RCW. 03-20-097, § 296-200A-340, filed 9/30/03, effective 11/17/03. Statutory Authority: Chapter 18.27 RCW. 97-24-071, § 296-200A-340, filed 12/2/97, effective 1/5/98.]

WAC 296-200A-350 Who presides over an appeal hearing and where is it held? An administrative law judge from the office of administrative hearings will preside over the hearing and give a decision. The hearing shall be conducted in the county where the infraction occurred. However, both the contractor and the department have a right to ask the administrative law judge to change the hearing's location.

[Statutory Authority: Chapter 18.27 RCW. 97-24-071, § 296-200A-350, filed 12/2/97, effective 1/5/98.]

WAC 296-200A-360 Who may represent the contractor and the department at the appeal hearing? (1) Contractors may be represented by themselves or be represented by an attorney at law qualified to practice in the state of Washington; or

(2) The department shall be represented by the office of the attorney general.

[Statutory Authority: RCW 18.27.040, 18.27.070, 18.27.075, 18.27.125, 2001 c 159, and chapter 18.27 RCW. 03-20-097, § 296-200A-360, filed 9/30/03, effective 11/17/03. Statutory Authority: Chapter 18.27 RCW. 97-24-071, § 296-200A-360, filed 12/2/97, effective 1/5/98.]

WAC 296-200A-370 How is the appeal hearing conducted? The hearing **process** shall be conducted according to chapter 34.05 RCW, Administrative Procedure Act and chapter 10-08 WAC. All appeals of the administrative law judge's decision shall be to the superior court according to chapter 34.05 RCW.

[Statutory Authority: RCW 18.27.040, 18.27.070, 18.27.075, 18.27.125, 2001 c 159, and chapter 18.27 RCW. 03-20-097, § 296-200A-370, filed 9/30/03, effective 11/17/03. Statutory Authority: Chapter 18.27 RCW. 97-24-071, § 296-200A-370, filed 12/2/97, effective 1/5/98.]

WAC 296-200A-380 What evidence is admissible in an appeal hearing? The admission of evidence is subject to chapter 34.05 RCW, Administrative Procedure Act.

[Statutory Authority: RCW 18.27.040, 18.27.070, 18.27.075, 18.27.125, 2001 c 159, and chapter 18.27 RCW. 03-20-097, § 296-200A-380, filed 9/30/03, effective 11/17/03. Statutory Authority: Chapter 18.27 RCW. 97-24-071, § 296-200A-380, filed 12/2/97, effective 1/5/98.]

WAC 296-200A-390 What does the department do with the appeal notices that they receive? (1) Appeal notices that are received timely are first reviewed by the department for purposes of reconsideration.

(2) Appeal notices that are not received timely will be returned to the appellant with appeal rights stated.

(3) Appeal notices that are received timely and are not reconsidered according to subsection (1) of this section are recorded and forwarded to the office of the attorney general then to the office of administrative hearings.

[Statutory Authority: RCW 18.27.040, 18.27.070, 18.27.075, 18.27.125, 2001 c 159, and chapter 18.27 RCW. 03-20-097, § 296-200A-390, filed 9/30/03, effective 11/17/03. Statutory Authority: Chapter 18.27 RCW. 97-24-071, § 296-200A-390, filed 12/2/97, effective 1/5/98.]

WAC 296-200A-400 What monetary penalties will be assessed for an infraction issued for violations of RCW 18.27.100, 18.27.110, 18.27.114 or 18.27.200? (1) Each day that a violation occurs will be a separate offense.

(2) Once a violation of chapter 18.27 RCW or this chapter becomes a final judgment, any additional violation within three years becomes a "second" or "additional" offense subject to an increased penalty as set forth in the tables that follow.

(3) Second or additional offenses subject to increased penalties also include individuals or entities.

(4) A person, firm, corporation, or other entity who violates a provision of chapter 18.27 RCW and this chapter is liable for a civil penalty based upon the following schedule.

(a)(i) Monetary penalties that may be assessed for a violation of RCW 18.27.100 (1), (2), (3), and (4) are:

Monetary Penalties	Dollar Amount
First Final Violation	$ 250.00*
Second Final Violation	$ 500.00
Third Final Violation	$ 1,000.00
Fourth Final Violation	$ 2,000.00
Fifth Final Violation	$ 4,000.00
Sixth Final Violation	$ 8,000.00
Each Additional Final Violation	$ 10,000.00

* Minimum penalty per violation. Once a violation of RCW 18.27.100 (1), (2), (3), and (4) becomes a final judgment, any additional violation is subject to an increased penalty as set forth in the table above.

(ii) Monetary penalties that may be assessed for a violation of RCW 18.27.100(5) are:

Monetary Penalties	Dollar Amount
First Final Violation	$ 1,000.00*
Second Final Violation	$ 2,000.00
Third Final Violation	$ 4,000.00
Fourth Final Violation	$ 8,000.00
Each Additional Final Violation	$10,000.00

* Minimum penalty per violation. Once a violation of RCW 18.27.100(5) becomes a final judgment, any additional violation is subject to an increased penalty as set forth in the table above.

(iii) Monetary penalties that may be assessed for a violation of RCW 18.27.100(6) are:

Monetary Penalties	Dollar Amount
First Final Violation	$ 1,000.00*
Second Final Violation	$ 2,000.00
Third Final Violation	$ 4,000.00
Each Additional Final Violation	$ 5,000.00

* Minimum penalty per violation. Once a violation of RCW 18.27.100(6) becomes a final judgment, any additional violation is subject to an increased penalty as set forth in the table above.

(b) Monetary penalties that may be assessed for a violation of RCW 18.27.110 are:

Monetary Penalties	Dollar Amount
First Final Violation	$ 250.00*
Second Final Violation	$ 500.00
Third Final Violation	$ 1,000.00
Fourth Final Violation	$ 2,000.00
Fifth Final Violation	$ 4,000.00
Sixth Final Violation	$ 8,000.00
Each Additional Final Violation	$10,000.00

* Minimum penalty per violation. Once a violation of RCW 18.27.110 becomes a final judgment, any additional violation is subject to an increased penalty as set forth in the table above.

(c) Monetary penalties that may be assessed for a violation of RCW 18.27.114 are:

Monetary Penalties	Dollar Amount
First Final Violation	$ 500.00*
Second Final Violation	$ 1,000.00
Third Final Violation	$ 2,000.00
Fourth Final Violation	$ 4,000.00
Each Additional Final Violation	$ 5,000.00

* Minimum penalty per violation. Once a violation of RCW 18.27.114 becomes a final judgment, any additional violation is subject to an increased penalty as set forth in the table above.

(d) Monetary penalties that may be assessed for a violation of RCW 18.27.200 according to RCW 18.27.340 (1) and (3) are:

(i)

RCW 18.27.340(1) Monetary Penalties	Dollar Amount
First Final Violation	$ 500.00*
Second Final Violation	$ 1,000.00
Third Final Violation	$ 2,000.00
Fourth Final Violation	$ 4,000.00
Each Additional Final Violation	$ 5,000.00

* Minimum penalty per violation. Once a violation of RCW 18.27.340(1) becomes a final judgment, any additional violation is subject to an increased penalty as set forth in the table above.

(ii)

RCW 18.27.340(3) Monetary Penalties	Dollar Amount
First Final Violation	$1,000.00 *
Second Final Violation	$2,000.00
Third Final Violation	$4,000.00
Each Additional Final Violation	$5,000.00

* Minimum penalty per violation. Once a violation of RCW 18.27.340(3) becomes a final judgment, any additional violation is subject to an increased penalty as set forth in the above table. However, if the unregistered contractor becomes registered within ten days of receiving the notice of infraction and the notice is the contractor's first offense, the director may reduce the penalty. In no case can the director reduce the penalty below five hundred dollars.

(4) For violations of RCW 18.27.200, the director may waive a penalty collection from a contractor in exchange for a payment of restitution to a damaged consumer in an amount at least equal to the assessed penalty. Prior to the infraction becoming final, the contractor must provide to the department a notarized release from the damaged consumer stating that he or she paid the damaged consumer in an amount at least equal to the assessed penalty.

(5)(a) The department shall deny an application for registration if:

(i) The applicant has been previously performing work subject to this chapter as a sole proprietor, partnership, corporation, or other entity and the department has notice that the applicant has an unsatisfied final judgment against him or her in an action based on this chapter or the applicant owes the department money for penalties assessed or fees due under this chapter as a result of a final judgment;

(ii) The applicant was a principal or officer of a partnership, corporation, or other entity that either has an unsatisfied final judgment against it in an action that was incurred for work performed subject to this chapter or owes the department money for penalties assessed or fees due under this chapter as a result of a final judgment; or

(iii) The applicant does not have a valid unified business identifier number, if required by the department of revenue.

(b) The department shall suspend an active registration if the department has notice that the registrant is a sole proprietor or a principal or officer of a registered contractor that has an unsatisfied final judgment against it for work within the scope of this chapter.

[Statutory Authority: RCW 18.27.040, 18.27.070, 18.27.075, 18.27.125, 2001 c 159, and chapter 18.27 RCW. 03-20-097, § 296-200A-400, filed 9/30/03, effective 11/17/03. Statutory Authority: Chapter 18.27 RCW. 97-24-071, § 296-200A-400, filed 12/2/97, effective 1/5/98.]

WAC 296-200A-405 When must a contractor pay assessed monetary penalties? (1) If a contractor named in a notice of infraction does not choose to appeal the notice, then the contractor must pay the department the amount of the penalty prescribed for the infraction.

(2) After an administrative law judge decides that an infraction has been committed, a contractor who does not appeal the decision to a superior court, has thirty days to pay any outstanding monetary penalties. Failure to do so is a misdemeanor and may be prosecuted in the county where the infraction occurred.

(3) A contractor who has exhausted all appeal opportunities and fails to pay an assessed monetary penalty within thirty days after exhausting those opportunities shall be guilty of a misdemeanor and may be prosecuted in the county where the infraction occurred.

[Statutory Authority: RCW 18.27.040, 18.27.070, 18.27.075, 18.27.125, 2001 c 159, and chapter 18.27 RCW. 03-20-097, § 296-200A-405, filed 9/30/03, effective 11/17/03. Statutory Authority: Chapter 18.27 RCW. 97-24-071, § 296-200A-405, filed 12/2/97, effective 1/5/98.]

WAC 296-200A-900 What fees does the department charge contractors for issuance, renewal, reregistration, and reinstatement of certificates of registration? The department charges the following fees:

(1) $106.50 for each issuance, renewal or reregistration of a certificate of registration for contractors. This registration is valid for two years from date of issuance, renewal or reregistration or until it is suspended or revoked.

(2) $50.40 for the reinstatement of a certificate of registration.

(3) $11.90 for providing a duplicate certificate of registration.

(4) $24.10 for each requested certified letter prepared by the department.

(5) $162.00 for the construction and electrical contractor listing publication on CD ROM per year, prorated according to the number of issues left in the subscription year, which runs from November 1 through October 31. Each issue costs $13.50.

(6) $2.00 per copy for documents copied from a contractor's file. The maximum copy charge for copies from one contractor's file will be $27.20.

(7) $20.00 is required to cover the costs for the service of process in an action against a contractor, the contractor's bond, or the deposit under RCW 18.27.040.

(8) $25.00 is required to cover the costs for the service of processing refunds.

[Statutory Authority: Chapters 18.27 and 43.22 RCW. 04-12-048, § 296-200A-900, filed 5/28/04, effective 6/30/04. Statutory Authority: RCW 18.27.040, 18.27.070, 18.27.075, 18.27.125, 2001 c 159, and chapter 18.27 RCW. 03-20-097, § 296-200A-900, filed 9/30/03, effective 11/17/03. Statutory Authority: RCW 43.22.350, 43.22.434, 43.22.480, 43.22.500, 18.27.040, 18.27.070, 18.27.075, 70.87.030, 19.28.041, 19.28.051, 19.28.101, 19.28.121, 19.28.161, 19.28.201, 19.28.211, 19.28.341, 2001 c 7, 2002 c 249, and chapters 19.28, 43.22, 18.27, and 70.87 RCW. 02-12-022, § 296-200A-900, filed 5/28/02, effective 6/28/02. Statutory Authority: RCW 43.22.350, 43.22.434, 43.22.480, 43.22.500, 18.27.070, 18.27.075, 70.87.030, 19.28.041, 19.28.051, 19.28.101, 19.28.121, 19.28.161, 19.28.201, 19.28.211, 19.28.341, 2001 c 159, and chapters 43.22, 19.28, 18.27, and 70.87 RCW. 01-12-035, § 296-200A-900, filed 5/29/01, effective

6/29/01. Statutory Authority: Chapters 43.22, 18.27, 70.87 and 19.28 RCW. 99-12-080, § 296-200A-900, filed 5/28/99, effective 6/28/99. Statutory Authority: Chapters 18.106, 18.27 and 43.22 RCW. 98-12-041, § 296-200A-900, filed 5/29/98, effective 6/30/98. Statutory Authority: Chapter 18.27 RCW. 97-24-071, § 296-200A-900, filed 12/2/97, effective 1/5/98.]

Chapter 296-301 WAC
SAFETY STANDARDS FOR THE TEXTILE INDUSTRY

WAC

296-301-010	Textiles—Application requirements.
296-301-015	Definitions applicable to this chapter.
296-301-020	General safety requirements.
296-301-025	Openers and pickers.
296-301-030	Cotton cards.
296-301-035	Garnett machines.
296-301-040	Spinning mules.
296-301-045	Slashers—Scope and application.
296-301-04501	Cylinder dryers.
296-301-04503	Enclosed hot air dryers.
296-301-050	Warpers.
296-301-055	Drawing frames, slubbers, roving parts, cotton combers, ring spinning frames, twisters.
296-301-060	Gill boxes.
296-301-065	Heavy draw boxes, finishers, and speeders used in worsted drawing.
296-301-070	Silver and ribbon lappers (cotton).
296-301-075	Looms.
296-301-080	Shearing machines.
296-301-085	Continuous bleach range (cotton and rayon).
296-301-090	Kiers.
296-301-095	Gray and white bins.
296-301-100	Mercerizing range (piece goods).
296-301-105	Tenter frames.
296-301-110	Dyeing jigs.
296-301-115	Padders—Nip guards.
296-301-120	Drying cans.
296-301-125	Ironer.
296-301-130	Extractors.
296-301-135	Nip guards.
296-301-140	Sanforizing and palmer machine.
296-301-145	Rope washers.
296-301-150	Laundry washer tumbler or shaker.
296-301-155	Printing machine (roller type).
296-301-160	Calenders.
296-301-165	Rotary staple cutters.
296-301-170	Clothing folding machine.
296-301-175	Hand bailing machine.
296-301-180	Roll bench.
296-301-185	Cuttle or swing folder (overhead type).
296-301-190	Color-mixing room.
296-301-195	Open tanks and vats for mixing and storage of hot or corrosive liquids.
296-301-200	Dye kettles and vats.
296-301-205	Acid carboys.
296-301-210	Handling caustic soda and caustic potash.
296-301-215	First aid.
296-301-220	Personal protective equipment.
296-301-225	Workroom ventilation.

WAC 296-301-010 Textiles—Application requirements. (1) Application. The requirements of this chapter for textile safety apply to the design, installation, processes, operation, and maintenance of textile machinery, equipment, and other plant facilities in all plants engaged in the manufacture and processing of textiles, except those processes used exclusively in the manufacture of synthetic fibers.

(2) These standards shall be augmented by the Washington state general safety and health standards, and any other regulations of general application which are or will be made applicable to all industries.

(3) The provisions of this chapter shall prevail in the event of conflict with or duplication of, provisions contained in chapter 296-24 WAC, the general safety and health standards, chapter 296-62 WAC, the general occupational health standards, and chapter 296-800 WAC, the safety and health core rule book.

(4) WAC 296-24-012 and 296-800-360 shall apply where applicable to this industry.

[Statutory Authority: RCW 49.17.010, [49.17].040, and [49.17].050. 01-11-038, § 296-301-010, filed 5/9/01, effective 9/1/01; Order 74-19, § 296-301-010, filed 5/6/74.]

WAC 296-301-015 Definitions applicable to this chapter. (1) "Belt shifter" means a device for mechanically shifting a belt from one pulley to another.

(2) "Belt shifter lock" means a device for positively locking the belt shifter in position while the machine is stopped and the belt is idling on the loose pulleys.

(3) "Calendar" means a machine consisting of a set of heavy rollers mounted on vertical side frames and arranged to pass cloth between them. Calendars may have two to ten rollers, or bowls, some of which can be heated.

(4) "Embossing calender" means a calender with two or more rolls, one of which is engraved for producing figured effects of various kinds on a fabric.

(5) "Cans (drying)" means hollow cylindrical drums mounted in a frame so they can rotate. They are heated with steam and are used to dry fabrics or yarn as it passes around the perimeter of the can.

(6) "Carbonizing" means the removing of vegetable matter such as burns, straws, etc., from wool by treatment with acid, followed by heat. The undesired matter is reduced to a carbon-like form which may be removed by dusting or shaking.

(7) "Card" machine means a machine consisting of cylinders of various sizes—and in certain cases flats—covered with card clothing and set in relation to each other so that fibers in staple form may be separated into individual relationship. The speed of the cylinders and their direction of rotation varies. The finished product is delivered as a sliver. Cards of different types are: The revolving flat card, the roller-and-clearer card, etc.

(8) "Card clothing" means the material with which many of the surfaces of a card are covered; e.g., the cylinder, doffer, etc. It consists of a thick foundation material, usually made of textile fabrics, through which are pressed many fine, closely spaced, specially bent wires.

(9) "Comber" means a machine for combing fibers of cotton, wool, etc. The essential parts are a device for feeding forward a fringe of fibers at regular intervals and an arrangement of combs or pins which, at the right time, pass through the fringe. All tangled fibers, short fibers, and neps are removed and the long fibers are laid parallel.

(10) "Combing machinery" means a general classification, including combers, sliver lap machines, ribbon lap machines, and gill boxes, but excluding cards.

(11) "Cutter (rotary staple)" means a machine consisting of one or more rotary blades used for the purpose of cutting textile fibers into staple lengths.

(12) "Exposed to contact" means that the location of an object, material, nip point, or point of operation is such that a person is liable to come in contact with it in his normal course of employment.

(13) "Garnett machine" means any of a number of types of machines for opening hard twisted waste of wool, cotton, silk, etc. Essentially, such machines consist of a lickerin; one or more cylinders, each having a complement worker and stripper rolls; and a fancy roll and doffer. The action of such machines is somewhat like that of a wool card, but it is much more severe in that the various rolls are covered with garnett wire instead of card clothing.

(14) "Gill box" means a machine used in the worsted system of manufacturing yarns. Its function is to arrange the fibers in parallel order. Essentially, it consists of a pair of feed rolls and a series of followers where the followers move at a faster surface speed and perform a combing action.

(15) "Interlock" means a device that operates to prevent the operation of machine while the cover or door of the machine is open or unlocked, and which will also hold the cover or door closed and locked while the machine is in motion.

(16) "Jig (dye)" means a machine for dyeing piece goods. The cloth, at full width, passes from a roller through the dye liquor in an open vat and is then wound on another roller. The operation is repeated until the desired shade is obtained.

(17) "Kier" means a large metal vat, usually a pressure type, in which fabrics may be boiled out, bleached, etc.

(18) "Lapper (ribbon)" means a machine used to prepare laps for feeding a cotton comb; its purpose is to provide a uniform lap in which the fibers have been straightened as much as possible.

(19) "Lapper (sliver)" means a machine in which a number of parallel card slivers are drafted slightly, laid side by side in a compact sheet, and wound into a cylindrical package.

(20) "Loom" means a machine for effecting the interlacing of two series of yarns crossing one another at right angles. The warp yarns are wound on a warp beam and pass through heddles and reed. The filling is shot across in a shuttle and settled in place by reed and lay, and the fabric is wound on a cloth beam.

(21) "Starch mangle" means a mangle that is used specifically for starching cotton goods. It commonly consists of two large rolls and a shallow open vat with several immersion rolls. The vat contains the starch solution.

(22) "Water mangle" means a calender having two or more rolls used for squeezing water from fabrics before drying. Water mangles also may be used in other ways during the finishing of various fabrics.

(23) "Mule" means a type of spinning frame having a head stock and a carriage as its two main sections. The head stock is stationary. The carriage is movable and it carries the spindles which draft and spin the roving into the yarn. The carriage extends over the whole width of the machine and moves slowly toward and away from the head stock during the spinning operation.

(24) "Nip" means the point of contact between two in-running rolls.

(25) "Openers and pickers" means a general classification which includes breaker pickers, intermediate pickers, finisher pickers, single process pickers, multiple process pickers, willow machines, card and picker waste cleaners, thread extractors, shredding machines, roving waste openers, shoddy pickers, bale breakers, feeders, vertical openers, lattice cleaners, horizontal cleaners, and any similar machinery equipped with either cylinders, screen section, calender section, rolls, or beaters used for the preparation of stock for further processing.

(26) "Paddler" means equipment consisting of a trough for a solution and two or more squeeze rolls between which cloth passes after being passed through a mordant or dye bath.

(27) "Point of operation" means that part of the machine where the work of cutting, shearing, squeezing, drawing, or manipulating the stock in any other way is done.

(28) "Roller printing machine" means a machine consisting of a large central cylinder, or pressure bowl, around the lower part of the perimeter of which is placed a series of engraved color rollers (each having a color trough), a furnisher roller, doctor blades, etc. The machine is used for printing fabrics.

(29) "Continuous bleaching ranges" means ranges of several types and may be made for cloth in rope or open-width form. The goods, after wetting out, pass through a squeeze roll into a saturator containing a solution of caustic soda and then to an enclosed J-box. A V-shaped arrangement is attached to the front part of the J-box for uniform and rapid saturation of the cloth with steam before it is packed down in the J-box. The cloth, in a single strand rope form, passes over a guide roll down the first arm of the "V" and up the second. Steam is injected into the "V" at the upper end of the second arm so that the cloth is rapidly saturated with steam at this point. The J-box capacity is such that cloth will remain hot for a sufficient time to complete the scouring action. It then passes a series of washers with a squeeze roll in between. The cloth then passes through a second set of saturator, J-box, and washer, where it is treated with the peroxide solution. By slight modification of the form of the unit, the same process can be applied to open-width cloth.

(30) "Mercerizing range" generally means a 3-bowl mangle, a tenter frame, and a number of boxes for washing and scouring. The whole setup is in a straight line and all parts operate continuously. The combination is used to saturate the cloth with sodium hydroxide, stretch it while saturated, and washing out most of the caustic before releasing tension.

(31) "Sanforizing machine" means a machine consisting of a large steam-heated cylinder, an endless, thick, woolen felt blanket which is in close contact with the cylinder for most of its perimeter, and an electrically heated shoe which presses the cloth against the blanket while the latter is in a stretched condition as it curves around feed-in roll.

(32) "Shearing machine" means a machine used in shearing cloth. Cutting action is provided by a number of steel blades spirally mounted on a roller. The roller rotates in close contact with a fixed ledger blade. There may be from one to six such rollers on a machine.

(33) "Singeing machine" means a machine used particularly with cotton, comprised of a heated roller, plate, or an open gas flame. The material is rapidly passed over the roller or the plate or through the open gas flame to remove fuzz or hairiness on yarn or cloth by burning.

(34) "Slasher" means a machine used for applying a size mixture to warp yarns. Essentially, it consists of a stand for

holding section beams, a size box, one or more cylindrical dryers or an enclosed hot air dryer, and a beaming end for finding the yarn on the loom beams.

(35) "Industrial organic solvent" means any organic volatile liquid or compound, or any combination of these substances which are used to dissolve or suspend a nonvolatile or slightly volatile substance for industrial utilization. It shall also apply to such substances when used as detergents or cleansing agents. It shall not apply to petroleum products when such products are used as fuel.

(36) "Tenter frame" means a machine for drying cloth under tension. It essentially consists of a pair of endless traveling chains fitted with clips of fine pins and carried on tracks. The cloth is firmly held at the selvages by the two chains which diverge as they move forward so that the cloth is brought to the desired width.

(37) "Warper" means any machine for preparing and arranging the yarns intended for the warp of a fabric, specifically, a beam warper.

[Order 74-19, § 296-301-015, filed 5/6/74.]

WAC 296-301-020 General safety requirements. (1) Means of stopping machines. Every textile machine shall be provided with individual mechanical or electrical means for stopping such machines. On machines driven by belts and shafting a locking-type shifter or an equivalent positive device shall be used. On operations where injury to the operator might result if motors were to restart after power failures, provision shall be made to prevent machines from automatically restarting upon restoration of power.

(2) Handles. Stopping and starting handles shall be designed to the proper length to prevent the worker's hand or fingers from striking against any revolving part, gear guard, or any other part of the machine.

(3) Machine guarding. An employer must ensure that power transmission parts are guarded according to the requirements of WAC 296-24-205 through 296-24-20527.

(4) Housekeeping. Aisles and working spaces shall be kept in good order in accordance with requirements of WAC 296-24-735 through 296-24-73505 and WAC 296-800-220.

(5) Inspection and maintenance. All guards and other safety devices, including starting and stopping devices, shall be properly maintained.

(6) Lighting and illumination. Lighting and illumination shall conform to the safety and health core rule book, WAC 296-800-210.

(7) Identification of piping systems. Identification of piping systems shall conform to American National Standard A13.1-1956.

(8) Steam pipes. All pipes carrying steam or hot water for process or servicing machinery, when exposed to contact and located within seven feet of the floor or working platform shall be covered with a heat-insulating material, or guarded with equivalent protection.

[Statutory Authority: RCW 49.17.010, 49.17.040, 49.17.050, 49.17.060. 04-18-080, § 296-301-020, filed 8/31/04, effective 11/1/04; 04-14-028, § 296-301-020, filed 6/29/04, effective 1/1/05. Statutory Authority: RCW 49.17.010, [49.17].040, and [49.17].050. 01-11-038, § 296-301-020, filed 5/9/01, effective 9/1/01; 99-17-094 and 99-22-093, § 296-301-020, filed 8/17/99 and 11/2/99, effective 1/1/00; 98-10-073, 98-24-120 and 99-12-091, § 296-301-020, filed 5/4/98, 12/2/98 and 6/1/99, effective 1/1/00; Order 74-19, § 296-301-020, filed 5/6/74.]

WAC 296-301-025 Openers and pickers. (1) Beater guards. When any opening or picker machinery is equipped with a beater, such beater shall be provided with metal covers which will prevent contact with the beater. Such covers shall be provided with an interlock which will prevent the cover from being raised while the machine is in motion and prevent the operation of the machine while the cover is open.

(2) Cleanout holes. Cleanout holes within reaching distance of the fan or picker beater shall have their covers securely fastened and they shall not be opened while the machine is in motion.

(3) Feed rolls. The feed rolls on all opening and picking machinery shall be covered with a guard designed to prevent the operator from reaching the nip while the machinery is in operation.

(4) Removal of foreign ferrous material. All textile opener lines shall be equipped with magnetic separators, tramp iron separators, or other means for the removal of foreign ferrous material.

[Order 74-19, § 296-301-025, filed 5/6/74.]

WAC 296-301-030 Cotton cards. (1) Enclosures. Cylinder and lickerins shall be equipped with guards and the doffers should be enclosed.

(2) Enclosure fastenings. The enclosures or covers shall be kept in place while the machine is in operation, except when stripping or grinding.

(3) Stripping rolls. On operations calling for flat strippings which are allowed to fall on the doffer cover, where such strippings are removed by hand, the doffer cover shall be kept closed and securely fastened to prevent the opening of the cover while the machine is in operation. When it becomes necessary to clean the cards while they are in motion, a long-handled brush or dust mop shall be used.

[Order 74-19, § 296-301-030, filed 5/6/74.]

WAC 296-301-035 Garnett machines. (1) Lickerin. Garnett lickerins shall be enclosed.

(2) Fancy rolls. Garnett fancy rolls shall be enclosed by covers. These shall be installed in a way that keeps worker rolls reasonably accessible for removal or adjustment.

(3) Underside of machine. The underside of the garnett shall be guarded by a screen mesh or other form of enclosure to prevent access while machine is running.

[Order 74-19, § 296-301-035, filed 5/6/74.]

WAC 296-301-040 Spinning mules. A substantial fender of metal or hardwood shall be installed in front of the carriage wheels, the fender to extend to within one-fourth inch of the rail.

[Order 74-19, § 296-301-040, filed 5/6/74.]

WAC 296-301-045 Slashers—Scope and application. All sections of this chapter which include WAC 296-301-045 in the section number apply to slashers.

[Order 74-19, § 296-301-045, filed 5/6/74.]

WAC 296-301-04501 Cylinder dryers. (1) Reducing valves, safety valves, and pressure gages. Reducing valves, safety valves, and pressure gages shall conform to the ASME

Pressure Vessel Code, section VIII, Unfired Pressure Vessels, 1968.

(2) Vacuum relief valves. Vacuum relief valves shall conform to the ASME Code for Pressure Vessels, section VIII, Unfired Pressure Vessels, 1968.

(3) Lever control. When slashers are operated by control levers, these levers shall be connected to a horizontal bar or treadle located not more than 69 inches above the floor to control the operation from any point.

(4) Pushbutton control. Slashers operated by pushbutton control shall have stop and start buttons located at each end of the machine, and additional buttons located on both sides of the machine, at the size box and the delivery end. If calender rolls are used, additional buttons shall be provided at both sides of the machine at points near the nips, except when slashers are equipped with an enclosed dryer.

(5) Nip guards. All nip guards shall comply with the requirements of WAC 296-301-04503(4).

(6) Cylinder enclosure. When enclosures or hoods are used over cylinder drying rolls, such enclosures or hoods shall be provided with an exhaust system which will effectively prevent wet air and steam from escaping into the workroom.

(7) Expansion chambers. Slasher kettles and cookers shall be provided with expansion chambers in the covers, or drains, to prevent surging over. Steam-control valves shall be so located that they can be operated without exposing the worker to moving parts, hot surfaces, or steam.

[Order 74-19, § 296-301-04501, filed 5/6/74.]

WAC 296-301-04503 Enclosed hot air dryers. (1) Lever control. When slashers are operated by control levers, these levers shall be connected to a horizontal bar or treadle located not more than 69 inches above the floor to control the operation from any point.

(2) Push-button control. Slashers operated by push-button control shall have one start button at each end of the machine and stop buttons shall be located on both sides of the machines at intervals spaced not more than 6 feet on centers.

Note: Inching buttons should be installed.

(3) Dryer enclosure. The dryer enclosure shall be provided with an exhaust system which will effectively prevent wet air and steam from escaping into the workroom.

(4) Nip guards. All nip guards shall comply with Table R-1.

TABLE R-1
GUARD OPENINGS

Openings in the guard or between the guard and working surface shall not be greater than the following:

Distance of opening from nip point	Maximum width of opening
0 to 1 1/2	1/4
1 1/2 to 2 1/2	3/8
2 1/2 to 3 1/2	1/2
3 1/2 to 5 1/2	5/8
5 1/2 to 6 1/2	3/4
6 1/2 to 7 1/2	7/8
7 1/2 to 8 1/2	1 1/4

The measurements in Table R-1 are all in inches.

(5) Expansion chambers. Slasher kettles and cookers shall be provided with expansion chambers in the covers, or drains, to prevent surging over. Steam control valves shall be so located that they can be operated without exposing the worker to moving parts, hot surfaces, or steam.

[Order 74-19, § 296-301-04503, filed 5/6/74.]

WAC 296-301-050 Warpers. (1) Swiveled double-bar gates. Swiveled double-bar gates shall be installed on all warpers operating in excess of 450 yards per minute. These gates shall be so interlocked that the machine cannot be operated until the gate is in the "closed position," except for the purpose of inching or jogging.

(2) Closed position. "Closed position" shall mean that the top bar of the gate shall be at least 42 inches from the floor or working platform; and the lower bar shall be at least 21 inches from the floor or working platform; and the gate shall be located 15 inches from the vertical tangent to the beam head.

[Order 74-19, § 296-301-050, filed 5/6/74.]

WAC 296-301-055 Drawing frames, slubbers, roving parts, cotton combers, ring spinning frames, twisters. Gear housing covers on all installations of drawing frames, slubbers, roving frames, cotton combers, ring spinning frames, and twisters shall be equipped with interlocks.

[Order 74-19, § 296-301-055, filed 5/6/74.]

WAC 296-301-060 Gill boxes. (1) Pin guard. A guard shall be placed ahead of the feed end and shall be so designed that it will prevent the worker's fingers from being caught in the pins of the intersecting fallers.

(2) Nip guards. All nip guards shall comply with the requirements of WAC 296-301-04503(4).

[Order 74-19, § 296-301-060, filed 5/6/74.]

WAC 296-301-065 Heavy draw boxes, finishers, and speeders used in worsted drawing. (1) Band pulley covers. Covers for band pulleys shall be closed when the machine is in motion.

(2) Benches or working platforms. Benches or working platforms approximately 10 inches in height and 8 inches in width should be installed along the entire running length of the machine for the worker to stand on while creeling the machine. Such benches or platforms shall be covered with an abrasive or nonslip material.

[Order 74-19, § 296-301-065, filed 5/6/74.]

WAC 296-301-070 Silver and ribbon lappers (cotton). Cover guard. An interlocking cover guard shall be installed over the large calender drums and the lap spool, designed to prevent the operator from coming in contact with the nip.

[Order 74-19, § 296-301-070, filed 5/6/74.]

WAC 296-301-075 Looms. (1) Shuttle guard. Each loom shall be equipped with a guard designed to minimize the danger of the shuttle flying out of the shed.

(2) Protection for loom fixer. Provisions shall be made so that every loom fixer can prevent the loom from being started while he is at work on the loom. This may be accomplished by means of a lock, the key to which is retained in the possession of the loom fixer, or by some other effective means to prevent starting the loom.

[Order 74-19, § 296-301-075, filed 5/6/74.]

WAC 296-301-080 Shearing machines. All revolving blades on shearing machines shall be guarded so that the opening between the cloth surface and the bottom of the guard will not exceed three-eighths inch.

[Order 74-19, § 296-301-080, filed 5/6/74.]

WAC 296-301-085 Continuous bleach range (cotton and rayon). (1) J-box protection. Each valve controlling the flow of steam, injurious gases, or liquids into a J-box shall be equipped with a chain, lock, and key, so that any worker who enters the J-box can lock the valve and retain the key in his possession. Any other method which will prevent steam, injurious gases, or liquids from entering the J-box while the worker is in it will comply with this provision.

(2) Open-width bleaching. The nip of all in-running rolls on open-width bleaching machine rolls shall be protected with a guard to prevent the worker from being caught at the nip. The guard shall extend across the entire length of the nip.

[Order 74-19, § 296-301-085, filed 5/6/74.]

WAC 296-301-090 Kiers. (1) Reducing valves, safety valves, and pressure gages. Reducing valves, safety valves, and pressure gages shall conform to the ASME Code for Unfired Pressure Vessels, section VIII, Unfired Pressure Vessels, 1968.

(2) Kier valve protection. Each valve controlling the flow of steam, injurious gases, or liquids into a kier shall be equipped with a chain, lock, and key, so that any worker who enters the kier can lock the valve and retains the key. Any other method which will prevent steam, injurious gases, or liquids from entering the kier while the worker is in it will be acceptable.

[Order 74-19, § 296-301-090, filed 5/6/74.]

WAC 296-301-095 Gray and white bins. Guard rails conforming to WAC 296-24-750 through 296-24-75011, of the general safety and health standards, shall be provided where workers are required to plait by hand from the top of the bin so as to protect the worker from falling to a lower level.

[Order 74-19, § 296-301-095, filed 5/6/74.]

WAC 296-301-100 Mercerizing range (piece goods). (1) Stopping devices. A stopping device shall be provided at each end of the machine.

(2) Frame ends. A guard shall be installed at each end of the frame between the in-running chain and the clip opener, to prevent the worker's fingers from being caught.

(3) Mangle and washers. The nip at the in-running rolls shall conform to WAC 296-301-04503(4).

[Order 74-19, § 296-301-100, filed 5/6/74.]

WAC 296-301-105 Tenter frames. (1) Stopping devices. A stopping device shall be provided at each end of the machine.

(2) Frame ends. A guard shall be installed at each end of the frame at the in-running chain and clip opener.

(3) Oil cups. Oil cups shall be located to permit safe and easy access. They shall be of the extension type to permit oiling while machines are operating.

[Order 74-19, § 296-301-105, filed 5/6/74.]

WAC 296-301-110 Dyeing jigs. (1) Stopping devices. Each dye jig shall be equipped with individual mechanical or electrical means for stopping the machine.

(2) Roll arms. Roll arms on jigs shall be built to allow for extra large batches, and to prevent the center bar from being forced off, causing the batch to fall.

[Order 74-19, § 296-301-110, filed 5/6/74.]

WAC 296-301-115 Padders—Nip guards. All nip guards shall comply with the requirements of WAC 296-301-04503(4).

[Order 74-19, § 296-301-115, filed 5/6/74.]

WAC 296-301-120 Drying cans. (1) Pressure reducing valves and pressure gages. Pressure reducing valves and pressure gages shall conform to the ASME Code for Pressure Vessels, section VIII, 1968, Unfired Pressure Vessels.

(2) Vacuum collapse. If cans are not designed to prevent vacuum collapse, each can shall be equipped with one or more vacuum relief valves with openings of such a size as to prevent the collapse of the can if vacuum occurs.

[Order 74-19, § 296-301-120, filed 5/6/74.]

WAC 296-301-125 Ironer. (1) Each flat-work or collar ironer shall be equipped with a safety bar or other guard across the entire front of the feed or first pressure rolls, so arranged that the striking of the bar or guard by the hand of the operator or other person will stop the machine. The pressure rolls shall be covered or guarded so that the operator or other person cannot reach into the rolls without removing the guard. This may be either a vertical guard on all sides or a complete cover. If a vertical guard is used, the distance from the floor or working platform to the top of guard shall be not less than 6 feet.

[Order 74-19, § 296-301-125, filed 5/6/74.]

WAC 296-301-130 Extractors. (1) Centrifugal extractor.

(a) Cover. Each extractor shall be equipped with a metal cover.

(b) Interlocking device. Each extractor shall be equipped with an interlocking device that will prevent the cover from being opened while the basket is in motion, and also prevent the power operation of the basket while the cover is open.

(c) Brakes. Each extractor shall be equipped with a mechanically or electrically operated brake to quickly stop the basket when the power driving the basket is shut off.

(d) Maximum allowable speed. Each centrifugal extractor shall be effectively secured in position on the floor or foundation so as to eliminate unnecessary vibration, and shall

not be operated at a speed greater than the manufacturer's rating, which shall be stamped where easily visible in letters not less than one-quarter inch in height. The maximum allowable speed shall be given in revolutions per minute (rpm).

(2) Engine drum extractor—Over-speed governor. Each engine individually driving an extractor shall be provided with an engine stop approved as specified in WAC 296-24-006, of the general safety and health standards, and a speed limit governor.

(3) Squeezer or wringer extractor—Nip guards. All nip guards shall comply with the requirements of WAC 296-301-04503(4).

[Order 74-19, § 296-301-130, filed 5/6/74.]

WAC 296-301-135 Nip guards. All nip guards for water mangle, starch mangle, backwasher (worsted yarn) crabbing machines, decating machines, shall comply with the requirements of WAC 296-301-04503(4).

[Order 74-19, § 296-301-135, filed 5/6/74.]

WAC 296-301-140 Sanforizing and palmer machine. A safety trip rod, cable, or wire center cord shall be provided across the front and back of all palmer cylinders extending the length of the face of the cylinder. It shall operate readily whether pushed or pulled. This safety trip shall be not more than 72 inches above the level on which the operator stands and shall be readily accessible.

[Order 74-19, § 296-301-140, filed 5/6/74.]

WAC 296-301-145 Rope washers. (1) Splash guard. Splash guards shall be installed on all rope washers unless the machine is so designed as to prevent the water or liquid from splashing the operator, the floor, or working surface.

(2) Safety stop bar. A safety trip rod, cable or wire center cord shall be provided across the front and back of all rope washers extending the length of the face of the washer. It shall operate readily whether pushed or pulled. This safety trip shall be not more than 72 inches above the level on which the operator stands and shall be readily accessible.

[Order 74-19, § 296-301-145, filed 5/6/74.]

WAC 296-301-150 Laundry washer tumbler or shaker. (1) Interlocking device. Each drying tumbler, each double cylinder shaker or clothes tumbler, and each washing machine shall be equipped with an interlock device which will prevent the power operation of the inside cylinder when the outer door on the case or shell is open, and which will also prevent the outer door on the case or shell from being opened without shutting off the power. This should not prevent the movement of the inner cylinder by means of a hand operated mechanism or an "inching device."

(2) Means of holding covers or doors in open position. Each enclosed barrel shall also be equipped with adequate means for holding open the doors or covers of the inner and outer cylinders or shells while it is being loaded or unloaded.

[Order 74-19, § 296-301-150, filed 5/6/74.]

WAC 296-301-155 Printing machine (roller type). (1) Nip guards. All nip guards shall comply with the requirements of WAC 296-301-04503(4).

(2) Crown wheel and roller gear nip protection. The engraved roller gears and the large crown wheel shall be provided with a protective disc which will enclose the nips of the in-running gears. Individual discs for each nip will be deemed to be in compliance with the provisions of WAC 296-301-04503(4).

[Order 74-19, § 296-301-155, filed 5/6/74.]

WAC 296-301-160 Calenders. The nip at the in-running side of the rolls shall be provided with a guard extending across the entire length of the nip and arranged to prevent the fingers of the workers from being pulled in between the rolls or between the guard and the rolls, and constructed so that the cloth can be fed into the rolls safely.

[Order 74-19, § 296-301-160, filed 5/6/74.]

WAC 296-301-165 Rotary staple cutters. A guard shall be installed completely enclosing the cutters to prevent the hands of the operator from reaching the cutting zone.

[Order 74-19, § 296-301-165, filed 5/6/74.]

WAC 296-301-170 Clothing folding machine. Cloth-folding machines shall meet the requirements of chapter 296-806 WAC, Machine safety.

[Statutory Authority: RCW 49.17.010, 49.17.040, 49.17.050, and 49.17.060. 04-14-028, § 296-301-170, filed 6/29/04, effective 1/1/05. Statutory Authority: RCW 49.17.010, [49.17].040 and [49.17].050. 99-17-094, § 296-301-170, filed 8/17/99, effective 12/1/99; Order 74-19, § 296-301-170, filed 5/6/74.]

WAC 296-301-175 Hand bailing machine. An angle-iron-handle stop guard shall be installed at the right angle to the frame of the machine. The stop guard shall be so designed and so located that it will prevent the handle from traveling beyond the vertical position should the handle slip from the operator's hand when the pawl has been released from the teeth of the takeup gear.

[Order 74-19, § 296-301-175, filed 5/6/74.]

WAC 296-301-180 Roll bench. Cleats shall be installed on the ends of roll benches.

[Order 74-19, § 296-301-180, filed 5/6/74.]

WAC 296-301-185 Cuttle or swing folder (overhead type). The bottom of the overhead folders shall be located not less than 7 feet from the floor or working surface.

[Order 74-19, § 296-301-185, filed 5/6/74.]

WAC 296-301-190 Color-mixing room. Floors in color-mixing rooms shall be constructed to drain easily.

[Order 74-19, § 296-301-190, filed 5/6/74.]

WAC 296-301-195 Open tanks and vats for mixing and storage of hot or corrosive liquids. (1) Guardrails shall be provided for open tanks and vats which conform to the requirements of WAC 296-24-750 through 296-24-75011.

(2) Shutoff valves. Boiling tanks, caustic tanks, and hot liquid containers, so located that the operator cannot see the contents from the floor or working area, shall have emergency shutoff valves controlled from a point not subject to danger of splash. Valves shall conform to the ASME Pressure Vessel Code, section VIII, Unfired Pressure Vessels, 1968.

[Statutory Authority: RCW 49.17.010, [49.17].040 and [49.17].050. 99-17-094, § 296-301-195, filed 8/17/99, effective 12/1/99; Order 74-19, § 296-301-195, filed 5/6/74.]

WAC 296-301-200 Dye kettles and vats. Pipes or drains of sufficient capacity to carry the contents safely away from the working area shall be installed where there are dye kettles and vats which may at any time contain hot or corrosive liquids. These shall not empty directly onto the floor.

[Order 74-19, § 296-301-200, filed 5/6/74.]

WAC 296-301-205 Acid carboys. Carboys shall be provided with inclinators, or the acid shall be withdrawn from the carboys by means of pumping without pressure in the carboy, or by means of hand operated siphons.

[Order 74-19, § 296-301-205, filed 5/6/74.]

WAC 296-301-210 Handling caustic soda and caustic potash. Means shall be provided for handling and emptying caustic soda and caustic potash containers to prevent workers from coming in contact with the caustic (see WAC 296-301-220).

[Order 74-19, § 296-301-210, filed 5/6/74.]

WAC 296-301-215 First aid. The first-aid provisions of the safety and health core rule book, WAC 296-800-150 apply within the scope of chapter 296-301 WAC.

[Statutory Authority: RCW 49.17.010, [49.17].040, and [49.17].050. 01-11-038, § 296-301-215, filed 5/9/01, effective 9/1/01; 00-01-038, § 296-301-215, filed 12/7/99, effective 2/1/00; Order 74-19, § 296-301-215, filed 5/6/74.]

WAC 296-301-220 Personal protective equipment. (1) Personal protective equipment. Workers engaged in handling acids or caustics in bulk, repairing pipe lines containing acids or caustics, etc., shall be provided with personal protective equipment to conform to the requirements of WAC 296-800-160.

(2) Respiratory protection. Employers must provide respiratory protection as required in chapter 296-62 WAC, Part E.

[Statutory Authority: RCW 49.17.010, [49.17].040, and [49.17].050. 01-11-038, § 296-301-220, filed 5/9/01, effective 9/1/01; 99-17-094, § 296-301-220, filed 8/17/99, effective 12/1/99; Order 74-19, § 296-301-220, filed 5/6/74.]

WAC 296-301-225 Workroom ventilation. In all workrooms in which potentially toxic substances are used, the maximum allowable concentrations listed in WAC 296-62-075 through 296-62-07515, of the general occupational health standards, shall be maintained. Open surface tanks shall conform to the requirements of WAC 296-62-11021.

[Order 74-19, § 296-301-225, filed 5/6/74.]

Chapter 296-303 WAC

SAFETY STANDARDS FOR LAUNDRY MACHINERY AND OPERATIONS

WAC

296-303-010	Laundry machinery and operations—Scope and application.
296-303-01001	General industrial safety standards.
296-303-01003	Definitions.
296-303-020	Point-of-operation guards—Scope and application.
296-303-02001	Washroom machines.
296-303-02003	Starching and drying machines.
296-303-02005	Finishing machines.
296-303-02007	Miscellaneous machines and equipment.
296-303-025	Operating rules—Scope and application.
296-303-02501	General.
296-303-02503	Mechanical.
296-303-030	Moving parts.
296-303-040	Starting and stopping devices.

WAC 296-303-010 Laundry machinery and operations—Scope and application. This chapter applies to moving parts of equipment used in laundries and to conditions peculiar to this industry, with special reference to the point of operation of laundry machines. This chapter does not apply to dry-cleaning operations.

[Order 74-18, § 296-303-010, filed 5/6/74.]

WAC 296-303-01001 General industrial safety standards. (1) General. These standards shall be augmented by the Washington state general safety and health standards, and any other regulations of general application which are or will be made applicable to all industries.

(2) Additional requirements. The employer shall comply with the provisions of the standards referenced in this section. In the event of any conflict between this section and WAC 296-303-015 through 296-303-040, the requirements of WAC 296-303-015 through 296-303-040 shall apply. The provisions of this chapter shall prevail in the event of conflict with, or duplication of, provisions contained in chapters 296-24, 296-62, and 296-800 WAC.

(a) Industrial lighting. American National Standard Practice for Industrial Lighting, ANSI A11.1-1965 (R-1970).

(b) Floor and wall openings, railings, and toeboards. American National Standard Safety Requirements for Floor and Wall Openings, Railings, and Toeboards, ANSI A13.1-1956.

(c) Identification of piping systems. American National Standard Safety Standard for Mechanical Power Transmission Apparatus, ANSI A13.1-1956.

(d) Mechanical power transmission apparatus. American National Standard Safety Standard for Mechanical Power Transmission Apparatus, ANSI B15.1-1971.

(e) Pressure piping—Power piping. American National Standard Code for Pressure Piping—Power Piping, ANSI B31.1.0-1967. Addenda to the American National Standard Code for Pressure Piping—Power Piping, ANSI B31.1.0a-1969.

(f) Sanitation. American National Standard Requirements for Sanitation in Places of Employment, ANSI Z4.1-1968.

(g) Local exhaust systems. American National Standard Fundamentals Governing the Design and Operation of Local Exhaust Systems, ANSI Z9.2-1960.

(h) Gas appliances and gas piping. American National Standard for the Installation of Gas Appliances and Gas Piping, ANSI Z21.30-1964.

(3) WAC 296-24-012 and 296-800-360 shall apply where applicable to this industry.

[Statutory Authority: RCW 49.17.010, [49.17].040, and [49.17].050. 01-11-038, § 296-303-01001, filed 5/9/01, effective 9/1/01; Order 74-18, § 296-303-01001, filed 5/6/74.]

WAC 296-303-01003 Definitions. (1) "Laundry" means an establishment wherein the washing, ironing, or other finishing of clothes, or any other textiles is done, but excluding printing, bleaching, dry cleaning, or dyeing of clothes or other textiles.

(2) "Marking machine" means a power-driven machine used for marking clothes or other textiles.

(3) "Washing machine" means a power-driven machine used for washing clothes or other textiles. It generally consists of a stationary case or shell inside of which is a revolving perforated cylinder.

(4) "Extractor" means a power-driven centrifugal machine used for removing surplus moisture from clothes or other textiles by centrifugal action.

(5) "Wringer" means one or more power-driven rolls used for removing surplus moisture from clothes or other textiles.

(6) "Starch mixer" means a power-driven machine used for mixing or processing starch.

(7) "Starching machine" means a power-driven machine used for the starching of clothes or other textiles.

(8) "Drying tumbler" means a machine within which clothes or other textiles are dried by air, and which usually consists of an enclosure inside of which is a revolving cylinder.

(9) "Shaker" (clothes tumbler) means a revolving cylinder used for shaking out clothes or other textiles.

(10) "Drying room" means an enclosure used for drying clothes or other textiles, and containing any power-driven mechanism.

(11) "Dampening machine" means a machine used for dampening clothes or other textiles.

(12) "Ironer" means a hand- or power-operated machine, with one or more rolls or heated surfaces in contact, used for ironing or smoothing clothes or other textiles.

(13) "Shaping machine" means a power-driven machine used to shape, mold, or otherwise finish clothes or other textiles; this term shall also include shaping tables, stands, or shelves upon which the machine may be mounted.

(14) "Sewing machine" means a machine used for sewing or stitching clothes or other textiles.

(15) "Guarded" means covered, shielded, fenced, enclosed, or otherwise protected by means of suitable covers or casings, barrier rails, safety bars, or screens, to eliminate the possibility of accidental contact with, or dangerous approach by, persons or objects.

(16) "Enclosed" means that the object or equipment or part thereof is so guarded that accidental contact at the point of danger, during the regular operation of the equipment, is not possible.

(17) "Safety interlock" means a device that will prevent the operation of the machine while the cover or door is open or unlocked and will hold the cover or door closed and locked while the basket or cylinder is in motion.

(18) "Moving parts" means gears, sprockets, revolving shafts, clutches, belts, pulleys, or other revolving or reciprocating parts that are attached to, or form an integral part of, a machine.

(19) "Power transmission" pertains to equipment such as shafting, gears, belts, pulleys, or other parts used for transmitting power to the machine, and shall include prime movers.

(20) "Prime movers" includes steam, gas, oil, and air engines or motors, and steam and hydraulic turbines.

(21) "Point of operation" means the point or points at which clothes or other textiles are inserted or manipulated in the operation of the machine.

[Order 74-18, § 296-303-01003, filed 5/6/74.]

WAC 296-303-020 Point-of-operation guards—Scope and application. All sections of this chapter which include WAC 296-303-020 in the section number apply to point-of-operation guards.

[Order 74-18, § 296-303-020, filed 5/6/74.]

WAC 296-303-02001 Washroom machines. (1) Marking machine. Each power marking machine shall be equipped with a spring-compression device of such design as to prevent injury to fingers, should they be caught between the marking plunger and platen; or the marking machine shall be equipped with a control mechanism that will require the simultaneous action of both hands to operate the machine; or there shall be a guard that will act as a barrier in front of, and which will prevent the operator's fingers from coming into contact with the marking plunger.

(2) Washing machine.

(a) Each washing machine shall be equipped with an interlocking device that will prevent the inside cylinder from moving under power when the outer door on the case or shell is open, and will also prevent the door from being opened while the inside cylinder is in motion. This device should not prevent the movement of the inner cylinder under the action of a hand-operated mechanism or under the operation of an "inching device."

(b) Each washing machine shall be provided with means for holding open the doors or covers of inner and outer cylinders or shells while being loaded or unloaded. Spring loaded devices are an acceptable means.

(3) Extractor.

(a) Each extractor shall be equipped with a metal cover.

(b) Each extractor shall be equipped with an interlocking device that will prevent the cover from being opened while the basket is in motion, and will also prevent the power operation of the basket while the cover is not fully closed and secured. This device should not prevent the movement of the basket by hand to ensure an even loading.

(c) Each extractor shall also be effectively secured in position on the floor or foundation so as to eliminate unnecessary vibrations, and shall not be operated at a speed greater than that given in the manufacturer's rating, which shall be stamped on the inside of the basket where it is easily visible, in letters not less than one-fourth inch in height. The maxi-

mum permissible speed shall be given in revolutions per minute.

(d) Each engine individually driving an extractor shall be provided with an engine stop approved as specified in WAC 296-24-006, of the general safety and health standards, and a speed-limit governor. It is suggested that where an extractor is driven by a direct-current motor a "no field" release be installed to prevent overspeed, which may result from an open or broken field.

(4) Power wringer. Each power wringer shall be equipped with a safety bar or other guard across the entire front of the feed or first pressure rolls, so arranged that the striking of the bar or guard by the hand of the operator or other person will stop the machine.

[Order 74-18, § 296-303-02001, filed 5/6/74.]

WAC 296-303-02003 Starching and drying machines. (1) Starching machine (cylinder or box type). Each starching machine, cylinder or box type, shall be enclosed or guarded so as to prevent the operator or other person from coming into accidental contact with the cylinder or box while the machine is in motion.

(2) Drying-room fan. Each drying-room fan, any part of which is within 7 feet of the floor or working platform, shall be guarded with wire mesh or screen of not less than No. 16 gauge, the openings of which will reject a ball one-half inch in diameter.

(3) Drying tumbler.

(a) Each drying tumbler shall be equipped with an interlocking device that will prevent the inside cylinder from moving under power when the outer door on the case or shell is open, and also prevent the door from being opened while the inside cylinder is in motion. This device should not prevent the movement of the inner cylinder under the action of a hand-operated mechanism or under the operation of an inching device.

(b) Each drying tumbler shall be provided with means for holding open the doors or covers of inner and outer cylinders or shells while being loaded or unloaded.

(4) Shaker (clothes tumbler).

(a) Each shaker or clothes tumbler of the single-cylinder type shall be equipped with a device that will automatically prevent the tumbler from moving while the door is open.

(b) The tumbler shall also be enclosed or guarded so as to prevent accidental contact by the operator or other person while the machine is in motion.

(c) Each shaker or clothes tumbler of the double-cylinder type shall be equipped with an interlocking device that will prevent the inside cylinder from moving when the outer door on the case or shell is open and will also prevent the door from being opened while the inside cylinder is in motion. This device should not prevent the movement of the inner cylinder under the action of a hand-operated mechanism or under the operation of an inching device.

(d) Each shaker or clothes tumbler of the double-cylinder type shall be provided with means for holding open the doors or covers of inner and outer cylinders or shells while being loaded or unloaded.

(5) Exception. Provisions of (3), (4)(a), (c) and (d) of this section shall not apply to shakeout or conditioning tumblers where the clothes are loaded into the open end of the revolving cylinder and are automatically discharged out of the opposite end.

[Order 74-18, § 296-303-02003, filed 5/6/74.]

WAC 296-303-02005 Finishing machines. (1) Dampening machine. Each roll-dampening machine shall be so equipped that the rolls will be entirely enclosed and so arranged as to prevent the fingers of the operator or other person from being caught between the rolls. This may be accomplished by:

(a) A slot or hopper;

(b) A rod or strip located directly in front of the feed and extending the full length of the rolls.

(2) Ironer.

(a) Each flat-work or collar ironer shall be equipped with a safety bar or other guard across the entire front of the feed or first pressure rolls, so arranged that the striking of the bar or guard by the hand of the operator or other person will stop the machine. The pressure rolls shall be covered or guarded so that the operator or other person cannot reach into the rolls without removing the guard. This may be either a vertical guard on all sides or a complete cover. If a vertical guard is used, the distance from the floor or working platform to the top of guard shall be not less than six feet.

(b) Each body-type ironer, roll or shoe type, including sleeve and band ironers, shall be equipped with a safety bar or other guard across the entire length of the feed roll or shoe, so arranged that the striking of the bar or guard by the hand of the operator or other person will stop the machine. The hot roll or shoe shall also be covered in such a way that the operator or other person cannot come into contact with the heated surfaces.

(c) Each combined rotary-bosom and coat ironer shall be equipped with a safety bar or other guard across the entire length of the feed roll or shoe, so arranged that the striking of the bar or guard by the hand of the operator or other person will stop the machine. The hot roll or shoe shall also be covered in such a way that the operator or other person cannot come into contact with the heated surfaces.

(d) Each ironing press (excluding hand or foot powered ones) shall be equipped with a guard or means that will prevent the fingers of the operator or other person from being caught between the ironing surfaces.

[Order 74-18, § 296-303-02005, filed 5/6/74.]

WAC 296-303-02007 Miscellaneous machines and equipment. (1) Sewing machine. Each sewing machine shall be equipped with a guard permanently attached to the machine, so that the operator's fingers cannot pass under the needle. It shall be of such form that the needle can be conveniently threaded without removing the guard. This requirement will not apply to domestic-type sewing machines having a presser-foot which is in the "down" position during operation of the machine.

(2) Exhaust or ventilating fans. Each exhaust or ventilating fan within seven feet of the floor or working platform shall be completely covered with wire mesh of not less than No. 16 gauge, and with openings that will reject a ball one-half inch in diameter.

(3) Steam pipes.

(a) All steam pipes that are within seven feet of the floor or working platform, and with which the worker may come into contact, shall be insulated or covered with a heat-resistive material or shall be guarded to prevent direct contact with the worker.

(b) Where pressure-reducing valves are used, one or more relief or safety valves shall be provided on the low-pressure side of the reducing valve, in case the piping or equipment on the low-pressure side does not meet the requirements for full initial pressure. The relief or safety valve shall be located adjacent to, or as close as possible to, the reducing valve. Relief and safety valves vented to the atmosphere shall be so constructed as to prevent injury or damage caused by fluid escaping from relief or safety valves. The vents shall be of ample size and as short and direct as possible. The combined discharge capacity of the relief valves shall be such that the pressure rating of the lower-pressure piping and equipment will not be exceeded if the reducing valve sticks or fails to open.

[Statutory Authority: Chapter 49.17 RCW. 89-11-035 (Order 89-03), § 296-303-02007, filed 5/15/89, effective 6/30/89; Order 74-18, § 296-303-02007, filed 5/6/74.]

WAC 296-303-025 Operating rules—Scope and application. All sections of this chapter which include WAC 296-303-025 in the section number apply to operating rules.

[Order 74-18, § 296-303-025, filed 5/6/74.]

WAC 296-303-02501 General. (1) Floors.

(a) The floors of every room in a laundry that are used for washing purposes shall be properly constructed of cement, tile, or similar material. The floors shall be watertight, free from projections, crevices, or dangerous gradients. They shall be maintained in good repair and so drained that no water may accumulate.

(b) The floors of every room except washrooms shall be constructed of hardwood or any impervious material, free from protruding nails, splinters, or loose boards, and shall be so maintained.

(2) Table tops, shelves, and machine woodwork. Table tops, shelves, and machine woodwork shall be constructed of materials properly surfaced, finished free from splinters, and so maintained.

(3) Markers. Markers and others handling soiled clothes shall be warned against touching the eyes, mouth, or any part of the body on which the skin has been broken by a scratch or abrasion; and they shall be cautioned not to touch or eat food until their hands have been thoroughly washed.

(4) Ventilation. Where artificial ventilation is necessary to the maintenance of comfortable working conditions, an adequate ventilating system shall be installed as specified in WAC 296-62-110 of the general occupational health standards.

(5) Instruction of employees. Employees shall be properly instructed as to the hazards of their work and be instructed in safe practices, by bulletins, printed rules, and verbal instructions.

[Order 74-18, § 296-303-02501, filed 5/6/74.]

WAC 296-303-02503 Mechanical. (1) Safety guards.

(a) No safeguard, safety appliance, or device attached to, or forming an integral part of any machinery shall be removed or made ineffective except for the purpose of making immediate repairs or adjustments. Any such safeguard, safety appliance, or device removed or made ineffective during the repair or adjustment of such machinery shall be replaced immediately upon the completion of such repairs or adjustments.

(b) No machine shall be operated until such repairs and adjustments have been made and the machine is in good working condition.

(2) Steam-pressure apparatus. Steam machines shall not be operated at a pressure above that given by the manufacturer's pressure rating as shown on name plate. If the steam source is at a pressure higher than that given by the manufacturer's rating, a stop valve, reducing valve, pressure gauge, and safety valve shall be installed, in the order named, from the source. The safety valve shall be located in a nonhazardous place.

(3) Machine adjustments. No moving parts of any machine shall be oiled, cleaned, adjusted, or repaired while said machine is in operation or in motion except that the rolls of adjusting machines not equipped with hand-power means shall be operated at the slowest speed possible with an operator constantly at the starting mechanism.

(4) Extractors. Each extractor shall be dismantled and inspected at least once a year and, if necessary, repaired. Overdriven extractors, if provided with handholes through which basket and rings can be inspected, need not be dismantled.

[Order 74-18, § 296-303-02503, filed 5/6/74.]

WAC 296-303-030 Moving parts. (1) Machine guarding (other than point of operation). Moving parts of machines, such as gears, sprockets, belts, pulleys, and shafts, shall be guarded in accordance with the requirements of chapter 296-806 WAC, Machine safety.

(2) Prime-mover guarding. Moving parts of prime movers such as fly-wheels, cranks and connecting rods, tail rods or extension piston rods, and governor balls, shall be guarded in accordance with the requirements of chapter 296-806 WAC, Machine safety.

[Statutory Authority: RCW 49.17.010, 49.17.040, 49.17.050, and 49.17.060. 04-14-028, § 296-303-030, filed 6/29/04, effective 1/1/05; Order 74-18, § 296-303-030, filed 5/6/74.]

WAC 296-303-040 Starting and stopping devices. (1) Each power-driven machine shall be provided with means for disconnecting from the source of power. Starting and stopping devices for machines shall be so located as to be operable from the front of the machine, and so constructed as to allow proper guarding of belts and pulleys.

(2) Doors of washing machines, extractors, and tumbler/shaker dryer machines, shall have a cut-off micro switch or other method to shut off power when loading doors are opened, making inner cylinder, tumbler, or shaker mechanisms inoperative while the door is open. In those situations where the cylinder or mechanism continues to rotate/move, and present a hazard after the power is off, an interlocking

device, breaking switch, or a time-delay switch is additionally required to prevent injury.

[Statutory Authority: Chapter 49.17 RCW. 89-11-035 (Order 89-03), § 296-303-040, filed 5/15/89, effective 6/30/89; Order 74-18, § 296-303-040, filed 5/6/74.]

Chapter 296-304 WAC

SAFETY STANDARDS FOR SHIP REPAIRING, SHIPBUILDING AND SHIPBREAKING

WAC

296-304-010 Scope and application.
296-304-01001 Definitions.
296-304-01003 Reference specifications, standards, and codes.
296-304-01005 Competent person.
296-304-020 Confined and enclosed spaces and other dangerous atmospheres in shipyard employment.
296-304-02001 Reserved.
296-304-02003 Precautions and the order of testing before entering confined and enclosed spaces and other dangerous atmospheres.
296-304-02005 Cleaning and other cold work.
296-304-02007 Hot work.
296-304-02009 Maintenance of safe conditions.
296-304-02011 Warning signs and labels.
296-304-02013 Appendix A—Compliance assistance guidelines for confined and enclosed spaces and other dangerous atmospheres.
296-304-02015 Appendix B—Confined and enclosed spaces and other dangerous atmospheres in shipyard employment.
296-304-030 Surface preparation and preservation—Scope and application.
296-304-03001 Toxic cleaning solvents.
296-304-03003 Chemical paint and preservative removers.
296-304-03005 Mechanical paint removers.
296-304-03007 Painting.
296-304-03009 Flammable liquids.
296-304-040 Welding, cutting and heating—Scope and application.
296-304-04001 Ventilation and protection in welding, cutting and heating.
296-304-04003 Fire prevention.
296-304-04005 Welding, cutting and heating in way of preservative coatings.
296-304-04007 Welding, cutting and heating of hollow metal containers and structures not covered by WAC 296-304-02003.
296-304-04009 Gas welding and cutting.
296-304-04011 Arc welding and cutting.
296-304-04013 Uses of fissionable material in ship-breaking, shipbuilding and ship repairing.
296-304-050 Scaffolds, ladders and other working surfaces—Scope and application.
296-304-05001 Scaffolds or staging.
296-304-05003 Ladders.
296-304-05005 Guarding of deck openings and edges.
296-304-05007 Access to vessels.
296-304-05009 Access to and guarding of dry docks and marine railways.
296-304-05011 Access to cargo spaces and confined spaces.
296-304-05013 Working surfaces.
296-304-060 General working conditions—Scope and application.
296-304-06001 Housekeeping.
296-304-06003 Illumination.
296-304-06005 Utilities.
296-304-06007 Work in confined or isolated spaces.
296-304-06009 Work on or in the vicinity of radar and radio.
296-304-06011 Work in or on lifeboats.
296-304-06013 Health and sanitation.
296-304-06015 First aid.
296-304-070 Gear and equipment for rigging and materials handling—Scope and application.
296-304-07001 Inspection.
296-304-07003 Ropes, chains and slings.
296-304-07005 Shackles and hooks.
296-304-07007 Chain falls and pull-lifts.
296-304-07009 Hoisting and hauling equipment.
296-304-07011 Use of gear.
296-304-07013 Qualifications of operators.
296-304-080 Tools and related equipment—Scope and application.
296-304-08001 General precautions.
296-304-08003 Portable electric tools.
296-304-08005 Hand tools.
296-304-08007 Abrasive wheels.
296-304-08009 Powder-actuated fastening tools.
296-304-08011 Internal combustion engines, other than ship's equipment.
296-304-090 Personal protective equipment (PPE)—General requirements.
296-304-09001 Hazard assessment and equipment selection.
296-304-09003 Training.
296-304-09005 Eye and face protection.
296-304-09007 Respiratory protection.
296-304-09009 Hearing protection.
296-304-09011 Head protection.
296-304-09013 Foot protection.
296-304-09015 Hand and body protection.
296-304-09017 Lifesaving equipment.
296-304-09019 Fall protection—General requirement.
296-304-09021 Personal fall arrest systems (PFAS).
296-304-09023 Positioning device systems.
296-304-100 Ship's machinery and piping systems—Scope and application.
296-304-10001 Ship's boilers.
296-304-10003 Ship's piping systems.
296-304-10005 Ship's propulsion machinery.
296-304-10007 Ship's deck machinery.
296-304-110 Portable, unfired pressure vessels, drums and containers, other than ship's equipment—Scope and application.
296-304-11001 Portable air receivers and other unfired pressure vessels.
296-304-11003 Drums and containers.
296-304-120 Electrical machinery—Electrical circuits and distribution boards.
296-304-130 Gear certification—General provisions.
296-304-13001 Purpose and scope.
296-304-13003 Definitions of terms.
296-304-140 Procedure governing accreditation—Scope and application.
296-304-14001 Application for accreditation.
296-304-14003 Action upon application.
296-304-14005 Duration and renewal of accreditation.
296-304-14007 Criteria governing accreditation to certificate vessels' cargo gear.
296-304-14009 Voluntary amendment or termination of accreditation.
296-304-14011 Suspension or revocation of accreditation.
296-304-14013 Reconsideration and review.
296-304-150 Duties of persons accredited to certificate vessels' cargo gear—Scope and application.
296-304-15001 General duties—Exemptions.
296-304-15003 Recordkeeping and related procedures concerning records in custody of accredited persons.
296-304-15005 Recordkeeping and related procedures concerning records in custody of the vessel.
296-304-160 Certification of vessels' cargo gear—Scope and application.
296-304-16001 General.
296-304-16003 Initial tests of cargo gear and tests after alterations, renewals or repairs.
296-304-16005 Periodic tests, examinations and inspections.
296-304-16007 Heat treatment.
296-304-16009 Exemptions from heat treatment.
296-304-16011 Grace periods.
296-304-16013 Gear requiring welding.
296-304-16015 Damaged components.
296-304-16017 Marking and posting of safe working loads.
296-304-16019 Requirements governing braking devices and power sources.
296-304-16021 Means of derrick attachment.
296-304-16023 Limitations on use of wire rope.
296-304-16025 Limitations on use of chains.
296-304-170 Certification of vessels—Tests and proof loads—Heat treatment—Competent persons—Scope and application.
296-304-17001 Visual inspection before tests.
296-304-17003 Unit proof test—Winches, derricks and gear accessory thereto.
296-304-17005 Unit proof tests—Cranes and gear accessory thereto.
296-304-17007 Limitations on safe working loads and proof loads.
296-304-17009 Examinations subsequent to unit tests.
296-304-17011 Proof tests—Loose gear.
296-304-17013 Specially designed blocks and components.
296-304-17015 Proof tests—Wire rope.
296-304-17017 Proof tests after repairs or alterations.
296-304-17019 Order of tests.

296-304-17021	Heat treatment.
296-304-17023	Competent persons.
296-304-180	Accreditation to certificate shore-based equipment—Scope and application.
296-304-18001	Eligibility for accreditation to certificate shore-based material handling devices covered by chapter 296-56 WAC of the safety and health regulations for longshoring.
296-304-18003	Provisions respecting application for accreditation, action upon the application, and related matters.
296-304-190	Duties of persons accredited to certificate shore-based material handling devices—General duties, exemptions.
296-304-200	Certification of shore-based material handling devices—Scope and application.
296-304-20001	General provisions.
296-304-20003	Unit proof test and examination of cranes.
296-304-20005	Annual examination of cranes.
296-304-20007	Unit proof test and examination of derricks.
296-304-20009	Annual examination of derricks.
296-304-20011	Determination of crane or derrick safe working loads and limitations in absence of manufacturer's data.
296-304-20013	Safe working load reduction.
296-304-20015	Safe working load increase.
296-304-20017	Nondestructive examination.
296-304-20019	Wire rope.
296-304-20021	Heat treatment.
296-304-20023	Examination of bulk cargo loading or discharging spouts or suckers.
296-304-20025	Documentation.

WAC 296-304-010 Scope and application. (1) The provisions and standards of the general safety and health standards, chapters 296-24, 296-62 and 296-800 WAC, and such other codes and standards as are promulgated by the department of labor and industries which are applicable to all industries, shall be applicable in the ship repairing, shipbuilding, or shipbreaking industries whenever the employees are covered under the Washington State Industrial Safety and Health Act, chapter 49.17 RCW. The rules of this chapter and the rules of the aforementioned chapters 296-24, 296-62, and 296-800 WAC are applicable to all ship repairing, shipbuilding, and shipbreaking industries and operations, provided that such rules shall not be applicable to those operations under the exclusive safety jurisdiction of the federal government.

(2) The responsibility for compliance with these regulations is placed upon "employers" as defined in WAC 296-304-01001.

(3) It is not the intent of these regulations to place additional responsibilities or duties on owners, operators, agents or masters of vessels unless such persons are acting as employers, nor is it the intent of these regulations to relieve such owners, operators, agents or masters of vessels from responsibilities or duties now placed upon them by law, regulation or custom.

(4) The responsibilities placed upon the competent person herein shall be deemed to be the responsibilities of the employer.

[Statutory Authority: RCW 49.17.010, [49.17].040, and [49.17].050. 01-11-038, § 296-304-010, filed 5/9/01, effective 9/1/01. Statutory Authority: RCW 49.17.040, [49.17].050 and [49.17].060. 98-02-006, § 296-304-010, filed 12/26/97, effective 3/1/98. Statutory Authority: RCW 49.17.010, [49.17].050 and [49.17].060. 95-22-015, § 296-304-010, filed 10/20/95, effective 1/16/96. Statutory Authority: Chapter 49.17 RCW. 95-04-006, § 296-304-010, filed 1/18/95, effective 3/10/95; 89-11-035 (Order 89-03), § 296-304-010, filed 5/15/89, effective 6/30/89; Order 75-6, § 296-304-010, filed 3/10/75; Order 74-25, § 296-304-010, filed 5/7/74.]

WAC 296-304-01001 Definitions. "Anchorage" - A secure point to attach lifelines, lanyards, or deceleration devices.

"Body belt" - A strap with means to both secure it around the waist and to attach it to a lanyard, lifeline, or deceleration device. Body belts may be used only in fall restraint or positioning device systems and may not be used for fall arrest. Body belts must be at least one and five-eighths inches (4.13 cm) wide.

"Body harness" - Straps to secure around an employee so that fall arrest forces are distributed over at least the thighs, shoulders, chest and pelvis with means to attach it to other components of a personal fall arrest system.

"Cold-work" - Work that does not involve riveting, welding, burning, or other fire-producing or spark-producing operations.

"Competent person" - A person who can recognize and evaluate employee exposure to hazardous substances or to other unsafe conditions and can specify the necessary protection and precautions necessary to ensure the safety of employees as required by these standards.

"Confined space" - A small compartment with limited access such as a double bottom tank, cofferdam, or other small, confined space that can readily create or aggravate a hazardous exposure.

"Connector" - A device used to connect parts of a personal fall arrest system or parts of a positioning device system together. It may be:

• An independent component of the system (such as a carabiner); or

• An integral component of part of the system (such as a buckle or D-ring sewn into a body belt or body harness or a snaphook spliced or sewn to a lanyard or self-retracting lanyard).

"Deceleration device" - A mechanism, such as a rope grab, rip stitch lanyard, specially woven lanyard, tearing or deforming lanyard, or automatic self-retracting lifeline/lanyard, that serves to dissipate a substantial amount of energy during a fall arrest, or to limit the energy imposed on an employee during fall arrest.

"Deceleration distance" - The additional vertical distance a falling employee travels, excluding lifeline elongation and free fall distance, before stopping, from the point at which the deceleration device begins to operate. It is measured from the location of an employee's body belt or body harness attachment point at the moment of activation (at the onset of fall arrest forces) of the deceleration device during a fall, to the location of that attachment point after the employee comes to a full stop.

"Director" - The director of the department of labor and industries or a designated representative.

"Employee" - Any person engaged in ship repairing, ship building, or ship breaking or related employment as defined in these standards.

"Employer" - An employer with employees who are employed, in whole or in part, in ship repair, ship building and ship breaking, or related employment as defined in these standards.

"Enclosed space" - A space, other than a confined space, that is enclosed by bulkheads and overhead. It includes

cargo holds, tanks, quarters, and machinery and boiler spaces.

"Equivalent" - Alternative designs, materials, or methods to protect against a hazard which the employer can demonstrate will provide an equal or greater degree of safety for employees than the method or item specified in the standard.

"Free fall" - To fall before a personal fall arrest system begins to apply force to arrest the fall.

"Free fall distance" - The vertical displacement of the fall arrest attachment point on the employee's body harness between onset of the fall and just before the system begins to apply force to arrest the fall. This distance excludes deceleration distance, and lifeline/lanyard elongation, but includes any deceleration device slide distance or self-retracting lifeline/lanyard extension before the device operates and fall arrest forces occur.

"Gangway" - A ramp-like or stair-like means to board or leave a vessel including accommodation ladders, gangplanks and brows.

"Hazardous substance" - A substance likely to cause injury because it is explosive, flammable, poisonous, corrosive, oxidizing, irritant, or otherwise harmful.

"Hot-work" - Riveting, welding, burning or other fire or spark producing operations.

"Lanyard" - A flexible line of rope, wire rope, or strap which generally has a connector at each end for connecting the body belt or body harness to a deceleration device, lifeline, or anchorage.

"Lifeline" - A component consisting of a flexible line to connect to an anchorage at one end to hang vertically (vertical lifeline), or to connect to anchorages at both ends to stretch horizontally (horizontal lifeline), and which serves as a means for connecting other components of a personal fall arrest system to the anchorage.

"Lower levels" - Those areas or surfaces to which an employee can fall. Such areas or surfaces include but are not limited to ground levels, floors, ramps, tanks, materials, water, excavations, pits, vessels, structures, or portions thereof.

"Personal fall arrest system" - A system used to arrest an employee in a fall from a working level. It consists of an anchorage, connectors, body harness and may include a lanyard, a deceleration device, a lifeline, or a suitable combination.

"Portable unfired pressure vessel" - A pressure container or vessel used aboard ship, other than the ship's equipment, containing liquids or gases under pressure. This does not include pressure vessels built to Department of Transportation regulations under 49 CFR Part 78, Subparts C and H.

"Positioning device system" - A body belt or body harness system rigged to allow an employee to be supported at an elevated vertical surface, such as a wall or window, and to be able to work with both hands free while leaning.

"Powder actuated fastening tool" - A tool or machine that drives a stud, pin, or fastener by means of an explosive charge.

"Qualified person" - A person who has successfully demonstrated the ability to solve or resolve problems related to the subject matter and work by possessing a recognized degree or certificate of professional standing or by extensive knowledge, training, and experience.

"Related employment" - Any employment related to or performed in conjunction with ship repairing, ship building or ship breaking work, including, but not limited to, inspecting, testing, and serving as a watchman.

"Restraint (tether) line" - A line from an anchorage, or between anchorages, to which the employee is secured so as to prevent the employee from walking or falling off an elevated work surface.

Note: A restraint line is not necessarily designed to withstand forces resulting from a fall.

"Rope grab" - A deceleration device that travels on a lifeline and automatically, by friction, engages the lifeline and locks to arrest the fall of an employee. A rope grab usually uses the principle of inertial locking, cam/level locking or both.

"Shall" or **"must" -** Mandatory.

"Ship breaking" - Breaking down a vessel's structure to scrap the vessel, including the removal of gear, equipment or any component part of a vessel.

"Ship building" - Construction of a vessel, including the installation of machinery and equipment.

"Ship repairing" - Repair of a vessel including, but not limited to, alterations, conversions, installations, cleaning, painting, and maintenance.

"Vessel" - Every watercraft for use as a means of transportation on water, including special purpose floating structures not primarily designed for or used as a means of transportation on water.

[Statutory Authority: RCW 49.17.010, 49.17.040, 49.17.050, and 49.17.060. 03-04-099, § 296-304-01001, filed 2/4/03, effective 8/1/03. Statutory Authority: RCW 49.17.040, [49.17].050 and [49.17].060. 98-02-006, § 296-304-01001, filed 12/26/97, effective 3/1/98. Statutory Authority: Chapter 49.17 RCW. 95-04-006, § 296-304-01001, filed 1/18/95, effective 3/10/95; Order 76-7, § 296-304-01001, filed 3/1/76; Order 74-25, § 296-304-01001, filed 5/7/74.]

WAC 296-304-01003 Reference specifications, standards, and codes. Specifications, standards, and codes of agencies of the U.S. government, to the extent specified in the text, form a part of these regulations. In addition, the specifications, standards, and codes of organizations which are not agencies of the U.S. government, in effect on the date of the promulgation of these regulations as listed below, to the extent specified in the text, form a part of these standards:

National Fire Protection Association, 60 Batterymarch Street, Boston, Mass.02110,

Underwriters' Laboratories, Inc., 207 East Ohio Street, Chicago, Ill.60611,

United States of America Standard Safety Code for Portable Wood Ladders, A14.1-1975, United States of America Standards Institute, Inc., 10 East 40th Street, New York, N.Y. 10016,

United States of America Standard Safety Code for Portable Metal Ladders, A14.2-1972, United States of America Standards Institute, Inc., 10 East 40th Street, New York, N.Y. 10016,

United States of America Standard Safety Code for Head, Eye, and Respiratory Protection, Z2.1-1959, United States of America Standards Institute, Inc., 10 East 40th Street, New York, N.Y. 10016,

American Society of Mechanical Engineers, Boiler and Pressure Vessel Code, Section VIII, Rules for Construction of Unfired Pressure Vessels, American Society of Mechanical Engineers, 345 East 47th Street, New York, N.Y. 10017,

Threshold Limit Values, American Conference of Governmental Industrial Hygienists, 1014 Broadway, Cincinnati, Ohio 45202,

United States of America Standards Safety Code for the Use, Care, and Protection of Abrasive Wheels, B7.1-1964, United States of America Standards Institute, Inc., 10 East 40th Street, New York, N.Y. 10016.

[Statutory Authority: RCW 49.17.010, 49.17.040, 49.17.050, and 49.17.060. 03-04-099, § 296-304-01003, filed 2/4/03, effective 8/1/03; Order 74-25, § 296-304-01003, filed 5/7/74.]

WAC 296-304-01005 Competent person. (1) Application. This section applies to shipyard employment.

(2) Designation.

(a) One or more competent persons shall be designated by the employer in accordance with the applicable requirements of this section, unless the requirements of WAC 296-304-020 through 296-304-02011, WAC 296-304-030 through 296-304-03009, WAC 296-304-040 through 296-304-04013, and WAC 296-304-080 through 296-304-08011, are always carried out by a marine chemist.

Exception: The employer may designate any person who meets the applicable portions of the criteria set forth in subsection (3) of this section as a competent person who is limited to performing testing to the following situations:

(i) Repair work on small craft in boat yards where only combustible gas indicator tests are required for fuel tank leaks or when using flammable paints below decks;

(ii) Building of wooden vessels where only knowledge of the precautions to be taken when using flammable paints is required;

(iii) The breaking of vessels where there is no fuel oil or other flammable hazard; and

(iv) Tests and inspections performed to comply with WAC 296-304-03007 (2)(h) and 296-304-03009 (1)(e).

(b) The employer shall maintain either a roster of designated competent persons or a statement that a marine chemist will perform the tests or inspections which require a competent person.

(c) The employer shall make the roster of designated persons or the statement available to employees, the employee's representative, or the director upon request.

(d) The roster shall contain, as a minimum, the following:

(i) The employer's name;

(ii) The designated competent person's name(s); and

(iii) The date the employee was trained as a competent person.

(3) Criteria. The employer shall ensure that each designated competent person has the following skills and knowledge:

(a) Ability to understand and carry out written or oral information or instructions left by marine chemist, Coast Guard authorized persons and certified industrial hygienists;

(b) Knowledge of WAC 296-304-020 through 296-304-02011, WAC 296-304-030 through 296-304-03009, WAC 296-304-040 through 296-304-04013, and WAC 296-304-080 through 296-304-08011;

(c) Knowledge of the structure, location, and designation of spaces where work is done;

(d) Ability to calibrate and use testing equipment including but not limited to, oxygen indicators, combustible gas indicators, carbon monoxide indicators, and carbon dioxide indicators, and to interpret accurately the test results of that equipment;

(e) Ability to perform all required tests and inspections which are or may be performed by a competent person as set forth in WAC 296-304-020 through 296-304-02011, WAC 296-304-030 through 296-304-03009, WAC 296-304-040 through 296-304-04013, and WAC 296-304-080 through 296-304-08011;

(f) Ability to inspect, test, and evaluate spaces to determine the need for further testing by a marine chemist or a certified industrial hygienist; and

(g) Ability to maintain records required by this section.

(4) Recordkeeping.

(a) When tests and inspections are performed by a competent person, marine chemist, or certified industrial hygienist as required by any provisions of WAC 296-304-020 through 296-304-02011, WAC 296-304-030 through 296-304-03009, WAC 296-304-040 through 296-304-04013, or WAC 296-304-080 through 296-304-08011, the employer shall ensure that the person performing the test and inspection records the location, time, date, location of inspected spaces, and the operations performed, as well as the test results and any instructions.

(b) The employer shall ensure that the records are posted in the immediate vicinity of the affected operations while work in the spaces is in progress. The records shall be kept on file for a period of at least three months from the completion date of the specific job for which they were generated.

(c) The employer shall ensure that the records are available for inspection by the director, and employees and their representatives.

[Statutory Authority: Chapter 49.17 RCW. 95-04-006, § 296-304-01005, filed 1/18/95, effective 3/10/95.]

WAC 296-304-020 Confined and enclosed spaces and other dangerous atmospheres in shipyard employment. Scope, application and definitions applicable to this subsection:

(1) Scope and application. This section applies to work in confined and enclosed spaces and other dangerous atmospheres in shipyard employment, including vessels, vessel sections, and on land-side operations regardless of geographic location.

(2) Definitions applicable to this section:

Adjacent spaces means those spaces bordering a subject space in all directions, including all points of contact, corners, diagonals, decks, tank tops, and bulkheads.

Certified industrial hygienist (CIH) means an industrial hygienist who is certified by the American Board of Industrial Hygiene.

Coast Guard authorized person means an individual who meets the requirement of WAC 296-304-02015, Appendix B, for tank vessels, for passenger vessels, and for cargo and miscellaneous vessels.

Dangerous atmosphere means an atmosphere that may expose employees to the risk of death, incapacitation, impairment of ability to self-rescue (i.e., escape unaided from a confined or enclosed space), injury, or acute illness.

Director means the director of the department of labor and industries or his/her designated representative.

Enter with restrictions denotes a space where entry for work is permitted only if engineering controls, personal protective equipment, clothing, and time limitations are as specified by the marine chemist, certified industrial hygienist, or the shipyard competent person.

Entry means the action by which a person passes through an opening into a space. Entry includes ensuing work activities in that space and is considered to have occurred as soon as any part of the entrant's body breaks the plane of an opening into the space.

Hot work means any activity involving riveting, welding, burning, the use of powder-actuated tools or similar fire-producing operations. Grinding, drilling, abrasive blasting, or similar spark-producing operations are also considered hot work except when such operations are isolated physically from any atmosphere containing more than 10 percent of the lower explosive limit of a flammable or combustible substance.

Immediately dangerous to life or health (IDLH) means an atmosphere that poses an immediate threat to life or that is likely to result in acute or immediate severe health effects.

Inert or inerted atmosphere means an atmospheric condition where:

(a) The oxygen content of the atmosphere in the space is maintained at a level equal to or less than 8.0 percent by volume or at a level at or below 50 percent of the amount required to support combustion, whichever is less; or

(b) The space is flooded with water and the vapor concentration of flammable or combustible materials in the free space atmosphere above the water line is less than 10 percent of the lower explosive limit for the flammable or combustible material.

Labeled means identified with a sign, placard, or other form of written communication, including pictograms, that provides information on the status or condition of the work space to which it is attached.

Lower explosive limit (LEL) means the minimum concentration of vapor in air below which propagation of a flame does not occur in the presence of an ignition source.

Marine chemist means an individual who possesses a current marine chemist certificate issued by the National Fire Protection Association (NFPA).

NFPA means National Fire Protection Association.

Nationally Recognized Testing Laboratory (NRTL) means an organization recognized by OSHA, in accordance with Appendix A of 29 CFR 1910.7, which tests for safety and lists or labels or accepts equipment and materials that meet all the criteria found in Section 1910.7(b)(1) through (b)(4)(ii).

Not safe for hot work denotes a space where hot work may not be performed because the conditions do not meet the criteria for "safe for hot work."

Not safe for workers denotes a space where an employee may not enter because the conditions do not meet the criteria for "safe for workers."

Oxygen-deficient atmosphere means an atmosphere having an oxygen concentration of less than 19.5 percent by volume.

Oxygen-enriched atmosphere means an atmosphere that contains 22.0 percent or more oxygen by volume.

Safe for hot work denotes a space that meets all of the following criteria:

(a) The oxygen content of the atmosphere does not exceed 22.0 percent by volume;

(b) The concentration of flammable vapors in the atmosphere is less than 10 percent of the lower explosive limit;

(c) The residues or materials in the space are not capable of producing a higher concentration than permitted in (a) or (b) of the above, under existing atmospheric conditions in the presence of hot work and while maintained as directed by the marine chemist or competent person; and

(d) All adjacent spaces have been cleaned, or inerted, or treated sufficiently to prevent the spread of fire.

Safe for workers denotes a space that meets the following criteria:

(a) The oxygen content of the atmosphere is at least 19.5 percent and below 22.0 percent by volume;

(b) The concentration of flammable vapors is below 10 percent of the lower explosive limit (LEL);

(c) Any toxic materials in the atmosphere associated with cargo, fuel, tank coatings, or inerting media are within permissible concentrations at the time of the inspection; and

(d) Any residues or materials associated with the work authorized by the marine chemist, certified industrial hygienist, or competent person will not produce uncontrolled release of toxic materials under existing atmospheric conditions while maintained as directed.

Space means an area on a vessel or vessel section or within a shipyard such as, but not limited to: Cargo tanks or holds; pump or engine rooms; storage lockers; tanks containing flammable or combustible liquids, gases, or solids; rooms within buildings; crawl spaces; tunnels; or accessways. The atmosphere within a space is the entire area within its bounds.

Upper explosive limit (UEL) means the maximum concentration of flammable vapor in air above which propagation of flame does not occur on contact with a source of ignition.

Vessel section means a subassembly, module, or other component of a vessel being built, repaired, or broken.

Visual inspection means the physical survey of the space, its surroundings and contents to identify hazards such as, but not limited to, restricted accessibility, residues, unguarded machinery, and piping or electrical systems.

[Statutory Authority: Chapter 49.17 RCW. 95-04-006, § 296-304-020, filed 1/18/95, effective 3/10/95; 93-04-111 (Order 92-15), § 296-304-020, filed 2/3/93, effective 3/15/93; Order 74-25, § 296-304-020, filed 5/7/74.]

WAC 296-304-02001 Reserved.

[Statutory Authority: Chapter 49.17 RCW. 95-04-006, § 296-304-02001, filed 1/18/95, effective 3/10/95; Order 76-7, § 296-304-02001, filed 3/1/76; Order 74-25, § 296-304-02001, filed 5/7/74.]

WAC 296-304-02003 Precautions and the order of testing before entering confined and enclosed spaces and other dangerous atmospheres. The employer shall ensure that atmospheric testing is performed in the following sequence: Oxygen content, flammability, toxicity.

(1) Oxygen content.

(a) The employer shall ensure that the following spaces are visually inspected and tested by a competent person to determine the atmosphere's oxygen content prior to initial entry into the space by an employee:

(i) Spaces that have been sealed, such as, but not limited to, spaces that have been coated and closed up, and nonventilated spaces that have been freshly painted;

(ii) Spaces and adjacent spaces that contain or have contained combustible or flammable liquids or gases;

(iii) Spaces and adjacent spaces that contain or have contained liquids, gases, or solids that are toxic, corrosive, or irritant;

(iv) Spaces and adjacent spaces that have been fumigated; and

(v) Spaces containing materials or residues of materials that create an oxygen-deficient atmosphere.

(b) If the space to be entered contains an oxygen deficient atmosphere, the space shall be labeled "not safe for workers" or, if oxygen-enriched, "not safe for workers—not safe for hot work." If an oxygen-deficient or oxygen-enriched atmosphere is found, ventilation shall be provided at volumes and flow rates sufficient to ensure that the oxygen content is maintained at or above 19.5 percent and below 22.0 percent by volume. The warning label may be removed when the oxygen content is equal to or greater than 19.5 and less than 22.0 percent by volume.

(c) An employee may not enter a space where the oxygen content, by volume, is below 19.5 percent or above 22.0 percent.

Exception: An employee may enter for emergency rescue or for a short duration for installation of ventilation equipment necessary to start work in the space provided:

(i) The atmosphere in the space is monitored for oxygen content, by volume, continuously; and

(ii) Respiratory protection and other appropriate personal protective equipment and clothing are provided in accordance with WAC 296-304-090 through 296-304-09007.

Note to (a): Other provisions for work in IDLH atmospheres are located in WAC 296-304-090 through 296-304-09007.

(2) Flammable atmospheres.

(a) The employer shall ensure that spaces and adjacent spaces that contain or have contained combustible or flammable liquids or gases are:

(i) Inspected visually by the competent person to determine the presence of combustible or flammable liquids; and

(ii) Tested by a competent person prior to entry by an employee to determine the concentration of flammable vapors and gases within the space.

(b) If the concentration of flammable vapors or gases in the space to be entered is equal to or greater than 10 percent of the lower explosive limit, the space shall be labeled "not safe for workers" and "not safe for hot work." Ventilation shall be provided at volumes and flow rates sufficient to ensure that the concentration of flammable vapors is maintained below 10 percent of the lower explosive limit. The warning labels may be removed when the concentration of flammable vapors is below 10 percent of the lower explosive limit.

(c) An employee may not enter a space where the concentration of flammable vapors or gases is equal to or greater than 10 percent of the lower explosive limit.

Exception: An employee may enter for emergency rescue or for a short duration for installation of ventilation equipment necessary to start work in the space, provided:

(i) No ignition sources are present;

(ii) The atmosphere in the space is monitored continuously;

(iii) Atmospheres at or above the upper explosive limit are maintained; and

(iv) Respiratory protection and other appropriate personal protective equipment and clothing are provided in accordance with WAC 296-304-090 through 296-304-09007.

Note 1 to (2): Additional provisions for work in IDLH atmospheres are located in WAC 296-304-090 through 296-304-09007.

Note 2 to (2): Additional provisions for work in spaces containing a flammable substance which also has a permissible exposure limit, are located in subsection (3) of this section and chapter 296-62 WAC, Part H.

(3) Toxic, corrosive, irritant or fumigated atmospheres and residues.

(a) The employer shall ensure that spaces or adjacent spaces that contain or have contained liquids, gases, or solids that are toxic, corrosive or irritant are:

(i) Inspected visually by the competent person to determine the presence of toxic, corrosive, or irritant residue contaminants; and

(ii) Tested by a competent person prior to initial entry by an employee to determine the air concentration of toxics, corrosives, or irritants within the space.

(b) If a space contains an air concentration of a material which exceeds a chapter 296-62 WAC, Part H, permissible exposure limit (PEL) or is IDLH, the space shall be labeled "not safe for workers." Ventilation shall be provided at volumes and flow rates which will ensure that air concentrations are maintained within the PEL or, in the case of contaminants for which there is no established PEL, below the IDLH. The warning label may be removed when the concentration of contaminants is maintained within the PEL or below IDLH level.

(c) If a space cannot be ventilated to within the PELs or is IDLH, a marine chemist or CIH must re-test until the space can be certified "enter with restrictions" or "safe for workers."

(d) An employee may not enter a space whose atmosphere exceeds a PEL or is IDLH.

Exception: An employee may enter for emergency rescue, or for a short duration for installation of ventilation equipment provided:

(i) The atmosphere in the space is monitored continuously;

(ii) Respiratory protection and other necessary and appropriate personal protective equipment and clothing are provided in accordance with WAC 296-304-090 through 296-304-09007.

Note to (3): Other provisions for work in IDLH atmospheres are located in WAC 296-304-090 through 296-304-9007.

(4) Training of employees entering confined and enclosed spaces or other dangerous atmospheres.

(a) The employer shall ensure that each employee that enters a confined or enclosed space and other areas with dangerous atmospheres is trained to perform all required duties safely.

(b) The employer shall ensure that each employee who enters a confined space, enclosed space, or other areas with dangerous atmospheres is trained to:

(i) Recognize the characteristics of the confined space;

(ii) Anticipate and be aware of the hazards that may be faced during entry;

(iii) Recognize the adverse health effects that may be caused by the exposure to a hazard;

(iv) Understand the physical signs and reactions related to exposures to such hazards;

(v) Know what personal protective equipment is needed for safe entry into and exit from the space;

(vi) Use personal protective equipment; and

(vii) Where necessary, be aware of the presence and proper use of barriers that may be needed to protect an entrant from hazards.

(c) The employer shall ensure that each entrant into confined or enclosed spaces or other dangerous atmospheres is trained to exit the space or dangerous atmosphere whenever:

(i) The employer or his or her representative orders evacuation;

(ii) An evacuation signal such as an alarm is activated; or

(iii) The entrant perceives that he or she is in danger.

(d) The employer shall provide each employee with training:

(i) Before the entrant begins work addressed by this chapter; and

(ii) Whenever there is a change in operations or in an employee's duties that presents a hazard about which the employee has not previously been trained.

(e) The employer shall certify that the training required by (a) through (d) of this subsection has been accomplished.

(i) The certification shall contain the employee's name, the name of the certifier, and the date(s) of the certification.

(ii) The certification shall be available for inspection by the director, employees, and their representatives.

(5) Rescue teams. The employer shall either establish a shipyard rescue team or arrange for an outside rescue team which will respond promptly to a request for rescue service.

(a) Shipyard rescue teams shall meet the following criteria:

(i) Each employee assigned to the shipyard team shall be provided with and trained to use the personal protective equipment he or she will need, including respirators and any rescue equipment necessary for making rescues from confined and enclosed spaces and other dangerous atmospheres.

(ii) Each employee assigned to the shipyard rescue team shall be trained to perform his or her rescue functions including confined and enclosed and other dangerous atmosphere entry.

(iii) Shipyard rescue teams shall practice their skills at least once every 12 months. Practice drills shall include the use of mannequins and rescue equipment during simulated rescue operations involving physical facilities that approximate closely those facilities from which rescue may be needed.

Note to (5)(a)(iii): If the team performs an actual rescue during the 12 month period, an additional practice drill for that type of rescue is not required.

(iv) At least one person on each rescue team shall maintain current certification in basic first aid which includes maintenance of an airway, control of bleeding, maintenance of circulation and cardiopulmonary resuscitation (CPR) skills.

(b) The employer shall inform outside rescue teams of the hazards that the team may encounter when called to perform confined and enclosed space or other dangerous atmosphere rescue at the employer's facility so that the rescue team can be trained and equipped.

Note to (5): The criteria for in-house rescue, listed in (5)(a) can be used by the employer in evaluating outside rescue services.

(6) Exchanging hazard information between employers. Each employer whose employees work in confined and enclosed spaces or other dangerous atmospheres shall ensure that all available information on the hazards, safety rules, and emergency procedures concerning those spaces and atmospheres is exchanged with any other employer whose employees may enter the same spaces.

[Statutory Authority: RCW 49.17.010, [49.17].050 and [49.17].060. 95-22-015, § 296-304-02003, filed 10/20/95, effective 1/16/96. Statutory Authority: Chapter 49.17 RCW. 95-04-006, § 296-304-02003, filed 1/18/95, effective 3/10/95; 93-19-142 (Order 93-04), § 296-304-02003, filed 9/22/93, effective 11/1/93; Order 76-7, § 296-304-02003, filed 3/1/76; Order 74-25, § 296-304-02003, filed 5/7/74.]

WAC 296-304-02005 Cleaning and other cold work. (1) Locations covered by this section. The employer shall ensure that manual cleaning and other cold work are not performed in the following spaces unless the conditions of subsection (2) of this section have been met:

(a) Spaces containing or having last contained bulk quantities of combustible or flammable liquids or gases; and

(b) Spaces containing or having last contained bulk quantities of liquids, gases or solids that are toxic, corrosive or irritating.

(2) Requirements for performing cleaning or cold work.

(a) Liquid residues of hazardous materials shall be removed from work spaces as thoroughly as practicable before employees start cleaning operations or cold work in a space. Special care shall be taken to prevent the spilling or the draining of these materials into the water surrounding the vessel, or for shore-side operations, onto the surrounding work area.

(b) Testing shall be conducted by a competent person to determine the concentration of flammable, combustible, toxic, corrosive, or irritant vapors within the space prior to the beginning of cleaning or cold work.

(c) Continuous ventilation shall be provided at volumes and flow rates sufficient to ensure that the concentration(s) of:

(i) Flammable vapor is maintained below 10 percent of the lower explosive limit; and

Note to (2)(c)(i): Spaces containing highly volatile residues may require additional ventilation to keep the concentra-

tion of flammable vapors below 10 percent of the lower explosive limit and within the permissible exposure limit.

(ii) Toxic, corrosive, or irritant vapors are maintained within the permissible exposure limits and below IDLH levels.

(d) Testing shall be conducted by the competent person as often as necessary during cleaning or cold work to assure that air concentrations are below 10 percent of the lower explosive limit and within the PELs and below IDLH levels. Factors such as, but not limited to, temperature, volatility of the residues and other existing conditions in and about the spaces are to be considered in determining the frequency of testing necessary to assure a safe atmosphere.

Note to (2)(d): See WAC 296-304-02013—Appendix A, for additional information on frequency of testing.

(e) Spills or other releases of flammable, combustible, toxic, corrosive, and irritant materials shall be cleaned up as work progresses.

(f) An employee may not enter a confined or enclosed space or other dangerous atmosphere if the concentration of flammable or combustible vapors in work spaces exceeds 10 percent of the lower explosive limit.

Exception: An employee may enter for emergency rescue or for a short duration for installation of ventilation equipment provided:

(i) No ignition sources are present;

(ii) The atmosphere in the space is monitored continuously;

(iii) The atmosphere in the space is maintained above the upper explosive limit; and

(iv) Respiratory protection, personal protective equipment, and clothing are provided in accordance with WAC 206-304-090 through 296-304-09007.

Note to (2)(f): Other provisions for work in IDLH and other dangerous atmospheres are located in WAC 296-304-090 through 296-304-09007.

(g) A competent person shall test ventilation discharge areas and other areas where discharged vapors may collect to determine if vapors discharged from the spaces being ventilated are accumulating in concentrations hazardous to employees.

(h) If the tests required in (g) of this subsection indicate that concentrations of exhaust vapors that are hazardous to employees are accumulating, all work in the contaminated area shall be stopped until the vapors have dissipated or been removed.

(i) Only explosion-proof, self-contained portable lamps, or other electric equipment approved by a National Recognized Testing Laboratory (NRTL) for the hazardous location shall be used in spaces described in subsection (1) of this section, until such spaces have been certified as "safe for workers."

Note to (2)(i): Battery-fed, portable lamps or other electric equipment bearing the approval of a NRTL for the class, and division of the location in which they are used are deemed to meet the requirements of (i) of this subsection.

(j) The employer shall prominently post signs that prohibit sources of ignition within or near a space that has contained flammable or combustible liquids or gases in bulk quantities:

(i) At the entrance to those spaces;

(ii) In adjacent spaces; and

(iii) In the open area adjacent to those spaces.

(k) All air moving equipment and its component parts, including duct work, capable of generating a static electric discharge of sufficient energy to create a source of ignition, shall be bonded electrically to the structure of a vessel or vessel section or, in the case of land-side spaces, grounded to prevent an electric discharge in the space.

(l) Fans shall have nonsparking blades, and portable air ducts shall be of nonsparking materials.

Note to (2): See WAC 296-304-02003(3) and applicable requirements of chapter 296-62 WAC, general occupational health standards, for other provisions affecting cleaning and cold work.

[Statutory Authority: Chapter 49.17 RCW. 95-04-006, § 296-304-02005, filed 1/18/95, effective 3/10/95; Order 74-25, § 296-304-02005, filed 5/7/74.]

WAC 296-304-02007 Hot work. (1) Hot work requiring testing by a marine chemist or Coast Guard authorized person.

(a) The employer shall ensure that hot work is not performed in or on any of the following confined and enclosed spaces and other dangerous atmospheres, boundaries of spaces or pipelines until the work area has been tested and certified by a marine chemist or a U.S. Coast Guard authorized person as "safe for hot work":

(i) Within, on, or immediately adjacent to spaces that contain or have contained combustible or flammable liquids or gases.

(ii) Within, on, or immediately adjacent to fuel tanks that contain or have last contained fuel; and

(iii) On pipelines, heating coils, pump fittings or other accessories connected to spaces that contain or have last contained fuel.

(iv) Exception: On dry cargo, miscellaneous and passenger vessels and in the landside operations within spaces which meet the standards for oxygen, flammability and toxicity in WAC 296-304-02003, but are adjacent to spaces containing flammable gases or liquids, as long as the gases or liquids with a flash point below 150 deg. F (65.6 deg. C) when the distance between such spaces and the work is 25 feet (7.62 m) or greater.

Note: For flammable liquids with flash points above 150 deg. F (65.6 deg. C), see subsection (2) of this section.

Note to (1)(a): The criteria for "safe for hot work" is located in the definition section, WAC 296-304-020(2).

(b) The certificate issued by the marine chemist or Coast Guard authorized person shall be posted in the immediate vicinity of the affected operations while they are in progress and kept on file for a period of at least three months from the date of the completion of the operation for which the certificate was generated.

(2) Hot work requiring testing by a competent person.

(a) Hot work is not permitted in or on the following spaces or adjacent spaces or other dangerous atmospheres until they have been tested by a competent person and determined to contain no concentrations of flammable vapors

equal to or greater than 10 percent of the lower explosive limit:

(i) Dry cargo holds;

(ii) The bilges;

(iii) The engine room and boiler spaces for which a marine chemist or a Coast Guard authorized person certificate is not required under subsection (1)(a)(i) of this section; and

(iv) Vessels and vessel sections for which a marine chemist or Coast Guard authorized person certificate is not required under subsection (1)(a)(i) of this section; and

(v) Land-side confined and enclosed spaces or other dangerous atmospheres not covered by subsection (1)(a) of this section.

(b) If the concentration of flammable vapors or gases is equal to or greater than 10 percent of the lower explosive limit in the space or an adjacent space where the hot work is to be done, then the space shall be labeled "not safe for hot work" and ventilation shall be provided at volumes and flow rates sufficient to ensure that the concentration of flammable vapors or gases is below 10 percent by volume of the lower explosive limit. The warning label may be removed when the concentration of flammable vapors and gases are below 10 percent of the lower explosive limit.

Note to WAC 296-304-02007: See WAC 296-304-02013—Appendix A, for additional information relevant to performing hot work safely.

[Statutory Authority: RCW 49.17.010, 49.17.040, 49.17.050, and 49.17.060. 03-04-099, § 296-304-02007, filed 2/4/03, effective 8/1/03. Statutory Authority: RCW 49.17.010, [49.17].050 and [49.17].060. 95-22-015, § 296-304-02007, filed 10/20/95, effective 1/16/96. Statutory Authority: Chapter 49.17 RCW. 95-04-006, § 296-304-02007, filed 1/18/95, effective 3/10/95; Order 76-7, § 296-304-02007, filed 3/1/76; Order 74-25, § 296-304-02007, filed 5/7/74.]

WAC 296-304-02009 Maintenance of safe conditions. (1) Preventing hazardous materials from entering. Pipelines that could carry hazardous materials into spaces that have been certified "safe for workers" or "safe for hot work" shall be disconnected, blanked off, or otherwise blocked by a positive method to prevent hazardous materials from being discharged into the space.

(2) Alteration of existing conditions. When a change that could alter conditions within a tested confined or enclosed space or other dangerous atmosphere occurs, work in the affected space or area shall be stopped. Work may not be resumed until the affected space or area is visually inspected and retested and found to comply with WAC 296-304-02003, 296-304-02005, and 296-304-02007, as applicable.

Note to (2): Examples of changes that would warrant the stoppage of work include: The opening of manholes or other closures or the adjusting of a valve regulating the flow of hazardous materials.

(3) Tests to maintain the conditions of a marine chemist's or Coast Guard authorized person's certificates. A competent person shall visually inspect and test each space certified as "safe for workers" or "safe for hot work," as often as necessary to ensure that atmospheric conditions within that space are maintained within the conditions established by the certificate after the certificate has been issued.

(4) Change in the conditions of a marine chemist's or Coast Guard authorized person's certificate. If a competent person finds that the atmospheric conditions within a certified space fail to meet the applicable requirements of WAC 296-304-02003, 296-304-02005, and 296-304-02007, work in the certified space shall be stopped and may not be resumed until the space has been retested by a marine chemist or Coast Guard authorized person and a new certificate issued in accordance with WAC 296-304-02007(1).

(5) Tests to maintain a competent person's findings. After a competent person has conducted a visual inspection and tests required in WAC 296-304-02003, 296-304-02005, and 296-304-02007 and determined a space to be safe for an employee to enter, he or she shall continue to test and visually inspect spaces as often as necessary to ensure that the required atmospheric conditions within the tested space are maintained.

(6) Changes in conditions determined by competent person's findings. After the competent person has determined initially that a space is safe for an employee to enter and he or she finds subsequently that the conditions within the tested space fail to meet the requirements of WAC 296-304-02003, 296-304-02005, and 296-304-02007, as applicable, work shall be stopped until the conditions in the tested space are corrected to comply with WAC 296-304-02003, 296-304-02005, and 296-304-02007, as applicable.

[Statutory Authority: RCW 49.17.010, 49.17.040, 49.17.050, and 49.17.060. 03-04-099, § 296-304-02009, filed 2/4/03, effective 8/1/03. Statutory Authority: RCW 49.17.010, [49.17].050 and [49.17].060. 95-22-015, § 296-304-02009, filed 10/20/95, effective 1/16/96. Statutory Authority: Chapter 49.17 RCW. 95-04-006, § 296-304-02009, filed 1/18/95, effective 3/10/95; Order 76-7, § 296-304-02009, filed 3/1/76; Order 74-25, § 296-304-02009, filed 5/7/74.]

WAC 296-304-02011 Warning signs and labels. (1) Employee comprehension of signs and labels. The employer shall ensure that each sign or label posted to comply with the requirements of this section is presented in a manner that can be perceived and understood by all employees.

(2) Posting of large work areas. A warning sign or label required by subsection (1) of this section need not be posted at an individual tank, compartment or work space within a work area if the entire work area has been tested and certified: "Not safe for workers," "not safe for hot work," and if the sign or label to this effect is posted conspicuously at each means of access to the work area.

[Statutory Authority: Chapter 49.17 RCW. 95-04-006, § 296-304-02011, filed 1/18/95, effective 3/10/95; Order 74-25, § 296-304-02011, filed 5/7/74.]

WAC 296-304-02013 Appendix A—Compliance assistance guidelines for confined and enclosed spaces and other dangerous atmospheres. This appendix is a nonmandatory set of guidelines provided to assist employers in complying with the requirements of WAC 296-304-020 through 296-304-02011. This appendix neither creates additional obligations nor detracts from obligations otherwise contained in this chapter. It is intended to provide explanatory information and educational material to employers and employees to foster understanding of, and compliance with, this chapter.

WAC 296-304-020 through 296-304-02011. These standards are minimum safety standards for entering and working safely in vessel tanks and compartments.

WAC 296-304-020(2) Definition of "Hot work." There are several instances in which circumstances do not necessitate that grinding, drilling, abrasive blasting be regarded as hot work. Some examples are:

(1) Abrasive blasting of the hull for paint preparation does not necessitate pumping and cleaning the tanks of a vessel.

(2) Prior to hot work on any hollow structure, the void space should be tested and appropriate precautions taken.

WAC 296-304-020(2) Definition of "Lower explosive limit." The terms lower flammable limit (LFL) and lower explosive limit (LEL) are used interchangeably in fire science literature.

WAC 296-304-020(2) Definition of "Upper explosive limit." The terms upper flammable limit (UFL) and upper explosive limit (UEL) are used interchangeably in fire science literature.

WAC 296-304-02003(1) After a tank has been properly washed and ventilated, the tank should contain 20.8 percent oxygen by volume. This is the same amount found in our normal atmosphere at sea level. However, it is possible that the oxygen content will be lower. When this is the case, the reasons for this deficiency should be determined and corrective action taken.

An oxygen content of 19.5 percent can support life and is adequate for entry. However, any oxygen level less than 20.8 percent and greater than 19.5 percent level should also alert the competent person to look for the causes of the oxygen deficiency and to correct them prior to entry.

WAC 296-304-02003(2) Flammable atmospheres. Atmospheres with a concentration of flammable vapors at or above 10 percent of the lower explosive limit (LEL) are considered hazardous when located in confined spaces. However, atmospheres with flammable vapors below 10 percent of the LEL are not necessarily safe.

Such atmospheres are too lean to burn. Nevertheless, when a space contains or produces measurable flammable vapors below the 10 percent LEL, it might indicate that flammable vapors are being released or introduced into the space and could present a hazard in time. Therefore, the cause of the vapors should be investigated and, if possible, eliminated prior to entry.

Some situations that have produced measurable concentrations of flammable vapors that could exceed 10 percent of the LEL in time are:

(1) Pipelines that should have been blanked or disconnected have opened, allowing product into the space.

(2) The vessel may have shifted, allowing product not previously cleaned and removed during washing to move into other areas of the vessel.

(3) Residues may be producing the atmosphere by releasing flammable vapor.

WAC 296-304-02003(2) Flammable atmospheres that are toxic. An atmosphere with a measurable concentration of a flammable substance below 10 percent of the LEL may be above the WISHA permissible exposure limit for that substance. In that case, refer to WAC 296-304-02003 (3)(b), (c), and (d).

WAC 296-304-02005 (2)(d), 296-304-02009(3), and 296-304-02009(5). The frequency with which a tank is monitored to determine if atmospheric conditions are being maintained is a function of several factors that are discussed below:

(1) Temperature. Higher temperatures will cause a combustible or flammable liquid to vaporize at a faster rate than lower temperatures. This is important since hotter days may cause tank residues to produce more vapors and that may result in the vapors exceeding 10 percent of the LEL or an overexposure to toxic contaminants.

(2) Work in the tank. Any activity in the tank could change the atmospheric conditions in that tank. Oxygen from a leaking oxyfuel hose or torch could result in an oxygen-enriched atmosphere that would more easily propagate a flame. Some welding operations use inert gas, and leaks can result in an oxygen-deficient atmosphere. Manual tank cleaning with high pressure spray devices can stir up residues and result in exposures to toxic contaminants. Simple cleaning or mucking out, where employees walk through and shovel residues and sludge, can create a change in atmospheric conditions.

(3) Period of time elapsed. If a period of time has elapsed since a marine chemist or Coast Guard authorized person has certified a tank as safe, the atmospheric condition should be rechecked by the competent person prior to entry and starting work.

(4) Unattended tanks or spaces. When a tank or space has been tested and declared safe, then subsequently left unattended for a period of time, it should be retested prior to entry and starting work. For example, when barges are left unattended at night, unidentified products from another barge are sometimes dumped into their empty tanks. Since this would result in a changed atmosphere, the tanks should be retested prior to entry and starting work.

(5) Work break. When workers take a break or leave at the end of the shift, equipment sometimes is inadvertently left in the tanks. At lunch or work breaks and at the end of the shift are the times when it is most likely someone will leave a burning or cutting torch in the tank, perhaps turned on and leaking oxygen or an inert gas. Since the former can produce an oxygen-enriched atmosphere, and the latter an oxygen-deficient atmosphere, tanks should be checked for equipment left behind, and atmosphere, monitored if necessary prior to re-entering and resuming work. In an oxygen-enriched atmosphere, the flammable range is severely broadened. This means that an oxygen-enriched atmosphere can promote very rapid burning.

(6) Ballasting or trimming. Changing the position of the ballast, or trimming or in any way moving the vessel so as to expose cargo that had been previously trapped, can produce a change in the atmosphere of the tank. The atmosphere should be retested after any such move and prior to entry or work.

WAC 296-304-02007 (1) and (2) hot work. This is a reminder that other sections of the WISHA shipyard safety and health standards in chapter 296-304 WAC should be reviewed prior to starting any hot work. Most notably, WAC 296-304-040 through 296-304-04013, welding, cutting and heating, places additional restrictions on hot work: The requirements of WAC 296-304-04001 and 296-304-04005 must be met before hot work is begun on any metal that is

toxic or is covered by a preservative coating respectively; the requirements of WAC 296-304-04007 must be met before welding, cutting, or heating is begun on any structural voids.

WAC 296-304-02003 (1)(b). During hot work, more than 20.8 percent oxygen by volume can be unsafe since it extends the normal flammable range. The standard permits the oxygen level to reach 22.0 percent by volume in order to account for instrument error. However, the cause of excess oxygen should be investigated and the source removed.

WAC 296-304-02011(2). If the entire vessel has been found to be in the same condition, then employers shall be considered to be in compliance with this requirement when signs using appropriate warning language in accordance with WAC 296-304-02011(1) are posted at the gangway and at all other means of access to the vessel.

[Statutory Authority: Chapter 49.17 RCW. 95-04-006, § 296-304-02013, filed 1/18/95, effective 3/10/95.]

WAC 296-304-02015 Appendix B—Confined and enclosed spaces and other dangerous atmospheres in shipyard employment. This appendix provides a complete reprint of U.S. Coast Guard regulations as of October 1, 1993 referenced in WAC 296-304-020 for purposes of determining who is a Coast Guard authorized person.

(1) Title 46 CFR 35.01-1 (a) through (c) covering hot work on tank vessels reads as follows:

(a) The provisions of "Standard for the Control of Gas Hazards on Vessels to be Repaired," NFPA No. 306, published by National Fire Protection Association, 1 Batterymarch Park, Quincy, MA 02269, shall be used as a guide in conducting the inspections and issuance of certificates required by this chapter.

(b) Until an inspection has been made to determine that such operation can be undertaken with safety, no alterations, repairs, or other such operations involving riveting, welding, burning, or like fire-producing actions shall be made:

(i) Within or on the boundaries of cargo tanks that have been used to carry flammable or combustible liquid or chemicals in bulk, or within spaces adjacent to such cargo tanks; or

(ii) Within or on the boundaries of fuel tanks; or

(iii) To pipe lines, heating coils, pumps, fittings, or other appurtenances connected to such cargo or fuel tanks.

(c) Such inspections shall be made and evidenced as follows:

(i) In ports or places in the United States or its territories and possessions, the inspection shall be made by a marine chemist certificated by the National Fire Protection Association; however, if the services of such certified marine chemists are not reasonably available, the Officer in Charge, Marine Inspection, upon the recommendation of the vessel owner and his/her contractor or their representative, shall select a person who, in the case of an individual vessel, shall be authorized to make such inspection.

(ii) If the inspection indicates that such operations can be undertaken with safety, a certificate setting forth the fact in writing and qualified as may be required, shall be issued by the certified marine chemist or the authorized person before the work is started.

(iii) Such qualifications shall include any requirements as may be deemed necessary to maintain, insofar as can reasonably be done, the safe conditions in the spaces certified, throughout the operation and shall include such additional tests and certifications as considered required.

(iv) Such qualifications and requirements shall include precautions necessary to eliminate or minimize hazards that may be present from protective coatings or residues from cargoes.

(2) Title 46 CFR 71.60(c)(1) covering hot work on passenger vessels reads as follows:

(a) The provisions of "Standard for the Control of Gas Hazards on Vessels to be Repaired," NFPA No. 306, published by National Fire Protection Association, 1 Batterymarch Park, Quincy, MA 02269, shall be used as a guide in conducting the inspections and issuance of certificates required by this chapter.

(b) Until an inspection has been made to determine that such operation can be undertaken with safety, no alterations, repairs, or other such operations involving riveting, welding, burning, or like fire-producing actions shall be made:

(i) Within or on the boundaries of cargo tanks which have been used to carry flammable or combustible liquid or chemicals in bulk, or within spaces adjacent to such cargo tanks; or

(ii) Within or on the boundaries of fuel tanks; or

(iii) To pipe lines, heating coils, pumps, fittings, or other appurtenances connected to such cargo or fuel tanks.

(c) Such inspections shall be made and evidenced as follows:

(i) In ports or places in the United States or its territories and possessions the inspection shall be made by a marine chemist certificated by the National Fire Protection Association; however, if the services of such certified marine chemist are not reasonably available, the Officer in Charge, Marine Inspection, upon the recommendation of the vessel owner and his/her contractor or their representative, shall select a person who, in the case of an individual vessel, shall be authorized to make such inspection.

(ii) If the inspection indicated that such operations can be undertaken with safety, a certificate setting forth the fact in writing and qualified as may be required, shall be issued by the certified marine chemist or the authorized person before the work is started.

(iii) Such qualifications shall include any requirements as may be deemed necessary to maintain, insofar as can reasonably be done, the safe conditions in the spaces certified throughout the operation and shall include such additional tests and certifications as considered required.

(iv) Such qualifications and requirements shall include precautions necessary to eliminate or minimize hazards that may be present from protective coatings or residues from cargoes.

(3) Title 46 CFR 91.50-1(c)(1) covering hot work on cargo and miscellaneous vessels as follows:

(a) The provisions of "Standard for the Control of Gas Hazards on Vessels to be Repaired," NFPA No. 306, published by National Fire Protection Association, 1 Batterymarch Park, Quincy, MA 02269, shall be used as a guide in conducting the inspections and issuance of certificates required by this chapter.

(b) Until an inspection has been made to determine that such operation can be undertaken with safety, no alterations,

repairs, or other such operations involving riveting, welding, burning, or like fire-producing actions shall be made:

(i) Within or on the boundaries of cargo tanks which have been used to carry flammable or combustible liquid or chemicals in bulk, or within spaces adjacent to such cargo tanks; or,

(ii) Within or on the boundaries of fuel tanks; or,

(iii) To pipe lines, heating coils, pumps, fittings, or other appurtenances connected to such cargo or fuel tanks.

(c) Such inspections shall be made and evidenced as follows:

(i) In ports or places in the United States or its territories and possessions the inspection shall be made by a marine chemist certificated by the National Fire Protection Association; however, if the services of such certified marine chemist are not reasonably available, the Officer in Charge, Marine Inspection, upon the recommendation of the vessel owner and his/her contractor or their representative, shall select a person who, in the case of an individual vessel, shall be authorized to make such inspection.

(ii) If the inspection indicated that such operations can be undertaken with safety, a certificate setting forth the fact in writing and qualified as may be required, shall be issued by the certified marine chemist or the authorized person before the work is started.

(iii) Such qualifications shall include any requirements as may be deemed necessary to maintain, insofar as can reasonably be done, the safe conditions in the spaces certified throughout the operation and shall include such additional tests and certifications as considered required.

(iv) Such qualifications and requirements shall include precautions necessary to eliminate or minimize hazards that may be present from protective coatings or residues from cargoes.

[Statutory Authority: Chapter 49.17 RCW. 95-04-006, § 296-304-02015, filed 1/18/95, effective 3/10/95.]

WAC 296-304-030 Surface preparation and preservation—Scope and application. All sections of this chapter which include WAC 296-304-030 in the section number apply to surface preparation and preservation and WAC 296-304-03001 to 296-304-03009 applies only to shipbuilding and ship repairing.

[Order 74-25, § 296-304-030, filed 5/7/74.]

WAC 296-304-03001 Toxic cleaning solvents. (1) When toxic solvents are used, the employer shall employ one or more of the following measures to safeguard the health of employees exposed to these solvents.

(a) The cleaning operation shall be completely enclosed to prevent the escape of vapor into the working space.

(b) Either natural ventilation or mechanical exhaust ventilation shall be used to remove the vapor at the source and to dilute the concentration of vapors in the working space to a concentration which is safe for the entire work period.

(c) The employer must ensure that employees are protected against:

• Toxic vapors by suitable respiratory protective equipment that meets the requirements of chapter 296-62 WAC, Part E; and

• Exposure of skin and eyes to contact with toxic solvents and their vapors by suitable clothing and equipment.

(2) The principles in the threshold limit values to which attention is directed in WAC 296-304-02005 and applicable sections in chapter 296-62 WAC will be used by the department of labor and industries in enforcement proceedings in defining a safe concentration of air contaminants.

(3) When flammable solvents are used, precautions shall be taken in accordance with the requirements of WAC 296-304-03009.

[Statutory Authority: RCW 49.17.040, [49.17].050 and [49.17].060. 98-02-006, § 296-304-03001, filed 12/26/97, effective 3/1/98. Statutory Authority: Chapter 49.17 RCW. 95-04-006, § 296-304-03001, filed 1/18/95, effective 3/10/95; 93-19-142 (Order 93-04), § 296-304-03001, filed 9/22/93, effective 11/1/93; Order 76-7, § 296-304-03001, filed 3/1/76; Order 74-25, § 296-304-03001, filed 5/7/74.]

WAC 296-304-03003 Chemical paint and preservative removers. (1) The employer must ensure that employees are protected against:

• Skin contact during the handling and application of chemical paint and preservative removers; and

• Eye injury by goggles or face shields that meet the requirements of WAC 296-304-09005 (1) and (2).

(2) When using flammable paint and preservative removers precautions shall be taken in accordance with the requirements of WAC 296-304-03009.

(3) When using chemical paint and preservative removers which contain volatile and toxic solvents, such as benzol, acetone and amyl acetate, the provisions of WAC 296-304-03001 shall be applicable.

(4) The employer must ensure that employees using paint and rust removers containing strong acids or alkalies are protected by suitable face shields to prevent chemical burns on the face and neck according to the requirements of WAC 296-304-09005 (1) and (2).

(5) The employer must ensure that all employees working within range of a steam gun blast are protected by suitable face shields according to the requirements of WAC 296-304-09005 (1) and (2). Metal parts of the steam gun itself must be insulated to protect the operator against heat burns.

[Statutory Authority: RCW 49.17.040, [49.17].050 and [49.17].060. 98-02-006, § 296-304-03003, filed 12/26/97, effective 3/1/98; Order 74-25, § 296-304-03003, filed 5/7/74.]

WAC 296-304-03005 Mechanical paint removers. (1) Power tools.

(a) The employer must ensure that employees engaged in the removal of paints, preservatives, rusts or other coatings by means of power tools are protected against eye injury by goggles or face shields that meets the requirements of WAC 296-304-09005 (1) and (2).

(b) All portable rotating tools used for the removal of paints, preservatives, rusts or other coatings shall be adequately guarded to protect both the operator and nearby workers from flying missiles.

(c) Portable electric tools shall be grounded in accordance with the requirements of WAC 296-304-08003 (1) and (2).

(d) In a confined space, the employer must provide mechanical exhaust ventilation sufficient to keep the dust concentration to a minimum, or must protect employees by

respiratory protective equipment that meets the requirements of chapter 296-62 WAC, Part E.

(2) Flame removal.

(a) The employer must ensure that when hardened preservative coatings are removed by flame in enclosed spaces, the employees exposed to fumes are protected by air line respirators that meet the requirements of chapter 296-62 WAC, Part E. Employees performing this operation in the open air, and those exposed to the resulting fumes, must be protected by a fume filter respirator that meets the requirements of WAC 296-62-071.

(b) Flame or heat shall not be used to remove soft and greasy preservative coatings.

(3) Abrasive blasting.

(a) Equipment. Hoses and fittings used for abrasive blasting shall meet the following requirements:

(i) Hoses. Hose of a type to prevent shocks from static electricity shall be used.

(ii) Hose couplings. Hose lengths shall be joined by metal couplings secured to the outside of the hose to avoid erosion and weakening of the couplings.

(iii) Nozzles. Nozzles shall be attached to the hose by fittings that will prevent the nozzle from unintentionally becoming disengaged. Nozzle attachments shall be of metal and shall fit onto the hose externally.

(iv) Dead man control. A dead man control device shall be provided at the nozzle end of the blasting hose either to provide direct cutoff or to signal the pot tender by means of a visual and audible signal to cut off the flow, in the event the blaster loses control of the hose. The pot tender shall be available at all times to respond immediately to the signal.

(b) Replacement. Hoses and all fittings used for abrasive blasting shall be inspected frequently to insure timely replacement before an unsafe amount of wear has occurred.

(c) Personal protective equipment.

(i) The employer must ensure that abrasive blasters working in enclosed spaces are protected by abrasive blasting respirators that meet the requirements of WAC 296-24-675 and chapter 296-62 WAC, Part E.

(ii) The employer must ensure that abrasive blasters working in the open are protected as required in subsection (1) of this section.

Exception: When synthetic abrasives containing less than one percent free silica are used, the employer may substitute particulate or dust filter respirators that are approved by the National Institute of Safety and Health (NIOSH) and used according to WAC 296-62-071.

(iii) The employer must ensure that employees, including machine tenders and abrasive recovery workers, working in areas where unsafe concentrations of abrasive materials and dusts are present are protected by eye and respiratory protective equipment that meets the requirements of WAC 296-304-09005 (1) and (2) and chapter 296-62 WAC, Part E.

Exception: This requirement does not apply to blasters.

(iv) The employer must ensure that a blaster is protected against injury from exposure to the blast by appropriate protective clothing, including gloves that meet the requirements of WAC 296-304-09015(1).

(v) A surge from a drop in pressure in the hose line can throw a blaster off the staging. To protect against this hazard, the employer must ensure that a blaster is protected by a personal fall arrest system, that meets the requirements of WAC 296-304-09021. The personal fall arrest system must be tied off to the ship or other structure during blasting from elevations where adequate fall protection cannot be provided by railings.

[Statutory Authority: RCW 49.17.010, [49.17].040 and [49.17].050. 99-10-071, § 296-304-03005, filed 5/4/99, effective 9/1/99. Statutory Authority: RCW 49.17.040, [49.17].050 and [49.17].060. 98-02-006, § 296-304-03005, filed 12/26/97, effective 3/1/98. Statutory Authority: Chapter 49.17 RCW. 95-04-006, § 296-304-03005, filed 1/18/95, effective 3/10/95; 93-19-142 (Order 93-04), § 296-304-03005, filed 9/22/93, effective 11/1/93; Order 76-7, § 296-304-03005, filed 3/1/76; Order 74-25, § 296-304-03005, filed 5/7/74.]

WAC 296-304-03007 Painting. All respirators required by this section must meet the requirements of chapter 296-62 WAC, Part E.

(1) Paints mixed with toxic vehicles or solvents.

(a) When employees spray paints mixed with toxic vehicles or solvents, the employer must ensure that the following conditions are met:

(i) In confined spaces, employees continuously exposed to spraying are protected by air line respirators.

(ii) In tanks or compartments, employees continuously exposed to spraying are protected by air line respirators. Where mechanical ventilation is provided, employees are protected by respirators.

(iii) In large and well ventilated areas, employees exposed to spraying are protected by respirators.

(b) The employer must ensure that where employees apply by brush paints with toxic solvents in confined spaces or other areas where lack of ventilation creates a hazard, the employees are protected by filter respirators.

(c) When flammable paints or vehicles are used, precautions shall be taken in accordance with the requirements of WAC 296-304-03009.

(d) The metallic parts of air moving devices, including fans, blowers, and jet-type air movers, and all duct work shall be electrically bonded to the vessel's structure.

(2) Paints and tank coatings dissolved in highly volatile, toxic and flammable solvents. Several organic coatings, adhesives and resins are dissolved in highly toxic, flammable and explosive solvents with flash points below 80°F. Work involving such materials shall be done only when all of the following special precautions have been taken:

(a) Sufficient exhaust ventilation shall be provided to keep the concentration of solvent vapors below ten percent of the lower explosive limit. Frequent tests shall be made by a competent person to ascertain the concentration.

(b) If the ventilation fails or if the concentration of solvent vapors reaches or exceeds ten percent of the lower explosive limit, painting shall be stopped and the compartment shall be evacuated until the concentration again falls below ten percent of the lower explosive limit. If the concentration does not fall when painting is stopped, additional ventilation to bring the concentration down to ten percent of the lower explosive limit shall be provided.

(c) Ventilation shall be continued after the completion of painting until the space or compartment is gas free. The final determination as to whether the space or compartment is gas

free shall be made after the ventilating equipment has been shut off for a least ten minutes.

(d) Exhaust ducts shall discharge clear of working areas and away from sources of possible ignition. Periodic tests shall be made to ensure that the exhausted vapors are not accumulating in other areas within or around the vessel or dry dock.

(e) All motors and control equipment shall be of the explosion-proof type. Fans shall have nonferrous blades. Portable air ducts shall also be of nonferrous materials. All motors and associated control equipment shall be properly maintained and grounded.

(f) Only nonsparking paint buckets, spray guns and tools shall be used. Metal parts of paint brushes and rollers shall be insulated. Staging shall be erected in a manner which ensures that it is nonsparking.

(g) Only explosion proof lights, approved by the Underwriters' Laboratories for use in Class I, Group D atmospheres, or approved as permissible by the U.S. Bureau of Mines or the U.S. Coast Guard, shall be used.

(h) A competent person shall inspect all power and lighting cables to ensure that the insulation is in excellent condition, free of all cracks and worn spots, that there are no connections within fifty feet of the operation, that lines are not overloaded, and that they are suspended with sufficient slack to prevent undue stress or chafing.

(i) The face, eyes, head, hands and all other exposed parts of the bodies of employees handling highly volatile paints must be protected according to WAC 296-304-090. All footwear must be nonsparking, such as rubbers, rubber boots or rubber soled shoes without nails. Coveralls or other outer clothing must be made of cotton. Rubber gloves, instead of plastic gloves, must be used to protect against the danger of static sparks.

(j) No matches, lighted cigarettes, cigars, or pipes, and no cigarette lighters or ferrous articles shall be taken into the area where work is being done.

(k) All solvent drums taken into the compartment shall be placed on nonferrous surfaces and shall be grounded to the vessel. Metallic contact shall be maintained between containers and drums when materials are being transferred from one to another.

(l) Spray guns, paint pots, and metallic parts of connecting tubing shall be electrically bonded, and the bonded assembly shall be grounded to the vessel.

(m) The employer must ensure that all employees continuously in a compartment in which such painting is performed, are protected by air line respirators and by suitable protective clothing. Employees entering such compartments for a limited time must be protected by filter cartridge type respirators.

(n) The employer must ensure that all employees doing exterior paint spraying with such paints are protected by suitable filter cartridge type respirators and by suitable protective clothing.

[Statutory Authority: RCW 49.17.010, 49.17.040, 49.17.050, and 49.17.060. 03-04-099, § 296-304-03007, filed 2/4/03, effective 8/1/03. Statutory Authority: RCW 49.17.040, [49.17].050 and [49.17].060. 98-02-006, § 296-304-03007, filed 12/26/97, effective 3/1/98. Statutory Authority: Chapter 49.17 RCW. 95-04-006, § 296-304-03007, filed 1/18/95, effective 3/10/95; 93-19-142 (Order 93-04), § 296-304-03007, filed 9/22/93, effective 11/1/93; Order 76-7, § 296-304-03007, filed 3/1/76; Order 74-25, § 296-304-03007, filed 5/7/74.]

WAC 296-304-03009 Flammable liquids. (1) In all cases when liquid solvents, paint and preservative removers, paints or vehicles, other than those covered by WAC 296-304-03007(2), are capable of producing a flammable atmosphere under the conditions of use the following precautions shall be taken:

(a) Smoking, open flames, arcs and spark-producing equipment shall be prohibited in the area.

(b) Ventilation shall be provided in sufficient quantities to keep the concentration of vapors below ten percent of their lower explosive limit. Frequent tests shall be made by a competent person to ascertain the concentration.

(c) Scrapings and rags soaked with these materials shall be kept in a covered metal container.

(d) Only explosion proof lights, approved by the Underwriters' Laboratories for use in Class I, Group D atmospheres, or approved as permissible by the U.S. Bureau of Mines or the U.S. Coast Guard, shall be used.

(e) A competent person shall inspect all power and lighting cables to ensure that the insulation is in excellent condition, free of all cracks and worn spots, that there are no connections within fifty feet of the operation, that lines are not overloaded, and that they are suspended with sufficient slack to prevent undue stress or chafing.

(f) Suitable fire extinguishing equipment shall be immediately available in the work area and shall be maintained in a state of readiness for instant use.

[Order 74-25, § 296-304-03009, filed 5/7/74.]

WAC 296-304-040 Welding, cutting and heating—Scope and application. All sections of this chapter which include WAC 296-304-040 in the section number apply to welding, cutting and heating.

[Order 74-25, § 296-304-040, filed 5/7/74.]

WAC 296-304-04001 Ventilation and protection in welding, cutting and heating. (1) Mechanical ventilation requirements.

(a) For the purposes of this section, mechanical ventilation shall meet the following requirements:

(i) Mechanical ventilation shall consist of either general mechanical ventilation systems or local exhaust systems.

(ii) General mechanical ventilation shall be of sufficient capacity and so arranged as to produce the number of air changes necessary to maintain welding fumes and smoke within safe limits.

(iii) Local exhaust ventilation shall consist of freely movable hoods intended to be placed by the welder or burner as close as practicable to the work. This system shall be of sufficient capacity and so arranged as to remove fumes and smoke at the source and keep the concentration of them in the breathing zone within safe limits.

(iv) Contaminated air exhausted from a working space shall be discharged into the open air or otherwise clear of the source of intake air.

(v) All air replacing that withdrawn shall be clean and respirable.

(vi) Oxygen shall not be used for ventilation purposes, comfort cooling, blowing dust or dirt from clothing, or for cleaning the work area.

(2) Welding, cutting and heating in confined spaces.

(a) Except as provided in WAC 296-304-04001 (2)(c) and (3)(b), either general mechanical or local exhaust ventilation meeting the requirements of (1) of this section shall be provided whenever welding, cutting or heating is performed in a confined space.

(b) The means of access shall be provided to a confined space and ventilation ducts to this space shall be arranged in accordance with WAC 296-304-05011 (2)(a) and (b).

(c) When sufficient ventilation cannot be obtained without blocking the means of access, employees in the confined space shall be protected by air line respirators in accordance with the requirements of chapter 296-62 WAC, Part E, and an employee on the outside of such a confined space shall be assigned to maintain communication with those working within it and to aid them in an emergency.

(3) Welding, cutting or heating of metals of toxic significance.

(a) Welding, cutting or heating in any enclosed spaces aboard the vessel involving the metals specified in this subsection shall be performed with either general mechanical or local exhaust ventilation meeting the requirements of (1) of this section.

(i) Zinc-bearing base or filler metals or metals coated with zinc-bearing materials.

(ii) Lead base metals.

(iii) Cadmium-bearing filler materials.

(iv) Chromium-bearing metals or metals coated with chromium-bearing materials.

(b) Welding, cutting, or heating in any enclosed spaces aboard the vessel involving the metals specified in this subsection shall be performed with local exhaust ventilation in accordance with the requirements of (1) of this section or employees shall be protected by air line respirators in accordance with the requirements of chapter 296-62 WAC, Part E.

(i) Metals containing lead, other than as an impurity, or metals coated with lead-bearing materials.

(ii) Cadmium-bearing or cadmium coated base metals.

(iii) Metals coated with mercury-bearing metals.

(iv) Beryllium-containing base or filler metals. Because of its high toxicity, work involving beryllium shall be done with both local exhaust ventilation and air line respirators.

(c) Employees performing such operations in the open air shall be protected by filter type respirators in accordance with the requirements of WAC 296-304-09003, except that employees performing such operations on beryllium-containing base or filler metals shall be protected by air line respirators in accordance with the requirements of chapter 296-62 WAC, Part E.

(d) Other employees exposed to the same atmosphere as the welders or burners shall be protected in the same manner as the welder or burner.

(4) Inert-gas metal-arc welding.

(a) Since the inert-gas metal-arc welding process involves the production of ultraviolet radiation of intensities of 5 to 30 times that produced during shielded metal-arc welding, the decomposition of chlorinated solvents by ultraviolet rays, and the liberation of toxic fumes and gases, employees shall not be permitted to engage in, or be exposed to the process until the following special precautions have been taken:

(i) The use of chlorinated solvents shall be kept at least two hundred feet from the exposed arc, and surfaces prepared with chlorinated solvents shall be thoroughly dry before welding is permitted on such surfaces.

(ii) Helpers and other employees in the area not protected from the arc by screening as provided in WAC 206-304-04011(5) shall be protected by filter lenses meeting the requirements of Tables I-1A and B (see below). When two or more welders are exposed to each other's arc, filter lens goggles of a suitable type meeting the requirements of WAC 296-304-09001 (1) and (3) shall be worn under welding helmets or hand shields to protect the welder against flashes and radiant energy when either the helmet is lifted or the shield is removed.

(iii) Welders and other employees who are exposed to radiation shall be suitably protected so that the skin is covered completely to prevent burns and other damage by ultraviolet rays. Welding helmets and hand shields shall be free of leaks and openings, and free of highly reflective surfaces.

(iv) When inert-gas metal-arc welding is being performed on stainless steel, the requirements of (3)(b) of this section shall be met to protect against dangerous concentrations of nitrogen dioxide.

(5) General welding, cutting and heating.

(a) Welding, cutting and heating not involving conditions or materials described in (2), (3) or (4) of this section may normally be done without mechanical ventilation or respiratory protective equipment, but where, because of unusual physical or atmospheric conditions, an unsafe accumulation of contaminants exists, suitable mechanical ventilation or respiratory protective equipment shall be provided.

(b) Employees performing any type of welding, cutting or heating shall be protected by suitable eye protective equipment in accordance with the requirements of Tables I-1A and B (see below).

(6) Residues and cargos of metallic ores.

Residues and cargos of metallic ores of toxic significance shall be removed from the area or protected from the heat before welding, cutting or heating is begun.

TABLE I-1A
FILTER LENSES FOR PROTECTION AGAINST RADIANT ENERGY

OPERATIONS	ELECTRODE SIZE 1/32 IN	ARC CURRENT	MINIMUM PROTECTIVE SHADE
Shielded metal arc welding	Less than 3	Less than 60	7
	3-5	60-160	8
	5-8	160-250	10
	More than 8	250-550	11
Gas metal arc welding and flux cored arc welding		Less than 60	7
		60-160	10
		160-250	10
		250-550	10
Gas Tungsten arc welding		Less than 50	8
		50-150	8
		150-500	10
Air carbon arc cutting	(Light)	Less than 500	10
	(Heavy)	500-1000	11

OPERATIONS	ELECTRODE SIZE 1/32 IN	ARC CURRENT	MINIMUM PROTECTIVE SHADE
Plasma arc welding		Less than 20	6
		20-100	8
		100-400	10
		400-800	11
Plasma arc cutting	(Light)**	Less than 300	8
	(Medium)**	300-400	9
	(Heavy)**	400-800	10
Torch brazing	—	—	3
Torch soldering	—	—	2
Carbon Arc welding	—	—	14

**These values apply where the actual arc is clearly seen. Lighter filters may be used when the arc is hidden by the workplace.

TABLE I-1B
FILTER LENSES FOR PROTECTION AGAINST RADIANT ENERGY

OPERATIONS	PLATE THICKNESS... INCHES	PLATE THICKNESS... MM	MINIMUM* PROTECTIVE SHADE
Gas welding			
Light	Under 1/8	Under 3.2	4
Medium	1/8 - 1/2	3.2 - 12.7	5
Heavy	Over 1/2	Over 12.7	6
Oxygen cutting			
Light	Under 1	Under 25	3
Medium	1 - 6	25 - 100	4
Heavy	Over 6	Over 150	5

*As rule of thumb, start with a shade that is too dark to see the weld zone. Then go to a lighter shade which gives sufficient view of the weld zone without going below the minimum. In oxyfuel gas welding or cutting where the torch produces a high yellow light, it is desirable to use a filter lens that absorbs the yellow or sodium line in the viable light of the (spectrum) operation.

[Statutory Authority: RCW 49.17.010, 49.17.040, 49.17.050, and 49.17.060. 03-04-099, § 296-304-04001, filed 2/4/03, effective 8/1/03. Statutory Authority: Chapter 49.17 RCW. 95-04-006, § 296-304-04001, filed 1/18/95, effective 3/10/95; 93-19-142 (Order 93-04), § 296-304-04001, filed 9/22/93, effective 11/1/93; Order 74-25, § 296-304-04001, filed 5/7/74.]

WAC 296-304-04003 Fire prevention. (1) When hot work is performed below decks or in other situations in which accidental fire would jeopardize the safety of employees, the following precautions shall be taken.

(2) When practical, objects to be welded, cut or heated shall be moved to a designated safe location or, if the object to be welded, cut or heated cannot be readily moved, all movable fire hazards including residues of combustible bulk cargos in the vicinity shall be taken to a safe place.

(3) If the object to be welded, cut or heated cannot be moved and if all the fire hazards including combustible cargos cannot be removed, positive means shall be taken to confine the heat, sparks, and slag, and to protect the immovable fire hazards from them.

(4) No welding, cutting or heating shall be done where the application of flammable paints or the presence of other flammable compounds or of heavy dust concentrations creates a hazard.

(5) Suitable fire extinguishing equipment shall be immediately available in the work area and shall be maintained in a state of readiness for instant use. In addition, when hot work is being performed aboard a vessel and pressure is not available on the vessel's fire system, an auxiliary supply of water shall be made available where practicable, consistent with avoiding freezing of the lines or hose.

(6) When the welding, cutting, or heating operation is such that normal fire prevention precautions are not sufficient, additional personnel shall be assigned to guard against fire while the actual welding, cutting, or heating operation is being performed and for a sufficient period of time after completion of the work to insure that no possibility of fire exists. Such personnel shall be instructed as to the specific anticipated fire hazards and how the fire fighting equipment provided is to be used.

(7) When welding, cutting or heating is performed on tank shells, decks, overheads and bulkheads, since direct penetration of sparks or heat transfer may introduce a fire hazard to an adjacent compartment, the same precautions shall be taken on the opposite side as are taken on the side on which the welding is being performed.

(8) In order to eliminate the possibility of fire in enclosed spaces as a result of gas escaping through leaking or improperly closed torch valves, the gas supply to the torch shall be positively shut off at some point outside the enclosed space whenever the torch is not to be used or whenever the torch is left unattended for a substantial period of time, such as during the lunch hour. Overnight and at the change of shifts the torch and hose shall be removed from the confined space. Open end fuel gas and oxygen hoses shall be immediately removed from enclosed spaces when they are disconnected from the torch or other gas consuming device.

(9) Vaporizing liquid extinguishers shall not be used in enclosed spaces.

(10) Except when the contents are being removed or transferred, drums, pails, and other containers which contain or have contained flammable liquids shall be kept closed. Empty containers shall be removed to a safe area apart from hot work operations, or open flames.

[Order 76-7, § 296-304-04003, filed 3/1/76; Order 74-25, § 296-304-04003, filed 5/7/74.]

WAC 296-304-04005 Welding, cutting and heating in way of preservative coatings. (1) Before welding, cutting or heating is commenced on any surface covered by a preservative coating whose flammability is not known, a test shall be made by a competent person to determine its flammability. Preservative coatings shall be considered to be highly flammable when scrapings burn with extreme rapidity.

(2) Precautions shall be taken to prevent ignition of highly flammable hardened preservative coatings. When coatings are determined to be highly flammable they shall be stripped from the area to be heated to prevent ignition. A 1 1/2-inch or larger fire hose with fog nozzle, which has been uncoiled and placed under pressure, shall be immediately available for instant use in the immediate vicinity, consistent with avoiding freezing of the hose.

(3) Protection against toxic preservative coatings.

(a) In enclosed spaces all surfaces covered with toxic preservatives shall be stripped of all toxic coatings for a distance of at least 4 inches from the area of heat application or the employees shall be protected by air line respirators meeting the requirements of chapter 296-62 WAC, Part E.

(b) In the open air employees shall be protected by a filter type respirator in accordance with the requirements of chapter 296-62 WAC, Part E.

(4) Before welding, cutting or heating is commenced in enclosed spaces on metals covered by soft and greasy preservatives, the following precautions shall be taken:

(a) A competent person shall test the atmosphere in the space to ensure that it does not contain explosive vapors, since there is a possibility that some soft and greasy preservatives may have flash points below temperatures which may be expected to occur naturally. If such vapors are determined to be present, no hot work shall be commenced until such precautions have been taken as will ensure that the welding, cutting or heating can be performed in safety.

(b) The preservative coatings shall be removed for a sufficient distance from the area to be heated to ensure that the temperature of the unstripped metal will not be appreciably raised. Artificial cooling of the metal surrounding the heated area may be used to limit the size of the area required to be cleaned. The prohibition contained in WAC 296-304-03005 (2)(b) shall apply.

(5) Immediately after welding, cutting or heating is commenced in enclosed spaces on metal covered by soft and greasy preservatives, and at frequent intervals thereafter, a competent person shall make tests to ensure that no flammable vapors are being produced by the coatings. If such vapors are determined to be present, the operation shall be stopped immediately and shall not be resumed until such additional precautions have been taken as are necessary to ensure that the operation can be resumed safely.

[Statutory Authority: Chapter 49.17 RCW. 95-04-006, § 296-304-04005, filed 1/18/95, effective 3/10/95; 93-19-142 (Order 93-04), § 296-304-04005, filed 9/22/93, effective 11/1/93; Order 74-25, § 296-304-04005, filed 5/7/74.]

WAC 296-304-04007 Welding, cutting and heating of hollow metal containers and structures not covered by WAC 296-304-02003. (1) Drums, containers, or hollow structures which have contained toxic or flammable substances shall, before welding, cutting, or heating is undertaken on them, either be filled with water or thoroughly cleaned of such substances and ventilated and tested.

(2) Before heat is applied to a drum, container, or hollow structure, a vent or opening shall be provided for the release of any built-up pressure during the application of heat.

(3) Before welding, cutting, heating or brazing is begun on structural voids such as skegs, bilge keels, fair waters, masts, booms, support stanchions, pipe stanchions or railings, a competent person shall inspect the object and, if necessary, test it for the presence of flammable liquids or vapors. If flammable liquids or vapors are present, the object shall be made safe.

(4) Objects such as those listed in (3) of this section shall also be inspected to determine whether water or other nonflammable liquids are present which, when heated, would build up excessive pressure. If such liquids are determined to be present, the object shall be vented, cooled, or otherwise made safe during the application of heat.

(5) Jacketed vessels shall be vented before and during welding, cutting or heating operations in order to release any pressure which may build up during the application of heat.

[Order 76-7, § 296-304-04007, filed 3/1/76; Order 74-25, § 296-304-04007, filed 5/7/74.]

WAC 296-304-04009 Gas welding and cutting. (1) Transporting, moving and storing compressed gas cylinders.

(a) Valve protection caps shall be in place and secure. Oil shall not be used to lubricate protection caps.

(b) When cylinders are hoisted, they shall be secured on a cradle, slingboard or pallet. They shall not be hoisted by means of magnets or choker slings.

(c) Cylinders shall be moved by tilting and rolling them on their bottom edges. They shall not be intentionally dropped, struck, or permitted to strike each other violently.

(d) When cylinders are transported by vehicle, they shall be secured in position.

(e) Valve protection caps shall not be used for lifting cylinders from one vertical position to another. Bars shall not be used under valves or valve protection caps to pry cylinders loose when frozen. Warm, not boiling, water shall be used to thaw cylinders loose.

(f) Unless cylinders are firmly secured on a special carrier intended for this purpose, regulators shall be removed and valve protection caps put in place before cylinders are moved.

(g) A suitable cylinder truck, chain, or other steadying device shall be used to keep cylinders from being knocked over while in use.

(h) When work is finished, when cylinders are empty or when cylinders are moved at any time, the cylinder valves shall be closed.

(i) Acetylene cylinders shall be secured in an upright position at all times except, if necessary, for short periods of time while cylinders are actually being hoisted or carried.

(2) Placing cylinders.

(a) Cylinders shall be kept far enough away from the actual welding or cutting operation so that sparks, hot slag or flame will not reach them. When this is impractical, fire resistant shields shall be provided.

(b) Cylinders shall be placed where they cannot become part of an electrical circuit. Electrodes shall not be struck against a cylinder to strike an arc.

(c) Fuel gas cylinders shall be placed with valve end up whenever they are in use. They shall not be placed in a location where they would be subject to open flame, hot metal, or other sources of artificial heat.

(d) Cylinders containing oxygen or acetylene or other fuel gas shall not be taken into confined spaces.

(3) Treatment of cylinders.

(a) Cylinders, whether full or empty, shall not be used as rollers or supports.

(b) No person other than the gas supplier shall attempt to mix gases in a cylinder. No one except the owner of the cylinder or person authorized by him shall refill a cylinder. No one shall use a cylinder's contents for purposes other than those intended by the supplier. Only cylinders bearing Interstate Commerce Commission identification and inspection markings shall be used.

(c) No damaged or defective cylinder shall be used.

(4) Use of fuel gas. The employer shall thoroughly instruct employees in the safe use of fuel gas, as follows:

(a) Before connecting a regulator to a cylinder valve, the valve shall be opened slightly and closed immediately. (This action is generally termed "cracking" and is intended to clear the valve of dust or dirt that might otherwise enter the regulator.) The person cracking the valve shall stand to one side of the outlet, not in front of it. The valve of a fuel gas cylinder shall not be cracked where the gas would reach welding work, sparks, flame or other possible sources of ignition.

(b) The cylinder valve shall always be opened slowly to prevent damage to the regulator. To permit quick closing, valves on fuel gas cylinders shall not be opened more than 1 1/2 turns. When a special wrench is required, it shall be left in position on the stem of the valve while the cylinder is in use so that the fuel gas flow can be shut off quickly in case of emergency. In the case of a manifolded or coupled cylinders, at least one such wrench shall always be available for immediate use. Nothing shall be placed on top of a fuel gas cylinder, when in use, which may damage the safety device or interfere with the quick closing of the valve.

(c) Fuel gas shall not be used from cylinders through torches or other devices which are equipped with shut-off valves without reducing the pressure through a suitable regulator attached to the cylinder valve or manifold.

(d) Before a regulator is removed from a cylinder valve, the cylinder valve shall always be closed and the gas released from the regulator.

(e) If, when the valve on a fuel gas cylinder is opened, there is found to be a leak around the valve stem, the valve shall be closed and the gland nut tightened. If this action does not stop the leak, the use of the cylinder shall be discontinued, and it shall be properly tagged and removed from the vessel. In the event that fuel gas should leak from the cylinder valve rather than from the valve stem and the gas cannot be shut off, the cylinder shall be properly tagged and removed from the vessel. If a regulator attached to a cylinder valve will effectively stop a leak through the valve seat the cylinder need not be removed from the vessel.

(f) If a leak should develop at a fuse plug or other safety device, the cylinder shall be removed from the vessel.

(5) Fuel gas and oxygen manifolds.

(a) Fuel gas and oxygen manifolds shall bear the name of the substance they contain in letters at least one (1) inch high which shall be either painted on the manifold or on a sign permanently attached to it.

(b) Fuel gas and oxygen manifolds shall be placed in safe and accessible locations in the open air. They shall not be located within enclosed spaces.

(c) Manifold hose connections, including both ends of the supply hose that lead to the manifold, shall be such that the hose cannot be interchanged between fuel gas and oxygen manifolds and supply header connections. Adapters shall not be used to permit the interchange of hose. Hose connections shall be kept free of grease and oil.

(d) When not in use, manifold and header hose connections shall be capped.

(e) Nothing shall be placed on top of a manifold, when in use, which will damage the manifold or interfere with the quick closing of the valves.

(6) Hose.

(a) Fuel gas hose and oxygen hose shall be easily distinguishable from each other. The contrast may be made by different colors or by surface characteristics readily distinguishable by the sense of touch. Oxygen and fuel gas hoses shall not be interchangeable. A single hose having more than one gas passage, a wall failure of which would permit the flow of one gas into the other gas passage, shall not be used.

(b) When parallel sections of oxygen and fuel gas hose are taped together, not more than 4 inches out of 8 inches shall be covered by tape.

(c) All hose carrying acetylene, oxygen, natural or manufactured fuel gas, or any gas or substance which may ignite or enter into combustion or be in any way harmful to employees, shall be inspected at the beginning of each shift. Defective hose shall be removed from service.

(d) Hose which has been subjected to flashback or which shows evidence of severe wear or damage shall be tested to twice the normal pressure to which it is subject, but in no case less than two hundred psi. Defective hose or hose in doubtful condition shall not be used.

(e) Hose couplings shall be of the type that cannot be unlocked or disconnected by means of a straight pull without rotary motion.

(f) Boxes used for the stowage of gas hose shall be ventilated.

(7) Torches.

(a) Clogged torch tip openings shall be cleaned with suitable cleaning wires, drills or other devices designed for such purpose.

(b) Torches shall be inspected at the beginning of each shift for leaking shut-off valves, hose couplings, and tip connections. Defective torches shall not be used.

(c) Torches shall be lighted by friction lighters or other approved devices, and not by matches or from hot work.

(8) Pressure regulators. Oxygen and fuel gas pressure regulators including their related gauges shall be in proper working order while in use.

[Order 74-25, § 296-304-04009, filed 5/7/74.]

WAC 296-304-04011 Arc welding and cutting. (1) Manual electrode holders.

(a) Only manual electrode holders which are specifically designed for arc welding and cutting and are of a capacity capable of safely handling the maximum rated current required by the electrodes shall be used.

(b) Any current carrying parts passing through the portion of the holder which the arc welder or cutter grips in his hand, and the outer surfaces of the jaws of the holder, shall be fully insulated against the maximum voltage encountered to ground.

(2) Welding cables and connectors.

(a) All arc welding and cutting cables shall be of the completely insulated, flexible type, capable of handling the maximum current requirements of the work in progress, taking into account the duty cycle under which the arc welder or cutter is working.

(b) Only cable free from repair or splices for a minimum distance of ten feet from the cable end to which the electrode holder is connected shall be used, except that cables with standard insulated connectors or with splices whose insulating quality is equal to that of the cable are permitted.

(c) When it becomes necessary to connect or splice lengths of cable one to another, substantial insulated connectors of a capacity at least equivalent to that of the cable shall be used. If connections are effected by means of cable lugs, they shall be securely fastened together to give good electrical contact, and the exposed metal parts of the lugs shall be completely insulated.

(d) Cables in poor repair shall not be used. When a cable, other than the cable lead referred to in (b), becomes worn to the extent of exposing bare conductors, the portion thus exposed shall be protected by means of rubber and friction tapes or other equivalent insulation.

(3) Ground returns and machine grounding.

(a) A ground return cable shall have a safe current carrying capacity equal to or exceeding the specified maximum output capacity of the arc welding or cutting unit which it services. When a single ground return cable services more than one unit, its safe current carrying capacity shall equal or exceed the total specified maximum output capacities of all the units which it services.

(b) Structures or pipe lines, except pipelines containing gases or flammable liquids or conduits containing electrical circuits, may be used as part of the ground return circuit, provided that the pipe or structure has a current carrying capacity equal to that required by (2).

(c) When a structure or pipe line is employed as a ground return circuit, it shall be determined that the required electrical contact exists at all joints. The generation of an arc, sparks or heat at any point shall cause rejection of the structure as a ground circuit.

(d) When a structure or pipe line is continuously employed as a ground return circuit, all joints shall be bonded, and periodic inspections shall be conducted to ensure that no condition of electrolysis or fire hazard exists by virtue of such use.

(e) The frames of all arc welding and cutting machines shall be grounded either through a third wire in the cable containing the circuit conductor or through a separate wire which is grounded at the source of the current. Grounding circuits, other than by means of the vessel's structure, shall be checked to ensure that the circuit between the ground and the grounded power conductor has resistance low enough to permit sufficient current to flow to cause the fuse or circuit breaker to interrupt the current.

(f) All ground connections shall be inspected to ensure that they are mechanically strong and electrically adequate for the required current.

(4) Operating instructions. Employers shall instruct employees in the safe means of arc welding and cutting as follows:

(a) When electrode holders are to be left unattended, the electrodes shall be removed and the holders shall be so placed or protected that they cannot make electrical contact with employees or conducting objects.

(b) Hot electrode holders shall not be dipped in water, since to do so may expose the arc welder or cutter to electric shock.

(c) When the arc welder or cutter has occasion to leave his work or to stop work for any appreciable length of time, or when the arc welding or cutting machine is to be moved, the power supply switch to the equipment shall be opened.

(d) Any faulty or defective equipment shall be reported to the supervisor.

(5) Shielding. Whenever practicable, all arc welding and cutting operations shall be shielded by noncombustible or flame-proof screens which will protect employees and other persons working in the vicinity from the direct rays of the arc.

[Order 74-25, § 296-304-04011, filed 5/7/74.]

WAC 296-304-04013 Uses of fissionable material in ship-breaking, shipbuilding and ship repairing. (1) In ship-breaking, shipbuilding and ship repairing and related activities involving the use of and exposure to sources of ionizing radiation not only on conventionally powered but also on nuclear powered vessels, the applicable provisions of the Atomic Energy Commission's Standards for Protection Against Radiation (10 CFR Part 20), relating to protection against occupational radiation exposure, shall apply.

(2) Any activity which involves the use of radioactive material, whether or not under license from the Atomic Energy Commission, shall be performed by competent persons specially trained in the proper and safe operation of such equipment. In the case of materials used under commission license, only persons actually licensed, or competent persons under direction and supervision of the licensee, shall perform such work.

[Order 76-7, § 296-304-04013, filed 3/1/76; Order 74-25, § 296-304-04013, filed 5/7/74.]

WAC 296-304-050 Scaffolds, ladders and other working surfaces—Scope and application. All sections of this chapter which include WAC 296-304-050 in the section number apply to scaffolds, ladders and other working surfaces.

[Order 74-25, § 296-304-050, filed 5/7/74.]

WAC 296-304-05001 Scaffolds or staging. (1) General requirements.

(a) All scaffolds and their supports whether of lumber, steel or other material, shall be capable of supporting the load they are designed to carry with a safety factor of not less than four.

(b) All lumber used in the construction of scaffolds shall be spruce, fir, long leaf yellow pine, Oregon pine or wood of equal strength. The use of hemlock, short leaf yellow pine, or short fiber lumber is prohibited.

(c) Lumber dimensions as given are nominal except where given in fractions of an inch.

(d) All lumber used in the construction of scaffolds shall be sound, straight-grained, free from cross grain, shakes and large, loose or dead knots. It shall also be free from dry rot, large checks, worm holes or other defects which impair its strength or durability.

(e) Scaffolds shall be maintained in a safe and secure condition. Any component of the scaffold which is broken, burned or otherwise defective shall be replaced.

(f) Barrels, boxes, cans, loose bricks, or other unstable objects shall not be used as working platforms or for the support of planking intended as scaffolds or working platforms.

(g) No scaffold shall be erected, moved, dismantled or altered except under the supervision of competent persons.

(h) No welding, burning, riveting or open flame work shall be performed on any staging suspended by means of fiber rope.

(i) Lifting bridles on working platforms suspended from cranes shall consist of four legs so attached that the stability of the platform is assured.

(j) Unless the crane hook has a safety latch or is moused, the lifting bridles on working platforms suspended from cranes shall be attached by shackles to the lower lifting block or other positive means shall be taken to prevent them from becoming accidentally disengaged from the crane hook.

(2) Independent pole wood scaffolds.

(a) All pole uprights shall be set plumb. Poles shall rest on a foundation of sufficient size and strength to distribute the load and to prevent displacement.

(b) In light-duty scaffolds not more than 24 feet in height, poles may be spliced by overlapping the ends not less than 4 feet and securely nailing them together. A substantial cleat shall be nailed to the lower section to form a support for the upper section except when bolted connections are used.

(c) All other poles to be spliced shall be squared at the ends of each splice, abutted, and rigidly fastened together by not less than two cleats securely nailed or bolted thereto. Each cleat shall overlap each pole end by at least 24 inches and shall have a width equal to the face of the pole to which it is attached. The combined cross sectional area of the cleats shall be not less than the cross sectional area of the pole.

(d) Ledgers shall extend over two consecutive pole spaces and shall overlap the poles at each end by not less than 4 inches. They shall be left in position to brace the poles as the platform is raised with the progress of the work. Ledgers shall be level and shall be securely nailed or bolted to each pole and shall be placed against the inside face of each pole.

(e) All bearers shall be set with their greater dimension vertical and shall extend beyond the ledgers upon which they rest.

(f) Diagonal bracing shall be provided between the parallel poles, and cross bracing shall be provided between the inner and outer poles or from the outer poles to the ground.

(g) Minimum dimensions and spacing of members shall be in accordance with Table E-1 in WAC 296-304-07011.

(h) Platform planking shall be in accordance with the requirements of (8) of this section.

(i) Backrails and toeboards shall be in accordance with the requirements of (9) of this section.

(3) Independent pole metal scaffolds.

(a) Metal scaffold members shall be maintained in good repair and free of corrosion.

(b) All vertical and horizontal members shall be fastened together with a coupler or locking device which will form a positive connection. The locking device shall be of a type which has no loose parts.

(c) Posts shall be kept plumb during erection and the scaffold shall be subsequently kept plumb and rigid by means of adequate bracing.

(d) Posts shall be fitted with bases supported on a firm foundation to distribute the load. When wooden sills are used, the bases shall be fastened thereto.

(e) Bearers shall be located at each set of posts, at each level, and at each intermediate level where working platforms are installed.

(f) Tubular bracing shall be applied both lengthwise and crosswise as required.

(g) Platform planking shall be in accordance with the requirements of (8) of this section.

(h) Backrails and toeboards shall be in accordance with the requirements of (9) of this section.

(4) Wood trestle and extension trestle ladders.

(a) The use of trestle ladders, or extension sections or base sections of extension trestle ladders longer than 20 feet is prohibited. The total height of base and extension may, however, be more than 20 feet.

(b) The minimum dimensions of the side rails of the trestle ladder, or the base sections of the extension trestle ladder, shall be as follows:

(i) Ladders up to and including those 16 feet long shall have side rails of not less than 1 5/16 x 2 3/4 inch lumber.

(ii) Ladders over 16 feet long and up to and including those 20 feet long shall have side rails of not less than 1 5/16 x 3 inch lumber.

(c) The side rails of the extension section of the extension trestle ladder shall be parallel and shall have minimum dimensions as follows:

(i) Ladders up to and including 12 feet long shall have side rails of not less than 1 5/16 x 2 1/4 inch lumber.

(ii) Ladders over 12 feet long and up to and including those 16 feet long shall have side rails of not less than 1 5/16 x 2 1/2 inch lumber.

(iii) Ladders over 16 feet long and up to and including those 20 feet long shall have side rails of not less than 1 5/16 x 3 inch lumber. (Rev. 2-17-76)

(d) Trestle ladders and base sections of extension trestle ladders shall be so spread that when in an open position the spread of the trestle at the bottom, inside to inside, shall be not less than 5 1/2 inches per foot of the length of the ladder.

(e) The width between the side rails at the bottom of the trestle ladder or of the base section of the extension trestle ladder shall be not less than 21 inches for all ladders and sections 6 feet or less in length. For longer lengths of ladder the width shall be increased at least 1 inch for each additional foot of length. The width between the side rails of the extension section of the trestle ladder shall be not less than 12 inches.

(f) In order to limit spreading, the top ends of the side rails of both the trestle ladder and of the base section of the extension trestle ladder shall be beveled, or of equivalent construction, and shall be provided with a metal hinge.

(g) A metal spreader or locking device to hold the front and back sections in an open position, and to hold the extension section securely in the elevated position, shall be a component of each trestle ladder or extension trestle ladder.

(h) Rungs shall be parallel and level. On the trestle ladder, or on the base section of the extension trestle ladder, rungs shall be spaced not less than 8 inches nor more than 18 inches apart; on the extension section of the extension trestle ladder, rungs shall be spaced not less than 6 inches nor more than 12 inches apart.

(i) Platform planking shall be in accordance with the requirements of (8) of this section, except that the width of the platform planking shall not exceed the distance between the side rails.

(j) Backrails and toeboards shall be in accordance with the requirements of (9) of this section.

(5) Painters' suspended scaffolds.

(a) The supporting hooks of swinging scaffolds shall be constructed to be equivalent in strength to mild steel or wrought iron, shall be forged with care, shall be not less than 7/8 inch in diameter, and shall be secured to a safe anchorage at all times.

(b) The ropes supporting a swinging scaffold shall be equivalent in strength to first-grade 3/4 inch diameter manila rope properly rigged into a set of standard 6 inch blocks consisting of at least one double and one single block.

(c) Manila and wire ropes shall be carefully examined before each operation and thereafter as frequently as may be necessary to ensure their safe condition.

(d) Each end of the scaffold platform shall be supported by a wrought iron or mild steel stirrup or hanger, which in turn is supported by the suspension ropes.

(e) Stirrups shall be constructed so as to be equivalent in strength to wrought iron 3/4 inch in diameter.

(f) The stirrups shall be formed with a horizontal bottom member to support the platform, shall be provided with means to support the guardrail and midrail and shall have a loop or eye at the top for securing the supporting hook on the block.

(g) Two or more swinging scaffolds shall not at any time be combined into one by bridging the distance between them with planks or any other form of platform.

(h) No more than two persons shall be permitted to work at one time on a swinging scaffold built to the minimum specifications contained in this section. Where heavier construction is used, the number of persons permitted to work on the scaffold shall be determined by the size and the safe working load of the scaffold.

(i) Backrails and toeboards shall be in accordance with the requirements of (9) of this section.

(j) The swinging scaffold platform shall be one of the three types described in (k), (l), and (m) of this section.

(k) The ladder-type platform consists of boards upon a horizontal ladder-like structure, referred to herein as the ladder, the side rails of which are parallel. If this type of platform is used the following requirements shall be met:

(i) The width between the side rails shall be no more than 20 inches.

(ii) The side rails of ladders in ladder-type platforms shall be equivalent in strength to a beam of clear straight-grained spruce of the dimensions contained in Table E-2 in WAC 296-304-07011.

(iii) The side rails shall be tied together with tie rods. The tie rods shall be not less than 5/16 inch in diameter, located no more than 5 feet apart, pass through the rails, and be riveted up tight against washers at both ends.

(iv) The rungs shall be of straight-grained oak, ash, or hickory, not less than 1 1/8 inches diameter, with 7/8 inch tenons mortised into the side rails not less than 7/8 inch and shall be spaced no more than 18 inches on centers.

(v) Flooring strips shall be spaced no more than 5/8 inch apart except at the side rails, where 1 inch spacing is permissible.

(vi) Flooring strips shall be cleated on their undersides.

(l) The plank-type platform consists of planks supported on the stirrups or hangers. If this type of platform is used, the following requirements shall be met:

(i) The planks of plank-type platforms shall be not less than 2 x 10 inch lumber.

(ii) The platform shall be no more than 24 inches in width.

(iii) The planks shall be tied together by cleats of not less than 1 x 6 inch lumber, nailed on their undersides at intervals of not more than 4 feet.

(iv) The planks shall extend not less than 6 inches nor more than 18 inches beyond the supporting stirrups.

(v) A cleat shall be nailed across the platform on the underside at each end outside the stirrup to prevent the platform from slipping off the stirrup.

(vi) Stirrup supports shall be not more than 10 feet apart.

(m) The beam-type platform consists of longitudinal side stringers with cross beams set on edge and spaced not more than 4 feet apart on which longitudinal platform planks are laid. If this type platform is used the following requirements shall be met:

(i) The side stringers shall be of sound, straight-grained lumber, free from knots, and of not less than 2 x 6 inch lumber, set on edge.

(ii) The stringers shall be supported on the stirrups with a clear span between stirrups of not more than 16 feet.

(iii) The stringers shall be bolted to the stirrups by U-bolts passing around the stirrups and bolted through the stringers with nuts drawn up tight on the inside face.

(iv) The ends of the stringers shall extend beyond the stirrups not less than 6 inches nor more than 12 inches at each end of the platform.

(v) The platform shall be supported on cross beams of 2 x 6 inch lumber between the side stringers securely nailed thereto and spaced not more than 4 feet on centers.

(vi) The platform shall be not more than 24 inches wide.

(vii) The platform shall be formed of boards 7/8 inch in thickness by not less than 6 inches in width, nailed tightly together, and extending to the outside face of the stringers.

(viii) The ends of all platform boards shall rest on the top of the cross beams, shall be securely nailed, and at no intermediate points in the length of the platform shall there by any cantilever ends.

(6) Horse scaffolds.

(a) The minimum dimensions of lumber used in the construction of horses shall be in accordance with Table E-3 in WAC 296-304-07011.

(b) Horses constructed of materials other than lumber shall provide the strength, rigidity and security required of horses constructed of lumber.

(c) The lateral spread of the legs shall be equal to not less than one-third of the height of the horse.

(d) All horses shall be kept in good repair, and shall be properly secured when used in staging or in locations where they may be insecure.

(e) Platform planking shall be in accordance with the requirements of (8) of this section.

(f) Backrails and toeboards shall be in accordance with (9) of this section.

(7) Other types of scaffolds.

(a) Scaffolds of a type for which specifications are not contained in this section shall meet the general requirements of (1), (8) and (9) of this section, shall be in accordance with recognized principles of design and shall be constructed in accordance with accepted standards covering such equipment.

(8) Scaffold or platform planking.

(a) Except as otherwise provided in (5)(k) and (m), platform planking shall be of not less than 2 x 10 inch lumber. Platform planking shall be straight-grained and free from large or loose knots and may be either rough or dressed.

(b) Platforms of staging shall be not less than two 10 inch planks in width except in such cases as the structure of the vessel or the width of the trestle ladders make it impossible to provide such a width.

(c) Platform planking shall project beyond the supporting members at either end by at least 6 inches but in no case shall project more than 12 inches unless the planks are fastened to the supporting members.

(d) Table E-4 in WAC 296-304-07011 shall be used as a guide in determining safe loads for scaffold planks.

(9) Backrails and toeboards.

(a) Scaffolding, staging, runways, or working platforms which are supported or suspended more than 5 feet above a solid surface, or at any distance above the water, shall be provided with a railing which has a top rail whose upper surface is from 42 to 45 inches above the upper surface of the staging, platform, or runway and a midrail located halfway between the upper rail and the staging, platform, or runway.

(b) Rails shall be of 2 x 4 inch lumber, flat bar or pipe. When used with rigid supports, taut wire or fiber rope of adequate strength may be used. If the distance between supports is more than 8 feet, rails shall be equivalent in strength to 2 x 4 inch lumber. Rails shall be firmly secured. Where exposed to hot work or chemicals, fiber rope rails shall not be used.

(c) Rails may be omitted where the structure of the vessel prevents their use. When rails are omitted employees working more than 5 feet above solid surfaces shall be protected by safety belts and life lines meeting the requirements of WAC 296-304-09021(2), and employees working over water shall be protected by personal flotation devices meeting the requirements of WAC 296-304-09017(1).

(d) Employees working from swinging scaffolds which are triced out of a vertical line below their supports or from scaffolds on paint floats subject to surging, shall be protected against falling toward the vessel by a railing or a safety belt and line attached to the backrail.

(e) When necessary, to prevent tools and materials from falling on men below, toeboards of not less than 1 x 4 inch lumber shall be provided.

(10) Access to staging.

(a) Access from below to staging more than 5 feet above a floor, deck or the ground shall consist of well secured stairways, cleated ramps, fixed or portable ladders meeting the applicable requirements of WAC 296-304-05003 or rigid type noncollapsible trestles with parallel and level rungs.

(b) Ramps and stairways shall be provided with 36-inch handrails with midrails.

(c) Ladders shall be so located or other means shall be taken so that it is not necessary for employees to step more than one foot from the ladder to any intermediate landing or platform.

(d) Ladders forming integral parts of prefabricated staging are deemed to meet the requirements of these regulations.

(e) Access from above to staging more than 3 feet below the point of access shall consist of a straight, portable ladder meeting the applicable requirements of WAC 296-304-05003 or a Jacob's ladder properly secured, meeting the requirements of WAC 296-304-05007(4).

[Statutory Authority: RCW 49.17.010, 49.17.040, 49.17.050, and 49.17.060. 03-04-099, § 296-304-05001, filed 2/4/03, effective 8/1/03; Order 76-7, § 296-304-05001, filed 3/1/76; Order 74-25, § 296-304-05001, filed 5/7/74.]

WAC 296-304-05003 Ladders. (1) General requirements.

(a) The use of ladders with broken or missing rungs or steps, broken or split side rails, or other faulty or defective construction is prohibited. When ladders with such defects are discovered, they shall be immediately withdrawn from service. Inspection of metal ladders shall include checking for corrosion of interiors of open end, hollow rungs.

(b) When sections of ladders are spliced, the ends shall be abutted, and not fewer than 2 cleats shall be securely nailed or bolted to each rail. The combined cross sectional area of the cleats shall be not less than the cross sectional area of the side rail. The dimensions of side rails for their total length shall be those specified in (2) or (3) of this section.

(c) Portable ladders shall be lashed, blocked or otherwise secured to prevent their being displaced. The side rails of ladders used for access to any level shall extend not less than 36 inches above that level. When this is not practical, grab rails which will provide a secure grip for an employee moving to or from the point of access shall be installed.

(d) Portable metal ladders shall be of strength equivalent to that of wood ladders. Manufactured portable metal ladders provided by the employer shall be in accordance with the provisions of the United States of America Standard Safety Code for Portable Metal Ladders, A14.2.

(e) Portable metal ladders shall not be used near electrical conductors nor for electric arc welding operations.

(f) Manufactured portable wood ladders provided by the employer shall be in accordance with the provisions of the United States of America Standard Safety Code for Portable Wood Ladders, A-14.

(2) Construction of portable wood cleated ladders up to 30 feet in length.

(a) Wood side rails shall be made from west coast hemlock, eastern spruce, Sitka spruce, or wood of equivalent strength. Material shall be seasoned, straight-grained wood, and free from shakes, checks, decay or other defects which will impair its strength. The use of low density woods is prohibited.

(b) Side rails shall be dressed on all sides, and kept free of splinters.

(c) All knots shall be sound and hard. The use of material containing loose knots is prohibited. Knots shall not appear on the narrow face of the rail and, when in the side face, shall be not more than 1/2 inch in diameter or within 1/2 inch of the edge of the rail or nearer than 3 inches to a tread or rung.

(d) Pitch pockets not exceeding 1/8 inch in width, 2 inches in length and 1/2 inch in depth are permissible in wood side rails, provided that not more than one such pocket appears in each 4 feet of length.

(e) The width between side rails at the base shall be not less than 11 1/2 inches for ladders 10 feet or less in length. For longer ladders this width shall be increased at least 1/4 inch for each additional 2 feet in length.

(f) Side rails shall be at least 1 5/8 x 3 5/8 inches in cross section.

(g) Cleats (meaning rungs rectangular in cross section with the wide dimension parallel to the rails) shall be of the material used for side rails, straight-grained and free from knots. Cleats shall be mortised into the edges of the side rails 1/2 inch, or filler blocks shall be used on the rails between the cleats. The cleats shall be secured to each rail with three 10d common wire nails or fastened with through bolts or other fasteners of equivalent strength. Cleats shall be uniformly spaced not more than 12 inches apart.

(h) Cleats 20 inches or less in length shall be at least 25/32 x 3 inches in cross section. Cleats over 20 inches but not more than 30 inches in length shall be at least 25/32 x 3 3/4 inches in cross section.

(3) Construction of portable wood cleated ladders from 30 to 60 feet in length.

(a) Ladders from 30 to 60 feet in length shall be in accordance with the specifications of (2) of this section with the following exceptions:

(i) Rails shall be of not less than 2 x 6 inch lumber.

(ii) Cleats shall be of not less than 1 x 4 inch lumber.

(iii) Cleats shall be nailed to each rail with five 10d common wire nails or fastened with through bolts or other fastenings of equivalent strength.

[Statutory Authority: RCW 49.17.010, 49.17.040, 49.17.050, and 49.17.060. 03-04-099, § 296-304-05003, filed 2/4/03, effective 8/1/03; Order 74-25, § 296-304-05003, filed 5/7/74.]

WAC 296-304-05005 Guarding of deck openings and edges. (1) When employees are working in the vicinity of flush manholes and other small openings of comparable size in the deck and other working surfaces, such openings shall be suitably covered or guarded to a height of not less than 30 inches, except where the use of such guards is made impracticable by the work actually in progress.

(2) When employees are working around open hatches not protected by coamings to a height of 24 inches or around other large openings, the edge of the opening shall be guarded in the working area to a height of 36 to 42 inches, except where the use of such guards is made impracticable by the work actually in progress.

(3) When employees are exposed to unguarded edges of decks, platforms, flats, and similar flat surfaces, more than 5 feet above a solid surface, the edges shall be guarded by adequate guardrails meeting the requirements of WAC 296-304-05001 (1)(a) and (b), unless the nature of the work in progress or the physical conditions prohibit the use or installation of such guardrails.

(4) When employees are working near the unguarded edges of decks of vessels afloat, they shall be protected by buoyant personal flotation devices, meeting the requirements of WAC 296-304-09017(1).

(5) Sections of bilges from which floor plates or gratings have been removed shall be guarded by guardrails except where they would interfere with work in progress. If these open sections are in a walkway at least two 10-inch planks placed side by side, or equivalent, shall be laid across the opening to provide a safe walking surface.

(6) Gratings, walkways, and catwalks, from which sections or ladders have been removed, shall be barricaded with adequate guardrails.

[Statutory Authority: RCW 49.17.010, 49.17.040, 49.17.050, and 49.17.060. 03-04-099, § 296-304-05005, filed 2/4/03, effective 8/1/03; Order 74-25, § 296-304-05005, filed 5/7/74.]

WAC 296-304-05007 Access to vessels. "Barge" - An unpowered, flat bottom, shallow draft vessel including scows, carfloats and lighters, but not ship-shaped or deep-draft barges.

"River towboat" - A shallow draft, low free board, self-propelled vessel designed to tow river barges by pushing ahead.

(1) Access to vessels afloat. The employer shall not permit employees to board or leave any vessel, except a barge or river towboat, until the following requirements have been met:

(a) Whenever practicable, a gangway of not less than 20 inches walking surface, of adequate strength, maintained in safe repair and safely secured shall be used. If a gangway is not practicable, a substantial straight ladder, extending at least 36 inches above the upper landing surface and adequately secured against shifting or slipping shall be provided. When conditions are such that neither a gangway nor a straight ladder can be used, a Jacob's ladder meeting the requirements of (4)(a) and (b) of this section may be used.

(b) Each side of such gangway, and the turntable if used, shall have a railing with a minimum height of approximately 33 inches measured perpendicularly from rail to walking surface at the stanchion, with a midrail. Rails shall be of wood, pipe, chain, wire or rope and shall be kept taut at all times.

(c) Gangways on vessels inspected and certificated by the U.S. Coast Guard are deemed to meet the foregoing requirements, except in cases where the vessel's regular gangway is not being used.

(d) The gangway shall be kept properly trimmed at all times.

(e) When a fixed tread accommodation ladder is used, and the angle is low enough to require employees to walk on the edge of the treads, cleated duckboards shall be laid over and secured to the ladder.

(f) When the lower end of a gangway overhangs the water between the ship and the dock in such a manner that there is danger of employees falling between the ship and the dock, a net or other suitable protection shall be rigged at the foot of the gangway in such a manner as to prevent employees from falling from the end of the gangway.

(g) If the foot of the gangway is more than one foot away from the edge of the apron, the space between them shall be bridged by a firm walkway equipped with railings, with a minimum height of approximately 33 inches with midrails on both sides.

(h) Supporting bridles shall be kept clear so as to permit unobstructed passage for employees using the gangway.

(i) When the upper end of the means of access rests on or flush with the top of the bulwark, substantial steps properly secured and equipped with at least one substantial handrail approximately 33 inches in height shall be provided between the top of the bulwark and the deck.

(j) Obstructions shall not be laid on or across the gangway.

(k) The means of access shall be adequately illuminated for its full length.

(l) Unless the construction of the vessel makes it impossible, the means of access shall be so located that drafts of cargo do not pass over it. In any event loads shall not be passed over the means of access while employees are on it.

(2) Access to vessels in drydock or between vessels. Gangways meeting the requirements of (1)(a), (b), (i), (j) and (l) of this section shall be provided for access from wing wall to vessel or, when two or more vessels, other than barges or river towboats, are lying abreast, from one vessel to another.

(3) Access to barges and river towboats.

(a) Ramps for access of vehicles to or between barges shall be of adequate strength, provided with side boards, well maintained and properly secured.

(b) Unless employees can step safely to or from the wharf, float, barge, or river towboat, either a ramp in accordance with the requirements of (a) of this section or a safe walkway in accordance with the requirements of (1)(g) of this section shall be provided. When a walkway is impracticable, a substantial straight ladder, extending at least 36 inches above the upper landing surface and adequately secured against shifting or slipping shall be provided. When conditions are such that neither a walkway nor a straight ladder can be used, a Jacob's ladder in accordance with the requirements of (4) of this section may be used.

(c) The means of access shall be in accordance with the requirements of (1)(i), (j) and (k) of this section.

(4) Jacob's ladders.

(a) Jacob's ladders shall be of the double rung or flat tread type. They shall be well maintained and properly secured.

(b) A Jacob's ladder shall either hang without slack from its lashings or be pulled up entirely.

[Statutory Authority: RCW 49.17.040, [49.17].050 and [49.17].060. 98-02-006, § 296-304-05007, filed 12/26/97, effective 3/1/98; Order 74-25, § 296-304-05007, filed 5/7/74.]

WAC 296-304-05009 Access to and guarding of dry docks and marine railways. (1) A gangway, ramp or permanent stairway of not less than 20 inches walking surface, of adequate strength, maintained in safe repair and securely fastened, shall be provided between a floating dry dock and the pier or bulkhead.

(2) Each side of such gangway, ramp or permanent stairway, including those which are used for access to wing walls from dry dock floors, shall have a railing with a midrail. Such railings on gangways or ramps shall be approximately 42 inches in height; and railings on permanent stairways shall be not less than approximately 30 or more than approximately 34 inches in height. Rails shall be of wood, pipe, chain, wire, or rope and shall be kept taut at all times.

(3) Railings meeting the requirements of (2) of this section shall be provided on the means of access to and from the floors of graving docks.

(4) Railings approximately 42 inches in height, with a midrail, shall be provided on the edges of wing walls of floating dry docks and on the edges of graving docks. Sections of the railings may be temporarily removed where necessary to permit line handling while a vessel is entering or leaving the dock.

(5) When employees are working on the floor of a floating dry dock where they are exposed to the hazard of falling into the water, the end of the dry dock shall be equipped with portable stanchions and 42 inch railings with a midrail. When such a railing would be impracticable or ineffective, other effective means shall be provided to prevent employees from falling into the water.

(6) Access to wingwalls from floors of dry docks shall be by ramps, permanent stairways or ladders meeting the applicable requirements of WAC 296-304-05003.

(7) Catwalks on stiles of marine railways shall be no less than 20 inches wide and shall have on at least one side a guardrail and midrail meeting the requirements of WAC 296-304-05001 (9)(a) and (b).

[Statutory Authority: RCW 49.17.010, 49.17.040, 49.17.050, and 49.17.060. 03-04-099, § 296-304-05009, filed 2/4/03, effective 8/1/03; Order 74-25, § 296-304-05009, filed 5/7/74.]

WAC 296-304-05011 Access to cargo spaces and confined spaces. (1) Cargo spaces.

(a) There shall be at least one safe and accessible ladder in any cargo space which employees must enter.

(b) When any fixed ladder is visibly unsafe, the employer shall prohibit its use by employees.

(c) Straight ladders of adequate strength and suitably secured against shifting or slipping shall be provided as necessary when fixed ladders in cargo spaces do not meet the requirements of (a) of this section. When conditions are such that a straight ladder cannot be used, a Jacob's ladder meeting the requirements of WAC 296-304-05007(4) may be used.

(d) When cargo is stowed within 4 inches of the back of ladder rungs, the ladder shall be deemed "unsafe" for the purpose of this section.

(e) Fixed ladders or straight ladders provided for access to cargo spaces shall not be used at the same time that cargo drafts or other loads are entering or leaving the hold. Before using these ladders to enter or leave the hold, the employee shall be required to inform the winchman or crane signalman of his intention.

(2) Confined spaces.

(a) More than one means of access shall be provided to a confined space in which employees are working and in which the work may generate a hazardous atmosphere in the space except where the structure or arrangement of the vessel makes this provision impractical.

(b) When the ventilation ducts required by these regulations must pass through these means of access, the ducts shall be of such a type and so arranged as to permit free passage of an employee through at least two of these means of access.

[Order 74-25, § 296-304-05011, filed 5/7/74.]

WAC 296-304-05013 Working surfaces. (1) When firebox floors present tripping hazards of exposed tubing or of missing or removed refractory, sufficient planking to afford safe footing shall be laid while work is being carried on within the boiler.

(2) The employer must provide and ensure the use of fall protection when employees work aloft or elsewhere at elevations more than 5 feet above a solid surface.

(a) Employees must be protected by the use of scaffolds, ladders, or personal protection equipment according to WAC 296-304-09021, or 296-304-09023.

(b) Employees must work from scaffolds when visually restricted by:

• Blasting hoods;

• Welding helmets; and

• Burning goggles; except

• For the initial and final welding or burning operation to start or complete a job such as the erection and dismantling of hung scaffolding; or

• Other similar, nonrepetitive jobs of brief duration.

(3) For work performed in restricted quarters, such as behind boilers and in between congested machinery units and piping, work platforms at least 20 inches wide meeting the requirements of WAC 296-304-05001 (8)(b) shall be used. Backrails may be omitted if bulkheading, boilers, machinery units, or piping afford proper protection against falling.

(4) When employees are boarding, leaving, or working from small boats or floats, they shall be protected by personal flotation devices meeting the requirements of WAC 296-304-09017(1).

[Statutory Authority: RCW 49.17.010, 49.17.040, 49.17.050, and 49.17.060. 03-04-099, § 296-304-05013, filed 2/4/03, effective 8/1/03. Statutory Authority: RCW 49.17.040, [49.17].050 and [49.17].060. 98-02-006, § 296-304-05013, filed 12/26/97, effective 3/1/98; Order 76-7, § 296-304-05013, filed 3/1/76; Order 74-25, § 296-304-05013, filed 5/7/74.]

WAC 296-304-060 General working conditions—Scope and application. All sections of this chapter which include WAC 296-304-060 in the section number apply to general working conditions.

[Order 74-25, § 296-304-060, filed 5/7/74.]

WAC 296-304-06001 Housekeeping. (1) Good housekeeping conditions shall be maintained at all times. Adequate aisles and passageways shall be maintained in all work areas. All staging platforms, ramps, stairways, walkways, aisles, and passageways on vessels or dry docks shall be kept clear of all tools, materials, and equipment except that which is in use, and all debris such as welding rod tips, bolts, nuts, and similar material. Hose and electric conductors shall be elevated over or placed under the walkway or working surfaces or covered by adequate crossover planks.

(2) All working areas on vessels and dry docks shall be kept reasonably free of debris, and construction material shall be so piled as not to present a hazard to employees.

(3) Slippery conditions on walkways or working surfaces shall be eliminated as they occur.

(4) Free access shall be maintained at all times to all exits and to all fire-alarm boxes or fire-extinguishing equipment.

(5) All oils, paints, thinners, solvents waste, rags, or other flammable substances shall be kept in fire resistant covered containers when not in use.

[Order 74-25, § 296-304-06001, filed 5/7/74.]

WAC 296-304-06003 Illumination. (1) All means of access and walkways leading to working areas as well as the working areas themselves shall be adequately illuminated.

(2) Temporary lights shall meet the following requirements:

(a) Temporary lights shall be equipped with guards to prevent accidental contact with the bulb, except that guards are not required when the construction of the reflector is such that the bulb is deeply recessed.

(b) Temporary lights shall be equipped with heavy duty electric cords with connections and insulation maintained in safe condition. Temporary lights shall not be suspended by their electric cords unless cords and lights are designed for this means of suspension. Splices which have insulation equal to that of the cable are permitted.

(c) Cords shall be kept clear of working spaces and walkways or other locations in which they are readily exposed to damage.

(3) Exposed noncurrent-carrying metal parts of temporary lights furnished by the employer shall be grounded either through a third wire in the cable containing the circuit conductors or through a separate wire which is grounded at the source of the current. Grounding shall be in accordance with the requirements of WAC 296-304-08003(2).

(4) Where temporary lighting from sources outside the vessel is the only means of illumination, portable emergency lighting equipment shall be available to provide illumination for safe movement of employees.

(5) Employees shall not be permitted to enter dark spaces without a suitable portable light. The use of matches and open flame lights is prohibited. In nongas free spaces, portable lights shall meet the requirements of WAC 296-304-02005 (2)(i).

(6) Temporary lighting stringers or streamers shall be so arranged as to avoid overloading of branch circuits. Each branch circuit shall be equipped with overcurrent protection of capacity not exceeding the rated current carrying capacity of the cord used.

[Statutory Authority: RCW 49.17.010, 49.17.040, 49.17.050, and 49.17.060. 03-04-099, § 296-304-06003, filed 2/4/03, effective 8/1/03; Order 74-25, § 296-304-06003, filed 5/7/74.]

WAC 296-304-06005 Utilities. (1) Steam supply and hoses.

(a) Prior to supplying a vessel with steam from a source outside the vessel, the employer shall ascertain from responsible vessel's representatives, having knowledge of the condition of the plant, the safe working pressure of the vessel's steam system. The employer shall install a pressure gauge and a relief valve of proper size and capacity at the point where the temporary steam hose joins the vessel's steam piping system or systems. The relief valve shall be set and capable of relieving at a pressure not exceeding the safe working pressure of the vessel's system in its present condition, and there shall be no means of isolating the relief valve from the

system which it protects. The pressure gauge and relief valve shall be located so as to be visible and readily accessible.

(b) Steam hose and fittings shall have a safety factor of not less than five.

(c) When steam hose is hung in a bight or bights, the weight shall be relieved by appropriate lines. The hose shall be protected against chafing.

(d) Steam hose shall be protected from damage and hose and temporary piping shall be so shielded where passing through normal work areas as to prevent accidental contact by employees.

(2) Electric power.

(a) When the vessel is supplied with electric power from a source outside the vessel, the following precautions shall be taken prior to energizing the vessel's circuits:

(i) If in dry dock, the vessel shall be adequately grounded.

(ii) The employer shall ascertain from responsible vessel's representatives, having a knowledge of the condition of the vessel's electrical system, that all circuits to be energized are in a safe condition.

(iii) All circuits to be energized shall be equipped with overcurrent protection of capacity not exceeding the rated current carrying capacity of the cord used.

(3) Infrared electrical heat lamps.

(a) All infrared electrical heat lamps shall be equipped with guards that surround the lamps with the exception of the face, to minimize accidental contact with the lamps.

[Order 74-25, § 296-304-06005, filed 5/7/74.]

WAC 296-304-06007 Work in confined or isolated spaces. When any work is performed in a confined space, except as provided in WAC 296-304-04001 (2)(c), or when an employee is working alone in an isolated location, frequent checks shall be made to ensure the safety of the employees.

[Order 74-25, § 296-304-06007, filed 5/7/74.]

WAC 296-304-06009 Work on or in the vicinity of radar and radio. (1) No employees other than radar or radio repairmen shall be permitted to work on masts, king posts or other aloft areas unless the radar and radio are secured or otherwise made incapable of radiation. In either event, the radio and radar shall be appropriately tagged.

(2) Testing of radar or radio shall not be done until the employer can schedule such tests at a time when no work is in progress aloft or personnel can be cleared from the danger area according to minimum safe distances established for and based on the type, model, and power of the equipment.

[Order 74-25, § 296-304-06009, filed 5/7/74.]

WAC 296-304-06011 Work in or on lifeboats. (1) Before employees are permitted to work in or on a lifeboat, either stowed or in a suspended position, the employer shall ensure that the boat is secured independently of the releasing gear to prevent the boat from falling due to accidental tripping of the releasing gear and movement of the davits or capsizing of a boat in chocks.

(2) Employees shall not be permitted to remain in boats while the boats are being hoisted into final stowed position.

(3) Employees shall not be permitted to work on the outboard side of lifeboats stowed on their chocks unless the boats are secured by gripes or otherwise secured to prevent them from swinging outboard.

[Order 74-25, § 296-304-06011, filed 5/7/74.]

WAC 296-304-06013 Health and sanitation. "Hazardous material" - A material with one or more of the following characteristics:

• Has a flash point below 140°F, closed cup, or is subject to spontaneous heating;

• Has a threshold limit value below 500 p.p.m. in the case of a gas or vapor, below 500 mg./m.3 for fumes, and below 25 m.p.p.c.f. in case of a dust;

• Has a single dose oral LD50 below 500 mg./kg.;

• Is subject to polymerization with the release of large amounts of energy;

• Is a strong oxidizing or reducing agent;

• Causes first degree burns to skin in short time exposure, or is systematically toxic by skin contact; or

• In the course of normal operations, may produce dusts, gases, fumes, vapors, mists, or smokes that have one or more of the above characteristics.

(1) No chemical product, such as a solvent or preservative; no structural material, such as cadmium or zinc coated steel, or plastic material; and no process material, such as welding filler metal; which is a hazardous material may be used until the employer has ascertained the potential fire, toxic, or reactivity hazards which are likely to be encountered in the handling, application, or utilization of such a material.

(2) In order to ascertain the hazards, as required by subsection (1) of this section, the employer shall obtain the following items of information which are applicable to a specific product or material to be used:

(a) The name, address, and telephone number of the source of the information specified in this section preferably those of the manufacturer of the product or material.

(b) The trade name and synonyms for a mixture of chemicals, a basic structural material, or for a process material; and the chemical name and synonyms, chemical family, and formula for a single chemical.

(c) Chemical names of hazardous ingredients, including, but not limited to, those in mixtures, such as those in: (i) Paints, preservatives, and solvents; (ii) alloys, metallic coatings, filler metals and their coatings or core fluxes; and (iii) other liquids, solids, or gases (e.g., abrasive materials).

(d) An indication of the percentage, by weight or volume, which each ingredient of a mixture bears to the whole mixture, and of the threshold limit value of each ingredient, in appropriate units.

(e) Physical data about a single chemical or a mixture of chemicals, including boiling point, in degrees Fahrenheit; vapor pressure, in millimeters of mercury; vapor density of gas or vapor (air=1); solubility in water, in percent by weight; specific gravity of material (water=1); percentage volatile, by volume, at 70°F.; evaporation rate for liquids (either butyl acetate or ether may be taken as 1); and appearance and odor.

(f) Fire and explosion hazard data about a single chemical or a mixture of chemicals, including flashpoint, in degrees Fahrenheit; flammable limits, in percent by volume in air;

suitable extinguishing media or agents; special fire fighting procedures; and unusual fire and explosion hazard information.

(g) Health hazard data, including threshold limit value, in appropriate units, for a single hazardous chemical or for the individual hazardous ingredients of a mixture as appropriate, effects of overexposure; and emergency and first-aid procedures.

(h) Reactivity data, including stability, incompatibility, hazardous decomposition products, and hazardous polymerization.

(i) Procedures to be followed and precautions to be taken in cleaning up and disposing of materials leaked or spilled.

(j) Special protection information, including use of personal protective equipment, such as respirators, eye protection, and protective clothing, and of ventilation, such as local exhaust, general, special, or other types.

(k) Special precautionary information about handling and storing.

(l) Any other general precautionary information.

(3) The pertinent information required by subsection (2) of this section shall be recorded either on United States Department of Labor Form LSB 00S-4, Material Safety Data Sheet, or on an essentially similar form which has been approved by the department of labor and industries. Copies of Form LSB 00S-4 may be obtained at any of the following regional offices of the occupational safety and health administration:

(a) Pacific region. (Arizona, California, Hawaii, and Nevada.)

10353 Federal Building, 450 Golden Gate Avenue, Box 36017, San Francisco, Calif. 94102.

(b) Region X, OSHA, (Alaska, Washington, Idaho, and Oregon), Federal Office Building, 909 First Avenue, Seattle, Washington 98174.

A completed MSDS form shall be preserved and available for inspection for each hazardous chemical on the worksite.

(4) The employer shall instruct employees who will be exposed to the hazardous materials as to the nature of the hazards and the means of avoiding them.

(5) The employer shall provide all necessary controls, and the employees shall be protected by suitable personal protective equipment against the hazards identified under subsection (1) of this section and those hazards for which specific precautions are required in WAC 296-304-020 through 296-304-04013.

(6) The employer shall provide adequate washing facilities for employees engaged in the application of paints or coatings or in other operations where contaminants can, by ingestion or absorption, be detrimental to the health of the employees. The employer shall encourage good personal hygiene practices by informing the employees of the need for removing surface contaminants by thorough washing of hands and face prior to eating or smoking.

(7) The employer shall not permit eating or smoking in areas undergoing surface preparation or preservation or where shiprepairing, shipbuilding, or shipbreaking operations produce atmospheric contamination.

(8) The employer shall not permit employees to work in the immediate vicinity of uncovered garbage and shall ensure that employees working beneath or on the outboard side of a vessel are not subject to contamination by drainage or waste from overboard discharges.

(9) Requirements of WAC 296-800-170, Chemical hazard communication program, will apply to shiprepairing, shipbuilding, and shipbreaking when potential hazards of chemicals and communicating information concerning hazards and appropriate protective equipment is applicable to an operation.

[Statutory Authority: RCW 49.17.010, [49.17].040, and [49.17].050. 01-11-038, § 296-304-06013, filed 5/9/01, effective 9/1/01. Statutory Authority: RCW 49.17.040, [49.17].050 and [49.17].060. 98-02-006, § 296-304-06013, filed 12/26/97, effective 3/1/98. Statutory Authority: Chapter 49.17 RCW. 95-04-006, § 296-304-06013, filed 1/18/95, effective 3/10/95; 88-14-108 (Order 88-11), § 296-304-06013, filed 7/6/88; Order 76-7, § 296-304-06013, filed 3/1/76; Order 74-25, § 296-304-06013, filed 5/7/74.]

WAC 296-304-06015 First aid. (1) Unless a first-aid room and a qualified attendant are close at hand and prepared to render first aid to employees on behalf of the employer, the employer shall furnish a first-aid kit for each vessel on which work is being performed, except that when work is being performed on more than one small vessel at one pier, only one kit shall be required. The kit, when required, shall be kept close to the vessel and at least one employee, close, at hand, shall be qualified to administer first aid to the injured.

(2) The first-aid kit shall consist of a weatherproof container with individual sealed packages for each type of item. The contents of such kit shall contain a sufficient quantity of at least the following types of items:

Gauze roller bandages, 1 inch and 2 inch.
Gauze compress bandages, 4 inch.
Adhesive bandages, 1 inch.
Triangular bandage, 40 inch.
Ammonia inhalants and ampules.
Antiseptic applicators or swabs.
Burn dressing.
Eye dressing.
Wire or thin board splints.
Forceps and tourniquet.

(3) The contents of the first-aid kit shall be checked before being sent out on each job and at least weekly on each job to ensure that the expended items are replaced.

(4) There shall be available for each vessel on which ten or more employees are working one Stokes basket stretcher, or equivalent, permanently equipped with bridles for attaching to the hoisting gear, except that no more than two stretchers are required on each job location. A blanket or other liner suitable for transferring the patient to and from the stretcher shall be provided. Stretchers shall be kept close to the vessels. This section does not apply where ambulance services which are available are known to carry such stretchers.

[Order 74-25, § 296-304-06015, filed 5/7/74.]

WAC 296-304-070 Gear and equipment for rigging and materials handling—Scope and application. All sections of this chapter which include WAC 296-304-070 in the section number apply to gear and equipment for rigging and materials handling.

[Order 74-25, § 296-304-070, filed 5/7/74.]

WAC 296-304-07001 Inspection. (1) All gear and equipment provided by the employer for rigging and materials handling shall be inspected before each shift and, when necessary, at intervals during its use to ensure that is safe. Defective gear shall be removed and repaired or replaced before further use.

(2) The safe working load of gear as specified in WAC 296-304-07003 and 296-304-07005 shall not be exceeded.

[Order 74-25, § 296-304-07001, filed 5/7/74.]

WAC 296-304-07003 Ropes, chains and slings. (1) Manila rope and manila rope slings.

(a) Table G-1 in WAC 296-304-07011 shall be used to determine the safe working load of various sizes of manila rope and manila rope slings at various angles, except that higher safe working loads are permissible when recommended by the manufacturer for specific, identifiable products: Provided, That a safety factor of not less than five is maintained.

(2) Wire rope and wire rope slings.

(a) Tables G-2 through G-5 in WAC 296-304-07011 shall be used to determine the safe working loads of various sizes and classifications of improved plow steel wire rope and wire rope slings with various types of terminals. For sizes, classifications and grades not included in these tables, the safe working load recommended by the manufacturer for specific, identifiable products shall be followed: Provided, That a safety factor of not less than five is maintained.

(b) Protruding ends of strands in splices on slings and bridles shall be covered or blunted.

(c) Where U-bolt wire rope clips are used to form eyes, Table G-6 in WAC 296-304-07011 shall be used to determine the number and spacing of clips. The U-bolt shall be applied so that the "U" section is in contact with the dead end of the rope.

(d) Wire rope shall not be secured by knots.

(3) Chains and chain slings.

(a) Tables G-7 and G-8 in WAC 296-304-07011 shall be used to determine the working load limit of various sizes of wrought iron and alloy steel chains and chain slings, except that higher safe working loads are permissible when recommended by the manufacturer for specific, identifiable products.

(b) All sling chains, including end fastenings, shall be given a visual inspection before being used on the job. A thorough inspection of all chains in use shall be made every 3 months. Each chain shall bear an indication of the month in which it was thoroughly inspected. The thorough inspection shall include inspection for wear, defective welds, deformation and increase in length or stretch.

(c) Interlink wear, not accompanied by stretch in excess of 5 percent, shall be noted and the chain removed from service when maximum allowable wear at any point of link, as indicated in Table G-9 in WAC 296-304-07011 has been reached.

(d) Chain slings shall be removed from service when, due to stretch, the increase in length of a measured section exceeds five percent; when a link is bent, twisted or otherwise damaged; or when raised scarfs or defective welds appear.

(e) All repairs to chains shall be made under qualified supervision. Links or portions of the chain found to be defective as described in (d) of this section shall be replaced by links having proper dimensions and made of material similar to that of the chain. Before repaired chains are returned to service, they shall be proof tested to the proof test load recommended by the manufacturer.

(f) Wrought iron chains in constant use shall be annealed or normalized at intervals not exceeding six months when recommended by the manufacturer. The chain manufacturer shall be consulted for recommended procedures for annealing or normalizing. Alloy chains shall never be annealed.

(g) A load shall not be lifted with a chain having a kink or knot in it. A chain shall not be shortened by bolting, wiring or knotting.

[Order 76-7, § 296-304-07003, filed 3/1/76; Order 74-25, § 296-304-07003, filed 5/7/74.]

WAC 296-304-07005 Shackles and hooks. (1) Shackles.

(a) Table G-10 in WAC 296-304-07011 shall be used to determine the safe working loads of various sizes of shackles, except that higher safe working loads are permissible when recommended by the manufacturer for specific, identifiable products: Provided, That a safety factor of not less than five is maintained.

(2) Hooks.

(a) The manufacturer's recommendations shall be followed in determining the safe working loads of the various sizes and types of specific and identifiable hooks. All hooks for which no applicable manufacturer's recommendations are available shall be tested to twice the intended safe working load before they are initially put into use. The employer shall maintain a record of the dates and results of such tests.

(b) Loads shall be applied to the throat of the hook since loading the point overstresses and bends or springs the hook.

(c) Hooks shall be inspected periodically to see that they have not been bent by overloading. Bent or sprung hooks shall not be used.

[Order 76-7, § 296-304-07005, filed 3/1/76; Order 74-25, § 296-304-07005, filed 5/7/74.]

WAC 296-304-07007 Chain falls and pull-lifts. (1) Chain falls and pull-lifts shall be clearly marked to show the capacity and the capacity shall not be exceeded.

(2) Chain falls shall be regularly inspected to ensure that they are safe, particular attention being given to the lift chain, pinion, sheaves and hooks for distortion and wear. Pull-lifts shall be regularly inspected to ensure that they are safe, particular attention being given to the ratchet, pawl, chain and hooks for distortion and wear.

(3) Straps, shackles, and the beam or overhead structure to which a chain fall or pull-lift is secured shall be of adequate strength to support the weight of load plus gear. The upper hook shall be moused or otherwise secured against coming free of its support.

(4) Scaffolding shall not be used as a point of attachment for lifting devices, such as tackles, chain falls, and pull-lifts unless the scaffolding is specifically designed for that purpose.

[Order 74-25, § 296-304-07007, filed 5/7/74.]

WAC 296-304-07009 Hoisting and hauling equipment. (1) Derrick and crane certification:

(a) Derricks and cranes which are part of, or regularly placed aboard barges, other vessels, or on wingwalls of floating drydocks, and are used to transfer materials or equipment from or to a vessel or drydock, shall be tested and certificated in accordance with the standards provided in WAC 296-304-130 gear certification, by persons accredited for that purpose.

(b) Subsection (a) of this section shall take effect 180 days after the effective date of the amendment.

(2) The moving parts of hoisting and hauling equipment shall be guarded.

(3) Mobile crawler or truck cranes used on a vessel:

(a) The maximum manufacturer's rated safe working loads for the various working radii of the boom and the maximum and minimum radii at which the boom may be safely used with and without outriggers shall be conspicuously posted near the controls and shall be visible to the operator. A radius indicator shall be provided.

(b) The posted safe working loads of mobile crawler or truck cranes under the conditions of use shall not be exceeded.

(4) Accessible areas within the swing radius of the outermost part of the body of a revolving derrick or crane whether permanently or temporarily mounted, shall be guarded in such a manner as to prevent an employee from being in such a position as to be struck by the crane or caught between the crane and fixed parts of the vessel or of the crane itself.

(5) Marine railways:

(a) The cradle or carriage on the marine railway shall be positively blocked or secured when in the hauled position to prevent it from being accidentally released.

[Statutory Authority: RCW 49.17.010, 49.17.040, 49.17.050, and 49.17.060. 03-04-099, § 296-304-07009, filed 2/4/03, effective 8/1/03; Order 74-25, § 296-304-07009, filed 5/7/74.]

WAC 296-304-07011 Use of gear. (1) Loads shall be safely rigged before being hoisted.

(2) Plates shall be handled on and off hulls by means of shackles whenever possible. Clips or pads of ample size shall be welded to the plate to receive the shackle pins whenever there are no holes in the plate. When it is not possible to make holes in or to weld pads to the plate, alligator tongs, grab hooks, grab clamps or screw clamps may be used. In such cases special precautions shall be taken to keep employees from under such lifts.

(3) Tag lines shall be provided on loads likely to swing or to need guidance.

(4) When slings are secured to eyebolts, the slings shall be so arranged, using spreaders if necessary, that the pull is within 20 degrees of the axis of the bolt.

(5) Slings shall be padded by means of wood blocks or other suitable material where they pass over sharp edges or corners of loads so as to prevent cutting or kinking.

(6) Skips shall be rigged to be handled by not less than 3 legged bridles, and all legs shall always be used. When open end skips are used, means shall be taken to prevent the contents from falling.

(7) Loose ends of idle legs of slings in use shall be hung on the hook.

(8) Employees shall not be permitted to ride the hook or the load.

(9) Loads (tools, equipment or other materials) shall not be swung or suspended over the heads of employees.

(10) Pieces of equipment or structure susceptible to falling or dislodgement shall be secured or removed as early as possible.

(11) An individual who is familiar with the signal code in use shall be assigned to act as a signalman when the hoist operator cannot see the load being handled. Communications shall be made by means of clear and distinct visual or auditory signals except that verbal signals shall not be permitted.

(12) Pallets, when used, shall be of such material and construction and so maintained as to safely support and carry the loads being handled on them.

(13) A section of hatch through which materials or equipment are being raised, lowered, moved, or otherwise shifted manually or by a crane, winch, hoist, or derrick, shall be completely opened. The beam or pontoon left in place adjacent to an opening shall be sufficiently lashed, locked or otherwise secured to prevent it from moving so that it cannot be displaced by accident.

(14) Hatches shall not be opened or closed while employees are in the square of the hatch below.

(15) Before loads or empty lifting gear are raised, lowered, or swung, clear and sufficient advance warning shall be given to employees in the vicinity of such operations.

(16) At no time shall an employee be permitted to place himself in hazardous position between a swinging load and a fixed object.

TABLE E-1
DIMENSIONS AND SPACING OF WOOD
INDEPENDENT-POLE SCAFFOLD MEMBERS

Structural Members	Light duty (Up to 25 pounds per square foot) Height in feet			Heavy duty (25 to 75 pounds per square foot) Height in feet		
	< 24	>24<40	40<60	<24	>24<40	40<60
Poles or uprights (in inches)	2x4	3x4 or 2x6	4x4	3x4	4x4	4x6
Bearers (in inches)	2x4	2x6	2x6	2x8	2x8	2x10
Ledgers (in inches)	2x6	2x6	2x6	2x8	2x8	2x8
Stringer (not supporting bearers) (in inches)	1x6	1x6	1x6	1x6	1x6	1x6
Braces (in inches)	1x4	1x6	1x6	1x6	1x6	1x6
Pole spacing—longitudinally (in feet)	7 1/2	7 1/2	7 1/2	7	7	7
Pole spacing—transversely (in feet)	6 1/2 min	7 1/2 min	8 1/2 min	6 1/2	10	10
Ledger spacing—vertically (in feet)	7	7	7	4 1/2	4 1/2	4 1/2

TABLE E-2
SPECIFICATIONS FOR SIDE RAILS OF LADDERS

Length (in feet)	Cross section (in inches) At ends	At center
15	1 7/8 x 2 3/4	1 7/8 x 3 3/4
16	1 7/8 x 2 3/4	1 7/8 x 3 3/4
17	1 7/8 x 3	1 7/8 x 4
18	1 7/8 x 3	1 7/8 x 4
20	1 7/8 x 3	1 7/8 x 4 1/2
24	1 7/8 x 3	1 7/8 x 4 1/2

TABLE E-3
SPECIFICATIONS FOR THE CONSTRUCTION OF HORSES

Structural Members	Height in feet <10	>10<16	16<20
	Inches	Inches	Inches
Legs	2x4	3x4	4x6
Bearers or headers	2x6	2x8	4x6
Crossbraces	2x4 or 1x8	2x4	2x6
Longitudinal braces	2x4	2x6	2x6

TABLE E-4
SAFE CENTER LOADS FOR SCAFFOLD PLANK
OF 1,100 POUNDS FIBRE STRESS

[Codification note: The graphic presentation of this table has been varied in order that it would fall within the printing specifications for the Washington Administrative Code. The following table had lumber dimensions in the table heading typed in vertically across the page while the remainder of the table was typed horizontally on the page. The "Span in Feet" materials (6 through 16) which ran top to bottom has been switched to run left to right on the page. The "Lumber dimensions in inches" which ran left to right on the page has been switched to run top to bottom on the page.]

Lumber dimensions in inches	Span in Feet 6	8	10	12	14	16
A-2 x 10 B-1 5/8 x 9 1/2	256	192	153	128	110	—
A-2 x 12 B-1 5/8 x 11 1/2	309	232	186	155	133	116
A-3 x 8 B-2 5/8 x 7 1/2	526	395	316	263	225	197
A-3 x 10 B-2 5/8 x 9 1/2	667	600	400	333	286	250
A-3 x 12 B-2 5/8 x 11 1/2	807	605	484	404	346	303

(A)—Rough lumber.
(B)—Dressed lumber.

TABLE G-1
MANILA ROPE
(in pounds or tons of 2000 pounds)

Circumference	Diameter in Inches	Single Leg	60°	45°	30°
3/4	1/4	120 lbs.	204 lbs.	170 lbs.	120 lbs.
1	5/16	200	346	282	200
1-1/8	3/8	270	467	380	270
1-1/4	7/16	350	605	493	350
1-3/8	15/32	450	775	635	450
1-1/2	1/2	530	915	798	530
1-3/4	9/16	690	1190	973	690
2	5/8	880	1520	1240	880
2-1/4	3/4	1080	1870	1520	1080
2-1/2	13/16	1300	2250	1830	1300
2-3/4	7/8	1540	2660	2170	1540
3	1	1800	3120	2540	1800
3-1/4	1-1/16	1.0 tons	1.7 tons	1.4 tons	1.0 tons
3-1/2	1-1/8	1.2	2.1	1.7	1.2
3-3/4	1-1/4	1.35	2.3	1.9	1.35
4	1-5/16	1.5	2.6	2.1	1.5
4-1/2	1-1/2	1.8	3.1	2.5	1.8
5	1-5/8	2.25	3.9	3.2	2.25
5-1/2	1-3/4	2.6	4.5	3.7	2.6
6	2	3.1	5.4	4.4	3.1
6-1/2	2-1/8	3.6	6.2	5.1	3.6

TABLE G-2
RATED CAPACITIES FOR IMPROVED PLOW
STEEL, INDEPENDENT WIRE ROPE CORE,
WIRE ROPE AND WIRE ROPE SLINGS
(in tons of 2000 pounds)

Rope Dia. Inches	SINGLE LEG Vertical A	B	C	Choker A	B	C
6X19 CLASSIFICATION						
1/4"	.59	.56	.53	.44	.42	.40
3/8"	1.3	1.2	1.1	.98	.93	.86
1/2"	2.3	2.2	2.0	1.7	1.6	1.5
5/8"	3.6	3.4	3.0	2.7	2.5	2.2
3/4"	5.1	4.9	4.2	3.8	3.6	3.1
7/8"	6.9	6.6	5.5	5.2	4.9	4.1
1"	9.0	8.5	7.2	6.7	6.4	5.4
1-1/8"	11.0	10.0	9.0	8.5	7.8	6.8
6X37 CLASSIFICATION						
1-1/4"	13.	12.	10.	9.9	9.2	7.9
1-3/8"	16.	15.	13.	12.	11.	9.6
1-1/2"	19.	17.	15.	14.	13.	11.
1-3/4"	26.	24.	20.	19.	18.	15.
2"	33.	30.	26.	25.	23.	20.
2-1/4"	41.	38.	33.	31.	29.	25.

(A) - Socket or swaged terminal attachment
(B) - Mechanical sleeve attachment.
(C) - Hand tucked splice attachment.

TABLE G-3
RATED CAPACITIES FOR
IMPROVED PLOW STEEL,
INDEPENDENT WIRE ROPE CORE,
WIRE ROPE SLINGS
(in tons of 2000 pounds)

[Codification note: The graphic presentation of this table has been varied slightly in order that it would fall within the printing specifications for the Washington Administrative Code. The following table was too wide to be accommodated in the width of the WAC column. The table as codified has been divided into two tables covering the "TWO—LEG BRIDLE OR BASKET HITCH" for 6x19 Classification and for 6x37 Classification. Part One has Rope Diameter in Inches for Vertical and 60° within the two classifications. Part Two has Rope Diameter in Inches for 45° and 30° within the two classifications.]

TWO - LEG BRIDLE OR BASKET HITCH
(TABLE G-3: Part 1—Vertical and 60° Positions)

Rope Dia. Inches	Vertical A	B	C	60° A	B	C
6X19 CLASSIFICATION						
1/4"	1.2	1.1	1.0	1.0	.97	.92
3/8"	2.6	2.5	2.3	2.3	2.1	2.0

Rope Dia. Inches	Vertical A	Vertical B	Vertical C	60° A	60° B	60° C
1/2"	4.6	4.4	3.9	4.0	3.8	3.4
5/8"	7.2	6.8	6.0	6.2	5.9	5.2
3/4"	10.	9.7	8.4	8.9	8.4	7.3
7/8"	14.	13.	11.	12.	11.	9.6
1"	18.	17.	14.	15.	15.	12.
1-1/8"	23.	21.	18.	19.	18.	16.
6X37 CLASSIFICATION						
1-1/4"	26.	24.	21.	23.	21.	18.
1-3/8"	32.	29.	25.	28.	25.	22.
1-1/2"	38.	35.	30.	33.	30.	26.
1-3/4"	51.	47.	41.	44.	41.	35.
2"	66.	61.	53.	57.	53.	46.
2-1/4"	83.	76.	66.	72.	66.	57.

TWO - LEG BRIDLE OR BASKET HITCH
(TABLE G-3: Part 2—45° and 30° Positions)

Rope Dia. Inches	45° A	45° B	45° C	30° A	30° B	30° C
6X19 CLASSIFICATION						
1/4"	.83	.79	.75	.59	.56	.53
3/8"	1.8	1.8	1.6	1.3	1.2	1.1
1/2"	3.2	3.1	2.8	2.3	2.2	2.0
5/8"	5.1	4.8	4.2	3.6	3.4	3.0
3/4"	7.2	6.9	5.9	5.1	4.9	4.2
7/8"	9.8	9.3	7.8	6.9	6.6	5.5
1"	13.	12.	10.	9.0	8.5	7.2
1-1/8"	16.	15.	13.	11.	10.	9.0
6X37 CLASSIFICATION						
1-1/4"	19.	17.	15.	13.	12.	10.
1-3/8"	22.	21.	18.	16.	15.	13.
1-1/2"	27.	25.	21.	19.	17.	15.
1-3/4"	36.	33.	29.	26.	24.	20.
2"	47.	43.	37.	33.	30.	26.
2-1/4"	58.	54.	47.	41.	38.	33.

(A) - Socket or swaged terminal attachment.
(B) - Mechanical sleeve attachment.
(C) - Hand tucked splice attachment.

TABLE G-4
RATED CAPACITIES FOR
IMPROVED PLOW STEEL,
FIBER CORE, WIRE ROPE AND
WIRE ROPE SLINGS
(in tons of 2000 pounds)

Rope Dia. Inches	SINGLE LEG Vertical A	Vertical B	Vertical C	Choker A	Choker B	Choker C
6X19 CLASSIFICATION						
1/4	.55	.51	.49	.41	.38	.37
3/8	1.2	1.1	1.1	.91	.85	.80
1/2	2.1	2.0	1.8	1.6	1.5	1.4
5/8	3.3	3.1	2.8	2.5	2.3	2.1
3/4	4.8	4.4	3.9	3.6	3.3	2.9
7/8	6.4	5.9	5.1	4.8	4.5	3.9
1	8.4	7.7	6.7	6.3	5.8	5.0
1-1/8	10.	9.5	8.4	7.9	7.1	6.3
6X37 CLASSIFICATION						
1-1/4	12.	11.	9.8	9.2	8.3	7.4
1-3/8	15.	13.	12.	11.	10.	8.9
1-1/2	17.	16.	14.	13.	12.	10.
1-3/4	24.	21.	19.	18.	16.	14.
2	31.	28.	25.	23.	21.	18.

(A) - Socket or swaged terminal attachment.
(B) - Mechanical sleeve attachment.
(C) - Hand tucked splice attachment.

TABLE G-5
RATED CAPACITIES FOR IMPROVED PLOW
STEEL, FIBER CORE, WIRE ROPE SLINGS
(in tons of 2000 pounds)

[Codification note: The graphic presentation of this table has been varied slightly in order that it would fall within the printing specifications for the Washington Administrative Code. The following table was too wide to be accommodated in the width of the WAC column. The table as codified has been divided into two tables covering the "TWO - LEG BRIDLE OR BASKET HITCH" for 6x19 Classification and for 6x37 Classification. Part One has Rope Diameter in Inches for Vertical and 60° within the two classifications. Part Two has Rope Diameter in Inches for 45° and 30° within the two classifications.]

TWO - LEG BRIDLE OR BASKET HITCH
(TABLE G-5: Part 1—Vertical and 60° Positions)

Rope Dia. Inches	Vertical A	Vertical B	Vertical C	60° A	60° B	60° C
6X19 CLASSIFICATION						
1/4	1.1	1.0	.99	.95	.88	.85
3/8	2.4	2.2	1.9	2.1	1.9	1.8
1/2	4.3	3.9	3.7	3.7	3.4	3.2
5/8	6.7	6.2	5.6	5.8	5.3	4.8
3/4	9.5	8.8	7.8	8.2	7.6	6.8
7/8	13.	12.	10.	11.	10.	8.9
1	17.	15.	13.	14.	13.	11.
1-1/8	21.	19.	17.	18.	16.	14.
6X37 CLASSIFICATION						
1-1/4	25.	22.	20.	21.	19.	17.
1-3/8	30.	27.	24.	26.	23.	20.
1-1/2	35.	23.	28.	30.	27.	24.
1-3/4	48.	43.	38.	41.	37.	33.
2	62.	55.	49.	53.	48.	43.

TWO - LEG BRIDLE OR BASKET HITCH
(TABLE G-5: Part 2—45° and 30° Positions)

Rope Dia. Inches	45° A	45° B	45° C	30° A	30° B	30° C
6X19 CLASSIFICATION						
1/4	.77	.72	.70	.55	.51	.49
3/8	1.7	1.6	1.5	1.2	1.1	1.1
1/2	3.0	2.8	2.6	2.1	2.0	1.8
5/8	4.7	4.4	4.0	3.3	3.1	2.8
3/4	6.7	6.2	5.5	4.8	4.4	3.9
7/8	9.1	8.4	7.3	6.4	5.9	5.1
1	12.	11.	9.4	8.4	7.7	6.7
1-1/8	15.	13.	12.	10.	9.5	8.4
6X37 CLASSIFICATION						
1-1/4	17.	16.	14.	12.	11.	9.8
1-3/8	21.	19.	17.	15.	13.	12.
1-1/2	25.	22.	20.	17.	16.	14.
1-3/4	34.	30.	27.	24.	21.	19.
2	43.	39.	35.	31.	28.	25.

(A) - Socket or swaged terminal attachment.
(B) - Mechanical sleeve attachment.
(C) - Hand tucked splice attachment.

TABLE G-6
NUMBER AND SPACING OF U-BOLT WIRE ROPE CLIPS

Improved plow steel rope diameter inches	Number of Clips: Drop forged	Number of Clips: Other material	Minimum spacing (inches)
*	...	...	
1/2	3	4	3

Improved plow steel rope diameter inches	Number of Clips: Drop forged	Number of Clips: Other material	Minimum spacing (inches)
5/8	3	4	3 3/4
3/4	4	5	4 1/2
7/8	4	5	5 1/4
1	4	6	6
1 1/8	5	6	6 3/4
1 1/4	5	7	7 1/2
1 3/8	6	7	8 1/4
1 1/2	6	8	9

*Three clips shall be used on wire size less than 1/2-inch diameter.

TABLE G-7
WROUGHT IRON CHAIN
(in pounds or tons of 2000 pounds)

Nominal Size Chain Stock Inch	Single Leg	60°	45°	30°
* 1/4	1060	1835	1500	1060
* 5/16	1655	2865	2340	1655
3/8	2385	2.1	3370	2385
* 7/16	3250	2.8	2.3	3250
1/2	12.1	13.7	13.0	12.1
* 9/16	12.7	14.6	13.8	12.7
5/8	13.3	15.7	14.7	13.3
3/4	14.8	18.3	16.7	14.8
7/8	16.5	11.2	19.2	16.5
1	18.5	14.7	12.0	18.5
1- 1/8	10.0	17.3	14.2	10.0
1- 1/4	12.4	21.4	17.5	12.4
1- 3/8	15.0	25.9	21.1	15.0
1- 1/2	17.8	30.8	25.2	17.8
1- 5/8	20.9	36.2	29.5	20.9
1- 3/4	24.2	42.0	34.3	24.2
1- 7/8	27.6	47.9	39.1	27.6
2	31.6	54.8	44.8	31.6

*These sizes of wrought iron chain are no longer manufactured in the United States.

TABLE G-8
ALLOY STEEL CHAIN
(in tons of 2000 pounds)

Nominal Size Chain Stock Inch	Single Leg	60°	45°	30°
1/4	1.62	2.82	2.27	1.62
3/8	3.30	5.70	4.65	3.30
1/2	5.62	9.75	7.90	5.62
5/8	8.25	14.25	11.65	8.25
3/4	11.5	19.9	16.2	11.5
7/8	14.3	24.9	20.3	14.3
1	19.3	33.4	27.3	19.8
1-1/8	22.2	38.5	31.5	22.2
1-1/4	28.7	49.7	40.5	28.7
1-3/8	33.5	58.0	47.0	33.5
1-1/2	39.7	68.5	56.0	39.7
1-5/8	42.5	73.5	59.5	42.5
1-3/4	47.0	81.5	62.0	47.0

TABLE G-9
MAXIMUM ALLOWABLE WEAR AT ANY POINT OF LINK

Chain size in inches	Maximum allowable wear in fraction of inches
1/4 (9/32)	3/64
3/8	5/64
1/2	7/64
5/8	9/64
3/4	5/32
7/8	1/64
1	3/16
1 1/8	7/32
1 1/4	1/4
1 3/8	9/32
1 1/2	5/16
1 3/4	1/32

TABLE G-10
SAFE WORKING LOADS FOR SHACKLES
(in tons of 2,000 pounds)

Material size (inches)	Pin diameter (inches)	Safe working load
1/2	5/8	1.4
5/8	3/4	2.2
3/4	7/8	3.2
7/8	1	4.3
1	1 1/8	5.6
1 1/8	1 1/4	6.7
1 1/4	1 3/8	8.2
1 3/8	1 1/2	10.0
1 1/2	1 5/8	11.9
1 3/4	2	16.2
2	2 1/4	21.2

[Statutory Authority: RCW 49.17.010, 49.17.040, 49.17.050, and 49.17.060. 03-04-099, § 296-304-07011, filed 2/4/03, effective 8/1/03; Order 74-25, § 296-304-07011, filed 5/7/74.]

WAC 296-304-07013 Qualifications of operators. (1) When ship's gear is used to hoist materials aboard, a competent person shall determine that the gear is properly rigged, that it is in safe condition, and that it will not be overloaded by the size and weight of the lift.

(2) Only those employees who understand the signs, notices, and operating instructions, and are familiar with the signal code in use, shall be permitted to operate a crane, winch, or other power operated hoisting apparatus.

(3) No employee known to have defective uncorrected eyesight or hearing, or to be suffering from heart disease, epilepsy, or similar ailments which may suddenly incapacitate him, shall be permitted to operate a crane, winch or other power operated hoisting apparatus.

(4) No minor under eighteen years of age shall be employed in occupations involving the operation of any power-driven hoisting apparatus or assisting in such operations by work such as hooking on, loading slings, rigging gear, etc.

[Statutory Authority: RCW 49.17.010, 49.17.040, 49.17.050, and 49.17.060. 03-04-099, § 296-304-07013, filed 2/4/03, effective 8/1/03. Statutory Authority: RCW 49.17.040, [49.17].050 and [49.17].060. 98-02-006, § 296-304-07013, filed 12/26/97, effective 3/1/98; Order 74-25, § 296-304-07013, filed 5/7/74.]

WAC 296-304-080 Tools and related equipment—Scope and application. All sections of this chapter which include WAC 296-304-080 in the section number apply to tools and related equipment.

[Order 74-25, § 296-304-080, filed 5/7/74.]

WAC 296-304-08001 General precautions. (1) Hand lines, slings, tackles of adequate strength, or carriers such as tool bags with shoulder straps shall be provided and used to handle tools, materials, and equipment so that employees will have their hands free when using ship's ladders and access ladders. The use of hose or electric cords for this purpose is prohibited.

(2) When air tools of the reciprocating type are not in use, the discs and tools shall be removed.

(3) All portable, power-driven circular saws shall be equipped with guards above and below the base plate or shoe. The upper guard shall cover the saw to the depth of the teeth, except for the minimum arc required to permit the base to be tilted for bevel cuts. The lower guard shall cover the saw to the depth of the teeth, except for the minimum arc required to allow proper retraction and contact with the work. When the tool is withdrawn from the work, the lower guard shall automatically and instantly return to the covering position.

(4) The moving parts of machinery on dry docks shall be guarded.

(5) Before use, pneumatic tools shall be secured to the extension hose or whip by some positive means to prevent the tool from becoming accidentally disconnected from the whip.

(6) The moving parts of drive mechanisms, such as gearing and belting on large portable tools, shall be adequately guarded.

(7) Headers, manifolds, and widely spaced hose connections on compressed air lines shall bear the word "air" in letters at least 1 inch high, which shall be painted either on the manifolds or separate hose connections, or on signs permanently attached to the manifolds or connections. Grouped air connections may be marked in one location.

(8) Before use, compressed air hose shall be examined. Visibly damaged and unsafe hose shall not be used.

[Statutory Authority: RCW 49.17.010, 49.17.040, 49.17.050, and 49.17.060. 03-04-099, § 296-304-08001, filed 2/4/03, effective 8/1/03; Order 76-7, § 296-304-08001, filed 3/1/76; Order 74-25, § 296-304-08001, filed 5/7/74.]

WAC 296-304-08003 Portable electric tools. (1) The frames of portable electric tools and appliances, except double insulated tools approved by Underwriters' Laboratories, shall be grounded either through a third wire in the cable containing the circuit conductors or through a separate wire which is grounded at the source of the current.

(2) Grounding circuits, other than by means of the structure of the vessel on which the tool is being used, shall be checked to ensure that the circuit between the ground and the grounded power conductor has resistance which is low enough to permit sufficient current to flow to cause the fuse or circuit breaker to interrupt the current.

(3) Portable electric tools which are held in the hand shall be equipped with switches of a type which must be manually held in the closed position.

(4) Worn or frayed electric cables shall not be used.

(5) The employer shall notify the officer in charge of the vessel before using electric power tools operated with the vessel's current.

[Order 74-25, § 296-304-08003, filed 5/7/74.]

WAC 296-304-08005 Hand tools. (1) Employers shall not issue or permit the use of unsafe hand tools.

(2) Wrenches, including crescent, pipe, end and socket wrenches, shall not be used when jaws are sprung to the point that slippage occurs.

(3) Impact tools, such as drift pins, wedges, and chisels, shall be kept free of mushroomed heads.

(4) The wooden handles of tools shall be kept free of splinters or cracks and shall be kept tight in the tool.

[Order 74-25, § 296-304-08005, filed 5/7/74.]

WAC 296-304-08007 Abrasive wheels. (1) Floor stand and bench mounted abrasive wheels used for external grinding shall be provided with safety guards (protection hoods). The maximum angular exposure of the grinding wheel periphery and sides shall be not more than 90 degrees, except that when work requires contact with the wheel below the horizontal plane of the spindle, the angular exposure shall not exceed 125 degrees. In either case the exposure shall begin not more than 65 degrees above the horizontal plane of the spindle. Safety guards shall be strong enough to withstand the effect of a bursting wheel.

(2) Floor and bench mounted grinders shall be provided with work rests which are rigidly supported and readily adjustable. Such work rests shall be kept a distance not to exceed 1/8 inch from the surface of the wheel.

(3) Cup type wheels use for external grinding shall be protected by either a revolving cup guard or a band type guard in accordance with the provisions of the United States of American Standard Safety Code for the Use, Care, and Protection of Abrasive Wheels, B7.1.1970. All other portable abrasive wheels used for external grinding shall be provided with safety guards (protection hoods) meeting the requirements of (5) of this section, except as follows:

(a) When the work location makes it impossible, in which case a wheel equipped with safety flanges as described in (6) of this section shall be used.

(b) When wheels 2 inches or less in diameter which are securely mounted on the end of a steel mandrel are used.

(4) Portable abrasive wheels used for internal grinding shall be provided with safety flanges (protection flanges) meeting the requirements of (6) of this section, except as follows:

(a) When wheels 2 inches or less in diameter which are securely mounted on the end of a steel mandrel are used.

(b) If the wheel is entirely within the work being ground while in use.

(5) When safety guards are required, they shall be so mounted as to maintain proper alignment with the wheel, and the guard and its fastenings shall be of sufficient strength to retain fragments of the wheel in case of accidental breakage. The maximum angular exposure of the grinding wheel periphery and sides shall not exceed 180 degrees.

(6) When safety flanges are required, they shall be used only with wheels designed to fit the flanges. Only safety

flanges of a type and design and properly assembled so as to insure that the pieces of the wheel will be retained in case of accidental breakage shall be used.

(7) All abrasive wheels shall be closely inspected and ring tested before mounting to ensure that they are free from cracks or defects.

(8) Grinding wheels shall fit freely on the spindle and shall not be forced on. The spindle nut shall be tightened only enough to hold the wheel in place.

(9) The power supply shall be sufficient to maintain the rated spindle speed under all conditions of normal grinding. The rated maximum speed of the wheel shall not be exceeded.

(10) The employer must ensure that all employees using abrasive wheels are protected by eye protection equipment that meets the requirements of WAC 296-304-09005 (1) and (2), except when adequate eye protection is provided by eye shields permanently attached to the bench or floor stand.

[Statutory Authority: RCW 49.17.040, [49.17].050 and [49.17].060. 98-02-006, § 296-304-08007, filed 12/26/97, effective 3/1/98; Order 74-25, § 296-304-08007, filed 5/7/74.]

WAC 296-304-08009 Powder-actuated fastening tools. (1) The employer must ensure powder-actuated fastening tools are used, designed, constructed, and maintained according to the requirements of WAC 296-24-663, Safety requirements for powder-actuated fastening systems.

(2) The employer must ensure that employees using powder-actuated fastening tools are protected by personal protective equipment that meets the requirements of WAC 296-304-09005 (1) and (2). The employer must also meet the requirements of chapter 296-817 WAC, Hearing loss prevention (noise).

[Statutory Authority: RCW 49.17.010, 49.17.040, 49.17.050, and 49.17.060. 03-11-060, § 296-304-08009, filed 5/19/03, effective 8/1/03. Statutory Authority: RCW 49.17.040, [49.17].050 and [49.17].060. 98-02-006, § 296-304-08009, filed 12/26/97, effective 3/1/98. Statutory Authority: Chapter 49.17 RCW. 95-04-006, § 296-304-08009, filed 1/18/95, effective 3/10/95; Order 76-7, § 296-304-08009, filed 3/1/76; Order 74-25, § 296-304-08009, filed 5/7/74.]

WAC 296-304-08011 Internal combustion engines, other than ship's equipment. (1) When internal combustion engines, furnished by the employer are used in a fixed position below decks, for such purposes as driving pumps, generators, and blowers, the exhaust shall be led to the open air, clear of any ventilation intakes and openings through which it might enter the vessel

(2) All exhaust line joints and connections shall be checked for tightness immediately upon starting the engine, and any leaks shall be corrected at once.

(3) When internal combustion engines on vehicles, such as forklifts and mobile cranes, or on portable equipment such as fans, generators, and pumps exhaust into the atmosphere below decks, the competent person shall make tests of the carbon monoxide content of the atmosphere as frequently as conditions require to ensure that dangerous concentrations do not develop. Employees shall be removed from the compartment involved when the carbon monoxide concentration exceeds 50 parts per million (0.005%). The employer shall use blowers sufficient in size and number and so arranged as to maintain the concentration below this allowable limit before work is resumed.

[Order 74-25, § 296-304-08011, filed 5/7/74.]

WAC 296-304-090 Personal protective equipment (PPE)—General requirements. The employer must provide and ensure that each affected employee uses the appropriate personal protective equipment (PPE) for the eyes, face, head, extremities, torso, and respiratory system, including protective clothing, protective shields, hearing protection, protective barriers, personal fall protection equipment, and life saving equipment, wherever the employee is exposed to hazards that require the use of PPE. The employer must furnish the personal protective equipment at no cost to employees if:

- The intended purpose is to protect against hazardous materials (the PPE may be contaminated by hazardous materials in the course of employment); or
- The PPE is of such a nature that it would not reasonably be worn outside the worksite.

The provision of personal protective equipment which may reasonably be worn outside of the workplace is subject to labor-management negotiations, but the employer must ensure that exposed employees are wearing the appropriate PPE.

Examples of PPE that must be provided at no cost to employees include but are not limited to:

- Boots worn to protect against chemicals;
- Nonprescription protective eye wear;
- Goggles to fit over prescription eye wear;
- Metatarsal protection;
- Full body harnesses and lanyards.

Examples of PPE that provision is subject to labor-management negotiation include but are not limited to:

- Leather boots with or without steel toes;
- Coats to protect against inclement weather;
- Prescription protective eye wear (except as part of a full facepiece or hooded respirator).

[Statutory Authority: RCW 49.17.040, [49.17].050 and [49.17].060. 98-02-006, § 296-304-090, filed 12/26/97, effective 3/1/98; Order 74-25, § 296-304-090, filed 5/7/74.]

WAC 296-304-09001 Hazard assessment and equipment selection. (1) The employer must assess its work activity to determine if hazards that require the use of personal protective equipment (PPE) are present, or are likely to be present.

(a) If such hazards are present, or likely to be present, the employer must:

(i) Select, and require each affected employee to use, PPE that will protect the employee from the hazards identified in the hazard assessment;

(ii) Inform the affected employee what types of PPE to use;

(iii) Select PPE that properly fits the affected employee; and

(iv) Verify that the hazard assessment has been performed through a document that contains the following information:

- Work activity evaluated;
- Occupation;

• Date(s) of the hazard assessment; and

• The name of the person performing the hazard assessment.

Note: A hazard assessment conducted according to the trade or occupation of affected employees will be considered to comply with this requirement if it addresses all PPE - related hazards to which employees are exposed in the course of their work activities.

(2) The employer must ensure that employees do not use defective or damaged PPE.

(3) The employer must ensure that all unsanitary PPE, including all previously used PPE, is cleaned and disinfected before it is reissued.

[Statutory Authority: RCW 49.17.040, [49.17].050 and [49.17].060. 98-02-006, § 296-304-09001, filed 12/26/97, effective 3/1/98; Order 76-7, § 296-304-09001, filed 3/1/76; Order 74-25, § 296-304-09001, filed 5/7/74.]

WAC 296-304-09003 Training. The employer must provide training to each employee for whom PPE is required by this section.

(1) Each employee whose work activities require the use of PPE must be trained to know at least the following:

(a) When PPE is necessary;

(b) What PPE is necessary;

(c) How to properly put on, take off, adjust, and wear PPE;

(d) The limitations of the PPE; and

(e) The proper care, maintenance, useful life and disposal of the PPE.

(2) The employer must ensure that each affected employee demonstrates the ability to use PPE properly before being allowed to perform work where its use is required.

(3) The employer must retrain any employee who does not understand or display the skills required by subsection (2) of this section. Circumstances where retraining is required include, but are not limited to, situations where:

(a) Changes in occupation or work make previous training obsolete; or

(b) Changes in the types of PPE to be used make previous training obsolete; or

(c) Inadequacies in an affected employee's knowledge or use of assigned PPE indicate that the employee has not retained the understanding or skill.

(4) The employer must verify that each affected employee has received the required training through a document that contains the following information:

• Name of each employee trained;

• Date(s) of training; and

• Type of training the employee received.

[Statutory Authority: RCW 49.17.040, [49.17].050 and [49.17].060. 98-02-006, § 296-304-09003, filed 12/26/97, effective 3/1/98. Statutory Authority: Chapter 49.17 RCW. 93-19-142 (Order 93-04), § 296-304-09003, filed 9/22/93, effective 11/1/93. Statutory Authority: RCW 49.17.040 and 49.17.050. 83-24-013 (Order 83-34), § 296-304-09003, filed 11/30/83; Order 74-25, § 296-304-09003, filed 5/7/74.]

WAC 296-304-09005 Eye and face protection. (1) The employer must provide each affected employee with eye and face protection according to the following requirements:

(a) Each affected employee must use appropriate eye or face protection when exposed to eye or face hazards caused by flying particles, molten metal, liquid chemicals, acid or caustic liquids, chemical gases or vapors, or potentially injurious light radiation.

(b) Each affected employee must use eye or face protection that provides side protection when there is a hazard from flying objects. A detachable side protector (e.g., a clip-on or slide-on side shield) that meets the requirements of this section is acceptable.

(c) Each affected employee who wears prescription lenses must:

• Use eye protection that incorporates the prescription in its design; or

• Be protected by eye protection that can be worn over prescription lenses without disturbing the proper position of either the PPE or the prescription lenses.

(d) Each affected employee must use equipment with filter lenses of a shade that provides appropriate protection from injurious light radiation. Tables I-1A and I-1B lists the appropriate shade numbers for various operations. If filter lenses are used in goggles worn under a helmet with a lens, the shade number of the lens in the helmet may be reduced so that the shade numbers of the two lenses will equal the value shown in the Tables I-1A and I-1B.

(2) The employer must ensure that all protective eye and face devices meet the following criteria:

(a) Protective eye and face devices purchased after February 20, 1995, comply with the American National Standards Institute, ANSI Z87.1-1989, "Practice for Occupational and Educational Eye and Face Protection," or the employer demonstrates that the devices are equally effective.

(b) Eye and face protective devices purchased before February 20, 1995, comply with "American National Standard Practice for Occupational and Educational Eye and Face Protection, Z87.1-1979," or the employer demonstrates that the devices are equally effective.

[Statutory Authority: RCW 49.17.040, [49.17].050 and [49.17].060. 98-02-006, § 296-304-09005, filed 12/26/97, effective 3/1/98; Order 74-25, § 296-304-09005, filed 5/7/74.]

WAC 296-304-09007 Respiratory protection. The employer must provide respiratory protection that meets the requirements of the general occupational health standards, chapter 296-62 WAC, Part E.

[Statutory Authority: RCW 49.17.040, [49.17].050 and [49.17].060. 98-02-006, § 296-304-09007, filed 12/26/97, effective 3/1/98; Order 76-7, § 296-304-09007, filed 3/1/76; Order 74-25, § 296-304-09007, filed 5/7/74.]

WAC 296-304-09009 Hearing protection. The employer must meet the requirements of chapter 296-817 WAC, Hearing loss prevention (noise).

[Statutory Authority: RCW 49.17.010, 49.17.040, 49.17.050, and 49.17.060. 03-11-060, § 296-304-09009, filed 5/19/03, effective 8/1/03. Statutory Authority: RCW 49.17.040, [49.17].050 and [49.17].060. 98-02-006, § 296-304-09009, filed 12/26/97, effective 3/1/98.]

WAC 296-304-09011 Head protection. (1) The employer must provide each affected employee with head protection according to the following requirements:

(a) Each affected employee wears a protective helmet when working in areas where there is a potential for injury to the head.

(b) Each affected employee wears a protective helmet designed to reduce electrical shock hazards where there is potential for electric shock or burns from contact with exposed electrical conductors that could contact the head.

(2) The employer must ensure that all protective helmets meet the following criteria:

(a) Protective helmets purchased before February 20, 1995, comply with the "American National Standard Safety Requirements for Industrial Head Protection, Z89.1-1969," or the employer demonstrates that they are equally effective.

(b) Protective helmets purchased after February 20, 1995, comply with ANSI Z89.1-1986, "Personnel Protection—Protective Headwear for Industrial Workers-Requirements," or the employer demonstrates that they are equally effective.

[Statutory Authority: RCW 49.17.040, [49.17].050 and [49.17].060. 98-02-006, § 296-304-09011, filed 12/26/97, effective 3/1/98.]

WAC 296-304-09013 Foot protection. (1) The employer must ensure that each affected employee wears protective footwear when working in areas where:

• There is a danger of foot injuries from falling or rolling objects;

• There is a danger of foot injuries from objects piercing the sole; or

• Where an employee's feet are exposed to electrical hazards.

(2) The employer must ensure that all protective footwear meets the following criteria:

(a) Protective footwear purchased before February 20, 1995, complies with the ANSI standard "USA Standard for Men's Safety-Toe Footwear," ANSI Z41-1983, or the employer demonstrates that footwear is equally effective.

(b) Protective footwear purchased after February 20, 1995, complies with ANSI Z41-1991, "American National Standard for Personal Protection—Protective Footwear," or the employer demonstrates that footwear is equally effective.

[Statutory Authority: RCW 49.17.040, [49.17].050 and [49.17].060. 98-02-006, § 296-304-09013, filed 12/26/97, effective 3/1/98.]

WAC 296-304-09015 Hand and body protection. The employer must ensure that each affected employee uses appropriate hand protection and other protective clothing where there is exposure to hazards such as:

• Skin absorption of harmful substances;
• Severe cuts or lacerations;
• Severe abrasions;
• Punctures;
• Chemical burns;
• Thermal burns;
• Harmful temperature extremes; and
• Sharp objects.

(1) Hot work operations. The employer must ensure that an employee's clothing is free from flammable or combustible materials (such as grease or oil) while engaged in hot work operations or working near an ignition or oxygen source.

(2) Electrical protective devices. The employer must ensure that each affected employee wears protective electrical insulating gloves and sleeves or other electrical protective equipment, if that employee is exposed to electrical shock hazards while working on electrical equipment.

[Statutory Authority: RCW 49.17.040, [49.17].050 and [49.17].060. 98-02-006, § 296-304-09015, filed 12/26/97, effective 3/1/98.]

WAC 296-304-09017 Lifesaving equipment. (1) Personal flotation devices (PFD).

• You must provide your employees with PFDs approved by the United States Coast Guard for use on commercial or merchant vessels. The following are appropriate or allowable United States Coast Guard approved PFDs:

Type of PFD	General Description
Type I	Off-shore life jacket - effective for all waters or where rescue may be delayed.
Type II	Near-shore buoyant vest - intended for calm, inland water or where there is a good chance of quick rescue.
Type III	Flotation aid - good for calm, inland water, or where there is a good chance of rescue.
Type V	Flotation aids such as board-sailing vests, deck suits, work vests and inflatable PFDs marked for commercial use.

Note:
• Commercially available PFDs are marked or imprinted with the Type of PFD.
• Type IV PFDs are throwable devices. They are used to aid persons who have fallen into the water.
• The requirements for USCG approval are in 46 CFR Part 160, Coast Guard Lifesaving Equipment Specifications.

The employer must ensure that each personal flotation device is inspected before use for dry rot, chemical damage, or other defects that may affect its strength and buoyancy. Defective personal floatation devices shall not be used.

(2) Ring life buoys and ladders.

(a) The employer must ensure that when work is performed on a floating vessel 200 feet (61 m) or more in length, at least three 30-inch (0.76 m) U.S. Coast Guard approved ring life buoys with lines attached are located in readily visible and accessible places. Ring life buoys must be located one forward, one aft, and one at the access to the gangway.

(b) On floating vessels under 200 feet (61 m) in length, at least one 30-inch (0.76 m) U.S. Coast Guard approved ring life buoy with line attached must be located at the gangway.

(c) At least one 30-inch (0.76 m) U.S. Coast Guard approved ring life buoy with a line attached must be located on each staging alongside of a floating vessel on which work is performed.

(d) At least 90 feet (27.43 m) of line must be attached to each ring life buoy.

(e) There must be at least one portable or permanent ladder near each floating vessel on which work is performed. The ladder must be long enough to help an employee reach safety in the event of a fall into the water.

[Statutory Authority: RCW 49.17.010, 49.17.040, 49.17.050, and 49.17.060. 03-04-099, § 296-304-09017, filed 2/4/03, effective 8/1/03. Stat-

utory Authority: RCW 49.17.040, [49.17].050 and [49.17].060. 98-02-006, § 296-304-09017, filed 12/26/97, effective 3/1/98.]

WAC 296-304-09019 Fall protection—General requirement. The employer must provide and ensure the use of fall protection when employees work aloft or elsewhere at elevations more than 5 feet above a solid surface.

[Statutory Authority: RCW 49.17.040, [49.17].050 and [49.17].060. 98-02-006, § 296-304-09019, filed 12/26/97, effective 3/1/98.]

WAC 296-304-09021 Personal fall arrest systems (PFAS). Personal fall arrest systems must meet the requirements of this section.

(1) The employer must ensure that connectors and anchorages meet the following criteria:

(a) Connectors are made of drop forged, pressed, or formed steel or of materials with equivalent strength.

(b) Connectors have a corrosion-resistant finish, and all surfaces and edges are smooth to prevent damage to the interfacing parts of the system.

(c) D-rings and snaphooks can sustain a minimum tensile load of 5,000 pounds (22.24 Kn).

(d) D-rings and snaphooks are proof-tested to a minimum tensile load of 3,600 pounds (16 Kn) without cracking, breaking, or being permanently deformed.

(e) Snaphooks lock and are designed and used to prevent disengagement of the snaphook by contact of the snaphook keeper with the connected part.

(f) On suspended scaffolds or similar work platforms with horizontal lifelines that may become vertical lifelines, the devices used for connection to the horizontal lifeline can lock in any direction on the lifeline.

(g) Anchorages used for attachment of personal fall arrest equipment are independent of any anchorage used to support or suspend platforms.

(h) Anchorages can support at least 5,000 pounds (22.24 Kn) per employee attached, or are designed, installed, and used as follows:

(i) As part of a complete personal fall arrest system that maintains a safety factor of at least two; and

(ii) Under the direction and supervision of a qualified person.

(2) The employer must ensure that lifelines, lanyards, and personal fall arrest systems meet the following criteria:

(a) When vertical lifelines are used, each employee has a separate lifeline.

(b) Vertical lifelines and lanyards have a minimum tensile strength of 5,000 pounds (22.24 Kn).

(c) Self-retracting lifelines and lanyards that automatically limit free fall distances to 2 feet (0.61 m) or less can sustain a minimum tensile load of 3000 pounds (13.34 Kn) applied to a self-retracting lifeline or lanyard with the lifeline or lanyard in the fully extended position.

(d) Self-retracting lifelines and lanyards which do not limit free fall distance to 2 feet (0.61 m) or less, ripstitch lanyards and tearing and deforming lanyards can sustain a minimum static tensile load of 5,000 pounds (22.24 Kn) applied to the device when they are in the fully extended position.

(e) Horizontal lifelines are designed, installed, and used under the supervision of a qualified person, and only used as part of a complete personal fall arrest system that maintains a safety factor of at least two.

Note: The system strength needs below are based on a maximum combined weight of employee and tools of 310 pounds. If combined weight is more than 310 pounds (140.62 kg), appropriate allowances must be made or the system will not be in compliance.

(f) Effective April 20, 1998, the employer must ensure that personal fall arrest systems:

(i) Limit the maximum arresting force on a falling employee to 1,800 pounds (8 Kn) when used with a body harness;

(ii) Bring a falling employee to a complete stop and limit the maximum deceleration distance an employee travels to 3.5 feet (1.07 m); and

(iii) Are strong enough to withstand twice the potential impact energy of an employee free falling a distance of 6 feet (1.8 m), or the free fall distance permitted by the system, whichever is less.

(g) The employer must ensure that personal fall arrest systems are rigged so that an employee can neither free fall more than 6 feet (1.83 m) nor contact any lower level.

(3) The employer must select, use, and care for systems and system components according to the following requirements:

(a) Lanyards are attached to employees using personal fall arrest systems, as follows:

The attachment point of a body harness is in the center of the wearer's back near the shoulder level, or above the wearer's head. If the maximum free fall distance is less than 20 inches, the attachment point may be located in the chest position.

(b) Ropes and straps (webbing) used in lanyards, lifelines and strength components of body harnesses are made from synthetic fibers or wire rope.

(c) Ropes, harnesses, and lanyards are compatible with their hardware.

(d) Lifelines and lanyards are protected against cuts, abrasions, burns from hot work operations and deterioration by acids, solvents, and other chemicals.

(e) Personal fall arrest systems are inspected before each use for mildew, wear, damage, and other deterioration. Defective components are removed from service.

(f) Personal fall arrest systems and components subjected to impact loading are immediately removed from service and not used again for employee protection until inspected and determined by a qualified persons to be undamaged and suitable for reuse.

(g) The employer must provide for prompt rescue of employees in the event of a fall or must ensure that employees are able to rescue themselves.

(h) Personal fall arrest systems and components are used only for employee fall protection and not to hoist materials.

(4) Training. Before using personal fall arrest equipment, the employer must ensure that each affected employee is trained to understand the application limits of the equipment and proper hook-up, anchoring, and tie-off techniques. Affected employees must also be trained to demonstrate the proper use, inspection, and storage of their equipment.

[Statutory Authority: RCW 49.17.010, 49.17.040, 49.17.050, and 49.17.060. 03-04-099, § 296-304-09021, filed 2/4/03, effective 8/1/03. Stat-

utory Authority: RCW 49.17.040, [49.17].050 and [49.17].060. 98-02-006, § 296-304-09021, filed 12/26/97, effective 3/1/98.]

WAC 296-304-09023 Positioning device systems. The employer must ensure that positioning device systems and their use meet the requirements of this section.

(1) The employer must ensure that connectors and anchorages meet the following criteria:

(a) Connectors have a corrosion-resistant finish, and all surfaces and edges are smooth to prevent damage to interfacing parts of this system.

(b) Connecting assemblies have a minimum tensile strength of 5,000 pounds (22.24 Kn).

(c) Positioning device systems are secured to an anchorage that can support at least twice the potential impact load of an employee's fall.

(d) Only locking type snaphooks are used in positioning device systems.

(2) The employer must ensure that positioning device systems meet the following criteria:

(a) Restraint (tether) lines have a minimum breaking strength of 3,000 pounds (13.34 Kn).

(b) Beginning April 20, 1998, the following system performance criteria for positioning device systems are met:

(i) A window cleaner's positioning system can withstand without failure, a drop test consisting of a 6-foot (1.83 m) drop of a 250-pound (113.34 kg) weight. The system limits the initial arresting force to a maximum of 2,000 pounds (8.89 Kn), with a maximum duration of 2 milliseconds. The system limits any subsequent arresting forces imposed on the falling employee to a maximum of 1,000 pounds (4.45 Kn);

(ii) All other positioning device systems can withstand without failure a drop test consisting of a 4-foot (1.22 m) drop of a 250-pound (113.34 kg) weight.

(3) The employer must ensure that a positioning device system is used and cared for according to the following requirements:

(a) Positioning device systems are inspected before each use for mildew, wear, damage, and other deterioration. Defective components are removed from service.

(b) A positioning device system or component subjected to impact loading is immediately removed from service and not used again for employee protection, unless inspected and determined by a qualified person to be undamaged and suitable for reuse.

(4) Training. Before using a positioning device system, the employer must ensure that employees are trained in the application limits, proper hook-up, anchoring and tie-off techniques, methods of use, inspection, and storage of positioning device systems.

[Statutory Authority: RCW 49.17.010, 49.17.040, 49.17.050, and 49.17.060. 03-04-099, § 296-304-09023, filed 2/4/03, effective 8/1/03. Statutory Authority: RCW 49.17.040, [49.17].050 and [49.17].060. 98-02-006, § 296-304-09023, filed 12/26/97, effective 3/1/98.]

WAC 296-304-100 Ship's machinery and piping systems—Scope and application. All sections of this chapter which include WAC 296-304-100 in this section number apply to ship's machinery and piping systems and sections WAC 296-304-10001 to 296-304-10007 apply only to shipbuilding and ship repairing.

[Order 74-25, § 296-304-100, filed 5/7/74.]

WAC 296-304-10001 Ship's boilers. (1) Before work is performed in the fire, steam, or water spaces of a boiler where employees may be subject to injury from the direct escape of a high temperature medium, such as steam, or water, oil, or other medium at a high temperature entering from an interconnecting system, the employer shall insure that the following steps are taken:

(a) The isolation and shutoff valves connecting the dead boiler with the live system or systems shall be secured, blanked, and tagged indicating that employees are working in the boiler. This tag shall not be removed nor the valves unblanked until it is determined that this may be done without creating a hazard to the employees working in the boiler, or until the work in the boiler is completed. Where valves are welded instead of bolted at least two isolation and shutoff valves connecting the dead boiler with the live system or systems shall be secured, locked and tagged.

(b) Drain connections to atmosphere on all of the dead interconnecting systems shall be opened for visual observation of drainage.

(d) A warning sign calling attention to the fact that employees are working in the boilers shall be hung in a conspicuous location in the engine room. This sign shall not be removed until it is determined that the work is completed and all employees are out of the boilers.

[Order 74-25, § 296-304-10001, filed 5/7/74.]

WAC 296-304-10003 Ship's piping systems. Before work is performed on a valve, fitting, or section of piping in a piping system where employees may be subject to injury from the direct escape of steam, or water, oil, or other medium at a high temperature, the employer shall insure that the following steps are taken:

(1) The isolation and shutoff valves connecting the dead system with the live system or systems shall be secured, blanked, and tagged indicating that employees are working on the systems. This tag shall not be removed nor the valves unblanked until it is determined that this may be done without creating a hazard to the employees working on the system, or until the work on the system is completed. Where valves are welded instead of bolted at least two isolation and shutoff valves connecting the dead system with the live system or systems shall be secured, locked, and tagged.

(2) Drain connections to the atmosphere on all of the dead interconnecting systems shall be opened for visual observation of drainage.

[Statutory Authority: RCW 49.17.010, 49.17.040, 49.17.050, and 49.17.060. 03-04-099, § 296-304-10003, filed 2/4/03, effective 8/1/03; Order 74-25, § 296-304-10003, filed 5/7/74.]

WAC 296-304-10005 Ship's propulsion machinery. (1) Before work is performed on the main engine, reduction gear, or connecting accessories, the employer shall ensure that the following steps are taken:

(a) The jacking gear shall be engaged to prevent the main engine from turning over. A sign shall be posted at the throttle indicating that the jacking gear is engaged. This sign shall not be removed until the jacking gear can be safely disengaged.

(b) If the jacking gear is steam driven, the stop valves to the jacking gear shall be secured, locked, and tagged indicating that employees are working on the main engine.

(c) If the jacking gear is electrically driven, the circuit controlling the jacking gear shall be deenergized by tripping the circuit breaker, opening the switch or removing the fuse, whichever is appropriate. The breaker, switch, or fuse location shall be tagged indicating that employees are working on the main engine.

(2) Before the jacking engine is operated, the following precautions shall be taken:

(a) A check shall be made to ensure that all employees, equipment, and tools are clear of the engine, reduction gear, and its connecting accessories.

(b) A check shall be made to ensure that all employees, equipment and tools are free of the propeller.

(3) Before work is started on or in the immediate vicinity of the propeller, a warning sign calling attention to the fact that employees are working in that area shall be hung in a conspicuous location in the engine room. This sign shall not be removed until it is determined that the work is completed and all employees are free of the propeller.

(4) Before the main engine is turned over (e.g., when warming up before departure or testing after an overhaul) a check shall be made to ensure that all employees, equipment, and tools are free of the propeller.

[Order 76-7, § 296-304-10005, filed 3/1/76; Order 74-25, § 296-304-10005, filed 5/7/74.]

WAC 296-304-10007 Ship's deck machinery. (1) Before work is performed on the anchor windlass or any of its attached accessories, the employer shall ensure that the following steps are taken:

(a) The devil claws (also known as chain toppers) shall be made fast to the anchor chains.

(b) The riding pawls shall be in the engaged position.

(c) In the absence of devil claws and riding pawls, the anchor chains shall be secured to a suitable fixed structure of the vessel.

[Statutory Authority: RCW 49.17.010, 49.17.040, 49.17.050, and 49.17.060. 03-04-099, § 296-304-10007, filed 2/4/03, effective 8/1/03; Order 74-25, § 296-304-10007, filed 5/7/74.]

WAC 296-304-110 Portable, unfired pressure vessels, drums and containers, other than ship's equipment—Scope and application. All sections of this chapter which include WAC 296-304-110 in the section number apply to portable, unfired pressure vessels, drums and containers, other than ship's equipment and WAC 296-304-11001 to 296-304-11003 applies only to shipbuilding and ship repairing.

[Order 74-25, § 296-304-110, filed 5/7/74.]

WAC 296-304-11001 Portable air receivers and other unfired pressure vessels. (1) Portable, unfired pressure vessels, built after the effective date of this regulation, shall be marked and reported indicating that they have been designed and constructed to meet the standards of the American Society of Mechanical Engineers Boiler and Pressure Vessel Code, Section VIII, Rules for Construction of Unfired Pressure Vessels, 1963. They shall be subjected to a hydrostatic pressure test of one and one-half times the working pressure of the vessels.

(2) Portable, unfired pressure vessels, not built to the code requirements of (1) of this section, and built prior to the effective date of this regulation, shall be examined quarterly by a competent person, and approved by the state boiler inspecting division. They shall be subjected yearly to a hydrostatic pressure test of one and one-half times the working pressure of the vessels.

(3) The relief valves on the portable, unfired pressure vessels in (1) and (2) of this section shall be set to the safe working pressure of the vessels, or set to the lowest safe working pressure of the systems, whichever is lower.

(4) A record of such examinations and tests made in compliance with the requirements of (1) and (2) of this section shall be maintained.

[Order 74-25, § 296-304-11001, filed 5/7/74.]

WAC 296-304-11003 Drums and containers. (1) Shipping drums and containers shall not be pressurized to remove their contents.

(2) A temporarily assembled pressurized piping system conveying hazardous liquids or gases shall be provided with a relief valve and by-pass to prevent rupture of the system and the escape of such hazardous liquids or gases.

(3) Pressure vessels, drums and containers containing toxic or flammable liquids or gases shall not be stored or used where they are subject to open flame, hot metal, or other sources of artificial heat.

(4) Unless pressure vessels, drums and containers of 30 gallon capacity or over containing flammable or toxic liquids or gases are placed in an out-of-the-way area where they will not be subject to physical injury from an outside source, barriers or guards shall be erected to protect them from such physical injury.

(5) Containers of 55 gallons or more capacity containing flammable or toxic liquid shall be surrounded by dikes or pans which enclose a volume equal to at least 25 percent of the total volume of the containers.

(6) Fire extinguishers adequate in number and suitable for the hazard shall be provided. These extinguishers shall be located in the immediate area where pressure vessels, drums and containers containing flammable liquids or gases are stored or in use. Such extinguishers shall be ready for use at all times.

[Order 74-25, § 296-304-11003, filed 5/7/74.]

WAC 296-304-120 Electrical machinery—Electrical circuits and distribution boards. (1) Before an employee is permitted to work on an electrical circuit, except when the circuit must remain energized for testing and adjusting, the circuit shall be deenergized and checked at the point at which the work is to be done to insure that it is actually deenergized. When testing or adjusting an energized circuit a rubber mat, duck board, or other suitable insulation shall be used underfoot where an insulated deck does not exist.

(2) Deenergizing the circuit shall be accomplished by opening the circuit breaker, opening the switch, or removing the fuse, whichever method is appropriate. The circuit

breaker, switch, or fuse location shall be tagged to indicate that an employee is working on the circuit. Such tags shall not be removed nor the circuit energized until it is definitely determined that the work on the circuit has been completed.

(3) When work is performed immediately adjacent to an open-front energized board or in back of an energized board, the board shall be covered or some other equally safe means shall be used to prevent contact with any of the energized parts.

Note: WAC 296-304-120 is applicable only to shipbuilding and ship repairing.

[Order 74-25, § 296-304-120, filed 5/7/74.]

WAC 296-304-130 Gear certification—General provisions. All sections of this chapter which include WAC 296-304-130 in the section number apply to gear certification.

[Order 74-25, § 296-304-130, filed 5/7/74.]

WAC 296-304-13001 Purpose and scope. (1) The regulations in this part implement WAC 296-304-07001 through 296-304-07013. They provide procedures and standards governing accreditation of persons by the department of labor and industries, for the purpose of certificating shore-based material handling devices, and the manner in which such certification shall be performed.

(2) Accreditation is not required, and the regulations of this part are not applicable, under the following circumstances:

(a) Persons not required to be accredited for gear certification purposes, may, nevertheless, apply for and receive accreditation by the department of labor and industries. The appropriate portions of this section shall apply to persons accredited except insofar as exemptions may be granted.

[Order 74-25, § 296-304-13001, filed 5/7/74.]

WAC 296-304-13003 Definitions of terms. (1) "Vessel" means every description of watercraft or other artificial contrivance used or capable of being used, as a means of transportation on water, including special-purpose floating structures not primarily designed for or used as a means of transportation on water.

(2) Except as otherwise noted, "cargo gear," as used in WAC 296-304-140 through 296-304-17023, includes that gear forming a part of a vessel's equipment which is used for the handling of cargo other than bulk liquids, but does not include gear which is used only for handling or holding hoses, handling ships' stores, handling the gangway, or boom conveyor belt systems for the self-unloading of bulk cargo vessels.

(3) With reference to equipment covered by this section.

(a) "Derrick" means—

(i) When applied to vessels' cargo handling gear, a mechanical device for lifting, including a boom which is suspended at its head by a topping lift from a mast, king post, or similar structure, controlled in the horizontal plane by vangs, and used either singly or in pairs with married falls;

(ii) When applied to shore-based material handling devices, a mechanical device intended for lifting, with or without a boom supported at its head by a topping lift from a mast, fixed A frame, or similar structure. The mast or equivalent member may or may not be supported by guys or braces. The boom, where fitted, may or may not be controlled in the horizontal plane by guys (vangs). The term includes shear legs.

(b) "Crane" means a mechanical device intended for lifting or lowering a load and moving it horizontally, in which the hoisting mechanism is an integral part of the machine. A crane may be a fixed or mobile machine.

(c) "Bulk cargo spout" means a spout, which may or may not be telescopic and may or may not have removable sections, but is suspended over the vessel from some overhead structure by wire rope or other means. Such a spout is often used with a "thrower" or "trimming machine." A grain loading spout is an example of those covered by this definition.

(d) "Bulk cargo sucker" means a pneumatic conveyor which utilizes a spout-like device, which may be adjustable vertically and/or laterally, and which is suspended over a vessel from some overhead structure by wire rope or other means. An example of an installation of this nature is the "grain sucker" used to discharge grain from barges.

(4) "Director" means the director of the department of labor and industries, or his authorized representative.

(5) "Bureau" means the Bureau of Labor Standards, U.S. Department of Labor.

(6) "Person" includes any individual, partnership, corporation, agency, association, or organization.

(7) "Competent person" means:

(a) An individual qualified to perform gear certification functions with respect to vessels' cargo handling gear, as specifically set forth in WAC 296-304-17023.

(b) An individual qualified under the provisions of WAC 296-304-180 through 296-304-18003 and 296-304-190 through 296-304-19001 to perform gear certification functions with respect to shore-based material handling devices.

(8) "Ton" means a ton of 2,240 pounds when applied to vessels' cargo handling gear, and a ton of 2,000 pounds when applied to shore-based material handling devices or to shore-type cranes permanently mounted aboard barges or other vessels employed in domestic trade and designed on the basis of the 2,000-pound ton. Capacity ratings may be stated in pounds.

(9) "Nondestructive" examination means examination of structure or parts by electronic, ultrasonic, or other nondestructive examination suitable for the purpose.

[Order 74-25, § 296-304-13003, filed 5/7/74.]

WAC 296-304-140 Procedure governing accreditation—Scope and application. All sections of this chapter which include WAC 296-304-140 in the section number apply to procedure governing accreditation.

[Order 74-25, § 296-304-140, filed 5/7/74.]

WAC 296-304-14001 Application for accreditation. (1) Application. Any person seeking accreditation shall file an original and duplicate copy of an application for accreditation with the director of the department of labor and industries, on a form provided by the department of labor and industries, for this purpose. Each application shall be signed and certified by the applicant and, if the applicant is an

agency or organization, by a responsible officer of such agency or organization.

(2) Contents of application. The application form shall include the following information:

(a) A statement detailing the applicable types of work performed by the applicant in the past, noting the amount and extent of such work performed within the previous three years, listing representative vessels involved, and including representative job orders if available, or equivalent evidence;

(b) Descriptive details concerning any testing instruments and heat treatment furnaces which are to be used in conducting required tests or heat treatments. Test reports indicating that instruments meet the accuracy standards set forth in this section shall be included;

(c) A list setting forth the ports in which applicant currently conducts his business as well as those in which he proposes to conduct gear certification activities;

(d) A list of the applicant's responsible qualified personnel, both supervisory and managerial and including any surveyors, with resumes of their individual experience in the testing, examination, inspection and heat treatment of cargo gear. Such list shall include any branch office personnel or surveyors appointed to act in the applicant's behalf in any of the ports of the United States: Provided, however, That where the submission of individual resumes would be unduly burdensome because of the large number of persons engaged in the applicant's behalf, the applicant, after stating this fact, need only submit a list of its personnel together with a detailed statement of the qualifications upon which the appointment of surveyors is bases;

(e) Names of at least three business references who will furnish information regarding work performed by the applicant;

(f) Any additional information the applicant deems to be pertinent.

[Order 74-25, § 296-304-14001, filed 5/7/74.]

WAC 296-304-14003 Action upon application. (1) Upon receipt of an application for accreditation, the director shall approve or deny the application. The director may conduct an investigation, which may include a hearing, prior to approving or denying an application. To the extent he deems appropriate, the director may provide an opportunity to other interested persons to present data and views on the application prior to approval or denial.

(2) Any application which fails to present the information required by the prescribed form may be returned to the applicant with a notation of deficiencies and without prejudice to submission of a new or revised application.

(3) If the application is approved, notice of approval shall be mailed to the applicant. If the application is denied, notice of such denial shall be mailed to the applicant and such denial shall be without prejudice to any subsequent application except where such action is deemed to be in the public interest. In the event an application is denied with prejudice, the provisions of WAC 296-304-14013 shall be applicable.

(4) A copy of the notice of accreditation shall be kept on file by applicant at the applicant's place of business.

[Order 74-25, § 296-304-14003, filed 5/7/74.]

WAC 296-304-14005 Duration and renewal of accreditation. The period of accreditation shall not exceed three years. Applications for renewal of accreditation shall be made on the same form as described in WAC 296-304-14001. No accreditation shall expire until action on an application for renewal shall have been finally determined: Provided, That such application has been properly executed in accordance with WAC 296-304-14001 and filed with and received by the director not less than 15 nor more than 60 days prior to the expiration date. A final determination means either the approval or initial denial of the application for renewal. The procedure specified in WAC 296-304-14003 shall be applicable to all applications for renewal.

[Order 74-25, § 296-304-14005, filed 5/7/74.]

WAC 296-304-14007 Criteria governing accreditation to certificate vessels' cargo gear. (1) A person applying for accreditation to issue registers and pertinent certificates, to maintain registers and appropriate records, and to conduct initial, annual and quadrennial surveys, shall not be accredited unless he is engaged in one or more of the following activities:

(a) Classification of vessels;

(b) Certification of vessels' cargo gear;

(c) Shipbuilding or ship repairing, or both insofar as related to work on vessels' cargo handling gear;

(d) Unit and loose gear testing of vessels' cargo handling gear.

(2) Applicants for accreditation under WAC 296-304-14007(1) for operations in coastal or Great Lakes ports who come within WAC 296-304-14007 (1)(b) or (d) shall not be accredited unless they conduct at least 1,500 hours of cargo gear certification work per year.

(3) A person applying for accreditation to carry out tests of loose gear or wire rope, or both, or to carry out heat treatments, and to issue the related certificates, shall be engaged in one or both of the following activities:

(a) Testing of loose gear or wire rope, or both;

(b) Heat treatment of chains and loose cargo gear.

(4) A person applying for accreditation shall be staffed by individuals technically qualified to conduct the inspections and examinations and to conduct or supervise tests and heat treatments prescribed in this part. Any representatives, agents or surveyors acting on behalf of a person applying for accreditation in ports in which such operations are conducted shall be similarly qualified.

(a) Accreditation to conduct such nondestructive examination as may be a part of any certification activity may be granted to applicants found competent and equipped to carry out this activity.

(5) Except as noted in WAC 296-304-13501(3), and unless exemptions are granted under WAC 296-304-15001(8), a person applying for accreditation as specified in WAC 296-304-14007(1) shall be prepared to carry out all of the requirements of WAC 296-304-150 through 296-304-15005, 296-304-160 through 296-304-16025, and 296-304-170 through 296-304-17023 except that loose gear and wire rope tests and heat treatments may be carried out by the manufacturer of the gear concerned or by another person accredited specifically for this purpose.

(6) A person applying for accreditation shall have a satisfactory record of performance.

[Order 74-25, § 296-304-14007, filed 5/7/74.]

WAC 296-304-14009 Voluntary amendment or termination of accreditation. The accreditation of any person may be voluntarily amended or terminated upon written request filed with the director.

[Order 74-25, § 296-304-14009, filed 5/7/74.]

WAC 296-304-14011 Suspension or revocation of accreditation. The director may suspend or revoke an accreditation of any person for cause. Except in cases of willfulness or cases in which the public interest requires otherwise, before any accreditation is suspended or revoked facts or conduct which may warrant such action shall be called to the attention of the person involved in writing and that person shall be afforded an opportunity to achieve or demonstrate appropriate compliance.

[Order 74-25, § 296-304-14011, filed 5/7/74.]

WAC 296-304-14013 Reconsideration and review. (1) Any person aggrieved by the action of the director or his authorized representative in denying, granting, suspending or revoking an accreditation under this section may within 15 days after such action, (a) file a written request for reconsideration thereof by the director or the authorized representative of the director who made the decision in the first instance, or (b) file a written request for review of the decision by the director or an authorized representative of the director, who has taken no part in the action which is the subject for review.

(2) A request for reconsideration shall be granted where the applicant shows that there is additional evidence which may materially affect the decision and that there were reasonable grounds for failure to adduce such evidence in the original proceedings.

(3) Any person aggrieved by the action of the director or authorized representative of the director in denying a request for reconsideration may, within 15 days after the denial of such request, file with the director or his authorized representative a written request for review.

(4) Any person aggrieved by the reconsidered determination of the director or authorized representative of the director, may within 15 days after such determination, file with the director a written request for review.

(5) A request for review shall be granted where reasonable grounds for the review are set forth in the request.

(6) If a request for reconsideration or review is granted, all interested persons shall be afforded an opportunity to present their views.

(7) No cargo gear certification function shall be performed by any person seeking reconsideration or review under this section pending the final decision with respect to such reconsideration or review.

[Order 74-25, § 296-304-14013, filed 5/7/74.]

WAC 296-304-150 Duties of persons accredited to certificate vessels' cargo gear—Scope and application. All sections of this chapter which include WAC 296-304-150 in the section number apply to duties of persons accredited to certificate vessels' cargo gear.

[Order 74-25, § 296-304-150, filed 5/7/74.]

WAC 296-304-15001 General duties—Exemptions. (1) Except as noted in WAC 296-304-13501 and 296-304-15001(8), the requirements set forth in WAC 296-304-160 through 296-304-16025 and 296-304-170 through 296-304-17023 shall be strictly adhered to in all testing, examinations, inspections and heat treatments.

(2) Supervision of all testing, examinations, inspections, and heat treatments shall be carried out only by such persons as are listed in the application for accreditation or subsequent supplements thereto, submitted pursuant to this section.

(3) The certificates issued by an accredited person shall be signed and all register entries made only by an authorized agent of such accredited person. No certification shall be issued until any deficiencies considered by the accredited person to constitute a currently unsatisfactory condition have been corrected. Replacement parts shall be of equal or better quality as original equipment and suitable for the purpose. In the event deficiencies remain uncorrected and no certification may therefore be issued, the accredited person shall inform the nearest district office of the department of labor and industries of the circumstances.

(4) Dynamometers or other recording test equipment owned by an accredited person shall have been tested for accuracy within the six months next preceding application for accreditation or renewal of same. Such test shall be performed with calibrating equipment which has been checked in turn so that indications are traceable to the U.S. Bureau of Standards. A copy of test reports shall accompany the application. Where test equipment is not the property of the accredited person, that person shall not issue any certificate based upon the use of such equipment unless its owner has made available a certificate of accuracy based on the requirements of this section, obtained within 1 year prior to such use, and stating the errors of the equipment. Reasonable standards of accuracy shall be met and proof loads adjusted as necessary.

(5) An accredited person shall, upon request, provide the nearest local office of the department of labor and industries with advance information as to scheduled testing or of such other functions as are performed and facilitate the department of labor and industries observation of any such activities as it may desire to witness: Provided, however, That tests need not be delayed, except when specifically requested by the department of labor and industries under unusual circumstances.

(6) All cargo gear registers or certificates issued by an accredited person shall be made on forms prescribed or approved by the department of labor and industries.

(7) Unless otherwise instructed by the director in specific instances, any person accredited under WAC 296-304-14007(1) shall accept certificates relating to loose gear or wire rope tests or to heat treatments which are issued by the manufacturer of the gear concerned, by another person accredited specifically by the director for this purpose, or by any other person whose certificates are acceptable to the department of labor and industries. Such certificates shall

either be attached as a part of the vessel's certification or shall be used as the basis for the issuance of the accredited person's own loose gear, wire rope, or heat treatment certificates. In the latter case, the original certificates shall be kept on file by the accredited person as part of the permanent record of the vessel concerned.

(8) In case of practical difficulties or unnecessary hardships, the director in his discretion may grant exemptions from any provision of WAC 296-304-150 through 296-304-15005, 296-304-160 through 296-304-16025 and 296-304-170 through 296-304-17023.

[Order 74-25, § 296-304-15001, filed 5/7/74.]

WAC 296-304-15003 Recordkeeping and related procedures concerning records in custody of accredited persons. (1) An accredited person shall maintain records of all work performed under WAC 296-304-160 through 296-304-16025 and 296-304-170 through 296-304-17023.

(2) An accredited person shall maintain a continuous record of the status of the certification of each vessel issued a register by such person.

(3) The records required in (1) and (2) of this section shall be available for examination by the director.

(4) When annual or quadrennial tests, inspections, examinations, or heat treatments are performed by an accredited person, other than the person who originally issued the vessel's register, such accredited person shall furnish copies of any certificates issued and information as to register entries to the person originally issuing the register.

(5) An accredited person shall inform the nearest local office of the department of labor and industries whenever a vessel is initially certificated under these regulations and a register in the prescribed form has been issued.

(6) A copy of each certificate relating to unit tests or thorough examinations, except those issued by the manufacturer and those issued by accredited persons outside of the United States, shall be sent to the nearest local office of the department of labor and industries within 10 days after issuance. Such records shall form a part of the department of labor and industries file on the accredited person.

(7) An accredited person shall promptly notify the nearest local office of the department of labor and industries with respect to any changes in technical personnel, in fee schedules in geographical areas in which operations are conducted, or other pertinent substantial changes in its organization or operations.

[Order 74-25, § 296-304-15003, filed 5/7/74.]

WAC 296-304-15005 Recordkeeping and related procedures concerning records in custody of the vessel. (1) A fully completed and up-to-date register shall be kept in the form prescribed or approved by the department of labor and industries, giving the particulars required with respect to:

(a) The inspections and thorough examinations required by WAC 296-304-16005 (1) and (2).

(b) The thorough examinations required by WAC 296-304-16005(3).

(c) The thorough examinations required by WAC 296-304-16009.

(d) The heat treatment required by WAC 296-304-16007(1) and (2), and 296-304-16013.

(2) Certificates in the form prescribed or approved by the department of labor and industries shall be kept up-to-date, be attached to the register, and shall contain the particulars required with respect to:

(a) The testing and examinations required by WAC 296-304-16003, 296-304-16005(1) and 296-304-16013.

(b) The heat treatment required by WAC 296-304-16007 and 296-304-16013.

(3) The certificates and entries in the register shall be signed by a person qualified under WAC 296-304-17023.

(4) Adequate means shall be provided to enable persons examining the register, or any certificate attached thereto, to identify items of cargo gear referred to therein. Small items of gear, such as shackles, shall bear a mark to indicate that they have been initially tested.

(5) Records shall be kept aboard vessels identifying wire rope or articles of loose gear obtained from time to time and required to be certificated under the regulations of this section.

(6) An accredited person shall instruct the vessel's officers or the vessel's operator if the vessel is unmanned, that the vessel's register and certificates shall be preserved for at least 4 years after the date of the latest entry except in the case of nonrecurring test certificates concerning gear which is kept in use for a longer period, in which event the pertinent certificates shall be retained so long as that gear is continued in use.

(7) In cases where derricks, spouts, suckers, or cranes are mounted permanently aboard barges which remain in domestic inland waters service, the certification documentation shall comply with the provisions of WAC 296-304-20025.

[Order 74-25, § 296-304-15005, filed 5/7/74.]

WAC 296-304-160 Certification of vessels' cargo gear—Scope and application. All sections of this chapter which include WAC 296-304-160 in the section number apply to certification of vessels' cargo gear.

[Order 74-25, § 296-304-160, filed 5/7/74.]

WAC 296-304-16001 General. (1) Except as noted in WAC 296-304-13501 and as provided in exemptions under WAC 296-304-15001(9), certification performed by accredited persons shall conform to the requirements contained in this section.

(2) Safe working loads assigned to assembled units of gear shall be based on applicable design criteria acceptable to the accredited person. Where no design data on which to base a rating is obtainable, the safe working load ratings assigned shall be based on the owner's information and warranty that those so assigned are correct. Unit test certificates shall state the basis for any such safe working load assignment.

[Order 74-25, § 296-304-16001, filed 5/7/74.]

WAC 296-304-16003 Initial tests of cargo gear and tests after alterations, renewals or repairs. (1) Before being taken into use, hoisting machines, fixed gear aboard vessels accessory thereto, and loose gear and wire rope used in connection therewith, shall be tested and examined and the

safe working load thereof certified in the manner set forth in WAC 296-304-170 through 296-304-17023.

(2) Replacement or additional loose gear and wire rope obtained from time to time shall also be tested and examined in the manner set forth in WAC 296-304-16003(1). However, the replacement of a component part of an article of loose gear, such as a sheave, pin, or bushing does not require a new test certificate so long as the new component at least equals in all particulars the part replaced.

(3) In the case of untested gear which has been in use, an initial test in conformance with WAC 296-304-16003(1) shall be carried out: Provided, however, That existing standing rigging and wire rope will not be required to be tested but shall be thoroughly examined to ascertain its fitness for continued use in conformance with the requirements of WAC 296-304-16023 and 296-304-16025.

(4) In the case of important alterations or renewals of the machinery and gear and also after repairs due to failure of or damage to other than loose components, a test as required in WAC 296-304-16003(1) shall be carried out.

(5) If the operation in which cargo gear is engaged never utilizes more than a fraction of the safe working load rating, the owner may, at his option, have said gear certificated for, and limited in operation to, a lesser maximum safe working load: Provided, however, That the gear concerned is physically capable of operation at the original load rating and the load reduction is not for the purpose of avoiding correction of any deficiency.

(6) In no case shall safe working loads be increased beyond the original design limitations unless such increase is based on engineering calculations by or acceptable to the accredited certification agency, and all necessary structural changes are carried out.

[Order 74-25, § 296-304-16003, filed 5/7/74.]

WAC 296-304-16005 Periodic tests, examinations and inspections. After being taken into use, every hoisting machine, all fixed gear aboard vessels accessory thereto and loose gear used in connection therewith, shall be tested, thoroughly examined or inspected as follows:

(1) Derricks with their winches and accessory gear, including the attachments, as a unit; and cranes and other hoisting machines with their accessory gear, as a unit, shall be tested and thoroughly examined every four years in the manner set forth in WAC 296-304-170 through 296-304-17023.

(2) Derricks, their permanent attachments and any other fixed gear the dismantling of which is especially difficult shall be visually inspected every twelve months. In order to facilitate such inspection all derricks shall be lowered.

(3) All hoisting machines (e.g., cranes, winches), blocks, shackles, and all other accessory gear not included in WAC 296-304-16005(2), shall be thoroughly examined every twelve months by means of a visual examination, supplemented as necessary by other means, such as a hammer test or with electronic, ultrasonic, or other nondestructive methods, carried out as carefully as conditions permit in order to arrive at a reliable conclusion as to the safety of the parts examined. Particular attention shall be paid to the suitability for continued use of all swivels and the pins and bushing of blocks. If necessary, parts of the machines or gear shall be dismantled. If blocks are disassembled, all shell bolt nuts shall be securely locked upon reassembly.

(4) Where a derrick or crane is mounted on a barge hull and ballast tanks within the hull are used to facilitate use of the derrick or crane, or uncontrolled free surface may be a factor, each annual inspection or examination, as required, shall include such inspection as is necessary for the purpose of determining the integrity of any internals contributing to stability under conditions of use. The owner shall provide the accredited person with necessary information on any ballasting arrangements required.

(5) Annual inspection or examination, as required, shall include, among other things, examination of the following:

(a) Derrick heel attachment points. Heel pins may, if possible, be examined by nondestructive examination.

(b) Shrouds and stays necessary in the use of the gear, together with attachment points.

(c) Deck fittings for the securing of vangs, topping lifts, and/or preventers.

(d) Means of attachment to the hull of "A" frame or other fixed derrick or crane structure and of mobile types of equipment permanently placed aboard the barge or vessel.

(e) Clamshell buckets or other similar equipment, such as magnets, etc., used in conjunction with a derrick or crane mounted aboard a vessel, with particular attention to closing line wires and sheaves. The accredited person may supplement such examination by requesting any operational tests he may deem appropriate.

(f) Winch and other operating drums for excessive wear or defect.

[Order 74-25, § 296-304-16005, filed 5/7/74.]

WAC 296-304-16007 Heat treatment. (1) All chains (other than bridle chains attached to derricks or masts), rings, hooks, shackles, and swivels made of wrought iron, which are used in hoisting or lowering, shall be annealed in accordance with WAC 296-304-17021 at the following intervals:

(a) Half inch and smaller chains, rings, hooks, shackles, and swivels in general use, at least once every six months; and

(b) All other chains, rings, hooks, shackles, and swivels in general use, at least once every twelve months.

(c) In the case of gear used solely on lifting machinery worked by hand, twelve months shall be substituted for six months in WAC 296-304-16007 (1)(a) and two years for twelve months in WAC 296-304-16007 (1)(b).

(d) When used in this paragraph, the term "in general use" means used on fifty-two or more days in a year. In any case, however, the period between annealings shall not exceed two years.

(2) Chains, rings, hooks, shackles, and swivels made of material other than wrought iron or steel shall be heat treated when necessary in accordance with WAC 296-304-17021(2).

[Order 74-25, § 296-304-16007, filed 5/7/74.]

WAC 296-304-16009 Exemptions from heat treatment. Gear made of steel, or gear which contains (as in ball bearing swivels), or is permanently attached to (as with blocks), equipment made of materials which cannot be sub-

jected to heat treatment, shall be exempt from the requirements of WAC 296-304-16007. Such gear, however, shall be thoroughly examined in the manner described in WAC 296-304-16005(3).

[Order 74-25, § 296-304-16009, filed 5/7/74.]

WAC 296-304-16011 Grace periods. Grace periods allowed in connection with the requirements of this section are as follows:

(1) Annual or six-month requirements - by the end of the voyage during which they become due;

(2) Quadrennial requirements - within six months after the date when due;

(3) Grace periods shall not be deemed to extend subsequent due dates.

[Order 74-25, § 296-304-16011, filed 5/7/74.]

WAC 296-304-16013 Gear requiring welding. Chains or other gear which have been lengthened, altered or repaired by welding, shall be properly heat treated where necessary, and, before again being put into use, shall be tested and reexamined in the manner set forth in WAC 296-304-170 through 296-304-17023.

[Order 74-25, § 296-304-16013, filed 5/7/74.]

WAC 296-304-16015 Damaged components. (1) Pursuant to WAC 296-304-18003, any derrick or associated permanent fitting which is deformed in service between surveys shall be subjected to proof test to determine its suitability for continued service. If a proof test indicates that the derrick or associated permanent fitting may be continued in service without repair, a note of the existing deformity shall be made on the test certificate. When, in the opinion of the accredited person, it is unsafe to conduct a proof test with an existing deformity, the derrick or associated permanent fitting shall be replaced or repaired and then subjected to proof test in accordance with WAC 296-304-170 through 296-304-17023.

(2) Any loose gear components which are injured or deformed by a proof load shall be replaced before a certificate is issued.

(3) Any derrick, other fixed installation, or associated permanent fitting, which is injured or deformed by a proof load shall be replaced or repaired and another proof load test shall be conducted without damage before a certificate is issued.

[Order 74-25, § 296-304-16015, filed 5/7/74.]

WAC 296-304-16017 Marking and posting of safe working loads. (1) The safe working load of the assembled gear and the minimum angle to the horizontal at which this load may be applied shall be plainly marked at the heels of all booms along with the date of the test. Where gear is certificated for use in union purchase, the union purchase safe working load shall also be plainly marked. Any limitations shall be noted in the vessel's papers.

(2) The safe working load shall be marked on all blocks used in hoisting or lowering.

(3) When the capacity of the boom of a crane or derrick has been or will be rated in accordance with the variance of its radius, the maximum safe working loads for the various working angles of the boom and the maximum and minimum radius at which the boom may be safely used, shall be conspicuously posted near the controls and visible to the crane operator. Ratings may be stated in pounds. When they are stated in tons of 2,000 pounds, this fact shall be indicated.

[Order 74-25, § 296-304-16017, filed 5/7/74.]

WAC 296-304-16019 Requirements governing braking devices and power sources. All types of winches and cranes shall be provided with means to stop and hold the proof load in any position, and the efficiency of such means shall be demonstrated. Electric winches, electrohydraulic winches fitted with electromagnetic or hydraulic brakes at the winch, or electric cranes, shall be equipped so that a failure of the electric power shall stop the motion and set the brakes without any action on the part of the operator. Current for operation of electric winches and cranes during the tests shall be taken from the vessel's circuits. Shore current may be used if it passes through the vessel's main switchboard.

[Order 74-25, § 296-304-16019, filed 5/7/74.]

WAC 296-304-16021 Means of derrick attachment. Appropriate measure shall be taken to prevent the foot of a derrick from being accidently lifted from its socket or support during the test.

[Order 74-25, § 296-304-16021, filed 5/7/74.]

WAC 296-304-16023 Limitations on use of wire rope. (1) An eye splice made in any wire rope shall have at least three tucks with a whole strand of rope and two tucks with one-half of the wires cut out of each strand. However, this requirement shall not operate to preclude the use of another form of splice or connection which can be shown to be as efficient.

(2) Except for eye splices in the ends of wires, each wire rope used in hoisting or lowering, in guying derricks, or as a topping lift, preventer or pendant, shall consist of one continuous piece without knot or splice.

(3) Eyes in the ends of wire rope cargo falls shall not be formed by knots and, in single part falls, shall not be formed by wire rope clips.

(4) The ends of falls shall be secured to the winch drums by clamps, U-bolts, shackles or some other equally strong method. Fiber rope fastenings shall not be used.

(5) Wire rope shall not be used for the vessel's cargo gear if in any length of eight diameters, the total number of visible broken wires exceeds 10 percent of the total number of wires, or if the rope shows other signs of excessive wear, corrosion, or defect. Particular attention shall be given to the condition of those sections of wire rope adjacent to any terminal connections, those sections exposed to abnormal wear, and those sections not normally exposed for examination.

[Order 74-25, § 296-304-16023, filed 5/7/74.]

WAC 296-304-16025 Limitations on use of chains. Chains forming a part of vessel's cargo gear shall not be used when, due to stretch, the increase of length of a measured section exceeds five percent, when a link is damaged, or when other external defects are evident. Chains shall not be shortened by bolting, wiring, or knotting.

[Order 74-25, § 296-304-16025, filed 5/7/74.]

WAC 296-304-170 Certification of vessels—Tests and proof loads—Heat treatment—Competent persons—Scope and application. All sections of this chapter which include WAC 296-304-170 in the section number apply to certification of vessels: Tests and proof loads; heat treatment; competent persons.

[Order 74-25, § 296-304-170, filed 5/7/74.]

WAC 296-304-17001 Visual inspection before tests. Before any test under this WAC 296-304-170 through 296-304-17023 is carried out, a visual inspection of the gear involved shall be conducted and any visibly defective gear shall be replaced or repaired. The provisions of WAC 296-304-16005(4) shall be adhered to.

[Order 74-25, § 296-304-17001, filed 5/7/74.]

WAC 296-304-17003 Unit proof test—Winches, derricks and gear accessory thereto. (1) Winches, with the whole of the gear accessory thereto (including derricks, goosenecks, eye plates, eye bolts, or other attachments), shall be tested with a proof load which shall exceed the safe working load as follows:

Safe working load	Proof load
Up to 20 tons	25 percent in excess.
20-50 tons	5 tons in excess.
Over 50 tons	10 percent in excess.

(2) The proof load shall be lifted with the vessel's normal tackle with the derrick at an angle not more than 15 degrees to the horizontal, or, at the designed minimum angle when this is greater, or, when this is impracticable, at the lowest practicable angle. The angle at which the test was made shall be stated in the certificate of test. After the proof load has been lifted, it shall be swung as far as possible in both directions. In applying the proof load, the design factors of the gear concerned will determine whether the load is applied with a single part fall or with a purchase and the certificate of test shall state the means used. Where winches are fitted with mechanical brakes for manual operation they shall be demonstrated to be in satisfactory operating condition.

(3) In the case of heavy lift derrick barges, proof loads shall be applied, except as limited by design and stability considerations, at the maximum and minimum radius for which designed, as well as at any intermediate radius which the surveyor may deem necessary, and shall be swung as far as possible in both directions. Data with respect to each proof load applied shall be entered in the test certificate.

(4) No items of cargo gear furnished by outside sources shall be used as a part of the vessel's gear for the purpose of accomplishing the proof test.

(5) All tests prescribed by this section should in general be carried out by dead load, except that in the case of quadrennial tests, replacements, or renewals, spring or hydraulic balances may be used where dead loads are not reasonably available. However, no exception shall be allowed in the case of gear on new vessels.

(6) The test shall not be regarded as satisfactory unless the indicator remains constant under the proof load for a period of at least 5 minutes.

(7) The safe working load, determined pursuant to the requirements of this section, shall be applicable only to a swinging derrick. When using two fixed derricks in "union purchase" rigs, the safe working load should generally be reduced. It is recommended that owners obtain union purchase safe working load certification based upon design study and analysis by, or acceptable to, a qualified technical office of an accredited gear certification agency, with the recognition that such determinations are valid only for the conditions contemplated in the analysis.

(a) Where both guys and preventers are fitted, union purchase certification shall state whether the guy or the preventer is the working strength member, when the guy is for slewing only, and when the guy and preventor should share working loads as far as practicable.

(8) When necessary in the proof testing of heavy derricks, the appropriate shrouds and stays shall be rigged.

[Order 74-25, § 296-304-17003, filed 5/7/74.]

WAC 296-304-17005 Unit proof tests—Cranes and gear accessory thereto. (1) Except as noted in WAC 296-304-17005(5), cranes and other hoisting machines, together with gear accessory thereto, shall be tested with a proof load which shall exceed the safe working load as follows:

Safe working load	Proof load
Up to 20 tons	25 percent in excess.
20-50 tons	5 tons in excess.
Over 50 tons	10 percent in excess.

(2) The proof load shall be lifted and swung as far as possible in both directions. If the jib or boom of the crane has a variable radius, it shall be tested with proof loads, as specified in WAC 296-304-17005(1), at the maximum and minimum radius. In the case of hydraulic cranes, when owing to the limitation of pressure it is impossible to lift a load 25 percent in excess of the safe working load, it will be sufficient to lift the greatest possible load.

(3) Initial proof tests of new cranes shall be made only with a dead load as specified in WAC 296-304-17005(2).

(4) Initial tests of cranes which have been in service, quadrennial tests, or tests associated with replacements or renewals, may be made with spring or hydraulic balances where dead loads are not reasonably available, under the following conditions:

(a) Tests shall be conducted at maximum, minimum, and intermediate radius points, as well as such points in the arc of rotation as meet with the approval of the accredited person.

(b) An additional test shall be conducted with partial load and shall include all functions and movements contemplated in the use of the crane.

(5) In cases where shore-type cranes are mounted permanently aboard barges, the requirements of WAC 296-304-170 through 296-304-17023 with respect to unit proof tests and examinations shall not apply and the applicable requirements of WAC 296-304-200 through 296-304-20025 shall be adhered to with respect to unit proof tests and examinations.

[Order 74-25, § 296-304-17005, filed 5/7/74.]

WAC 296-304-17007 Limitations on safe working loads and proof loads. The proof loads specified in WAC 296-304-17003 and 296-304-17005 shall be adjusted as necessary to meet any pertinent limitations based on stability and/or on structural competence at particular radii. Safe working loads shall be reduced accordingly.

[Order 74-25, § 296-304-17007, filed 5/7/74.]

WAC 296-304-17009 Examinations subsequent to unit tests. (1) After satisfactory completion of the unit proof load tests required by WAC 296-304-17003 and 296-304-17005, the cargo gear and all component parts thereof shall be given a thorough visual examination, supplemented as necessary by other means, such as a hammer test or with electronic, ultrasonic, or other nondestructive methods, to determine if any of the parts were damaged, deformed, or otherwise rendered unsafe for further use.

(2) When the test of gear referred to in WAC 296-304-17008(1) is being conducted for the first time on a vessel, accessory gear shall be dismantled or disassembled for examination after the test. The sheaves and pins of the blocks included in this test need not be removed unless there is evidence of deformation or failure.

(3) For subsequent tests such parts of the gear shall be dismantled or disassembled after the test as necessary to determine their suitability for continued service.

(4) When blocks are disassembled all shell bolt nuts shall be securely locked upon reassembly.

(5) In carrying out the requirements of this section, replacement shall be required of:

(a) Any swivel found to have excessive tolerance as a result of wear on any bearing surface.

(b) Pins of blocks found to be shouldered, notched, or grooved from wear, in which case, in addition to replacing the pin, sheave bushings shall be examined for suitability for continued use.

[Order 74-25, § 296-304-17009, filed 5/7/74.]

WAC 296-304-17011 Proof tests—Loose gear. (1) Chains, rings, shackles and other loose gear (whether accessory to a machine or not) shall be tested with a proof load equal to that shown against the article in the following table:

Article of gear	Proof load
Chain, ring, hook, shackle or swivel	100 percent in excess of the safe working load.
Blocks:	
Single sheave block	300 percent in excess of the safe working load.[1]
Multiple sheave block with safe working load up to and including 20 tons	100 percent in excess of the safe working load.
Multiple sheave block with safe working load over 20 tons up to and including 40 tons	20 tons in excess of the safe working load.
Multiple sheave block with safe working load over 40 tons	50 percent in excess of the safe working load.
Pitched chains used with hand-operated blocks and rings, hooks, shackles or swivels permanently attached thereto.	50 percent in excess of the safe working load.
Hand-operated blocks used with pitched chains and rings, hooks, shackles or swivels permanently attached thereto	50 percent in excess of the safe working load.

[1]The proof load applied to the block is equivalent to twice the maximum resultant load on the eye or pin of the block when lifting the nominal safe working load defined in WAC 296-304-17011 (1)(a) below. The proof load is, therefore, equal to four times the safe working load as defined in WAC 296-304-17011 (1)(a) below or twice the safe working load as defined in WAC 296-304-17011 (1)(b) below.

(a) The nominal safe working load of a single-sheave block should be the maximum load which can be safely lifted by the block when the load is attached to a rope which passes around the sheave of the block.

(b) In the case of a single-sheave block where the load is attached directly to the block instead of to a rope passing around the sheave, it is permissible to lift a load equal to twice the nominal safe working load of the block as defined in WAC 296-304-17011 (1)(a) above.

(c) In the case of a lead block so situated that an acute angle cannot be formed by the two parts of the rope passing over it (i.e., the angle is always 90° or more), the block need not have a greater nominal safe working load than one-half the maximum resultant load which can be placed upon it.

(2) In cases where persons accredited to carry out loose gear tests may be retained to conduct tests of special stevedoring gear as described in WAC 296-56-45001(2), which does not form part of a vessel's equipment, such tests shall adhere to the requirements set forth in WAC 296-56-45001 (2)(a), (b) and (c).

(3) After being tested as required by WAC 296-304-17011(1), and before being taken into use, all chains, rings, hooks, shackles, blocks or other loose gear, except as noted in WAC 296-304-17013, shall be thoroughly examined, the sheaves and pins of the blocks being removed for this purpose, to determine whether any part has been injured or permanently deformed by the test. Shell bolt nuts shall be securely locked upon reassembly. Defective loose gear components shall be replaced before the certificate is issued.

(4) Any certificate relating to shackles, swivels or strength members of single-sheave blocks which have been restored to original dimensions by welding shall state this fact.

[Order 74-25, § 296-304-17011, filed 5/7/74.]

WAC 296-304-17013 Specially designed blocks and components. (1) Blocks and connecting components of an unusual nature which are specially designed and constructed

as an integral part of a particular lifting unit and are either permanently affixed or of such design that two or more components must be tested together need not be considered as loose gear for purposes of WAC 296-304-17011.

(2) In lieu of the loose gear proof test required by WAC 296-304-17011(1), design data shall be submitted to an accredited certification agency indicating design and material specifications and analysis whereby the designed strength of such gear may be determined.

(3) Subsequent to the test of the lifting unit as a whole, a thorough visual examination shall be made of disassembled parts and an electronic, ultrasonic, or other equally efficient nondestructive examination shall be made of those parts not dismantled to ensure the safe condition of such parts.

[Order 74-25, § 296-304-17013, filed 5/7/74.]

WAC 296-304-17015 Proof tests—Wire rope. Wire rope, except as provided in WAC 296-304-16003(2), shall be tested by sample, a piece being tested to destruction, and the safe working load of running ropes, unless otherwise acceptable to the department of labor and industries on the basis of design, shall not exceed one-fifth of the breaking load of the sample tested. In the case of running ropes used in gear with a safe working load exceeding 10 tons, the safe working load shall not exceed one-fourth of the breaking load of the sample tested.

[Order 74-25, § 296-304-17015, filed 5/7/74.]

WAC 296-304-17017 Proof tests after repairs or alterations. When proof loads are applied after repairs or alterations, all parts of the assembled gear shall be examined as required in WAC 296-304-17009, 296-304-17011(3), or 296-304-17013(c), whichever is applicable.

[Order 74-25, § 296-304-17017, filed 5/7/74.]

WAC 296-304-17019 Order of tests. When both unit and loose gear proof load tests are required, the loose gear test may be carried out after completion of the unit test.

[Order 74-25, § 296-304-17019, filed 5/7/74.]

WAC 296-304-17021 Heat treatment. (1) The annealing of wrought iron gear required by this section shall be accomplished at a temperature between 1100° and 1200°F. and the exposure shall be of between thirty and sixty minutes duration. After being annealed, the gear shall be allowed to cool slowly and shall then be carefully inspected. All annealing shall be carried out in a closed furnace.

(2) When heat treatment of loose gear made of other than wrought iron or steel is recommended by the manufacturer, it shall be carried out in accordance with the specifications of the manufacturer.

[Order 74-25, § 296-304-17021, filed 5/7/74.]

WAC 296-304-17023 Competent persons. All gear certification functions shall be performed by competent persons as set forth in the following table:

Functions	Competent person
Any testing, examination, inspection, or heat treatment required in United States ports.	Responsible individual, surveyor or other authorized agent of a person accredited by the department of labor and industries under the regulations contained in this part.
Any testing, examination, inspection, or heat treatment required to be performed while the vessel is in other than United States ports.	Responsible individual, surveyor or other authorized agent of persons recognized by the Commandant of the United States Coast Guard or by a foreign nation whose certification is accepted by the department of labor and industries as being in substantial accordance with WAC 296-304-15005(1).
Testing, examination and inspection of loose gear or wire rope; heat treatment of loose gear.	Employees or authorized agents of persons accredited specifically by the department of labor and industries for this purpose under the regulations contained in this section, or the manufacturer of the gear concerned unless disapproved by the director.

[Order 74-25, § 296-304-17023, filed 5/7/74.]

WAC 296-304-180 Accreditation to certificate shore-based equipment—Scope and application. All sections of this chapter which include WAC 296-304-180 in the section number apply to accreditation to certificate shore-based equipment.

[Order 74-25, § 296-304-180, filed 5/7/74.]

WAC 296-304-18001 Eligibility for accreditation to certificate shore-based material handling devices covered by chapter 296-56 WAC of the safety and health regulations for longshoring. (1) A person applying for accreditation to carry out certification activities and to issue and maintain the requisite records must be:

(a) A manufacturer of cranes or derricks or of specialized equipment of the type for which accreditation application is made, or a person or organization representing such a manufacturer in a technical capacity; or

(b) Technically experienced and qualified to carry out examinations and/or testing, as applicable, of vessels or

shore-based equipment or gear of the type for which accreditation application is made.

(2) The owner of shore-based equipment affected may designate a member of his organization to carry out certification functions respecting the owner's equipment, on the following conditions:

(a) The designee is technically experienced and qualified in the inspection and maintenance or design of the type of equipment involved, aside from employment as an operator only.

(b) The designee has applied to an accredited, nationally operating certification agency and has been granted appointment or equivalent recognition by that agency as a surveyor for the purpose intended.

(c) Certification activities carried out by the designee are cleared through the offices, and are subject to the approval, of the accredited certificating agency. When equipment is found satisfactory for use upon any survey, said equipment may be used pending receipt of notification of such approval or any disapproval.

(d) In cases where equipment is certificated by a person designated by the equipment owner, the cognizant accredited certification agency retains the right to inspect such equipment as desired and convenient, in order to ascertain the adequacy of the certification activity performed.

(3) Accreditation to conduct such nondestructive examination as may be a part of any certification activity may be granted to applicants found competent and equipped to carry out this activity.

(4) Unless exemptions are granted at the discretion of the director in cases of practical difficulties or unnecessary hardship, applicants for accreditation as specified in this section shall be prepared to carry out all necessary functions, except that any requisite wire rope tests, nondestructive examinations, and heat treatments may be carried out by the manufacturer of the gear concerned or by another person accredited specifically for these purposes.

(5) A person applying for accreditation shall have a satisfactory record of relevant experience and performance.

[Order 74-25, § 296-304-18001, filed 5/7/74.]

WAC 296-304-18003 Provisions respecting application for accreditation, action upon the application, and related matters. The provisions of WAC 296-304-14001, 296-304-14003, 296-304-14005, 296-304-14009, 296-304-14011 and 296-304-14013 shall govern accreditation to certificate shore-based material handling devices, to the extent applicable.

[Order 74-25, § 296-304-18003, filed 5/7/74.]

WAC 296-304-190 Duties of persons accredited to certificate shore-based material handling devices—General duties, exemptions. The requirements of WAC 296-304-200 through 296-304-20025 shall be strictly observed: Provided, however, That in cases of practical difficulties or unnecessary hardship, the director in his discretion may grant exemptions or variations from any provision in that section.

(1) Except as otherwise noted in this section, all functions required by WAC 296-304-200 through 296-304-20025 shall be carried out by or under the supervision of a person accredited for the purpose or by his authorized representative.

(2) All required unit proof load tests shall be carried out by the use of weights as a dead load. Only where this is not possible may dynamometers or other recording test equipment be used. Any such recording test equipment owned by an accredited person shall have been tested for accuracy within the 6 months next preceding application for accreditation or renewal thereof. Such test shall be performed with calibrating equipment which has been checked in turn so that indications are traceable to the U.S. Bureau of Standards. A copy of test reports shall accompany the accreditation application. Where test equipment is not the property of the accredited person, that person shall not issue any certificate based upon the use of such equipment unless its owner has made available a certificate of accuracy based on the requirements of this section, obtained within the year prior to such use, and stating the errors of the equipment. In any event reasonable standards of accuracy shall be met and proof loads adjusted as necessary.

(3) The qualifications of any person appointed or recognized by any accredited person for the purpose of carrying out certification functions shall meet with the approval of the director.

(4) WAC 296-304-15001 (5) and (7) and 296-304-15003 shall govern, to the extent applicable, persons accredited under WAC 296-304-180 through 296-304-18003.

[Order 74-25, § 296-304-190, filed 5/7/74.]

WAC 296-304-200 Certification of shore-based material handling devices—Scope and application. All sections of this chapter which include WAC 296-304-200 in the section number apply to certification of shore-based material handling devices.

[Order 74-25, § 296-304-200, filed 5/7/74.]

WAC 296-304-20001 General provisions. (1) Certification of shore-based material handling devices shall conform to the requirements contained in this section, except in cases for which exemptions or variations have been granted by the director as provided in WAC 296-304-18001(4) and 296-304-19001(1).

(2) Any replacements or repairs deemed necessary by the accredited person shall be carried out before application of a proof test.

(3) "Ton" in this section means a ton of 2,000 pounds.

(4) When applied to shore-based material handling devices, ratings may be stated in pounds rather than tons. When stated in tons of 2,000 pounds, this fact shall be indicated.

[Order 74-25, § 296-304-20001, filed 5/7/74.]

WAC 296-304-20003 Unit proof test and examination of cranes. (1) Unit proof tests of cranes shall be carried out at the following times:

(a) In the cases of new cranes, before initial use and every 4 years thereafter.

(b) In the cases of uncertificated cranes which have been in use, at the time of initial certification and every 4 years thereafter.

(c) After important alterations and renewals, and after repairs due to failure of, or damage to, major components.

(2) Unit proof load tests of cranes shall be carried out where applicable with the boom in the least stable direction relative to the mounting, based on the manufacturer's specifications.

(3) Unit proof load tests shall be based on the manufacturer's load ratings for the conditions of use and shall, except in the case of bridge type cranes utilizing a trolley, consist of application of a proof load of 10 percent in excess of the load ratings at maximum and minimum radius, and at such intermediate radii as the certificating authority may deem necessary in the circumstances.[1] Trolley equipped cranes shall be subject to a proof load of 25 percent in excess of the manufacturer's load rating. In cases of foreign manufacture, the manufacturer's specifications shall be subject to approval by the certificating authority as being equivalent to U.S. practice.

[1]The manufacturer's load ratings are usually based upon percentage of tipping loads under some conditions and upon limitations of structural competence at others, as well as on other criteria such as type of crane mounting, whether or not outriggers are used, etc. Some cranes utilizing a trolley may have only one load rating assigned and applicable at any outreach. It is important that the manufacturer's ratings be used.

The weight of all auxiliary handling devices such as, but not limited to, magnets, hooks, slings, and clamshell buckets shall be considered part of the load.

(4) An examination shall be carried out in conjunction with each unit proof load test. The accredited person, or his authorized representative, shall make a determination as to correction of deficiencies found. The examination shall cover the following points as applicable:

(a) All functional operating mechanisms shall be examined for improper function, maladjustment, and excessive component wear, with particular attention to sheaves, pins, and drums. The examination shall include operation with partial load, in which all functions and movements, including, where applicable, maximum possible rotation in both directions, are performed.

(b) All safety devices shall be examined for malfunction.

(c) Lines, tanks, valves, drains, pumps, and other parts of air or hydraulic systems shall be examined for deterioration or leakage.

(d) Loose gear components, such as hooks, including wire rope and wire rope terminals and connections, shall be checked with particular attention to sections of wire rope exposed to abnormal wear and to sections not normally exposed for examination. The provisions of WAC 296-304-16023 shall apply in wire rope examinations. Cracked or deformed hooks shall be discarded and not reused on any equipment subject to the provisions of chapter 296-56 WAC longshoring and WAC 296-304-130 through 296-304-13503.

(e) Rope reeving shall comply with manufacturer's recommendations.

(f) Deformed, cracked, or excessively corroded members in crane structure and boom shall be repaired or replaced as necessary.

(g) Loose bolts, rivets, or other connections shall be corrected.

(h) Worn, cracked, or distorted parts affecting safe operation shall be corrected.

(i) Brake and clutch system parts, linings, pawls, and ratchets shall be examined for excessive wear and free operation.

(j) Load, boom angle, or other indicators shall be checked over their full range for any significant inaccuracy. A boom angle or radius indicator shall be fitted.

(k) It shall be ascertained that there is a durable rating chart visible to the operator, covering the complete range of the manufacturer's capacity ratings at all operating radii, for all permissible boom lengths and jib lengths, with alternate ratings for optional equipment affecting such ratings. Necessary precautions or warnings shall be included. Operating controls shall be marked or an explanation of controls shall be posted at the operator's position to indicate function.

(l) Where used, clamshell buckets or other similar equipment such as magnets, etc., shall be carefully examined in all respects, with particular attention to closing line wires and sheaves. The accredited person may supplement such examination by requesting any operational tests as may be appropriate.

(m) Careful examination of the junction areas of removable boom sections, particularly for proper seating, cracks, deformities, or other defects in securing bolts and in the vicinity of such bolts.

(n) It shall be ascertained that no counterweights in excess of the manufacturer's specifications are fitted.

(o) Such other examination or supplemental functional tests shall be made as may be deemed necessary by the accredited person under the circumstances.

[Order 74-25, § 296-304-20003, filed 5/7/74.]

WAC 296-304-20005 Annual examination of cranes. (1) In any year in which no quadrennial unit proof test is required, an examination shall be carried out by an accredited person or his authorized representative. Such examination shall be made not later than the anniversary date of the quadrennial certification and shall conform with the requirements of WAC 296-304-20003(4).

[Order 74-25, § 296-304-20005, filed 5/7/74.]

WAC 296-304-20007 Unit proof test and examination of derricks. (1) Unit proof tests of derricks shall be carried out at the same times as are specified in WAC 296-304-20003(1) for cranes.

(2) Unit proof load tests and safe working load ratings shall be based on the design load ratings at the ranges of boom angles or operating radii. Unit proof loads shall exceed the safe working load as follows:

Safe working load	Proof load
Up to 20 tons	25 percent in excess.
20-50 tons	5 tons in excess.
Over 50 tons	10 percent in excess.

Proof loads shall be applied at the designed maximum and minimum boom angles or radii, or, if this is impracticable, as close to these as practicable. The angles or radii of test shall be stated in the certificate of test. Proof loads shall be swung as far as possible in both directions. The weight of all auxiliary handling devices shall be considered a part of the load.

(3) After satisfactory completion of a unit proof load test the derrick and all component parts thereof shall be carefully examined in accordance with the requirements of WAC 296-304-20003(4), as far as applicable.

[Order 74-25, § 296-304-20007, filed 5/7/74.]

WAC 296-304-20009 Annual examination of derricks. (1) In any year in which no quadrennial unit proof test is required, an examination shall be carried out by an accredited person or his authorized representative. Such annual examination shall be made not later than the anniversary date of the quadrennial certification and shall conform in all applicable respects with WAC 296-304-20003(4).

[Order 74-25, § 296-304-20009, filed 5/7/74.]

WAC 296-304-20011 Determination of crane or derrick safe working loads and limitations in absence of manufacturer's data. (1) In the event neither manufacturer's data nor design data on safe working loads (including any applicable limitations) are obtainable, the safe working load ratings assigned shall be based on the owner's information and warranty that those so assigned are correct. Unit test certificates shall state the basis for any such safe working load assignment.

[Order 74-25, § 296-304-20011, filed 5/7/74.]

WAC 296-304-20013 Safe working load reduction. (1) If the operation in which equipment is engaged never utilizes more than a fraction of the safe working load rating, the owner of such equipment may, at his option, have the crane or derrick certificated for and operated at a lesser maximum safe working load in keeping with the use and based on radius and other pertinent factors: Provided, however, That the equipment concerned is physically capable of operation at the original load rating and the load reduction is not for the purpose of avoiding correction of any deficiency.

[Order 74-25, § 296-304-20013, filed 5/7/74.]

WAC 296-304-20015 Safe working load increase. (1) In no case shall safe working loads be increased beyond the manufacturer's ratings or original design limitations unless such increase meets with the manufacturer's approval. Where the manufacturer's services are not available, or where the equipment is of foreign manufacture, engineering design analysis by, or acceptable to, the accredited certification agency is required. All necessary structural changes shall be carried out.

[Order 74-25, § 296-304-20015, filed 5/7/74.]

WAC 296-304-20017 Nondestructive examination. (1) Wherever it is considered necessary by the accredited person or his authorized representative and wherever it is practical and advisable to avoid disassembly of equipment, removal of pins, etc., examination of structure or parts by electronic ultrasonic or other nondestructive methods may be carried out, provided that the procedure followed is acceptable to the director and the person carrying out such examination is accredited or acceptable to the director for the purpose.

[Order 74-25, § 296-304-20017, filed 5/7/74.]

WAC 296-304-20019 Wire rope. (1) Wire rope and replacement wire rope shall be of the same size, same or better grade, and same construction as originally furnished by the equipment manufacturer or contemplated in the design, unless otherwise recommended by the equipment or the wire rope manufacturer due to actual working condition requirements. In the absence of specific requirements as noted, wire rope shall be of a size and construction suitable for the purpose, and a safety factor of 4 shall be adhered to, and verified by wire rope test certificate.

(2) Wire rope in use on equipment previously constructed and prior to initial certification of said equipment shall not be required to be tested but shall be subject to thorough examination at the time of initial certification of the equipment.

[Order 74-25, § 296-304-20019, filed 5/7/74.]

WAC 296-304-20021 Heat treatment. (1) Wherever heat treatment of any loose gear is recommended by the manufacturer, it shall be carried out in accordance with the specifications of the manufacturer.

[Order 74-25, § 296-304-20021, filed 5/7/74.]

WAC 296-304-20023 Examination of bulk cargo loading or discharging spouts or suckers. (1) Those portions of bulk cargo loading or discharging spouts or suckers which extend over vessels, together with any portable extensions, rigging components, outriggers, and attachment points, supporting them or any of their components vertically, shall be examined annually. The examination shall be carried out with particular attention to the condition of wire rope and accessories. The equipment shall not be considered satisfactory unless, in the opinion of the accredited person or his authorized representative, it is deemed fit to serve its intended function.

[Order 74-25, § 296-304-20023, filed 5/7/74.]

WAC 296-304-20025 Documentation. (1) Documents issued respecting a certification function by an accredited person shall be on forms approved for such use by the director and shall so state.

(2) Such documents shall be issued by the accredited person to the owners of affected equipment, attesting to satisfactory compliance with applicable requirements. The forms used shall contain the following information:

(a) Unit proof tests where required—

(i) Identification of crane or derrick including manufacturer, model number, serial number, and ownership.

(ii) Basis for assignment of safe working load ratings, with the ratings assigned (i.e., whether based on manufacturer's ratings, whether for any specific service, etc.).

(iii) Proof test details noting radii and proof loads, how applied, and, where applicable, direction relative to mounting.

(iv) A statement that the test and associated examination were conducted and all applicable requirements of this section are met.

(v) Any necessary remarks or supplementary data, including limitations imposed and the reason therefor.

(vi) Name of accredited person and identification of authorized representative actually conducting test and/or examination.

(vii) Authorized signature of accredited person, date and place of test and/or examination.

(b) Annual examination of cranes or derricks—

(i) Information specified in WAC 296-304-20025 (2)(a)(i), (v), (vi) and (vii).

(ii) A statement that the required examination has been carried out and that, in the opinion of the accredited person or his authorized representative, the equipment has been found in compliance in all applicable respects with the requirements of this section.

(c) Annual examination of bulk cargo loadings or discharging spouts or suckers—

(i) Specific identification of equipment.

(ii) A statement that examination has been completed and that, in the opinion of the accredited person or his authorized representative, the equipment meets the criteria of WAC 296-304-20023(1).

(iii) Information specified in WAC 296-304-20025 (2)(a)(i), (v), (vi) and (vii).

(3) Certificates relating to wire rope, whether tested by or under the supervision of the accredited person or by its manufacturer and whether or not issued on the basis of the manufacturer's certificates, shall follow the general format of a wire rope test form approved by the director.

(4) Accredited persons shall advise owners of affected equipment of the necessity for maintaining required documentation or acceptable copies thereof available for inspection at or near the worksite of the equipment involved.

(a) Where initial and periodic tests as well as annual examinations are required, documentation available for inspection shall include the latest unit test certificate and any subsequent annual examination certificates, together with wire rope test certificates relating to any replacements since the last unit test or annual examination.

(b) Where only annual examination is required, documentation available for inspection shall include the latest annual examination certificate and wire rope test certificates relating to any wire replaced since the last annual examination.

(c) In the event that heat treatment of any loose gear is recommended by its manufacturer, the latest heat treatment certificate, attesting to compliance with the manufacturer's specifications, shall be part of the available documentation.

(5) No certification shall be issued until any deficiencies considered by the accredited person to constitute a currently unsatisfactory condition have been corrected. Replacement parts shall be of equal or better quality as original equipment and suitable for the purpose. In the event deficiencies remain uncorrected and no certification therefore is issued, the accredited person shall inform of the circumstances the nearest district office of the department of labor and industries.

[Order 74-25, § 296-304-20025, filed 5/7/74.]

Chapter 296-305 WAC
SAFETY STANDARDS FOR FIRE FIGHTERS

WAC

296-305-01001 Foreword.
296-305-01002 Effective date.
296-305-01003 Scope and application.
296-305-01005 Definitions.
296-305-01007 Variance and procedure.
296-305-01009 Appeals.
296-305-01501 Injury and illness reports for fire fighters.
296-305-01503 Accident investigation.
296-305-01505 Accident prevention program.
296-305-01507 Fire department safety officer.
296-305-01509 Management's responsibility.
296-305-01511 Employee's responsibility.
296-305-01513 Safe place standards.
296-305-01515 First-aid training and certification.
296-305-01517 First-aid kits.
296-305-02001 Personal protective equipment and protective clothing.
296-305-02003 Eye and face protection.
296-305-02005 Hearing protection.
296-305-02007 Hand protection.
296-305-02009 Body protection.
296-305-02011 Body armor.
296-305-02013 Foot protection for structural fire fighting.
296-305-02015 Head protection.
296-305-02017 Personal alert safety system (PASS) protection.
296-305-02019 Life safety ropes, harnesses, and hardware protection.
296-305-02501 Emergency medical protection.
296-305-03001 Hazardous materials protection.
296-305-04001 Respiratory equipment protection.
296-305-04501 Automotive fire apparatus design and construction.
296-305-04503 Automotive fire apparatus equipment.
296-305-04505 Automotive apparatus operational rules.
296-305-04507 Fire apparatus maintenance and repair.
296-305-04509 Aerial ladders.
296-305-04511 Elevated platforms.
296-305-05001 Emergency fireground operations—Structural.
296-305-05003 Confined space rescue operations.
296-305-05005 Rope rescue operations.
296-305-05007 Trench rescue operations.
296-305-05009 Watercraft rescue operations.
296-305-05011 Hazardous materials operations.
296-305-05013 Aircraft rescue and fire fighting.
296-305-05501 Fire training.
296-305-05503 Summary of training requirements.
296-305-06001 Fire service equipment.
296-305-06003 Testing fire service equipment.
296-305-06005 Ground ladders.
296-305-06007 Electrical.
296-305-06501 Requirements for fire station facilities.
296-305-06503 General requirements.
296-305-06505 Sanitation, disinfection, cleaning, and storage areas.
296-305-06507 Sleeping areas.
296-305-06509 Apparatus areas.
296-305-06511 Indoor air quality.
296-305-06513 Refueling areas.
296-305-06515 Hose drying towers.
296-305-06517 Drill tower training facilities.
296-305-06519 Fire station equipment and tools.
296-305-07001 Wildland fire operations.
296-305-07003 Personal protective clothing and equipment for wildland fire fighting.
296-305-07005 Respiratory protection for wildland fire fighters.
296-305-07007 Wildland personnel accountability.
296-305-07009 Apparatus standards for wildland fire fighting.
296-305-07011 Occupant restraints and enclosures for wildland fire fighting.
296-305-07013 Equipment for wildland fire fighting.
296-305-07015 Aircraft operations for fighting wildland fires.
296-305-07017 First aid for wildland fire fighters.
296-305-07019 Training for wildland fire fighting.
296-305-08000 Appendices.

DISPOSITION OF SECTIONS FORMERLY CODIFIED IN THIS CHAPTER

296-305-001 Foreword. [Order 77-20, § 296-305-001, filed 10/18/77 and Emergency Order 77-24, filed 11/17/77, effective 12/17/77.] Repealed by 96-11-067, filed 5/10/96, effective 1/1/97. Statutory Authority: RCW 49.17.010, [49.17].050 and [49.17].060.

296-305-003 Effective date. [Order 77-20, § 296-305-003, filed 10/18/77 and Emergency Order 77-24, filed 11/17/77, effective 12/17/77.] Repealed by 96-11-067, filed 5/10/96, effective 1/1/97. Statutory Authority: RCW 49.17.010, [49.17].050 and [49.17].060.

296-305-005 Scope and application. [Statutory Authority: RCW 49.17.040 and 49.17.050. 83-24-013 (Order 83-34), § 296-305-005, filed 11/30/83. Statutory Authority: RCW 49.17.040, 49.17.050, 49.17.240, chapters 42.30 and 43.22 RCW. 78-09-092 (Order 78-16), § 296-305-005, filed 8/31/78; Order 77-20, § 296-305-005, filed 10/18/77 and Emergency Order 77-24, filed 11/17/77, effective 12/17/77.] Repealed by 96-11-067, filed 5/10/96, effective 1/1/97. Statutory Authority: RCW 49.17.010, [49.17].050 and [49.17].060.

296-305-007 Definitions. [Statutory Authority: Chapter 49.17 RCW. 88-14-108 (Order 88-11), § 296-305-007, filed 7/6/88. Statutory Authority: RCW 49.17.040 and 49.17.050. 83-24-013 (Order 83-34), § 296-305-007, filed 11/30/83; Order 77-20, § 296-305-007, filed 10/18/77 and Emergency Order 77-24, filed 11/17/77, effective 12/17/77.] Repealed by 96-11-067, filed 5/10/96, effective 1/1/97. Statutory Authority: RCW 49.17.010, [49.17].050 and [49.17].060.

296-305-010 Variance and procedure. [Order 77-20, § 296-305-010, filed 10/18/77 and Emergency Order 77-24, filed 11/17/77, effective 12/17/77.] Repealed by 96-11-067, filed 5/10/96, effective 1/1/97. Statutory Authority: RCW 49.17.010, [49.17].050 and [49.17].060.

296-305-015 Injury and illness report for fire fighters. [Statutory Authority: Chapter 49.17 RCW. 90-17-051 (Order 90-10), § 296-305-015, filed 8/13/90, effective 9/24/90. Statutory Authority: RCW 49.17.040 and 49.17.050. 83-24-013 (Order 83-34), § 296-305-015, filed 11/30/83; Order 77-20, § 296-305-015, filed 10/18/77 and Emergency Order 77-24, filed 11/17/77, effective 12/17/77.] Repealed by 96-11-067, filed 5/10/96, effective 1/1/97. Statutory Authority: RCW 49.17.010, [49.17].050 and [49.17].060.

296-305-017 Accident investigation. [Order 77-20, § 296-305-017, filed 10/18/77 and Emergency Order 77-24, filed 11/17/77, effective 12/17/77.] Repealed by 96-11-067, filed 5/10/96, effective 1/1/97. Statutory Authority: RCW 49.17.010, [49.17].050 and [49.17].060.

296-305-020 Accident prevention programs. [Order 77-20, § 296-305-020, filed 10/18/77 and Emergency Order 77-24, filed 11/17/77, effective 12/17/77.] Repealed by 96-11-067, filed 5/10/96, effective 1/1/97. Statutory Authority: RCW 49.17.010, [49.17].050 and [49.17].060.

296-305-025 Management's responsibility. [Statutory Authority: Chapter 49.17 RCW. 94-16-145, § 296-305-025, filed 8/3/94, effective 9/12/94; 91-24-017 (Order 91-07), § 296-305-025, filed 11/22/91, effective 12/24/91; 89-11-035 (Order 89-03), § 296-305-025, filed 5/15/89, effective 6/30/89; Order 77-20, § 296-305-025, filed 10/18/77 and Emergency Order 77-24, filed 11/17/77, effective 12/17/77.] Repealed by 96-11-067, filed 5/10/96, effective 1/1/97. Statutory Authority: RCW 49.17.010, [49.17].050 and [49.17].060.

296-305-030 Employee's responsibility. [Order 77-20, § 296-305-030, filed 10/18/77 and Emergency Order 77-24, filed 11/17/77, effective 12/17/77.] Repealed by 96-11-067, filed 5/10/96, effective 1/1/97. Statutory Authority: RCW 49.17.010, [49.17].050 and [49.17].060.

296-305-035 Safe place standards. [Order 77-20, § 296-305-035, filed 10/18/77 and Emergency Order 77-24, filed 11/17/77, effective 12/17/77.] Repealed by 96-11-067, filed 5/10/96, effective 1/1/97. Statutory Authority: RCW 49.17.010, [49.17].050 and [49.17].060.

296-305-040 First-aid training and certification. [Statutory Authority: RCW 49.17.040 and 49.17.050. 83-24-013 (Order 83-34), § 296-305-040, filed 11/30/83; Order 77-20, § 296-305-040, filed 10/18/77 and Emergency Order 77-24, filed 11/17/77, effective 12/17/77.] Repealed by 96-11-067, filed 5/10/96, effective 1/1/97. Statutory Authority: RCW 49.17.010, [49.17].050 and [49.17].060.

296-305-045 First-aid kits. [Order 77-20, § 296-305-045, filed 10/18/77 and Emergency Order 77-24, filed 11/17/77, effective 12/17/77.] Repealed by 96-11-067, filed 5/10/96, effective 1/1/97. Statutory Authority: RCW 49.17.010, [49.17].050 and [49.17].060.

296-305-060 Personal protective equipment and clothing. [Statutory Authority: Chapter 49.17 RCW. 88-14-108 (Order 88-11), § 296-305-060, filed 7/6/88. Statutory Authority: RCW 49.17.040 and 49.17.050. 83-24-013 (Order 83-34), § 296-305-060, filed 11/30/83; Order 77-20, § 296-305-060, filed 10/18/77 and Emergency Order 77-24, filed 11/17/77, effective 12/17/77.] Repealed by 96-11-067, filed 5/10/96, effective 1/1/97. Statutory Authority: RCW 49.17.010, [49.17].050 and [49.17].060.

296-305-06009 Body protection. [Statutory Authority: Chapter 49.17 RCW. 91-11-070 (Order 91-01), § 296-305-06009, filed 5/20/91, effective 6/20/91. Statutory Authority: RCW 49.17.040 and 49.17.050. 83-24-013 (Order 83-34), § 296-305-06009, filed 11/30/83; Order 77-20, § 296-305-06009, filed 10/18/77 and Emergency Order 77-24, filed 11/17/77, effective 12/17/77.] Repealed by 96-11-067, filed 5/10/96, effective 1/1/97. Statutory Authority: RCW 49.17.010, [49.17].050 and [49.17].060.

296-305-06011 Head protection. [Statutory Authority: Chapter 49.17 RCW. 88-14-108 (Order 88-11), § 296-305-06011, filed 7/6/88. Statutory Authority: RCW 49.17.040 and 49.17.050. 83-24-013 (Order 83-34), § 296-305-06011, filed 11/30/83; Order 77-20, § 296-305-06011, filed 10/18/77 and Emergency Order 77-24, filed 11/17/77, effective 12/17/77.] Repealed by 96-11-067, filed 5/10/96, effective 1/1/97. Statutory Authority: RCW 49.17.010, [49.17].050 and [49.17].060.

296-305-063 Respiratory equipment. [Statutory Authority: Chapter 49.17 RCW. 91-24-017 (Order 91-07), § 296-305-063, filed 11/22/91, effective 12/24/91; 88-14-108 (Order 88-11), § 296-305-063, filed 7/6/88. Statutory Authority: RCW 49.17.040 and 49.17.050. 83-24-013 (Order 83-34), § 296-305-063, filed 11/30/83; Order 77-20, § 296-305-063, filed 10/18/77 and Emergency Order 77-24, filed 11/17/77, effective 12/17/77.] Repealed by 96-11-067, filed 5/10/96, effective 1/1/97. Statutory Authority: RCW 49.17.010, [49.17].050 and [49.17].-060.

296-305-06301 Respiratory equipment effective dates. [Statutory Authority: RCW 49.17.040 and 49.17.050. 83-24-013 (Order 83-34), § 296-305-06301, filed 11/30/83; Order 77-20, § 296-305-06301, filed 10/18/77 and Emergency Order 77-24, filed 11/17/77, effective 12/17/77.] Repealed by 88-14-108 (Order 88-11), filed 7/6/88. Statutory Authority: Chapter 49.17 RCW.

296-305-06303 Respiratory equipment approvals. [Order 77-20, § 296-305-06303, filed 10/18/77 and Emergency Order 77-24, filed 11/17/77, effective 12/17/77.] Repealed by 88-14-108 (Order 88-11), filed 7/6/88. Statutory Authority: Chapter 49.17 RCW.

296-305-06305 Respiratory equipment inspection. [Statutory Authority: RCW 49.17.040 and 49.17.050. 83-24-013 (Order 83-34), § 296-305-06305, filed 11/30/83; Order 77-20, § 296-305-06305, filed 10/18/77 and Emergency Order 77-24, filed 11/17/77, effective 12/17/77.] Repealed by 88-14-108 (Order 88-11), filed 7/6/88. Statutory Authority: Chapter 49.17 RCW.

296-305-06307 Respiratory equipment testing. [Statutory Authority: RCW 49.17.040 and 49.17.050. 83-24-013 (Order 83-34), § 296-305-06307, filed 11/30/83; Order 77-20, § 296-305-06307, filed 10/18/77 and Emergency Order 77-24, filed 11/17/77, effective 12/17/77.] Repealed by 88-14-108 (Order 88-11), filed 7/6/88. Statutory Authority: Chapter 49.17 RCW.

296-305-06309 Respiratory protection equipment maintenance and repair. [Statutory Authority: RCW 49.17.040 and 49.17.050. 83-24-013 (Order 83-34), § 296-305-06309, filed 11/30/83; Order 77-20, § 296-305-06309, filed 10/18/77 and Emergency Order 77-24, filed 11/17/77, effective 12/17/77.] Repealed by 88-14-108 (Order 88-11), filed 7/6/88. Statutory Authority: Chapter 49.17 RCW.

296-305-06311 Respiratory equipment training. [Order 77-20, § 296-305-06311, filed 10/18/77 and Emergency Order 77-24, filed 11/17/77, effective 12/17/77.] Repealed by 88-14-108 (Order 88-11), filed 7/6/88. Statutory Authority: Chapter 49.17 RCW.

296-305-06313 Filling air cylinders. [Statutory Authority: RCW 49.17.040 and 49.17.050. 83-24-013 (Order 83-34), § 296-305-06313, filed 11/30/83.] Repealed by 88-14-108 (Order 88-11), filed 7/6/88. Statutory Authority: Chapter 49.17 RCW.

296-305-064 Fire overhaul. [Statutory Authority: Chapter 49.17 RCW. 88-14-108 (Order 88-11), § 296-305-064, filed 7/6/88.] Repealed by 96-11-067, filed 5/10/96, effective 1/1/97. Statutory Authority: RCW 49.17.010, [49.17].050 and [49.17].060.

296-305-065 Requirements for fire stations. [Order 77-20, § 296-305-065, filed 10/18/77 and Emergency Order 77-24, filed 11/17/77, effective 12/17/77.] Repealed by 96-11-067,

filed 5/10/96, effective 1/1/97. Statutory Authority: RCW 49.17.010, [49.17].050 and [49.17].060.

296-305-070 Automotive fire apparatus. [Order 77-20, § 296-305-070, filed 10/18/77 and Emergency Order 77-24, filed 11/17/77, effective 12/17/77.] Repealed by 96-11-067, filed 5/10/96, effective 1/1/97. Statutory Authority: RCW 49.17.010, [49.17].050 and [49.17].060.

296-305-075 Fire service equipment. [Statutory Authority: RCW 49.17.040 and 49.17.050. 83-24-013 (Order 83-34), § 296-305-075, filed 11/30/83; Order 77-20, § 296-305-075, filed 10/18/77 and Emergency Order 77-24, filed 11/17/77, effective 12/17/77.] Repealed by 96-11-067, filed 5/10/96, effective 1/1/97. Statutory Authority: RCW 49.17.010, [49.17].050 and [49.17].060.

296-305-080 Testing fire service equipment. [Statutory Authority: RCW 49.17.040 and 49.17.050. 83-24-013 (Order 83-34), § 296-305-080, filed 11/30/83; Order 77-20, § 296-305-080, filed 10/18/77 and Emergency Order 77-24, filed 11/17/77, effective 12/17/77.] Repealed by 96-11-067, filed 5/10/96, effective 1/1/97. Statutory Authority: RCW 49.17.010, [49.17].050 and [49.17].060.

296-305-085 Fire combat training. [Order 77-20, § 296-305-085, filed 10/18/77 and Emergency Order 77-24, filed 11/17/77, effective 12/17/77.] Repealed by 96-11-067, filed 5/10/96, effective 1/1/97. Statutory Authority: RCW 49.17.010, [49.17].050 and [49.17].060.

296-305-090 Operations. [Statutory Authority: RCW 49.17.040 and 49.17.050. 83-24-013 (Order 83-34), § 296-305-090, filed 11/30/83; Order 77-20, § 296-305-090, filed 10/18/77 and Emergency Order 77-24, filed 11/17/77, effective 12/17/77.] Repealed by 96-11-067, filed 5/10/96, effective 1/1/97. Statutory Authority: RCW 49.17.010, [49.17].050 and [49.17].060.

296-305-095 Fire overhaul. [Order 77-20, § 296-305-095, filed 10/18/77 and Emergency Order 77-24, filed 11/17/77, effective 12/17/77.] Repealed by 96-11-067, filed 5/10/96, effective 1/1/97. Statutory Authority: RCW 49.17.010, [49.17].050 and [49.17].060.

296-305-9901 Testing extension ladders—Figure 14. [Order 77-20, Illustration (codified as WAC 296-305-9901), filed 10/18/77 and Emergency Order 77-24, filed 11/17/77, effective 12/17/77.] Repealed by 88-14-108 (Order 88-11), filed 7/6/88. Statutory Authority: Chapter 49.17 RCW.

296-305-9902 Testing extension ladders—Figure 15. [Order 77-20, Illustration (codified as WAC 296-305-9902), filed 10/18/77 and Emergency Order 77-24, filed 11/17/77, effective 12/17/77.] Repealed by 88-14-108 (Order 88-11), filed 7/6/88. Statutory Authority: Chapter 49.17 RCW.

296-305-9903 Testing extension ladders—Illustration. [Order 77-20, Illustration (codified as WAC 296-305-9903), filed 10/18/77 and Emergency Order 77-24, filed 11/17/77, effective 12/17/77.] Repealed by 88-14-108 (Order 88-11), filed 7/6/88. Statutory Authority: Chapter 49.17 RCW.

296-305-9904 Testing extension ladders—Illustration. [Order 77-20, Illustration (codified as WAC 296-305-9904), filed 10/18/77 and Emergency Order 77-24, filed 11/17/77, effective 12/17/77.] Repealed by 88-14-108 (Order 88-11), filed 7/6/88. Statutory Authority: Chapter 49.17 RCW.

296-305-9905 Testing extension ladders—Illustration. [Order 77-20, Illustration (codified as WAC 296-305-9905), filed 10/18/77 and Emergency Order 77-24, filed 11/17/77, effective 12/17/77.] Repealed by 88-14-108 (Order 88-11), filed 7/6/88. Statutory Authority: Chapter 49.17 RCW.

296-305-9906 Testing extension ladders—Illustration. [Order 77-20, Illustration (codified as WAC 296-305-9906), filed 10/18/77 and Emergency Order 77-24, filed 11/17/77, effective 12/17/77.] Repealed by 88-14-108 (Order 88-11), filed 7/6/88. Statutory Authority: Chapter 49.17 RCW.

296-305-100 Ladders. [Statutory Authority: Chapter 49.17 RCW. 88-14-108 (Order 88-11), § 296-305-100, filed 7/6/88. Statutory Authority: RCW 49.17.040 and 49.17.050. 83-24-013 (Order 83-34), § 296-305-100, filed 11/30/83; Order 77-20, § 296-305-100, filed 10/18/77 and Emergency Order 77-24, filed 11/17/77, effective 12/17/77.] Repealed by 96-11-067, filed 5/10/96, effective 1/1/97. Statutory Authority: RCW 49.17.010, [49.17].050 and [49.17].060.

296-305-105 Aerial ladders. [Statutory Authority: RCW 49.17.040 and 49.17.050. 83-24-013 (Order 83-34), § 296-305-105, filed 11/30/83; Order 77-20, § 296-305-105, filed 10/18/77 and Emergency Order 77-24, filed 11/17/77, effective 12/17/77.] Repealed by 96-11-067, filed 5/10/96, effective 1/1/97. Statutory Authority: RCW 49.17.010, [49.17].050 and [49.17].060.

296-305-110 Elevated platforms. [Statutory Authority: Chapter 49.17 RCW. 91-03-044 (Order 90-18), § 296-305-110, filed 1/10/91, effective 2/12/91. Statutory Authority: RCW 49.17.040 and 49.17.050. 83-24-013 (Order 83-34), § 296-305-110, filed 11/30/83; Order 77-20, § 296-305-110, filed 10/18/77 and Emergency Order 77-24, filed 11/17/77, effective 12/17/77.] Repealed by 96-11-067, filed 5/10/96, effective 1/1/97. Statutory Authority: RCW 49.17.010, [49.17].050 and [49.17].060.

296-305-115 Electrical. [Order 77-20, § 296-305-115, filed 10/18/77 and Emergency Order 77-24, filed 11/17/77, effective 12/17/77.] Repealed by 96-11-067, filed 5/10/96, effective 1/1/97. Statutory Authority: RCW 49.17.010, [49.17].050 and [49.17].060.

WAC 296-305-01001 Foreword. These fire fighter safety and health standards were adopted by the department of labor and industries in accordance with the provisions of the Washington Industrial Safety and Health Act (WISHA) of 1973 (chapter 49.17 RCW), with recommendations from the fire service advisory committee.

The purpose of this chapter is to assist employers and employees in the reduction of work related injuries and illnesses. In addition to providing an enforceable set of safety and health standards for the fire protection services, it is the intent of the department that the provisions of this chapter be used to assist both employers and employees in achieving the safest workplace reasonably attainable under the conditions to which employees are or will be exposed.

[Statutory Authority: RCW 49.17.010, [49.17].050 and [49.17].060. 96-11-067, § 296-305-01001, filed 5/10/96, effective 1/1/97.]

WAC 296-305-01002 Effective date. Unless a particular provision of this chapter specifies otherwise, the effective date of chapter 296-305 WAC, shall be January 1, 1997.

[Statutory Authority: RCW 49.17.010, [49.17].050 and [49.17].060. 96-11-067, § 296-305-01002, filed 5/10/96, effective 1/1/97.]

WAC 296-305-01003 Scope and application. (1) The rules of this chapter shall apply with respect to any and all activities, operations and equipment of employers and employees involved in providing fire protection services which are subject to the provisions of the Washington Industrial Safety and Health Act of 1973 (chapter 49.17 RCW).

(2) The provisions of this chapter apply to all fire fighters and their work places, including the fire combat scene. Although enforcement of applicable standards will result from provable violations of these standards at the fire combat scene, agents of the department will not act in any manner that will reduce or interfere with the effectiveness of the emergency response of a fire fighting unit. Activities directly related to the combating of a fire will not be subjected to the immediate restraint provisions of RCW 49.17.130.

(3) In the development of this document many consensus standards of the industry were considered and evaluated as to adaptability to the Washington state fire service industry. Where adaptable and meaningful, the fire fighter safety elements of these standards were incorporated into this WAC.

Chapter 296-305 WAC, shall be considered as the fire fighter safety standards for the state of Washington.

(4) The provisions of this chapter cover existing requirements that apply to all fire departments. All fire departments shall have in place their own policy statement and operating instructions that meet or exceed these requirements. This chapter contains state and/or federal performance criteria that fire departments shall meet.

(5) Unless specifically stated otherwise by rule, if a duplication of regulations, or a conflict exists between the rules regulating wildland fire fighting and other rules in the chapter, only the rules regulating wildland fire fighting shall apply to wildland fire fighting activities and equipment.

(6) The provisions of this chapter shall be supplemented by the provisions of the general safety and health standards of the department of labor and industries, chapters 296-24 (including Part G-2, Fire protection), 296-62 and 296-800 WAC. In the event of conflict between any provision(s) of this chapter and any provision(s) of the general safety and health standards, the provision(s) of this chapter shall apply.

(7) The provisions of this standard do not apply to industrial fire brigades, as defined in this chapter. Industrial fire brigades are covered under the provisions of chapter 296-24 WAC, Part G-2, Fire protection.

[Statutory Authority: RCW 49.17.010, [49.17].040, and [49.17].050. 01-11-038, § 296-305-01003, filed 5/9/01, effective 9/1/01. Statutory Authority: RCW 49.17.040. 99-05-080, § 296-305-01003, filed 2/17/99, effective 6/1/99. Statutory Authority: RCW 49.17.010, [49.17].050 and [49.17].060. 96-11-067, § 296-305-01003, filed 5/10/96, effective 1/1/97.]

WAC 296-305-01005 Definitions. Unless the context indicates otherwise, words used in this chapter shall have the meaning given in this section.

Accident: An unexpected event that interrupts or interferes with the orderly progress of the fire department operations and may or may not include personal injury or property damage.

Accountability system: A system of fire fighter accountability that provides for the tracking and inventory of all members.

ACGIH: American Conference of Governmental Industrial Hygienists.

Aerial ladder: A ladder mounted on top of an apparatus, hydraulic or pneumatic controlled.

Aerial tower: Telescopic elevating platform or water tower assembly usually with a ladder on top of the section.

Aerial platform: A device consisting of two or more booms or sections with a passenger carrying platform assembly.

ANSI: American National Standards Institute.

Apparatus: A mobile piece of fire equipment such as a pumper, aerial, tender, automobile, etc.

Approved:

(1) A method, equipment, procedure, practice, tool, etc., which is sanctioned, consented to, confirmed or accepted as good or satisfactory for a particular purpose or use by a person, or organization authorized to make such a judgment.

(2) Means approved by the director of the department of labor and industries or his/her authorized representative: Provided, however, That should a provision of this chapter state that approval by an agency or organization other than the department of labor and industries is required, such as Underwriters' Laboratories or the Bureau of Mines, the provisions of chapter 296-800 WAC shall apply.

Audiogram: A chart, graph, or table resulting from an audiometric test showing an individual's hearing threshold levels as a function of frequency.

Authorized person: A person approved or assigned by the employer to perform a specific type of duty or duties or to be at a specific location or locations at the job site.

Beacon: A flashing or rotating light.

Bloodborne pathogens: Pathogenic microorganisms that are present in human blood and can cause disease in humans. These pathogens include, but are not limited to, hepatitis B virus (HBV) and human immunodeficiency virus (HIV).

Blowup (wildfire): Sudden increase in fire intensity or rate of spread sufficient to preclude direct control or to upset existing control plans. Often accompanied by violent convection and may have other characteristics of a fire storm.

Chemical-protective clothing: Items made from chemical-resistive materials, such as clothing, hood, boots, and gloves, that are designed and configured to protect the wearer's torso, head, arms, legs, hands, and feet from hazardous materials. Chemical-protective clothing (garments) can be constructed as a single, or multipiece, garment. The garment may completely enclose the wearer either by itself or in combination with the wearer's respiratory protection, attached or detachable hood, gloves, and boots.

Chief: The employer representative highest in rank who is responsible for the fire department's operation.

Combat scene: The site where the suppression of a fire or emergency exists.

Confinement: Those procedures taken to keep a material in a defined or local area.

Confined space: Means a space that:

(1) Is large enough and so configured that an employee can bodily enter and perform assigned work; and

(2) Has limited or restricted means for entry or exit (for example, tanks, vessels, silos, storage bins, hoppers, vaults, and pits are spaces that may have limited means of entry.); and

(3) Is not designed for continuous employee occupancy.

Containment: The actions taken to keep a material in its container (e.g. stop the release of the material or reduce the amount being released.)

Contaminated: The presence or the reasonably anticipated presence of nuisance materials foreign to the normal atmospheres, blood, hazardous waste, or other potentially infectious materials on an item or surface.

Contaminated laundry: Laundry which has been soiled with blood or other potentially infectious materials or may contain contaminated sharps.

Contamination: The process of transferring a hazardous material from its source to people, animals, the environment, or equipment, which may act as a carrier.

dBA: A measure of noise level expressed as decibels measured on the "A" scale.

Deck pipe: A permanently mounted device which delivers a large stream of water.

Decontamination:

(1) The physical or chemical process of reducing and preventing the spread of contamination from persons or equipment used at a hazardous materials incident.

(2) The use of physical or chemical means to remove, inactivate, or destroy bloodborne pathogens on a surface or item to the point where they are no longer capable of transmitting infectious particles and the surface or item is rendered safe for handling, use, or disposal.

Department: Department of labor and industries.

Director of fire department: The chief or principle administrator of the fire department.

Director: The director of the department of labor and industries, or his/her designated representative.

Disinfection: A procedure which inactivates virtually all recognized pathogenic microorganisms, but not necessarily all microbial forms (example: bacterial endospores) on inanimate objects.

Drill tower: A structure which may or may not be attached to the station and which is principally used for training fire fighters in fire service techniques.

Driver: A person having satisfactorily completed the fire department's "requirements of driver" of a specific piece of fire apparatus.

Emergency: A sudden and unexpected event calling for immediate action.

Emergency incident: A specific emergency operation.

Emergency medical care: The provision of treatment to, and/or transportation of, patients which may include first aid, cardiopulmonary resuscitation, basic life support, advanced life support, and other medical procedures that occur prior to arrival at a hospital or other health care facility.

Emergency operations: Activities of the fire department relating to rescue, fire suppression, emergency medical care, and special operations, including response to the scene of an incident and all functions performed at the scene.

Employee: An employee of an employer who is employed in the business of his/her employer whether by way of manual labor or otherwise and every person in this state who is engaged in the employment of or who is working under an independent contract the essence of which is their personal labor for an employer under this chapter whether by way of manual labor or otherwise. Also see "Member."

Employer: Any person, firm, corporation, partnership, business trust, legal representative, or other business entity which engages in any business, industry, profession, or activity in this state and employs one or more employees or who contracts with one or more persons, the essence of which is the personal labor of such person or persons and includes the state, counties, cities, and all municipal corporations, public corporations, political subdivisions of the state, and charitable organizations.

Employer representative: A fire department officer authorized by the chief or director of the fire department to act in his/her behalf.

Engine (pumper): A piece of apparatus equipped with hose and a pump for the purpose of supplying water under pressure through hose lines.

Engineering control: Any procedure other than an administrative control that reduces exposures by modifying the source or reducing the exposure to an individual. Examples of engineering controls include the use of isolation, containment, encapsulation, sound absorbing materials for noise control, and ventilation.

Explosion proof equipment: Equipment enclosed in a case that is capable of withstanding an explosion or a specified gas or vapor which may occur within it and of preventing the ignition of a specified gas or vapor surrounding the enclosure by sparks, flashes, or explosion of the gas or vapor within, and which operates at such an external temperature that it will not ignite a surrounding flammable atmosphere.

Fastest means available: The (nearest-closest) telephone, portable radio, mobile radio, telephone/radio dispatcher or any other mode of mechanical communication.

Fire apparatus: A fire department emergency vehicle used for rescue, fire suppression, or other specialized functions.

Fire boat: A fire department watercraft having a permanent, affixed fire fighting capability.

Fire combat training: Training received by fire fighters on the drill ground, drill tower, or industrial site to maintain the fire fighter's proficiency.

Fire department: An organization providing any or all of the following: Rescue, fire suppression, and other related activities. For the purposes of this standard the term "Fire Department" shall include any public, private, or military organization engaging in this type of activity.

Fire department facility: Any building or area owned, operated, occupied, or used by a fire department on a routine basis. This does not include locations where a fire department may be summoned to perform emergency operations or other duties, unless such premises are normally under the control of the fire department.

Fire department safety officer: The member of the fire department assigned and authorized as the principal safety officer to perform the duties and responsibilities specified in this standard.

Fire fighter: A member of a fire department whose duties require the performance of essential fire fighting functions or substantially similar functions.

Fire retardant: Any material used to reduce, stop or prevent the flame spread.

Fly: Extendible sections of ground or aerial ladders.

Foot stand, ladder: Devices attached to inside of beams of ladders that when folded down, provide foot space.

Ground jack: Heavy jacks attached to frame of chassis of aerial-equipped apparatus to provide stability when the aerial portion of the apparatus is used.

Ground mobile attack: The activities of wildland fire fighting with hose lines being used by personnel working around a moving engine. See mobile attack.

Guideline: An organizational directive that establishes a standard course of action.

Halyard: Rope used on extension ladders for the purpose of raising or lowering fly section(s). A wire cable may be referred to as a halyard when used on the uppermost fly section(s) of three or four section extension ladders.

Hazard communication program: A procedure to address comprehensively the issue of evaluating the potential hazards of chemicals and communicating information concerning hazards and appropriate protective measures to

employees. See WAC 296-800-170, Chemical Hazard Communication Program.

Hazardous area: The immediate area where members might be exposed to a hazard.

Hazardous atmosphere: Any atmosphere, either immediately or not immediately dangerous to life or health, which is oxygen deficient or which contains a toxic or disease-producing contaminant.

Hazardous condition: The physical condition or act which is causally related to accident occurrence. The hazardous condition is related directly to both the accident type and the agency of the accident.

Hazardous material: A substance (solid, liquid, or gas) that when released is capable of creating harm to people, the environment, and property.

Hazardous substances: Substances that present an unusual risk to persons due to properties of toxicity, chemical activity, corrosivity, etiological hazards of similar properties.

HEPA filtration: High efficiency particulate air filtration found in vacuum system capable of filtering 0.3 micron particles with 99.97% efficiency.

Hose bed: Portion of fire apparatus where hose is stored.

Hose tower: A vertical enclosure where hose is hung to dry.

Hot zone: Area immediately surrounding a hazardous materials incident, which extends far enough to prevent adverse effects from hazardous materials releases to personnel outside the zone. This zone is also referred to as the exclusion zone or the restricted zone in other documents.

Identify: To select or indicate verbally or in writing using recognized standard terms. To establish the identity of; the fact of being the same as the one described.

IDLH: Immediately dangerous to life and health.

Imminent hazard (danger): An act or condition that is judged to present a danger to persons or property and is so immediate and severe that it requires immediate corrective or preventative action.

Incident commander: The person in overall command of an emergency incident. This person is responsible for the direction and coordination of the response effort.

Incident command system (ICS): A system that includes: Roles, responsibilities, operating requirements, guidelines and procedures for organizing and operating an on-scene management structure.

Incipient (phase) fire: The beginning of a fire; where the oxygen content in the air has not been significantly reduced and the fire is producing minute amounts of water vapor, carbon dioxide, carbon monoxide and other gases; the room has a normal temperature and can be controlled or extinguished with a portable fire extinguisher or small hose, e.g., a kitchen stove fire.

Industrial fire brigade: An organized group of employees whose primary employment is other than fire fighting who are knowledgeable, trained and skilled in specialized operations based on site-specific hazards present at a single commercial facility or facilities under the same management.

Initial stage (initial action): Shall encompass the control efforts taken by resources which are first to arrive at an incident.

Injury: Physical damage suffered by a person that requires treatment by a practitioner of medicine (a physician, nurse, paramedic or EMT) within one year of the incident regardless of whether treatment was actually received.

Interior structural fire fighting: The physical activity of fire suppression, rescue or both, inside of buildings or enclosed structures which are involved in a fire situation beyond the incipient stage. See structural fire fighting.

Life safety or rescue rope: Rope dedicated solely for the purpose of constructing lines for supporting people during rescue, fire fighting, or other emergency operations, or during training evolutions.

Line: Rope when in use.

Live fire training: Any fire set within a structure, tank, pipe, pan, etc., under controlled conditions to facilitate the training of fire fighters under actual fire conditions.

Locking in: The act of securing oneself to a ladder by hooking a leg over a rung and placing top of foot against the other leg or against the ladder.

Manned station: See staffed station.

May: A permissive use or an alternative method to a specified requirement.

Member: A person involved in performing the duties and responsibilities of a fire department under the auspices of the organization. A fire department member may be a full-time or part-time employee or a paid or unpaid volunteer, may occupy any position or rank within the fire department, and engages in emergency operations. Also see Employee.

Mobile attack: The act of fighting wildland fires from a moving engine.

Monitor: A portable appliance that delivers a large stream of water.

Mop up: The act of making a wildfire/wildland fire safe after it is controlled, such as extinguishing or removing burning materials along or near the control line, felling snags, trenching logs to prevent rolling.

NFPA: National Fire Protection Association.

NIIMS: National Interagency Incident Management System.

NIOSH: National Institute of Occupational Safety and Health.

Nondestructive testing: A test to determine the characteristics or properties of a material or substance that does not involve its destruction or deterioration.

Nonskid: The surface treatment that lessens the tendency of a foreign substance to reduce the coefficient of friction between opposing surfaces.

Occupational exposure: Means reasonably anticipated skin, eye, mucous membrane or parenteral contact with blood or other potentially infectious materials that may result from the performance of an employee's duties.

Officer: (1) Person in charge of a particular task or assignment.

(2) A supervisor.

OSHA: Occupational Safety and Health Administration.

Other potentially infectious materials (OPIM): (1) The following body fluids: Semen, vaginal secretions, cerebrospinal fluid, synovial fluid, pleural fluid, pericardial fluid, peritoneal fluid, amniotic fluid, saliva in dental procedures, any body fluid that is visibly contaminated with blood, and

all body fluids in situations where it is difficult or impossible to differentiate between body fluids;

(2) Any unfixed tissue or organ (other than intact skin) from a human (living or dead); and

(3) HIV-containing cell or tissue cultures, organ cultures, and HIV-or HBV-containing culture medium or other solutions; and blood, organs, or other tissues from experimental animals infected with HIV or HBV.

Outrigger: Manually or hydraulically operated metal enclosures and jacks which are extended and placed in contact with the ground to give the apparatus a wide, solid base to support different loads.

Overhauling: That portion of fire extinguishment involving discovery of hidden fires or smoldering material.

PASS: Personal alert safety system.

PEL: Permissible exposure limit.

Personal protective equipment (PPE): (1) The equipment provided to shield or isolate a person from the chemical, physical, and thermal hazards that may be encountered at a hazardous materials incident. Personal protective equipment includes both personal protective clothing and respiratory protection. Adequate personal protective equipment should protect the respiratory system, skin, eyes, face, hands, feet, head, body, and hearing.

(2) Specialized clothing or equipment worn by an employee for protection against a hazard. General work clothes (e.g., uniforms, pants, shirts, or blouses) not intended to function as protection against a hazard are not considered to be personal protective equipment.

Place of employment: Any premises, room or other place where an employee or employees are employed for the performance of labor or service over which the employer has the right of access or control. For the purposes of this code, fireground and emergency scenes are also considered places of employment.

Platform: The portion of a telescoping or articulating boom used as a working surface.

Positive communication: Visual, audible, physical, safety guide rope, or electronic means which allows for two way message generation and reception.

PPE: Personal protective equipment.

Prefire training: The training of fire fighters in recognizing sources and locations of potential fires and the method of fire combat to be used.

Probable fatality: (1) An occupational injury or illness, which, by the doctor's prognosis, could lead to death.

(2) An occupational injury or illness, which by its very nature, is considered life threatening.

Protective clothing: Equipment designed to protect the wearer from heat and/or hazardous materials contacting the skin or eyes. Protective clothing is divided into five types:

(1) Structural fire fighting protective clothing;

(2) Liquid splash-protective clothing;

(3) Vapor-protective clothing;

(4) High temperature-protective proximity clothing; and

(5) Wildland fire fighting clothing.

Note: See Protective ensemble.

Protective ensemble: Multiple elements of clothing and equipment designed to provide a degree of protection for fire fighters from adverse exposures to the inherent risks of structural fire fighting operations and certain other emergency operations. The elements of the protective ensemble are helmets, coats, trousers, gloves, footwear, interface components (hoods), and if applicable, personal alert system (PASS) devices, and self-contained breathing apparatus.

Proximity protective clothing: Radiant reflective protective garments configured as a coat and trousers, or as a coverall, and interface components that are designed to provide protection for the fire fighter's body from conductive, convective, and radiant heat.

Pumper: See engine.

Qualified: One who by possession of a recognized degree, certificate or professional standing, or who by knowledge, training or experience has successfully demonstrated his/her ability to solve or resolve problems related to the subject matter, the work or the project.

Rapid intervention team (RIT): On-scene team of at least two members designated, dedicated and equipped to effect an immediate rescue operation if the need arises.

RCW: Revised Code of Washington.

Rescue: Those activities directed at locating endangered persons at an emergency incident and removing those persons from danger.

Rescue craft: Any fire department watercraft used for rescue operations.

Respirator: A device designed to protect the wearer from breathing harmful atmospheres. See respiratory protection.

Respiratory equipment: Self-contained breathing apparatus designed to provide the wearer with a supply of respirable atmosphere carried in or generated by the breathing apparatus. When in use, this breathing apparatus requires no intake of air or oxygen from the outside atmosphere.

(1) Respirators (closed circuit): Those types of respirators which retain exhaled air in the system and recondition such air for breathing again.

(2) Respirators (open circuit): Those types of respirators which exhaust exhaled air to the outside of the mask into the ambient air.

(3) Respirators (demand): Those types of respirators whose input air to the mask is started when a negative pressure is generated by inhalation.

(4) Respirators (pressure demand): Those types of respirators which constantly and automatically maintain a positive pressure in the mask by the introduction of air when the positive pressure is lowered (usually from .018 psi to .064 psi) through the process of inhalation or leakage from the mask.

Respiratory protection: Equipment designed to protect the wearer from the inhalation of contaminants. Respiratory protection is divided into three types:

(1) Positive pressure self-contained breathing apparatus (SCBA);

(2) Positive pressure airline respirators;

(3) Negative pressure air purifying respirators.

Responding: The usual reference to the act of responding or traveling to an alarm or request for assistance.

Risk assessment: To set or determine the possibility of suffering harm or loss, and to what extent.

Safe and healthful working environment: The work surroundings of an employee with minimum exposure to unsafe acts and/or unsafe conditions.

Safety officer: Either the fire department safety officer or an assistant safety officer (see fire department safety officer).

Safety net: A rope or nylon strap net not to exceed 6-inch mesh, stretched and suspended above ground level at the base of drill tower, and at such a height that a falling body would be arrested prior to striking the ground.

Scabbard: A guard which will prevent accidental injury and covers the blade and pick of an axe or other sharp instrument when worn by the fire fighter.

SCBA: Self contained breathing apparatus.

Service testing: The regular, periodic inspection and testing of apparatus and equipment according to an established schedule and procedure, to insure that it is in safe and functional operating condition.

Shall: Mandatory.

Should: Recommended.

Signalman: A person so positioned that he/she can direct the driver when the drivers vision is obstructed or obscured.

SOP: Standard operating procedure or guidelines.

Staffed station: A fire station continuously occupied by fire fighters on scheduled work shifts. The staffed station may also serve as headquarters for volunteers.

Standard operating procedure or guidelines: An organizational directive that establishes a standard course of action. See SOP.

Station (fire station): Structure in which fire service apparatus and/or personnel are housed.

Structural fire fighting: The activities of rescuing, fire suppression, and property conservation involving buildings, enclosed structures, vehicles, vessels, or similar properties that are involved in a fire or emergency situation. See interior structural fire fighting.

Structural fire fighting protective clothing: This category of clothing, often called turnout or bunker gear, means the protective clothing normally worn by fire fighters during structural fire fighting operations. It includes a helmet, coat, pants, boots, gloves, and a hood. Structural fire fighters' protective clothing provides limited protection from heat but may not provide adequate protection from the harmful gases, vapors, liquids, or dusts that are encountered during hazardous materials incidents.

Support function: A hazardous chemical operation involving controlled chemical uses or exposures in nonflammable atmospheres with minimum threats in loss of life, personnel injury, or damage to property or to the environment. Functions include decontamination, remedial cleanup of identified chemicals, and training.

Support function protective garment: A chemical-protective suit that meets the requirements of NFPA Standard on Support Function Garments, 1993.

Tail/running board: Standing space on the side or rear of an engine or pumper apparatus.

Team: Two or more individuals who are working together in positive communication with each other through visual, audible, physical, safety guide rope, electronic, or other means to coordinate their activities and who are in close proximity to each other to provide assistance in case of emergency.

Tillerman: Rear driver of tractor-trailer aerial ladder.

Trench: A narrow excavation made below the surface of the ground. The depth is generally greater than the width, but the width of a trench is not greater than 15 feet.

Turnout clothing: See structural fire fighting protective clothing.

Turntable: The rotating surface located at the base of an aerial ladder, or boom, on aerial apparatus.

Universal precaution: An approach to infection control. According to the concept of universal precautions, all human blood and certain human body fluids are treated as if known to be infectious for HIV, HBV, and other bloodborne pathogens.

Vapor barrier: Material used to prevent or substantially inhibit the transfer of water, corrosive liquids and steam or other hot vapors from the outside of a garment to the wearer's body.

Variance: An allowed or authorized deviation from specific standard(s) when an employer substitutes measures which afford an equal degree of safety. Variances are issued as temporary or permanent with interim measures issued, when requested, until a determination or decision is made.

Vessel: Means every description of watercraft or other artificial contrivance used or capable of being used as a means of transportation on water, including special-purpose floating structures not primarily designed for or used as a means of transportation on water.

WAC: Washington Administrative Code.

Wheel blocks (chocks): A block or wedge placed under a wheel to prevent motion.

Wildfire: An unplanned and unwanted fire requiring suppression action; an uncontrolled fire, usually spreading through vegetative fuels and often threatening structures.

Wildland fire: A fire burning in natural vegetation that requires an individual or crew(s) to expend more than one hour of labor to confine, control and extinguish. Agencies may substitute crews to avoid the one hour bench mark or increase crew size to complete the job in less than one hour. One hour was chosen as the maximum time that individuals should work in high temperatures in structural protective clothing.

Wildland fire fighting enclosure: A fire apparatus enclosure with a minimum of three sides and a bottom.

WISHA: Washington Industrial Safety Health Act.

Work environment: The surrounding conditions, influences or forces to which an employee is exposed while working.

Workplace: See place of employment.

WRD: WISHA regional directive.

[Statutory Authority: RCW 49.17.010, [49.17].040, and [49.17].050. 01-11-038, § 296-305-01005, filed 5/9/01, effective 9/1/01. Statutory Authority: RCW 49.17.040. 99-05-080, § 296-305-01005, filed 2/17/99, effective 6/1/99. Statutory Authority: RCW 49.17.010, [49.17].050 and [49.17].060. 96-11-067, § 296-305-01005, filed 5/10/96, effective 1/1/97.]

WAC 296-305-01007 Variance and procedure. (1) Conditions may exist in operations that a state standard will not have practical use. The director may issue a variance from the requirements of the standard when another means of providing equal protection is provided.

(2) Applications for variances will be reviewed and investigated by the department. Variances granted shall be

limited to the specific WAC code covered in the application and may be revoked for cause. The variance shall remain prominently posted on the premises while in effect.

Note: Variance forms may be obtained from the department upon request. Requests for variance from safety and health standards shall be made in writing to the assistant director, Consultation and Compliance Services Division, Department of Labor and Industries, P.O. Box 44600, Olympia, Washington 98504-4600. (Reference RCW 49.17.080 and 49.17.090.)

[Statutory Authority: RCW 49.17.010, [49.17].050 and [49.17].060. 96-11-067, § 295-305-01007, filed 5/10/96, effective 1/1/97.]

WAC 296-305-01009 Appeals. Any party authorized to appeal from an action of the department as set forth in RCW 49.17.140(3), may do so by filing a notice of appeal in writing. The appeal must contain the recommended subject matter, as noted below, by serving a copy of such notice of appeal either in person or by mail upon the assistant director of the Consultation and Compliance Services Division, (7273 Linderson Way, Tumwater, Washington) P.O. Box 44600, Olympia, Washington 98504-4600. The appeal must be sent to the department within fifteen working days of the communication of the notice.

The notice of appeal should contain:

(1) The name and address of the appealing party and his/her representative if any;

(2) The place where the alleged safety violation occurred;

(3) A statement identifying the order, decision or citation appealed from, by report number and date of issuance;

(4) The grounds upon which the appealing party considers such order, decision, or citation to be unjust or unlawful;

(5) A statement of facts in support of each grounds stated;

(6) The relief sought, including the specific nature and extent;

(7) A statement that the person signing the notice of appeal has read it and to the best of his/her knowledge, information and belief there is good ground to support it. A notice of appeal may be signed by the party or by his/her authorized representative.

References:

WAC 296-800-350, Inspections, citations and appeals—Contents RCW 49.17.140(3).

[Statutory Authority: RCW 49.17.010, [49.17].040, and [49.17].050. 01-11-038, § 296-305-01009, filed 5/9/01, effective 9/1/01. Statutory Authority: RCW 49.17.010, [49.17].050 and [49.17].060. 96-11-067, § 296-305-01009, filed 5/10/96, effective 1/1/97.]

WAC 296-305-01501 Injury and illness reports for fire fighters. (1) Notice of injury or illness.

(a) Whenever an occupational accident causes injury or illness to a fire fighter or other employee, or whenever a fire fighter or other employee becomes aware of an illness apparently caused by occupational exposure, it shall be the duty of such a fire fighter or other employee, or someone on his/her behalf, to report the injury or illness to the employer before the end of his/her duty period but not later than twenty-four hours after the incident.

(b) Exception: In the event that symptoms of an occupational injury or illness are not apparent at the time of the incident, the employee shall report the symptoms to his/her employer within forty-eight hours after becoming aware of the injury or illness.

(c) Within eight hours after the fatality or probable fatality of any fire fighter or employee from a work-related incident or the inpatient hospitalization of two or more employees as a result of a work-related incident, the employer of any employees so affected, shall orally report the fatality/multiple hospitalization by telephone or in person, to the nearest office of the department or by using the OSHA toll-free central telephone number, 1-800-321-6742.

(i) This requirement applies to each such fatality or hospitalization of two or more employees which occurs within thirty days of the incident.

(ii) Exception: If any employer does not learn of a reportable incident at the time it occurs and the incident would otherwise be reportable under this subsection, the employer shall make a report within eight hours of the time the incident is reported to any agent or employee of the employer.

(iii) Each report required by this subsection shall relate the following information: Establishment name, location of the incident, time of the incident, number of fatalities or hospitalized employees, contact person, phone number, and a brief description of the incident.

(2) Recordkeeping - written reports; all fire service employers shall maintain records of occupational injuries and illnesses. Reportable cases include every occupational death, every occupational illness, or each injury that involves one of the following: Unconsciousness, inability to perform all phases of regular duty-related assignment, inability to work full time on duty, temporary assignment, or medical treatment beyond first aid.

(3) All fire departments shall record occupational injury and illnesses on forms OSHA 101-Supplementary Record Occupational Injuries and Illnesses and OSHA 200-Log summary. Forms other than OSHA 101 may be substituted for the Supplementary Record of Occupational Injuries and Illnesses if they contain the same items.

(4) Each employer shall post an annual summary of occupational injuries and illnesses for each establishment. This summary shall consist of a copy of the year's totals from the Form OSHA No. 200 and the following information from that form: Calendar year covered, company name, establishment name, establishment address, certification signature, title, and date. A Form OSHA No. 200 shall be used in presenting the summary. If no injuries or illnesses occurred in the year, zeros must be entered on the totals line, and the form must be posted. The summary shall be completed by February 1 each calendar year. The summary covering the previous calendar year shall be posted no later than February 1, and shall remain in place until March 1.

[Statutory Authority: RCW 49.17.010, [49.17].050 and [49.17].060. 96-11-067, § 296-305-01501, filed 5/10/96, effective 1/1/97.]

WAC 296-305-01503 Accident investigation. (1) After the emergency actions following accidents that cause serious injuries that have immediate symptoms, a preliminary investigation of the cause of the accident shall be conducted. The investigation shall be conducted by a person designated by the employer. The fire department shall establish a written

procedure and a program for investigating, and evaluating the facts, relating to the cause of accidents. The findings of the investigation shall be documented by the employer for reference at any following formal investigations.

(2) Within eight hours after the fatality or probable fatality of any fire fighter or employee from a work-related incident or the inpatient hospitalization of two or more employees as a result of a work-related incident, the employer of any employees so affected, shall orally report the fatality/multiple hospitalization by telephone or in person, to the nearest office of the department or by using the OSHA toll-free central telephone number, 1-800-321-6742.

(3) Equipment involved in an accident resulting in an immediate or probable fatality, shall not be moved, until a representative of the consultation and compliance services division investigates the accident and releases such equipment, except where removal is essential to prevent further accident. When necessary to remove the victim, such equipment may be moved only to the extent of making possible such removal.

(4) Upon arrival of the department's investigator, the employer shall assign to assist the investigator such personnel as are deemed necessary by the department to conduct the investigation.

(5) The fire department shall preserve all records, photographic materials, audio, video, recordings, or other documentation concerning an accident.

Reference: WAC 296-24-020 (2), (3).

[Statutory Authority: RCW 49.17.010, [49.17].050 and [49.17].060. 96-11-067, § 296-305-01503, filed 5/10/96, effective 1/1/97.]

WAC 296-305-01505 Accident prevention program. (1) All fire departments shall develop and implement a written safety program.

(2) Fire department safety programs shall have an assigned safety officer.

(3) Each employer shall develop a formal accident-prevention program, tailored to the needs of the fire department and to the type of hazards involved. The department of labor and industries' consultation and compliance services division may be contacted for assistance in developing appropriate programs.

(a) A safety orientation program describing the employer's safety program shall include:

(i) How and when to report injuries, including instruction as to the location of first-aid facilities.

(ii) How to report unsafe conditions and practices.

(iii) The use and care of required personal protective equipment.

(iv) The proper actions to take in event of emergencies including the routes of exiting from areas during emergencies.

(v) Identification of the hazardous gases, chemicals or materials involved, along with the instructions on the safe use and emergency action following accidental exposure.

(vi) A description of the employer's total safety program.

(vii) An on-the-job review of the practices necessary to perform the initial job assignments in a safe manner.

(4) Fire departments shall have a safety committee to serve in an advisory capacity to the fire chief. The number of employer-selected members shall not exceed the number of employee-elected members.

(5) The frequency of safety meetings shall be determined by the safety committee, but shall not be less than one hour per calendar quarter, however, special meetings may be held at the request of either party.

(6) Minutes shall be taken of all safety meetings. After review by the chief or his/her designee the minutes shall be conspicuously posted at all stations.

(7) Employee submitted written suggestions or complaints shall be considered. Action recommendations by the committee shall be transmitted in writing to the fire chief. The chief or his/her designated agent will reply to the submitter.

(8) Inspections of fire stations shall be made at least monthly and records maintained to ensure that stations are reasonably free of recognized hazards. These inspections shall include, but not be limited to, tools, apparatus, extinguishers, protective equipment, and life safety equipment.

[Statutory Authority: RCW 49.17.010, [49.17].050 and [49.17].060. 96-11-067, § 296-305-01505, filed 5/10/96, effective 1/1/97.]

WAC 296-305-01507 Fire department safety officer. (1) The duties and responsibilities of the fire department safety officer shall include, but are not limited to:

(a) Plan and coordinate safety activities.

(b) Work closely with the safety committee.

(c) Ensure accidents are investigated.

(d) Devise corrective measures to prevent accidents.

(2) Realizing safety training and recordkeeping are management's responsibility, the fire department safety officer shall ensure the following requirements are being met:

(a) Ensure safety training for all employees.

(b) Ensure safety directives are complied with.

(c) Ensure that records are kept, but not limited to the following:

(i) Accidents

(ii) Injuries

(iii) Inspections

(iv) Exposures

(v) Medical Monitoring

(vi) Safety meetings

(vii) Apparatus

(viii) Equipment

(ix) Protective clothing

(x) Other fire department safety activities

(3) The fire department safety officer, through the fire chief, shall have the authority and responsibility to identify and recommend correction of safety and health hazards.

(4) The fire department safety officer shall maintain a liaison with staff officers regarding recommended changes in equipment, procedures, and recommended methods to eliminate unsafe practices and reduce existing hazardous conditions.

Additional Reference: NFPA 1521 Standard for Fire Department Safety Officer, may be used as a guide for duties and responsibilities relating to the safety officer.

[Statutory Authority: RCW 49.17.010, [49.17].050 and [49.17].060. 96-11-067, § 296-305-01507, filed 5/10/96, effective 1/1/97.]

WAC 296-305-01509 Management's responsibility. (1) It shall be the responsibility of management to establish, supervise, maintain, and enforce, in a manner which is effective in practice:

(a) A safe and healthful working environment, as it applies to noncombat conditions or to combat conditions at a fire scene after the fire has been extinguished, as determined by the officer in charge.

(b) An accident prevention program as required by this chapter.

(c) Programs for training employees in the fundamentals of accident prevention.

(d) Procedures to be used by the fire department safety officer and incident commander to ensure that emergency medical care is provided for members on duty.

(e) An accident investigation program as required by this chapter.

(2) The fire department shall be responsible for providing suitable expertise to comply with all testing requirements in this chapter. Such expertise may be secured from within the fire department, from equipment and apparatus manufacturers, or other suitable sources.

(3) Members who are under the influence of alcohol or drugs shall not participate in any fire department operations or other functions. This rule does not apply to persons taking prescription drugs as directed by a physician or dentist providing such use does not endanger the worker or others.

(4) Alcoholic beverages shall not be allowed in station houses, except at those times when station houses are used as community centers, with the approval of management.

(5) A bulletin board or posting area exclusively for safety and health and large enough to display the required safety and health posters. The WISHA poster (WISHA form F416-081-000) and other safety education material shall be provided. A bulletin board of "white background" and "green trim" is recommended.

(6) The fire department shall develop and maintain a hazard communication program as required by WAC 296-800-170, which will provide information to all employees relative to hazardous chemicals or substances to which they are exposed, or may routinely be exposed to, in the course of their employment.

(7) Personnel.

(a) The employer shall assure that employees who are expected to do interior structural fire fighting are physically capable of performing duties that may be assigned to them during emergencies.

(b) The employer shall not permit employees with known physical limitations reasonably identifiable to the employer, for example, heart disease or seizure disorder, to participate in structural fire fighting emergency activities unless the employee has been released by a physician to participate in such activities.

[Statutory Authority: RCW 49.17.010, [49.17].040, and [49.17].050. 01-11-038, § 296-305-01509, filed 5/9/01, effective 9/1/01. Statutory Authority: RCW 49.17.040. 99-05-080, § 296-305-01509, filed 2/17/99, effective 6/1/99. Statutory Authority: RCW 49.17.010, [49.17].050 and [49.17].060. 96-11-067, § 296-305-01509, filed 5/10/96, effective 1/1/97.]

WAC 296-305-01511 Employee's responsibility. (1) Fire fighters shall cooperate with the employer and other employees in efforts to eliminate accidents.

(2) Each fire fighter or other employee shall comply with the provisions of this chapter which are applicable to his/her own actions and conduct in the course of his/her employment.

(3) Fire fighters and other employees shall notify the appropriate employer representative of unsafe work practices and of unsafe conditions of equipment, apparatus, or work places.

(4) Fire fighters and other employees shall apply the principles of accident prevention in their work. They shall use all required safety devices, protective equipment, and safety practices, as provided and/or developed by management.

(5) Each fire fighter shall take proper care of all personal protective equipment.

(6) Fire fighters shall attend, when on duty, required training and/or orientation programs designed to increase their competency in occupational safety and health.

(7) Fire fighters who are under the influence of alcohol or drugs shall not participate in any fire department operations or other functions. This rule does not apply to persons taking prescription drugs as directed by a physician or dentist providing such use does not endanger the worker or others.

[Statutory Authority: RCW 49.17.010, [49.17].050 and [49.17].060. 96-11-067, § 296-305-01511, filed 5/10/96, effective 1/1/97.]

WAC 296-305-01513 Safe place standards. (1) Every employer shall furnish and require the use of appropriate safety devices and safeguards. All fire fighting methods, and operations shall be so designed as to promote the safety and health of employees. The employer shall do everything reasonably necessary to protect the safety and health of employees.

(2) No fire fighter or other employee, employer or employer representative shall:

(a) Remove, displace, damage, destroy or carry off any safety device, safeguard, notice or warning furnished for use in any employment or place of employment.

(b) Interfere in any way with the use of any safety device, method or process adopted for the protection of any employee.

[Statutory Authority: RCW 49.17.010, [49.17].050 and [49.17].060. 96-11-067, § 296-305-01513, filed 5/10/96, effective 1/1/97.]

WAC 296-305-01515 First-aid training and certification. (1) All fire fighters except directors of fire departments and the directors' designated personnel, shall have as a minimum first-aid training as evidenced by a current, valid first-aid card, EMT or First Responder certification.

(2) New fire fighters shall have such first-aid training within 90 days of the date of their employment or enroll for training in the next available class for which they are eligible.

(3) Fire service duties include exposure to bloodborne pathogens. The requirements of this section and chapter 296-823 WAC, Occupational exposure to bloodborne pathogens, shall apply.

[Statutory Authority: RCW 49.17.010, 49.17.040, 49.17.050, and 49.17.060. 04-07-160, § 296-305-01515, filed 3/23/04, effective 5/1/04; 03-

09-110, § 296-305-01515, filed 4/22/03, effective 8/1/03. Statutory Authority: RCW 49.17.010, [49.17].040, and [49.17].050. 01-11-038, § 296-305-01515, filed 5/9/01, effective 9/1/01. Statutory Authority: RCW 49.17.010, [49.17].050 and [49.17].060. 96-11-067, § 296-305-01515, filed 5/10/96, effective 1/1/97.]

WAC 296-305-01517 First-aid kits. (1) To assure the emergency medical care of the fire fighters there shall be present at each emergency incident at least the following items:

1 (one) utility scissors, EMT-type

1 CPR barrier

3 (three) rolls 1 inch adhesive tape

6 (six) 4" x 4" sterile, individually wrapped gauze pads

4 (four) combination pads, sterile, individually wrapped

4 (four) soft roller bandages, assorted size, sterile, individually wrapped cling type

2 (two) burn sheets, sterile, individually wrapped

2 (two) triangular bandages

1 (one) multitrauma dressing, sterile

2 (two) supply disposable gloves

2 (two) wire splints or equivalent

(2) All fire stations shall maintain a first-aid kit. The kit shall contain at least the following items:

6 (six) 4" x 4" sterile, individually wrapped gauze pads

4 (four) combination pads, sterile, individually wrapped

2 (two) rolls 1 inch adhesive tape

4 (four) soft roller bandages, assorted size, sterile, individually wrapped cling type

2 (two) triangular bandages

1 (one) utility scissors, EMT-type

1 (one) pair tweezers

1 (one) package assorted adhesive bandages

(3) All fire apparatus shall contain a first-aid kit as described in WAC 296-800-150.

(4) All fire departments providing emergency medical services to the public shall conform to the requirements of chapter 18.73 RCW Emergency Care and Transportation Services (and if applicable, chapter 248-17 WAC, Ambulance Rules and Regulations) which require additional first-aid equipment.

Additional references: Chapter 296-800 WAC.

[Statutory Authority: RCW 49.17.010, [49.17].040, and [49.17].050. 01-11-038, § 296-305-01517, filed 5/9/01, effective 9/1/01. Statutory Authority: RCW 49.17.010, [49.17].050 and [49.17].060. 96-11-067, § 296-305-01517, filed 5/10/96, effective 1/1/97.]

WAC 296-305-02001 Personal protective equipment and protective clothing.

Note: For wildland fire fighting personal protective equipment and clothing requirements see WAC 296-305-07003, Personal protective clothing and equipment for wildland fire fighting.

(1) Employers shall provide and maintain at no cost to the employee the appropriate protective ensemble/protective clothing to protect from the hazards to which the member is or is likely to be exposed. Employers shall ensure the use of all protective equipment and clothing required by this standard. Employers shall assure that the protective clothing and equipment ordered or purchased after the effective date of this standard meets the requirements of this standard. Full protective equipment designated for the task, shall be worn for all department activities.

(2) Fire fighters shall be trained in the function, donning and doffing, care, use, inspection, maintenance and limitations of the protective equipment assigned to them or available for their use.

(3) Protective clothing and protective equipment shall be used and maintained in accordance with manufacturer's instructions. A written maintenance, repair, retirement, servicing, and inspection program shall be established for protective clothing and equipment. Specific responsibilities shall be assigned for inspection and maintenance. This requirement applies to fire fighter's personally owned equipment as well as equipment issued by the employer.

(4) The fire department shall provide for the cleaning of protective clothing and contaminated station/work uniforms at no cost to the employee. Such cleaning shall be performed by either a cleaning service, or at a fire department facility, that is equipped to handle contaminated clothing.

Note: See Appendix A.

(5) Personal protective equipment and clothing shall be of a type specified by NIOSH, MSHA, NFPA, ANSI, or as specifically referenced in the appropriate section of this chapter.

(6) Station/work uniforms. Station/work uniforms are not themselves intended as primary protective garments.

(a) Station/work uniforms if provided, shall meet the requirements as specified in the 1990 or 1994 edition of NFPA 1975.

(b) All station/work uniforms purchased after the effective date of this regulation shall meet the requirements set forth in this standard.

(c) Station/work uniforms include trousers, and/or coveralls, but exclude shirts, underwear, and socks.

(d) Members shall not wear any clothing that is determined to be unsafe due to poor thermal stability or poor flame resistance when engaged in or exposed to the hazards of structural fire fighting. Because it is impossible to ensure that every member will respond to an incident in a station/work uniform or will change out of fabrics that have poor thermal stability or ignite easily, before donning protective garments, the fire department shall inform members of the hazards of fabrics that melt, drip, burn, stick to the skin and cause burns to the wearer due to poor thermal stability or poor flame resistance.

(e) Garments meeting the requirements of WAC 296-305-07003(1), meet the intent of this section.

(f) Station/work uniforms purchased prior to the effective date of this chapter shall be acceptable for a period of two years or until the employers current inventory has been exhausted, whichever comes first.

(7) Turnout clothing/pants and coat:

Proximity clothing:

(a) All turnout clothing used as proximity clothing shall meet the requirements of NFPA, 1976 Standard on Protective Clothing for Proximity Fire Fighting, 1992 edition.

(b) There shall be at least a two-inch overlap of all layers of the protective coat and the protective trousers so there is no gaping of the total thermal protection when the protective garments are worn. The minimum overlap shall be deter-

mined by measuring the garments on the wearer, without SCBA, with the wearer in the most stretched position, hands together reaching overhead as high as possible.

(c) Single piece protective coveralls shall not be required to have an overlap of all layers as long as there is continuous full thermal protection.

(d) Fire departments that provide protective coats with protective resilient wristlets secured through a thumb opening may provide gloves of the gauntlet type for use with these protective coats. Fire departments that do not provide such wristlets attached to all protective coats shall provide gloves of the wristlet type for use with these protective coats.

(8) Structural fire fighting clothing.

(a) All turnout clothing purchased after the effective date of these regulations shall meet the requirements of the 1991 edition of NFPA, Standard on Protective Clothing for Structural Fire Fighting 1971 or the 1997 edition of NFPA, Standard on Protective Ensemble for Structural Fire Fighting 1971. In no case, shall fire fighters wear personal protective clothing manufactured prior to the 1986 edition, NFPA, Standard on Protective Clothing for Structural Fire Fighting 1971.

(b) Turnout clothing shall be maintained as specified by the manufacturer.

(c) Repairs to turnout clothing shall be done to the manufacturers specification by qualified individuals approved by the manufacturer. Repairs must be made using materials and methods in accordance with the applicable standards under which the article was produced. Repairs include any and all alterations, modifications, additions, deletions or any other change made to the manufacturers PPE article.

(d) Turnout clothing which is damaged or does not comply with this section shall not be used.

(e) All turnout clothing shall be inspected semi-annually by an individual qualified by the employer. Inspection intervals shall not exceed six months.

[Statutory Authority: RCW 49.17.040. 99-05-080, § 296-305-02001, filed 2/17/99, effective 6/1/99. Statutory Authority: RCW 49.17.010, [49.17].050 and [49.17].060. 96-11-067, § 296-305-02001, filed 5/10/96, effective 1/1/97.]

WAC 296-305-02003 Eye and face protection. (1) Face and eye protection shall be provided for and used by fire fighters engaged in fire suppression and other operations involving hazards to the eye and face at all times when the face is not protected by the full facepiece of the SCBA. Primary face and eye protection appropriate for a given specific hazard shall be provided for, and used by, members exposed to that specific hazard. Such primary face and eye protection shall meet the requirements of ANSI Z87.1, 1989 edition.

(2) Persons whose vision requires the use of corrective lenses in spectacles, and who are required by this standard to wear eye protection, shall wear goggles or spectacles of one of the following types:

(a) Spectacles with protective lenses that provide optical correction.

(b) Goggles that can be worn over corrective spectacles without disturbing the adjustment of the spectacles.

(c) Goggles that incorporate corrective lenses mounted behind the protective lens.

(3) When limitations or precautions are indicated by the manufacturer, they shall be transmitted to the user and care taken to see such limitations and precautions are strictly observed.

(4) Care, use, and maintenance for any type of eye or face protection shall follow the manufacturers suggested recommendations.

(5) Goggles shall be inspected, cleaned and disinfected prior to being reissued to other employees.

Note: The helmet face shield alone does not always provide adequate eye protection against flying particles, splash, gases and vapors. For known eye hazards, such as, but not limited to, cutting with power saws, chopping, drilling and using extrication equipment, the face shield should be worn with additional eye protection.

(6) Helmet face shields shall meet the requirements of NFPA, Standard Helmets for Structural Fire Fighting 1972, 1992 edition.

(7) For fire fighters that do not have a helmet face shield for eye and face protection, flexible or cushioned fitting goggles shall be provided.

(8) Goggles shall consist of a wholly flexible frame, forming a lens holder or a rigid frame with integral lens or lenses, having a separate, cushioned fitting surface on the full periphery of the facial contact area.

(a) Materials used shall be chemical-resistant, nontoxic, nonirritating and slow burning.

(b) There shall be a positive means of support on the face, such as an adjustable headband of suitable material or other appropriate means of support to retain the frame comfortable and snugly in front of the eyes.

[Statutory Authority: RCW 49.17.040. 99-05-080, § 296-305-02003, filed 2/17/99, effective 6/1/99. Statutory Authority: RCW 49.17.010, [49.17].050 and [49.17].060. 96-11-067, § 296-305-02003, filed 5/10/96, effective 1/1/97.]

WAC 296-305-02005 Hearing protection. Fire departments must address noise issues as required by chapter 296-817 WAC, Hearing loss prevention (noise).

Note: Although noise levels may exceed the 115 dBA ceiling limit for noise exposures during structural fire fighting activities, hearing protection that will survive these conditions and not interfere with other essential gear may not always be available. Fire departments must consider daily noise exposures and exposures to noise outside direct fire fighting activities when selecting hearing protection and may use less protection during direct fire protection when adequate hearing protection is not technically feasible.

[Statutory Authority: RCW 49.17.010, 49.17.040, 49.17.050, and 49.17.060. 03-11-060, § 296-305-02005, filed 5/19/03, effective 8/1/03. Statutory Authority: RCW 49.17.010, [49.17].050 and [49.17].060. 96-11-067, § 296-305-02005, filed 5/10/96, effective 1/1/97.]

WAC 296-305-02007 Hand protection. (1) Fire fighters' gloves shall when worn with turnout clothing, provide protection to the wrist area. In turnout clothing where wristlet protection is not provided fire fighters' gloves shall be closed at the top.

(2) Fire departments shall establish written policy and procedure for the care, use, cleaning, replacement and/or retirement criteria, and maintenance of gloves issued.

(3) Gloves purchased after the effective date of this chapter shall comply with this section.

(4) Fire fighters' gloves used during structural fire fighting operations including rescue of victims from fires, and emergency medical operations where sharp or rough surfaces

are likely to be encountered such as victim extrications shall meet the requirements of the 1993 edition of NFPA, Standard on Gloves for Structural Fire Fighting 1973 or the 1997 edition of NFPA, Standard on Protective Ensemble for Structural Fire Fighting 1971.

(5) Fire fighters gloves are not designed to provide protection to all environments. For gloves desired to fill the needs of a specific requirement see that specific section of this chapter. It is the intent of this section to provide protection from intrusion throughout the glove body by certain common chemicals, and from bloodborne pathogens. Fire departments shall consult the manufacturer's recommendation.

Note: Fire fighters should have their hands sized for compliance with the sizing chart as specified in NFPA, Standard on Gloves for Structural Fire Fighting 1973, 1993 edition.

[Statutory Authority: RCW 49.17.040. 99-05-080, § 296-305-02007, filed 2/17/99, effective 6/1/99. Statutory Authority: RCW 49.17.010, [49.17].050 and [49.17].060. 96-11-067, § 296-305-02007, filed 5/10/96, effective 1/1/97.]

WAC 296-305-02009 Body protection. (1) Body protection shall be coordinated with torso, hand, head, foot, respiratory, and face protection as outlined in WAC 296-305-02001 through 296-305-02019.

(2) Fire departments shall establish written procedures for the use of components of any or all portions of protective equipment.

(3) Fire departments that provide structural and wildfire suppression shall establish written procedures for the use of protective clothing on structural and wildfire suppression activities.

[Statutory Authority: RCW 49.17.010, [49.17].050 and [49.17].060. 96-11-067, § 296-305-02009, filed 5/10/96, effective 1/1/97.]

WAC 296-305-02011 Body armor. Fire departments that use protective body armor shall comply with the following:

(1) The fire department shall develop and have in place written guidelines for the care, use and maintenance of the protective body armor in conjunction with the manufacturer's recommendations.

(2) All protective body armor shall meet or exceed National Institute of Justice NIF 0101.03, Threat Level II requirements, April 1987 edition, which is incorporated by reference (or shall be demonstrated by the employer to be equally effective), for both wet and dry ballistic performance.

(3) Body armor shall be correctly fitted following the manufacturer's recommendations and shall not be used beyond the manufacturer's warranty.

[Statutory Authority: RCW 49.17.010, [49.17].050 and [49.17].060. 96-11-067, § 296-305-02011, filed 5/10/96, effective 1/1/97.]

WAC 296-305-02013 Foot protection for structural fire fighting. (1) Protective footwear purchased after the effective date of this standard shall comply with the 1992 edition of NFPA, Standard on Protective Footwear for Structural Fire Fighting 1974 or the 1997 edition of NFPA, Standard on Protective Ensemble for Structural Fire Fighting 1971.

(2) Fire departments shall establish written policy and procedure, care, use, maintenance, and retirement criteria for footwear in conjunction with the manufacturer's recommendations.

Note: Fire departments should establish cleaning and drying instruction including applicable warning regarding detergents, soaps, cleaning additives and bleaches for protective footwear.

(3) Fire fighter footwear may be resoled but the footwear upon resoling shall meet the requirements specified in this section.

[Statutory Authority: RCW 49.17.040. 99-05-080, § 296-305-02013, filed 2/17/99, effective 6/1/99. Statutory Authority: RCW 49.17.010, [49.17].050 and [49.17].060. 96-11-067, § 296-305-02013, filed 5/10/96, effective 1/1/97.]

WAC 296-305-02015 Head protection. (1) Fire fighters who engage in or are exposed to the hazards of structural fire fighting shall be provided with and use helmets that meet the requirements of NFPA 1972, Standard on Helmets for Structural Fire Fighting, 1987 edition.

(2) Helmets purchased thirty days after the adoption of this chapter shall meet the requirements of the 1992 edition of NFPA, Standard on Helmets for Structural Fire Fighting 1972 or the 1997 edition of NFPA, Standard on Protective Ensemble for Structural Fire Fighting 1971.

(3) Fire departments shall establish a written policy and procedure for the care, use, maintenance, and retirement criteria for helmets.

(4) Helmets shall be provided with face shields or goggles.

(5) Helmet accessories shall not interfere with the function of the helmet or its components parts and shall not degrade the helmets performance.

(6) Helmets shall be maintained in accordance with the manufacturer's recommendations. No modifications shall be made without prior written approval from the manufacturer.

(7) Fire fighters shall follow the manufacturer's recommendations regarding cleaning, painting, marking, storage, and frequency and details of inspection.

Note: Helmets should be stored at room temperature and out of direct sunlight.

[Statutory Authority: RCW 49.17.040. 99-05-080, § 296-305-02015, filed 2/17/99, effective 6/1/99. Statutory Authority: RCW 49.17.010, [49.17].050 and [49.17].060. 96-11-067, § 296-305-02015, filed 5/10/96, effective 1/1/97.]

WAC 296-305-02017 Personal alert safety system (PASS) protection. (1) Each fire fighter working in a hazardous area requiring the use of SCBA shall wear and use a PASS device. PASS devices shall meet the requirements of NFPA, Standard on Personal Alert Safety Systems (PASS) for Fire Fighters 1982, 1993 edition. (See WAC 296-305-07001 through 296-305-07019 for wildland fire fighting application.)

(2) Each PASS device shall be tested routinely to ensure it is ready for use and immediately prior to each use, and shall be maintained in accordance with the manufacturers' instructions.

(3) Fire departments shall provide written procedures for the use of PASS devices.

(4) Compliance with this section shall occur no later than two years after the effective date of this chapter.

Note: Fire departments should provide one spare PASS device for each ten units in service. If a department has less than ten devices they should have one spare.

(5) Fire departments shall establish a written procedure for the care, use, maintenance, and repair of PASS devices in conjunction with manufacturer's recommendations.

[Statutory Authority: RCW 49.17.010, [49.17].050 and [49.17].060. 96-11-067, § 296-305-02017, filed 5/10/96, effective 1/1/97.]

WAC 296-305-02019 Life safety ropes, harnesses, and hardware protection. (1) All life safety ropes, harnesses, and hardware used by fire departments shall meet the applicable requirements of NFPA 1983, Standard on Fire Service Life Safety Rope, Harness, and Hardware, 1990 edition.

(2) Ropes used to support the weight of members or other persons during rescue, fire fighting, other emergency operations, or during training evolutions shall be life safety rope.

(3) Life safety rope used for rescue at fires, or other emergency incidents, or for training, shall be permitted to be reused if inspected before, and after, each such use in accordance with the manufacturer's instructions and provided:

(a) The rope has not been visually damaged by the exposure to heat, direct flame impingement, chemical exposure, or abrasion.

(b) The rope has not been subjected to any impact load.

(c) The rope has not been exposed to chemical liquids, solids, gases, mists, or vapors of any materials, known to deteriorate rope.

(d) If the rope used for rescue at fires or other emergency incidents, or for training, has been subjected to (a), (b), or (c) of this section, or fails the visual inspection, it shall be destroyed after such use.

(e) If there is any question regarding the serviceability of the rope after consideration of the above, the safe course of action shall be taken and the rope shall be placed out of service. See Appendix B.

(f) Rope inspection shall be conducted by qualified inspectors in accordance with rope inspection procedures established and recommended as adequate by the rope manufacturer to assure rope is suitable for reuse.

(4) Fire departments shall establish written procedures for the use of life safety ropes and rescue operations utilizing harnesses and ropes.

(5) Records shall provide a history of each life safety and training rope. The minimum information to be reflected in the record of history of life safety and training ropes shall include: Date of manufacturer, organization serial number, use list to include inspectors name and space for comments.

(6) Rope used for training evolutions shall be designated as training rope and shall be permitted to be reused if inspected before and after each use in accordance with the manufacturer's instructions.

(7) The destruction of a rope means that it shall be removed from service and altered in such a manner that it could not be mistakenly used as a life safety rope. This includes disposal or removal of labels and cutting into short lengths to be used for utility purposes.

(8) All repairs to life safety harnesses shall be done by an authorized manufacturer's representative, or the manufacturer.

Note: See WAC 296-305-06003 (3), (4), (5), and (6) for the testing of life belts, ropes, and harnesses.

(9) Class I safety harnesses shall be used for fire fighter attachment to ladders and aerial devices.

(10) Class II and Class III life safety harnesses shall be utilized for fall arrest and rappelling operations.

(11) Rescue ropes shall be padded when deployed over edges or rough surfaces.

Note: See WAC 296-305-05005 for rope rescue applications.

[Statutory Authority: RCW 49.17.010, [49.17].050 and [49.17].060. 96-11-067, § 296-305-02019, filed 5/10/96, effective 1/1/97.]

WAC 296-305-02501 Emergency medical protection. (1) Fire fighters who perform emergency medical care or otherwise may be exposed to blood or other body fluids shall be provided with emergency medical face protection devices, and emergency medical garments that meet the applicable requirements of NAPA, Standard on Protective Clothing for Emergency Medical Operations 1999, 1992 edition.

Note: Prior to purchase, fire departments should request the technical data package required in NAPA 1999, 1992 edition, in order to compare glove and garment performance data. Departments reviewing these packages should ensure a relative ranking of the performance data before they purchase in order to provide the best performance of the EMS personal protective clothing.

(2) Fire fighters shall don emergency medical gloves prior to initiating any emergency patient care.

(3) Fire fighters shall don emergency medical garments and emergency medical face protection devises prior to any patient care during which splashes of body fluids can occur such as situations involving spurting blood or childbirth.

Note: Fire fighter turnout gear and gloves with vapor barriers may be used in lieu of emergency medical gloves and garments.

(4) Contaminated emergency medical garments, emergency medical face protection, gloves, devices, and emergency medical gloves shall be cleaned and disinfected, or disposed of, in accordance with chapter 296-823 WAC, Occupational exposure to bloodborne pathogens.

(5) Fire departments shall establish a designated infection (exposure) control officer who shall ensure that an adequate infection control plan is developed and all personnel are trained and supervised on the plan.

(6) The infection control officer shall be responsible for establishing personnel exposure protocols so that a process for dealing with exposures is in writing and available to all personnel.

(7) The infection control officer or his/her designee will function as a liaison between area hospitals and fire department members to provide notification that a communicable disease exposure is suspected or has been determined by hospital medical personnel. The department infection control officer will institute the established exposure protocols immediately after report of an exposure. The infection control officer shall follow the confidentiality requirements of chapter 246-100 WAC and the medical protocol requirements of chapter 296-802 WAC.

(8) Fire departments shall have a written infection (exposure) control plan which clearly explains the intent, benefits, and purpose of the plan. The written document must cover the standards of exposure control such as establishing the infection control officer and all members affected; education and training; HB. vaccination requirements; documentation and record keeping; cleaning/disinfection of personnel and equipment; and exposure protocols.

(9) Policy statements and standard operating procedure guidelines shall provide general guidance and specific regulation of daily activities. Procedures shall include delegation of specific roles and responsibilities, such as regulation of infection control, as well as procedural guidelines for all required tasks and functions.

(10) Fire departments shall establish a records system for members health and training.

(11) Fire fighters shall be trained in the proper use of P.E., exposure protection, post exposure protocols, disease modes of transmission as it related to infectious diseases.

(12) Infectious disease programs shall have a process for monitoring fire fighters compliance with established guidelines and a means for correcting noncompliance.

(13) Fire department members shall be required to annually review the infectious disease plan, updates, protocols, and equipment used in the program.

(14) Fire departments shall comply with chapter 296-823 WAC, Occupational exposure to bloodborne pathogens, in its entirety.

(15) Tuberculosis (TB) exposure and respiratory protection requirements.

(a) Fire fighters shall wear a particulate respirator (PR) when entering areas occupied by individuals with suspected or confirmed TB, when performing high risk procedures on such individuals or when transporting individuals with suspected or confirmed TB in a closed vehicle.

(b) A NOSH-approved, 95% efficient particulate air respirator is the minimum acceptable level of respiratory protection.

(i) Fit tests are required.

(ii) Fit tests shall be done in accordance with chapter 296-62 WAC, Part E.

Note 1: Emergency-response personnel should be routinely screened for tuberculosis at regular intervals. The tuberculin skin test is the only method currently available that demonstrates infection with Mycobacterium tuberculosis (M. tuberculosis) in the absence of active tuberculosis.

Note 2: If possible, the rear windows of a vehicle transporting patients with confirmed, suspected, or active tuberculosis should be kept open, and the heater or air conditioner set on a noncirculating cycle.

Additional References:

Chapter 296-823 WAC, Occupational exposure to bloodborne pathogens.

WAC 296-62-08001(3), Exposure Control.

[Statutory Authority: RCW 49.17.010, 49.17.040, 49.17.050, and 49.17.060. 04-10-026, § 296-305-02501, filed 4/27/04, effective 8/1/04; 03-09-110, § 296-305-02501, filed 4/22/03, effective 8/1/03. Statutory Authority: RCW 49.17.010, [49.17].040 and [49.17].050. 99-10-071, § 296-305-02501, filed 5/4/99, effective 9/1/99. Statutory Authority: RCW 49.17.010, [49.17].050 and [49.17].060. 96-11-067, § 296-305-02501, filed 5/10/96, effective 1/1/97.]

WAC 296-305-03001 Hazardous materials protection. (1) Structural fire fighting protective clothing shall not be used as primary protection for hazardous material incidents except as noted in the current edition of the Department of Transportation Emergency Response guidebook, which is incorporated by reference or shall be demonstrated by the employer to be equally effective.

(2) Fire departments shall use the technical data package provided by the clothing manufacturer when selecting the hazardous chemical protection.

(a) The approach to selecting personal protective clothing must encompass an ensemble of clothing items that are integrated to provide a level of protection and the ability to carry out emergency response activities.

(b) The following is a check list of components that may form the chemical protective ensemble:

(i) Protective clothing (suits, coveralls, hoods, gloves, boots)

(ii) Respiratory equipment (SCBA)

(iii) Cooling system (ice vest, air circulation, water circulation)

(iv) Head protection

(v) Inner garments

(vi) Outer protection (overgloves, overboots, flashcovers)

(3) Hazardous chemical protective equipment shall be classified by performance and for the purpose of this chapter are defined as:

(a) Vapor-Protective Suits (Level "A")

(b) Liquid Splash-Protective Suits (Level "B")

(c) Support Function Protective Suits

(4) Fire department personnel involved in hazardous materials incident shall be protected against potential chemical hazards. Chemical protective clothing shall be selected and used to protect the respiratory system, skin, eyes, face, hands, feet, head, and body.

(5) Vapor protective and liquid splash-protective suits shall completely cover both the wearer and the wearer's breathing apparatus. Wearing a SCBA or other respiratory equipment outside the suit subjects this equipment to the chemically contaminated environment, increasing possible failure potentials and decontamination problems.

(6) Fire fighters who engage in operations likely to result in significant exposure to vapors that can reasonably be presumed harmful by way of dermal exposure shall have available and make appropriate use of vapor protective suits. Vapor protective suits shall meet the requirements of NFPA, Standard on Vapor Suits for Hazardous Chemical Emergencies in 1991, 1990 edition, with the single exception that suits meeting all but the flammability standard may only be worn in atmospheres verified by means of appropriate air monitoring to be at no more than 10% of the lower explosive limit (LEL).

(7) Prior to the use of vapor protective suits, liquid splash-protective suits or support function protective suits, the department shall consult the technical data package to assure that the garment is appropriate for the specific hazardous chemical emergency.

(8) Vapor protective suits and liquid splash-protective suits shall not be used alone for any fire fighting applications

or for protection from radiological, biological, or cryogenic agents or in flammable or explosive atmospheres.

(9) Fire fighters who engage in operations or who are exposed to known chemicals in liquid-splash chemical environments during hazardous chemical material emergencies shall be provided with, and shall use, liquid splash-protective suits. Liquid splash-protective suits shall meet the requirements of NFPA, Standard on Liquid-Splash Protective Suits for Hazardous Chemical Emergencies 1992, 1991 edition.

(10) Liquid splash-protective suits shall not be used when operations are likely to result in significant exposure to chemicals or specific chemical mixtures with known or suspected carcinogenicity as indicated by any one of the following documents if it can reasonably be expected that fire fighters in vapor protective suits would be significantly better protected:

(a) N. Irving Sax, Dangerous Properties of Industrial Chemicals, current edition.

(b) NIOSH Pocket Guide to Chemical Hazards, current edition.

(c) U.S. Coast Guard Chemical Hazard Response Information System (CHRIS), Volumes 13, Hazardous Chemical Data.

(11) Liquid splash-protective suits shall not be used when operations are likely to result in significant exposure to chemicals or specific chemical mixtures with skin toxicity notations as indicated by the American Conference of Government Industrial Hygienists (ACGIH), Threshold Limit Values and Biological Exposure Indices for 1988-1989 if it can reasonably be expected that fire fighters in vapor protective suits would be significantly better protected.

(12) Support garments shall not be used in the hot zone of any hazardous material operation.

(13) Fire fighters assigned to functional support operations outside the hot zone during hazardous chemical emergencies shall be provided with and shall use support function protective garments. Support function garments shall meet the requirements of NFPA, Standard on Support Function Protective Garments for Hazardous Chemical Operations 1993, 1990 edition.

(14) Support function protective garments shall not be used for protection from chemical or specific chemical mixture with known or suspected carcinogenicity as indicated by (10)(a), (b), or (c).

(15) Support function protective garments shall not be used for protection from chemicals or specific chemical mixtures with skin toxicity notations as indicated in the American Conference of Governmental Industrial Hygienists, Threshold Values and Biological Exposure Indices for 1988-1989.

Note: Decontamination - See Appendix C.

Additional References: WAC 296-305-05011, Hazardous materials operations.

[Statutory Authority: RCW 49.17.010, [49.17].050 and [49.17].060. 96-11-067, § 296-305-03001, filed 5/10/96, effective 1/1/97.]

WAC 296-305-04001 Respiratory equipment protection. (1) Fire fighter's self-contained breathing apparatus (SCBA) shall:

(a) Be pressure demand type (positive pressure);

(b) Operate in the positive pressure mode only;

(c) Have a minimum of thirty minutes service duration;

(d) Be NIOSH certified; and

(e) Meet the requirements of the 1992 or 1997 edition of NFPA, Standard on Open Circuit Self Contained Breathing Apparatus for Fire Fighters 1981.

(2) Closed circuit SCBA shall:

(a) Be positive pressure;

(b) Be NIOSH certified; and

(c) Have a minimum thirty-minute service duration.

(3) Members using SCBA's shall operate in teams of two or more.

(4) Except as otherwise provided in this chapter, fire departments shall adopt, maintain and implement a written respiratory protection program that addresses the requirements of chapter 296-62 WAC, Part E, Respiratory protection and Part I-1, Asbestos, Tremolite, Anthophyllite, and Actinolite. This includes program administration, medical limitations, equipment limitations, equipment selection, inspection, use, maintenance, training, fit testing procedures, air quality, and program evaluation.

Note: Additional information on respirators and respirator usage can be found in ANSI Z88.2 - American National Standard for Respiratory Protection; ANSI Z88.5 - Practices for Respiratory Protection for Fire Service; various NFPA publications (1981, 1404, 1500, etc.), and the Washington State Fire Service Training Program for respiratory training and usage.

(5) When fire departments purchase compressed breathing air from a vendor, the fire department shall require the vendor to provide certification and documentation of breathing air quality as specified in subsection (21) of this section and in chapter 296-62 WAC, Part E.

(6) When the fire department makes its own breathing air or uses vendor purchased breathing air, the air quality from compressors, cascade systems cylinders, shall be tested at least quarterly as specified in subsection (21) of this section.

(7) Fit testing shall be conducted in accordance with this section and chapter 296-62 WAC, Part E, Respiratory protection.

(a) Each new member shall be tested before being permitted to use SCBA's in a hazardous atmosphere.

(b) Only fire fighters with a properly fitting facepiece shall be permitted by the fire department to function in a hazardous atmosphere with SCBA. (Reference WAC 296-62-07170 Respiratory Sealing Problems.)

(c) Fit testing shall be repeated:

(i) At least once every twelve months.

(ii) Whenever there are changes in the type of SCBA or facepiece used.

(iii) Whenever there are significant physical changes in the user. Example: Weight change of ten percent or more, scarring of face seal area, dental changes, cosmetic surgery, or any other condition that may affect the fit of the facepiece seal.

(d) The fit testing is done only in a negative-pressure mode. If the facepiece is modified for fit testing, the modification shall not affect the normal fit of the device. Such modified devices shall only be used for fit testing.

(e) The fit test procedures and test exercises described in WAC 296-62-07162, Asbestos, Appendix C, shall be followed unless stated otherwise in this chapter.

(f) Respirator fit test records shall include:

(i) Written guidelines for the respirator fit testing program including pass/fail criteria;

(ii) Type of respirator tested including manufacturer, model, and size;

(iii) Type of fit test and instrumentation or equipment used;

(iv) Name or identification of test operator;

(v) Name of person tested;

(vi) Date of test; and

(vii) Results of test.

Note: Fire fighters should be issued individual facepieces.

(8) Facial hair, contact lenses, and eye and face protective devices.

(a) A negative pressure respirator, any self-contained breathing apparatus, or any respirator which is used in an atmosphere immediately dangerous to life or health (IDLH) equipped with a facepiece shall not be worn if facial hair comes between the sealing periphery of the facepiece and the face or if facial hair interferes with the valve function.

(b) The wearer of a respirator shall not be allowed to wear contact lenses if the risk of eye damage is increased by their use.

(c) If a spectacle, goggle, or face shield must be worn with a facepiece, it shall be worn so as to not adversely affect the seal of the facepiece to the face. See WAC 296-62-07170(2).

(d) Straps or temple bars shall not pass between the seal or surface of the respirator and the user's face.

(9) At the end of suppression activities (to include fire overhaul) and before returning to quarters:

(a) Fire fighters shall be decontaminated prior to removal of respirators whenever fire fighting activities resulted in exposure to a hazardous substance.

(b) When exchanging air supply bottles during suppression or overhaul activities, reasonable precautions shall be taken to maintain uncontaminated atmosphere to the breathing zone and facepiece supply hose.

(10) Self-contained respiratory equipment shall be available and used by all fire fighters who enter into hazardous atmospheres during structural fire fighting activities.

(11) Positive pressure air line respirators may be used only for atmospheres other than IDLH and must be equipped with a five minute minimum capacity positive pressure escape bottle.

(a) If the service life of the auxiliary air supply is fifteen minutes or less it shall not be used for entry into an IDLH atmosphere but it may be used for escape purposes. The auxiliary air supply may be used for entry into an IDLH atmosphere only when the service life of the unit exceeds fifteen minutes and when not more than twenty percent of the noted air supply will be used during entry.

(b) The maximum length of hose for supplied air respirators is 300 feet (91 meters). Such hose shall be heavy duty nonkinking and NIOSH approved.

(12) Respirators shall be provided for, and shall be used by, all personnel working in areas where:

(a) The atmosphere is hazardous;

(b) The atmosphere is suspected of being hazardous; or

(c) The atmosphere may rapidly become hazardous;

(13) Anytime fire fighters are working inside a confined space, such persons shall be provided with SCBA or air line respirator with escape bottle, and shall use the equipment unless the safety of the atmosphere can be established by testing and continuous monitoring.

(14) Fire fighters using a properly functioning SCBA shall not compromise the protective integrity of the SCBA by removing the facepiece for any reason in hazardous atmospheres or in atmospheres where the quality of air is unknown.

(15) Fire fighters shall receive training for each type and manufacturer of respiratory equipment available for their use, the step-by-step procedure for donning the respirator and checking it for proper function. Required training shall include:

(a) Recognizing hazards that may be encountered;

(b) Understanding the components of the respirator;

(c) Understanding the safety features and limitations of the respirator; and

(d) Donning and doffing the respirator.

(16) After completing such training, each fire fighter shall practice at least quarterly, for each type and manufacture of respirator available for use, the step-by-step procedure for donning the respirator and checking it for proper function.

(17) Members shall be tested at least annually on the knowledge of respiratory protection equipment operation, safety, organizational policies and procedures, and facepiece seals, to the fire department's standard. Such records shall remain part of the member training file.

(18) Members shall be allowed to use only the make, model, and size respirator for which they have passed a fit test within the last twelve months.

(19) In cases where there is a reported failure of a respirator, it shall be removed from service, tagged and recorded as such, and tested before being returned to service.

(20) Fire fighters shall be thoroughly trained in accordance with the manufacturer's instructions on emergency procedures such as use of regulator bypass valve, corrective action for facepiece and breathing tube damage, and breathing directly from the regulator (where applicable).

(21) Compressed gaseous breathing air in the SCBA cylinder shall meet the requirements of ANSI/CGA G7.1 - Commodity Specification for Air, with a minimum air quality of grade D, as well as meeting a water vapor level of 24 ppm or less.

(22) SCBA cylinders shall be hydrostatically tested within the periods specified by the manufacturer and the applicable governmental agencies.

Additional reference: Chapter 296-62 WAC, Part E.

[Statutory Authority: RCW 49.17.010, [49.17].040, [49.17].050. 02-12-098, § 296-305-04001, filed 6/5/02, effective 8/1/02. Statutory Authority: RCW 49.17.040. 99-05-080, § 296-305-04001, filed 2/17/99, effective 6/1/99. Statutory Authority: RCW 49.17.010, [49.17].050 and [49.17].060. 96-11-067, § 296-305-04001, filed 5/10/96, effective 1/1/97.]

WAC 296-305-04501 Automotive fire apparatus design and construction. (1) All new fire apparatus with the exception of specialized equipment, shall conform to the fol-

lowing minimum safety standards contained in NFPA Booklets No. 1901, 1902, 1903, 1904, and other 1900's.

(2) Fire apparatus, purchased after December 17, 1977, weighing 10,000 pounds or more shall conform with the following U.S. Department of Transportation standards, when applicable:

(a) 49 CFR Ch. V (10-93 edition) 571.121 "Air brake systems";

(b) 49 CFR Ch. V (10-93 edition) 571.106 "Hydraulic brake hoses";

(c) 49 CFR Ch. V (10-93 edition) 571-211 "Hydraulic brake hoses."

(3) Employers acquiring used apparatus or used equipment shall not be required to bring it under a more stringent code than the one in force at the time the apparatus was manufactured. However, such vehicle must meet applicable U.S. Department of Transportation standards and WAC 296-24-233.

(4) Fire apparatus tailboards and steps shall have a nonskid rough surface.

(5) Exhaust systems shall be installed and maintained in proper condition, and shall be so designed as to minimize the exposure of the fire fighter to the exhaust gases and fumes.

(6) Spinner knobs shall not be attached to the steering handwheel of fire apparatus.

(7) The transmission shifting pattern of the apparatus shall be clearly stenciled or labeled and posted so it can be clearly read by the driver while operating the apparatus.

(8) The height of any apparatus, over seven feet in height from the ground to the top of the beacon or highest point of the apparatus, shall be clearly labeled in a place where it can be easily and clearly read by the driver while operating the apparatus.

(9) All apparatus in excess of 10,000 pounds loaded weight, shall have the weight of the vehicle in pounds and tons clearly labeled in a place where it can be easily and clearly read by the driver while operating the apparatus.

[Statutory Authority: RCW 49.17.040. 99-05-080, § 296-305-04501, filed 2/17/99, effective 6/1/99. Statutory Authority: RCW 49.17.010, [49.17].050 and [49.17].060. 96-11-067, § 296-305-04501, filed 5/10/96, effective 1/1/97.]

WAC 296-305-04503 Automotive fire apparatus equipment. (1) Vehicles used to transport fire fighters and employer representatives shall have compartments for carrying sharp tools, saws, chisels, axes, etc., or if carried on the outside of the apparatus, equipment with sharp points and edges shall be covered to prevent injury to fire fighters and employer representatives.

(2) Personnel restraints for traveling.

(a) All persons riding on fire apparatus shall be seated and secured to the vehicle by seatbelts or safety harnesses at any time the vehicle is in motion.

(b) Seatbelts shall comply with U.S. Department of Transportation Part 49 CFR Section 571, Standards 209 and 210.

(c) Riding on tailsteps or in any other exposed position such as sidesteps or running boards shall be specifically prohibited.

(d) Standing while riding shall be specifically prohibited.

(e) Members actively performing necessary emergency medical care while the vehicle is in motion shall be restrained to the extent consistent with the effective provision of such emergency medical care. All other persons in the vehicle shall be seated and belted in approved seating positions while the vehicle is in motion.

(f) Fire departments permitting hose loading operations while the vehicle is in motion shall develop a written policy and guidelines addressing all safety aspects.

Note: Policy and operating guidelines should address:

- The assigning of a member as a safety observer who should have an unobstructed view of the hose loading operation and be in visual and voice contact with the driver.
- Allowed maximum fire apparatus speed when hose loading;
- Control of nonfire department vehicular traffic; and
- Allowing members in the hose bed, but limit standing to only when the vehicle is not moving.

Note: See WAC 296-305-07011(3) for exceptions for wildland vehicles.

(3) Each fire apparatus shall carry a current U.S. Department of Transportation chemical identification book or the equivalent.

(4) Ladders stowed on the sides of apparatus, which protrude past the tailboard, shall have guards over the protruding ends.

(5) No employer shall permit automotive fire apparatus equipment which has an obstructed view to the rear, to be used in reverse gear unless the equipment has in operation a reverse signal alarm distinguishable from the surrounding noise level.

[Statutory Authority: RCW 49.17.040. 99-05-080, § 296-305-04503, filed 2/17/99, effective 6/1/99. Statutory Authority: RCW 49.17.010, [49.17].050 and [49.17].060. 96-11-067, § 296-305-04503, filed 5/10/96, effective 1/1/97.]

WAC 296-305-04505 Automotive apparatus operational rules. (1) Each employer of staffed fire apparatus shall establish a written policy and procedure whereby the apparatus has a scheduled daily operational check. Each employer of unstaffed fire apparatus shall establish a schedule appropriate to that department's activities.

(2) Any item found to be in need of repair shall be reported immediately to the officer in charge or other appropriate person.

(3) Fire fighting apparatus shall be brought to a full stop before employees are allowed to step from the apparatus.

(4) Fire fighters shall not be in the apparatus hose bed while hose is being run out from the bed.

(5) Headlights shall be on at all times when any fire or emergency vehicle is responding to a call.

(6) All apparatus over 20,000 pounds (gross vehicle weight) shall utilize wheel blocks when parked at an emergency scene.

(7) Apparatus responding to alarms shall meet specifications in RCW 46.61.035, relating to operations of authorized emergency vehicles.

(8) All operators of emergency vehicles shall be trained in the operations of apparatus before they are designated as drivers of such apparatus. The training program shall be

established by each fire department. Once trained, all operators shall familiarize themselves with any apparatus prior to operating such apparatus even for brief periods of time.

Additional Reference: Washington State Fire Protection Bureau - Emergency Vehicle Accident Prevention (EVAP) program.

[Statutory Authority: RCW 49.17.010, [49.17].050 and [49.17].060. 96-11-067, § 296-305-04505, filed 5/10/96, effective 1/1/97.]

WAC 296-305-04507 Fire apparatus maintenance and repair. (1) If at any time a fire apparatus is found to be in an unsafe condition, it shall be reported immediately to the officer on duty.

(2) If in the officer's determination, the apparatus cannot be used in a safe manner, it shall be taken out of service until it has been restored to a safe operating condition.

(3) All repairs and preventive maintenance to fire apparatus shall only be made by personnel deemed qualified by the registered owners of the fire apparatus.

(a) A preventive maintenance program shall be instituted and records maintained for each individual apparatus in order to record and track potential or on-going problems.

(b) A minimum annual service test of apparatus shall be made according to NFPA guidelines relating to pumper apparatus.

(c) Failure of any portion of the annual service test shall constitute the apparatus to be placed out of service as a pumper until adequate repairs are made and the apparatus successfully completes said tests.

[Statutory Authority: RCW 49.17.010, [49.17].050 and [49.17].060. 96-11-067, § 296-305-04507, filed 5/10/96, effective 1/1/97.]

WAC 296-305-04509 Aerial ladders. (1) When operating aerial ladders, the manufacturer's suggested procedures shall be followed.

(2) Aerial ladders shall be used according to the following requirements:

(a) The number of fire fighters permitted on aerial ladders shall be in accordance with the manufacturer's instructions.

(b) Aerial ladders shall not knowingly be positioned under dangerous cornices or other loose overhanging objects that may endanger fire fighters and fire fighters working on, or climbing the ladders, except where rescue operations are essential.

(c) When working on, or near energized electrical lines, the following minimum working clearances shall be observed:

(i) For lines rated 50 kv or below, the minimum clearance between the lines and any part of the equipment shall be ten feet.

(ii) For lines rated over 50 kv, the minimum clearance shall be ten feet plus 0.4 inch for each 1 kv.

(iii) For low voltage lines (operating at 750 volts or less), the work shall be performed in a manner to prevent the fire fighters contacting the energized conductor.

(d) Fire apparatus aerial ladders shall be positioned for the greatest stability feasible at the fire scene.

(e) The tip of the aerial ladder shall not be forcefully extended against a solid structure.

(f) Aerial ladders shall not be extended or retracted while fire fighters are climbing the ladder.

(g) Locking in shall not be permitted. If it is necessary for fire fighters to be positioned on the aerial, they shall be secured by a life belt.

(h) Ladder pipes, when in use, shall be secured to the aerial in such a manner so that the ladder pipe cannot accidentally be dislodged while in operation.

(i) The operator of an aerial ladder shall remain on the turntable whenever fire fighters are working on the aerial. If the ladder is used only as a ground ladder, no operator is needed on the turntable.

(3) The following shall regulate the design and use of the operating turntable and ladder:

(a) Ladders shall be designed to have nonskid protection on the rungs.

(b) Turntable controls and valves for rotating, extending, or elevating the aerial ladder shall be clearly and distinctly marked as to function.

(c) Aerial controls shall be spring loaded and have a safety catch so that the controls shall return to the neutral position if the operator is incapacitated.

(d) The operator of the aerial shall be provided with a nonskid surface on the turntable surface.

(e) A railing of approximately 44 inches in height, and if possible, not less than 36 inches in length, shall be installed on the turntable in back of the operators position.

(f) A light of not less than 10,000 candlepower shall be provided at the base to illuminate the ladder at night in any position of operation.

(4) The following shall regulate the communication systems on the aerial ladder and on the automotive fire apparatus.

(a) A two-way voice communication system shall be installed between the top fly of the ladder and the lower control station.

(b) There shall be some type of electrical signal or voice communication located in the tractor of tillered aerial for communication signals between the tillerman and driver. The apparatus shall not be moved unless the proper signal, as shown in Appendix E, is received from the tillerman.

(5) When maintaining the aerial ladder, the manufacturer's instructions shall be followed.

(a) Cables, pulleys, rails and rungs of aerial ladders shall be inspected for wear and tightness on a monthly basis or every ten hours of operating time, which ever comes first.

(b) Pulleys on the aerial with cracks or pieces broken out of rims shall be replaced.

(c) Cables showing evidence of damage or wear shall be replaced.

(d) Rungs or rails that have been subjected to unusual impact shall be tested before usage.

(6) The automotive fire apparatus used in conjunction with aerial ladders shall be designed and used according to the following:

(a) Ground jacks or outriggers shall be deployed before an aerial ladder is put into operation.

(b) Ground plates shall be deployed under the outriggers or jacks at all times.

(c) Hand, airbrakes, and spring brakes for fifth wheel shall be set whenever an aerial ladder is in operation.

(d) In addition to ground jack supports and outriggers, wheel blocks shall be used whenever the aerial is in operation.

(e) Wheel chocks shall be rated by the manufacturer of the chock for the apparatus it is to be used on.

(f) Sand shall be put under jacks and outriggers when operating on ice or snow.

(7) Annual testing of metal aerial ladders shall follow the recommendations of the current National Fire Protection Association Standard.

(a) The aerial ladder, as well as the support section of the apparatus which supports the turntable, shall be nondestructively tested by a certified testing agency every five years.

(b) After any accident that causes structural damage, the test in (a) shall be performed and all defects detected shall be corrected before the apparatus is returned to service.

[Statutory Authority: RCW 49.17.010, [49.17].050 and [49.17].060. 96-11-067, § 296-305-04509, filed 5/10/96, effective 1/1/97.]

WAC 296-305-04511 Elevated platforms. (1) Elevated platform system design requirements:

(a) The platform shall have a minimum floor area of fourteen square feet.

(b) The platform shall be provided with a guard railing. The guard railing shall be 42 to 45 inches high on all sides.

(c) The railing shall be constructed so that there is no opening below it greater than 19 inches.

(d) There shall be two gates below the top railing, each of which shall be provided with suitable safety latches.

(e) A kick plate not less than four inches high shall be provided around the floor of the platform.

(f) Drain openings shall be provided to prevent water accumulation on the platform.

(g) A heat-protective shield shall be provided on the platform for the protection of the operator.

(h) Hydraulic or pneumatic systems shall have a minimum bursting strength of at least four times the operating pressure for which the system is designed.

(i) The basic structural elements of the hydraulic or articulating boom shall have a safety factor of three.

(j) Each hydraulic or pneumatic system for the boom shall be equipped with a pilot operated check valve or other appropriate device to prevent free fall in the event of hydraulic failure.

(2) Requirements related to the controlling of elevated platforms:

(a) A control or device shall be provided at both the lower control station and the platform control station to allow either operator to completely deactivate the platform controls.

(b) During the deactivation of the platform controls, the lower controls shall remain operable.

(c) A plate shall be located at the platform control unit or units listing the following information:

(i) Model and serial number of the manufacturer;

(ii) Rated capacity of the platform;

(iii) Operating pressure of the hydraulic or pneumatic systems or both;

(iv) Caution or restriction of operation or both; and

(v) Control instructions.

(vi) This plate shall be clearly visible to the operator at the lower control position.

(d) There shall be an operator at the lower controls at all times while the fire fighter is in the bucket.

(e) The operator at the lower controls shall make certain the fire fighter on the platform is secured by his life belt, or equivalent, before raising the platform.

(3) Testing of elevated platforms and related apparatus shall be conducted annually.

(a) Testing of elevated platforms and related apparatus shall be in accordance with NFPA, Standard for Testing Fire Department Aerial Ladders 1914, 1991 edition.

(b) It is recommended that the boom section as well as the support section of the apparatus which supports the turntable should be nondestructively tested by a certified testing agency every five years.

(c) After any accident that causes structural damage, testing shall be performed and all defects detected shall be corrected before the apparatus is returned to service.

(d) Elevated platform testing shall follow recommendations of the current National Fire Code.

(e) Fire apparatus elevated platforms shall be positioned for the greatest stability feasible at the fire scene.

(4) A two-way voice communication system shall be installed between the platform and the lower control station.

(5) Automotive apparatus used in conjunction with elevated platforms shall be used in accordance with the following:

(a) Hand or air brakes shall be set before the platform is operated.

(b) Jacks or outriggers shall be used if the platform is to be elevated.

(c) Wheel blocks shall also be used when the platform is in operation unless the type of apparatus is one that has wheels that lift off the ground when the jacks or outriggers are engaged.

(d) Ground plates shall be used under the outriggers or jacks.

(e) Sand shall be put under jacks and outriggers when operating on ice or snow.

(f) When working on or near energized electrical lines, the fire department shall develop operational procedures for observing the following minimum working clearances:

(i) For lines rated 50 kv or below, the minimum clearance shall be ten feet.

(ii) For lines rated over 50 kv, the minimum clearance shall be ten feet plus 0.4 inch for each 1 kv.

(iii) For low voltage lines (operating at 750 volts or less), the work shall be performed in a manner to prevent the fire fighters contacting the energized conductor.

(6) Appliances mounted on elevated platforms. Platform mounted monitors shall be operated in accordance with the manufacturer's instructions.

Additional References: WAC 296-24-880.

[Statutory Authority: RCW 49.17.010, [49.17].040, and [49.17].050. 01-11-038, § 296-305-04511, filed 5/9/01, effective 9/1/01. Statutory Authority: RCW 49.17.010, [49.17].050 and [49.17].060. 96-11-067, § 296-305-04511, filed 5/10/96, effective 1/1/97.]

WAC 296-305-05001 Emergency fireground operations—Structural. (1) The fire department shall establish an incident command system (ICS) with written guidelines applying to all members involved in emergency operations. All members involved in emergency operations shall be familiar with the ICS system. Personnel shall be trained and qualified by their department in the incident command system prior to taking a supervisory role at an emergency scene.

(2) At an emergency incident, the incident commander shall be responsible for the overall safety of all members and all activities occurring at the scene.

(3) All emergency incidents shall be managed by an ICS; the incident commander shall establish an organization with sufficient supervisory personnel to control the position and function of all members operating at the scene and to ensure that safety requirements are satisfied.

(4) At an emergency incident, the incident commander shall have the responsibility to:

(a) Assume and confirm command and take an effective command position.

(b) Perform situation evaluation that includes risk assessment.

(c) Initiate, maintain, and control incident communication.

(d) Develop an overall strategy and attack plan and assign units to operations.

(e) Develop an effective incident organization by managing resources, maintaining an effective span of control, and maintaining direct supervision over the entire incident by creating geographical and/or functional areas as appropriate for the scope and size of the incident.

(f) Review, evaluate, and revise the operational plan as required.

(g) Continue, transfer, and terminate command.

(5) The fire department shall develop a risk management policy that can be implemented into the function of incident command and the development of incident strategies.

The risk management policy should include direction and guidance to the incident commander in formulating incident planning relating to the level of risk that may be undertaken in any given incident to save lives and to save property in as safe a manner as dictated by the situation.

(6) The fire department shall establish written procedures and guidelines for tracking all members operating at an emergency incident.

(7) The incident command system shall provide for control of access to hazardous areas of the incident scene by department members.

(8) Fire fighters operating in hazardous areas at emergency structural fire incidents shall operate in teams of two or more.

Team members operating in hazardous areas shall be in communication with each other through visual, audible, physical, safety guide rope, or electronic means, or by other means in order to coordinate their activities. Team members shall be in close proximity to each other to provide assistance in case of emergency.

(9) The fire department shall provide personnel for the rescue of members operating at emergency incidents as the need arises.

(10) Before beginning interior structural fire fighting operations, the incident commander must evaluate the situation and risks to operating teams.

(a) Except as provided in WAC 296-305-05001(11), fire fighters must not engage in interior structural fire fighting in the absence of at least two standby fire fighters.

(b) All standby fire fighters must be fully equipped with the appropriate protective clothing, protective equipment and SCBA.

(c) Standby members must remain aware of the status of fire fighters in the hazardous area.

(d) Standby members must remain in positive communication with the entry team(s), in full protective clothing the SCBA donned in the standby mode.

(e) Standby members may be permitted to perform other duties outside the hazardous area, provided constant communication is maintained between a standby member and the entry team(s), and provided that those duties will not interfere with the standby members' ability to participate in a rescue as appropriate.

(f) Early consideration should be given to providing one or more rapid intervention teams commensurate with the needs of the situation.

(11) In the "initial stage" of a structure fire-incident where only one team is operating in the hazardous area, where additional resources can reasonably be expected, and where exceptional circumstances indicate that immediate action may be necessary to prevent or mitigate the loss of life or serious injury to citizenry or fire fighters, at least one additional fire fighter must be assigned to stand by outside the hazardous area where the team is operating.

(a) The standby fire fighter must remain aware of the status of fire fighters in the hazardous area.

(b) The standby fire fighter must remain in positive communication with the entry team, in full protective clothing with SCBA donned in the standby mode.

(c) The standby fire fighter may be permitted to perform other duties outside the hazardous area, provided constant communications is maintained with the team in the hazardous area, and provided that those duties will not interfere with his or her ability to initiate a rescue as appropriate.

(d) Once additional resources have arrived on the scene, the incident must no longer be considered in its initial stage and all the requirements of WAC 296-305-05001(10) must be met.

Note: Nothing in this section shall prevent activities which may reasonably be taken by members first on the scene to determine the nature and extent of fire involvement.

(12) The fire department shall develop and maintain written guidelines for the safety of members at incidents that involve violence, unrest, or civil disturbance. Such situations may include but not be limited to riots, fights, violent crimes, drug related situations, family disturbances, deranged individuals, and people interfering with fire department operations.

(13) Officers at emergency scenes shall maintain an awareness of the physical condition of members operating within their span of control and ensure that adequate steps are taken to provide for their safety and health. The command structure shall be utilized to request relief and reassignment of fatigued crews.

(14) Wildfire suppression personal protective clothing/equipment shall not be utilized for interior attacks on structures.

(15) Teams in the hazardous area shall have positive communication capabilities with the incident command structure. Incident radio communication capabilities within the incident command structure shall include monitoring of incident-assigned frequencies (including mutual aid radio frequencies).

(16) Prior to overhaul, buildings shall be surveyed for possible safety and health hazards. Fire fighters shall be informed of hazards observed during the survey.

(17) During the overhaul phase officers shall identify materials likely to contain asbestos, limiting the breaching of structural materials to that which is necessary to prevent rekindle.

(18) Floatation devices shall be made available to fire fighters at incidents where drowning is a possibility. This is not intended to include pools and hot tubs.

(19) Fire fighters shall not cut the electrical drip loop providing power to the structure nor pull the electrical meter.

(20) Traffic cones or other traffic control devices shall be utilized when vehicular traffic hazards exist at an emergency operation.

[Statutory Authority: RCW 49.17.040. 99-05-080, § 296-305-05001, filed 2/17/99, effective 6/1/99. Statutory Authority: RCW 49.17.010, [49.17].050 and [49.17].060. 96-11-067, § 296-305-05001, filed 5/10/96, effective 1/1/97.]

WAC 296-305-05003 Confined space rescue operations. (1) Fire departments shall comply with chapter 296-62 WAC, Part M for their own confined spaces.

(2) Fire departments which have been contracted as an outside rescue service provider shall also comply with Part M and in particular the specific provisions of WAC 296-62-14150(2) which requires authorized entrant training and rescue practices from the host's actual permit spaces or representative permit spaces.

(3) Fire departments which have responded or will respond to calls to perform rescue from a noncontracted permit-required confined space are required to have each member of a rescue team practice making permit space rescues at least every 12 months by means of simulated rescue operations in which they remove dummies, mannequins or actual persons from permit space. A permit is required for the practice permit space entry.

(4) During an actual rescue response, written and/or verbally recorded hazard sizeup will be allowed in lieu of the written permit requirements in WAC 296-62-14507 and 296-62-14509 and shall be completed prior to any entry. This sizeup shall include at a minimum:

(a) Recognition and declaration of the situation as a confined space incident.

(b) Denial of entry to unprotected persons.

(c) Assessment of all readily available confined space documentation, e.g., MSDSs, any existing permit, plans or blueprints of the space.

(d) Assessment of number of victim(s), locations and injury conditions.

(e) Discussion with witnesses, supervisor, etc.

(f) Assessment of any current or potential space hazards, in particular, any hazard(s) which lead to the necessary rescue.

(g) Determination and declaration if body recovery or victim rescue.

(5) At confined space incidents, at least two people outside shall be equipped with appropriate breathing apparatus to act as the back-up team, which shall remain free of the contaminated area in order to rescue disabled fire fighters.

(6) Written documentation of the rescue team's training on the fire department's confined space operating procedures, authorized entrant training, if applicable, the contracted host's confined space program. A record of each of the hazard sizeups shall be maintained for at least one year.

[Statutory Authority: RCW 49.17.010, [49.17].040, [49.17].050. 02-12-098, § 296-305-05003, filed 6/5/02, effective 8/1/02. Statutory Authority: RCW 49.17.010, [49.17].050 and [49.17].060. 96-11-067, § 296-305-05003, filed 5/10/96, effective 1/1/97.]

WAC 296-305-05005 Rope rescue operations. (1) Fire departments engaged in rope rescue operations shall comply with the requirements of this section and WAC 296-305-02019.

(2) Employees engaged in rope rescue operations shall be properly trained and qualified by the employer to perform such activities.

(3) Employers shall establish standard operational procedures for rope rescue activities and training.

(4) When engaged in rope activities, employees shall be provided and wear either structural fire fighting helmets and gloves, or helmets that meet ANSI Standard Z89.1, 1986 edition, Class A and B; gloves.

(5) Records shall be maintained of inspections and repairs made to rope rescue equipment.

(a) Equipment shall be inspected after purchase and prior to placing in service, after each use, and at least semi-annually.

(b) Harnesses shall be inspected for worn or broken stitching, rivets worn out of holes, and damage from abrasion, cuts, or chemicals.

(c) Descending/ascending hardware shall be inspected for wear, cracks, distortion, sharp edges, and ease of operation.

(d) Equipment showing damage or wear that can affect employee safety, shall be either repaired prior to further use or retired.

(6) The manufacturer's recommended shelf life of rescue ropes shall be followed. If no shelf life is specified, ropes greater than six years old, whether used or not, shall be taken out of service or destroyed.

[Statutory Authority: RCW 49.17.010, [49.17].050 and [49.17].060. 96-11-067, § 296-305-05005, filed 5/10/96, effective 1/1/97.]

WAC 296-305-05007 Trench rescue operations. (1) Fire departments that engage in trench rescue operations shall adopt and maintain a written response program that addresses training and procedures to follow in emergency life threatening situations.

(2) Employees that directly engage in trench rescue operations shall be trained or shall be under the direct supervision of person(s) with adequate training in trench and excavation

hazard recognition, equipment use and operational techniques.

[Statutory Authority: RCW 49.17.040. 99-05-080, § 296-305-05007, filed 2/17/99, effective 6/1/99. Statutory Authority: RCW 49.17.010, [49.17].050 and [49.17].060. 96-11-067, § 296-305-05007, filed 5/10/96, effective 1/1/97.]

WAC 296-305-05009 Watercraft rescue operations. (1) If a manufacturer's specifications are such that an engineer is required for the operation of a vessel, then one shall be provided.

(2) When fire boats perform rescue activities they shall have two dedicated personnel. Any member not specifically required to operate the vessel, e.g., an operator (pilot) or engineer (if required by the manufacturers specification) may be used as a deck hand. This may include the boat officer if his/her duties do not include operating the fire boat.

(3) Watercraft load capabilities shall not exceed the manufacturer's specifications.

(4) Each fire department shall determine the function of their watercraft; as fire fighting, rescue, or both.

(5) Watercraft operating within navigable waters of the state of Washington (as defined by the United States Coast Guard) shall comply with all of the rules of the United States Coast Guard.

(6) Fire boats operating within navigable waters of the state of Washington (as defined by the United States Coast Guard) shall have a fully dedicated pilot.

(7) The operator (pilot) of the watercraft is responsible for its safe operation.

(8) Training for all personnel shall represent the intent of the employer and physical characteristics of the vessel involved and shall be included in the employer's accident prevention program.

(a) All assigned personnel shall be trained in safe operation of watercraft and the operations the craft is intended to perform.

(b) All employees involved in water rescue shall be trained in water rescue techniques and wear Coast Guard approved personal flotation devices, Type III, minimum.

Exception: Employees working below deck or in enclosed cabins.

(9) All employers operating watercraft in nonnavigable waters shall be responsible for training all employees to local hazards.

[Statutory Authority: RCW 49.17.040. 99-05-080, § 296-305-05009, filed 2/17/99, effective 6/1/99. Statutory Authority: RCW 49.17.010, [49.17].050 and [49.17].060. 96-11-067, § 296-305-05009, filed 5/10/96, effective 1/1/97.]

WAC 296-305-05011 Hazardous materials operations. Fire departments engaged in emergency response to releases of hazardous substances shall comply with chapter 296-824 WAC, Emergency response to hazardous substance releases.

[Statutory Authority: RCW 49.17.010, [49.17].040, [49.17].050, and [49.17].060. 02-20-034, § 296-305-05011, filed 9/24/02, effective 10/1/02. Statutory Authority: RCW 49.17.010, [49.17].050 and [49.17].060. 96-11-067, § 296-305-05011, filed 5/10/96, effective 1/1/97.]

WAC 296-305-05013 Aircraft rescue and fire fighting. Fire departments that engage in aircraft rescue and fire fighting operations shall review NFPA, Manual for Aircraft Rescue and Fire Fighting Operations 402M, 1991 edition.

[Statutory Authority: RCW 49.17.010, [49.17].050 and [49.17].060. 96-11-067, § 296-305-05013, filed 5/10/96, effective 1/1/97.]

WAC 296-305-05501 Fire training. (1) All members who engage in emergency operations shall be trained commensurate with their duties and responsibilities. Training shall be as frequent as necessary to ensure that members can perform their assigned duties in a safe and competent manner but shall not be less than the frequencies specified in this standard. Minimum training shall be as specified in this part.

(2) Live structural-fire training: Prior to being permitted to participate in live structure-fire training evolutions, the student shall have received adequate training in safety, protective breathing apparatus, fire hose, nozzles and fire streams, ladders, and rescue as defined by the employer.

(a) Strict safety practices shall be applied to all structures selected for live fire training evolutions.

(b) In preparation for live training, an inspection of acquired buildings shall be made to determine that the floors, walls, stairs and other structure components are capable of withstanding the weight of contents, participants and accumulated water.

(c) Removal or neutralization of materials of all hazardous storage and conditions within the structure shall be accomplished.

(i) Closed containers and highly combustible materials shall be removed.

(ii) Oil tanks and similar closed vessels that cannot easily be removed shall be vented sufficiently to eliminate an explosion or overpressure rupture.

(iii) Any hazardous or combustible atmosphere within the tank or other vessel shall be rendered inert.

(iv) Hazards potentially dangerous to participants such as floor openings, missing stair tread and rails, and other such hazards shall be repaired or made inaccessible.

(d) If applicable, floors, railings and stairs shall be made safe. Special attention shall be given to potential chimney hazards.

(e) Debris hindering the access or egress of fire fighters shall be removed before continuing further operations.

(f) Buildings that cannot be made safe as required by this section shall not be utilized for interior live fire training.

Note: The water supply for any individual live fire training evolution should be assessed based on the extent of the evolution, size and structure of the building and contents to be involved, method of attack to be employed, protection of exposures and reserves for potential contingencies. Separate sources should be used for supply to attack and backup lines.

(g) Prior to conducting actual live fire training evolutions, a preburn briefing shall be conducted for all participants.

(i) All evolutions shall be discussed and assignments shall be made for all crews participating in the training sessions.

(ii) All participants shall have a knowledge and familiarity with the layout of the building.

(h) A safety officer shall be appointed for all live fire training evolutions.

(i) One person shall be designated to control the materials being burned and to ignite the training fire in the presence and under the direction of the safety officer. This person shall not be a student and shall wear full protective clothing, including SCBA.

(j) Unidentified materials such as debris which may burn in unanticipated ways, react violently, or create environmental hazards, shall not be used in live fire training evolutions.

(k) Each participant in a coordinated interior live fire training evolution shall be equipped with full protective clothing and SCBA. All participants shall be inspected by the safety officer to insure all protective clothing and SCBA are being properly worn prior to entry into a live fire training evolution.

(l) All instructors shall be deemed qualified to deliver structural fire fighting training by the employer. The instructor-student ratio shall not be greater than one to five.

(m) Officers shall make a head count both when entering and exiting a building during an actual attack.

(n) Supervisors at the training evolution shall maintain an awareness of the condition of members operating within the span of their control. They shall ensure adequate steps are taken to provide for the safety and health of the participants and relief or reassignment of fatigued persons.

(3) Fire fighters shall be trained in the function, donning and doffing, care, use, inspection, maintenance and limitations of the equipment assigned to them or available for their use.

(4) When fire fighters are engaged in training above the ten-foot level where use of life lines or similar activities are to be undertaken, a safety net shall be erected or other approved secondary means of fall protection such as recommended in chapter 296-155 WAC, Part C-1, Fall restraint and fall arrest, shall be used in lieu of nets.

(5) During wet training exercises, hose meeting the 250 pound annual hose test shall be used.

(6) Training shall be provided to fire fighters and officers in order that they will be knowledgeable in the identification and handling of asbestos containing materials likely to be encountered during a fire response.

[Statutory Authority: RCW 49.17.010, [49.17].050 and [49.17].060. 96-11-067, § 296-305-05501, filed 5/10/96, effective 1/1/97.]

WAC 296-305-05503 Summary of training requirements. (1) Training on noise must conform to chapter 296-817 WAC, Hearing loss prevention (noise), and WAC 296-305-02005.

(2) Training on medical procedures shall conform to WAC 296-305-02501.

(3) Training on respiratory equipment shall conform to chapter 296-62 WAC, Part E, Respiratory protection, and WAC 296-305-04001.

(4) Training on employee right-to-know procedures shall conform to WAC 296-800-170, chemical hazard communication program.

(5) Training on overhaul procedures and operations shall conform to WAC 296-305-05001.

(6) Training on wildland fires shall conform to WAC 296-305-07001 through 296-305-07019.

(7) Training on confined space entry and/or rescue shall conform to chapter 296-62 WAC, Part M, Permit-required confined spaces and WAC 296-305-05003.

(8) Live fire training in structures shall conform to NFPA 1403 and this section.

(9) The employer shall provide training and education for all members commensurate with those duties and functions that members are expected to perform. Such training and education shall be provided to members before they perform emergency activities. Fire service leaders and training instructors shall be provided with training and education which is more comprehensive than that provided to the general membership of the fire department.

(10) The employer shall assure that training and education is conducted frequently enough to assure that each member is able to perform the member's assigned duties and functions satisfactorily and in a safe manner so as not to endanger members or other employees. All members shall be provided with training at least annually. In addition, members who are expected to perform interior structural fire fighting shall be provided with an education session or training at least quarterly.

[Statutory Authority: RCW 49.17.010, 49.17.040, 49.17.050, and 49.17.060. 03-11-060, § 296-305-05503, filed 5/19/03, effective 8/1/03. Statutory Authority: RCW 49.17.010, [49.17].040, and [49.17].050. 01-11-038, § 296-305-05503, filed 5/9/01, effective 9/1/01. Statutory Authority: RCW 49.17.010, [49.17].050 and [49.17].060. 96-11-067, § 296-305-05503, filed 5/10/96, effective 1/1/97.]

WAC 296-305-06001 Fire service equipment. (1) All portable equipment shall be inspected routinely to ensure that it is ready for use.

(2) Any defective equipment shall be removed from service.

(3) Nylon utility straps or straps of equivalent strength should be used instead of hose belts. The utility strap shall be of one-inch nylon, or equivalent belting, with a four-inch overlap and sewn with polyester thread and shall measure at least 102 inches on the outside circumference.

(4) The load capacity shall be stenciled on each portable jack and the load capacity shall not be exceeded.

(5) The instruction plate on portable jacks shall be maintained in a legible condition.

(6) Portable powered cut-off saws (rescue saws) shall be used in accordance with the manufacturer's recommendations.

Exception: The lower blade guard described in WAC 296-24-65501 (1)(a) is not required on hand-held portable powered cut-off saws used by fire/rescue personnel for rescue procedures and/or roof ventilation for smoke removal, provided the operator is wearing appropriate eye, face, head, and body protection as specified in WAC 296-305-02001 through 296-305-02013. This exception also applies to qualified persons (e.g., instructors) wearing personal protective equipment as described herein to instruct personnel in safe roof ventilation/rescue techniques.

(7) When not in use, the cutting teeth on a chain saw shall be covered either by an old section of hose, a wooden scabbard, or an equivalent method.

(8) All axes worn by employees shall be provided with a scabbard to guard against injury from the blade and pick of the axe.

(9) The guards on smoke ejectors, as supplied by the manufacturer, shall not be removed and the operator of the ejector shall wear gloves.

(10) Acetylene cylinders. Handling, storage and utilization of acetylene in cylinders shall be in accordance with the Compressed Gas Association Pamphlet G-1 - 1966 edition.

(11) Powder activated life-line guns and accessories shall be stored in a box or container equipped with a lid or cover.

(a) The box shall be kept closed when not in use.

(b) A loaded life-line gun shall not be placed in the storage box.

(c) Instruction books, cleaning kits and hand tools needed for maintenance or breakdown purposes shall be kept in the life-line gun storage box.

(d) The words "powder activated tool" shall be conspicuously printed on the top of the storage box.

(12) Abrasive blades in storage shall be protected from contact with water, liquids, petroleum products and their fumes.

(13) Fiber rope that has been subjected to injurious chemicals or excessive heat shall not be used for load carrying purposes.

[Statutory Authority: RCW 49.17.010, [49.17].050 and [49.17].060. 96-11-067, § 296-305-06001, filed 5/10/96, effective 1/1/97. Statutory Authority: RCW 49.17.040 and 49.17.050. 83-24-013 (Order 83-34), § 296-305-06001, filed 11/30/83; Order 77-20, § 296-305-06001, filed 10/18/77 and Emergency Order 77-24, filed 11/17/77, effective 12/17/77.]

WAC 296-305-06003 Testing fire service equipment. (1) When testing fire hose, a restricted orifice disc having not more than a 25% opening, shall be installed on the pumper discharge port. Or in the alternative, the pumper discharge valve may be opened not more than 25% to insure a minimum volume of water in case of a bursting hose.

(2) Safety nets shall be tested annually by dropping a weight of not less than 400 pounds from the highest point to be used above the net. The test weight object may consist of two tightly tied rolls of two and one-half inch hose, each 100 feet long, or any other object having similar weight and dimension.

(a) The net suspension system shall be designed and constructed with a safety factor of four and as a minimum, shall withstand the test loading without permitting contact between the net and any surface or object below the net.

(b) Forged steel safety hooks or shackles shall be used to fasten the net to its supports.

(c) Training requiring safety net protection shall not be undertaken until the net is in place and has been tested by the weight of three fire fighters on the net.

(d) Safety nets shall extend eight feet beyond the edge of the work surface.

(e) The mesh size of nets shall not exceed six inches by six inches.

(f) All nets shall meet accepted performance standards of 17,500 foot pounds minimum impact resistance as determined and certified by the manufacturer, and shall bear a label of proof test.

(g) Edge ropes shall provide a minimum breaking strength of 5,000 pounds.

(3) Life belts shall meet or exceed the strength requirements of ANSI. A10.14 - Requirements for Safety Belts, Harnesses, Lanyards, Lifelines and Drop Lines for Industrial Use. Life belts shall be inspected after each use and not less than semi-annually in accordance with manufacturer's instructions.

(4) Rescue ropes shall be used for rescue purposes only.

(5) Rescue ropes shall meet the following requirements:

(a) Rescue ropes shall be constructed of rot-proof fiber with a melting point of not less than 400 degrees F;

(b) They shall be of abrasion resistant construction;

(c) They shall have a minimum breaking strength of not less than 9,000 pounds.

(6) Rescue ropes shall be inspected after each use and not less than semi-annually in accordance with manufacturer's instructions.

(7) The method of testing a life line gun shall be in accordance with the manufacturer's recommended procedure.

[Statutory Authority: RCW 49.17.010, [49.17].050 and [49.17].060. 96-11-067, § 296-305-06003, filed 5/10/96, effective 1/1/97. Statutory Authority: Chapter 49.17 RCW. 88-14-108 (Order 88-11), § 296-305-06003, filed 7/6/88. Statutory Authority: RCW 49.17.040 and 49.17.050. 83-24-013 (Order 83-34), § 296-305-06003, filed 11/30/83; Order 77-20, § 296-305-06003, filed 10/18/77 and Emergency Order 77-24, filed 11/17/77, effective 12/17/77.]

WAC 296-305-06005 Ground ladders. This section establishes the minimum requirements for the construction, care and use of the common types of ladders used in fire combat.

(1) Ladder locks or pawls on extension ladders shall be so fastened or secured to the beams that vibration and use will not cause loosening of bolts and nuts.

(a) Pawls or ladder locks shall be so constructed that the hook portion of the pawl that engages the rung shall have sufficient bearing surface or area to prevent the hook from cutting into rungs when engaged.

(b) Such hooks shall be properly finished to eliminate sharp edges and points.

(2) Staypoles or tormenters shall be furnished on all extension ladders extending over forty feet. Staypole or tormenters spikes shall not project beyond the butt of the ladder when nested.

(3) All ladders shall be stored in a manner to provide ease of access for inspection, and to prevent danger of accident when withdrawing them for use.

(4) Fire fighters shall climb and descend ground ladders with the fly in, for safety purposes, when not in conflict with the manufacturer's recommendations. Even when ladders are routinely used in the fly out configuration, in adverse conditions fire fighters shall be permitted to climb and descend ground ladders with the fly in to assure secure footing.

(5) All ladders regardless of type shall be inspected thoroughly after each use. Records shall be kept of the inspections and repairs.

(6) The following metal ladder components shall be checked:

(a) Rungs for welds, damage or weakness caused by overloading or bumping against other objects, looseness and cracks, etc.

(b) Beams for welds, rivets and bolts, signs of strain or metal fatigue, and deformation from heat or overloading.

(c) Bolts and rivets for tightness.

(d) Butt spurs for excessive wear or other defects.

(e) Halyards for the same defects listed for wood ladder halyards and cable halyards, for fraying or breaking.

(f) Heat sensor label, when provided, for change indicating heat exposure.

(7) The following wood ladder components shall be checked:

(a) Bolts for snugness and tightness without crushing the wood.

(b) Beams for dark streaks; when a wood ground ladder develops dark streaks in the beams, the ladder shall be removed from service and service tested as specified in this chapter, prior to further use.

(c) Protective varnish finish for damage or wear, at least once a month and redone annually or at such frequency as specified by the manufacturer. If the protective finish becomes charred or blistered, the ladder shall be removed from service and service tested as specified in this chapter, prior to further use.

(8) Methods of fastening ladder halyards, either of wire or fibrous material, shall be in a manner that the connection is stronger than the halyard.

(9) Any defect noted in above visual inspection shall be corrected prior to testing.

(10) Every portable ladder shall be tested following the correction of defects disclosed by the visual inspections.

(11) New ground ladders purchased after the effective date of this chapter shall be constructed and certified in accordance with the requirements of NFPA Standard 1931, 1994 edition.

(12) All fireground ladders shall be inspected and maintained in accordance with the requirements of the 1994 edition of NFPA 1932. When metal ground ladders are tested, they shall be tested in accordance with the strength service testing procedures of the 1984 edition of NFPA 1932.

(a) Extension ladders that were constructed prior to the adoption of the 1984 edition of NFPA 1931, may, when tested in accordance with this chapter, be tested with a minimum test load of 400 pounds and a preload of 300 pounds. Ladders tested under this exception shall be used with a maximum load limit of 500 pound distributed or 400 pound concentrated. Ladders shall be tested in the configuration they are used.

(b) Additional requirements for wooden ground ladders; whenever any wood ground ladder has been exposed or is suspected of having been exposed to direct flame contact the ladder shall be service tested as specified in section 5-2 of NFPA Standard 1932, 1984 edition.

Note 1: Hardness testing and eddy current NDE testing is not required in the fire department annual maintenance inspection unless the individual ladder has been subjected to a high heat exposure which could have annealed the metal and diminished the structural integrity. The ladder manufacturer's recommendations should be followed with respect to hardness and eddy current testing.

Note 2: Testing should follow the recommended procedures taught by Washington State Fire Protection Bureau.

Additional references: Chapter 296-24 WAC, Part J-1 and WAC 296-800-290.

[Statutory Authority: RCW 49.17.010, [49.17].040, and [49.17].050. 01-11-038, § 296-305-06005, filed 5/9/01, effective 9/1/01. Statutory Authority: RCW 49.17.040. 99-05-080, § 296-305-06005, filed 2/17/99, effective 6/1/99. Statutory Authority: RCW 49.17.010, [49.17].050 and [49.17].060. 96-11-067, § 296-305-06005, filed 5/10/96, effective 1/1/97. Statutory Authority: Chapter 49.17 RCW. 88-14-108 (Order 88-11), § 296-305-06005, filed 7/6/88. Statutory Authority: RCW 49.17.040 and 49.17.050. 83-24-013 (Order 83-34), § 296-305-06005, filed 11/30/83; Order 77-20, § 296-305-06005, filed 10/18/77 and Emergency Order 77-24, filed 11/17/77, effective 12/17/77.]

WAC 296-305-06007 Electrical. (1) Temporary lighting with the use of 110 - 120 VAC equipment.

(a) All lighting equipment shall be provided with heavy duty flexible cords with SO or SJ jackets or equivalent. All lighting equipment shall be used with heavy duty flexible extension cords with 12-3 conductors with SO or SJ jackets or equivalent.

(b) Electrical cords shall have weather tight bodies and caps, 20 amp rated at 120 VAC with appropriately sized plugs and sockets.

(c) Temporary lights that are used in moist, damp, and/or other hazardous locations shall be approved for the purpose.

(d) Temporary lights shall be constructed so that water cannot enter or accumulate in wireways, lampholders or other electrical parts.

(e) Temporary lights that are used in moist and/or other hazardous locations shall have 120 VAC single-phase 15 and/or 20 amp in-line resettable ground fault circuit interrupters.

(f) Temporary lights shall be equipped with a handle and be insulated from heat and possible electrical shock.

(g) Temporary lights shall not be suspended by their electrical cords unless cords and lights are designed and labeled for this means of suspension.

(h) Temporary lights shall be protected by guards of a nonconductive or insulated material to prevent accidental contact with the bulb.

(2) 120 VAC cord reels shall be approved for use in damp or hazardous locations.

(a) Bodies and caps shall be weather tight, 20 amp rated at 120 VAC.

(b) Cords on cord reels that do not exceed 150 feet in length shall be SO or SJ type jackets or equivalent.

(c) Cords that exceed 150 feet in length on reels, shall have 10-3 conductors.

(d) Cord reels that are not permanently mounted on a vehicle shall be insulated from the ground when in use.

(3) Twelve volt portable type hand lanterns shall be constructed of molded composition or other type approved for the purpose.

(a) Portable hand lanterns used in moist and/or other hazardous locations shall be operated at a maximum of 12 volts.

(b) Hand lamps shall be equipped with a handle and a substantial guard over the bulb and attached to the lampholder.

(4) Portable and vehicle-mounted generators.

(a) Portable generators. Under the following conditions, the frame of a portable generator shall not be required to be grounded and shall be permitted to serve as the grounding electrode for a system supplied by the generator:

(i) The generator supplies only equipment mounted on the generator or cord-connected and plug-connected equipment through receptacles mounted on the generator, or both, and

(ii) The noncurrent-carrying metal part of equipment and the equipment grounding conductor terminals of the receptacles are bonded to the generator frame.

(b) Vehicle-mounted generators. Under the following conditions, the frame of a vehicle may serve as the grounding electrode for a system supplied by a generator located on the vehicle:

(i) The frame of the generator is bonded to the vehicle frame; and

(ii) The generator supplies only equipment located on the vehicle and/or cord-connected and plug-connected equipment through receptacles mounted on the vehicle or on the generator; and

(iii) The noncurrent-carrying metal parts of equipment and the equipment grounding conductor terminals of the receptacles are bonded to the generator frame.

Additional references: Article 250 National Electrical Code. Chapter 296-24 WAC, Part L and WAC 296-800-280.

[Statutory Authority: RCW 49.17.010, [49.17].040, and [49.17].050. 01-11-038, § 296-305-06007, filed 5/9/01, effective 9/1/01. Statutory Authority: RCW 49.17.040. 99-05-080, § 296-305-06007, filed 2/17/99, effective 6/1/99. Statutory Authority: RCW 49.17.010, [49.17].050 and [49.17].060. 96-11-067, § 296-305-06007, filed 5/10/96, effective 1/1/97. Statutory Authority: RCW 49.17.040 and 49.17.050. 83-24-013 (Order 83-34), § 296-305-06007, filed 11/30/83; Order 77-20, § 296-305-06007, filed 10/18/77 and Emergency Order 77-24, filed 11/17/77, effective 12/17/77.]

WAC 296-305-06501 Requirements for fire station facilities. WAC 296-305-06501 through 296-305-06519 pertain to all fire department facilities as defined in WAC 296-305-01005.

[Statutory Authority: RCW 49.17.010, [49.17].050 and [49.17].060. 96-11-067, § 296-305-06501, filed 5/10/96, effective 1/1/97. Statutory Authority: RCW 49.17.040 and 49.17.050. 83-24-013 (Order 83-34), § 296-305-06501, filed 11/30/83; Order 77-20, § 296-305-06501, filed 10/18/77 and Emergency Order 77-24, filed 11/17/77, effective 12/17/77.]

WAC 296-305-06503 General requirements. (1) Stations and administrative offices shall comply with the requirements of the general occupational health standards, WAC 296-800-210, Lighting in the workplace.

(2) Every new fire station built after the effective date of this chapter, whether manned or unmanned, shall be equipped with an approved emergency lighting system that will light dormitories, hallways, and apparatus bay areas in case of electrical power failure.

(3) No new fire station or new addition to an existing fire station, shall incorporate sliding poles or slides in their design or construction.

(4) The requirements of chapter 296-24 WAC, Part B-2, Window washing, shall be followed when employees are engaged in window washing operations.

(5) All new fire stations and other new fire department facilities which contain sleeping quarters shall be fully protected with automatic sprinkler systems.

(6) All existing fire stations and existing fire department facilities with sleeping quarters, that undergo a major renovation that consists of more than sixty percent of the assessed evaluation of the existing structure shall be fully protected with automatic sprinkler systems.

(7) Eye protection shall be worn when charging, changing or adding fluid to storage batteries. Personnel that will be charging storage batteries shall be qualified to perform this function by the employer. See WAC 296-24-23015.

(8) Stairway tread shall be of a nonskid design. Examples of nonskid: Grip strut grating, serrated edge grating, metal grating, aluminum safety tread, abrasive metal stair tread, or pressure sensitive nonskid type.

(9) In existing facilities where sliding poles or slides are used, the pole or slide hole shall be guarded in such a manner as to prevent anyone from walking directly into the pole or slide hole opening.

(10) To absorb the shock to sliding employees, the bottom of all slide poles or slides shall have a three-foot diameter cushioned rubber mat, or its equivalent.

(11) Nothing shall be stored or placed at the bottom of a pole or slide hole for a radius of three feet from the pole. Doors shall not protrude within three feet of the pole or slide.

(12) Stair and landing protection: Stairways, guardrails, landings, and handrails shall be constructed to the requirements of chapter 19.27 RCW the State Building Code Act, and chapter 296-24 WAC, Part J-1.

(13) A standard guard railing for a landing platform shall include a toeboard, which is a vertical barrier, at floor level erected along exposed edges of a floor opening, wall opening, platform, runway or ramp to prevent falls of material.

(14) Any new facility, or addition, alteration, or repair to an existing facility shall be in compliance with chapter 19.27 RCW, the State Building Code Act.

(15) New stations containing a kitchen, and station kitchens remodeled after the date of this chapter, shall have an alarm activated service disconnect of fixed cooking appliances.

[Statutory Authority: RCW 49.17.010, [49.17].040, and [49.17].050. 01-11-038, § 296-305-06503, filed 5/9/01, effective 9/1/01. Statutory Authority: RCW 49.17.010, [49.17].050 and [49.17].060. 96-11-067, § 296-305-06503, filed 5/10/96, effective 1/1/97. Statutory Authority: RCW 49.17.040 and 49.17.050. 83-24-013 (Order 83-34), § 296-305-06503, filed 11/30/83; Order 77-20, § 296-305-06503, filed 10/18/77 and Emergency Order 77-24, filed 11/17/77, effective 12/17/77.]

WAC 296-305-06505 Sanitation, disinfection, cleaning, and storage areas. (1) Fire departments shall provide facilities for disinfecting, cleaning, and storage.

(2) A designated cleaning area shall be provided for under the fire department's exposure control plan for the cleaning and disinfecting of protective equipment, portable equipment, and other clothing.

(a) Fire departments that engage in emergency medical operations shall provide or have access to disinfecting facilities for the cleaning and disinfecting of emergency medical equipment.

(b) Disinfecting shall not be conducted in fire station kitchen, living, sleeping, or personal hygiene areas.

(c) Disinfecting facilities in fire stations shall be vented to the outside environment, and designed to prevent contamination of other fire station areas.

(d) The disinfecting facility shall contain a sink with hot and cold water faucets. All surfaces shall be nonporous surfaces.

(e) Handwashing facilities shall be readily accessible to members. Handwashing facility means a facility providing an adequate supply of running potable water, soap and single use towels or hot air drying machines. When provision of

handwashing facilities is not feasible, the employer shall provide either an appropriate antiseptic hand cleaner in conjunction with clean cloth/paper towelettes or antiseptic towelettes.

(3) Protective clothing or equipment that needs to be decontaminated and/or disinfected shall not be allowed in any kitchen, living, sleeping, or personal hygiene area.

(4) The designated cleaning area shall be physically separate from areas used for food preparation, cleaning of food and cooking utensils, personal hygiene, sleeping, and living areas.

(5) Drying areas for protective clothing shall be well ventilated.

(6) Storage areas: Emergency medical supplies and equipment stored in fire stations, other than that stored on vehicles, shall be stored in a dedicated enclosure and maintained per manufacturer's instructions.

(7) Reusable emergency medical supplies and equipment, protective clothing, and protective equipment shall not be stored in kitchen, living, sleeping, or personal hygiene areas, nor shall it be stored in personal clothing lockers.

[Statutory Authority: RCW 49.17.010, [49.17].050 and [49.17].060. 96-11-067, § 296-305-06505, filed 5/10/96, effective 1/1/97. Statutory Authority: Chapter 49.17 RCW. 88-14-108 (Order 88-11), § 296-305-06505, filed 7/6/88. Statutory Authority: RCW 49.17.040 and 49.17.050. 83-24-013 (Order 83-34), § 296-305-06505, filed 11/30/83; Order 77-20, § 296-305-06505, filed 10/18/77 and Emergency Order 77-24, filed 11/17/77, effective 12/17/77.]

WAC 296-305-06507 Sleeping areas. (1) All sleeping areas in fire stations shall be separated from vehicle storage areas by at least one-hour fire resistive assemblies. Compliance with this section shall be required within three years of the effective date of this chapter.

(2) Sleeping areas shall be protected by smoke detectors.

[Statutory Authority: RCW 49.17.010, [49.17].050 and [49.17].060. 96-11-067, § 296-305-06507, filed 5/10/96, effective 1/1/97. Statutory Authority: Chapter 49.17 RCW. 88-14-108 (Order 88-11), § 296-305-06507, filed 7/6/88; Order 77-20, § 296-305-06507, filed 10/18/77 and Emergency Order 77-24, filed 11/17/77, effective 12/17/77.]

WAC 296-305-06509 Apparatus areas. (1) Three feet of clearance shall be maintained around apparatus parked within the station where the station's width permits.

(2) All fire stations built after December 17, 1977, shall have a minimum of three feet of clearance around the apparatus, which shall be maintained free of any storage or obstruction.

(3) The station's apparatus floors shall be kept free of grease, oil, water and tripping hazards.

(4) Floors shall have slip-resistant surfaces on areas where personnel would normally mount or dismount apparatus.

(5) No Class I or Class II flammable liquids shall be used for cleaning purposes to remove grease or dirt from apparatus.

[Statutory Authority: RCW 49.17.010, [49.17].050 and [49.17].060. 96-11-067, § 296-305-06509, filed 5/10/96, effective 1/1/97. Statutory Authority: Chapter 49.17 RCW. 88-14-108 (Order 88-11), § 296-305-06509, filed 7/6/88. Statutory Authority: RCW 49.17.040 and 49.17.050. 83-24-013 (Order 83-34), § 296-305-06509, filed 11/30/83; Order 77-20, § 296-305-06509, filed 10/18/77 and Emergency Order 77-24, filed 11/17/77, effective 12/17/77.]

WAC 296-305-06511 Indoor air quality. Air quality shall be consistent with WAC 296-62-075 through 296-62-07515, Air contaminants and WAC 296-800-240, Environmental tobacco smoke.

Note: For extended work shifts all eight-hour PEL's shall be time-weighted to adjust for additional worker exposure during extended work shifts.

(1) If indoor air monitoring indicates over-exposure to contaminant PEL's, engineering controls shall be utilized to reduce fire fighter exposure to the lowest feasible level.

(2) All fixed internal combustion equipment such as, but not limited to emergency generators, shall be effectively exhausted to the exterior of the fire stations.

(3) All facilities dedicated to the maintenance and repair of internal combustion equipment shall have means for effective ventilation to the exterior of the building.

(4) All fire stations built after January 1, 1997, shall be designed and constructed to conform to ACGIH ventilation recommended criteria for exhaust of internal combustion engines.

Additional reference: Industrial Ventilation Manual of Recommended Practices ISBN No.: 0-936712-65-1.

[Statutory Authority: RCW 49.17.010, [49.17].040, and [49.17].050. 01-11-038, § 296-305-06511, filed 5/9/01, effective 9/1/01. Statutory Authority: RCW 49.17.010, [49.17].050 and [49.17].060. 96-11-067, § 296-305-06511, filed 5/10/96, effective 1/1/97; Order 77-20, § 296-305-06511, filed 10/18/77 and Emergency Order 77-24, filed 11/17/77, effective 12/17/77.]

WAC 296-305-06513 Refueling areas. (1) Refueling pumps, if installed, shall be in accordance with the provisions of the Uniform Fire Code and WAC 296-24-33015.

(2) Dispensing of Class 1 liquids shall be as required in the Uniform Fire Code.

(3) Spillage of oil or fuel shall be properly disposed of or completely evaporated and the fuel tank cap replaced before restarting engine.

(4) Fueling areas shall be posted - "NO SMOKING - STOP YOUR MOTOR."

[Statutory Authority: RCW 49.17.010, [49.17].050 and [49.17].060. 96-11-067, § 296-305-06513, filed 5/10/96, effective 1/1/97; Order 77-20, § 296-305-06513, filed 10/18/77 and Emergency Order 77-24, filed 11/17/77, effective 12/17/77.]

WAC 296-305-06515 Hose drying towers. (1) The floor openings on hose tower platforms shall be equipped with a forty-two inch guardrail with mid-rail and shall be capable of withstanding a force of 250 pounds applied in any direction at any point on the top rail. The work platform shall be equipped with toeboards.

(2) The requirements for offset ladder platforms and ladder cage guards, when ladders extend beyond twenty feet, shall apply to hose drying towers.

(3) Ropes and attachments used to hoist hose in the hose towers shall have a breaking strength of 1500 pounds for a safe load strength of 300 pounds (five-to-one safety factor).

(4) Approved head protection shall be worn by all persons in the hose tower whenever hose handling/hanging operations are taking place.

(5) Ropes utilizing a pulley block shall be appropriately sized for the sheave to prevent possible jamming or damage to the rope.

Additional reference: Chapter 296-24 WAC, Part J-1 and chapter 296-800 WAC.

[Statutory Authority: RCW 49.17.010, [49.17].040, and [49.17].050. 01-11-038, § 296-305-06515, filed 5/9/01, effective 9/1/01. Statutory Authority: RCW 49.17.010, [49.17].050 and [49.17].060. 96-11-067, § 296-305-06515, filed 5/10/96, effective 1/1/97; Order 77-20, § 296-305-06515, filed 10/18/77 and Emergency Order 77-24, filed 11/17/77, effective 12/17/77.]

WAC 296-305-06517 Drill tower training facilities. (1) Permanent fixed ladders on the outside of drill towers and drill buildings are exempt from the requirements of offset platform landings and ladder cage guards.

(2) Drill tower construction and operations shall comply with the following:

(a) Burn buildings used for live fire training shall be engineered for such use.

(b) Drill towers shall not be used for live fire training except when burn rooms are provided.

(c) Burn rooms, if included in the building, shall be engineered into drill towers.

(d) All walking surfaces in the drill tower shall be slip resistant.

(e) Railings shall be designed with a four-to-one safety ratio for 250 pound fire fighters who may be operating a charged hose line on the fire escape.

(f) Rappelling anchors shall be engineered to support 4500 pounds per person supported by the anchor.

(g) Rappelling anchors shall be readily identifiable.

(h) Rappelling anchors shall be certified by a structural engineer.

[Statutory Authority: RCW 49.17.010, [49.17].050 and [49.17].060. 96-11-067, § 296-305-06517, filed 5/10/96, effective 1/1/97. Statutory Authority: RCW 49.17.040 and 49.17.050. 83-24-013 (Order 83-34), § 296-305-06517, filed 11/30/83; Order 77-20, § 296-305-06517, filed 10/18/77 and Emergency Order 77-24, filed 11/17/77, effective 12/17/77.]

WAC 296-305-06519 Fire station equipment and tools. (1) Equipment and tools in maintenance shops shall be guarded as required by the guarding provisions of chapter 296-806 WAC, Machine safety, and chapter 296-807, Portable power tools.

(2) Exposure of fan blades. When the periphery of the blades of a fan is less than ten feet above the floor or working level, the blades shall be guarded. The guard shall have openings no larger than one-half inch. This provision shall not apply to residential ceiling fans.

(3) Abrasive wheels and grinders.

(a) All abrasive wheels and grinders, shall be guarded as required by chapter 296-806 WAC, Machine safety.

(b) Goggles or face shields shall be used when grinding.

(c) Abrasive and composite blades shall be stored and protected against exposure to fuel and oil.

(d) Work rests on bench mounted abrasive wheel grinders shall be used to support the work. These shall be of rigid construction and designed to be adjustable to compensate for wheel wear. Work rests shall be kept adjusted sufficiently close to the wheel with a maximum opening of one-eighth inch to prevent the work from being jammed between the wheel and the rest. Adjustment of the work rest shall not be made while the wheel is turning.

[Statutory Authority: RCW 49.17.010, 49.17.040, 49.17.050, and 49.17.060. 04-14-028, § 296-305-06519, filed 6/29/04, effective 1/1/05. Statutory Authority: RCW 49.17.010, [49.17].050 and [49.17].060. 96-11-067, § 296-305-06519, filed 5/10/96, effective 1/1/97.]

WAC 296-305-07001 Wildland fire operations. (1) This section shall apply to all personnel and agencies called on to provide services at any fire defined as a "wildland fire."

(2) This section shall not apply to suppression action taken on fires prior to the fire meeting the definition of a "wildland fire."

(3) Employers shall provide at no cost to the employee, the protective equipment and protective clothing required by this chapter. Personnel performing suppression actions on a wildland fire shall wear the provided protective clothing as directed by their fire department's procedures/guidelines.

[Statutory Authority: RCW 49.17.010, [49.17].050 and [49.17].060. 96-11-067, § 296-305-07001, filed 5/10/96, effective 1/1/97. Statutory Authority: Chapter 49.17 RCW. 88-14-108 (Order 88-11), § 296-305-07001, filed 7/6/88. Statutory Authority: RCW 49.17.040 and 49.17.050. 83-24-013 (Order 83-34), § 296-305-07001, filed 11/30/83; Order 77-20, § 296-305-07001, filed 10/18/77 and Emergency Order 77-24, filed 11/17/77, effective 12/17/77.]

WAC 296-305-07003 Personal protective clothing and equipment for wildland fire fighting. (1) Protective apparel and equipment for wildland fire fighters shall be designed to provide thermal protection for the fire fighters against external heat sources with flame resistant clothing and equipment without creating high heat stress loads due to the prolonged work periods they experience. Members performing suppression on a wildland fire shall wear a provided protective clothing ensemble as directed by their employer. The combined protective clothing ensemble includes:

(a) Hardhat/helmet

(b) Upper and lower torso clothing

(c) Gloves

(d) Goggles

NFPA Standard Protective Clothing and Equipment for Wildland Fire fighting 1977, 1993 edition shall serve as a guideline for determining performance characteristics of this clothing.

(2) As a minimum, members shall wear provided leather lace-up boots of sturdy construction which shall extend upward a minimum of 8 inches above the top of the sole, which shall be slip resistant.

(3) Additional personal protective equipment to be provided and worn shall include a fire shelter as directed by the incident commander.

(4) Wildland protective clothing shall comply with this standard within two years of the effective date of this chapter.

(5) Personnel operating Type 1 or Type 2 engines assigned to structural protection will carry structural protective clothing on their assigned apparatus.

(6) Wildland personnel protective clothing shall not be used for interior structural fire fighting.

(7) Persons provided fire shelters shall be trained in their use and shall receive refresher training at least annually.

(8) Personnel wearing full structural fire fighting clothing while engaged in fighting wildland fires shall not expend more than one hour before rotating to rest and rehabilitation. Agencies may rotate crews to avoid the one-hour benchmark when containing and controlling wildland fires.

(9) Fire departments shall establish written procedures for the care, use, maintenance, and retirement criteria for protective equipment in conjunction with the manufacturers' recommendations.

(10) Fire departments shall establish written procedures for the use of protective clothing and protective equipment while performing fire fighting activities.

[Statutory Authority: RCW 49.17.010, [49.17].050 and [49.17].060. 96-11-067, § 296-305-07003, filed 5/10/96, effective 1/1/97. Statutory Authority: Chapter 49.17 RCW. 88-14-108 (Order 88-11), § 296-305-07003, filed 7/6/88. Statutory Authority: RCW 49.17.040 and 49.17.050. 83-24-013 (Order 83-34), § 296-305-07003, filed 11/30/83; Order 77-20, § 296-305-07003, filed 10/18/77 and Emergency Order 77-24, filed 11/17/77, effective 12/17/77.]

WAC 296-305-07005 Respiratory protection for wildland fire fighters.

[Statutory Authority: RCW 49.17.010, [49.17].050 and [49.17].060. 96-11-067, § 296-305-07005, filed 5/10/96, effective 1/1/97. Statutory Authority: RCW 49.17.040 and 49.17.050. 83-24-013 (Order 83-34), § 296-305-07005, filed 11/30/83; Order 77-20, § 296-305-07005, filed 10/18/77 and Emergency Order 77-24, filed 11/17/77, effective 12/17/77.]

WAC 296-305-07007 Wildland personnel accountability. (1) Wildland fire fighters shall not be required to wear personal alerting devices except when wearing self contained respiratory equipment.

(2) An officer shall maintain positive communication with any individual during those times that the member is assigned an ancillary fire fighting task (examples would include, but are not limited to, scout, safety officer, or watch person).

(3) Wildland fire fighters shall work in teams of two or more while working on or near the fire line of an active fire unless they are in visual or voice contact with an officer.

(4) On initial attack fires, the incident commander shall:

(a) Maintain the name and location of all personnel on the incident.

(b) On extended attack fires, ensure the maintenance of the name and location of all personnel within their unit, division, or branch.

(c) Transfer/confirm personnel and unit information to the appropriate incident command section (ICS) command staff as soon as possible.

(d) Ensure that personnel and unit information is recorded in the command post as soon as possible.

(5) When a fire "blows up" or makes a run that crosses planned control lines, officers shall conduct an accounting of all personnel assigned to fire suppression and report any missing personnel to the incident commander.

[Statutory Authority: RCW 49.17.010, [49.17].050 and [49.17].060. 96-11-067, § 296-305-07007, filed 5/10/96, effective 1/1/97. Statutory Authority: RCW 49.17.040 and 49.17.050. 83-24-013 (Order 83-34), § 296-305-07007, filed 11/30/83; Order 77-20, § 296-305-07007, filed 10/18/77 and Emergency Order 77-24, filed 11/17/77, effective 12/17/77.]

WAC 296-305-07009 Apparatus standards for wildland fire fighting. This section applies to wildland fire apparatus meeting the NIIMS ICS typing of a Type 3 through Type 7 engine, and intended for use combating fires occurring in natural vegetation or occurring in natural vegetation and threatening improvements. See Appendix D for equipment types.

(1) In a wildland fire, an engine may provide the primary protection for a crew in the event of unexpected fire behavior or an action that places the engine crew in a position of being exposed to heat and smoke.

(2) Apparatus speed shall be determined to be safe if in the judgment of the officer in charge, the following are taken into consideration:

(a) The particular wildland fire attack methods being utilized including, but not limited to the nature of the fire, the type of terrain, weather conditions, equipment conditions, and whether personnel are positioned in wildland fire fighting enclosures;

(b) The forgoing provision shall not relieve a driver from the duty to drive with due regard for the safety of all persons in all conditions;

(c) Nor shall such provision protect the driver from the consequences of his/her reckless disregard for the safety of others.

(3) Because of the sheltering offered by an engine, the following minimum standards shall be complied with:

(a) The number of individuals working/assigned as an engine crew shall not exceed the manufacturer's cab capacity.

(b) Any time an engine is moved when not directly attacking a fire, personnel shall ride in the vehicle's enclosed cabin area, in a seat-belted location, or be off the vehicle.

(c) Any time engines are used in a mobile attack configuration, and personnel other than the driver are on the apparatus, personnel shall ride in the manufacturer's enclosed cabin, or use the personnel restraints and enclosures identified in WAC 296-305-07011.

(d) All personnel working on or around engines in a ground mobile attack mode or in riding positions shall have visual or voice contact with the driver.

(e) Vehicles operating in smoke or dust shall have their headlights, and if so equipped, a flashing or rotating roof light illuminated.

[Statutory Authority: RCW 49.17.010, [49.17].050 and [49.17].060. 96-11-067, § 296-305-07009, filed 5/10/96, effective 1/1/97; Order 77-20, § 296-305-07009, filed 10/18/77 and Emergency Order 77-24, filed 11/17/77, effective 12/17/77.]

WAC 296-305-07011 Occupant restraints and enclosures for wildland fire fighting. (1) While in motion, the driver and passengers in the cab shall wear seatbelts.

(2) Seatbelts shall comply with U.S. Department of Transportation, Part 49 CFR, Section 571, Standards 209 and 210.

(3) Passengers on wildland vehicles shall use a safety belt or a short lanyard securely connected to the apparatus.

(a) Safety belts or lanyards shall be secured to an anchorage or structural member capable of supporting a minimum dead weight of 1500 pounds per person or a 4:1 safety factor.

(b) Safety lanyard lengths shall not allow for the fire fighter to reach the ground.

(4) Safety belts shall be constructed and maintained in compliance with ANSI A10.14-1975.

(5) Lanyards shall be a minimum of one-half inch nylon or equivalent with a nominal breaking strength of 5400 pounds.

(6) The structural components for wildland vehicle enclosures shall be constructed of metal tubing not less than

1 inch in diameter, capable of supporting a minimum of 1500 pounds per person, a 4:1 safety ratio or the equivalent. This applies to vehicle enclosures manufactured after the effective date of this chapter.

(7) The enclosure shall be constructed to a minimum toprail height of forty-two inches and shall include a midrail and either a toeboard at least four inches high or a bottom rail a maximum of six inches from the platform.

(8) Access door(s) and latching mechanisms to tail board enclosures shall be constructed and mounted to achieve structural integrity comparable to the remainder of the enclosure.

(9) A strap or butt-bar utilized for the fourth side of the enclosure shall be a minimum of a four-inch nylon strap capable of supporting 1500 pounds dead weight.

(10) Fire fighters while actively fighting a fire in the mobile attack mode shall remain in a three-sided enclosure and use a safety lanyard. When actively fighting a fire in the mobile attack mode, fire fighters shall remain in a four-sided enclosure but the use of a lanyard is optional and should follow the fire department's operating procedures.

[Statutory Authority: RCW 49.17.010, [49.17].050 and [49.17].060. 96-11-067, § 296-305-07011, filed 5/10/96, effective 1/1/97.]

WAC 296-305-07013 Equipment for wildland fire fighting.

Note: Equipment is considered in this section as those items not configured as a part or portion of the vehicle body.

(1) All equipment on an apparatus shall be carried in an enclosed compartment or otherwise securely mounted on the apparatus and guarded, so that individuals can not accidentally come in contact with equipment that may injure them.

(2) All hand tools, when not in use, shall have appropriate covers and guards to prevent injury.

(3) Wildland fire fighters whose duties require them to operate a power chain saw shall wear flexible ballistic nylon pads, sewn or otherwise fastened into the trousers, or other equivalent protection that shall protect the vulnerable areas of the legs. Additional trouser, eye, hearing, face and head protection as required by this chapter shall be worn.

(4) Employees shall not use the chainsaw to cut directly overhead, or at a distance that would require the operator to relinquish a safe grip on the saw.

(5) Only personnel trained in firing equipment shall handle and use such equipment, and observe the manufacturers' recommendations.

[Statutory Authority: RCW 49.17.010, [49.17].050 and [49.17].060. 96-11-067, § 296-305-07013, filed 5/10/96, effective 1/1/97.]

WAC 296-305-07015 Aircraft operations for fighting wildland fires. (1) Whenever fixed wing and rotary wing aircraft are being utilized on an incident, personnel trained in air operations management shall be assigned by the incident commander/operations section chief.

(2) Prior to the initiation of air operations, all personnel operating in close proximity to an air drop shall be notified of such activity.

(3) Personnel shall not intentionally operate in an area where it can reasonably be expected that they may be hit with retardants or suppressants from fixed wing or rotary aircraft.

(4) Radio communications shall be maintained between an aircraft/air attack officer and the appropriate ground officer.

(5) Personnel assigned to ride in rotary wing aircraft shall be briefed in the correct approach, riding and off-loading procedures for the particular type of aircraft.

[Statutory Authority: RCW 49.17.010, [49.17].050 and [49.17].060. 96-11-067, § 296-305-07015, filed 5/10/96, effective 1/1/97.]

WAC 296-305-07017 First aid for wildland fire fighters. (1) At all wildland fires, members shall be provided with a minimum of one quart per two-hour time period of electrolyte drinks or potable water.

(2) Officers at wildland fires shall be trained in the symptoms of heat-related disorders and shall observe their crews for such behavior. Appropriate action shall be taken in the event a crew member displays such symptoms.

[Statutory Authority: RCW 49.17.010, [49.17].050 and [49.17].060. 96-11-067, § 296-305-07017, filed 5/10/96, effective 1/1/97.]

WAC 296-305-07019 Training for wildland fire fighting. (1) This section shall apply to all personnel and agencies called on to provide services at any fire defined as a "wildland fire."

(2) This section shall not apply to suppression actions taken on fires prior to the fire meeting the definition of a "wildland fire."

(3) Suppression personnel assigned to a wildland fire shall be trained to a NWCG Fire Fighter level II or a comparable class of training.

(a) "Comparable" training shall be determined by the employer.

(b) Nothing in this section shall preclude the use of local residents, affected parties or contracted fire fighting resources to suppress wildland fires if they are under the direct supervision of a qualified fire line officer.

(4) Supervisory personnel shall be trained to a level commensurate to the position and responsibility they are to assume.

(5) All personnel will be trained and capable of demonstrating competency in utilizing the Incident Command System (ICS).

(6) All suppression personnel shall annually review the Standard Operating Safety Procedures. See Appendix D.

[Statutory Authority: RCW 49.17.010, [49.17].050 and [49.17].060. 96-11-067, § 296-305-07019, filed 5/10/96, effective 1/1/97.]

WAC 296-305-08000 Appendices. These appendices are nonmandatory and are included to reference and information purposes only.

Appendix A — Recommended cleaning procedures for protective turnout clothing and station uniforms.

(1) Protective clothing should be washed separately from other garments.

(2) Do not use chlorine bleach (sodium hypochlorite) as this will adversely affect the tear strength of your protective clothing and lessen its life. Oxygenated bleaches such as Liquid Clorox II, and Vivid may be used.

(3) Protective clothing may be spot treated or pretreated for hard to remove stains with products such as liquid Spray

and Wash, liquid Tide, liquid dishwashing detergent or liquid Shout.

Note: The use of brand names is intended only to indicate a type of cleaning agent. All products listed by name must be used in accordance with the manufacturer's recommendations. Use of a brand name does not constitute an endorsement nor does omission of a particular product brand imply that a product is inferior. Solvents should not be used as they lesson the life of the garment, reduce visibility on the trim, and degrade leather.

(4) When pretreating or spot treating a garment, apply the detergent onto the soiled area. Gently rub the fabric together until a light foam appears on the surface. Use a soft bristle brush (toothbrush type) and scrub the area for about one and one-half minutes. Reapply liquid detergent onto the soiled area and place the garment into the washing machine.

(5) When cleaning turnout clothing the garment should be turned inside out, the hooks and dees fastened, the liner removed, and the garment placed in a laundry bag. These instructions can be used for cleaning any wash loads in a large capacity (sixteen gallon) top loading or front loading machine. Load the machine with any one of the following combinations - do not overload:

(a) One protective coat and one pair of trousers.

(b) Two protective coats.

(c) Two protective pair of trousers.

Note: Heavily soiled garments should be treated as outlined in (4).

(6) While the washing machine is filling with hot water (temperature between 120 degrees F and 130 degrees F), add one-half cup (four ounces) of liquid oxygenated bleach and one cup (eight ounces) of liquid detergent.

(a) Fill washing machine to highest water level,

(b) Add garments to be washed,

(c) Set washing machine for normal cycle, cotton white, or similar setting.

(d) Machines should be programmed for a double rinse. If the machine will not automatically double rinse, a complete second cycle can be run without adding detergent or oxygenated bleach. Double rinse helps remove any residual dirt and ensures detergent removal.

(e) Remove garments from washing machine when done and dry by hanging in a shaded area that receives good cross ventilation, or hang on a line and use a fan to circulate air. A water extractor may be utilized.

(f) After the garments have been removed, run the laundry machine empty or with a dummy (rag) load with detergent at least once; but preferably several times to purge the machine of any residue.

(7) Inspect and examine the trim as to the effectiveness of the trim performance under daytime and nighttime conditions. It is important that a high visibility be maintained at all possible orientations to the light source.

(8) The above procedures can be used for any article of clothing issued that is not contaminated with bloodborne pathogens or any other infectious disease. For clothing exposed to hazardous materials, consult the manufacturer or the appropriate decontamination document.

(9) Procedure for clothing (except wool clothing) that has been exposed to bloodborne pathogens or infectious diseases.

(a) Disposable gloves should be used when handling contaminated clothing.

(b) Each station should have an area designated for the cleaning of equipment. The area designated should not be near kitchen, living, sleeping, or personal hygiene areas.

(c) Contaminated clothing should be handled as little as possible with a minimum of agitation. Contaminated clothing should be cleaned as soon as possible. When the on-coming shift has to clean contaminated clothing for the off-going shift, all contaminated clothing should be stored in red biohazard bags, properly sealed to prevent the spread of potential contamination.

(d) To clean clothing that has been contaminated, a germicidal detergent should be used. Such germicidal should be EPA approved and effective as staphylocidal, pseudomonacidial, virucidal, and fungicicial detergent.

(e) The germicidal detergent is intended to be a complete disinfecting and cleaning agent when mixed according to the manufacturer's directions. Do not add any chemical or detergent to the germicidal solution. After the clothing has been disinfected the clothing should be washed as outlined under normal use.

(f) Wool uniforms should be spot cleaned, placed in the red biohazard bags and sent to an industrial laundry for cleaning.

(10) Helmets, gloves, hoods, and boots should be cleaned as follows:

(a) Preclean using a germicidal solution and scrub all contaminated areas with a soft bristled brush. Rinse with clean water. Dispose of the precleaning solution by pouring it down the drain in the cleaning area.

(b) Using a fresh germicidal solution, repeat the above procedure allowing the areas to remain wet for a minimum of fifteen minutes. Double rinse with clean water and air dry. Dispose of the solution by pouring it down the drain in the cleaning area.

(c) For gloves, use a third fresh water rinse, squeezing and rinsing several times. Dispose of the solution by pouring it down the drain in the cleaning area.

(11) Front loading industrial laundry machines are designed for the type of cleaning required for protective clothing. Machines are available from Milnor, Model 30015C6M-AAC, for washing; or a Huabsch Originator, Model 3705H, for a dryer.

Note: The use of brand names is intended only to indicate a type of cleaning equipment. All products listed by name must be used in accordance with the manufacturer's recommendations. Use of a brand name does not constitute an endorsement nor does omission of a particular product brand imply that a product is inferior.

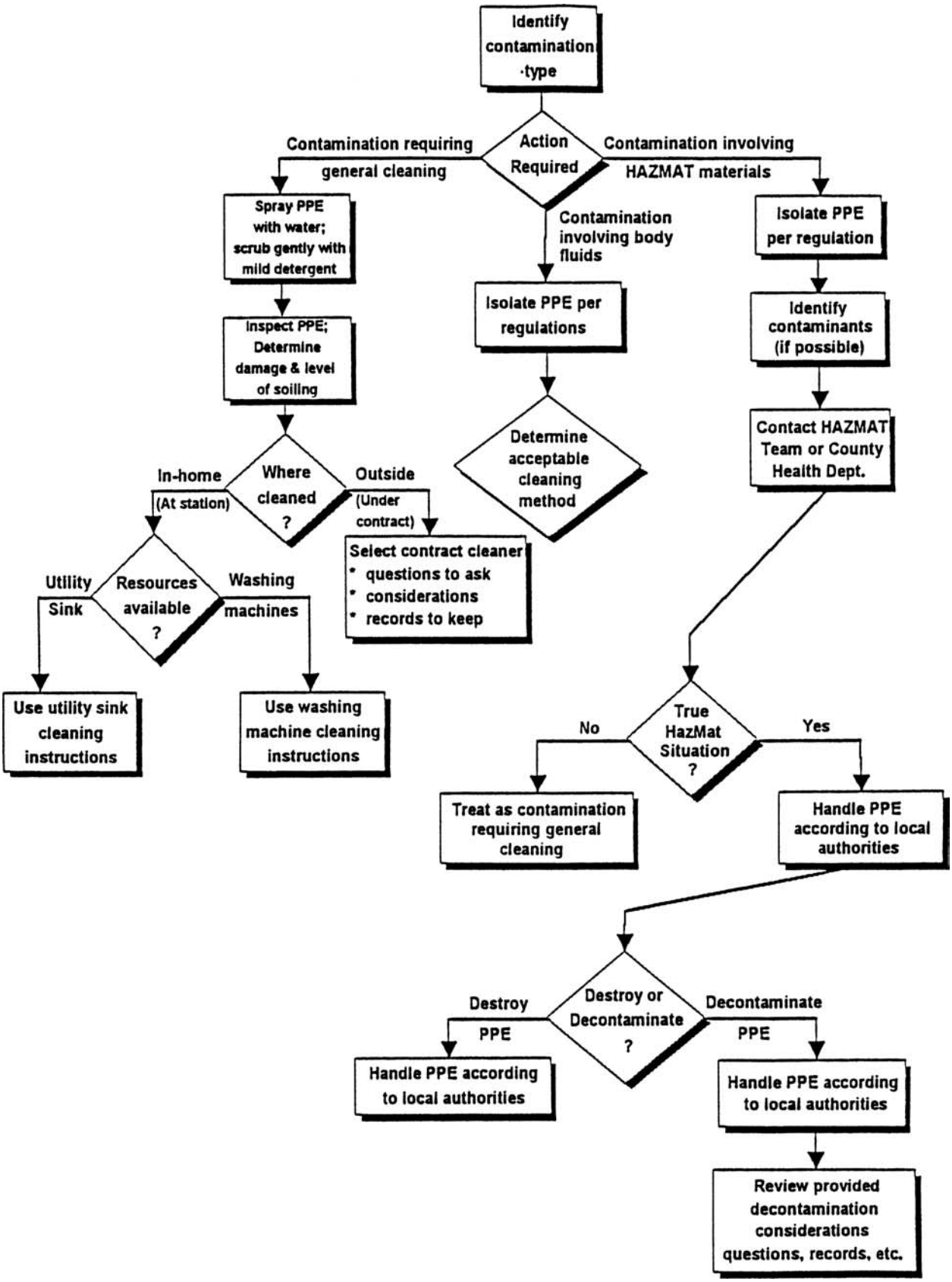

PPE Cleaning and Decontamination Decision-Making Process

Appendix B — Life safety ropes. (1) Life safety rope may be significantly weakened by abrasion, misuse, contamination, wear, and stresses approaching its breaking strength, particularly impact loading. Since there are no approved methods to service test a rope without compromising its strength, rope rescue and training operations should be carefully observed and monitored for conditions that could cause immediate failure or result in undetectable damage to the rope.

(2) If a rope has been used in a situation that could not be supervised or where potential damage may have occurred, it must be removed from service and destroyed.

(3) It is important that ropes be inspected for signs of wear by qualified individuals after each use. If indication of wear or damage are noted, or if the rope has been stressed in excess of the manufacturer's recommendation or impact loaded, it must be destroyed.

(4) The destruction of the rope means that it must be removed from service and altered in such a manner that it could not be mistakenly used as a life safety rope. This alteration could include disposing of the rope, or removal of identifying labels and attachments, and cutting the rope into short lengths that could be used for utility purposes.

(5) The assignment of "disposable" life safety ropes to members or to vehicles has proved to be an effective system to manage ropes that are provided for emergency use and are used infrequently. Special rescue teams, which train frequently and use large quantities of rope, should include members who are qualified to manage and evaluate the condition of their ropes and determine the limitations upon their reuse.

Appendix C — Decontamination. (1) A decontamination area should be established whenever civilians or fire department personnel have had known or suspected exposure to toxic chemicals.

(2) Such decontamination areas should be established before any personnel are allowed to enter the "Hot" zone.

(3) The decontamination area should be set up using the following guidelines:

(a) The decontamination area should be located uphill, upwind and at a right angle to the "Hot" zone.

(b) The decontamination area entry/exit point and boundaries should be clearly marked using flagging tape, ropes, cones, etc.

(3) Visqueene should be spread on the ground in the decontamination area to control runoff.

(4) The decontamination process is divided into stations. In most cases it will not be necessary to utilize all the stations. The decision to use all or part of the stations should be based on the following factors:

(a) The hazards associated with the product involved.

(b) The estimated levels of contamination.

(c) The type of protective equipment worn by contaminated responders.

(d) Recommendations from outside sources such as, but not limited to CHEMTREC, the agency for toxic substance and disease registry, poison control centers or the manufacturer of the product.

(5) The following is a list of all the stations in a nine-step decontamination area set up for a worst case scenario involving a hazardous materials response team member whose chemical suit has been breached:

(a) Station #1 - Segregated equipment drop: Contaminated equipment that will be used again in the "Hot" zone, disposed of, or decontaminated at a later time or place, will be deposited here.

(b) Station #2 - Wash/rinse: Entry personnel will be washed with appropriate decontamination solution and rinsed with water by attendant(s) to remove gross contamination. This station may consist of multiple wash/rinse steps depending on the severity of the hazards involved.

(c) Station #3 - Outer protective clothing removal: Attendant(s) will remove the outer protective clothing from entry personnel being cautious to avoid touching the inside of the suit while removing it. Protective clothing that has been removed at this step shall be placed in an overpack or other appropriate container for later testing and further decontamination, if needed.

(d) Station #4 - Removal of SCBA: The entry personnel are assisted in removing their SCBA by an attendant. The SCBA facepiece should be left in place and the low pressure hose held away from any potentially contaminated inner clothing.

(e) Station #5 - Removal of inner clothing: All clothing worn inside the suit must be removed in cases where the suit has been penetrated and the entry personnel are contaminated.

(f) Station #6 - Personal shower: Entry personnel should wash and rinse entire body with mild soap and water. Contain runoff water if possible, however this is an emergency situation and containment is secondary to removing contaminants from personnel.

(g) Station #7 - Drying off: Entry personnel that have showered should dry off using towels or whatever is available. Items used should be placed in an appropriate container for disposal. Emergency clothing such as disposable coveralls should be provided.

(h) Station #8 - Medical evaluation: Entry personnel should be evaluated by paramedics - checking vital signs including temperature and level of consciousness. Records of the evaluation must be kept and given to the team safety officer to be included in the members exposure records.

(i) Station #9 - Transport to emergency room: Any personnel exhibiting any signs or symptoms of exposure should be transported to the emergency room for evaluation and observation.

(6) The hazardous materials response team van should carry premeasured packets of decontamination solution mixes for the purpose of decontaminating chemical protective clothing and other equipment at the scene of a hazardous materials emergency. These solutions are not to be used to decontaminate turnouts or exposed skin under any circumstances.

(7) The primary solution used will be a simple detergent and water mixture. Other special decontamination solution mixes will only be used in those situations when it is determined that the detergent and water solution is inappropriate.

(8) Contaminated civilians that are exhibiting signs or symptoms of exposure should be treated as patients. Due to the risk of secondary contamination, all patients should undergo emergency field decontamination at the scene before

being evaluated by medical personnel or being transported to the emergency room. Medical personnel should not accept any patient that has not been grossly decontaminated.

(9) The emergency field decontamination process should consist of removing the clothing from all affected body parts of the exposed person and flushing with copious quantities of water from a garden hose or low pressure one and three-quarter inch handline to remove gross contamination. Patients will be flushed for up to fifteen minutes, depending on the material recommendations on patient decontamination.

(10) Members performing patient decontamination should wear, at a minimum, full turnouts and SCBA and should avoid splashes and overspray to the extent possible. They should also undergo decontamination when they have finished decontaminating the patient.

(11) Containment of the runoff water from patient decontamination is not required. Do not delay decontamination of patients to set up containment. However, some form of privacy screen should be erected to protect the modesty of those being decontaminated.

(12) Responders that are contaminated in the process of performing rescue or other tasks will, at the minimum, be flushed with water for a minimum of one minute. Further flushing will be performed depending on the extent of contamination and subsequent adverse health effects.

Appendix D—Wildland Fire Fighting Equipment Typings.

	PUMP RATE GMP MINIMUM	TANK CAPACITY IN GALLONS
PUMPER/BRUSH ENGINE:		
ICS Type 7	20	125
ICS Type 6	50	200
ICS Type 5	50	500
ICS Type 4	70	750
ICS Type 3	120	300
PUMPER/CLASS A RATED:		
ICS Type 2	500	400
ICS Type 1	1000	400

Ten standard fire orders

Fight fire aggressively but provide for safety first.

Initiate all action based on current and expected fire behavior.

Recognize current weather conditions and obtain forecasts.

Ensure instructions are given and understood.

Obtain current information on fire status.

Remain in communication with crew members, your supervisor, and adjoining forces.

Determine safety zones and escape routes.

Establish lookouts in potentially hazardous situations.

Retain control at all times.

Stay alert, keep calm, think clearly, act decisively.

Four common denominators of tragedy fires

1. Small fires or relatively quiet sectors of large fires.
2. Light fuels.
3. Steep slopes.
4. Change in wind speed and/or direction.

"Watch Out" Situations

1. Fire not scouted and sized up.
2. In country not seen in daylight.
3. Safety zones and escape routes not identified.
4. Unfamiliar with weather and local factors influencing fire behavior.
5. Uninformed on strategy, tactics and hazards.
6. Instructions and assignments not clear.
7. No communication link with crew members or supervisor.
8. Constructing line without safe anchor point.
9. Building fire line downhill with fire below.
10. Attempting frontal assault on fire.
11. Unburned fuel between you and fire.
12. Cannot see main fire, not in contact with someone who can.
13. On a hillside where rolling material can ignite fuel below.
14. Weather becoming hotter and drier.
15. Wind increases and/or changes direction.
16. Getting frequent spot fires across line.
17. Terrain and fuels make escape to safety zones difficult.
18. Taking nap near fire line.

National Wildlife Coordinating Group Fire Fighter II Performance Tasks

1. Agency policy for wildfires.
2. Extended attack fire orientation and dispatch.
3. Inmate orientation.
4. Fire line organization.
5. Tools and equipment.
6. Firing devices.
7. Wildland water delivery systems and pump use.
8. Introduction to wildland fire behavior.
9. Fire line safety.
10. Size up and initial attack.
11. Fire line construction.
12. Wildland fire investigation.
13. Structure protection.
14. Use of foam.
15. Mop up.
16. Compass use.
17. Map use.
18. Radio communications.
19. Incident command system.
20. Basic first aid.
21. Hazardous materials awareness.

Appendix E—Standard apparatus operation communications.

When fire fighters ride in the tiller's seat or other remote location, an electrical signal or voice communication should be installed between the tiller's seat, work station, and driver's compartment.

(1) These signals should be used between the driver and the fire fighters:

(a) One long buzz means stop;

(b) Two buzzes mean forward;

(c) Three buzzes mean reverse.

(2) Before any of the above functions are undertaken, with the exception of stopping, the same signal must be both

sent and received. The driver should not act without sending and receiving a confirming signal.

(3) When using hand signals, these signals are as follows:

STOP

Hold hand to the side, shoulder high, exposing palm to the driver. At night, hold hands in the same manner, with the addition of a flashlight in one hand shinning at the driver. This will indicate an immediate STOP.

STOP

Hold hand to the die, shoulder high, exposing palm to the driver. At night, hold hands in the same manner, with the addition of a flashlight in one hand shining at the driver. This will indicate an immediate STOP.

RIGHT OR LEFT

Point in the desired direction with one hand and motion in a circular "come-on" gesture with the other hand at the chest level. At night direct a flashlight beam at the hand pointing in the desired direction.

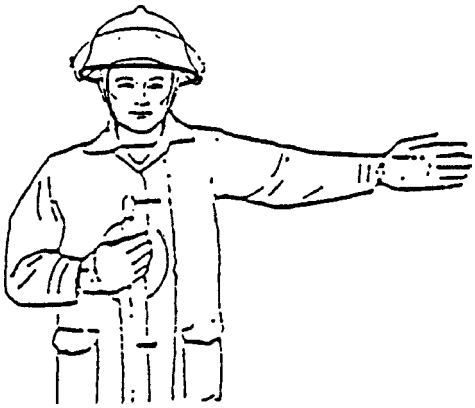

RIGHT OR LEFT

Point in the desired direction with one hand and motion in a circular "come-on" gesture with other at the chest level. At night, direct a flashlight beam at the hand pointing in the desired direction.

DIMINISHING CLEARANCE

Hold the hands to one side of the body indicating the approximate amount of distance the apparatus is from the obstacle. Close hands accordingly as the driver slowly maneuvers the apparatus to point where the signal indicates immediate STOP. Always allow enough for drivers reaction time.

At night, indicate in the same manner with the flashlight in the upper hands and beam directed at the palm of the other. On STOP, cover the flashlight beam with the hands.

DIMINISHING CLEARANCE

Hold the hands to one side of the body indicating the approximate amount of distance the apparatus is from the obstacle. Close hands accordingly as the driver slowly maneuvers the apparatus to point where the signal indicates immediate STOP. Always allow enough for divers reaction time. At night, indicate in the same manner with the flashlight in the upper hands and beam directed at the palm of the other. On STOP, cover the flashlight beam with the hands.

AHEAD OR BACK-UP

Hold hand directly in front, chest high, fingers on hands directed toward one another, and motion in a circular "come-on" gesture. At night hold a flashlight in one hand and direct the beam toward the other.

AHEAD OR BACK UP

Hold hand directly in front, chest high, fingers on hands directed toward one another, and motion in circular "come-on" gesture. At night hold a flashlight in one hand and direct the beam toward the other.

[Statutory Authority: RCW 49.17.010, [49.17].050 and [49.17].060. 96-11-067, § 296-305-08000, filed 5/10/96, effective 1/1/97.]

Chapter 296-307 WAC
SAFETY STANDARDS FOR AGRICULTURE

WAC

FIELD OPERATIONS AND GENERAL REQUIREMENTS

Part A
General and Educational Requirements

296-307-003 How is this chapter divided?
296-307-006 What does this chapter cover?
296-307-009 What definitions apply to this chapter?
296-307-012 What does it mean when equipment is approved by a nonstate organization?
296-307-015 What must an employer do if a serious injury occurs?
296-307-018 What are the employer's responsibilities?
296-307-021 What are the employee's responsibilities?
296-307-024 How does an employer apply for a variance?

Part B
Accident Prevention Program;
First-aid Requirements;
Safe Place Standard

296-307-030 What are the required elements of an accident prevention program?
296-307-033 How often must safety meetings be held?
296-307-036 What items go on the safety bulletin board?
296-307-039 First-aid rule summary.
296-307-03905 Make sure that first-aid trained personnel are available to provide quick and effective first aid.
296-307-03920 Make sure appropriate first-aid supplies are readily available.
296-307-03930 Make sure emergency washing facilities are functional and readily accessible.
296-307-03935 Inspect and activate your emergency washing facilities.
296-307-03940 Make sure supplemental flushing equipment provides sufficient water.
296-307-03945 Definitions.
296-307-045 What are the requirements of the safe place standard?

Part C
Hand Tools

296-307-050 What requirements apply to hand tools?

Part D
Ladders, Bulk Storage,
Pits, and Trenches

296-307-055 Ladders.
296-307-05501 How must ladders be cared for and maintained?
296-307-05503 How must an employer instruct employees to use ladders?
296-307-05505 How must orchard ladders be used?
296-307-05507 What other requirements apply to ladders?
296-307-060 What requirements apply to job-made ladders?
296-307-061 What requirements apply to working around bins, bunkers, hoppers, tanks, pits, and trenches?

Part E
Vehicles and Farm Field Equipment

296-307-065 How must slow-moving vehicles be marked?
296-307-070 Motor vehicles.
296-307-07001 How must motor vehicles be maintained?
296-307-07003 How must motor vehicles be operated?
296-307-07005 Who may operate motor vehicles?
296-307-07007 What requirements apply to motor vehicle brakes?
296-307-07009 How must motor vehicles be loaded and unloaded?
296-307-07011 What safety equipment must motor vehicles have?
296-307-07013 What rules apply to vehicles used to transport employees?
296-307-073 What requirements apply to changing and charging storage batteries?
296-307-076 How must farm field equipment be guarded?

Part F
Rollover Protective Structures (ROPS) for Tractors

296-307-080 Rollover protective structures (ROPS) for tractors.
296-307-08003 Which agricultural tractors are covered by this section?
296-307-08006 What definitions apply to rollover protective structures (ROPS) for agricultural tractors?
296-307-08009 What requirements apply to the testing and performance of ROPS used on agricultural tractors?
296-307-08012 What requirements apply to seatbelts used with ROPS on agricultural tractors?
296-307-08015 When are ROPS not required on agricultural tractors?
296-307-08018 What employee training requirements apply to ROPS used on agricultural tractors?
296-307-08021 What other requirements apply to ROPS used on agricultural tractors?
296-307-085 When must ROPS be provided for material handling equipment?
296-307-090 What requirements apply to overhead protection for operators of agricultural and industrial tractors?

Part G
Field Sanitation

296-307-095 Field sanitation.
296-307-09503 What does this section cover?
296-307-09506 What definitions apply to this section?
296-307-09509 What orientation must employers provide for field sanitation?
296-307-09512 What potable water sources must an employer provide?
296-307-09515 What handwashing facilities must an employer provide?
296-307-09518 What toilet facilities must an employer provide?

Part H
Personal Protective Equipment

296-307-100 Personal protective equipment.
296-307-10005 Who must provide personal protective equipment?
296-307-10010 What requirements apply to eye protection?
296-307-10015 How must personal protective equipment be used?
296-307-10020 What must an employer do to prevent heat-related illness?
296-307-10025 What instruction on personal protective equipment must an employer give to employees?

Part I
Pesticides
(Worker Protection Standard)

296-307-107 Federal worker protection standards—Washington state department of agriculture.
296-307-110 Scope and purpose—Worker protection standards—40 CFR, § 170.1.
296-307-11005 Definitions—Worker protection standards—40 CFR, § 170.3.
296-307-11010 General duties and prohibited actions—Worker protection standards—40 CFR, § 170.7.
296-307-11015 Violations of this part—Worker protection standards—40 CFR, § 170.9.

Standard for Workers

296-307-120 Applicability of this section—Standards for workers—40 CFR, § 170.102.
296-307-12005 Exceptions—Standards for workers—40 CFR, § 170.103.
296-307-12010 Exemptions—Standards for workers—40 CFR, § 170.104.
296-307-12015 Restrictions associated with pesticide applications—Standards for workers—40 CFR, § 170.110.
296-307-12020 Entry restrictions—Standards for workers—40 CFR, § 170.112.
296-307-12025 Notice of applications—Standards for workers—40 CFR, § 170.120.
296-307-12030 Providing specific information about applications—Standards for workers—40 CFR, § 170.122.
296-307-12035 Notice of applications to handler employers—Standards for workers—40 CFR, § 170.124.
296-307-12040 Pesticide safety training—Standards for workers—40 CFR, § 170.130.
296-307-12045 Posted pesticide safety information—Standards for workers—40 CFR, § 170.135.
296-307-12050 Decontamination—Standards for workers—40 CFR, § 170.150.
296-307-12055 Emergency assistance—Standards for workers—40 CFR, § 170.160.

Standard for Pesticide Handlers

296-307-130 Applicability of this section—Standards for pesticide handlers—40 CFR, § 170.202.
296-307-13005 Exemptions—Standards for handlers—40 CFR, § 170.204.
296-307-13010 Restrictions during applications—Standards for pesticide handlers—40 CFR, § 170.210.

296-307-13015 Providing specific information about applications—Standards for pesticide handlers—40 CFR, § 170.222.
296-307-13020 Notice of applications to agricultural employers—Standards for pesticide handlers—40 CFR, § 170.224.
296-307-13025 Pesticide safety training—Standards for pesticide handlers—40 CFR, § 170.230.
296-307-13030 Knowledge of labeling and site-specific information—Standards for pesticide handlers—40 CFR, § 170.232.
296-307-13035 Safe operation of equipment—Standards for pesticide handlers—40 CFR, § 170.234.
296-307-13040 Posted pesticide safety information—Standards for pesticide handlers—40 CFR, § 170.235.
296-307-13045 Personal protective equipment—Standards for pesticide handlers—40 CFR, § 170.240.
296-307-13050 Decontamination—Standards for pesticide handlers—40 CFR, § 170.250.
296-307-13055 Emergency assistance—Standards for pesticide handlers—40 CFR, § 170.260.

Part J
Pesticides Recordkeeping

296-307-145 Pesticides recordkeeping.
296-307-14505 What records must an employer keep for pesticide applications?
296-307-14510 Sample pesticide storage record.

Part J-1
Cholinesterase Monitoring

296-307-148 Scope and summary.
296-307-14805 Maintain handling records for covered pesticides.
296-307-14810 Implement a medical monitoring program.
296-307-14815 Identify a physician or licensed health care professional.
296-307-14820 Make cholinesterase testing available.
296-307-14825 Respond to depressed cholinesterase levels.
296-307-14830 Provide medical removal protection benefits.
296-307-14835 Maintain records.
296-307-14840 Provide training.
296-307-14845 Implementation plan.

Part K
Working Near Overhead Lines

296-307-150 Employees working near overhead lines.
296-307-15003 What does this section cover?
296-307-15006 What clearance and safeguards are required to protect employees working near overhead lines?
296-307-15009 What signs must an employer post to warn employees working near overhead lines?
296-307-15012 When must an employer notify the utility of employees working near overhead lines?

Part L
Temporary Worker Housing

296-307-161 Temporary worker housing.
296-307-16101 Purpose and applicability.
296-307-16103 Definitions.
296-307-16105 Operating license.
296-307-16110 Requirements for self-survey program.
296-307-16115 Maximum housing occupancy.
296-307-16120 Variance and procedure.
296-307-16125 Temporary worker housing sites.
296-307-16130 Water supply.
296-307-16135 Sewage disposal.
296-307-16140 Electricity and lighting.
296-307-16145 Building requirements and maintenance.
296-307-16150 Laundry facilities.
296-307-16155 Handwashing and bathing facilities.
296-307-16160 Toilet facilities.
296-307-16165 Cooking and food-handling facilities.
296-307-16170 Cots, beds, bedding, and personal storage.
296-307-16175 First aid and safety.
296-307-16180 Refuse disposal.
296-307-16185 Insect and rodent control.
296-307-16190 Disease prevention and control.

Part L-1
Cherry Harvest Camps

296-307-163 Cherry harvest camps.
296-307-16301 Purpose and applicability.
296-307-16303 Definitions.
296-307-16305 Technical assistance.
296-307-16310 Operating license.
296-307-16315 Maximum camp occupancy.
296-307-16320 Variance and procedure.
296-307-16325 Cherry harvest campsites.
296-307-16330 Water supply.
296-307-16335 Sewage disposal.
296-307-16340 Electricity and lighting.
296-307-16345 Tents.
296-307-16350 Recreational vehicles.
296-307-16355 Laundry facilities.
296-307-16360 Handwashing and bathing facilities.
296-307-16365 Toilet facilities.
296-307-16370 Cooking and food-handling facilities.
296-307-16375 Cots, beds, bedding, and personal storage.
296-307-16380 First aid and safety.
296-307-16385 Refuse disposal.
296-307-16390 Insect and rodent control.
296-307-16395 Disease prevention and control.

INDOOR OPERATIONS

Part M
Guarding Tools and Equipment;
Farm Shops; Materials Handling

296-307-18005 How must fan blades be guarded?
296-307-18010 How must constant-running drives be guarded?
296-307-18015 What training must an employer provide for employees who use agricultural equipment?
296-307-18020 What requirements apply to machine controls?
296-307-18025 How must steam pipes be guarded?
296-307-185 Guarding powered saws.
296-307-18503 What general requirements apply to powered saws?
296-307-18506 How must band saws be guarded?
296-307-18509 How must radial arm saws be guarded?
296-307-18512 How must table saws be guarded?
296-307-18515 How must circular fuel-wood saws be guarded?
296-307-190 Guarding bench grinders, abrasive wheels, and portable grinders.
296-307-19003 What definitions apply to this section?
296-307-19006 What rules apply to guarding abrasive wheels?
296-307-19009 What are the use, mounting, and guarding rules for abrasive wheels?
296-307-19012 What requirements apply to flanges?
296-307-19015 How must vertical portable grinders be guarded?
296-307-19018 How must other portable grinders be guarded?
296-307-195 What rules apply to grounding and "dead man" controls for hand-held portable power tools?
296-307-200 Compressed air.
296-307-20005 May compressed air be used for cleaning?
296-307-20010 What requirements apply to compressed air tools?
296-307-205 Guarding portable powered tools.
296-307-20505 What requirements apply to guarding portable powered tools?
296-307-20510 What requirements apply to switches and controls on portable powered tools?
296-307-20515 What requirements apply to pneumatic powered tools and hose?
296-307-220 Power lawnmowers.
296-307-22003 What definitions apply to this section?
296-307-22006 What are the general guarding requirements for power lawnmowers?
296-307-22009 What rules apply to walk-behind and riding rotary mowers?
296-307-22012 What rules apply to walk-behind rotary mowers?
296-307-22015 What rules apply to riding rotary mowers?
296-307-225 Jacks.
296-307-22503 What definitions apply to this section?
296-307-22506 How shall the rated load be marked on a jack?
296-307-22509 What rules apply to the operation and maintenance of jacks?
296-307-230 What are the general requirements for materials handling and storage?
296-307-232 What requirements apply to conveyors?

Part N
Sanitation for Indoor Workplaces

296-307-240 Sanitation for fixed, indoor workplaces.
296-307-24001 Must an employer comply with state health regulations?
296-307-24003 What does this section cover?
296-307-24006 What definitions apply to this section?
296-307-24009 What housekeeping requirements apply to fixed, indoor workplaces?
296-307-24012 How must the potable water supply be maintained?
296-307-24015 How must the nonpotable water supply be maintained?
296-307-24018 What toilet facilities must an employer provide?

296-307-24021 What washing facilities must an employer provide?
296-307-24024 What requirements apply to lavatories?
296-307-24027 When must an employer provide change rooms?
296-307-24030 What requirements apply to consumption of food and beverages in the workplace?
296-307-24033 How must waste be stored and removed?
296-307-24036 When must an employer have a vermin control program?

Part O
Walking Working Surfaces; Fixed Industrial Stairs; Aerial Manlifts

296-307-250 Walking working surfaces, elevated walkways, and platforms.
296-307-25003 What definitions apply to this section?
296-307-25006 When may railings be omitted?
296-307-25009 What protection must an employer provide for floor openings?
296-307-25012 What protection must an employer provide for wall openings and holes?
296-307-25015 What protection must an employer provide for open-sided floors, platforms, and runways?
296-307-25018 What requirements apply to stairway railings and guards?
296-307-25021 How must a standard railing be constructed?
296-307-25024 How must a stair railing be constructed?
296-307-25027 What are the requirements for railing dimensions?
296-307-25030 What requirements apply to toeboards?
296-307-25033 How must handrails and railings be constructed?
296-307-25036 What materials may be used for floor opening covers?
296-307-25039 How must skylight screens be constructed and mounted?
296-307-25042 What protection must an employer provide for wall openings?
296-307-260 Fixed industrial stairs.
296-307-26003 What does this section cover?
296-307-26006 What definitions apply to this section?
296-307-26009 Where are fixed stairs required?
296-307-26012 Where are spiral stairs prohibited?
296-307-26015 How strong must fixed stairs be?
296-307-26018 How wide must fixed stairs be?
296-307-26021 What angles may stairways be installed at?
296-307-26024 What requirements apply to stair treads?
296-307-26027 What requirements apply to the length of stairways?
296-307-26030 What requirements apply to railings and handrails on fixed stairs?
296-307-26033 What requirements apply to alternating tread-type stairs?
296-307-26036 What other requirements apply to fixed stairs?
296-307-270 Aerial manlift equipment.
296-307-27005 What requirements apply to aerial manlift equipment?
296-307-27010 What requirements apply to using aerial manlift equipment?

Part P
Guarding Power
Transmission Machinery

296-307-280 Guarding power transmission machinery.
296-307-28002 What power transmission belts are covered by this section?
296-307-28004 What does "guarded by location" mean?
296-307-28006 What general requirements apply to machine guarding?
296-307-28014 What requirements apply to prime-mover guards?
296-307-28016 What requirements apply to guarding shafting?
296-307-28018 What requirements apply to guarding pulleys?
296-307-28020 What requirements apply to guarding horizontal belt, rope, and chain drives?
296-307-28022 What requirements apply to guarding overhead horizontal belt, rope, and chain drives?
296-307-28024 What requirements apply to guarding vertical and inclined belts?
296-307-28026 What requirements apply to guarding cone-pulley belts?
296-307-28028 What requirements apply to guarding belt tighteners?
296-307-28030 What requirements apply to guarding gears, sprockets, and chains?
296-307-28032 What requirements apply to guarding friction drives?
296-307-28034 What requirements apply to guarding keys, set screws, and other projections?
296-307-28036 What requirements apply to guarding collars and couplings?
296-307-28038 Must self-lubricating bearings be used?
296-307-28040 What requirements apply to guarding clutches, cutoff couplings, and clutch pulleys?
296-307-28042 What requirements apply to guarding belt shifters, clutches, shippers, poles, perches, and fasteners?
296-307-28044 What materials must be used for standard guards?
296-307-28046 How must standard guards be manufactured?
296-307-28048 What requirements apply to disk, shield, and U-guards?
296-307-28050 What materials must be used for guards?
296-307-28052 When may wood guards be used?
296-307-28054 What materials may be used for guarding horizontal overhead belts?
296-307-28056 What clearance must be maintained between guards and power transmission machinery?
296-307-28058 How must overhead rope and chain-drive guards be constructed?
296-307-28060 What materials must be used for guardrails and toeboards?
296-307-28062 How must shafting be maintained?
296-307-28064 How must pulleys be maintained?
296-307-28066 How must belts be maintained?
296-307-28068 How must other equipment be maintained?
296-307-290 Auger conveying equipment.
296-307-29005 What requirements apply to auger conveying equipment?
296-307-29010 What other requirements apply to auger conveying equipment manufactured after October 25, 1976?
296-307-300 Guarding farmstead equipment.
296-307-30003 What does this section cover?
296-307-30006 How must power takeoff shafts of farmstead equipment be guarded?
296-307-30009 How must other power transmission components of farmstead equipment be guarded?
296-307-30012 How must functional components of farmstead equipment be guarded?
296-307-30015 When may guards be removed on farmstead equipment?
296-307-30018 What requirements apply to electrical control for maintaining and servicing farmstead equipment?
296-307-30021 What additional guarding requirements apply to farmstead equipment?

Part Q
Control of Hazardous
Energy (Lockout-tagout)

296-307-320 Control of hazardous energy (lockout-tagout).
296-307-32001 What does this section cover?
296-307-32003 When does this section not apply?
296-307-32005 What definitions apply to this section?
296-307-32007 What are the required elements of an energy control program?
296-307-32009 How does an employer determine when to use lockout vs. tagout?
296-307-32011 What requirements must be met to substitute tagout for lockout?
296-307-32013 What are the required elements of energy control procedures?
296-307-32015 What requirements apply to lockout and tagout devices and materials?
296-307-32017 How often must the energy control procedure be inspected?
296-307-32019 What general requirements apply to energy control program training and communication?
296-307-32021 What additional requirements apply to tagout training and communication?
296-307-32023 What requirements apply to employee retraining?
296-307-32025 What training records must an employer keep?
296-307-32027 Who may perform lockout or tagout?
296-307-32029 Who must be notified of lockout and tagout?
296-307-32031 What order of events must lockout or tagout procedures follow?
296-307-32033 What order of events must be followed to remove lockout or tagout devices?
296-307-32035 What requirements apply to testing and positioning machines and equipment?
296-307-32037 What requirements apply to outside servicing contractors?
296-307-32039 What requirements apply to group lockout or tagout?
296-307-32041 What requirements apply to lockout/tagout during shift changes?

Part R
Safety Color Coding; Accident Prevention Signs and Tags

296-307-330 Safety color coding; accident prevention signs and tags.
296-307-33001 What definitions apply to this section?
296-307-33003 What does red identify in safety color coding?
296-307-33005 What does yellow identify in safety color coding?
296-307-33007 When should signs and tags use "danger" versus "caution"?

296-307-33009 What are the design and color specifications for accident prevention signs?
296-307-33011 What are the proper uses of accident prevention tags?

Part S
Fire Protection and Ignition Sources; Exit Routes

296-307-340 Portable fire extinguishers.
296-307-34003 What does this section cover?
296-307-34006 Who is exempt from the requirements of this section?
296-307-34009 What general requirements apply to portable fire extinguishers?
296-307-34012 How should portable fire extinguishers be selected and distributed?
296-307-34015 What are the requirements for inspection, maintenance and testing of portable fire extinguishers?
296-307-34018 What requirements apply to hydrostatic testing?
296-307-34021 What are the training requirements for portable fire extinguishers?
296-307-345 Employee alarm systems.
296-307-34503 What does this section cover?
296-307-34506 What general requirements apply to employee alarm systems?
296-307-34509 What are the installation and restoration requirements for employee alarm systems?
296-307-34512 How must employee alarm systems be maintained and tested?
296-307-34515 Where must manually operated devices be located?
296-307-350 Exit routes.
296-307-35003 What does this section cover?
296-307-35006 What definitions apply to this section?
296-307-35009 What are the design requirements for exit routes?
296-307-35012 What are the operation and maintenance requirements for exit routes?
296-307-35015 What are the requirements for an emergency action plan?
296-307-35018 What are the requirements for a fire prevention plan?

Part T
Electrical

296-307-360 Electrical.
296-307-36005 What does this part cover?
296-307-36010 What definitions apply to this part?
296-307-362 General electrical requirements.
296-307-36203 What electrical equipment must be approved?
296-307-36206 How must electrical equipment safety be determined?
296-307-36209 What requirements apply to guarding live parts?
296-307-36212 What workspace must be provided?
296-307-36215 What general requirements apply to splices?
296-307-36218 What protection must be provided against combustible materials?
296-307-36221 How must electrical equipment be marked?
296-307-36224 How must disconnecting means be marked?
296-307-36227 What access and working space must be provided for electrical equipment of 600 volts, nominal, or less?
296-307-36230 What access and working space must be provided for electrical equipment over 600 volts, nominal?
296-307-364 Electrical installation and maintenance.
296-307-36403 How must flexible cords and cables be installed and maintained?
296-307-36406 How must attachment plugs and receptacles be installed and maintained?
296-307-36409 What must employees do when equipment causes electrical shock?
296-307-36412 What grounding and bonding requirements apply to equipment installation and maintenance?
296-307-36415 What requirements apply to disconnecting means?
296-307-36418 What requirements apply to identification and load rating of electrical equipment?
296-307-36421 How must equipment be installed in wet locations?
296-307-366 Wiring design and protection.
296-307-36603 How must grounded and grounding conductors be used and identified?
296-307-36606 What ampere rating must outlet devices have?
296-307-36609 What requirements apply to conductors?
296-307-36612 What design and protection requirements apply to service-entrances?
296-307-36615 What overcurrent protection must be provided?
296-307-36618 What premises wiring systems must be grounded?
296-307-36621 Must the conductor be grounded for AC premises wiring?
296-307-36624 What general requirements apply to grounding conductors?
296-307-36627 Must the path to ground be continuous?
296-307-36630 What supports, enclosures, and equipment must be grounded?
296-307-36633 How must fixed equipment be grounded?
296-307-36636 How must high voltage systems be grounded?
296-307-368 Wiring methods, components, and equipment for general use.
296-307-36803 Does this section apply to factory-assembled equipment?
296-307-36806 What wiring methods must be used for temporary wiring?
296-307-36809 When may cable trays be used?
296-307-36812 What requirements apply to open wiring on insulators?
296-307-36815 What wiring requirements apply to cabinets, boxes, and fittings?
296-307-36818 What requirements apply to switches?
296-307-36821 Where must switchboards and panelboards be located?
296-307-36824 When must conductors be insulated?
296-307-36827 When may flexible cords and cables be used?
296-307-36830 How must flexible cords and cables be identified, spliced, and terminated?
296-307-36833 What requirements apply to multiconductor portable cable?
296-307-36836 When may fixture wires be used?
296-307-36839 What requirements apply to wiring for lighting fixtures, lampholders, lamps, and receptacles?
296-307-36842 What requirements apply to wiring for receptacles, cord connectors, and attachment plugs (caps)?
296-307-36845 What requirements apply to wiring for appliances?
296-307-36848 What requirements apply to wiring for motors, motor circuits, and controllers?
296-307-36851 What requirements apply to wiring for transformers?
296-307-36854 What requirements apply to wiring for capacitors?
296-307-36857 How must storage batteries be ventilated?
296-307-36860 What other miscellaneous requirements apply to wiring methods?
296-307-370 Special purpose equipment and installations.
296-307-37003 What requirements apply to cranes, hoists, and runways?
296-307-37006 What requirements apply to elevators, dumbwaiters, escalators, and moving walks?
296-307-37009 What requirements apply to the disconnecting means for electric welders?
296-307-37012 What requirements apply to electrically driven or controlled irrigation machines?
296-307-372 Hazardous (classified) locations.
296-307-37203 What does this section cover?
296-307-37206 What classifications apply to this section?
296-307-37209 What equipment, wiring methods, and installations may be used in hazardous locations?
296-307-37212 How must conduit be installed in hazardous locations?
296-307-37215 Which equipment may be used in Division 1 and 2 locations?
296-307-37218 What requirements apply to motors and generators used in hazardous locations?
296-307-374 Special systems.
296-307-37403 What requirements apply to systems over 600 volts, nominal?
296-307-37406 What requirements apply to emergency power systems?
296-307-37409 How are Class 1, Class 2, and Class 3 remote control, signaling, and power-limited circuits classified?
296-307-37412 What requirements apply to fire protective signaling systems?
296-307-376 Working on or near exposed energized parts.
296-307-37603 What does this section cover?
296-307-37606 Who may work on energized parts?
296-307-37609 What requirements apply to working near low voltage lines?
296-307-37612 What requirements apply to qualified persons working near overhead lines?
296-307-37615 What requirements apply to vehicles and mechanical equipment near overhead lines?
296-307-37618 What lighting must be provided for employees working near exposed energized parts?
296-307-37621 What requirements apply to working near exposed energized parts in confined spaces?
296-307-37624 What housekeeping requirements apply to working near exposed energized parts?
296-307-37627 Who may defeat an electrical safety interlock?
296-307-378 Safety-related work practices.
296-307-37801 What does this section cover?
296-307-37803 How must employees be trained on safety practices?
296-307-37805 How must safety-related work practices be chosen and used?

296-307-37807 What work practices must be followed for work on exposed deenergized parts?
296-307-37809 Must an employer have a written copy of lockout-tagout procedures?
296-307-37811 What work practices must be followed for deenergizing equipment?
296-307-37813 How must locks and tags be applied?
296-307-37815 What work practices must be followed to verify deenergization?
296-307-37817 What work practices must be followed when reenergizing equipment?
296-307-37819 What safety-related work practices relate to portable electric equipment?
296-307-37821 What safety-related work practices relate to electric power and lighting circuits?
296-307-37823 What safety-related work practices relate to test instruments and equipment?
296-307-37825 What safety-related work practices relate to flammable materials?
296-307-380 Electrical protective equipment.
296-307-38003 How must protective equipment be used?
296-307-38006 What requirements apply to general protective equipment and tools?
296-307-38009 What manufacturing and marking requirements apply to electrical protective devices?
296-307-38012 What electrical requirements apply to electrical protective devices?
296-307-38015 What workmanship and finish requirements apply to electrical protective devices?
296-307-38018 How must electrical protective devices be maintained and used?

SPECIALIZED OPERATIONS

Part U-1
Hazardous Materials—Anhydrous Ammonia

296-307-400 Anhydrous ammonia.
296-307-40001 What does this section cover?
296-307-40003 What definitions apply to this section?
296-307-40005 What general requirements apply to the storage and handling of anhydrous ammonia?
296-307-40007 What requirements apply to systems mounted on farm wagons (implements of husbandry) for the transportation of ammonia?
296-307-40009 What requirements apply to systems mounted on farm wagons (implements of husbandry) for the application of ammonia?
296-307-40011 What requirements must approved anhydrous ammonia equipment meet?
296-307-40013 What requirements apply to the construction, original test, and requalification of nonrefrigerated containers?
296-307-40015 How must nonrefrigerated containers and systems (other than DOT containers) be marked?
296-307-40017 Where may anhydrous ammonia containers be located?
296-307-40019 What requirements apply to container accessories?
296-307-40021 What requirements apply to piping, tubing, and fittings?
296-307-40023 What specifications must hoses meet?
296-307-40025 What requirements apply to safety-relief devices?
296-307-40027 What emergency precautions are required when handling anhydrous ammonia?
296-307-40029 What requirements apply to filling densities?
296-307-40031 What requirements apply to the transfer of liquids?
296-307-40033 What requirements apply to tank car unloading points and operations?
296-307-40035 What requirements apply to the liquid-level gauging device?
296-307-40037 How should aboveground uninsulated containers be maintained?
296-307-40039 What requirements apply to electrical equipment and wiring?

Part U-2
Hazardous Materials—Liquified Petroleum Gas

296-307-410 Storage and handling of liquefied petroleum gases.
296-307-41001 What does this part cover?
296-307-41003 Which LP-gas installations are not covered by this part?
296-307-41005 What definitions apply to this part?
296-307-41007 When must LP-gas be odorized?
296-307-41009 Must LP-gas containers and equipment be approved?
296-307-41011 What construction and test requirements must containers meet?
296-307-41013 How must containers be welded?
296-307-41015 How must containers be marked?
296-307-41017 Where must containers be located?
296-307-41019 What requirements apply to valves and accessories?
296-307-41021 What requirements apply to piping, tubing, and fittings?
296-307-41023 What specifications must hoses meet?
296-307-41025 What requirements apply to safety devices?
296-307-41027 How must indirect fired vaporizers be constructed and installed?
296-307-41029 How must atmospheric vaporizers be constructed and installed?
296-307-41031 How must direct gas-fired vaporizers be constructed and installed?
296-307-41033 How must direct gas-fired tank heaters be constructed and installed?
296-307-41035 How must dehydrators be constructed and installed?
296-307-41037 What are the maximum filling densities?
296-307-41039 What requirements apply to LP-gas in buildings?
296-307-41041 What requirements apply to transfer of liquids?
296-307-41043 Must workers be trained?
296-307-41045 What fire protection must be provided for LP-gas installations?
296-307-41047 What electrical requirements apply to LP-gas installations?
296-307-41049 What requirements apply to liquid-level gauging devices?
296-307-41051 What requirements apply to appliances?
296-307-415 Cylinder systems.
296-307-41501 What does this section cover?
296-307-41503 What is a "cylinder system"?
296-307-41505 How must containers be marked for cylinder systems?
296-307-41507 What additional requirements apply to cylinder systems installed outdoors?
296-307-41509 What additional requirements apply to cylinder system installed indoors?
296-307-41511 What requirements apply to valves and accessories?
296-307-41513 What requirements apply to safety devices for cylinder systems?
296-307-41515 What other requirements apply to cylinder systems?
296-307-420 Systems using non-DOT containers.
296-307-42001 What does this section cover?
296-307-42003 How must non-DOT containers be designed and classified?
296-307-42005 What requirements apply to valves and accessories, filler pipes, and discharge pipes for non-DOT containers?
296-307-42007 What additional requirements apply to safety devices for non-DOT containers?
296-307-42009 When may non-DOT containers be reinstalled?
296-307-42011 What is the maximum capacity allowed for non-DOT containers?
296-307-42013 How must non-DOT containers be installed?
296-307-42015 How must non-DOT containers be protected?
296-307-42017 What requirements apply to non-DOT containers in industrial plants?
296-307-42019 What requirements apply to container-charging plants?
296-307-42021 What fire protection must be provided for non-DOT containers?
296-307-42023 What other requirements apply to non-DOT containers?
296-307-425 LP-gas as a motor fuel.
296-307-42501 What does this section cover?
296-307-42503 What general requirements apply to LP-gas used as a motor fuel?
296-307-42505 How must fuel containers be designed and classified?
296-307-42507 How must fuel containers be installed?
296-307-42509 What requirements apply to valves and accessories?
296-307-42511 What requirements apply to piping, tubing, and fittings?
296-307-42513 What requirements apply to safety devices?
296-307-42515 What requirements apply to vaporizers?
296-307-42517 What requirements apply to gas regulating and mixing equipment?
296-307-42519 What is the maximum container capacity allowed?
296-307-42521 What requirements apply to stationary engines used indoors?
296-307-42523 What requirements apply to portable engines used indoors?
296-307-42525 What requirements apply to industrial trucks used indoors?
296-307-42527 How must LP-gas-fueled vehicles be garaged?
296-307-430 Storage of containers awaiting use or resale.
296-307-43001 What does this section cover?
296-307-43003 What general requirements apply to storage of containers?
296-307-43005 How must containers be stored within buildings frequented by the public?

296-307-43007 How must containers be stored in buildings not frequented by the public?
296-307-43009 How must containers be stored within special buildings or rooms?
296-307-43011 How must containers be stored outdoors?
296-307-43013 What fire protection must be provided for stored containers?
296-307-435 LP-gas system installations on commercial vehicles.
296-307-43501 What does this section cover?
296-307-43503 How must containers be constructed?
296-307-43505 What is the maximum capacity allowed for LP-gas installations on commercial vehicles?
296-307-43507 Where must systems be located?
296-307-43509 What requirements apply to valves and accessories?
296-307-43511 What requirements apply to safety devices?
296-307-43513 What types of systems may be used on commercial vehicles?
296-307-43515 What requirements apply to enclosures and mounting?
296-307-43517 What requirements apply to piping, tubing, and fittings?
296-307-43519 What requirements apply to appliances?
296-307-43521 What general precautions must be followed for LP-gas system installations on commercial vehicles?
296-307-43523 How must containers be charged?
296-307-43525 What fire protection must be provided for mobile cook units?
296-307-440 LP-gas service stations.
296-307-44001 What does this section cover?
296-307-44003 How must storage containers be designed and classified?
296-307-44005 What requirements apply to valves and accessories?
296-307-44007 What requirements apply to safety devices?
296-307-44009 What is the maximum capacity allowed for containers?
296-307-44011 How must storage containers be installed?
296-307-44013 What equipment must be protected against tampering?
296-307-44015 What requirements apply to the transport truck unloading point?
296-307-44017 What requirements apply to piping, valves, and fittings?
296-307-44019 What requirements apply to pumps and accessory equipment?
296-307-44021 What requirements apply to LP-gas dispensing devices?
296-307-44023 Is smoking allowed at LP-gas service stations?
296-307-44025 What fire protection must be provided at LP-gas service stations?

Part U-3
Other Hazardous Materials
Dipping and Coating Operations (Dip Tanks)

296-307-445 Scope.
296-307-450 General requirements.

Construction

296-307-45005 Construct safe dip tanks.

Ventilation

296-307-45010 Provide proper ventilation for the vapor area.
296-307-45015 Take additional precautions if you recirculate ventilation system exhaust air into the workplace.
296-307-45020 Take additional precautions when using an exhaust hood.

Inspection

296-307-45025 Periodically inspect your dip tanks and associated equipment and correct any deficiencies.

First Aid

296-307-45030 Make sure employees working near dip tanks know appropriate first-aid procedures.

Cleaning

296-307-45035 Prepare dip tanks before cleaning.

Welding

296-307-45045 Protect employees during welding, burning, or other work using open flames.

Liquids Harmful to Skin

296-307-45050 Protect employees that use liquids that may burn, irritate, or otherwise harm the skin.
296-307-455 Additional requirements for dip tanks using flammable or combustible liquids.

Construction

296-307-45505 Include additional safeguards when constructing dip tanks.
296-307-45510 Provide overflow pipes.
296-307-45515 Provide bottom drains.

Fire Protection

296-307-45520 Provide fire protection in the vapor area.
296-307-45525 Provide additional fire protection for large dip tanks.

Electrical Wiring and Equipment and Sources of Ignition

296-307-45535 Prevent static electricity sparks or arcs when adding liquids to a dip tank.
296-307-45540 Control ignition sources.
296-307-45545 Provide safe electrical wiring and equipment where the liquid can drip or splash.

Housekeeping

296-307-45550 Keep the area around dip tanks clear of combustible material and properly dispose of waste.

Heating Liquid

296-307-45555 Make sure heating the liquid in your dip tanks does not cause a fire.

Heat Drying

296-307-45560 Make sure a heating system used for drying objects does not cause a fire.

Conveyors

296-307-45565 Make sure conveyor systems are safe.
296-307-460 Additional requirements for dip tanks used for specific processes.

Hardening or Tempering

296-307-46005 Meet specific requirements if you use a hardening or tempering tank.

Vapor Degreasing

296-307-46025 Provide additional safeguards for vapor degreasing tanks.

Spray Cleaning or Degreasing

296-307-46030 Control liquid spray over an open surface cleaning or degreasing tank.
296-307-465 Definitions.

Part V
Welding

296-307-475 Welding, cutting, and brazing.
296-307-47501 What definitions apply to this part?
296-307-480 Installation and operation of oxygen fuel gas systems for welding and cutting.
296-307-48001 What general requirements apply to oxygen fuel gas systems?
296-307-48003 What requirements apply to portable cylinders?
296-307-48005 What general requirements apply to storing compressed gas cylinders?
296-307-48007 How must fuel-gas cylinders be stored?
296-307-48009 How must oxygen cylinders be stored?
296-307-48011 What general operating procedures apply to working with cylinders and containers?
296-307-48013 What requirements apply to safety devices on cylinders?
296-307-48015 How must cylinders be transported?
296-307-48017 How must cylinders be handled?
296-307-48019 What requirements apply to cylinder valves?
296-307-48021 What requirements apply to cylinder regulators?
296-307-48023 What requirements apply to fuel-gas manifolds?
296-307-48025 What requirements apply to high pressure oxygen manifolds?
296-307-48027 What requirements apply to low pressure oxygen manifolds?
296-307-48029 What requirements apply to manifolding portable outlet headers?
296-307-48031 What operating procedures apply to cylinder manifolds?
296-307-48033 How must service piping systems be designed?
296-307-48035 What requirements apply to piping joints?
296-307-48037 How must service piping systems be installed?
296-307-48039 How must service piping systems be painted and marked?
296-307-48041 How must service piping systems be tested?

296-307-48043 How must equipment be installed?
296-307-48045 How must service piping systems be protected?
296-307-48047 What requirements apply to piping protective equipment?
296-307-48049 What requirements apply to station outlet protective equipment?
296-307-48051 What requirements apply to hose and hose connections?
296-307-48053 What requirements apply to pressure-reducing regulators?
296-307-485 Installation and operation of resistance welding equipment.
296-307-48501 What general requirements apply to resistance welding equipment?
296-307-48503 What requirements apply to portable welding machines?
296-307-48505 What requirements apply to flash welding equipment?
296-307-48507 Who must perform a job hazard analysis?
296-307-48509 What maintenance requirements apply to resistance welding equipment?
296-307-490 Application, installation, and operation of arc welding and cutting equipment.
296-307-49001 What environmental conditions must be taken into account when selecting arc welding equipment?
296-307-49003 What voltages must arc welding equipment use?
296-307-49005 How must arc welding equipment be designed?
296-307-49007 How must arc welding equipment be installed?
296-307-49009 How must arc welding equipment be grounded?
296-307-49011 What requirements apply to supply connections and conductors?
296-307-49013 How must arc welding equipment be operated?
296-307-49015 How must arc welding equipment be maintained?
296-307-495 Fire prevention and protection.
296-307-49501 What basic fire prevention precautions must be taken?
296-307-49503 What special fire prevention precautions must be taken?
296-307-49505 What precautions must be taken when welding or cutting containers?
296-307-49507 What precautions must be taken when welding in confined spaces?
296-307-500 Protection of employees.
296-307-50001 How must eye protection be selected?
296-307-50003 What specifications must eye protection meet?
296-307-50005 What protective clothing must welders wear?
296-307-50007 What other requirements apply to employee protection?
296-307-50009 What employee protection must be provided in confined spaces?
296-307-50011 What general requirements apply to welding ventilation?
296-307-50013 What ventilation must be provided for general welding and cutting?
296-307-50015 What requirements apply to local exhaust hoods and booths?
296-307-50017 What ventilation must be provided in confined spaces?
296-307-50019 What requirements apply to welding fluorine compounds?
296-307-50021 What requirements apply to welding zinc?
296-307-50023 What requirements apply to welding lead?
296-307-50025 What requirements apply to welding beryllium?
296-307-50027 What requirements apply to welding cadmium?
296-307-50029 What requirements apply to welding mercury?

Part W
Powered Industrial Trucks (Forklifts)

296-307-520 Powered industrial trucks (forklifts).
296-307-52001 What does this section cover?
296-307-52003 What is a "powered industrial truck"?
296-307-52005 What manufacturer's requirements apply to powered industrial trucks?
296-307-52007 What are the classifications of powered industrial trucks?
296-307-52009 What must a user consider before choosing a powered industrial truck?
296-307-52011 What requirements determine which trucks to use in specific hazardous environments?
296-307-52013 In what environments may converted trucks be used?
296-307-52015 What requirements apply to overhead safety guards?
296-307-52017 What requirements apply to load backrests?
296-307-52019 What requirements apply to fuel handling and storage?
296-307-52021 What requirements apply to lighting for operating areas?
296-307-52023 What level of carbon monoxide gas is allowed?
296-307-52025 What requirements apply to dockboards (bridge plates)?
296-307-52027 What rules apply to loading trucks, trailers, and railroad cars with powered industrial trucks?
296-307-52029 What are the operator training requirements for powered industrial trucks?
296-307-52030 Is there any additional (nonmandatory) information that may assist me with powered industrial truck operator training?
296-307-52031 What requirements apply to operating powered industrial trucks?
296-307-52033 When may trucks be used to open or close freight car doors?
296-307-52035 What requirements apply to lifting employees on the forks of trucks?
296-307-52037 What requirements apply to using platforms for hoisting employees?
296-307-52039 What requirements apply to traveling in a powered industrial truck?
296-307-52041 What requirements apply to traveling speeds of powered industrial trucks?
296-307-52043 What requirements apply to loading powered industrial trucks?
296-307-52045 What requirements apply to servicing powered industrial trucks?
296-307-52047 What requirements apply to maintaining powered industrial trucks?

Part X
Rim Wheel Servicing

296-307-530 Rim wheel servicing.
296-307-53001 What does this section cover?
296-307-53003 What definitions apply to rim wheel servicing?
296-307-53005 What training must an employer provide for employees who service rim wheels?
296-307-53007 What requirements apply to restraining devices?
296-307-53009 What other equipment must an employer provide for rim wheel servicing?
296-307-53011 What requirements apply to wheel component assembly?
296-307-53013 What are the safe operating procedures for servicing multipiece rim wheels?
296-307-53015 What are the safe operating procedures for servicing single-piece rim wheels?
296-307-53017 How can an employer order the OSHA charts?

Part Y
Occupational Health Standards

Part Y-1
Employer Chemical Hazard Communication

296-307-550 Employer chemical hazard communication—Introduction.
296-307-55005 Develop, implement, maintain, and make available a written Chemical Hazard Communication Program.
296-307-55010 Identify and list all the hazardous chemicals present in your workplace.
296-307-55015 Obtain and maintain material safety data sheets (MSDSs) for each hazardous chemical used.
296-307-55020 Make sure material safety data sheets are readily accessible to your employees.
296-307-55025 Label containers holding hazardous chemicals.
296-307-55030 Inform and train your employees about hazardous chemicals in your workplace.
296-307-55035 Follow these rules for laboratories using hazardous chemicals.
296-307-55040 Follow these rules for handling chemicals in factory-sealed containers.
296-307-55045 Translate certain chemical hazard communication documents upon request.
296-307-55050 Attempt to obtain a material safety data sheet (MSDS) upon request.
296-307-55055 Items or chemicals exempt from the rule, and exemptions from labeling.
296-307-55060 Definitions.

Part Y-2
Material Safety Data Sheets and Label Preparation

296-307-560 Scope.
296-307-56005 Hazard evaluation.
296-307-56010 Conduct complete hazard evaluations.
296-307-56015 Provide access to hazard evaluation procedures.
296-307-56020 Material safety data sheets.
296-307-56025 Develop or obtain material safety data sheets (MSDSs).
296-307-56030 Provide MSDSs for products shipped, transferred or sold over-the-counter.
296-307-56035 Follow-up if an MSDS is not provided.
296-307-56040 Labeling.
296-307-56045 Label containers of hazardous chemicals.
296-307-56050 Definitions.

296-307-570 Lighting rule.
296-307-57005 Provide and maintain adequate lighting.
296-307-590 Environmental tobacco smoke in the office.
296-307-59005 Control tobacco smoke in your building.
296-307-59010 Control tobacco smoke that comes in from the outside.

Part Y-3
Lighting

Part Y-4
Environmental Tobacco Smoke in the Office

Part Y-5
Respirators

296-307-594 Scope.
296-307-596 Respirator program administrator.
296-307-59605 Designate a program administrator.
296-307-598 Voluntary respirator use requirements.
296-307-59805 Make sure voluntary use of respirators is safe.
296-307-59810 Keep voluntary use program records.
296-307-600 Written respirator program and recordkeeping.
296-307-60005 Develop and maintain a written program.
296-307-60010 Keep respirator program records.
296-307-602 Respirator selection.
296-307-60205 Select and provide appropriate respirators.
296-307-604 Medical evaluations.
296-307-60405 Provide medical evaluations.
296-307-606 Fit testing.
296-307-60605 Conduct fit testing.
296-307-608 Training.
296-307-60805 Provide effective training.
296-307-610 Maintenance.
296-307-61005 Maintain respirators in a clean and reliable condition.
296-307-61010 Store respirators properly.
296-307-61015 Inspect and repair respirators.
296-307-612 Safe use and removal of respirators.
296-307-61205 Prevent sealing problems with tight-fitting respirators.
296-307-61210 Make sure employees leave the use area before removing respirators.
296-307-614 Standby requirements for immediately dangerous to life or health (IDLH) conditions.
296-307-61405 Provide standby assistance in immediately dangerous to life or health (IDLH) conditions.
296-307-616 Air quality for self-contained breathing apparatus (SCBA) and air-line respirators.
296-307-61605 Make sure breathing air and oxygen meet established specifications.
296-307-61610 Prevent conditions that could create a hazardous breathing air supply.
296-307-61615 Make sure compressors do not create a hazardous breathing air supply.
296-307-618 Labeling of air-purifying respirator filters, cartridges, and canisters.
296-307-61805 Keep labels readable on respirator filters, cartridges, and canisters during use.
296-307-620 Required procedures for respiratory protection program.
296-307-62005 Use this medical questionnaire for medical evaluations.
296-307-62010 Follow these fit-testing procedures for tight-fitting respirators.
296-307-62015 Follow procedures established for cleaning and disinfecting respirators.
296-307-62020 Follow procedures established for seal checking respirators.
296-307-622 Definitions.

Part Y-6
Respiratory Hazards

296-307-624 Scope.
296-307-626 Evaluate and control employee exposures.
296-307-62605 Identify and evaluate respiratory hazards.
296-307-62610 Control employee exposures.
296-307-62615 Use respirators.
296-307-62620 Notify employees.
296-307-62625 Permissible exposure limits of air contaminants.
296-307-628 Definitions.

Part Y-7
Hearing Loss Prevention (Noise)

296-307-630 Scope.

Hearing Loss Prevention Program

296-307-632 Summary.
296-307-63205 Conduct employee noise exposure monitoring.
296-307-63210 Control employee noise exposures that equal or exceed 90 dBA TWA_8.
296-307-63215 Make sure employees use hearing protection when their noise exposure equals or exceeds 85 dBA TWA_8.
296-307-63220 Make sure exposed employees receive training about noise and hearing protection.
296-307-63225 Make sure warning signs are posted for areas where noise levels equal or exceed 115 dBA.
296-307-63230 Arrange for oversight of audiometric testing.
296-307-63235 Identify and correct deficiencies in your hearing loss prevention program.
296-307-63240 Document your hearing loss prevention activities.

Noise Measurement and Computation

296-307-634 Summary.
296-307-63405 Make sure that noise-measuring equipment meets recognized standards.
296-307-63410 Measure employee noise exposure.
296-307-63415 Use these equations when estimating full-day noise exposure from sound level measurements.

Audiometric Testing

296-307-636 Summary.
296-307-63605 Provide audiometric testing at no cost to employees.
296-307-63610 Establish a baseline audiogram for each exposed employee.
296-307-63615 Conduct annual audiograms.
296-307-63620 Review audiograms that indicate a standard threshold shift.
296-307-63625 Keep the baseline audiogram without revision, unless annual audiograms indicate a persistent threshold shift or a significant improvement in hearing.
296-307-63630 Make sure a record is kept of audiometric tests.
296-307-63635 Make sure audiometric testing equipment meets these requirements.

Options to Audiometric Testing

296-307-638 Summary.
296-307-63805 Conduct hearing protection audits at least quarterly.
296-307-63810 Make sure staff conducting audits are properly trained.
296-307-63815 Assess the hearing protection used by each employee during audits.
296-307-63820 Document your hearing protection audits.

Third-party Audiometric Tests

296-307-63825 Make sure third-party hearing loss prevention programs meet the following requirements.
296-307-640 Noise definitions.

Part Y-8
Confined Spaces

296-307-642 Scope.
296-307-644 Summary.
296-307-64402 Identify permit-required confined spaces.
296-307-64404 Inform employees and control entry to permit-required confined spaces.
296-307-64406 Follow these requirements when you contract with another employer to enter your confined space.

Permit-required Confined Space Program

296-307-646 Summary.
296-307-64602 Develop a written permit-required confined space program.
296-307-64604 Meet these additional requirements if your employees enter another employer's confined space.

Employee Training

296-307-648 Summary.
296-307-64802 Provide employee training.
296-307-64804 Certify employee proficiency.

Permit Entry Procedures

296-307-650 Summary.
296-307-65002 Implement procedures for entry permits.
296-307-65004 Use an entry permit that contains all required information.
296-307-65006 Keep and review your entry permits.
296-307-65008 Prevent unauthorized entry.
296-307-65010 Provide, maintain, and use proper equipment.
296-307-65012 Evaluate and control hazards for safe entry.
296-307-65014 Make sure you have adequate rescue and emergency services available.

296-307-65016 Use nonentry rescue systems or methods whenever possible.
296-307-65018 Make sure entry supervisors perform their responsibilities and duties.
296-307-65020 Provide an attendant outside the permit-required confined space.
296-307-65022 Make sure entrants know the hazardous conditions and their duties.
296-307-65024 Implement procedures for ending entry.
296-307-652 Alternate entry procedures.
296-307-65202 Make sure the following conditions are met if using alternate entry procedures.
296-307-65204 Follow these alternate entry procedures for permit-required confined spaces.
296-307-654 Nonpermit confined spaces requirements.
296-307-65402 Follow these requirements when classifying a confined space as a nonpermit confined space.
296-307-65404 Reevaluate nonpermit confined spaces if hazards develop.
296-307-656 Definitions.

Part Y-10
Emergency Response

296-307-704 Scope.
296-307-70410 Planning.
296-307-70415 Training.
296-307-70420 Medical surveillance.
296-307-70425 Keep records.
296-307-70430 Incident requirements.
296-307-70435 Implement and maintain an incident command system (ICS).
296-307-70440 Prepare skilled support personnel.
296-307-70445 Make sure the incident commander oversees activities during the response.
296-307-70450 Use the buddy system in danger areas.
296-307-70455 Provide rescue and medical assistance.
296-307-70460 Personal protective equipment.
296-307-70465 Control hazards created by personal protective equipment (PPE).
296-307-70470 Use personal protective equipment (PPE) properly.
296-307-70475 Postemergency response.
296-307-70480 Definitions.

DISPOSITION OF SECTIONS FORMERLY CODIFIED IN THIS CHAPTER

296-307-03910 Make sure first-aid training contains required subjects. [Statutory Authority: RCW 49.17.010, [49.17].040, and [49.17].050. 01-17-033, § 296-307-03910, filed 8/8/01, effective 9/1/01.] Repealed by 04-07-160, filed 3/23/04, effective 5/1/04. Statutory Authority: RCW 49.17.010, 49.17.040, 49.17.050, and 49.17.060.

296-307-03915 Document your first-aid training. [Statutory Authority: RCW 49.17.010, [49.17].040, and [49.17].050. 01-17-033, § 296-307-03915, filed 8/8/01, effective 9/1/01.] Repealed by 04-07-160, filed 3/23/04, effective 5/1/04. Statutory Authority: RCW 49.17.010, 49.17.040, 49.17.050, and 49.17.060.

296-307-03925 Provide a first-aid station when required. [Statutory Authority: RCW 49.17.010, [49.17].040, and [49.17].050. 01-17-033, § 296-307-03925, filed 8/8/01, effective 9/1/01.] Repealed by 04-07-160, filed 3/23/04, effective 5/1/04. Statutory Authority: RCW 49.17.010, 49.17.040, 49.17.050, and 49.17.060.

296-307-042 Must an employer provide first-aid kits? [97-09-013, recodified as § 296-307-042, filed 4/7/97, effective 4/7/97. Statutory Authority: RCW 49.17.040, [49.17.]050 and [49.17.]060. 96-22-048, § 296-306A-042, filed 10/31/96, effective 12/1/96.] Repealed by 01-17-033, filed 8/8/01, effective 9/1/01. Statutory Authority: RCW 49.17.010, [49.17].040, and [49.17].050.

296-307-14520 What are the department's recommendations for cholinesterase monitoring? (Nonmandatory) [97-09-013, recodified as § 296-307-14520, filed 4/7/97, effective 4/7/97. Statutory Authority: RCW 49.17.040, [49.17.]050 and [49.17.]060. 96-22-048, § 296-306A-14520, filed 10/31/96, effective 12/1/96.] Repealed by 03-24-105, filed 12/3/03, effective 2/1/04. Statutory Authority: RCW 49.17.010, 49.17.040, 49.17.050, and 49.17.060.

296-307-160 Temporary labor camps. [97-09-013, recodified as § 296-307-160, filed 4/7/97, effective 4/7/97. Statutory Authority: RCW 49.17.040, [49.17.]050 and [49.17.]-060. 96-22-048, § 296-306A-160, filed 10/31/96, effective 12/1/96.] Repealed by 00-06-081, filed 3/1/00, effective 3/1/00. Statutory Authority: RCW 49.17.010, [49.17].040, and [49.17].050 and 1999 c 374.

296-307-16001 What requirements apply to camp sites? [Statutory Authority: RCW 49.17.040. 98-24-096, § 296-307-16001, filed 12/1/98, effective 3/1/99. 97-09-013, recodified as § 296-307-16001, filed 4/7/97, effective 4/7/97. Statutory Authority: RCW 49.17.040, [49.17.]050 and [49.17.]060. 96-22-048, § 296-306A-16001, filed 10/31/96, effective 12/1/96.] Repealed by 00-06-081, filed 3/1/00, effective 3/1/00. Statutory Authority: RCW 49.17.010, [49.17].040, and [49.17].-050 and 1999 c 374.

296-307-16003 How must camp shelters be constructed? [Statutory Authority: RCW 49.17.040. 98-24-096, § 296-307-16003, filed 12/1/98, effective 3/1/99. 97-09-013, recodified as § 296-307-16003, filed 4/7/97, effective 4/7/97. Statutory Authority: RCW 49.17.040, [49.17.]050 and [49.17.]060. 97-08-051A, § 296-306A-16003, filed 3/31/97, effective 5/1/97; 96-22-048, § 296-306A-16003, filed 10/31/96, effective 12/1/96.] Repealed by 00-06-081, filed 3/1/00, effective 3/1/00. Statutory Authority: RCW 49.17.010, [49.17].040, and [49.17].050 and 1999 c 374.

296-307-16004 What electricity must be provided for temporary labor camps? [Statutory Authority: RCW 49.17.040. 98-24-096, § 296-307-16004, filed 12/1/98, effective 3/1/99.] Repealed by 00-06-081, filed 3/1/00, effective 3/1/00. Statutory Authority: RCW 49.17.010, [49.17].040, and [49.17].050 and 1999 c 374.

296-307-16005 What requirements apply to the water supply? [97-09-013, recodified as § 296-307-16005, filed 4/7/97, effective 4/7/97. Statutory Authority: RCW 49.17.040, [49.17.]050 and [49.17.]060. 96-22-048, § 296-306A-16005, filed 10/31/96, effective 12/1/96.] Repealed by 00-06-081, filed 3/1/00, effective 3/1/00. Statutory Authority: RCW 49.17.010, [49.17].040, and [49.17].-050 and 1999 c 374.

296-307-16007 Must an employer provide toilet facilities for the camp? [97-09-013, recodified as § 296-307-16007, filed 4/7/97, effective 4/7/97. Statutory Authority: RCW 49.17.040, [49.17.]050 and [49.17.]060. 96-22-048, § 296-306A-16007, filed 10/31/96, effective 12/1/96.] Repealed by 00-06-081, filed 3/1/00, effective 3/1/00. Statutory Authority: RCW 49.17.010, [49.17].040, and [49.17].050 and 1999 c 374.

296-307-16009 Must sewer lines connect to public sewers? [97-09-013, recodified as § 296-307-16009, filed 4/7/97, effective 4/7/97. Statutory Authority: RCW 49.17.040, [49.17.]050 and [49.17.]060. 96-22-048, § 296-306A-16009, filed 10/31/96, effective 12/1/96.] Repealed by 00-06-081, filed 3/1/00, effective 3/1/00. Statutory Authority: RCW 49.17.010, [49.17].040, and [49.17].050 and 1999 c 374.

296-307-16011 What facilities must an employer provide for laundry, handwashing, and bathing? [97-09-013, recodified as § 296-307-16011, filed 4/7/97, effective 4/7/97. Statutory Authority: RCW 49.17.040, [49.17.]050 and [49.17.]060. 96-22-048, § 296-306A-16011, filed 10/31/96, effective 12/1/96.] Repealed by 00-06-081, filed 3/1/00, effective 3/1/00. Statutory Authority: RCW 49.17.010, [49.17].040, and [49.17].050 and 1999 c 374.

296-307-16013 What lighting must an employer provide in camp buildings? [Statutory Authority: RCW 49.17.040. 98-24-096, § 296-307-16013, filed 12/1/98, effective 3/1/99. 97-09-013, recodified as § 296-307-16013, filed 4/7/97, effective 4/7/97. Statutory Authority: RCW 49.17.040, [49.17.]050 and [49.17.]060. 97-08-051A, § 296-306A-16013, filed 3/31/97, effective 5/1/97; 96-22-048, § 296-306A-16013, filed 10/31/96, effective 12/1/96.] Repealed by 00-06-081, filed 3/1/00, effective 3/1/00. Statutory Authority: RCW 49.17.010, [49.17].040, and [49.17].050 and 1999 c 374.

296-307-16015 What requirements apply to refuse disposal? [97-09-013, recodified as § 296-307-16015, filed 4/7/97, effective 4/7/97. Statutory Authority: RCW 49.17.040, [49.17.]050 and [49.17.]060. 96-22-048, § 296-306A-16015, filed 10/31/96, effective 12/1/96.] Repealed by 00-06-081, filed 3/1/00, effective 3/1/00. Statutory Authority: RCW 49.17.010, [49.17].040, and [49.17].-050 and 1999 c 374.

296-307-16017 What cooking and food-handling facilities must be provided in temporary labor camps? [Statutory Authority: RCW 49.17.040. 98-24-096, § 296-307-16017, filed 12/1/98, effective 3/1/99. 97-09-013, recodified as § 296-307-16017, filed 4/7/97, effective 4/7/97. Statutory Authority: RCW 49.17.040, [49.17.]050 and [49.17.]-060. 96-22-048, § 296-306A-16017, filed 10/31/96, effective 12/1/96.] Repealed by 00-06-081, filed 3/1/00, effective 3/1/00. Statutory Authority: RCW 49.17.010, [49.17].040, and [49.17].050 and 1999 c 374.

296-307-16019 Must an employer provide insect and rodent control? [97-09-013, recodified as § 296-307-16019, filed 4/7/97, effective 4/7/97. Statutory Authority: RCW 49.17.040, [49.17.]050 and [49.17.]060. 96-22-048, § 296-306A-16019, filed 10/31/96, effective 12/1/96.] Repealed by 00-06-081, filed 3/1/00, effective 3/1/00. Statutory Authority: RCW 49.17.010, [49.17].040, and [49.17].050 and 1999 c 374.

296-307-16021 What first-aid facilities must be available in the camp? [97-09-013, recodified as § 296-307-16021, filed 4/7/97, effective 4/7/97. Statutory Authority: RCW 49.17.040, [49.17.]050 and [49.17.]060. 96-22-048, § 296-306A-16021, filed 10/31/96, effective 12/1/96.] Repealed by 00-06-081, filed 3/1/00, effective 3/1/00. Statutory Authority: RCW 49.17.010, [49.17].040, and [49.17].050 and 1999 c 374.

296-307-16023 When must an employer report communicable diseases in a camp? [97-09-013, recodified as § 296-307-16023, filed 4/7/97, effective 4/7/97. Statutory Authority: RCW 49.17.040, [49.17.]050 and [49.17.]060. 96-22-048, § 296-306A-16023, filed 10/31/96, effective 12/1/96.] Repealed by 00-06-081, filed 3/1/00, effective 3/1/00. Statutory Authority: RCW 49.17.010, [49.17].040, and [49.17].050 and 1999 c 374.

296-307-28008 What training must an employer provide for employees who use agricultural equipment? [97-09-013, recodified as § 296-307-28008, filed 4/7/97, effective 4/7/97. Statutory Authority: RCW 49.17.040, [49.17.]050 and [49.17.]060. 96-22-048, § 296-306A-28008, filed 10/31/96, effective 12/1/96.] Repealed by 98-24-096, filed 12/1/98, effective 3/1/99. Statutory Authority: RCW 49.17.040.

296-307-28010 What requirements apply to machine controls? [97-09-013, recodified as § 296-307-28010, filed 4/7/97, effective 4/7/97. Statutory Authority: RCW 49.17.040, [49.17.]050 and [49.17.]060. 96-22-048, § 296-306A-28010, filed 10/31/96, effective 12/1/96.] Repealed by 98-24-096, filed 12/1/98, effective 3/1/99. Statutory Authority: RCW 49.17.040.

296-307-28012 What requirements apply to guarding steam pipes? [97-09-013, recodified as § 296-307-28012, filed 4/7/97, effective 4/7/97. Statutory Authority: RCW 49.17.040, [49.17.]050 and [49.17.]060. 96-22-048, § 296-306A-28012, filed 10/31/96, effective 12/1/96.] Repealed by 98-24-096, filed 12/1/98, effective 3/1/99. Statutory Authority: RCW 49.17.040.

296-307-45001 What general requirements apply to hazardous materials and flammable and combustible liquids? [Statutory Authority: RCW 49.17.040. 98-24-096, § 296-307-45001, filed 12/1/98, effective 3/1/99. 97-09-013, recodified as § 296-307-45001, filed 4/7/97, effective 4/7/97. Statutory Authority: RCW 49.17.040, [49.17.]050 and [49.17.]060. 96-22-048, § 296-306A-45001, filed 10/31/96, effective 12/1/96.] Repealed by 03-10-068, filed 5/6/03, effective 8/1/03. Statutory Authority: RCW 49.17.010, 49.17.040, 49.17.050, and 49.17.060. Later promulgation, see WAC 296-307-445 through 296-307-465.

296-307-45003 What requirements apply to dip tanks containing flammable or combustible liquids? [Statutory Authority: RCW 49.17.040. 98-24-096, § 296-307-45003, filed 12/1/98, effective 3/1/99. 97-09-013, recodified as § 296-307-45003, filed 4/7/97, effective 4/7/97. Statutory Authority: RCW 49.17.040, [49.17.]050 and [49.17.]-060. 96-22-048, § 296-306A-45003, filed 10/31/96, effective 12/1/96.] Repealed by 03-10-068, filed 5/6/03, effective 8/1/03. Statutory Authority: RCW 49.17.010, 49.17.040, 49.17.050, and 49.17.060. Later promulgation, see WAC 296-307-445 through 296-307-465.

296-307-45007 What requirements must ventilation systems meet? [97-09-013, recodified as § 296-307-45007, filed 4/7/97, effective 4/7/97. Statutory Authority: RCW 49.17.040, [49.17.]050 and [49.17.]060. 96-22-048, § 296-306A-45007, filed 10/31/96, effective 12/1/96.] Repealed by 03-10-068, filed 5/6/03, effective 8/1/03. Statutory Authority: RCW 49.17.010, 49.17.040, 49.17.050, and 49.17.060. Later promulgation, see WAC 296-307-445 through 296-307-465.

296-307-45009 What general requirements apply to the construction of dip tanks? [Statutory Authority: RCW 49.17.040. 98-24-096, § 296-307-45009, filed 12/1/98, effective 3/1/99. 97-09-013, recodified as § 296-307-45009, filed 4/7/97, effective 4/7/97. Statutory Authority: RCW 49.17.040, [49.17.]050 and [49.17.]060. 96-22-048, § 296-306A-45009, filed 10/31/96, effective 12/1/96.] Repealed by 03-10-068, filed 5/6/03, effective 8/1/03. Statutory Authority: RCW 49.17.010, 49.17.040, 49.17.050, and 49.17.060. Later promulgation, see WAC 296-307-445 through 296-307-465.

296-307-45011 How must overflow pipes for dip tanks be constructed? [97-09-013, recodified as § 296-307-45011, filed 4/7/97, effective 4/7/97. Statutory Authority: RCW 49.17.040, [49.17.]050 and [49.17.]060. 96-22-048, § 296-306A-45011, filed 10/31/96, effective 12/1/96.] Repealed by 03-10-068, filed 5/6/03, effective 8/1/03. Statutory Authority: RCW 49.17.010, 49.17.040, 49.17.050, and 49.17.060. Later promulgation, see WAC 296-307-445 through 296-307-465.

296-307-45013 How must the bottom drains of dip tanks be constructed? [97-09-013, recodified as § 296-307-45013, filed 4/7/97, effective 4/7/97. Statutory Authority: RCW 49.17.040, [49.17.]050 and [49.17.]060. 96-22-048, § 296-306A-45013, filed 10/31/96, effective 12/1/96.] Repealed by 03-10-068, filed 5/6/03, effective 8/1/03. Statutory Authority: RCW 49.17.010, 49.17.-040, 49.17.050, and 49.17.060. Later promulgation, see WAC 296-307-445 through 296-307-465.

296-307-45017 What measures must an employer take to prevent hazards from electrical and other ignition sources? [Statutory Authority: RCW 49.17.040. 98-24-096, § 296-307-45017, filed 12/1/98, effective 3/1/99. 97-09-013, recodified as § 296-307-45017, filed 4/7/97, effective 4/7/97. Statutory Authority: RCW 49.17.040, [49.17.]-050 and [49.17.]060. 96-22-048, § 296-306A-45017, filed 10/31/96, effective 12/1/96.] Repealed by 03-10-068, filed 5/6/03, effective 8/1/03. Statutory Authority: RCW 49.17.010, 49.17.040, 49.17.050, and 49.17.060. Later promulgation, see WAC 296-307-445 through 296-307-465.

296-307-45019 How must dip tanks be operated and maintained? [97-09-013, recodified as § 296-307-45019, filed 4/7/97, effective 4/7/97. Statutory Authority: RCW 49.17.040, [49.17.]050 and [49.17.]060. 96-22-048, § 296-306A-45019, filed 10/31/96, effective 12/1/96.] Repealed by 03-10-068, filed 5/6/03, effective 8/1/03. Statutory Authority: RCW 49.17.010, 49.17.040, 49.17.050, and 49.17.060. Later promulgation, see WAC 296-307-445 through 296-307-465.

296-307-45021 What requirements must fire extinguishing systems meet? [Statutory Authority: RCW 49.17.040. 98-24-096, § 296-307-45021, filed 12/1/98, effective 3/1/99. 97-09-013, recodified as § 296-307-45021, filed 4/7/97, effective 4/7/97. Statutory Authority: RCW 49.17.040, [49.17.]050 and [49.17.]060. 96-22-048, § 296-306A-45021, filed 10/31/96, effective 12/1/96.] Repealed by 03-10-068, filed 5/6/03, effective 8/1/03. Statutory Authority: RCW 49.17.010, 49.17.040, 49.17.050, and 49.17.060. Later promulgation, see WAC 296-307-445 through 296-307-465.

296-307-45023 What requirements apply to hardening and tempering tanks? [Statutory Authority: RCW 49.17.040. 98-24-096, § 296-307-45023, filed 12/1/98, effective 3/1/99. 97-09-013, recodified as § 296-307-45023, filed 4/7/97, effective 4/7/97. Statutory Authority: RCW 49.17.040, [49.17.]050 and [49.17.]060. 96-22-048, § 296-306A-45023, filed 10/31/96, effective 12/1/96.] Repealed by 03-10-068, filed 5/6/03, effective 8/1/03. Statutory Authority: RCW 49.17.010, 49.17.040, 49.17.050, and 49.17.060. Later promulgation, see WAC 296-307-445 through 296-307-465.

296-307-45027 What requirements apply to electrostatic apparatus? [Statutory Authority: RCW 49.17.040. 98-24-096, § 296-307-45027, filed 12/1/98, effective 3/1/99. 97-09-013, recodified as § 296-307-45027, filed 4/7/97, effective 4/7/97. Statutory Authority: RCW 49.17.040, [49.17.]050 and [49.17.]060. 96-22-048, § 296-306A-45027, filed 10/31/96, effective 12/1/96.] Repealed by 03-10-068, filed 5/6/03, effective 8/1/03. Statutory

Authority: RCW 49.17.010, 49.17.040, 49.17.050, and 49.17.060. Later promulgation, see WAC 296-307-445 through 296-307-465.

296-307-45029 What requirements apply to roll coating applications? [97-09-013, recodified as § 296-307-45029, filed 4/7/97, effective 4/7/97. Statutory Authority: RCW 49.17.040, [49.17.]050 and [49.17.]060. 96-22-048, § 296-306A-45029, filed 10/31/96, effective 12/1/96.] Repealed by 03-10-068, filed 5/6/03, effective 8/1/03. Statutory Authority: RCW 49.17.010, 49.17.040, 49.17.050, and 49.17.060. Later promulgation, see WAC 296-307-445 through 296-307-465.

296-307-452 Scope. [Statutory Authority: RCW 49.17.010, [49.17].040, and [49.17].050. 02-11-141, § 296-307-452, filed 5/22/02, effective 10/1/02.] Repealed by 05-01-166, filed 12/21/04, effective 4/2/05. Statutory Authority: RCW 49.17.010, 49.17.040, 49.17.050, 49.17.060. Later promulgation, see chapter 296-307 WAC, Part Y-10.

296-307-45210 Planning. [Statutory Authority: RCW 49.17.010, [49.17].040, and [49.17].050. 02-11-141, § 296-307-45210, filed 5/22/02, effective 10/1/02.] Repealed by 05-01-166, filed 12/21/04, effective 4/2/05. Statutory Authority: RCW 49.17.010, 49.17.040, 49.17.050, 49.17.060. Later promulgation, see chapter 296-307 WAC, Part Y-10.

296-307-45220 Training. [Statutory Authority: RCW 49.17.010, [49.17].040, and [49.17].050. 02-11-141, § 296-307-45220, filed 5/22/02, effective 10/1/02.] Repealed by 05-01-166, filed 12/21/04, effective 4/2/05. Statutory Authority: RCW 49.17.010, 49.17.040, 49.17.050, 49.17.060. Later promulgation, see chapter 296-307 WAC, Part Y-10.

296-307-45230 Medical surveillance. [Statutory Authority: RCW 49.17.010, [49.17].040, and [49.17].050. 02-11-141, § 296-307-45230, filed 5/22/02, effective 10/1/02.] Repealed by 05-01-166, filed 12/21/04, effective 4/2/05. Statutory Authority: RCW 49.17.010, 49.17.040, 49.17.050, 49.17.060. Later promulgation, see chapter 296-307 WAC, Part Y-10.

296-307-45240 Keep records. [Statutory Authority: RCW 49.17.010, [49.17].040, and [49.17].050. 02-11-141, § 296-307-45240, filed 5/22/02, effective 10/1/02.] Repealed by 05-01-166, filed 12/21/04, effective 4/2/05. Statutory Authority: RCW 49.17.010, 49.17.040, 49.17.050, 49.17.060. Later promulgation, see chapter 296-307 WAC, Part Y-10.

296-307-45400 Incident requirements. [Statutory Authority: RCW 49.17.010, [49.17].040, and [49.17].050. 02-11-141, § 296-307-45400, filed 5/22/02, effective 10/1/02.] Repealed by 05-01-166, filed 12/21/04, effective 4/2/05. Statutory Authority: RCW 49.17.010, 49.17.040, 49.17.050, 49.17.060. Later promulgation, see chapter 296-307 WAC, Part Y-10.

296-307-45410 Implement and maintain an incident command system (ICS). [Statutory Authority: RCW 49.17.010, [49.17].-040, and [49.17].050. 02-11-141, § 296-307-45410, filed 5/22/02, effective 10/1/02.] Repealed by 05-01-166, filed 12/21/04, effective 4/2/05. Statutory Authority: RCW 49.17.010, 49.17.040, 49.17.050, 49.17.060. Later promulgation, see chapter 296-307 WAC, Part Y-10.

296-307-45420 Prepare skilled support personnel. [Statutory Authority: RCW 49.17.010, [49.17].040, and [49.17].050. 02-11-141, § 296-307-45420, filed 5/22/02, effective 10/1/02.] Repealed by 05-01-166, filed 12/21/04, effective 4/2/05. Statutory Authority: RCW 49.17.010, 49.17.040, 49.17.050, 49.17.060. Later promulgation, see chapter 296-307 WAC, Part Y-10.

296-307-45430 Make sure the incident commander oversees activities during the response. [Statutory Authority: RCW 49.17.010, [49.17].040, and [49.17].050. 02-11-141, § 296-307-45430, filed 5/22/02, effective 10/1/02.] Repealed by 05-01-166, filed 12/21/04, effective 4/2/05. Statutory Authority: RCW 49.17.010, 49.17.040, 49.17.050, 49.17.060. Later promulgation, see chapter 296-307 WAC, Part Y-10.

296-307-45440 Use the buddy system in danger areas. [Statutory Authority: RCW 49.17.010, [49.17].040, and [49.17].-050. 02-11-141, § 296-307-45440, filed 5/22/02, effective 10/1/02.] Repealed by 05-01-166, filed 12/21/04, effective 4/2/05. Statutory Authority: RCW 49.17.010, 49.17.040, 49.17.050, 49.17.060. Later promulgation, see chapter 296-307 WAC, Part Y-10.

296-307-45450 Provide rescue and medical assistance. [Statutory Authority: RCW 49.17.010, [49.17].040, and [49.17].-050. 02-11-141, § 296-307-45450, filed 5/22/02, effective 10/1/02.] Repealed by 05-01-166, filed 12/21/04, effective 4/2/05. Statutory Authority: RCW 49.17.010, 49.17.040, 49.17.050, 49.17.060. Later promulgation, see chapter 296-307 WAC, Part Y-10.

296-307-45600 Personal protective equipment. [Statutory Authority: RCW 49.17.010, [49.17].040, and [49.17].050. 02-11-141, § 296-307-45600, filed 5/22/02, effective 10/1/02.] Repealed by 05-01-166, filed 12/21/04, effective 4/2/05. Statutory Authority: RCW 49.17.010, 49.17.040, 49.17.050, 49.17.060. Later promulgation, see chapter 296-307 WAC, Part Y-10.

296-307-45610 Control hazards created by personal protective equipment (PPE). [Statutory Authority: RCW 49.17.010, [49.17].040, and [49.17].050. 02-11-141, § 296-307-45610, filed 5/22/02, effective 10/1/02.] Repealed by 05-01-166, filed 12/21/04, effective 4/2/05. Statutory Authority: RCW 49.17.010, 49.17.040, 49.17.050, 49.17.060. Later promulgation, see chapter 296-307 WAC, Part Y-10.

296-307-45620 Use personal protective equipment (PPE) properly. [Statutory Authority: RCW 49.17.010, [49.17].040, and [49.17].050. 02-11-141, § 296-307-45620, filed 5/22/02, effective 10/1/02.] Repealed by 05-01-166, filed 12/21/04, effective 4/2/05. Statutory Authority: RCW 49.17.010, 49.17.040, 49.17.050, 49.17.060. Later promulgation, see chapter 296-307 WAC, Part Y-10.

296-307-45800 Postemergency response. [Statutory Authority: RCW 49.17.010, [49.17].040, and [49.17].050. 02-11-141, § 296-307-45800, filed 5/22/02, effective 10/1/02.] Repealed by 05-01-166, filed 12/21/04, effective 4/2/05. Statutory Authority: RCW 49.17.010, 49.17.040, 49.17.050, 49.17.060. Later promulgation, see chapter 296-307 WAC, Part Y-10.

296-307-46000 Definitions. [Statutory Authority: RCW 49.17.010, [49.17].040, and [49.17].050. 02-11-141, § 296-307-46000, filed 5/22/02, effective 10/1/02.] Repealed by 05-01-166, filed 12/21/04, effective 4/2/05. Statutory Authority: RCW 49.17.010, 49.17.040, 49.17.050, 49.17.060. Later promulgation, see chapter 296-307 WAC, Part Y-10.

FIELD OPERATIONS AND GENERAL REQUIREMENTS

Part A
General and Educational Requirements

WAC 296-307-003 How is this chapter divided? The first three digits of the WAC (296) are the title. The second three digits are the chapter (307). The third number group is the section, which may have three or five digits. The fourth and fifth digits are treated as if there were a decimal point after the third digit.

For example: Section 330 of this chapter includes all five-digit sections whose number begins with 330.

Sections may be further divided as indicated below.

Title-Chapter-Section	296-307-330
	296-307-33003
Subsection	(1)
	(2)
Subdivision	(a)
	(b)
Item	(i)
	(ii)

Note: The chapter is also divided into "parts" according to subject, to make it easier for you to find the information you need.

[Statutory Authority: RCW 49.17.040. 98-24-096, § 296-307-003, filed 12/1/98, effective 3/1/99. 97-09-013, recodified as § 296-307-003, filed 4/7/97, effective 4/7/97. Statutory Authority: RCW 49.17.040, [49.17.]050 and [49.17.]060. 96-22-048, § 296-306A-003, filed 10/31/96, effective 12/1/96.]

WAC 296-307-006 What does this chapter cover? (1) Chapter 296-307 WAC applies to all agricultural operations with one or more employees covered by the Washington Industrial Safety and Health Act (WISHA), chapter 49.17 RCW.

"Agricultural operations" means farming and ranching, including, but not limited to:

(a) Cultivating and tilling the soil;

(b) Dairy farming;

(c) Producing, cultivating, growing, and harvesting of any agricultural or horticultural commodity;

(d) Raising livestock, bees, fur-bearing animals, or poultry; and

(e) Any practices performed by a farmer or on a farm, incident to or in connection with such farming operations, including but not limited to preparation for market and delivery to:

(i) Storage;

(ii) Market; or

(iii) Carriers for transportation to market. Agricultural operations include, but are not limited to, all employers in one or more of the following standard industrial classification (SIC) codes:

0111 Wheat
0115 Corn
0119 Cash grains not elsewhere classified, barley, peas, lentils, oats, etc.
0133 Sugar cane and sugar beets
0134 Irish potatoes—all potatoes except yams
0139 Field crops—hay, hops, mint, etc.
0161 Vegetables and melons, all inclusive
0171 All berry crops
0172 Grapes
0173 Tree nuts
0175 Deciduous tree fruits
0179 Tree fruits or tree nuts not elsewhere classified
0181 Ornamental floriculture and nursery products
0182 Food crops grown under cover
0191 General farms, primarily crops
0211 Beef cattle feedlots
0212 Beef cattle except feedlots—cattle ranches
0213 Hogs
0214 Sheep and goats
0219 General livestock except dairy and poultry
0241 Dairy farms
0251 Broiler, fryer, and roaster chickens
0252 Chicken eggs
0253 Turkeys and turkey eggs
0254 Poultry hatcheries
0259 Poultry and eggs not elsewhere classified
0271 Fur bearing animals and rabbits
0272 Horses
0273 Animal aquaculture
0279 Animal specialties not elsewhere classified
0291 General farms, primarily livestock and animal specialties
0711 Soil preparation services
0721 Crop planting, cultivating, and protecting
0722 Crop harvesting, primarily by machine
0751 Livestock services, except veterinary
0761 Farm labor contractors
0811 Timber tracts, Christmas tree growing, tree farms
0831 Forest nurseries
0851 Forestry services—reforestation

"Agricultural operations" do not include a farmer's processing for sale or handling for sale a commodity or product grown or produced by a person other than the farmer or the farmer's employees.

(2) Chapter 296-24 WAC does not apply to agricultural operations.

(3) All agricultural operations are also covered by the requirements of chapter 296-62 WAC, general occupational health rules.

(4) Occasionally, employees engaged in agricultural operations may also be covered by the safety standards of other industries. Following are excerpts from four industry standards that may help you determine if these other standards also apply:

Chapter 296-54 WAC Safety standards—Logging operations

WAC 296-54-501 Scope and application.

This standard establishes safety practices, means, methods and operations for all types of logging, regardless of the end use of the wood. These types of activities include, but are not limited to, pulpwood and timber harvesting and the logging of sawlogs, veneer bolts, poles, pilings and other forest products. The requirements herein contained do not apply to log handling at sawmills, plywood mills, pulp mills or other manufacturing operations governed by their own specific safety standards.

Chapter 296-99 WAC Safety standards for grain handling facilities

WAC 296-99-015 What grain-handling operations does this chapter cover?

(1) WAC 296-99-010 through 296-99-070 apply to:

- Dry grinding operations of soycake;
- Dry corn mills;
- Dust pelletizing plants;
- Feed mills;
- Flour mills;
- Flat storage structures;
- Grain elevators;
- Rice mills; and
- Soybean flaking operations.

(2) WAC 296-99-075, 296-99-080, and 296-99-085 apply only to grain elevators.

(3) Chapter 296-99 WAC does not apply to alfalfa storage or processing operations if they do not use grain products.

Chapter 296-78 WAC Safety standards for sawmills and woodworking operations

WAC 296-78-500 Foreword.

The chapter 296-78 WAC shall apply to and include safety requirements for all installations where the primary

manufacturing of wood building products takes place. The installations may be a permanent fixed establishment or a portable operation. These operations shall include but are not limited to log and lumber handling, sawing, trimming and planing, plywood or veneer manufacturing, canting operations, waste or residual handling, operation of dry kilns, finishing, shipping, storage, yard and yard equipment, and for power tools and affiliated equipment used in connection with such operation. WAC 296-78-450 shall apply to shake and shingle manufacturing. The provisions of WAC 296-78-500 through 296-78-84011 are also applicable in shake and shingle manufacturing except in instances of conflict with the requirements of WAC 296-78-705.

Chapter 296-155 WAC Safety standards for construction work

WAC 296-155-005 Purpose and scope.

The standards included in this chapter apply throughout the state of Washington, to any and all work places subject to the Washington Industrial Safety and Health Act (chapter 49.17 RCW), where construction, alteration, demolition, related inspection, and/or maintenance and repair work, including painting and decorating, is performed. These standards are minimum safety requirements with which all industries must comply when engaged in the above listed types of work.

(5) If rules in this chapter conflict with rules in another chapter of Title 296 WAC, this chapter prevails.

[Statutory Authority: RCW 49.17.040. 98-24-096, § 296-307-006, filed 12/1/98, effective 3/1/99. 97-09-013, recodified as § 296-307-006, filed 4/7/97, effective 4/7/97. Statutory Authority: RCW 49.17.040, [49.17.]050 and [49.17.]060. 96-22-048, § 296-306A-006, filed 10/31/96, effective 12/1/96.]

WAC 296-307-009 What definitions apply to this chapter? "Approved" means approved by the director of the department of labor and industries, or by another organization designated by the department. Also means listed or approved by a nationally recognized testing laboratory.

"Authorized person" means someone you have approved to perform specific duties or to be at a specific location on the job site.

"Biological agents" means organisms or their by-products.

"Chemical agents (airborne or contact)" means a chemical agent is any of the following:

• Airborne chemical agent which is any of the following:

– Dust - solid particles suspended in air, generated by handling, drilling, crushing, grinding, rapid impact, detonation, or decrepitation of organic or inorganic materials such as rock, ore, metal, coal, wood, grain, etc.

– Fume - solid particles suspended in air, generated by condensation from the gaseous state, generally after volatilization from molten metals, etc., and often accompanied by a chemical reaction such as oxidation.

– Gas - a normally formless fluid that can be changed to the liquid or solid state by the effect of increased pressure or decreased temperature or both.

– Mist - liquid droplets suspended in air, generated by condensation from the gaseous to the liquid state or by breaking up a liquid into a dispersed state, such as by splashing, foaming or atomizing.

– Vapor - the gaseous form of a substance that is normally in the solid or liquid state.

• Contact chemical agent which is any of the following:

– Corrosives - substances that in contact with living tissue cause destruction of the tissue by chemical action.

– Irritants - substances that on immediate, prolonged, or repeated contact with normal living tissue will induce a local inflammatory reaction.

– Toxicants - substances that have the inherent capacity to produce personal injury or illness to individuals by absorption through any body surface.

"Department" means the department of labor and industries. When this chapter refers to "we" or "us," it means labor and industries staff responsible for enforcing the Washington Industrial Safety and Health Act (WISHA).

"Director" means the director of the department of labor and industries, or a designated representative.

"Employee" means someone providing personal labor in the business of the employer, including anyone providing personal labor under an independent contract.

"Employer" means a business entity having one or more employees. Also, any person, partnership, or business entity with no employees but having industrial insurance coverage is both an employer and an employee. When this chapter refers to "you," it means the employer or a designated representative.

"Hazard" means a condition that can cause injury, death, or occupational disease.

"Listed" means listed by a nationally recognized testing laboratory.

"Must" means mandatory.

"Nationally recognized testing laboratory" See 29 CFR 1910.7 (federal OSHA requirements).

"Pesticide" means:

• Any substance intended to prevent, destroy, control, repel, or mitigate any insect, rodent, snail, slug, fungus, weed, and any other form of plant or animal life or virus, except virus on or in a living person or other animal which is normally considered to be a pest or which the director may declare to be a pest;

• Any substance or mixture of substances intended to be used as a plant regulator, defoliant or desiccant; and

• Any spray adjuvant, such as a wetting agent, spreading agent, deposit builder, adhesive, emulsifying agent, deflocculating agent, water modifier, or similar agent with or without toxic properties of its own, intended to be used with any pesticide as an aid to its application or effect, and sold in a package or container separate from that of the pesticide with which it is to be used.

"Safety factor" means the ratio of the ultimate breaking strength of a piece of material or equipment to the actual working stress or safe load when in use.

"Should" or **"may"** means recommended.

"Standard safeguard" means a device designed and constructed to remove a hazard related to the machine, appliance, tool, building, or equipment to which it is attached.

"Working day," for appeals and accident reporting, means a calendar day, except Saturdays, Sundays, and legal holidays as defined by RCW 1.16.050. To compute the time within which an act is to be completed, exclude the first working day and include the last.

[Statutory Authority: RCW 49.17.010, 49.17.040, 49.17.050, and 49.17.060. 03-10-068, § 296-307-009, filed 5/6/03, effective 8/1/03. Statutory Authority: RCW 49.17.040. 98-24-096, § 296-307-009, filed 12/1/98, effective 3/1/99. 97-09-013, recodified as § 296-307-009, filed 4/7/97, effective 4/7/97. Statutory Authority: RCW 49.17.040, [49.17.]050 and [49.17.]060. 96-22-048, § 296-306A-009, filed 10/31/96, effective 12/1/96.]

WAC 296-307-012 What does it mean when equipment is approved by a nonstate organization? Whenever the department requires that you have equipment or processes approved by an organization such as the Underwriters Laboratories (UL), the Bureau of Mines (MSHA), or the National Institute for Occupational Safety and Health (NIOSH), the approval of that organization is considered evidence of your compliance.

[97-09-013, recodified as § 296-307-012, filed 4/7/97, effective 4/7/97. Statutory Authority: RCW 49.17.040, [49.17.]050 and [49.17.]060. 96-22-048, § 296-306A-012, filed 10/31/96, effective 12/1/96.]

WAC 296-307-015 What must an employer do if a serious injury occurs? (1) You must report to us within eight hours of an incident that:

• Causes a fatal or possibly fatal injury;

• Involves acute injury or illness from exposure to pesticides; or

• Causes injury requiring in-patient hospitalization of any employee.

To report, you must contact your nearest labor and industries office by phone or in person, or call the OSHA toll-free hotline, 1-800-321-6742.

EXCEPTION: If you do not learn of a reportable incident when it happens, you must report it within eight hours of learning about the incident.

(a) Your report must include:

• Establishment name;

• Location of the incident;

• Time of the incident;

• Number of fatalities, hospitalized employees, or pesticide exposures;

• Contact person;

• Phone number; and

• Brief description of the incident.

(b) Fatalities or hospitalizations that occur within thirty days of an incident must also be reported.

(2) If a department investigator asks for assistance, you must assign the employees that the investigator requests.

(3) Do not move any equipment involved in the incident until we complete an investigation.

EXCEPTION: You may move equipment to prevent additional incidents, or to remove the victim.

[Statutory Authority: RCW 49.17.040. 98-24-096, § 296-307-015, filed 12/1/98, effective 3/1/99. 97-09-013, recodified as § 296-307-015, filed 4/7/97, effective 4/7/97. Statutory Authority: RCW 49.17.040, [49.17.]050 and [49.17.]060. 96-22-048, § 296-306A-015, filed 10/31/96, effective 12/1/96.]

WAC 296-307-018 What are the employer's responsibilities?

You must:

(1) Provide a safe and healthful working environment.

(2) Ensure that employees do not use defective or unsafe tools and equipment, including tools and equipment that may be furnished by the employee.

(3) Implement a written accident prevention program as required by these standards.

(4) Implement a hazard communication program as required by WAC 296-307-550.

(5) Establish a system for reporting and recording accidents on the OSHA 200 log. (See chapter 296-27 WAC.)

(6) Provide safety education and training programs.

(7) Implement the requirements of WAC 296-62-074 through 296-62-07451 to ensure the safety of employees who are exposed to cadmium in the workplace.

(8) Implement the requirements of WAC 296-307-642 through 296-307-656 to ensure the safety of employees who are exposed to confined spaces in the workplace.

(9) Control chemical agents.

You must:

• Control chemical agents in a manner that they will not present a hazard to your workers; or

• Protect workers from the hazard of contact with, or exposure to, chemical agents.

Reference: Pesticides are chemical agents and are covered by chapter 296-307 WAC Part I, Pesticides (worker protection standard). Pesticides may also be covered by WAC 296-307-594, Respirators.

(10) Protect employees from biological agents.

You must:

• Protect employees from exposure to hazardous concentrations of biological agents that may result from processing, handling or using materials or waste.

Note: Examples of biological agents include:
– Animals or animal waste
– Body fluids
– Biological agents in a medical research lab
– Mold or mildew.

[Statutory Authority: RCW 49.17.010, 49.17.040, 49.17.050, 49.17.060. 05-01-166, § 296-307-018, filed 12/21/04, effective 4/2/05; 03-10-068, § 296-307-018, filed 5/6/03, effective 8/1/03. Statutory Authority: RCW 49.17.010, [49.17].040, and [49.17].050. 01-17-033, § 296-307-018, filed 8/8/01, effective 9/1/01. Statutory Authority: RCW 49.17.040. 98-24-096, § 296-307-018, filed 12/1/98, effective 3/1/99. 97-09-013, recodified as § 296-307-018, filed 4/7/97, effective 4/7/97. Statutory Authority: RCW 49.17.040, [49.17.]050 and [49.17.]060. 96-22-048, § 296-306A-018, filed 10/31/96, effective 12/1/96.]

WAC 296-307-021 What are the employee's responsibilities? (1) Employees must cooperate with you and other employees in efforts to eliminate accidents.

(2) Employees must be informed of and observe all safe practices.

(3) Employees must notify you of unsafe conditions of equipment or workplaces.

(4) Employees must use all required safety devices and protective equipment.

(5) Employees must not willfully damage personal protective equipment.

(6) Each employee must promptly report any job-related injury or illness to his or her immediate supervisor, regardless of the degree of severity.

(7) Employees must not engage in any activity unrelated to work that may cause injury to other employees during the course of performing work assignments.

(8) Employees must attend any required training and/or orientation programs designed to increase their competency in occupational safety and health.

(9) Employees must not report to work under the influence of alcohol or controlled substances. Alcohol or controlled substances must not be brought on the worksite.

[97-09-013, recodified as § 296-307-021, filed 4/7/97, effective 4/7/97. Statutory Authority: RCW 49.17.040, [49.17.]050 and [49.17.]060. 96-22-048, § 296-306A-021, filed 10/31/96, effective 12/1/96.]

WAC 296-307-024 How does an employer apply for a variance? (1) If you find that it is impractical for you to comply with specific requirements of this standard, we may permit a variation from the requirements. However, you must still provide equal protection by substitute means and comply with the requirements of chapter 49.17 RCW and chapter 296-350 WAC, variances.

(2) On the variance application you must certify that you have posted a copy of the written application in a place reasonably accessible to your employees. You must also mail a copy of the application to any authorized employee representative. The notice must advise employees of their right to request us to conduct a hearing on the variance application. You must notify employees before you apply.

Note: To request a permanent or temporary variance, you may write to: Department of Labor and Industries, WISHA Services, PO Box 44648, Olympia, WA 98504-4648. We will mail you an application form and instruction sheet. We will also send a copy of chapter 296-350 WAC, Variances, if you request it.

[Statutory Authority: RCW 49.17.040. 98-24-096, § 296-307-024, filed 12/1/98, effective 3/1/99. 97-09-013, recodified as § 296-307-024, filed 4/7/97, effective 4/7/97. Statutory Authority: RCW 49.17.040, [49.17.]050 and [49.17.]060. 96-22-048, § 296-306A-024, filed 10/31/96, effective 12/1/96.]

Part B
Accident Prevention Program; First-aid Requirements; Safe Place Standard

WAC 296-307-030 What are the required elements of an accident prevention program? (1) You must instruct all employees in safe working practices at the beginning of employment. Your instruction must be tailored to the types of hazards to which employees are exposed.

(2) You must develop a written accident prevention program tailored to the needs of your agricultural operation and to the types of hazards involved.

(3) Your accident prevention program must contain at least the following elements:

(a) How, when, and where to report injuries and illnesses, and the location of first-aid facilities.

(b) How to report unsafe conditions and practices.

(c) The use and care of personal protective equipment.

(d) What to do in emergencies. See WAC 296-307-35015 for emergency action plan requirements.

(e) Identification of hazardous chemicals or materials and the instruction for their safe use.

(f) An on-the-job review of the practices necessary to perform job assignments in a safe and healthful manner.

(4) At least once a month, you must conduct a walk-around safety inspection of active job sites, the materials and equipment involved, and operating procedures. A representative chosen by employees must be invited and allowed to accompany you.

[Statutory Authority: RCW 49.17.040. 98-24-096, § 296-307-030, filed 12/1/98, effective 3/1/99. 97-09-013, recodified as § 296-307-030, filed 4/7/97, effective 4/7/97. Statutory Authority: RCW 49.17.040, [49.17.]050 and [49.17.]060. 96-22-048, § 296-306A-030, filed 10/31/96, effective 12/1/96.]

WAC 296-307-033 How often must safety meetings be held? (1) Foreman-crew safety meetings must be held at least monthly or whenever there are significant changes in job assignments. These meetings must be tailored to the particular operation or activity occurring at the time.

(2) The meeting minutes must document subjects discussed and attendance.

(3) Short-term operations that last less than one month, such as harvesting, do not require foreman-crew safety meetings but only require initial safety orientation for the operations.

(4) You must maintain copies of the minutes of each foreman-crew safety meeting at the location where the majority of employees report to work each day.

(5) You must retain minutes of foreman-crew safety meetings for one year and be able to show us copies if we ask to see them.

[97-09-013, recodified as § 296-307-033, filed 4/7/97, effective 4/7/97. Statutory Authority: RCW 49.17.040, [49.17.]050 and [49.17.]060. 96-22-048, § 296-306A-033, filed 10/31/96, effective 12/1/96.]

WAC 296-307-036 What items go on the safety bulletin board? (1) You must provide a bulletin board or posting area large enough to display the required safety and health poster, "Job Safety and Health Protection" (F416-081-000), and other safety education material.

(2) The bulletin board must be readily visible in a place where employees gather during some part of the work day. (For example, at the entrance to a field, a parking area, or in a farm building.)

(3) If for any reason any employee is unable to read the notices posted on the bulletin board, you must ensure that the message of the required poster explaining employee rights is communicated to the employee in terms he or she understands. This same requirement applies to variance applications, denials or grants, and to any other notice affecting the employee's rights under WISHA.

(4) Posting must be in the employees' language.

[97-09-013, recodified as § 296-307-036, filed 4/7/97, effective 4/7/97. Statutory Authority: RCW 49.17.040, [49.17.]050 and [49.17.]060. 96-22-048, § 296-306A-036, filed 10/31/96, effective 12/1/96.]

WAC 296-307-039 First-aid rule summary. Your responsibility: Make sure first-aid trained personnel are available to provide quick and effective first aid.

You must:

Make sure that first-aid trained personnel are available to provide quick and effective first aid.

WAC 296-307-03905.

Make sure appropriate first-aid supplies are readily available.

WAC 296-307-03920.

Note:
- Employers who require their employees to provide first aid must comply with the bloodborne pathogen rule, chapter 296-823 WAC .
- Additional requirements relating to first aid are also located in the following sections:
  - WAC 296-307-07013(12), What rules apply to vehicles used to transport employees?
  - WAC 296-307-16175, First-aid requirements for operators of temporary worker housing.
  - WAC 296-307-16380, First-aid requirements for operators of cherry harvest camps.

Definitions:

First aid: The extent of treatment you would expect from a person trained in basic first aid, using supplies from a first-aid kit.

Emergency medical service: Medical treatment and care given at the scene of any medical emergency or while transporting any victim to a medical facility.

You can get copies of these rules by calling 1-800-4BE SAFE (1-800-423-7233), or by going to http://www.lni.wa.gov.

[Statutory Authority: RCW 49.17.010, 49.17.040, 49.17.050, 49.17.060. 05-01-166, § 296-307-039, filed 12/21/04, effective 4/2/05; 04-07-160, § 296-307-039, filed 3/23/04, effective 5/1/04. Statutory Authority: RCW 49.17.010, [49.17].040, [49.17].050. 02-12-098, § 296-307-039, filed 6/5/02, effective 8/1/02; 01-17-033, § 296-307-039, filed 8/8/01, effective 9/1/01. 97-09-013, recodified as § 296-307-039, filed 4/7/97, effective 4/7/97. Statutory Authority: RCW 49.17.040, [49.17.]050 and [49.17.]060. 96-22-048, § 296-306A-039, filed 10/31/96, effective 12/1/96.]

WAC 296-307-03905 Make sure that first-aid trained personnel are available to provide quick and effective first aid.

You must:

Comply with the first-aid training requirements of 29 CFR 1910.151(b) which states:

"In the absence of an infirmary, clinic, or hospital in near proximity to the workplace which is used for the treatment of all injured employees, a person or persons shall be adequately trained to render first aid."

[Statutory Authority: RCW 49.17.010, 49.17.040, 49.17.050, and 49.17.060. 04-07-160, § 296-307-03905, filed 3/23/04, effective 5/1/04. Statutory Authority: RCW 49.17.010, [49.17].040, and [49.17].050. 01-17-033, § 296-307-03905, filed 8/8/01, effective 9/1/01.]

WAC 296-307-03920 Make sure appropriate first-aid supplies are readily available. You must:

• Make sure first-aid supplies are readily available. (See first-aid kit table.)

• Make sure first-aid supplies at your workplace are appropriate to:

- Your occupational setting.

– The response time of your emergency medical services.

First-Aid Kit Table

Number of employees normally assigned to worksite	Minimum first-aid supplies required at worksite
1 - 15 Employees	1 First-aid kit
16 - 30 Employees	2 First-aid kits
31 - 50 Employees	3 First-aid kits

Note:
- First-aid kits from your local retailer or safety supplier should be adequate for most nonindustrial employers.
- The following is a list of suggested items for your first-aid kit:
  – 1 absorbent compress, 4 x 8 inches
  – 16 adhesive bandages, 1 x 3 inches
  – 1 adhesive tape, 5 yards long
  – 10 antiseptic single-use packages, 0.5 g application
  – 6 burn treatment single-use packages, 0.5 g application
  – 1 eye covering (for two eyes)
  – 1 eye wash, 1 fluid ounce
  – 4 sterile pads, 3 x 3 inches
  – 2 pair of medical exam gloves
  – 1 triangular bandage, 39 x 39 x 55 inches

  Optional first-aid kit contents
  – Bandage compresses, 2 x 2 inches, 3 x 3 inches and 5 x 5 inches
  – Self-activating cold packs, 4 x 5 inches
  – Roller bandages, 6 yards long
  – Mouth-to-mouth barrier for CPR
- Kits should be checked at least weekly to ensure adequate number of needed items are available.
- Kits may be carried in any motor vehicle that is used near the crew.

You must:

• Make sure that first-aid supplies are:

- Easily accessible to all your employees.

- Stored in containers that protect them from damage, deterioration, or contamination. Containers must be clearly marked, not locked, and may be sealed.

- Able to be moved to the location of an injured or acutely ill worker.

[Statutory Authority: RCW 49.17.010, 49.17.040, 49.17.050, 49.17.060. 05-01-166, § 296-307-03920, filed 12/21/04, effective 4/2/05. Statutory Authority: RCW 49.17.010, [49.17].040, and [49.17].050. 01-17-033, § 296-307-03920, filed 8/8/01, effective 9/1/01.]

WAC 296-307-03930 Make sure emergency washing facilities are functional and readily accessible.

You must:

• Provide an emergency shower:

– When there is potential for major portions of an employee's body to contact corrosives, strong irritants, or toxic chemicals

– That delivers water to cascade over the user's entire body at a minimum rate of 20 gallons (75 liters) per minute for fifteen minutes or more.

• Provide an emergency eyewash:

– When there is potential for an employee's eyes to be exposed to corrosives, strong irritants, or toxic chemicals

– That irrigates and flushes both eyes simultaneously while the user holds their eyes open

– With an on-off valve that activates in one second or less and remains on without user assistance until intentionally turned off

– That delivers at least 0.4 gallons (1.5 liters) of water per minute for fifteen minutes or more.

Note: Chemicals that require emergency washing facilities:
- You can determine whether chemicals in your workplace require emergency washing facilities by looking at the material safety data sheet (MSDS) or similar documents. The MSDS contains information about first-aid requirements and emergency flushing of skin or eyes
- For chemicals developed in the workplace, the following resources provide information about first-aid requirements:
  – NIOSH Pocket Guide to Chemical Hazards
  .*DHHS (NIOSH) Publication No. 97-140
  .*http://www.cdc.gov/niosh/npg/ggdstart.html
  – Threshold Limit Values for Chemical Substances and Physical Agents American Conference of Governmental Industrial Hygienists (ACGIH).

You must:

• Make sure emergency washing facilities:

– Are located so that it takes no more than ten seconds to reach

– Are kept free of obstacles blocking their use

– Function correctly

– Provide the quality and quantity of water that is satisfactory for emergency washing purposes.

Note: • If water in emergency washing facilities is allowed to freeze, they will not function correctly. Precautions need to be taken to prevent this from happening
• The travel distance to an emergency washing facility should be no more than fifty feet (15.25 meters)
• For further information on the design, installation, and maintenance of emergency washing facilities, see American National Standards Institute (ANSI) publication Z358.1 - 1998, *Emergency Eyewash and Shower Equipment*. Emergency washing facilities that are designed to meet ANSI Z358.1 - 1998 also meet the requirements of this standard. The ANSI standard can be obtained from the American National Standards Institute, 1430 Broadway, New York, New York 10018.

Reference: • Training in the location and use of your emergency washing facilities is required under the employer chemical hazard communication rule, WAC 296-307-550, and the accident prevention program rule, WAC 296-307-030.

[Statutory Authority: RCW 49.17.010, 49.17.040, 49.17.050, and 49.17.060. 03-10-068, § 296-307-03930, filed 5/6/03, effective 8/1/03.]

WAC 296-307-03935 Inspect and activate your emergency washing facilities.

You must:

• Make sure all plumbed emergency washing facilities are inspected once a year to make sure they function correctly.

Note: Inspections should include:
• Examination of the piping
• Making sure that water is available at the appropriate temperature and quality
• Activation to check that the valves and other hardware work properly
• Checking the water flow rate.

You must:

• Make sure plumbed emergency eyewashes and hand-held drench hoses are activated weekly to check the proper functioning of the valves, hardware, and availability of water

• Make sure all self-contained eyewash equipment and personal eyewash units are inspected and maintained according to manufacturer instructions.

– Inspections to check proper operation must be done once a year

– Sealed personal eyewashes must be replaced after the manufacturer's expiration date.

Note: Most manufacturers recommend replacing fluid in open self-contained eyewashes every six months. The period for sealed containers is typically two years.

[Statutory Authority: RCW 49.17.010, 49.17.040, 49.17.050, and 49.17.060. 03-10-068, § 296-307-03935, filed 5/6/03, effective 8/1/03.]

WAC 296-307-03940 Make sure supplemental flushing equipment provides sufficient water.

Note: Supplemental flushing equipment cannot be used in place of required emergency showers or eyewashes.

You must:

• Make sure hand-held drench hoses deliver at least 3.0 gallons (11.4 liters) of water per minute for fifteen minutes or more.

Note: Why use a drench hose? A drench hose is useful when:
• The spill is small and does not require an emergency shower
• Used with a shower for local rinsing, particularly on the lower extremities.

You must:

• Make sure personal eyewash equipment delivers only clean water or other medically approved eye flushing solutions.

[Statutory Authority: RCW 49.17.010, 49.17.040, 49.17.050, and 49.17.060. 03-10-068, § 296-307-03940, filed 5/6/03, effective 8/1/03.]

WAC 296-307-03945 Definitions.

Corrosive

As used in first aid, WAC 296-307-039, is a substance that causes destruction of living tissue by chemical action, including acids with a pH of 2.5 or below or caustics with a pH of 11.0 or above.

Emergency washing facilities

Emergency washing facilities are emergency showers, eyewashes, eye/face washes, hand-held drench hoses, or other similar units.

Hand-held drench hoses

Hand-held drench hoses are single-headed emergency washing devices connected to a flexible hose that can be used to irrigate and flush the face or other body parts.

Personal eyewash units

Personal eyewash units are portable, supplementary units that support plumbed units or self-contained units, or both, by delivering immediate flushing for less than fifteen minutes.

Strong irritant

As used in first aid, WAC 296-307-039, is a chemical that is not corrosive, but causes a strong, temporary inflammatory effect on living tissue by chemical action at the site of contact.

Toxic chemical

As used in first aid, WAC 296-307-039, is a chemical that produces serious injury or illness when absorbed through any body surface.

[Statutory Authority: RCW 49.17.010, 49.17.040, 49.17.050, and 49.17.060. 03-10-068, § 296-307-03945, filed 5/6/03, effective 8/1/03.]

WAC 296-307-045 What are the requirements of the safe place standard? (1) You must furnish to each employee a place of employment free from recognized controllable hazards likely to cause serious injury or death.

(2) You must furnish and require employees to use any safety devices and safeguards that are needed to control recognized hazards. All agricultural methods, operations, and processes must be designed to promote the safety and health of employees.

(3) You must not require an employee to engage in any duty or enter any place that is not safe.

(4) The following are prohibited:

(a) Removing, displacing, damaging, destroying or carrying off any safety device, safeguard, notice or warning intended for use in any place of employment.

(b) Interfering in any way with the use of any safety device, method or process adopted for the protection of any employee.

(5) Intoxicating beverages or narcotics in or around worksites. Employees under the influence of alcohol or narcotics are prohibited from the worksite.

Exception: This rule does not apply to anyone taking prescription drugs and/or narcotics as directed by a physician providing such use does not endanger the employee or others.

[97-09-013, recodified as § 296-307-045, filed 4/7/97, effective 4/7/97. Statutory Authority: RCW 49.17.040, [49.17.]050 and [49.17.]060. 96-22-048, § 296-306A-045, filed 10/31/96, effective 12/1/96.]

Part C
Hand Tools

WAC 296-307-050 What requirements apply to hand tools? (1) Using hoes with handles less than four feet long or any hand tool used for weeding or thinning crops in a stooped position, is prohibited.

(2) You must ensure that hand tools are in good condition. Using defective hand tools is prohibited.

(3) You must ensure that hand tools are stored safely when not in use.

[97-09-013, recodified as § 296-307-050, filed 4/7/97, effective 4/7/97. Statutory Authority: RCW 49.17.040, [49.17.]050 and [49.17.]060. 96-22-048, § 296-306A-050, filed 10/31/96, effective 12/1/96.]

Part D
Ladders, Bulk Storage, Pits, and Trenches

WAC 296-307-055 Ladders.

[97-09-013, recodified as § 296-307-055, filed 4/7/97, effective 4/7/97. Statutory Authority: RCW 49.17.040, [49.17.]050 and [49.17.]060. 96-22-048, § 296-306A-055, filed 10/31/96, effective 12/1/96.]

WAC 296-307-05501 How must ladders be cared for and maintained? (1) Ladders must be checked for defects before use, and thoroughly inspected periodically. Ladders shall be inspected immediately in the following situations:

(a) If a ladder tips over, inspect for side rails dents or bends, or excessively dented rungs; check all rung-to-side-rail connections; check hardware connections; check rivets for shear.

(b) If a ladder is exposed to excessive heat, inspect visually for damage and test for deflection and strength characteristics. If you are unsure about the ladder's condition, seek help from the manufacturer.

(2) Ladders must be maintained in good condition at all times. Joints between steps and side rails must be tight. All hardware and fittings must be securely attached, and the moveable parts must operate freely without binding or with too much play.

(3) Defective ladders must be withdrawn from service for repair or destruction and tagged as "Dangerous—Do not use."

(4) Ladders with broken or missing steps, rungs, or cleats, broken side rails, or other faulty equipment must not be used; improvised repairs must not be made.

(5) Ladders must be handled with care. Avoid unnecessary dropping, jarring, or misuse.

(6) Ladder storage must:

(a) Protect the ladder when not in use;

(b) Provide sufficient support to prevent excessive sagging;

(c) Provide ease of access or inspection; and

(d) Prevent danger of accidents when withdrawing a ladder for use.

[97-09-013, recodified as § 296-307-05501, filed 4/7/97, effective 4/7/97. Statutory Authority: RCW 49.17.040, [49.17.]050 and [49.17.]060. 96-22-048, § 296-306A-05501, filed 10/31/96, effective 12/1/96.]

WAC 296-307-05503 How must an employer instruct employees to use ladders? (1) At the beginning of employment, you must provide employees with orientation and training on the proper use of ladders, including how to set a ladder and properly dismount with a full load.

(2) To prevent ladder upset, you must instruct employees to avoid overreaching while standing on the ladder.

(3) You must instruct employees that before climbing ladders; rungs, shoes, and boots must be clean of substances that would make them hazardous.

(4) Employees must not climb up or down ladders while carrying tools or materials that interfere with the free use of both hands.

(5) Ladders must not be placed on boxes, barrels, or other unstable bases to obtain additional height.

(6) Stepladders must not be used as single ladders.

(7) When working from a ladder over twenty-five feet from the ground or floor, the ladder must be secured at both top and bottom. When work on a ladder over twenty-five feet from the ground or floor requires the use of both hands, a safety belt must be worn and the safety lanyard secured to the ladder.

(8) Portable ladders must be placed so that the side rails have a secure footing. The top rest for portable rung and cleat ladders must be reasonably rigid and strong enough to support the applied load. The top of the ladder must be placed with the two rails supported, unless equipped with a single support attachment. Such an attachment should be substantial and large enough to support the ladder under load.

(9) Ladders carried on vehicles should be adequately supported to avoid sagging and securely fastened in position to minimize chafing and the effects of road shocks.

[97-09-013, recodified as § 296-307-05503, filed 4/7/97, effective 4/7/97. Statutory Authority: RCW 49.17.040, [49.17.]050 and [49.17.]060. 96-22-048, § 296-306A-05503, filed 10/31/96, effective 12/1/96.]

WAC 296-307-05505 How must orchard ladders be used? (1) Orchard ladders longer than sixteen feet are prohibited.

(2) Employers must instruct employees to not stand on the top two steps (the top cap and the next step down) of orchard ladders.

(3) Employers must instruct employees to not step off the ladder onto branches of trees except onto the main crotch.

(4) Standing on the top two steps of the orchard ladder is prohibited.

[97-09-013, recodified as § 296-307-05505, filed 4/7/97, effective 4/7/97. Statutory Authority: RCW 49.17.040, [49.17.]050 and [49.17.]060. 96-22-048, § 296-306A-05505, filed 10/31/96, effective 12/1/96.]

WAC 296-307-05507 What other requirements apply to ladders? (1) Ladders made by fastening cleats across a single rail are prohibited.

(2) Wood ladders, when not in use, should be stored where they will not be exposed to the elements, but where

there is good ventilation. They must be stored away from radiators, stoves, steam pipes, or other excessive heat or dampness.

(3) Wooden ladders should be kept coated with a suitable protective material. Painted ladders are acceptable if the ladders are carefully inspected prior to painting by competent and experienced inspectors acting for, and responsible to, the purchaser, and if the ladders are not for resale.

(4) A ladder must have feet that are appropriate for the surface on which it will be used.

For example: A ladder used on a slippery surface must have steel points or other nonslip material on its feet.

(5) Ladders must not be placed in front of doors opening toward the ladder unless the door is blocked open, locked, or guarded.

(6) Ladder safety devices may be used on tower, water tank and chimney ladders over twenty feet long in place of cage protection. No landing platform is required in these cases. All ladder safety devices such as lifebelts, friction brakes, and sliding attachments must meet the design requirements of the ladders that they serve.

(7) See chapter 296-307 WAC Part K for requirements related to working near overhead lines.

[Statutory Authority: RCW 49.17.040. 98-24-096, § 296-307-05507, filed 12/1/98, effective 3/1/99. 97-09-013, recodified as § 296-307-05507, filed 4/7/97, effective 4/7/97. Statutory Authority: RCW 49.17.040, [49.17.]050 and [49.17.]060. 96-22-048, § 296-306A-05507, filed 10/31/96, effective 12/1/96.]

WAC 296-307-060 What requirements apply to job-made ladders? A "job-made ladder" is a ladder that you or your employees build.

Job-made ladders must meet the following requirements:

(1) All cleats must be made of one-by-four-inch nominal lumber, or stronger.

(2) Cleats must be inset into the edges of side rails to a depth of one-half inch, or filler blocks must be used on the rails between the cleats.

(3) Each cleat must be fastened to each rail with three 8d common wire nails or other fasteners of equal strength.

(4) Cleats must be uniformly spaced approximately 12 inches from the top of one cleat to the top of the next.

(5) Side rails must be continuous, unless splices develop the full strength of a continuous rail of equal length.

[97-09-013, recodified as § 296-307-060, filed 4/7/97, effective 4/7/97. Statutory Authority: RCW 49.17.040, [49.17.]050 and [49.17.]060. 96-22-048, § 296-306A-060, filed 10/31/96, effective 12/1/96.]

WAC 296-307-061 What requirements apply to working around bins, bunkers, hoppers, tanks, pits, and trenches? (1) Employees must be prohibited from entering any bin, bunker, hopper, or similar area when loose materials (such as chips, sand, grain, gravel, sawdust, etc.) may collapse, unless the employee wears a safety belt with a lifeline attached and is attended by a helper.

Note: Silage pits are exempt from this section.
Reference: For requirements relating to confined spaces, see WAC 296-307-642 through 296-307-656.

(2) When employees are required to work in a trench or a pit 4 feet deep or more, the trench or the pit must be shored or sloped according to the following table:

SOIL OR ROCK TYPE MAXIMUM ALLOWABLE	SLOPES (H:V) (1) FOR EXCAVATIONS LESS THAN 20 FEET DEEP (2)
STABLE ROCK	VERTICAL (90°)
TYPE A	3/4:1 (53°)
TYPE B	1:1 (45°)
TYPE C	1 1/2:1 (34°)

1 Numbers in parentheses next to maximum allowable slopes are angles in degrees from the horizontal. Angles have been rounded off.
2 Sloping or benching for excavations greater than 20 feet deep must be designed by a registered professional engineer.

(3) Each soil and rock deposit must be classified by a competent person as Stable Rock, Type A, B, or C according to the definitions in WAC 296-155-66401. "Competent person" means someone who is able to identify working conditions that are hazardous to employees, and has authority to take prompt action to eliminate the hazards.

(4) Classification of the deposits must be based on the results of at least one visual and at least one manual analysis. The analyses must be conducted by a competent person using tests in recognized methods of soil classification and testing such as those adopted by the American Society for Testing Materials, or the U.S. Department of Agriculture textural classification system.

[Statutory Authority: RCW 49.17.010, 49.17.040, 49.17.050, 49.17.060. 05-01-166, § 296-307-061, filed 12/21/04, effective 4/2/05. 97-09-013, recodified as § 296-307-061, filed 4/7/97, effective 4/7/97. Statutory Authority: RCW 49.17.040, [49.17.]050 and [49.17.]060. 96-22-048, § 296-306A-061, filed 10/31/96, effective 12/1/96.]

Part E
Vehicles and Farm Field Equipment

WAC 296-307-065 How must slow-moving vehicles be marked? (1) You must ensure that all farm tractors and other slow-moving farm vehicles and equipment used on public roads have lamps, reflectors, and a slow-moving vehicle emblem. From one-half hour after sunset to one-half hour before sunrise, slow-moving vehicles must have lights and reflectors.

(2) The slow-moving vehicle emblem is a fluorescent yellow-orange triangle with a dark red reflective border. (See figure.) The emblem must be used on public roads only by vehicles designed to move slowly (25 M.P.H. or less).

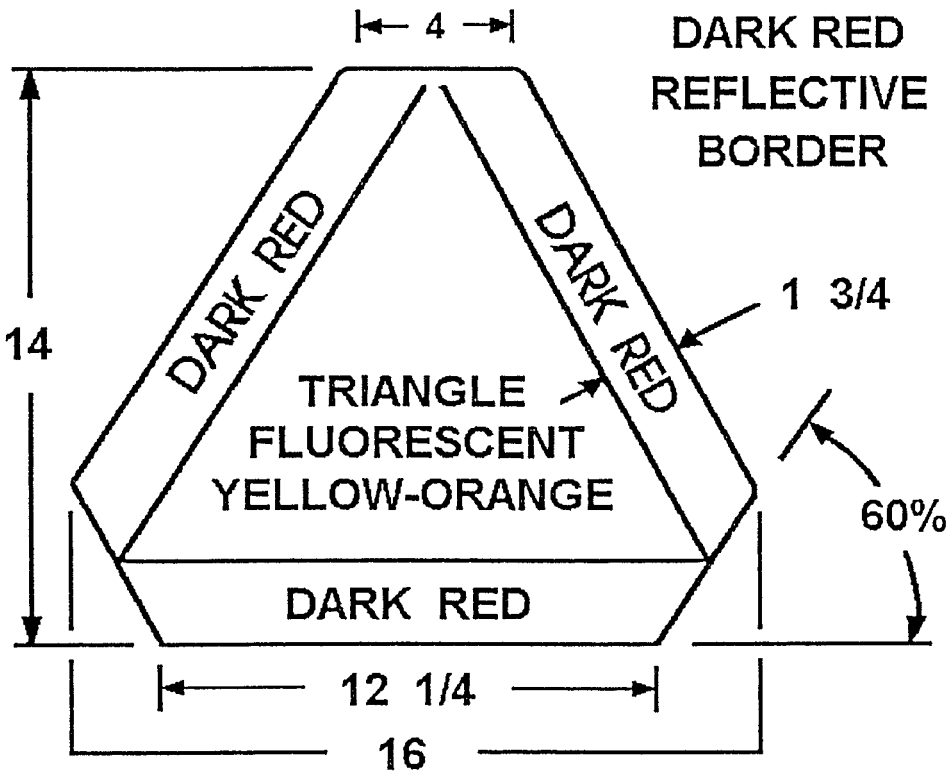

[97-09-013, recodified as § 296-307-065, filed 4/7/97, effective 4/7/97. Statutory Authority: RCW 49.17.040, [49.17.]050 and [49.17.]060. 96-22-048, § 296-306A-065, filed 10/31/96, effective 12/1/96.]

WAC 296-307-070 Motor vehicles.

[97-09-013, recodified as § 296-307-070, filed 4/7/97, effective 4/7/97. Statutory Authority: RCW 49.17.040, [49.17.]050 and [49.17.]060. 96-22-048, § 296-306A-070, filed 10/31/96, effective 12/1/96.]

WAC 296-307-07001 How must motor vehicles be maintained? (1) You must maintain all motor vehicles and their parts in good repair and safe condition.

(2) You must not use tires that are worn beyond the point of safety.

(3) Employees must report to you any motor vehicle or other farm equipment that is in unsafe operating condition. You must ensure that the vehicle or equipment is removed from service and repaired before use.

(4) Before an employee performs service or repair work under hydraulic or mechanical raised dump truck beds, blades, discs, or other equipment, the raised portion of the equipment must be manually pinned or blocked to prevent falling.

[97-09-013, recodified as § 296-307-07001, filed 4/7/97, effective 4/7/97. Statutory Authority: RCW 49.17.040, [49.17.]050 and [49.17.]060. 96-22-048, § 296-306A-07001, filed 10/31/96, effective 12/1/96.]

WAC 296-307-07003 How must motor vehicles be operated? (1) Vehicles must be driven at safe operating speed.

(2) Truck drivers must operate equipment at a safe speed for roadway conditions.

(3) When an employee backing a truck has obstructed vision, the employee must be assisted by a signaler. The signaler must have a clear view of the rear of the truck and the operator of the truck.

(4) Truck drivers must sound their horn before starting to back, and intermittently while backing.

(5) Shut off motors before refueling. Take care to prevent fuel from spilling on hot parts.

[97-09-013, recodified as § 296-307-07003, filed 4/7/97, effective 4/7/97. Statutory Authority: RCW 49.17.040, [49.17.]050 and [49.17.]060. 96-22-048, § 296-306A-07003, filed 10/31/96, effective 12/1/96.]

WAC 296-307-07005 Who may operate motor vehicles? Only qualified drivers may operate motor vehicles and must have a current motor vehicle operator's license.

[97-09-013, recodified as § 296-307-07005, filed 4/7/97, effective 4/7/97. Statutory Authority: RCW 49.17.040, [49.17.]050 and [49.17.]060. 96-22-048, § 296-306A-07005, filed 10/31/96, effective 12/1/96.]

WAC 296-307-07007 What requirements apply to motor vehicle brakes? (1) You must ensure that motor vehicles have brakes that will safely hold the maximum load on maximum grades.

(2) Trucks parked on an incline must have the steered wheels turned into the curb and must have at least one "driver" wheel chocked on each side, independent of the braking system.

Exception: If the truck has a functioning secondary braking system, the turned wheels and chock are not required.

(3) You must ensure that trailers have working air brakes, or another approved type. Air must be cut into the

trailer brake system at the time that the trailer is coupled to the truck.

(4) The driver must test truck and trailer brakes before driving down a steep grade.

[97-09-013, recodified as § 296-307-07007, filed 4/7/97, effective 4/7/97. Statutory Authority: RCW 49.17.040, [49.17.]050 and [49.17.]060. 96-22-048, § 296-306A-07007, filed 10/31/96, effective 12/1/96.]

WAC 296-307-07009 How must motor vehicles be loaded and unloaded? (1) You must ensure that employees load and unload motor vehicles safely.

(2) All loads transported on trucks or truck and trailer combinations must be properly secured and distributed. Loads must not exceed the safe operating load for the roadway condition and the capacity of the bridges, trestles, and other structures.

[97-09-013, recodified as § 296-307-07009, filed 4/7/97, effective 4/7/97. Statutory Authority: RCW 49.17.040, [49.17.]050 and [49.17.]060. 96-22-048, § 296-306A-07009, filed 10/31/96, effective 12/1/96.]

WAC 296-307-07011 What safety equipment must motor vehicles have? All motor vehicles must have standard lights, horn, flags, flares, and other safety equipment that conforms to the state of Washington motor vehicles laws.

[97-09-013, recodified as § 296-307-07011, filed 4/7/97, effective 4/7/97. Statutory Authority: RCW 49.17.040, [49.17.]050 and [49.17.]060. 96-22-048, § 296-306A-07011, filed 10/31/96, effective 12/1/96.]

WAC 296-307-07013 What rules apply to vehicles used to transport employees? You must ensure that motor vehicles used regularly to transport employees meet the following requirements:

(1) The vehicles are well equipped, covered against the weather, and maintained in good mechanical condition at all times.

(2) A sufficient number of properly secured seats are provided in each vehicle to accommodate the number of employees transported. When emergency conditions make it necessary to transport more employees than the seating capacity can accommodate, all employees must ride within the vehicle. No employee may ride on fenders or running boards of the vehicle.

(3) No employees may ride in or on any vehicle with their legs hanging over the end or sides. All trucks without tail gates should have safety bars.

(4) The vehicles have storage strong enough to retain sharp tools that could present a hazard to employees being transported.

(5) All dump-trucks used to transport employees have an adequate safety chain or locking device to ensure that the body of the truck is not raised while employees are riding in it.

(6) Explosives or highly inflammable materials are not carried in or on the vehicle while it is used to transport employees.

(7) Exhaust systems are installed and maintained in proper condition, and are designed to eliminate the employee exposure to exhaust gases and fumes.

(8) Within the cab, crew trucks must carry only the number of passengers for which they are designed. In any seating arrangement, the driver must be able to maintain full freedom of motion. The driver's normal vision must be free from obstruction by passengers or the seating arrangement.

(9) All enclosed crew trucks have an emergency exit in addition to the regular entrance.

(10) Trucks used for hauling gravel may be used as crew trucks if they meet the following requirements:

(a) Steps in proper places;

(b) Wooden floors;

(c) Securely fastened seats;

(d) Truck is properly covered; and

(e) Compliance with all other general regulations covering crew trucks.

(11) Half-ton vehicles must haul no more than six persons including driver. Three-quarter-ton vehicles must haul no more than eight persons including driver.

(12) The vehicle is equipped with the first-aid supplies required by WAC 296-307-03920, two blankets, and a fire extinguisher.

Note: Additional requirements relating to first aid are located in WAC 296-307-039.

(13) Heating units with open fires are not used in vehicles transporting crews.

[Statutory Authority: RCW 49.17.010, 49.17.040, 49.17.050, 49.17.060. 05-01-166, § 296-307-07013, filed 12/21/04, effective 4/2/05. Statutory Authority: RCW 49.17.010, [49.17].040, and [49.17].050. 01-17-033, § 296-307-07013, filed 8/8/01, effective 9/1/01. Statutory Authority: RCW 49.17.040. 98-24-096, § 296-307-07013, filed 12/1/98, effective 3/1/99. 97-09-013, recodified as § 296-307-07013, filed 4/7/97, effective 4/7/97. Statutory Authority: RCW 49.17.040, [49.17.]050 and [49.17.]060. 96-22-048, § 296-306A-07013, filed 10/31/96, effective 12/1/96.]

WAC 296-307-073 What requirements apply to changing and charging storage batteries? (1) Battery changing installations must be located in areas designated for that purpose.

(2) Facilities must be provided for:

- Flushing and neutralizing spilled electrolyte;
- Fire protection;
- Protecting charging apparatus from damage by trucks; and
- Adequate ventilation of fumes from gassing batteries.

(3) Racks used to support batteries should be made of or covered with materials that will not create sparks.

(4) A conveyor, overhead hoist, or equivalent material handling equipment must be provided for handling batteries.

(5) Reinstalled batteries must be properly positioned and secured in the vehicle.

(6) A carboy tilter or siphon must be provided for handling electrolyte.

(7) When mixing water and acid for charging batteries, pour acid into water; do not pour water into acid.

(8) Vehicles must be properly positioned and the brake applied before attempting to change or charge batteries.

(9) When charging batteries, the vent caps should be kept in place to avoid electrolyte spray. You must ensure that vent caps function. The battery (or compartment) cover(s) must be open for cooling.

(10) Precautions shall be taken to prevent open flames, sparks, or electric arcs in battery charging areas.

(11) Tools and other metallic objects must be kept away from the tops of uncovered batteries.

[97-09-013, recodified as § 296-307-073, filed 4/7/97, effective 4/7/97. Statutory Authority: RCW 49.17.040, [49.17.]050 and [49.17.]060. 96-22-048, § 296-306A-073, filed 10/31/96, effective 12/1/96.]

WAC 296-307-076 How must farm field equipment be guarded? "Farm field equipment" means tractors or implements, including self-propelled implements, used in agricultural operations.

(1) All power transmission components must be guarded according to WAC 296-307-280.

(2) The manufacturer's instruction manual, if published by the manufacturer and currently available, must be the source of information for the safe operation and maintenance of field equipment.

(3) You must ensure that all power takeoff shafts, including rear, mid-mounted or side-mounted shafts, are guarded by a master shield, as follows:

(a) The rear power takeoff has a master shield. The master shield is strong enough to prevent permanent deformation of the shield when a 250-pound operator mounts or dismounts the tractor using the shield as a step.

(b) Power takeoff driven equipment is guarded to prevent employee contact with rotating members of the power drive system. When the tractor master shield must be removed to use specific power takeoff driven equipment, the equipment must provide protection from the part of the tractor power takeoff shaft that protrudes from the tractor.

(c) Signs are placed at prominent locations on the tractor and on power takeoff driven equipment requiring that safety shields are kept in place.

(4) The following functional components must be shielded to a degree consistent with the intended function and operator's vision of the component.

- Snapping or husking rolls;
- Straw spreaders and choppers;
- Cutterbars;
- Flail rotors;
- Rotary beaters;
- Mixing augers;
- Feed rolls;
- Conveying augers;
- Rotary tillers; and
- Similar units that must be exposed for proper function

(5) Where removing a guard or access door will expose an employee to any component that continues to rotate after the power is disengaged, you must provide, in the immediate area:

(a) A safety sign warning the employee to look and listen for evidence of rotation and to wait until all components have stopped before removing the guard or access door.

(b) A readily visible or audible warning of rotation on equipment manufactured after October 25, 1976.

(6) If the mounting steps or ladder and the handholds of the propelling vehicle are made inaccessible by installation of other equipment, other steps and handholds must be provided on the equipment.

(7) You must ensure that the operator's steps and platform have a slip-resistant covering to minimize the possibility of slipping.

(8) Powered machines not driven by an individual motor must have a clutch or other effective means of stopping.

(9) All friction clutches must have sufficient clearance and be kept adjusted to prevent drag or creeping when disengaged.

[Statutory Authority: RCW 49.17.040. 98-24-096, § 296-307-076, filed 12/1/98, effective 3/1/99. 97-09-013, recodified as § 296-307-076, filed 4/7/97, effective 4/7/97. Statutory Authority: RCW 49.17.040, [49.17.]050 and [49.17.]060. 96-22-048, § 296-306A-076, filed 10/31/96, effective 12/1/96.]

Part F
Rollover Protective Structures (ROPS) for Tractors

WAC 296-307-080 Rollover protective structures (ROPS) for tractors.

[97-09-013, recodified as § 296-307-080, filed 4/7/97, effective 4/7/97. Statutory Authority: RCW 49.17.040, [49.17.]050 and [49.17.]060. 96-22-048, § 296-306A-080, filed 10/31/96, effective 12/1/96.]

WAC 296-307-08003 Which agricultural tractors are covered by this section? All agricultural tractors manufactured after October 25, 1976, must meet the requirements of WAC 296-307-080. An agricultural tractor manufactured on or before October 25, 1976, must meet the requirements of WAC 296-307-080 if:

(1) The tractor was built or sold with rollover protective structures (ROPS) as an optional accessory; or

(2) According to the manufacturer, the tractor was designed to accommodate the addition of ROPS.

[Statutory Authority: RCW 49.17.040. 98-24-096, § 296-307-08003, filed 12/1/98, effective 3/1/99. 97-09-013, recodified as § 296-307-08003, filed 4/7/97, effective 4/7/97. Statutory Authority: RCW 49.17.040, [49.17.]050 and [49.17.]060. 96-22-048, § 296-306A-08003, filed 10/31/96, effective 12/1/96.]

WAC 296-307-08006 What definitions apply to rollover protective structures (ROPS) for agricultural tractors? "Agricultural tractor" means a two-wheel-drive or four-wheel-drive vehicle, or a track vehicle of more than twenty net engine horsepower, designed to furnish the power to pull, carry, propel, or drive implements that are designed for agriculture. All human-powered implements are excluded.

"Low profile tractor" means a wheel or track-equipped vehicle with the following characteristics:

- The front wheel spacing is equal to the rear wheel spacing, as measured between the centerlines of the wheels;
- The clearance from the bottom of the tractor chassis to the ground is eighteen inches or less;
- The highest point of the hood is sixty inches or less, and
- The tractor is designed so that the operator straddles the transmission when seated.

[97-09-013, recodified as § 296-307-08006, filed 4/7/97, effective 4/7/97. Statutory Authority: RCW 49.17.040, [49.17.]050 and [49.17.]060. 96-22-048, § 296-306A-08006, filed 10/31/96, effective 12/1/96.]

WAC 296-307-08009 What requirements apply to the testing and performance of ROPS used on agricultural tractors? You must provide a rollover protective structure (ROPS) for each employee-operated tractor that is covered by WAC 296-307-080. ROPS used on wheel-type tractors must meet the test and performance requirements of

OSHA 1928.51 CFR. Protective frames for wheel type agricultural tractors, and ROPS used on track-type tractors must meet the test and performance requirements of SAE Standard J334a (July 1970) and the portions of SAE Standard J167 (1971) pertaining to overhead protection requirements.

[Statutory Authority: RCW 49.17.010, [49.17].040, [49.17].050. 02-12-098, § 296-307-08009, filed 6/5/02, effective 8/1/02. Statutory Authority: RCW 49.17.040. 98-24-096, § 296-307-08009, filed 12/1/98, effective 3/1/99. 97-09-013, recodified as § 296-307-08009, filed 4/7/97, effective 4/7/97. Statutory Authority: RCW 49.17.040, [49.17.]050 and [49.17.]060. 96-22-048, § 296-306A-08009, filed 10/31/96, effective 12/1/96.]

WAC 296-307-08012 What requirements apply to seatbelts used with ROPS on agricultural tractors? (1) Where ROPS are required by WAC 296-307-080, you must:

(a) Provide each tractor with a seatbelt;

(b) Require that each employee use the seatbelt while the tractor is moving; and

(c) Require that each employee tighten the seatbelt sufficiently to confine the employee to the ROPS protected area.

(2) Each seatbelt and seatbelt anchorage must meet the requirements of ANSI/SAE J800 April 1986, Motor Vehicle Seat Belt Assemblies.

(a) Where a suspended seat is used, the seatbelt must be fastened to the movable portion of the seat.

(b) The seatbelt webbing material must be at least as resistant to acids, alkalis, mildew, aging, moisture and sunlight as untreated polyester fiber.

[Statutory Authority: RCW 49.17.040. 98-24-096, § 296-307-08012, filed 12/1/98, effective 3/1/99. 97-09-013, recodified as § 296-307-08012, filed 4/7/97, effective 4/7/97. Statutory Authority: RCW 49.17.040, [49.17.]050 and [49.17.]060. 96-22-048, § 296-306A-08012, filed 10/31/96, effective 12/1/96.]

WAC 296-307-08015 When are ROPS not required on agricultural tractors? ROPS are not required on agricultural tractors that are used as follows:

(1) Low profile tractors used in orchards, vineyards or hop yards where the vertical clearance requirements would substantially interfere with normal operations, and for work related to these uses.

(2) Low profile tractors while used inside a farm building or greenhouse in which the vertical clearance is insufficient to allow a ROPS equipped tractor to operate.

(3) Tractors while used with mounted equipment that is incompatible with ROPS (for example, cornpickers, cotton strippers, vegetable pickers, and fruit harvesters).

(4) Track-type agricultural tractors whose overall width (measured between the outside edges of the tracks) is at least three times the height of the rated center of gravity, and whose rated maximum speed in forward or reverse is not greater than seven miles per hour, when used only for tillage or harvesting operations, and which:

(a) Does not involve operating on slopes in excess of forty percent from horizontal; and

(b) Does not involve operating on piled crop products or residue (for example: Silage in stacks or pits); and

(c) Does not involve operating in close proximity to irrigation ditches, streams or other excavations more than two feet deep that contain slopes of more than forty percent from horizontal; and

(d) Does not involve construction-type operation, such as bulldozing, grading, or land clearing.

[97-09-013, recodified as § 296-307-08015, filed 4/7/97, effective 4/7/97. Statutory Authority: RCW 49.17.040, [49.17.]050 and [49.17.]060. 96-22-048, § 296-306A-08015, filed 10/31/96, effective 12/1/96.]

WAC 296-307-08018 What employee training requirements apply to ROPS used on agricultural tractors? (1) You must ensure that every employee who operates an agricultural tractor is informed of the operating practices listed below and of any other practices dictated by the work environment. You must provide the information at the time of initial assignment and at least annually thereafter.

EXHIBIT A
EMPLOYEE OPERATING INSTRUCTIONS

1. Securely fasten your seat belt if the tractor has a ROPS.
2. Where possible, avoid operating the tractor near ditches, embankments and holes.
3. Reduce speed when turning, crossing slopes and on rough, slick or muddy surfaces.
4. Stay off slopes too steep for safe operation.
5. Watch where you are going, especially at row ends, on roads and around trees.
6. Passengers, other than persons required for instruction or machine operation, shall not be permitted to ride on equipment unless a passenger seat or other protective device is provided.
7. Operate the tractor smoothly—no jerky turns, starts, or stops.
8. Hitch only to the drawbar and hitch points recommended by tractor manufacturers.
9. When tractor is stopped, set brakes securely and use park lock if available.

(2) You must ensure that every employee who operates an agriculture tractor is trained specifically in the operation of the tractor to be used. The training must include an orientation of the operator to the topographical features of the land where the tractor will be operated. Training must emphasize safe operating practices to avoid rollover.

(3) The tractor training program must be described in the written accident prevention program required by WAC 296-307-030.

[Statutory Authority: RCW 49.17.040. 98-24-096, § 296-307-08018, filed 12/1/98, effective 3/1/99. 97-09-013, recodified as § 296-307-08018, filed 4/7/97, effective 4/7/97. Statutory Authority: RCW 49.17.040, [49.17.]050 and [49.17.]060. 97-08-051A, § 296-306A-08018, filed 3/31/97, effective 5/1/97; 96-22-048, § 296-306A-08018, filed 10/31/96, effective 12/1/96.]

WAC 296-307-08021 What other requirements apply to ROPS used on agricultural tractors? (1) You must ensure that batteries, fuel tanks, oil reservoirs, and coolant systems are constructed and located or sealed to ensure that no spillage comes in contact with the operator in the event of an upset.

(2) All sharp edges and corners at the operator's station must be designed to minimize operator injury in the event of an upset.

(3) When ROPS are removed, they must be remounted to meet the requirements of WAC 296-307-080.

(4) You must ensure that each ROPS has a label, permanently affixed to the structure, that states:

(a) Manufacturer's or fabricator's name and address;

(b) ROPS model number, if any;

(c) Tractor makes, models, or series numbers that the structure is designed to fit; and

(d) That the ROPS model was tested in accordance with the requirements of this section.

[Statutory Authority: RCW 49.17.040. 98-24-096, § 296-307-08021, filed 12/1/98, effective 3/1/99. 97-09-013, recodified as § 296-307-08021, filed 4/7/97, effective 4/7/97. Statutory Authority: RCW 49.17.040, [49.17.]050 and [49.17.]060. 96-22-048, § 296-306A-08021, filed 10/31/96, effective 12/1/96.]

WAC 296-307-085 When must ROPS be provided for material handling equipment? (1) This section applies to the following types of material handling equipment: Rubber-tired, self-propelled scrapers; rubber-tired front-end loaders; rubber-tired dozers; wheel-type agricultural and industrial tractors; crawler tractors; crawler-type loaders; and motor graders, with or without attachments, that are used in agricultural work. This section does not apply to side-boom pipelaying tractors.

(2) You must ensure that material handling equipment manufactured on or after October 25, 1976, is equipped with ROPS that meet the minimum performance standards of WAC 296-307-08009.

(3) ROPS and supporting attachments must meet the minimum performance standards of OSHA 1928.52 CFR, Protective Frames for Wheel Type Agricultural Tractors, or must be designed, fabricated, and installed in a manner that will support, based on the ultimate strength of the metal, at least two times the weight of the prime mover applied at the point of impact.

(a) The ROPS must be designed to minimize the likelihood of a complete overturn and to minimize the possibility of the operator being crushed in a rollover.

(b) The design must provide a vertical clearance of at least fifty-two inches from the work deck to the ROPS at the entrance.

(4) When ROPS are removed, they must be remounted so as to meet the requirements of this section.

(5) Each ROPS must have a label, permanently affixed to the structure, that states:

(a) Manufacturer's or fabricator's name and address;

(b) ROPS model number, if any;

(c) Tractor makes, models, or series numbers that the structure is designed to fit; and

(d) That the ROPS model was tested in accordance with the requirements of this section.

[Statutory Authority: RCW 49.17.040. 98-24-096, § 296-307-085, filed 12/1/98, effective 3/1/99. 97-09-013, recodified as § 296-307-085, filed 4/7/97, effective 4/7/97. Statutory Authority: RCW 49.17.040, [49.17.]050 and [49.17.]060. 96-22-048, § 296-306A-085, filed 10/31/96, effective 12/1/96.]

WAC 296-307-090 What requirements apply to overhead protection for operators of agricultural and industrial tractors? This section applies to wheel-type agricultural tractors used in construction work and to wheel-type industrial tractors used in agriculture work.

(1) If grid or mesh is used for overhead protection, the largest permissible opening is 1.5 in. (38 mm.) in diameter. The overhead protection must not be installed in such a way as to become a hazard in the case of upset.

(2) All equipment used in site clearing operations must have rollover guards meeting the requirements of this chapter. You must ensure that rider-operated equipment is equipped with an overhead and rear canopy guard meeting the following requirements:

(a) The overhead covering is at least eighth-inch steel plate or quarter-inch woven wire mesh with openings no greater than one inch, or equivalent.

(b) The opening in the rear of the canopy structure is covered with not less than quarter-inch woven wire mesh with openings no greater than one inch.

(3) Overhead protection that meets the provisions of SAE Standard J334 (July 1970) for rubber-tired dozers and rubber-tired loaders also meets the requirements of this standard.

[97-09-013, recodified as § 296-307-090, filed 4/7/97, effective 4/7/97. Statutory Authority: RCW 49.17.040, [49.17.]050 and [49.17.]060. 96-22-048, § 296-306A-090, filed 10/31/96, effective 12/1/96.]

Part G
Field Sanitation

WAC 296-307-095 Field sanitation.

[97-09-013, recodified as § 296-307-095, filed 4/7/97, effective 4/7/97. Statutory Authority: RCW 49.17.040, [49.17.]050 and [49.17.]060. 96-22-048, § 296-306A-095, filed 10/31/96, effective 12/1/96.]

WAC 296-307-09503 What does this section cover? WAC 296-307-095 applies to any agricultural employer with one or more employees engaged in any hand-labor operations in the field.

EXCEPTION: WAC 296-307-09515 (handwashing facilities) and 296-307-09518 (toilet facilities) do not apply if your employees:
(1) Are engaged in field activities for the production of grains, livestock, or livestock feed; or
(2) Use vehicles, machinery, or animals as part of their field activities and, when needed, can transport themselves to and from toilet and handwashing facilities.

[Statutory Authority: RCW 49.17.040. 98-24-096, § 296-307-09503, filed 12/1/98, effective 3/1/99. 97-09-013, recodified as § 296-307-09503, filed 4/7/97, effective 4/7/97. Statutory Authority: RCW 49.17.040, [49.17.]050 and [49.17.]060. 96-22-048, § 296-306A-09503, filed 10/31/96, effective 12/1/96.]

WAC 296-307-09506 What definitions apply to this section? "Accessible" means a maximum of one-quarter mile or five minutes travel time from the worksite.

"Hand-labor operations" means agricultural operations performed by hand or with hand tools.

For example: The hand cultivation, weeding, planting or harvesting of vegetables, nuts, fruit, seedlings or other crops, including mushrooms, and hand packing into containers.

EXCEPTION: Hand-labor does not include logging operations, the care or feeding of livestock, or hand-labor operations in permanent structures (e.g., canning facilities or packing houses).

"Handwashing facility" means a facility that meets the requirements of WAC 296-307-09515 and is approved by the local health authority.

"Toilet" means a fixed or portable facility designed for the purpose of adequate collection and containment of both defecation and urination. "Toilet" includes biological, chemical, flush, and combustion toilets, or sanitary outhouses.

[Statutory Authority: RCW 49.17.040. 98-24-096, § 296-307-09506, filed 12/1/98, effective 3/1/99. 97-09-013, recodified as § 296-307-09506, filed 4/7/97, effective 4/7/97. Statutory Authority: RCW 49.17.040, [49.17.]050 and [49.17.]060. 96-22-048, § 296-306A-09506, filed 10/31/96, effective 12/1/96.]

WAC 296-307-09509 What orientation must employers provide for field sanitation? You must provide each employee with verbal orientation on field sanitation facilities. The orientation must be understandable to each employee and must include:

(1) The location of potable water supplies and the importance of drinking water frequently, especially on hot days;

(2) Identification of all nonpotable water at the worksite and prohibition of the use of nonpotable water for sanitation purposes with an explanation of the hazards associated with using nonpotable water;

(3) The location of handwashing facilities and the importance of handwashing:

(a) Before and after using the toilet; and

(b) Before eating and smoking; and

(4) The location of toilet facilities; an explanation that facilities are for employee convenience and health considerations; the necessity to keep them sanitary; and that using the fields, orchards, or forests is not an option.

[Statutory Authority: RCW 49.17.040. 98-24-096, § 296-307-09509, filed 12/1/98, effective 3/1/99. 97-09-013, recodified as § 296-307-09509, filed 4/7/97, effective 4/7/97. Statutory Authority: RCW 49.17.040, [49.17.]050 and [49.17.]060. 96-22-048, § 296-306A-09509, filed 10/31/96, effective 12/1/96.]

WAC 296-307-09512 What potable water sources must an employer provide? You must provide potable water for employees engaged in hand-labor operations in the field, without cost to the employee. Potable water must meet the following requirements:

(1) Potable water is in locations that are accessible to all employees.

(2) Potable water containers are refilled daily or more often as necessary.

(3) Potable water dispensers are designed, constructed, and serviced so that sanitary conditions are maintained. They are closeable and equipped with a tap.

(4) Open containers such as barrels, pails, or tanks for drinking water from which water must be dipped or poured, whether or not they are fitted with a cover, are prohibited.

(5) Any container used to distribute drinking water is clearly marked in English and with the appropriate international symbol describing its contents.

(6) Any container used to distribute drinking water is only used for that purpose.

(7) Potable water is suitably cool and provided in sufficient amounts, taking into account the air temperature, humidity, and the nature of the work performed, to meet employees' needs.

Note: Suitably cool water should be sixty degrees Fahrenheit or less. During hot weather, employees may require up to three gallons of water per day.

(8) The use of common drinking cups or dippers is prohibited. Water is dispensed in single-use drinking cups, personal containers, or by water fountains.

"Single-use drinking cups" means containers of any type or size, disposable or not, and including personal containers if the choice to use a personal container is made by the employee, not the employer.

(9) Employees must be prohibited from drinking from irrigation ditches, creeks or rivers. Potable water must meet the quality standards for drinking purposes of the state or local authority, or must meet quality standards of the United States Environmental Protection Agency's National Interim—Primary Drinking Water Regulations, published in 40 CFR Part 141 and 40 CFR 147.2400.

[97-09-013, recodified as § 296-307-09512, filed 4/7/97, effective 4/7/97. Statutory Authority: RCW 49.17.040, [49.17.]050 and [49.17.]060. 96-22-048, § 296-306A-09512, filed 10/31/96, effective 12/1/96.]

WAC 296-307-09515 What handwashing facilities must an employer provide? You must provide handwashing facilities for employees engaged in hand-labor operations in the field, without cost to the employee. Handwashing facilities must meet the following requirements:

(1) One handwashing facility with a tap and an adequate supply of water, soap, single-use hand towels, and either a basin or other suitable container for washing is provided for each twenty employees or fraction of twenty.

Note: Nonpotable water must not be used for washing any part of a person, except as permitted by the local health authority.

(2) Each facility has running water.

(3) Each facility has a dispenser containing handsoap or a similar cleansing agent.

(4) Each facility has individual single-use hand towels.

(5) Facilities are maintained in a clean and sanitary condition according to appropriate public health sanitation practices.

(6) Waste receptacles are provided. Disposal of wastes from the facilities does not create a hazard nor cause an unsanitary condition.

(7) Employees are allowed reasonable time during the work period to use the facilities.

(8) Handwashing facilities are near toilet facilities and within one-quarter mile of each employee's worksite in the field.

Exception: Where it is not feasible to locate facilities as required above, the facilities must be located at the point of closest vehicular access.

[97-09-013, recodified as § 296-307-09515, filed 4/7/97, effective 4/7/97. Statutory Authority: RCW 49.17.040, [49.17.]050 and [49.17.]060. 96-22-048, § 296-306A-09515, filed 10/31/96, effective 12/1/96.]

WAC 296-307-09518 What toilet facilities must an employer provide? You must provide toilet facilities for employees engaged in hand-labor operations in the field, without cost to the employee. Toilet facilities must meet the following requirements:

(1) One toilet facility is provided for each twenty employees or fraction of twenty.

(2) You must ensure, at the beginning of each day, that the toilets are inspected. If any toilet facility fails to meet the

requirements of this section, immediate corrective action is taken. Inspections are documented and the record maintained at the worksite for at least seventy-two hours.

(3) Toilet facilities are adequately ventilated; appropriately screened, and have self-closing doors that can be closed and latched from the inside. Toilet facilities are constructed to ensure privacy.

(4) Facilities are maintained in a clean, sanitary, and functional condition and according to appropriate public health sanitation practices.

(5) Toilets are supplied with toilet paper.

(6) Disposal of wastes from the facilities does not create a hazard or cause an unsanitary condition.

(7) Employees are allowed reasonable time during the work period to use the facilities.

(8) Facilities are near handwashing facilities and within one-quarter mile of each employee's worksite in the field.

Exception: Where it is not feasible to locate facilities as required above, the facilities must be located at the point of closest vehicular access.

[97-09-013, recodified as § 296-307-09518, filed 4/7/97, effective 4/7/97. Statutory Authority: RCW 49.17.040, [49.17.]050 and [49.17.]060. 96-22-048, § 296-306A-09518, filed 10/31/96, effective 12/1/96.]

Part H
Personal Protective Equipment

WAC 296-307-100 Personal protective equipment.

[97-09-013, recodified as § 296-307-100, filed 4/7/97, effective 4/7/97. Statutory Authority: RCW 49.17.040, [49.17.]050 and [49.17.]060. 96-22-048, § 296-306A-100, filed 10/31/96, effective 12/1/96.]

WAC 296-307-10005 Who must provide personal protective equipment? (1) You must ensure that employees are protected from injury or impairment of any bodily function that might occur through absorption, inhalation or physical contact of any substance, vapor, radiation, or physical hazard. Wherever appropriate, you must ensure that employees use protective clothing; respiratory devices; shields; barriers; and adequate protective equipment for eyes, face, head, and extremities.

(2) You must provide personal protective equipment at no cost to employees, including replacement due to normal wear and tear. The equipment must be maintained in sanitary and reliable condition.

Exception: You may require employees to provide their own normal work clothing, including long-sleeved shirts, long-legged pants, and socks.

(3) If employees provide their own protective equipment, then you must ensure that the equipment is adequate, properly maintained, and sanitary.

[97-09-013, recodified as § 296-307-10005, filed 4/7/97, effective 4/7/97. Statutory Authority: RCW 49.17.040, [49.17.]050 and [49.17.]060. 96-22-048, § 296-306A-10005, filed 10/31/96, effective 12/1/96.]

WAC 296-307-10010 What requirements apply to eye protection? You must require eye protection wherever employees are exposed to flying objects, welding or cutting glare, injurious liquids, or injurious radiation. Eye protectors must meet the criteria of the American National Standard for Occupational and Educational Eye and Face Protection.

[97-09-013, recodified as § 296-307-10010, filed 4/7/97, effective 4/7/97. Statutory Authority: RCW 49.17.040, [49.17.]050 and [49.17.]060. 96-22-048, § 296-306A-10010, filed 10/31/96, effective 12/1/96.]

WAC 296-307-10015 How must personal protective equipment be used? (1) You must ensure that employees use personal protective equipment according to the manufacturer's instructions.

(2) You must ensure that, before each use, employees inspect all personal protective equipment for leaks, holes, tears, or worn places, and any damaged equipment is repaired or discarded.

(3) The employee must use personal protective equipment according to instructions and training received.

(4) The employee shall notify you of any defects in personal protective equipment or when the equipment becomes contaminated.

[97-09-013, recodified as § 296-307-10015, filed 4/7/97, effective 4/7/97. Statutory Authority: RCW 49.17.040, [49.17.]050 and [49.17.]060. 96-22-048, § 296-306A-10015, filed 10/31/96, effective 12/1/96.]

WAC 296-307-10020 What must an employer do to prevent heat-related illness? You must take appropriate measures to prevent heat-related illness that may be caused by employees wearing any required personal protective equipment.

[97-09-013, recodified as § 296-307-10020, filed 4/7/97, effective 4/7/97. Statutory Authority: RCW 49.17.040, [49.17.]050 and [49.17.]060. 96-22-048, § 296-306A-10020, filed 10/31/96, effective 12/1/96.]

WAC 296-307-10025 What instruction on personal protective equipment must an employer give to employees? You must instruct each employee in the proper use of personal protective equipment. The instruction must include any special limitations or precautions indicated by the manufacturer.

[97-09-013, recodified as § 296-307-10025, filed 4/7/97, effective 4/7/97. Statutory Authority: RCW 49.17.040, [49.17.]050 and [49.17.]060. 96-22-048, § 296-306A-10025, filed 10/31/96, effective 12/1/96.]

Part I: Pesticides (Worker Protection Standard)

WAC 296-307-107 Federal worker protection standards—Washington state department of agriculture. This part contains the federal Environmental Protection Agency worker protection standards as listed in 40 CFR, Part 170. Revisions to the federal language have been incorporated into this chapter in order to be consistent with other requirements of Washington state law. These rules are adopted in conjunction with rules adopted by the Washington state department of agriculture in chapter 16-233 WAC.

[Statutory Authority: RCW 49.17.040. 98-24-096, § 296-307-107, filed 12/1/98, effective 3/1/99. 97-09-013, recodified as § 296-307-107, filed 4/7/97, effective 4/7/97. Statutory Authority: RCW 49.17.040, [49.17.]050 and [49.17.]060. 96-20-082, § 296-306A-107, filed 9/30/96, effective 11/1/96.]

WAC 296-307-110 Scope and purpose—Worker protection standards—40 CFR, § 170.1. This part contains standards designed to reduce the risks of illness or injury resulting from workers' and handlers' occupational exposures to pesticides used in the production of agricultural plants on

farms or in nurseries, greenhouses, and forests and also to reduce the accidental exposure of workers and other persons to such pesticides. It requires workplace practices designed to reduce or eliminate exposure to pesticides and establishes procedures for responding to exposure-related emergencies.

[97-09-013, recodified as § 296-307-110, filed 4/7/97, effective 4/7/97. Statutory Authority: RCW 49.17.040, [49.17.]050 and [49.17.]060. 96-20-082, § 296-306A-110, filed 9/30/96, effective 11/1/96.]

WAC 296-307-11005 Definitions—Worker protection standards—40 CFR, § 170.3. Terms used in this part have the same meanings they have in the Federal Insecticide, Fungicide, and Rodenticide Act, as amended. In addition, the following terms, when used in this part, shall have the following meanings:

"Agricultural emergency" means a sudden occurrence or set of circumstances which the agricultural employer could not have anticipated and over which the agricultural employer has no control, and which requires entry into a pesticide treated area during a restricted-entry interval, when no alternative practices would prevent or mitigate a substantial economic loss.

"Agricultural employer" means any person who hires or contracts for the services of workers, for any type of compensation, to perform activities related to the production of agricultural plants, or any person who is an owner of or is responsible for the management or condition of an agricultural establishment that uses such workers.

Note: This definition does not conflict with the definition of employer in WAC 296-307-012.

"Agricultural establishment" means any farm, forest, nursery, or greenhouse.

"Agricultural plant" means any plant grown or maintained for commercial or research purposes and includes, but is not limited to, food, feed, and fiber plants; trees; turfgrass; flowers, shrubs; ornamentals; and seedlings.

"Animal premise" means the actual structure used to house, cage or confine animals such as: Barns, poultry houses, mink sheds, corrals, or structures used for shelter.

"Chemigation" means the application of pesticides through irrigation systems.

"Commercial pesticide handling establishment" means any establishment, other than an agricultural establishment, that:

• Employs any person, including a self-employed person, to apply on an agricultural establishment, pesticides used in the production of agricultural plants.

• Employs any person, including a self-employed person, to perform on an agricultural establishment, tasks as a crop advisor.

"Crop advisor" means any person who is assessing pest numbers or damage, pesticide distribution, or the status or requirements of agricultural plants and who holds a current Washington state department of agriculture commercial consultant license in the agricultural areas in which they are advising. The term does not include any person who is performing hand labor tasks.

"Early entry" means entry by a worker into a treated area on the agricultural establishment after a pesticide application is complete, but before any restricted-entry interval for the pesticide has expired.

"Farm" means any operation, other than a nursery or forest, engaged in the outdoor production of agricultural plants.

"Forest" means any operation engaged in the outdoor production of any agricultural plant to produce wood fiber or timber products.

"Fumigant" means any pesticide product that is a vapor or gas, or forms a vapor or gas on application, and whose method of pesticidal action is through the gaseous state.

"Greenhouse" means any operation engaged in the production of agricultural plants inside any structure or space that is enclosed with nonporous covering and that is of sufficient size to permit worker entry. This term includes, but is not limited to, polyhouses, mushroom houses, rhubarb houses, and similar structures. It does not include such structures as malls, atriums, conservatories, arboretums, or office buildings where agricultural plants are present primarily for aesthetic or climatic modification.

"Hand labor" means any agricultural activity performed by hand or with hand tools that causes a worker to have substantial contact with surfaces (such as plants, plant parts, or soil) that may contain pesticide residues. These activities include, but are not limited to, harvesting, detasseling, thinning, weeding, topping, planting, sucker removal, pruning, disbudding, roguing, and packing produce into containers in the field. Hand labor does not include operating, moving, or repairing irrigation or watering equipment or performing the tasks of crop advisors.

"Handler" means any person, including a self-employed person:

• Who is employed for any type of compensation by an agricultural establishment or commercial pesticide handling establishment to which WAC 296-307-130 applies and who is:

■ Mixing, loading, transferring, or applying pesticides.

■ Disposing of pesticides or pesticide containers.

■ Handling opened containers of pesticides.

■ Acting as a flagger.

■ Cleaning, adjusting, handling, or repairing the parts of mixing, loading, or application equipment that may contain pesticide residues.

■ Assisting with the application of pesticides.

■ Entering a greenhouse or other enclosed area after the application and before the inhalation exposure level listed in the labeling has been reached or one of the ventilation criteria established by WAC 296-307-12015 (3)(c) or in the labeling has been met:

✦ To operate ventilation equipment.

✦ To adjust or remove coverings used in fumigation.

✦ To monitor air levels.

■ Entering a treated area outdoors after application of any soil fumigant to adjust or remove soil coverings such as tarpaulins.

■ Performing tasks as a crop advisor:

✦ During any pesticide application.

✦ Before the inhalation exposure level listed in the labeling has been reached or one of the ventilation criteria established by WAC 296-307-12015 (3)(c) or in the labeling has been met.

✦ During any restricted-entry interval.

• The term does not include any person who is only handling pesticide containers that have been emptied or cleaned according to pesticide product labeling instructions or, in the absence of such instructions, have been subjected to triple-rinsing or its equivalent.

"Handler employer" means any person who is self-employed as a handler or who employs any handler, for any type of compensation.

"Immediate family" includes only spouse, children, stepchildren, foster children, parents, stepparents, foster parents, brothers, and sisters.

"Nursery" means any operation engaged in the outdoor production of any agricultural plant to produce cut flowers and ferns or plants that will be used in their entirety in another location. Such plants include, but are not limited to, flowering and foliage plants or trees; tree seedlings; live Christmas trees; vegetable, fruit, and ornamental transplants; and turfgrass produced for sod.

"Owner" means any person who has a present possessory interest (fee, leasehold, rental, or other) in an agricultural establishment covered by this chapter. A person who has both leased such agricultural establishment to another person and granted that same person the right and full authority to manage and govern the use of such agricultural establishment is not an owner for purposes of this part.

"Restricted-entry interval" means the time after the end of a pesticide application during which entry into the treated area is restricted.

"Substantial economic loss" means a loss in profitability greater than that which would be expected based on the experience and fluctuations of crop yields in previous years. Only losses caused by the agricultural emergency specific to the affected site and geographic area are considered. The contribution of mismanagement cannot be considered in determining the loss.

"Treated area" means any area to which a pesticide is being directed or has been directed.

"Worker" means any person, including a self-employed person, who is employed for any type of compensation and who is performing activities relating to the production of agricultural plants on an agricultural establishment to which WAC 296-307-120 applies. While persons employed by a commercial pesticide handling establishment are performing tasks as crop advisors, they are not workers covered by the requirements of WAC 296-307-120.

[Statutory Authority: RCW 49.17.040. 98-24-096, § 296-307-11005, filed 12/1/98, effective 3/1/99. 97-09-013, recodified as § 296-307-11005, filed 4/7/97, effective 4/7/97. Statutory Authority: RCW 49.17.040, [49.17.]050 and [49.17.]060. 96-20-082, § 296-306A-11005, filed 9/30/96, effective 11/1/96.]

WAC 296-307-11010 General duties and prohibited actions—Worker protection standards—40 CFR, § 170.7. (1) General duties. The agricultural employer or the handler employer, as appropriate, shall:

(a) Assure that each worker subject to WAC 296-307-120 or each handler subject to WAC 296-307-130 receives the protections required by this part.

(b) Assure that any pesticide to which WAC 296-307-130 applies is used in a manner consistent with the labeling of the pesticide, including the requirements of this part.

(c) Provide, to each person who supervises any worker or handler, information and directions sufficient to assure that each worker or handler receives the protections required by this part. Such information and directions shall specify which persons are responsible for actions required to comply with this part.

(d) Require each person who supervises any worker or handler to assure compliance by the worker or handler with the provisions of this part and to assure that the worker or handler receives the protections required by this part.

(2) Prohibited actions. The agricultural employer or the handler employer shall not take any retaliatory action for attempts to comply with this part or any action having the effect of preventing or discouraging any worker or handler from complying or attempting to comply with any requirement of this part.

[Statutory Authority: RCW 49.17.040. 98-24-096, § 296-307-11010, filed 12/1/98, effective 3/1/99. 97-09-013, recodified as § 296-307-11010, filed 4/7/97, effective 4/7/97. Statutory Authority: RCW 49.17.040, [49.17.]050 and [49.17.]060. 96-20-082, § 296-306A-11010, filed 9/30/96, effective 11/1/96.]

WAC 296-307-11015 Violations of this part—Worker protection standards—40 CFR, § 170.9. (1) RCW 15.58.150 (2)(c) provides that it is unlawful for any person ". . . to use or cause to be used any pesticide contrary to label directions . . .." When 40 CFR, Part 170 is referenced on a label, users must comply with all of its requirements except those that are inconsistent with product specific instructions on the labeling. For purposes of this chapter, the term "use" is interpreted to include:

(a) Preapplication activities, including, but not limited to:

(i) Arranging for the application of the pesticide;

(ii) Mixing and loading the pesticide; and

(iii) Making necessary preparations for the application of the pesticide, including responsibilities related to worker notification, training of handlers, decontamination, use and care of personal protective equipment, emergency information, and heat stress management.

(b) Application of the pesticide.

(c) Post-application activities necessary to reduce the risks of illness and injury resulting from handlers' and workers' occupational exposures to pesticide residues during the restricted-entry interval plus thirty days. These activities include, but are not limited to, responsibilities related to worker training, notification, and decontamination.

(d) Other pesticide-related activities, including, but not limited to, providing emergency assistance, transporting or storing pesticides that have been opened, and disposing of excess pesticides, spray mix, equipment wash waters, pesticide containers, and other pesticide-containing materials.

(2) A person who has a duty under this chapter, as referenced on the pesticide product label, and who fails to perform that duty, violates RCW 15.58.330 and 17.21.315, and is subject to civil penalties under RCW 15.58.335, 15.58.260 and 17.21.315.

(3) FIFRA section 14 (b)(4) provides that a person is liable for a penalty under FIFRA if another person employed by or acting for that person violates any provision of FIFRA.

The term "acting for" includes both employment and contractual relationships.

(4) The requirements of this chapter, including the decontamination requirements, shall not, for the purposes of section 653 (b)(1) of Title 29 of the U.S. Code, be deemed to be the exercise of statutory authority to prescribe or enforce standards or regulations affecting the general sanitary hazards addressed by Field Sanitation, WAC 296-307-095, or other agricultural, nonpesticide hazards.

[Statutory Authority: RCW 49.17.010, 49.17.040, 49.17.050, 49.17.060. 05-01-166, § 296-307-11015, filed 12/21/04, effective 4/2/05. 97-09-013, recodified as § 296-307-11015, filed 4/7/97, effective 4/7/97. Statutory Authority: RCW 49.17.040, [49.17.]050 and [49.17.]060. 96-20-082, § 296-306A-11015, filed 9/30/96, effective 11/1/96.]

Standard for Workers

WAC 296-307-120 Applicability of this section—Standards for workers—40 CFR, § 170.102. Requirement. Except as provided by WAC 296-307-12005 and 296-307-12010, WAC 296-307-120 applies when any pesticide product is used on an agricultural establishment in the production of agricultural plants.

[Statutory Authority: RCW 49.17.040. 98-24-096, § 296-307-120, filed 12/1/98, effective 3/1/99. 97-09-013, recodified as § 296-307-120, filed 4/7/97, effective 4/7/97. Statutory Authority: RCW 49.17.040, [49.17.]050 and [49.17.]060. 96-20-082, § 296-306A-120, filed 9/30/96, effective 11/1/96.]

WAC 296-307-12005 Exceptions—Standards for workers—40 CFR, § 170.103. This section does not apply when any pesticide is applied on an agricultural establishment in the following circumstances:

(1) For mosquito abatement, Mediterranean fruit fly eradication, or similar wide-area public pest control programs sponsored by governmental entities.

(2) On livestock or other animals, or in or about animal premises.

(3) On plants grown for other than commercial or research purposes, which may include plants in habitations, home fruit and vegetable gardens, and home greenhouses.

(4) On plants that are in ornamental gardens, parks, and public or private lawns and grounds that are intended only for aesthetic purposes or climatic modification.

(5) By injection directly into agricultural plants. Direct injection does not include "hack and squirt," "frill and spray," chemigation, soil-incorporation, or soil-injection.

(6) In a manner not directly related to the production of agricultural plants, including, but not limited to, structural pest control, control of vegetation along rights of way and in other noncrop areas, and pasture and rangeland use.

(7) For control of vertebrate pests.

(8) As attractants or repellents in traps.

(9) On the harvested portions of agricultural plants or on harvested timber.

(10) For research uses of unregistered pesticides.

[97-09-013, recodified as § 296-307-12005, filed 4/7/97, effective 4/7/97. Statutory Authority: RCW 49.17.040, [49.17.]050 and [49.17.]060. 96-20-082, § 296-306A-12005, filed 9/30/96, effective 11/1/96.]

WAC 296-307-12010 Exemptions—Standards for workers—40 CFR, § 170.104. The workers listed in this section are exempt from the specified provisions of WAC 296-307-120.

(1) Owners of agricultural establishments.

(a) The owner of an agricultural establishment is not required to provide to himself/herself or members of his/her immediate family who are performing tasks related to the production of agricultural plants on their own agricultural establishment the protections of:

(i) WAC 296-307-12020 (3)(e) through (i);

(ii) WAC 296-307-12020 (3)(e) through (i); as referenced in WAC 296-307-12020 (4)(b)(iii) and (5);

(iii) WAC 296-307-12025;

(iv) WAC 296-307-12030;

(v) WAC 296-307-12040;

(vi) WAC 296-307-12045;

(vii) WAC 296-307-12050;

(viii) WAC 296-307-12055.

(b) The owner of the agricultural establishment must provide the protections listed in (a)(i) through (viii) of this subsection to other workers and other persons who are not members of his/her immediate family.

(2) Crop advisors.

(a) Provided that the conditions of this section are met, a person who is certified or licensed as a crop advisor by a program acknowledged as appropriate in writing by EPA or a state or tribal lead agency for pesticide enforcement, and persons performing crop advising tasks under such qualified crop advisor's direct supervision, are exempt from the provisions of:

(i) WAC 296-307-12050.

(ii) WAC 296-307-12055.

A person is under the direct supervision of a crop advisor when the crop advisor exerts the supervisory controls set out in (b)(iii) and (iv) of this subsection. Direct supervision does not require that the crop advisor be physically present at all times, but the crop advisor must be readily accessible to the employees at all times.

(b) Conditions of exemption.

(i) The certification or licensing program requires pesticide safety training that includes, at least, all the information in WAC 296-307-13025 (3)(d).

(ii) Applies only when performing crop advising tasks in the treated area.

(iii) The crop advisor must make specific determinations regarding the appropriate PPE, appropriate decontamination supplies, and how to conduct the tasks safely. The crop advisor must convey this information to each person under his direct supervision in a language that the person understands.

(iv) Before entering a treated area, the certified or licensed crop advisor must inform, through an established practice of communication, each person under his/her direct supervision of the pesticide product and active ingredient(s) applied, method of application, time of application, the restricted entry interval which tasks to undertake, and how to contact the crop advisor.

[Statutory Authority: RCW 49.17.040. 98-24-096, § 296-307-12010, filed 12/1/98, effective 3/1/99. 97-09-013, recodified as § 296-307-12010, filed 4/7/97, effective 4/7/97. Statutory Authority: RCW 49.17.040, [49.17.]050

and [49.17.]060. 96-20-082, § 296-306A-12010, filed 9/30/96, effective 11/1/96.]

WAC 296-307-12015 Restrictions associated with pesticide applications—Standards for workers—40 CFR, § 170.110. (1) Farms and forests. During the application of any pesticide on a farm or in a forest, the agricultural employer shall not allow or direct any person, other than an appropriately trained and equipped handler, to enter or to remain in the treated area.

(2) Nurseries. In a nursery, during any pesticide application described in column A of Table 1 of this section, the agricultural employer shall not allow or direct any person, other than an appropriately trained and equipped handler, to enter or to remain in the area specified in column B of Table 1 of this section. After the application is completed, until the end of any restricted-entry interval, the entry-restricted area is the treated area.

Table 1.—Entry-Restricted Areas in Nurseries During Pesticide Applications

A. During Application of a Pesticide:	B. Workers are Prohibited in:
(1)(a) Applied: (i) Aerially, or (ii) In an upward direction, or (iii) Using a spray pressure greater than 150 psi, or (b) Applied as a: (i) Fumigant, or (ii) Smoke, or (iii) Mist, or (iv) Fog, or (v) Aerosol.	Treated area plus 100 feet in all directions on the nursery
(2)(a) Applied downward using: (i) A height of greater than 12 inches from the planting medium, or (ii) A fine spray, or (iii) A spray pressure greater than 40 psi and less than 150 psi. (b) Not as in 1 or 2(a) above but for which a respiratory protection device is required for application by the product labeling.	Treated area plus 25 feet in all directions on the nursery
(3) Applied otherwise.	Treated area

(3) Greenhouses.

(a) When a pesticide application described in column A of Table 2 under (d) of this subsection takes place in a greenhouse, the agricultural employer shall not allow or direct any person, other than an appropriately trained and equipped handler, to enter or to remain in the area specified in column B of Table 2 until the time specified in column C of Table 2 has expired.

(b) After the time specified in column C of Table 2 under (d) of this subsection has expired, until the expiration of any restricted-entry interval, the agricultural employer shall not allow or direct any worker to enter or to remain in the treated area as specified in column D of Table 2 under (d) of this subsection, except as provided in WAC 296-307-12020.

(c) When column C of Table 2 under (d) of this subsection specifies that ventilation criteria must be met, ventilation shall continue until the air concentration is measured to be equal to or less than the inhalation exposure level the labeling requires to be achieved. If no inhalation exposure level is listed on the labeling, ventilation shall continue until after:

(i) Ten air exchanges are completed; or

(ii) Two hours of ventilation using fans or other mechanical ventilating systems; or

(iii) Four hours of ventilation using vents, windows or other passive ventilation; or

(iv) Eleven hours with no ventilation followed by one hour of mechanical ventilation; or

(v) Eleven hours with no ventilation followed by two hours of passive ventilation; or

(vi) Twenty-four hours with no ventilation.

(d) The following Table 2 applies to (a), (b) and (c) of this subsection.

Table 2.—Greenhouse Entry Restrictions Associated With Pesticide Applications

A. When a Pesticide is Applied:	B. Workers are Prohibited in:	C. Until:	D. After the Expiration of Time in Column C Until the Restricted-Entry Interval Expires, the Entry-Restricted Area is:
(1) As a fumigant	Entire greenhouse plus any adjacent structure that cannot be sealed off from the treated area	The ventilation criteria of (c) of this subsection are met	No entry restrictions after criteria in column C are met
(2) As a: (i) Smoke, or (ii) Mist, or (iii) Fog, or (iv) Aerosol	Entire enclosed area	The ventilation criteria of (c) of this subsection are met	Entire enclosed area is the treated area
(3) Not in 1 or 2 above, and for which a respiratory protection device is required for application by the product labeling	Entire enclosed area	The ventilation criteria of (c) of this subsection are met	Treated area
(4) Not in 1, 2, or 3 above, and: (i) From a height of greater than 12 in. from the planting medium, or (ii) As a fine spray, or (iii) Using a spray pressure greater than 40 psi	Treated area plus 25 feet in all directions in the enclosed area	Application is complete	Treated area
(5) Otherwise	Treated area	Application is complete	Treated area

[Statutory Authority: RCW 49.17.040. 98-24-096, § 296-307-12015, filed 12/1/98, effective 3/1/99. 97-09-013, recodified as § 296-307-12015, filed 4/7/97, effective 4/7/97. Statutory Authority: RCW 49.17.040, [49.17.]050 and [49.17.]060. 96-20-082, § 296-306A-12015, filed 9/30/96, effective 11/1/96.]

WAC 296-307-12020 Entry restrictions—Standards for workers—40 CFR, § 170.112. (1) General restrictions.

(a) After the application of any pesticide on an agricultural establishment, the agricultural employer shall not allow or direct any worker to enter or to remain in the treated area before the restricted-entry interval specified on the pesticide labeling has expired, except as provided in this section.

(b) Entry-restricted areas in greenhouses are specified in column D in Table 2 under WAC 296-307-12015 (3)(d).

(c) When two or more pesticides are applied at the same time, the restricted-entry interval shall be the longest of the applicable intervals.

(d) The agricultural employer shall assure that any worker who enters a treated area under a restricted-entry interval as permitted by subsections (3), (4), and (5) of this section uses the personal protective equipment specified in the product labeling for early entry workers and follows any other requirements on the pesticide labeling regarding early entry.

(2) Exception for activities with no contact. A worker may enter a treated area during a restricted-entry interval if the agricultural employer assures that both of the following are met:

(a) The worker will have no contact with anything that has been treated with the pesticide to which the restricted-entry interval applies, including, but not limited to, soil, water, air, or surfaces of plants; and

(b) No such entry is allowed until any inhalation exposure level listed in the labeling has been reached or any ventilation criteria established by WAC 296-307-12015 (3)(c) or in the labeling have been met.

(3) Exception for short-term activities. A worker may enter a treated area during a restricted-entry interval for short-term activities if the agricultural employer assures that the following requirements are met:

(a) No hand labor activity is performed.

(b) The time in treated areas under a restricted-entry interval for any worker does not exceed one hour in any twenty-four-hour period.

(c) No such entry is allowed for the first four hours following the end of the application, and no such entry is allowed thereafter until any inhalation exposure level listed in the labeling has been reached or any ventilation criteria established by WAC 296-307-12015 (3)(c) or in the labeling have been met.

(d) The personal protective equipment specified on the product labeling for early entry is provided to the worker. Such personal protective equipment shall conform to the following standards:

(i) Personal protective equipment (PPE) means devices and apparel that are worn to protect the body from contact with pesticides or pesticide residues, including, but not limited to, coveralls, chemical-resistant suits, chemical-resistant gloves, chemical-resistant footwear, respiratory protection devices, chemical-resistant aprons, chemical-resistant headgear, and protective eyewear.

(ii) Long-sleeved shirts, short-sleeved shirts, long pants, short pants, shoes, socks, and other items of work clothing are not considered personal protective equipment for the purposes of this section and are not subject to the requirements of this section, although pesticide labeling may require that such work clothing be worn during some activities.

(iii) When "chemical-resistant" personal protective equipment is specified by the product labeling, it shall be made of material that allows no measurable movement of the pesticide being used through the material during use.

(iv) When "waterproof" personal protective equipment is specified by the product labeling, it shall be made of material that allows no measurable movement of water or aqueous solutions through the material during use.

(v) When a "chemical-resistant suit" is specified by the product labeling, it shall be a loose-fitting, one-piece or two-piece, chemical-resistant garment that covers, at a minimum, the entire body except head, hands, and feet.

(vi) When "coveralls" are specified by the product labeling, they shall be a loose-fitting, one-piece or two-piece garment, such as a cotton or cotton and polyester coverall, that covers, at a minimum, the entire body except head, hands, and feet. The pesticide product labeling may specify that the coveralls be worn over a layer of clothing. If a chemical-resistant suit is substituted for coveralls, it need not be worn over a layer of clothing.

(vii) Gloves shall be of the type specified by the product labeling. Gloves or glove linings made of leather, cotton, or other absorbent materials must not be worn for early entry activities unless these materials are listed on the product labeling as acceptable for such use. If chemical-resistant gloves with sufficient durability and suppleness are not obtainable for tasks with roses or other plants with sharp thorns, leather gloves may be worn over chemical-resistant liners. However, once leather gloves have been worn for this use, thereafter they shall be worn only with chemical-resistant liners and they shall not be worn for any other use.

(viii) When "chemical-resistant footwear" is specified by the product labeling, it shall be one of the following types of footwear: Chemical-resistant shoes, chemical-resistant boots, or chemical-resistant shoe coverings worn over shoes or boots. If chemical-resistant footwear with sufficient durability and a tread appropriate for wear in rough terrain is not obtainable for workers, then leather boots may be worn in such terrain.

(ix) When "protective eyewear" is specified by the product labeling, it shall be one of the following types of eyewear: Goggles; face shield; safety glasses with front, brow, and temple protection; or a full-face respirator.

(x) When "chemical-resistant headgear" is specified by the product labeling, it shall be either a chemical-resistant hood or a chemical-resistant hat with a wide brim.

(e) The agricultural employer shall assure that the worker, before entering the treated area, either has read the product labeling or has been informed, in a manner that the worker can understand, of all labeling requirements related to human hazards or precautions, first aid, symptoms of poisoning, personal protective equipment specified for early entry, and any other labeling requirements related to safe use.

(f) The agricultural employer shall assure that:

(i) Workers wear the personal protective equipment correctly for its intended purpose and use personal protective equipment according to manufacturer's instructions.

(ii) Before each day of use, all personal protective equipment is inspected for leaks, holes, tears, or worn places, and any damaged equipment is repaired or discarded.

(iii) Personal protective equipment that cannot be cleaned properly is disposed of in accordance with any applicable federal, state, and local regulations.

(iv) All personal protective equipment is cleaned according to manufacturer's instructions or pesticide product labeling instructions before each day of reuse. In the absence of any such instructions, it shall be washed thoroughly in detergent and hot water.

(v) Before being stored, all clean personal protective equipment is dried thoroughly or is put in a well-ventilated place to dry.

(vi) Personal protective equipment contaminated with pesticides is kept separately and washed separately from any other clothing or laundry.

(vii) Any person who cleans or launders personal protective equipment is informed that such equipment may be contaminated with pesticides, of the potentially harmful effects of exposure to pesticides, and of the correct way(s) to handle and clean personal protective equipment and to protect themselves when handling equipment contaminated with pesticides.

(viii) All clean personal protective equipment is stored separately from personal clothing and apart from pesticide-contaminated areas.

(ix) Each worker is instructed how to put on, use, and remove the personal protective equipment and is informed about the importance of washing thoroughly after removing personal protective equipment.

(x) Each worker is instructed in the prevention, recognition, and first-aid treatment of heat-related illness.

(xi) Workers have a clean place(s) away from pesticide-storage and pesticide-use areas for storing personal clothing not in use; putting on personal protective equipment at the start of any exposure period; and removing personal protective equipment at the end of any exposure period.

(g) When personal protective equipment is required by the labeling of any pesticide for early entry, the agricultural employer shall assure that no worker is allowed or directed to perform the early entry activity without implementing, when appropriate, measures to prevent heat-related illness.

(h) During any early entry activity, the agricultural employer shall provide a decontamination site in accordance with WAC 296-307-12050.

(i) The agricultural employer shall not allow or direct any worker to wear home or to take home personal protective equipment contaminated with pesticides.

(4) Declaration of an agricultural emergency.

(a) The director of the Washington state department of agriculture may declare the existence of circumstances caus-

ing an agricultural emergency on a particular establishment or establishments.

(b) The director may declare an agricultural emergency based on the reasonably expected certainty of circumstances occurring based on weather or other forecasts that would create conditions that would normally be anticipated to cause an agricultural emergency.

(c) The agricultural employer may determine if the establishment under his/her control is subject to the agricultural emergency declared by the director.

(d) Emergency repair of equipment that is in use and sited within a pesticide treated area under a restricted-entry interval, such as frost protection devices, shall be considered to be an agricultural emergency. The conditions in WAC 16-228-655 shall be met.

(e) Activities that require immediate response such as fire suppression, relocation of greenhouse plants due to power failure, and similar conditions, shall be considered to be agricultural emergencies. The conditions in WAC 16-228-655 shall be met.

(5) Agricultural activities permitted under an agricultural emergency.

(a) A worker may enter a pesticide treated area under a restricted-entry interval in an agricultural emergency to perform tasks, including hand labor tasks, necessary to mitigate the effects of the agricultural emergency if the agricultural employer assures that all the following requirements are met:

(i) No entry is permitted for the first four hours after the pesticide application or the minimum reentry interval allowed by EPA for that product, whichever is less;

(ii) The personal protective equipment specified on the product labeling for early entry is provided to the worker;

(iii) The agricultural employer shall assure that the worker, before entering the treated area, either has read the product labeling or has been informed, in a manner the worker can understand, of all labeling requirements related to human hazards or precautions, first aid, symptoms of poisoning, personal protective equipment specified for early entry, and any other labeling requirements related to safe use;

(iv) The agricultural employer shall assure that the worker wears the proper PPE and that the PPE is in operable condition and that the worker has been trained in its proper use;

(v) The agricultural employer shall assure that measures have been taken, when appropriate, to prevent heat-related illness;

(vi) A decontamination site has been provided in accordance with EPA regulations;

(vii) The agricultural employer shall not allow or direct any worker to wear home or take home personal protective equipment contaminated with pesticides.

(b) If the agricultural emergency is due to equipment failure, then the agricultural employer shall assure that all the requirements in subsection (1) of this section are met plus the following additional requirement. The only permitted activity until the restricted-entry interval has elapsed is equipment repair that would mitigate the effect of the equipment failure.

(6) Recordkeeping required for agricultural emergencies.

(a) If the employer declares that his/her establishment is affected by an agricultural emergency and that activities regulated by the worker protection standard have been performed, the employer shall keep the following records for seven years from the date of the agricultural emergency:

(i) Date of the agricultural emergency;

(ii) Time of the agricultural emergency, start and end;

(iii) Reason for the agricultural emergency, such as frost, fire, equipment failure, etc.;

(iv) Crop/site;

(v) Pesticide(s) - name, EPA number, REI;

(vi) Name, date, time of entry and exit of early entry person(s);

(vii) Estimated potential of economic loss which would have occurred had no early entry been allowed.

(b) Records shall be completed within twenty-four hours of the early entry exposure and be available to the department and/or department of health and/or medical facility or treating physician if requested by the above or the employee.

(7) Exception to entry restrictions requiring EPA approval. EPA may in accordance with 40 CFR, Part 170.112 (e) grant an exception from the requirements of this section. A request for an exception must be submitted to the Director, Office of Pesticide Programs (H-7501C), Environmental Protection Agency, 401 "M" Street SW, Washington, DC 20460 and must be accompanied by two copies of the information specified in 40 CFR, Part 170.112(e).

[Statutory Authority: RCW 49.17.040. 98-24-096, § 296-307-12020, filed 12/1/98, effective 3/1/99. 97-09-013, recodified as § 296-307-12020, filed 4/7/97, effective 4/7/97. Statutory Authority: RCW 49.17.040, [49.17.]050 and [49.17.]060. 96-20-082, § 296-306A-12020, filed 9/30/96, effective 11/1/96.]

WAC 296-307-12025 Notice of applications—Standards for workers—40 CFR, § 170.120. (1) Notification to workers of pesticide applications in greenhouses. The agricultural employer shall notify workers of any pesticide application in the greenhouse in accordance with this subsection.

(a) All pesticide applications shall be posted in accordance with subsection (3) of this section.

(b) If the pesticide product labeling has a statement requiring both the posting of treated areas and oral notification to workers, the agricultural employer shall also provide oral notification of the application to the worker in accordance with subsection (4) of this section.

(c) Notice need not be given to a worker if the agricultural employer can assure that one of the following is met:

(i) From the start of the application until the end of the application and during any restricted-entry interval, the worker will not enter, work in, remain in, or pass through the greenhouse; or

(ii) The worker applied (or supervised the application of) the pesticide for which the notice is intended and is aware of all information required by subsection (4)(a) through (c) of this section.

(2) Notification to workers on farms, in nurseries, or in forests of pesticide applications. The agricultural employer shall notify workers of any pesticide application on the farm or in the nursery or forest in accordance with this subsection.

(a) If the pesticide product labeling has a statement requiring both the posting of treated areas and oral notification to workers, the agricultural employer shall post signs in accordance with subsection (3) of this section and shall pro-

vide oral notification of the application to the worker in accordance with subsection (4) of this section.

(b) For any pesticide other than those for which the labeling requires both posting and oral notification of applications, the agricultural employer shall give notice of the application to the worker either by the posting of warning signs in accordance with subsection (3) of this section or orally in accordance with subsection (4) of this section, and shall inform the workers as to which method of notification is in effect.

(c) Notice need not be given to a worker if the agricultural employer can assure that one of the following is met:

(i) From the start of the application until the end of the application and during any restricted-entry interval, the worker will not enter, work in, remain in, or pass through on foot the treated area or any area within one-quarter mile of the treated area; or

(ii) The worker applied (or supervised the application of) the pesticide for which the notice is intended and is aware of all information required by subsection (4)(a) through (c) of this section.

(3) Posted warning signs. The agricultural employer shall post warning signs in accordance with the following criteria:

(a) The warning sign shall have a background color that contrasts with red. The words "DANGER" and "PELIGRO," plus "PESTICIDES" and "PESTICIDAS," shall be at the top of the sign, and the words "KEEP OUT" and "NO ENTRE" shall be at the bottom of the sign. Letters for all words must be clearly legible. A circle containing an upraised hand on the left and a stern face on the right must be near the center of the sign. The inside of the circle must be red, except that the hand and a large portion of the face must be in a shade that contrasts with red. The length of the hand must be at least twice the height of the smallest letters. The length of the face must be only slightly smaller than the hand. Additional information such as the name of the pesticide and the date of application may appear on the warning sign if it does not detract from the appearance of the sign or change the meaning of the required information. A black and white example of a warning sign meeting these requirements, other than the size requirements, follows:

(b) The standard sign shall be at least fourteen inches by sixteen inches with letters at least one inch in height. Farms and forests shall use the standard size sign unless a smaller sign is necessary because the treated area is too small to accommodate a sign of this size. In nurseries and greenhouses, the agricultural employer may, at any time, use a sign smaller than the standard size sign. Whenever a small sign is used on any establishment, there are specific posting distances depending on the size of the lettering and symbol on the sign. If a sign is used with DANGER and PELIGRO in letters at least 7/8 inch in height and the remaining letters at least 1/2 inch and a red circle at least three inches in diameter containing an upraised hand and a stern face, the signs shall be no further than fifty feet apart. If a sign is used with DANGER and PELIGRO in letters at least 7/16 inch in height and the remaining letters at least 1/4 inch in height and a red circle at least 1 1/2 inches in diameter containing an upraised hand and stern face, the signs shall be no further than twenty-five feet apart. A sign with DANGER and PELIGRO in letters less than 7/16 inch in height or with any words in letters less than 1/4 inch in height, or a red circle smaller than 1 1/2 inches in diameter containing an upraised hand and a stern face will not satisfy the requirements of the rule. All signs must meet the requirements of (a) of this subsection.

(c) The employer may replace the Spanish portion of the warning sign with a non-English language read by the largest group of workers who do not read English. The replacement sign must be in the same format as the original sign and must be visible and legible.

(d) On farms and in forests and nurseries, the signs shall be visible from all usual points of worker entry to the treated area, including at least each access road, each border with any labor camp adjacent to the treated area, and each footpath and other walking route that enters the treated area. When there are no usual points of worker entry, signs shall be posted in

the corners of the treated area or in any other location affording maximum visibility.

(e) In greenhouses, the signs shall be posted so they are visible from all usual points of worker entry to the treated area including each aisle or other walking route that enters the treated area. When there are no usual points of worker entry to the treated area, signs shall be posted in the corners of the treated area or in any other location affording maximum visibility.

(f) The signs shall:

(i) Be posted no sooner than twenty-four hours before the scheduled application of the pesticide.

(ii) Remain posted throughout the application and any restricted-entry interval.

(iii) Be removed within three days after the end of the application and any restricted-entry interval and before agricultural-worker entry is permitted, other than entry permitted by WAC 296-307-12020.

(g) The signs shall remain visible and legible during the time they are posted.

(h) When several contiguous areas are to be treated with pesticides on a rotating or sequential basis, the entire area may be posted. Worker entry, other than entry permitted by WAC 296-307-12020, is prohibited for the entire area while the signs are posted.

(4) Oral warnings. The agricultural employer shall provide oral warnings to workers in a manner that the worker can understand. If a worker will be on the premises during the application, the warning shall be given before the application takes place. Otherwise, the warning shall be given at the beginning of the worker's first work period during which the application is taking place or the restricted-entry interval for the pesticide is in effect. The warning shall consist of:

(a) The location and description of the treated area.

(b) The time during which entry is restricted.

(c) Instructions not to enter the treated area until the restricted-entry interval has expired.

[Statutory Authority: RCW 49.17.040. 98-24-096, § 296-307-12025, filed 12/1/98, effective 3/1/99. 97-09-013, recodified as § 296-307-12025, filed 4/7/97, effective 4/7/97. Statutory Authority: RCW 49.17.040, [49.17.]050 and [49.17.]060. 96-20-082, § 296-306A-12025, filed 9/30/96, effective 11/1/96.]

WAC 296-307-12030 Providing specific information about applications—Standards for workers—40 CFR, § 170.122. When workers are on an agricultural establishment and, within the last thirty days, a pesticide covered by this part has been applied on the establishment or a restricted-entry interval has been in effect, the agricultural employer shall display, in accordance with this section, specific information about the pesticide.

(1) Location, accessibility, and legibility. The information shall be displayed in the location specified for the pesticide safety poster in WAC 296-307-12045(4) and shall be accessible and legible, as specified in WAC 296-307-12045 (4) and (6).

(2) Timing.

(a) If warning signs are posted for the treated area before an application, the specific application information for that application shall be posted at the same time or earlier.

(b) The information shall be posted before the application takes place, if workers will be on the establishment during application. Otherwise, the information shall be posted at the beginning of any worker's first work period.

(c) The information shall continue to be displayed for at least thirty days after the end of the restricted-entry interval (or, if there is no restricted-entry interval, for at least thirty days after the end of the application) or at least until workers are no longer on the establishment, whichever is earlier.

(3) Required information. The information shall include:

(a) The location and description of the treated area.

(b) The product name, EPA registration number, and active ingredient(s) of the pesticide.

(c) The time and date the pesticide is to be applied.

(d) The restricted-entry interval for the pesticide.

[Statutory Authority: RCW 49.17.040. 98-24-096, § 296-307-12030, filed 12/1/98, effective 3/1/99. 97-09-013, recodified as § 296-307-12030, filed 4/7/97, effective 4/7/97. Statutory Authority: RCW 49.17.040, [49.17.]050 and [49.17.]060. 96-20-082, § 296-306A-12030, filed 9/30/96, effective 11/1/96.]

WAC 296-307-12035 Notice of applications to handler employers—Standards for workers—40 CFR, § 170.124. Whenever handlers who are employed by a commercial pesticide handling establishment will be performing pesticide handling tasks on an agricultural establishment, the agricultural employer shall provide to the handler employer, or assure that the handler employer is aware of, the following information concerning any areas on the agricultural establishment that the handler may be in (or may walk within one-quarter mile of) and that may be treated with a pesticide or that may be under a restricted-entry interval while the handler will be on the agricultural establishment:

(1) Specific location and description of any such areas; and

(2) Restrictions on entering those areas.

[97-09-013, recodified as § 296-307-12035, filed 4/7/97, effective 4/7/97. Statutory Authority: RCW 49.17.040, [49.17.]050 and [49.17.]060. 96-20-08, § 296-306A-12035, filed 9/30/96, effective 11/1/96.]

WAC 296-307-12040 Pesticide safety training—Standards for workers—40 CFR, § 170.130. (1) General requirement.

(a) Agricultural employer assurance. The agricultural employer shall assure that each worker, required by this section to be trained, has been trained according to this section during the last five years, counting from the end of the month in which the training was completed.

Note: In addition to the training required by this section, the agricultural employer shall assure without exception, that all employees are trained in accordance with WAC 296-307-550, Employer chemical hazard communication.

(b) Requirement for workers performing early entry activities. Before a worker enters a treated area on the agricultural establishment during a restricted-entry interval to perform early entry activities permitted by WAC 296-307-12020 and contacts anything that has been treated with the pesticide to which the restricted-entry interval applies, including but not limited to, soil, water, or surfaces of plants, the agricultural employer shall assure that the worker has been trained.

(c) Requirements for other agricultural workers.

(i) Information before entry. Except as provided in (b) of this subsection, before a worker enters any areas on the agricultural establishment where, within the last thirty days a pesticide to which this part applies has been applied or the restricted-entry interval for such pesticide has been in effect, the agricultural employer shall assure that the worker has been provided the pesticide safety information specified in subsection (3) of this section, in a manner that agricultural workers can understand, such as by providing written materials or oral communication or by other means. The agricultural employer must be able to verify compliance with this requirement.

(ii) Training before the start of a work period. The agricultural employer shall assure that a worker has been trained before the worker enters any areas on the agricultural establishment where, within the last thirty days a pesticide to which this chapter applies has been applied or a restricted-entry interval for such pesticide has been in effect, the agricultural employer shall assure that the worker has been trained.

(2) Exceptions. The following persons need not be trained under this section:

(a) A worker who is currently certified as an applicator of restricted-use pesticides under chapter 17.21 RCW.

(b) A worker who satisfies the training requirements of chapter 17.21 RCW.

(c) A worker who satisfies the handler training requirements of WAC 296-307-13025(3).

(d) A worker who is certified or licensed as a crop advisor by the Washington state department of agriculture under RCW 15.58.230: Provided, That a requirement for such certification or licensing is pesticide safety training that includes all the information set out in WAC 296-307-13025 (3)(d).

(3) Training programs.

(a) General pesticide safety information shall be presented to workers either orally from written materials or audiovisually. The information must be presented in a manner that the workers can understand (such as through a translator) using nontechnical terms. The presenter also shall respond to workers' questions.

(b) The person who conducts the training shall meet at least one of the following criteria:

(i) Be currently certified as an applicator of restricted-use pesticides under chapter 17.21 RCW; or

(ii) Be currently designated as a trainer of certified applicators or pesticide handlers by the Washington state department of agriculture in accordance with chapters 15.58 and 17.21 RCW; or

(iii) Have completed a pesticide safety train-the-trainer program approved by the Washington state department of agriculture in accordance with chapters 15.58 and 17.21 RCW; or

(iv) Satisfy the training requirements in WAC 296-307-13025(3).

(c) Any person who issues a Washington state department of agriculture-approved Worker Protection Standard worker training card must assure that the worker who receives the training card has been trained in accordance with subsection (4)(d) of this section.

(d) The training materials shall convey, at a minimum, the following information:

(i) Where and in what form pesticides may be encountered during work activities.

(ii) Hazards of pesticides resulting from toxicity and exposure, including acute and chronic effects, delayed effects, and sensitization.

(iii) Routes through which pesticides can enter the body, including information on wearing work clothing that protects the body from pesticide residues.

(iv) Signs and symptoms of common types of pesticide poisoning.

(v) Emergency first aid for pesticide injuries or poisonings.

(vi) How to obtain emergency medical care.

(vii) Routine and emergency decontamination procedures, including preventing pesticides from entering the body by:

■ Emergency eyeflushing techniques;

■ Washing work clothes separately from other clothes before wearing them again;

■ Washing before eating, drinking, using chewing gum or tobacco, or using the toilet;

■ Washing/showering with soap and water, shampooing hair, and putting on clean clothes after work; and

■ Washing immediately in the nearest clean water if pesticides are spilled on the body. As soon as possible shower, shampoo, and change into clean clothes.

(viii) Hazards from chemigation and drift.

(ix) Hazards from pesticide residues on clothing.

(x) Warnings about taking pesticides or pesticide containers home.

(xi) Requirements of this part designed to reduce the risks of illness or injury resulting from workers' occupational exposure to pesticides, including application and entry restrictions, the design of the warning sign, posting of warning signs, oral warnings, the availability of specific information about applications, and the protection against retaliatory acts.

(4) Verification of training.

(a) Except as provided in subsection (4)(b) of this section, if the agricultural employer assures that a worker possesses a Washington state department of agriculture-approved Worker Protection Standard worker training card, then the requirements of subsection (1) of this section will have been met.

(b) If the agricultural employer is aware or has reason to know that a Washington state department of agriculture-approved Worker Protection Standard worker training card has not been issued in accordance with this section, or has not been issued to the worker bearing the card, or the training was completed more than five years before the beginning of the current month, a worker's possession of that certificate does not meet the requirements of subsection (1) of this section.

[Statutory Authority: RCW 49.17.010, [49.17].040, and [49.17].050. 01-17-033, § 296-307-12040, filed 8/8/01, effective 9/1/01. Statutory Authority: RCW 49.17.040. 98-24-096, § 296-307-12040, filed 12/1/98, effective 3/1/99. 97-09-013, recodified as § 296-307-12040, filed 4/7/97, effective 4/7/97. Statutory Authority: RCW 49.17.040, [49.17.]050 and [49.17.]060. 96-20-082, § 296-306A-12040, filed 9/30/96, effective 11/1/96.]

WAC 296-307-12045 Posted pesticide safety information—Standards for workers—40 CFR, § 170.135. (1) Requirement. When workers are on an agricultural establishment and, within the last thirty days, a pesticide covered by this part has been applied on the establishment or a restricted-entry interval has been in effect, the agricultural employer shall display, in accordance with this section, pesticide safety information.

(2) Pesticide safety poster. A safety poster must be displayed that conveys, at a minimum, the following basic pesticide safety concepts:

(a) Help keep pesticides from entering your body. At a minimum, the following points shall be conveyed:

(i) Avoid getting on your skin or into your body any pesticides that may be on plants and soil, in irrigation water, or drifting from nearby applications.

(ii) Wash before eating, drinking, using chewing gum or tobacco, or using the toilet.

(iii) Wear work clothing that protects the body from pesticide residues (long-sleeved shirts, long pants, shoes and socks, and a hat or scarf).

(iv) Wash/shower with soap and water, shampoo hair, and put on clean clothes after work.

(v) Wash work clothes separately from other clothes before wearing them again.

(vi) Wash immediately in the nearest clean water if pesticides are spilled or sprayed on the body. As soon as possible, shower, shampoo, and change into clean clothes.

(vii) Follow directions about keeping out of treated or restricted areas.

(b) There are federal rules to protect workers and handlers, including a requirement for safety training.

(3) Emergency medical care information.

(a) The name, address, and telephone number of the nearest emergency medical care facility shall be on the safety poster or displayed close to the safety poster.

(b) The agricultural employer shall inform workers promptly of any change to the information on emergency medical care facilities.

(4) Location.

(a) The information shall be displayed in a central location on the farm or in the nursery or greenhouse where it can be readily seen and read by workers.

(b) The information shall be displayed in a location in or near the forest in a place where it can be readily seen and read by workers and where workers are likely to congregate or pass by, such as at a decontamination site or an equipment storage site.

(5) Accessibility. Workers shall be informed of the location of the information and shall be allowed access to it.

(6) Legibility. The information shall remain legible during the time it is posted.

[97-09-013, recodified as § 296-307-12045, filed 4/7/97, effective 4/7/97. Statutory Authority: RCW 49.17.040, [49.17.]050 and [49.17.]060. 96-20-082, § 296-306A-12045, filed 9/30/96, effective 11/1/96.]

WAC 296-307-12050 Decontamination—Standards for workers—40 CFR, § 170.150. (1) Requirements. The agricultural employer must provide decontamination supplies for workers in accordance with this section whenever:

(a) Any worker on the agricultural establishment is performing an activity in the area where a pesticide was applied or a restricted-entry interval (REI) was in effect within the last thirty days; and

(b) The worker contacts anything that has been treated with the pesticide including but not limited to soil, water, plants, plant surfaces, and plant parts;

(c) *Exception.* The thirty-day time period established in (a) of this subsection shall not apply if the only pesticides used in the treated area are products with an REI of four hours or less on the label (but not a product without an REI on the label). When workers are in such treated areas, the agricultural employer shall provide decontamination supplies for not less than seven days following the expiration of any applicable REI.

(2) General conditions.

(a) The agricultural employer shall provide workers with adequate water for routine washing and emergency eyeflushing. At all times when the water is available to workers, the employer shall assure that it is of a quality and temperature that will not cause illness or injury when it contacts the skin or eyes or if it is swallowed.

(b) When water stored in a tank is to be used for mixing pesticides, it shall not be used for decontamination or eyeflushing, unless the tank is equipped with properly functioning valves or other mechanisms that prevent movement of pesticides into the tank.

(c) The agricultural employer shall provide soap and single-use towels in quantities sufficient to meet workers' needs.

(d) To provide for emergency eyeflushing, the agricultural employer shall assure that at least one pint of water is immediately available to each worker who is performing early entry activities permitted by WAC 296-307-12020 and for which the pesticide labeling requires protective eyewear. The eyeflush water shall be carried by the early entry worker, or shall be on the vehicle the early entry worker is using, or shall be otherwise immediately accessible.

(3) Location.

(a) The decontamination supplies shall be located together and shall be reasonably accessible to and not more than one-quarter mile from where workers are working.

(b) For worker activities performed more than one-quarter mile from the nearest place of vehicular access:

(i) The soap, single-use towels, and water may be at the nearest place of vehicular access.

(ii) The agricultural employer may permit workers to use clean water from springs, streams, lakes, or other sources for decontamination at the remote work site, if such water is more accessible than the water located at the nearest place of vehicular access.

(c) The decontamination supplies shall not be in an area being treated with pesticides.

(d) The decontamination supplies shall not be maintained in an area that is under a restricted-entry interval, unless the workers for whom the decontamination supplies are provided are performing early entry activities permitted by WAC 296-307-12020 and involving contact with treated surfaces and the decontamination supplies would otherwise not be reasonably accessible to those workers.

(4) Decontamination after early entry activities. At the end of any exposure period for workers engaged in early

entry activities permitted by WAC 296-307-12020 and involving contact with anything that has been treated with the pesticide to which the restricted-entry interval applies, including, but not limited to, soil, water, air, or surfaces of plants, the agricultural employer shall provide, at the site where the workers remove personal protective equipment, soap, clean towels, and a adequate amount of water so that the workers may wash thoroughly. At least ten gallons of water for one employee and twenty gallons of water for two or more employees shall be provided at early entry sites that do not have running water.

[Statutory Authority: RCW 49.17.040. 98-24-096, § 296-307-12050, filed 12/1/98, effective 3/1/99. 97-09-013, recodified as § 296-307-12050, filed 4/7/97, effective 4/7/97. Statutory Authority: RCW 49.17.040, [49.17.]050 and [49.17.]060. 96-20-082, § 296-306A-12050, filed 9/30/96, effective 11/1/96.]

WAC 296-307-12055 Emergency assistance—Standards for workers—40 CFR, § 170.160. If there is reason to believe that a person who is or has been employed on an agricultural establishment to perform tasks related to the production of agricultural plants has been poisoned or injured by exposure to pesticides used on the agricultural establishment, including, but not limited to, exposures from application, splash, spill, drift, or pesticide residues, the agricultural employer shall:

(1) Make available to that person prompt transportation from the agricultural establishment, including any labor camp on the agricultural establishment, to an appropriate emergency medical facility.

(2) Provide to that person or to treating medical personnel, promptly upon request, any obtainable information on:

(a) Product name, EPA registration number, and active ingredients of any product to which that person might have been exposed.

(b) Antidote, first-aid, and other medical information from the product labeling.

(c) The circumstances of application or use of the pesticide on the agricultural establishment.

(d) The circumstances of exposure of that person to the pesticide.

[97-09-013, recodified as § 296-307-12055, filed 4/7/97, effective 4/7/97. Statutory Authority: RCW 49.17.040, [49.17.]050 and [49.17.]060. 96-20-082, § 296-306A-12055, filed 9/30/96, effective 11/1/96.]

Standard for Pesticide Handlers

WAC 296-307-130 Applicability of this section—Standards for pesticide handlers—40 CFR, § 170.202. (1) Requirement. Except as provided by subsection (2) of this section, WAC 296-307-130 applies when any pesticide is handled for use on an agricultural establishment.

(2) Exceptions. WAC 296-307-130 does not apply when any pesticide is handled for use on an agricultural establishment in the following circumstances:

(a) For mosquito abatement, Mediterranean fruit fly eradication, or similar wide-area public pest control programs sponsored by governmental entities.

(b) On livestock or other animals, or in or about animal premises.

(c) On plants grown for other than commercial or research purposes, which may include plants in habitations, home fruit and vegetable gardens, and home greenhouses.

(d) On plants that are in ornamental gardens, parks, and public or private lawns and grounds and that are intended only for aesthetic purposes or climatic modification.

(e) In a manner not directly related to the production of agricultural plants, including, but not limited to, structural pest control, control of vegetation along rights of way and in other noncrop areas, and pasture and rangeland use.

(f) For control of vertebrate pests.

(g) As attractants or repellents in traps.

(h) On the harvested portions of agricultural plants or on harvested timber.

(i) For research uses of unregistered pesticides.

(j) Exemptions. Except as provided by WAC 296-307-130 and 296-307-13005, WAC 296-307-130 applies when a pesticide is handled for an agricultural establishment.

[Statutory Authority: RCW 49.17.040. 98-24-096, § 296-307-130, filed 12/1/98, effective 3/1/99. 97-09-013, recodified as § 296-307-130, filed 4/7/97, effective 4/7/97. Statutory Authority: RCW 49.17.040, [49.17.]050 and [49.17.]060. 96-20-082, § 296-306A-130, filed 9/30/96, effective 11/1/96.]

WAC 296-307-13005 Exemptions—Standards for handlers—40 CFR, § 170.204. The handlers listed in this section are exempt from the specified provisions of this part.

(1) Owners of agricultural establishments.

(a) The owner of an agricultural establishment is not required to provide to himself or members of his immediate family who are performing handling tasks on their own agricultural establishment the protections of:

(i) WAC 296-307-13010 (2) and (3).

(ii) WAC 296-307-13015.

(iii) WAC 296-307-13025.

(iv) WAC 296-307-13030.

(v) WAC 296-307-13035.

(vi) WAC 296-307-13040.

(vii) WAC 296-307-13045 (5) through (7).

(viii) WAC 296-307-13050.

(ix) WAC 296-307-13055.

(b) The owner of the agricultural establishment must provide the protections listed in subsection (1)(a)(i) through (ix) of this section to other handlers and other persons who are not members of his immediate family.

(2) Crop advisors.

(a) Provided that the conditions of (b) of this subsection are met, a person who is certified or licensed as a crop advisor by the Washington state department of agriculture under RCW 15.58.230, and persons performing crop advising tasks under such qualified crop advisor's direct supervision, are exempt from the provisions of:

(i) WAC 296-307-13030.

(ii) WAC 296-307-13045.

(iii) WAC 296-307-13050.

(iv) WAC 296-307-13055.

A person is under the direct supervision of a crop advisor when the crop advisor exerts the supervisory controls set out in (b)(iv) and (v) of this subsection. Direct supervision does not require that the crop advisor be physically present at all

times, but the crop advisor must be readily accessible to the employees at all times.

(b) Conditions of exemption.

(i) The certification or licensing program requires pesticide safety training that includes, at least, all the information in WAC 296-307-13025 (3)(d).

(ii) No entry into the treated area occurs until after application ends.

(iii) Applies only when performing crop advising tasks in the treated area.

(iv) The crop advisor must make specific determinations regarding the appropriate PPE, appropriate decontamination supplies, and how to conduct the tasks safely. The crop advisor must convey this information to each person under his direct supervision in a language that the person understands.

(v) Before entering a treated area, the certified or licensed crop advisor must inform, through an established practice of communication, each person under his direct supervision of the pesticide products and active ingredient(s) applied, method of application, time of application, the restricted-entry interval, which tasks to undertake, and how to contact the crop advisor.

(c) Applies only when the persons are performing crop advising tasks in the treated area.

(d) The crop advisor must make specific determinations regarding the appropriate PPE, appropriate decontamination supplies, and how to conduct the tasks safely. The crop advisor must convey this information to each person under his direct supervision in a language that the person understands.

[Statutory Authority: RCW 49.17.040. 98-24-096, § 296-307-13005, filed 12/1/98, effective 3/1/99. 97-09-013, recodified as § 296-307-13005, filed 4/7/97, effective 4/7/97. Statutory Authority: RCW 49.17.040, [49.17.]050 and [49.17.]060. 96-20-082, § 296-306A-13005, filed 9/30/96, effective 11/1/96.]

WAC 296-307-13010 Restrictions during applications—Standards for pesticide handlers—40 CFR, § 170.210. (1) Contact with workers and other persons. The handler employer and the handler shall assure that no pesticide is applied so as to contact, either directly or through drift, any worker or other person, other than an appropriately trained and equipped handler.

(2) Handlers handling highly toxic pesticides. The handler employer shall assure that any handler who is performing any handling activity with a product that has the skull and crossbones symbol on the front panel of the label is monitored visually or by voice communication at least every two hours.

(3) Fumigant applications in greenhouses. The handler employer shall assure:

(a) That any handler who handles a fumigant in a greenhouse, including a handler who enters the greenhouse before the acceptable inhalation exposure level or ventilation criteria have been met to monitor air levels or to initiate ventilation, maintains continuous visual or voice contact with another handler.

(b) That the other handler has immediate access to the personal protective equipment required by the fumigant labeling for handlers in the event entry into the fumigated greenhouse becomes necessary for rescue.

[97-09-013, recodified as § 296-307-13010, filed 4/7/97, effective 4/7/97. Statutory Authority: RCW 49.17.040, [49.17.]050 and [49.17.]060. 96-20-082, § 296-306A-13010, filed 9/30/96, effective 11/1/96.]

WAC 296-307-13015 Providing specific information about applications—Standards for pesticide handlers—40 CFR, § 170.222. When handlers (except those employed by a commercial pesticide handling establishment) are on an agricultural establishment and, within the last thirty days, a pesticide covered by this part has been applied on the establishment or a restricted-entry interval has been in effect, the handler employer shall display, in accordance with this section, specific information about the pesticide.

(1) Location, accessibility, and legibility. The information shall be displayed in the same location specified for the pesticide safety poster in WAC 296-307-13040(4) and shall be accessible and legible, as specified in WAC 296-307-13040 (5) and (6).

(2) Timing.

(a) If warning signs are posted for the treated area before an application, the specific application information for that application shall be posted at the same time or earlier.

(b) The information shall be posted before the application takes place, if handlers (except those employed by a commercial pesticide handling establishment) will be on the establishment during application. Otherwise, the information shall be posted at the beginning of any such handler's first work period.

(c) The information shall continue to be displayed for at least thirty days after the end of the restricted-entry interval (or, if there is no restricted-entry interval, for at least thirty days after the end of the application) or at least until the handlers are no longer on the establishment, whichever is earlier.

(3) Required information. The information shall include:

(a) The location and description of the treated area.

(b) The product name, EPA registration number, and active ingredient(s) of the pesticide.

(c) The time and date the pesticide is to be applied.

(d) The restricted-entry interval for the pesticide.

[Statutory Authority: RCW 49.17.040. 98-24-096, § 296-307-13015, filed 12/1/98, effective 3/1/99. 97-09-013, recodified as § 296-307-13015, filed 4/7/97, effective 4/7/97. Statutory Authority: RCW 49.17.040, [49.17.]050 and [49.17.]060. 96-20-082, § 296-306A-13015, filed 9/30/96, effective 11/1/96.]

WAC 296-307-13020 Notice of applications to agricultural employers—Standards for pesticide handlers—40 CFR, § 170.224. Before the application of any pesticide on or in an agricultural establishment, the handler employer shall provide the following information to any agricultural employer for the establishment or shall assure that any agricultural employer is aware of:

(1) Specific location and description of the treated area.

(2) Time and date of application.

(3) Product name, EPA registration number, and active ingredient(s).

(4) Restricted-entry interval.

(5) Whether posting and oral notification are required.

(6) Any other product-specific requirements on the product labeling concerning protection of workers or other persons during or after application.

[97-09-013, recodified as § 296-307-13020, filed 4/7/97, effective 4/7/97. Statutory Authority: RCW 49.17.040, [49.17.]050 and [49.17.]060. 96-20-082, § 296-306A-13020, filed 9/30/96, effective 11/1/96.]

WAC 296-307-13025 Pesticide safety training—Standards for pesticide handlers—40 CFR, § 170.230. (1) Requirement. Before any handler performs any handling task, the handler employer shall assure that the handler has been trained in accordance with this section during the last five years, counting from the end of the month in which the training was completed.

Note: In addition to the training required by this section, the agricultural employer shall assure, without exception, that all employees are trained in accordance with WAC 296-307-550, Employer chemical hazard communication.

(2) Exceptions. The following persons need not be trained under this section:

(a) A handler who is currently certified as an applicator of restricted-use pesticides under chapter 17.21 RCW.

(b) A handler who is certified or licensed as a crop advisor by the Washington state department of agriculture under RCW 15.58.230: Provided, That a requirement for such certification or licensing is pesticide safety training that includes all the information set out in WAC 296-307-13025 (3)(d).

(3) Training programs.

(a) General pesticide safety information shall be presented to handlers either orally from written materials or audiovisually. The information must be presented in a manner that the handlers can understand (such as through a translator). The presenter also shall respond to handlers' questions.

(b) The person who conducts the training shall meet at least one of the following criteria:

(i) Be currently certified as an applicator of restricted-use pesticides under chapter 17.21 RCW; or

(ii) Be currently designated as a trainer of certified applicators or pesticide handlers by the Washington state department of agriculture under chapters 15.58 or 17.21 RCW; or

(iii) Have completed a pesticide safety train-the-trainer program approved by a state, federal, or tribal agency having jurisdiction.

(c) Any person who issues a Washington state department of agriculture-approved worker protection standard handler training card must assure that the handler who receives the training card has been trained in accordance with (d) of this subsection.

(d) The pesticide safety training materials must convey, at a minimum, the following information:

(i) Format and meaning of information contained on pesticide labels and in labeling, including safety information such as precautionary statements about human health hazards.

(ii) Hazards of pesticides resulting from toxicity and exposure, including acute and chronic effects, delayed effects, and sensitization.

(iii) Routes by which pesticides can enter the body.

(iv) Signs and symptoms of common types of pesticide poisoning.

(v) Emergency first aid for pesticide injuries or poisonings.

(vi) How to obtain emergency medical care.

(vii) Routine and emergency decontamination procedures.

(viii) Need for and appropriate use of personal protective equipment.

(ix) Prevention, recognition, and first-aid treatment of heat-related illness.

(x) Safety requirements for handling, transporting, storing, and disposing of pesticides, including general procedures for spill cleanup.

(xi) Environmental concerns such as drift, runoff, and wildlife hazards.

(xii) Warnings about taking pesticides or pesticide containers home.

(xiii) Requirements of this part that must be followed by handler employers for the protection of handlers and other persons, including the prohibition against applying pesticides in a manner that will cause contact with workers or other persons, the requirement to use personal protective equipment, the provisions for training and decontamination, and the protection against retaliatory acts.

(4) Verification of training.

(a) Except as provided in (b) of this subsection, if the handler employer assures that a handler possesses a Washington state department of agriculture-approved worker protection standard handler training card, then the requirements of subsection (1) of this section will have been met.

(b) If the handler employer is aware or has reason to know that a Washington state department of agriculture-approved worker protection standard handler training card has not been issued in accordance with this section, or has not been issued to the handler bearing the card, or the handler training was completed more than five years before the beginning of the current month, a handler's possession of that card does not meet the requirements of subsection (1) of this section.

[Statutory Authority: RCW 49.17.010, [49.17].040, and [49.17].050. 01-17-033, § 296-307-13025, filed 8/8/01, effective 9/1/01. Statutory Authority: RCW 49.17.040. 98-24-096, § 296-307-13025, filed 12/1/98, effective 3/1/99. 97-09-013, recodified as § 296-307-13025, filed 4/7/97, effective 4/7/97. Statutory Authority: RCW 49.17.040, [49.17.]050 and [49.17.]060. 96-20-082, § 296-306A-13025, filed 9/30/96, effective 11/1/96.]

WAC 296-307-13030 Knowledge of labeling and site-specific information—Standards for pesticide handlers—40 CFR, § 170.232. (1) Knowledge of labeling information.

(a) The handler employer shall assure that before the handler performs any handling activity, the handler either has read the product labeling or has been informed in a manner the handler can understand of all labeling requirements related to safe use of the pesticide, such as signal words, human hazard precautions, personal protective equipment requirements, first-aid instructions, environmental precautions, and any additional precautions pertaining to the handling activity to be performed.

(b) The handler employer shall assure that the handler has access to the product labeling information during handling activities.

(2) Knowledge of site-specific information. Whenever a handler who is employed by a commercial pesticide handling establishment will be performing pesticide handling tasks on an agricultural establishment, the handler employer shall

assure that the handler is aware of the following information concerning any areas on the agricultural establishment that the handler may be in (or may walk within one-quarter mile of) and that may be treated with a pesticide or that may be under a restricted-entry interval while the handler will be on the agricultural establishment:

(a) Specific location and description of any such areas; and

(b) Restrictions on entering those areas.

[97-09-013, recodified as § 296-307-13030, filed 4/7/97, effective 4/7/97. Statutory Authority: RCW 49.17.040, [49.17.]050 and [49.17.]060. 96-20-082, § 296-306A-13030, filed 9/30/96, effective 11/1/96.]

WAC 296-307-13035 Safe operation of equipment—Standards for pesticide handlers—40 CFR, § 170.234. (1) The handler employer shall assure that before the handler uses any equipment for mixing, loading, transferring, or applying pesticides, the handler is instructed in the safe operation of such equipment, including, when relevant, chemigation safety requirements and drift avoidance.

(2) The handler employer shall assure that, before each day of use, equipment used for mixing, loading, transferring, or applying pesticides is inspected for leaks, clogging, and worn or damaged parts, and any damaged equipment is repaired or is replaced.

(3) Before allowing any person to repair, clean, or adjust equipment that has been used to mix, load, transfer, or apply pesticides, the handler employer shall assure that pesticide residues have been removed from the equipment, unless the person doing the cleaning, repairing, or adjusting is a handler employed by the agricultural or commercial pesticide handling establishment. If pesticide residue removal is not feasible, the handler employer shall assure that the person who repairs, cleans, or adjusts such equipment is informed:

(a) That such equipment may be contaminated with pesticides.

(b) Of the potentially harmful effects of exposure to pesticides.

(c) Of the correct way to handle such equipment.

[97-09-013, recodified as § 296-307-13035, filed 4/7/97, effective 4/7/97. Statutory Authority: RCW 49.17.040, [49.17.]050 and [49.17.]060. 96-20-082, § 296-306A-13035, filed 9/30/96, effective 11/1/96.]

WAC 296-307-13040 Posted pesticide safety information—Standards for pesticide handlers—40 CFR, § 170.235. (1) Requirement. When handlers (except those employed by a commercial pesticide handling establishment) are on an agricultural establishment and, within the last thirty days, a pesticide covered by this part has been applied on the establishment or a restricted-entry interval has been in effect, the handler employer shall display, in accordance with this section, pesticide safety information.

(2) Pesticide safety poster. A safety poster must be displayed that conveys, at a minimum, the following basic pesticide safety concepts:

(a) Help keep pesticides from entering your body. At a minimum, the following points shall be conveyed:

(i) Avoid getting on your skin or into your body any pesticides that may be on plants and soil, in irrigation water, or drifting from nearby applications.

(ii) Wash before eating, drinking, using chewing gum or tobacco, or using the toilet.

(iii) Wear work clothing that protects the body from pesticide residues (long-sleeved shirts, long pants, shoes and socks, and a hat or scarf).

(iv) Wash/shower with soap and water, shampoo hair, and put on clean clothes after work.

(v) Wash work clothes separately from other clothes before wearing them again.

(vi) Wash immediately in the nearest clean water if pesticides are spilled or sprayed on the body. As soon as possible, shower, shampoo, and change into clean clothes.

(vii) Follow directions about keeping out of treated or restricted areas.

(b) There are federal rules to protect workers and handlers including a requirement for safety training.

(3) Emergency medical care information.

(a) The name, address, and telephone number of the nearest emergency medical care facility shall be on the safety poster or displayed close to the safety poster.

(b) The handler employer shall inform handlers promptly of any change to the information on emergency medical care facilities.

(4) Location.

(a) The information shall be displayed in a central location on the farm or in the nursery or greenhouse where it can be readily seen and read by handlers.

(b) The information shall be displayed in a location in or near the forest in a place where it can be readily seen and read by handlers and where handlers are likely to congregate or pass by, such as at a decontamination site or an equipment storage site.

(5) Accessibility. Handlers shall be informed of the location of the information and shall be allowed access to it.

(6) Legibility. The information shall remain legible during the time it is posted.

[97-09-013, recodified as § 296-307-13040, filed 4/7/97, effective 4/7/97. Statutory Authority: RCW 49.17.040, [49.17.]050 and [49.17.]060. 96-20-082, § 296-306A-13040, filed 9/30/96, effective 11/1/96.]

WAC 296-307-13045 Personal protective equipment—Standards for pesticide handlers—40 CFR, § 170.240. (1) Requirement. Any person who performs tasks as a pesticide handler shall use the clothing and personal protective equipment specified on the labeling for use of the product.

(2) Definition.

(a) Personal protective equipment (PPE) means devices and apparel that are worn to protect the body from contact with pesticides or pesticide residues, including, but not limited to, coveralls, chemical-resistant suits, chemical-resistant gloves, chemical-resistant footwear, respiratory protection devices, chemical-resistant aprons, chemical-resistant headgear, and protective eyewear.

(b) Long-sleeved shirts, short-sleeved shirts, long pants, short pants, shoes, socks, and other items of work clothing are not considered personal protective equipment for the purposes of this section and are not subject to the requirements of this section, although pesticide labeling may require that such work clothing be worn during some activities.

(3) Provision. When personal protective equipment is specified by the labeling of any pesticide for any handling activity, the handler employer shall provide the appropriate personal protective equipment in clean and operating condition to the handler.

(a) When "chemical-resistant" personal protective equipment is specified by the product labeling, it shall be made of material that allows no measurable movement of the pesticide being used through the material during use.

(b) When "waterproof" personal protective equipment is specified by the product labeling, it shall be made of material that allows no measurable movement of water or aqueous solutions through the material during use.

(c) When a "chemical-resistant suit" is specified by the product labeling, it shall be a loose-fitting, one-piece or two-piece chemical-resistant garment that covers, at a minimum, the entire body except head, hands, and feet.

(d) When "coveralls" are specified by the product labeling, they shall be a loose-fitting, one-piece or two-piece garment, such as a cotton or cotton and polyester coverall, that covers, at a minimum, the entire body except head, hands, and feet. The pesticide product labeling may specify that the coveralls be worn over another layer of clothing.

(e) Gloves shall be of the type specified by the product labeling. Gloves or glove linings made of leather, cotton, or other absorbent material shall not be worn for handling activities unless such materials are listed on the product labeling as acceptable for such use.

(f) When "chemical-resistant footwear" is specified by the product labeling, one of the following types of footwear must be worn:

(i) Chemical-resistant shoes.

(ii) Chemical-resistant boots.

(iii) Chemical-resistant shoe coverings worn over shoes or boots.

(g) When "protective eyewear" is specified by the product labeling, one of the following types of eyewear must be worn:

(i) Goggles.

(ii) Face shield.

(iii) Safety glasses with front, brow, and temple protection.

(iv) Full-face respirator.

(h) When a "chemical-resistant apron" is specified by the product labeling, an apron that covers the front of the body from mid-chest to the knees shall be worn.

(i) When a respirator is specified by the product labeling, it shall be appropriate for the pesticide product used and for the activity to be performed. The handler employer shall assure that the respirator fits correctly by using the procedures consistent with chapter 296-307 WAC, Part Y-5. If the label does not specify the type of respirator to be used, it shall meet the requirements of chapter 296-307 WAC, Part Y-5. The respiratory protection requirements of chapter 296-307 WAC, Part Y-5, shall apply.

(j) When "chemical-resistant headgear" is specified by the product labeling, it shall be either a chemical-resistant hood or a chemical-resistant hat with a wide brim.

(4) Exceptions to personal protective equipment specified on product labeling.

(a) Body protection.

(i) A chemical-resistant suit may be substituted for "coveralls," and any requirement for an additional layer of clothing beneath is waived.

(ii) A chemical-resistant suit may be substituted for "coveralls" and a chemical-resistant apron.

(b) Boots. If chemical-resistant footwear with sufficient durability and a tread appropriate for wear in rough terrain is not obtainable, then leather boots may be worn in such terrain.

(c) Gloves. If chemical-resistant gloves with sufficient durability and suppleness are not obtainable, then during handling activities with roses or other plants with sharp thorns, leather gloves may be worn over chemical-resistant glove liners. However, once leather gloves are worn for this use, thereafter they shall be worn only with chemical-resistant liners and they shall not be worn for any other use.

(d) Closed systems. If handling tasks are performed using properly functioning systems that enclose the pesticide to prevent it from contacting handlers or other persons, and if such systems are used and are maintained in accordance with that manufacturer's written operating instructions, exceptions to labeling-specified personal protective equipment for the handling activity are permitted as provided in (d)(i) and (ii) of this subsection.

(i) Persons using a closed system to mix or load pesticides with a signal word of DANGER or WARNING may substitute a long-sleeved shirt, long pants, shoes, socks, chemical-resistant apron, and any protective gloves specified on the labeling for handlers for the labeling-specified personal protective equipment.

(ii) Persons using a closed system to mix or load pesticides other than those in (d)(i) of this subsection or to perform other handling tasks may substitute a long-sleeved shirt, long pants, shoes, and socks for the labeling-specified personal protective equipment.

(iii) Persons using a closed system that operates under pressure shall wear protective eyewear.

(iv) Persons using a closed system shall have all labeling-specified personal protective equipment immediately available for use in an emergency.

(e) Enclosed cabs. If handling tasks are performed from inside a cab that has a nonporous barrier which totally surrounds the occupants of the cab and prevents contact with pesticides outside of the cab, exceptions to personal protective equipment specified on the product labeling for that handling activity are permitted as provided in (e)(i) through (iv) of this subsection.

(i) Persons occupying an enclosed cab may substitute a long-sleeved shirt, long pants, shoes, and socks for the labeling-specified personal protective equipment. If a respiratory protection device is specified on the pesticide product labeling for the handling activity, it must be worn.

(ii) Persons occupying an enclosed cab that has a properly functioning ventilation system which is used and maintained in accordance with the manufacturer's written operating instructions and which is declared in writing by the manufacturer and by the Washington state department of labor and industries to provide respiratory protection equivalent to or greater than a dust/mist filtering respirator may substitute a long-sleeved shirt, long pants, shoes, and socks for the labeling-specified personal protective equipment. If a respi-

ratory protection device other than a dust/mist-filtering respirator is specified on the pesticide product labeling, it must be worn.

(iii) Persons occupying an enclosed cab that has a properly functioning ventilation system which is used and maintained in accordance with the manufacturer's written operating instructions and which is declared in writing by the manufacturer and by the Washington state department of labor and industries to provide respiratory protection equivalent to or greater than the vapor-removing or gas-removing respirator specified on pesticide product labeling may substitute a long-sleeved shirt, long pants, shoes, and socks for the labeling-specified personal protective equipment. If an air-supplying respirator or a self-contained breathing apparatus (SCBA) is specified on the pesticide product labeling, it must be worn.

(iv) Persons occupying an enclosed cab shall have all labeling-specified personal protective equipment immediately available and stored in a chemical-resistant container, such as a plastic bag. They shall wear such personal protective equipment if it is necessary to exit the cab and contact pesticide-treated surfaces in the treated area. Once personal protective equipment is worn in the treated area, it must be removed before reentering the cab.

(f) Aerial applications.

(i) Use of gloves. Chemical-resistant gloves shall be worn when entering or leaving an aircraft contaminated by pesticide residues. In the cockpit, the gloves shall be kept in an enclosed container to prevent contamination of the inside of the cockpit.

(ii) Open cockpit. Persons occupying an open cockpit shall use the personal protective equipment specified in the product labeling for use during application, except that chemical-resistant footwear need not be worn. A helmet may be substituted for chemical-resistant headgear. A visor may be substituted for protective eyewear.

(iii) Enclosed cockpit. Persons occupying an enclosed cockpit may substitute a long-sleeved shirt, long pants, shoes, and socks for labeling-specified personal protective equipment.

(g) Crop advisors. Crop advisors entering treated areas while a restricted-entry interval is in effect may wear the personal protective equipment specified on the pesticide labeling for early entry activities instead of the personal protective equipment specified on the pesticide labeling for handling activities, provided:

(i) Application has been completed for at least four hours.

(ii) Any inhalation exposure level listed in the labeling has been reached or any ventilation criteria established by WAC 296-307-12015 (3)(c) or in the labeling have been met.

(5) Use of personal protective equipment.

(a) The handler employer shall assure that personal protective equipment is used correctly for its intended purpose and is used according to the manufacturer's instructions.

(b) The handler employer shall assure that, before each day of use, all personal protective equipment is inspected for leaks, holes, tears, or worn places, and any damaged equipment is repaired or discarded.

(6) Cleaning and maintenance.

(a) The handler employer shall assure that all personal protective equipment is cleaned according to the manufacturer's instructions or pesticide product labeling instructions before each day of reuse. In the absence of any such instructions, it shall be washed thoroughly in detergent and hot water.

(b) If any personal protective equipment cannot be cleaned properly, the handler employer shall dispose of the personal protective equipment in accordance with any applicable federal, state, and local regulations. Coveralls or other absorbent materials that have been drenched or heavily contaminated with an undiluted pesticide that has the signal word DANGER or WARNING on the label shall be not be reused.

(c) The handler employer shall assure that contaminated personal protective equipment is kept separately and washed separately from any other clothing or laundry.

(d) The handler employer shall assure that all clean personal protective equipment shall be either dried thoroughly before being stored or shall be put in a well ventilated place to dry.

(e) The handler employer shall assure that all personal protective equipment is stored separately from personal clothing and apart from pesticide-contaminated areas.

(f) The handler employer shall assure that when dust/mist filtering respirators are used, the filters shall be replaced:

(i) When breathing resistance becomes excessive.

(ii) When the filter element has physical damage or tears.

(iii) According to manufacturer's recommendations or pesticide product labeling, whichever is more frequent.

(iv) In the absence of any other instructions or indications of service life, at the end of each day's work period.

(g) The handler employer shall assure that when gas-removing or vapor-removing respirators are used, the gas-removing or vapor-removing canisters or cartridges shall be replaced:

(i) At the first indication of odor, taste, or irritation.

(ii) According to manufacturer's recommendations or pesticide product labeling, whichever is more frequent.

(iii) In the absence of any other instructions or indications of service life, at the end of each day's work period.

(h) The handler employer shall inform any person who cleans or launders personal protective equipment:

(i) That such equipment may be contaminated with pesticides.

(ii) Of the potentially harmful effects of exposure to pesticides.

(iii) Of the correct way(s) to clean personal protective equipment and to protect themselves when handling such equipment.

(i) The handler employer shall assure that handlers have a clean place(s) away from pesticide storage and pesticide use areas where they may:

(i) Store personal clothing not in use.

(ii) Put on personal protective equipment at the start of any exposure period.

(iii) Remove personal protective equipment at the end of any exposure period.

(j) The handler employer shall not allow or direct any handler to wear home or to take home personal protective equipment contaminated with pesticides.

(7) Heat-related illness. When the use of personal protective equipment is specified by the labeling of any pesticide

for the handling activity, the handler employer shall assure that no handler is allowed or directed to perform the handling activity unless appropriate measures are taken, if necessary, to prevent heat-related illness.

[Statutory Authority: RCW 49.17.010, 49.17.040, 49.17.050, 49.17.060. 05-01-166, § 296-307-13045, filed 12/21/04, effective 4/2/05. Statutory Authority: RCW 49.17.040. 98-24-096, § 296-307-13045, filed 12/1/98, effective 3/1/99. 97-09-013, recodified as § 296-307-13045, filed 4/7/97, effective 4/7/97. Statutory Authority: RCW 49.17.040, [49.17.]050 and [49.17.]060. 96-20-082, § 296-306A-13045, filed 9/30/96, effective 11/1/96.]

WAC 296-307-13050 Decontamination—Standards for pesticide handlers—40 CFR, § 170.250. (1) Requirement. During any handling activity, the handler employer shall provide for handlers, in accordance with this section, decontamination supplies for washing off pesticides and pesticide residues.

(2) General conditions.

(a) The handler employer shall provide handlers with enough water for routine washing, for emergency eyeflushing, and for washing the entire body in case of an emergency. At all times when the water is available to handlers, the handler employer shall assure that it is of a quality and temperature that will not cause illness or injury when it contacts the skin or eyes or if it is swallowed. At least ten gallons of water for one employee and twenty gallons of water for two or more employees shall be provided at mixing and loading sites that do not have running water.

(b) When water stored in a tank is to be used for mixing pesticides, it shall not be used for decontamination or eyeflushing, unless the tank is equipped with properly functioning valves or other mechanisms that prevent movement of pesticides into the tank.

(c) The handler employer shall provide soap and single-use towels in quantities sufficient to meet handlers' needs.

(d) The handler employer shall provide one clean change of clothing, such as coveralls for use in an emergency.

(3) Location. The decontamination supplies shall be located together and reasonably accessible to and not more than one-quarter mile from each handler during the handling activity.

(a) Exception for mixing sites. For mixing activities, the decontamination supplies shall be at the mixing site.

(b) Exception for pilots. The decontamination supplies for a pilot who is applying pesticides aerially shall be in the airplane or at the aircraft loading site.

(c) Exception for handling pesticides in remote areas. When handling activities are performed more than one-quarter mile from the nearest place of vehicular access:

(i) The soap, single-use towels, clean change of clothing, and water may be at the nearest place of vehicular access.

(ii) The handler employer may permit handlers to use clean water from springs, streams, lakes, or other sources for decontamination at the remote work site, if such water is more accessible than the water with the decontamination supplies located at the nearest place of vehicular access.

(d) Decontamination supplies in treated areas. The decontamination supplies shall not be in an area being treated with pesticides or in an area under a restricted-entry interval, unless:

(i) The decontamination supplies are in the area where the handler is performing handling activities;

(ii) The soap, single-use towels, and clean change of clothing are in enclosed containers; and

(iii) The water is running tap water or is enclosed in a container.

(4) Emergency eyeflushing. To provide for emergency eyeflushing, the handler employer shall assure that at least one pint of water is immediately available to each handler who is performing tasks for which the pesticide labeling requires protective eyewear. The eyeflush water shall be carried by the handler, or shall be on the vehicle or aircraft the handler is using, or shall be otherwise immediately accessible.

(5) A plumbed or portable emergency eyewash capable of delivering at least 1.5 liters (0.4 gals.) of water per minute for fifteen minutes shall be provided at all pesticide mixing and loading stations or handler decontamination sites when the label requires protective eyewear for mixing, loading or applying. A plumbed or portable system meeting the above requirements shall be provided at all permanent pesticide mixing and loading sites.

(6) Decontamination after handling activities. At the end of any exposure period, the handler employer shall provide at the site where handlers remove personal protective equipment, soap, clean towels, and a sufficient amount of water so that the handlers may wash thoroughly. At least ten gallons of water for one employee and twenty gallons of water for two or more employees shall be provided at mixing and loading sites that do not have running water.

[97-09-013, recodified as § 296-307-13050, filed 4/7/97, effective 4/7/97. Statutory Authority: RCW 49.17.040, [49.17.]050 and [49.17.]060. 96-20-082, § 296-306A-13050, filed 9/30/96, effective 11/1/96.]

WAC 296-307-13055 Emergency assistance—Standards for pesticide handlers—40 CFR, § 170.260. If there is reason to believe that a person who is or has been employed by an agricultural establishment or commercial pesticide handling establishment to perform pesticide handling tasks has been poisoned or injured by exposure to pesticides as a result of that employment, including, but not limited to, exposures from handling tasks or from application, splash, spill, drift, or pesticide residues, the handler employer shall:

(1) Make available to that person prompt transportation from the place of employment or the handling site to an appropriate emergency medical facility.

(2) Provide to that person or to treating medical personnel, promptly upon request, any obtainable information on:

(a) Product name, EPA registration number, and active ingredients of any product to which that person might have been exposed.

(b) Antidote, first-aid, and other medical information from the product labeling.

(c) The circumstances of handling of the pesticide.

(d) The circumstances of exposure of that person to the pesticide.

[97-09-013, recodified as § 296-307-13055, filed 4/7/97, effective 4/7/97. Statutory Authority: RCW 49.17.040, [49.17.]050 and [49.17.]060. 96-20-082, § 296-306A-13055, filed 9/30/96, effective 11/1/96.]

Part J
Pesticides Recordkeeping

WAC 296-307-145 Pesticides recordkeeping.

[97-09-013, recodified as § 296-307-145, filed 4/7/97, effective 4/7/97. Statutory Authority: RCW 49.17.040, [49.17.]050 and [49.17.]060. 96-22-048, § 296-306A-145, filed 10/31/96, effective 12/1/96.]

WAC 296-307-14505 What records must an employer keep for pesticide applications? (1) If you apply pesticides, or have pesticides applied for you, related to the production of an agricultural crop, you must keep records for each application. The records must include the following:

(a) The address or exact location where the pesticide was applied or stored;

Note: If you apply pesticides to one acre or more, the location must be shown on the map on the required form for at least the first application.

(b) The year, month, day, and time the pesticide was applied or stored;

(c) The product name on the registered label and the United States Environmental Protection Agency registration number, if applicable, of the pesticide that was applied or stored;

(d) The crop or site to which the pesticide was applied (application crop or site);

(e) The amount of pesticide applied per acre, or other appropriate measure;

(f) The concentration of pesticide applied;

(g) The total area to which pesticide was applied;

(h) If applicable, the licensed applicator's name, address, and telephone number and the name of the individual(s) making the application;

(i) The direction and estimated velocity of the wind at the time the pesticide was applied;

Exception: Wind information does not have to be recorded for applications of baits in bait stations and pesticide applications within structures.

(j) Any other reasonable information required by the department.

(2) A commercial pesticide applicator must provide a copy of the pesticide application records to the owner or lessee of the lands to which the pesticide is applied. Pesticide application records may be provided on any form that includes all required information.

(3) You must update records on the same day that a pesticide is applied. You may use a copy as the record of the pesticide application. You must maintain the records for at least seven years after the date of the application.

(4) You must ensure that pesticide application records are readily accessible to employees and their designated representatives in a central location in the workplace. The records must be available beginning on the day the application is made and for at least thirty days after. You may view the pesticide application records and make your own record from that information.

(5) New or newly assigned employees must be made aware of the accessibility of the application records before working with pesticides or in an area containing pesticides.

(6) When storing pesticides, you must, at least once a year, perform an inventory of the pesticides stored in any work area.

(7) The pesticide inventory records must include the following information:

(a) The location where the pesticide is stored;

(b) The year, month, day, and time the pesticide was first stored;

(c) The product name used on the registered label and the United States Environmental Protection Agency registration number, if applicable, of the pesticide that is stored; and

(d) The amount of pesticide in storage at the time of the inventory.

(8) You must maintain a record of pesticide purchases made between the annual inventory dates.

(a) Instead of this purchase record, you may obtain from distributors from whom you buy pesticides, a statement obligating the distributor to maintain the purchase records on your behalf to meet the requirements of this section.

(b) We may require you to submit all purchase records covering the purchases during a specified period of time or in a specified geographical area.

(9) When you end all pesticide activities, you must file the records with us. Anyone who succeeds or replaces you must retain the records required by this section, but that person is not liable for any violations you commit.

(10) You must ensure that the records required under this section are readily accessible to us for inspection. You must also provide copies of the records on request, to:

(a) An employee or the employee's designated representative in the case of an industrial insurance claim filed under Title 51 RCW with the department of labor and industries;

(b) Treating health care personnel; or

(c) The pesticide incident reporting and tracking review panel.

(11) The designated representative or treating health care personnel are not required to identify the employee represented or treated.

(12) We will keep the name of any affected employee confidential according to RCW 49.17.080(1).

(13) When treating health care personnel request records under this section, and the record is required to determine treatment, you must provide copies of the record immediately. Information for treating health care personnel must be made immediately available by telephone, if requested, with a copy of the records provided within twenty-four hours. For all other requests, you must provide copies of the records within seventy-two hours.

(14) If requested, you must provide copies of records on a form provided by the department.

(15) If you suspect that an employee is ill or injured because of an exposure to one or more pesticides, you must immediately provide the employee with a copy of the relevant pesticide application records.

(16) If you refuse to provide a copy of a requested record, the requester may notify the department of the request and your refusal.

(a) Within seven working days, we will request that you provide us with all pertinent copies of the records, except that in a medical emergency we will request within two working days.

(b) You must provide copies of the records to us within twenty-four hours after we request.

(17) We inspect for the records required under this section as part of any on-site inspection of a workplace conducted under this chapter or chapter 49.17 RCW. We will determine, during the inspection, whether the records are readily transferable to a form adopted by the department, and readily accessible to employees. However, your records will not be inspected more than once in any calendar year, unless a previous inspection has found recordkeeping violations. If recordkeeping violations are found, we may conduct reasonable multiple inspections, according to department rules. Nothing in this section limits our inspection of records pertaining to pesticide-related injuries, illnesses, fatalities, accidents, or complaints.

(18) If you fail to maintain the records, or provide access to or copies of the records required under this section, you will be subject to penalties authorized under RCW 49.17.180.

(19) The department of labor and industries and the department of agriculture will jointly adopt by rule, forms that satisfy the information requirements of this section and RCW 17.21.100. Pesticide application record forms can be found in chapter 16-228 WAC, General pesticide rules.

[Statutory Authority: RCW 49.17.010, 49.17.040, 49.17.050, and 49.17.060. 04-13-129, § 296-307-14505, filed 6/22/04, effective 8/1/04. Statutory Authority: RCW 49.17.010, [49.17].040, and [49.17].050. 01-17-033, § 296-307-14505, filed 8/8/01, effective 9/1/01. 97-09-013, recodified as § 296-307-14505, filed 4/7/97, effective 4/7/97. Statutory Authority: RCW 49.17.040, [49.17.]050 and [49.17.]060. 96-22-048, § 296-306A-14505, filed 10/31/96, effective 12/1/96.]

WAC 296-307-14510 Sample pesticide storage record.

State Department of Labor & hdustries
Division of Industrial Safety & Health
PO Box 207
Olympia, WA 98507-0207

PESTICIDE STORAGE RECORD

1. Name of person storing pesticide

2. Name of pesticide owner — Telephone

3. Owner's address — City — State — Zip

4. Pesticide Information

Date	Product Information	Active Ingredients (common name)	EPA Reg. No.	Amount Stored

6. Location Storage:

b) Street address

b) If a street location is not appropriate, pinpoint the location of the storage and describe the location:

Township — N

Range — E or W

Section(s)

County

[Statutory Authority: RCW 49.17.010, 49.17.040, 49.17.050, and 49.17.060. 04-13-129, § 296-307-14510, filed 6/22/04, effective 8/1/04. 97-09-013, recodified as § 296-307-14510, filed 4/7/97, effective 4/7/97. Statutory Authority: RCW 49.17.040, [49.17.]050 and [49.17.]060. 96-22-048, § 296-306A-14510, filed 10/31/96, effective 12/1/96.]

Part J-1
Cholinesterase Monitoring

WAC 296-307-148 Scope and summary.

Your responsibility:

To implement a monitoring program for your employees who, as part of their job duties, **handle** category I or II organophosphate or N-methyl-carbamate pesticides with the words "DANGER" or "WARNING" on the label.

Definition:

The terms **handle** and **handler** refer to employees who are engaged in the job duties listed in the definition of "handler" contained in WAC 296-307-11005, Pesticides (worker protection standard).

IMPORTANT:

Whenever there is reason to believe that an employee has been poisoned or injured by exposure to pesticides while on the job, you need to provide the medical services required by WAC 296-307-13055.

You must:

Maintain handling records for covered pesticides
WAC 296-307-14805.
Implement a medical monitoring program
WAC 296-307-14810.
Identify a physician or licensed health care professional
WAC 296-307-14815.
Make cholinesterase testing available
WAC 296-307-14820.
Respond to depressed cholinesterase levels
WAC 296-307-14825.
Provide medical removal protection benefits
WAC 296-307-14830.
Maintain records
WAC 296-307-14835.
Provide training
WAC 296-307-14840.
Implementation plan
WAC 296-307-14845.

[Statutory Authority: RCW 49.17.010, 49.17.040, 49.17.050, and 49.17.060. 03-24-105, § 296-307-148, filed 12/3/03, effective 2/1/04.]

WAC 296-307-14805 Maintain handling records for covered pesticides.

You must:

• Maintain accurate records of all time that each employee spends handling category I or II organophosphate or N-methyl-carbamate pesticides (this includes employees who do not meet the handling hour thresholds in Table 1).

• Retain pesticide handling records for seven years.

• Make sure that pesticide-handling records are readily accessible to employees, their designated representatives, and treating health care professionals.

[Statutory Authority: RCW 49.17.010, 49.17.040, 49.17.050, and 49.17.060. 03-24-105, § 296-307-14805, filed 12/3/03, effective 2/1/04.]

WAC 296-307-14810 Implement a medical monitoring program.

You must:

• Implement a medical monitoring program for your employees who handle or will be expected to handle category I or II organophosphate or N-methyl-carbamate pesticides according to the schedule in Table 1.

Table 1
Implementation Schedule

Provide medical monitoring for each employee who handles organophosphate or N-methyl-carbamate pesticides for:	Beginning
Fifty or more hours in any consecutive thirty-day period	February 1, 2004
Thirty or more hours in any consecutive thirty-day period	February 1, 2005

Note: • The department will adjust the threshold for medical monitoring of employees under this rule on February 1, 2005, if the data collected during 2004 clearly demonstrates that the threshold should be either lower or higher than thirty hours.
• There is nothing in this rule that prohibits employers from providing cholinesterase monitoring to employees who handle organophosphate or N-methyl-carbamate pesticides for fewer hours than specified in Table 1.

[Statutory Authority: RCW 49.17.010, 49.17.040, 49.17.050, and 49.17.060. 03-24-105, § 296-307-14810, filed 12/3/03, effective 2/1/04.]

WAC 296-307-14815 Identify a physician or licensed health care professional.

You must:

• Identify a physician or other licensed health care professional (LHCP) who will:

– Provide baseline and periodic cholinesterase testing through the department of health public health laboratory, or beginning in 2006, through any laboratory approved by the department of labor and industries.

– Interpret tests.

– Provide you with written recommendations and opinions that:

■ Identify employees with periodic test results requiring a work practice evaluation.

■ Identify employees with periodic test results indicating they must be removed from handling and other exposure to organophosphate and N-methyl-carbamate pesticides.

■ Provide guidance on medical monitoring.

■ Include any other relevant information concerning an employee's workplace exposure to organophosphate and N-methyl-carbamate pesticides.

• Instruct the physician or other licensed health care professional (LHCP) to **NOT** reveal in writing or in any other communication with you, personally identifiable medical information, other than laboratory test results, for any employee.

• Make sure the physician or LHCP is familiar with the requirements of this rule (for example, by providing a copy of the rule or by confirming that the provider has attended training on the rule).

• Post the name, address, and telephone number of the medical provider you have identified at the locations where employees usually start their work day.

• Make sure copies of employee test results and written recommendations from the physician or LHCP are maintained for seven years.

[Statutory Authority: RCW 49.17.010, 49.17.040, 49.17.050, and 49.17.060. 03-24-105, § 296-307-14815, filed 12/3/03, effective 2/1/04.]

WAC 296-307-14820 Make cholinesterase testing available.

You must:

• Make medical monitoring available to employees who will meet the exposure thresholds in Table 1, at no cost and at a reasonable time and place, as follows:

– Provide annual baseline red blood cell (RBC) and plasma cholinesterase tests that are taken at least thirty days after the employee last handled organophosphate or N-methyl-carbamate pesticides.

– Provide periodic RBC and plasma cholinesterase testing:

■ Within three days after the end of each thirty-day period where the employee meets the handling levels in Table 1; however, testing is not required more often than every thirty days;

OR

■ At least every thirty days for those employees who may meet the handling levels in Table 1.

• Arrange to obtain a "working baseline" as soon as possible for employees who initially decline cholinesterase testing and later choose to participate in testing.

– Follow the recommendations of the physician or LHCP regarding continued employee pesticide handling or removal from handling until a thirty-day exposure free baseline can be established.

Exemption: You do not need to provide baseline or periodic testing for those employees whose work exposure is limited to handling only N-methyl-carbamate pesticides.

Note: • You do not need to count time spent mixing and loading using closed systems (as defined in WAC 296-307-13045 (4)(d)) in determining the need for periodic testing. Time using closed systems is still counted for purposes of establishing coverage under this rule and determining the need for obtaining baseline cholinesterase levels.
• For new employees, the medical provider may accept previous baselines, if they are obtained according to this rule.
• The first thirty consecutive day period begins on the first day of handling organophosphate or N-methyl-carbamate pesticides after obtaining the baseline cholinesterase test.

You must:

• Obtain a signed declination statement from the physician or LHCP for employees who decline cholinesterase testing.

– Employees may decline cholinesterase testing only after they receive training about cholinesterase inhibiting pesticides and discuss the risks and benefits of participation with the physician or LHCP.

– An employee may change his or her mind and elect to participate or decline to continue participation in the program at any time.

• Make sure the employee receives a copy of the signed declination statement.

Note: If employers discourage participation in cholinesterase monitoring, or in any way interfere with an employee's decision to continue with this program, this interference may represent unlawful discrimination under RCW 49.17.160, Discrimination against employee filing, instituting proceedings, or testifying prohibited—Procedure—Remedy.

[Statutory Authority: RCW 49.17.010, 49.17.040, 49.17.050, and 49.17.060. 03-24-105, § 296-307-14820, filed 12/3/03, effective 2/1/04.]

WAC 296-307-14825 Respond to depressed cholinesterase levels.

You must:

• Respond to an employee's depressed cholinesterase levels by:

– Taking the actions required in Table 2;

AND

– Following any additional occupational health recommendations from the physician or LHCP.

Table 2
Required Responses to an Employee's Depressed Cholinesterase Levels

When:	Action to be taken:	Methods:
An employee's RBC or plasma cholinesterase levels fall more than twenty percent below the baseline	Evaluate the employee's work practices to identify and correct potential sources of pesticide exposure	Review: • Personal protective equipment (PPE) and its condition • Employees' PPE usage • General sanitation practices and availability of decontamination facilities required by WAC 296-307-13050 • Pesticide handling practices
An employee's RBC cholinesterase level falls thirty percent or more from the baseline **OR** An employee's plasma cholinesterase level falls forty percent or more from the baseline	Remove the employee from handling and other work exposures to organophosphate and N-methyl-carbamate pesticides such as thinning and harvesting in recently treated areas **AND** Evaluate the employee's work practices to identify and correct potential sources of pesticide exposure	• When available, provide the employee with other duties that do not include handling and other work exposures to organophosphate and N-methyl-carbamate pesticides • Provide medical monitoring and cholinesterase testing as recommended by the physician or LHCP
A removed employee's cholinesterase levels return to twenty percent or less below baseline	The employee may return to handling class I and II organophosphate and N-methyl-carbamate pesticides	Continue periodic cholinesterase monitoring

[Statutory Authority: RCW 49.17.010, 49.17.040, 49.17.050, and 49.17.060. 03-24-105, § 296-307-14825, filed 12/3/03, effective 2/1/04.]

WAC 296-307-14830 Provide medical removal protection benefits.

You must:

• Provide medical removal protection benefits for a maximum of three months on each occasion:

– An employee is temporarily removed from work due to depressed cholinesterase levels;

OR

– Assigned to other duties due to depressed cholinesterase levels.

• Provide medical removal protection benefits that include maintenance of the same pay, seniority and other employment rights and benefits of an employee as though the employee had not been removed from normal exposure to organophosphate or N-methyl-carbamate pesticides or otherwise limited.

[Statutory Authority: RCW 49.17.010, 49.17.040, 49.17.050, and 49.17.060. 03-24-105, § 296-307-14830, filed 12/3/03, effective 2/1/04.]

WAC 296-307-14835 Maintain records.

You must:

• Make sure that the following records are maintained:

– The name, address, and telephone number of the physician or LHCP.

– Written recommendations and opinions received from the physician or LHCP.

– Findings of all work practice investigations.

– Dates when employees were medically removed from their duties and dates when employees are returned to duties that include handling organophosphate or N-methyl-carbamate pesticides.

– Signed declination statements.

• Maintain records for seven years.

• Make sure that all records are readily accessible to the employee and his or her designated representative.

[Statutory Authority: RCW 49.17.010, 49.17.040, 49.17.050, and 49.17.060. 03-24-105, § 296-307-14835, filed 12/3/03, effective 2/1/04.]

WAC 296-307-14840 Provide training.

You must:

• Make sure employees have received training before initial medical monitoring. The training must include at least the following:

– The human health hazards and physical symptoms of overexposure to organophosphate and N-methyl-carbamate cholinesterase-inhibiting pesticides.

– The purpose and requirements for medical monitoring.

Note: Training required by this rule may be combined with other pesticide handler training as required by WAC 296-307-13025, Pesticide safety training—Standards for pesticide handlers.

[Statutory Authority: RCW 49.17.010, 49.17.040, 49.17.050, and 49.17.060. 03-24-105, § 296-307-14840, filed 12/3/03, effective 2/1/04.]

WAC 296-307-14845 Implementation plan. The department will implement and complete an evaluation of this rule by doing the following:

• Organize a scientific team to oversee collection and analysis of data collected during 2004 and 2005. L&I will select representatives of the University of Washington, Washington State University, as well as other interested members of the academic and scientific communities, to participate on the team. The team will provide an initial analysis of testing data and any appropriate recommendations directly to L&I and to the cholinesterase monitoring advisory committee by November 1, 2004, and a further analysis and any appropriate recommendations by November 1, 2005. A final report and recommendations will be completed by September 30, 2006.

• Establish a cholinesterase stakeholder advisory committee to evaluate issues related to rule implementation and provide recommendations to the department regarding implementation of the rule and any possible modifications to it. L&I will invite representatives of growers, labor and other affected state agencies to participate on the advisory committee. The committee will have an opportunity to comment on the analysis completed by the scientific team and to make any appropriate recommendations before December 1, 2004, and again before December 1, 2005. In addition, the committee will review the scientific committee's final report and recommendations and provide advice to L&I prior to December 1, 2006.

• Review reports from the scientific team and stakeholder advisory committee, and other relevant information and make modifications to the rule as appropriate.

• Make efforts to defray the costs of medical testing during 2004.

• Prepare and distribute provider guidelines.

• Develop and make available a model employee training program.

• Publish a list of trained providers and certified laboratories on the internet.

• Coordinate recordkeeping requirements with the department of agriculture.

[Statutory Authority: RCW 49.17.010, 49.17.040, 49.17.050, and 49.17.060. 03-24-105, § 296-307-14845, filed 12/3/03, effective 2/1/04.]

Part K
Working Near Overhead Lines

WAC 296-307-150 Employees working near overhead lines.

[97-09-013, recodified as § 296-307-150, filed 4/7/97, effective 4/7/97. Statutory Authority: RCW 49.17.040, [49.17.]050 and [49.17.]060. 96-22-048, § 296-306A-150, filed 10/31/96, effective 12/1/96.]

WAC 296-307-15003 What does this section cover? WAC 296-307-150 does not apply to the construction, reconstruction, operation, or maintenance of overhead electrical conductors (and their supporting structures and associated equipment) by authorized and qualified electrical employees. It also does not apply to authorized and qualified employees engaged in the construction, reconstruction, operations and maintenance of overhead electrical circuits or conductors (and their supporting structures and associated equipment) of rail transportation systems, or electrical generating, transmission, distribution, and communication systems.

[Statutory Authority: RCW 49.17.040. 98-24-096, § 296-307-15003, filed 12/1/98, effective 3/1/99. 97-09-013, recodified as § 296-307-15003, filed 4/7/97, effective 4/7/97. Statutory Authority: RCW 49.17.040, [49.17.]050 and [49.17.]060. 96-22-048, § 296-306A-15003, filed 10/31/96, effective 12/1/96.]

WAC 296-307-15006 What clearance and safeguards are required to protect employees working near overhead lines? (1) All exposed overhead conductors must be isolated from accidental contact by employees or equipment.

(2) Irrigation pipe must not be stored within one hundred feet of overhead conductors.

(3) Upending irrigation pipe within one hundred feet of overhead conductors is prohibited.

(4) Water and irrigation systems, and other devices that discharge a conductive liquid, must be set up and operated so that the discharge from the system is directed more than ten feet away from overhead high-voltage lines, and avoids contact with any exposed electrical power conductor.

(5) Employees are prohibited from entering or working in proximity to high-voltage lines, unless there are guards to prevent accidental contact.

Note: Voltage 600V and higher is considered high voltage.

(6) The following are prohibited if it is possible to bring these objects within ten feet of high-voltage lines:

(a) Operating, erecting, or transporting tools, equipment, or a moving part;

(b) Handling, transporting, or storing materials; or

(c) Moving a building near high-voltage lines.

(7) Equipment or machines must be operated near power lines according to the following:

(a) For lines rated 50 kv. or below, minimum clearance between the lines and any part of the object must be ten feet;

(b) For lines rated over 50 kv. minimum clearance between the lines and any part of the object must be ten feet plus four tenths of an inch for each 1 kv., over 50 kv., or twice the length of the line insulator but never less than ten feet;

(c) In transit, the clearance must be a minimum of four feet for voltages less than 50 kv., ten feet for voltages over 50 kv. up to and including 345 kv., and sixteen feet for voltages up to and including 750 kv.;

(d) You must designate someone to observe clearance and give warning for operations where it is difficult for the operator to see well enough to maintain the necessary clearance.

Exception: You are exempt from this requirement if electrical distribution and transmission lines have been deenergized and visibly grounded at point of work; or if insulating barriers, not a part of or an attachment to the equipment or machinery, have been erected to prevent physical contact with the lines.

[97-09-013, recodified as § 296-307-15006, filed 4/7/97, effective 4/7/97. Statutory Authority: RCW 49.17.040, [49.17.]050 and [49.17.]060. 96-22-048, § 296-306A-15006, filed 10/31/96, effective 12/1/96.]

WAC 296-307-15009 What signs must an employer post to warn employees working near overhead lines? You must post and maintain in plain view of the operator on each derrick, power-shovel, drilling-rig, hay loader, hay stacker, or similar apparatus with parts that are capable of vertical, lateral or swinging motion, a durable warning sign legible at twelve feet that says, "unlawful to operate this equipment within ten feet of high-voltage lines."

[97-09-013, recodified as § 296-307-15009, filed 4/7/97, effective 4/7/97. Statutory Authority: RCW 49.17.040, [49.17.]050 and [49.17.]060. 96-22-048, § 296-306A-15009, filed 10/31/96, effective 12/1/96.]

WAC 296-307-15012 When must an employer notify the utility of employees working near overhead lines? The employer must notify the operator of high-voltage lines when any operations are to be performed, tools or materials handled, or equipment is to be moved or operated within ten feet of any high-voltage line. All required safety measures must be completed before proceeding with any work that would reduce the clearance requirements of this section.

[97-09-013, recodified as § 296-307-15012, filed 4/7/97, effective 4/7/97. Statutory Authority: RCW 49.17.040, [49.17.]050 and [49.17.]060. 96-22-048, § 296-306A-15012, filed 10/31/96, effective 12/1/96.]

Part L
Temporary Worker Housing

WAC 296-307-161 Temporary worker housing.

[Statutory Authority: RCW 49.17.010, [49.17].040, and [49.17].050 and 1999 c 374. 00-06-081, § 296-307-161, filed 3/1/00, effective 3/1/00.]

WAC 296-307-16101 Purpose and applicability. (1) Purpose. This part is adopted by the Washington state department of labor and industries to implement the provisions of chapter 49.17 RCW and establish minimum health and safety requirements for temporary worker housing.

(2) Applicability.

(a) This part applies only to operators of temporary worker housing. Operators using tents within the cherry harvest season must refer to WAC 296-307-163, Part L-1, or chapter 246-361 WAC.

(b) Operators with ten or more occupants are required to be licensed under this part. Operators with nine or less employees are not required to be licensed, but must comply with these standards.

(c) For department of health licensing, on-site survey, water test fees, etc., see WAC 246-358-990.

[Statutory Authority: RCW 49.17.010, [49.17].040, and [49.17].050 and 1999 c 374. 00-06-081, § 296-307-16101, filed 3/1/00, effective 3/1/00.]

WAC 296-307-16103 Definitions. For the purposes of this part, the following words and phrases will have the following meanings unless the context clearly indicates otherwise:

"Agricultural employee" means any person who renders personal services to, or under the direction of, an agricultural employer in connection with the employer's agricultural activity.

"Agricultural employer" means any person engaged in agricultural activity, including the growing, producing, or harvesting of farm or nursery products, or engaged in the forestation or reforestation of lands, which includes but is not limited to the planting, transplanting, tubing, precommercial thinning, and thinning of trees and seedlings, the clearing, piling, and disposal of brush and slash, the harvest of Christmas trees, and other related activities.

"Building" means any structure used or intended to be used for supporting or sheltering any use or occupancy that may include cooking, eating, sleeping, and sanitation facilities.

"Common food-handling facility" means an area designated by the operator for occupants to store, prepare, cook, and eat their own food supplies.

"Current certificate (first aid)" means a first-aid training certificate that has not expired.

"Department" means the Washington state department of health and/or the department of labor and industries.

"Dining hall" means a cafeteria-type eating place with food furnished by and prepared under the direction of the operator for consumption, with or without charge, by occupants.

"Drinking fountain" means a fixture equal to a nationally recognized standard or a designed-to-drain faucet, which provides potable drinking water under pressure. "Drinking fountain" does not mean a bubble-type water dispenser.

"Dwelling unit" means a shelter, building, or portion of a building, that may include cooking and eating facilities, which is:

• Provided and designated by the operator as either a sleeping area, living area, or both, for occupants; and

• Physically separated from other sleeping and common-use areas.

"First-aid qualified" means that the person holds a current certificate of first-aid training from the American Red Cross or another course with equivalent content or hours.

"Food-handling facility" means a designated, enclosed area for preparation of food.

"Group A water system" means a public water system and includes community and noncommunity water systems.

(a) A community water system means any Group A water system providing service to fifteen or more service connections used by year-round residents for one hundred eighty or more days within a calendar year, regardless of the number of people, or regularly serving at least twenty-five year-round (i.e., more than one hundred eighty days per year) residents.

(b) A noncommunity water system means a Group A water system that is not a community water system. Noncommunity water systems are further defined as:

(i) Nontransient (NTNC) water system that provides service opportunity to twenty-five or more of the same nonresidential people for one hundred eighty or more days within a calendar year.

(ii) Transient (TNC) water system that serves:

• Twenty-five or more of the same people each day for sixty or more days within a calendar year;

• Twenty-five or more of the same people each day for sixty or more days, but less than one hundred eighty days within a calendar year; or

• One thousand or more people for two or more consecutive days within a calendar year.

"Group B water system" means a public water system:

(a) Constructed to serve less than fifteen residential services regardless of the number of people; or

(b) Constructed to serve an average nonresidential population of less than twenty-five per day for sixty or more days within a calendar year; or

(c) Any number of people for less than sixty days within a calendar year.

"Habitable room" means a room or space in a structure with a minimum seven-foot ceiling used for living, sleeping, eating, or cooking. Bathrooms, toilet compartments, closets, halls, storage or utility space, and similar areas are not considered habitable space.

"Health officer" means the individual appointed as such for a local health department under chapter 70.05 RCW or appointed as the director of public health of a combined city-county health department under chapter 70.08 RCW.

"Livestock" means horses, cows, pigs, sheep, goats, poultry, etc.

"Livestock operation" means any place, establishment, or facility consisting of pens or other enclosures in which livestock is kept for purposes including, but not limited to, feeding, milking, slaughter, watering, weighing, sorting, receiving, and shipping. Livestock operations include, among other things, dairy farms, corrals, slaughterhouses, feedlots, and stockyards. Operations where livestock can roam on a pasture over a distance may be treated as outside the definition.

"MSPA" means the Migrant and Seasonal Agricultural Worker Protection Act (96 Stat. 2583; 29 U.S.C. Sec. 1801 et seq.).

"Occupant" means a temporary worker or a person who resides with a temporary worker at the housing site.

"Operating license" means a document issued annually by the department of health or contracted health officer authorizing the use of temporary worker housing.

"Operator" means a person holding legal title to the land on which temporary worker housing is located. However, if the legal title and the right to possession are in different persons, "operator" means a person having the lawful control or supervision over the temporary worker housing.

"Recreational park trailers" means a trailer-type unit that is primarily designed to provide temporary living quarters for recreational, camping, or seasonal use, that meets the following criteria:

• Built on a single chassis, mounted on wheels;

• Having a gross trailer area not exceeding 400 square feet (37.15 square meters) in the set-up mode; and

• Certified by the manufacturer as complying with ANSI A119.5.

"Recreational vehicle" means a vehicular-type unit primarily designed as temporary living quarters for recreational camping, travel, or seasonal use that either has its own motive of power or is mounted on, or towed by, another vehicle. Recreational vehicles include: Camping trailers, fifth-wheel trailers, motor homes, travel trailers, and truck campers, but does not include pickup trucks with camper shells, canopies, or other similar coverings.

"Refuse" means solid wastes, rubbish, or garbage.

"Temporary worker" means an agricultural employee employed intermittently and not residing year-round at the same site.

"Temporary worker housing" or **"housing"** means a place, area, or piece of land where sleeping places or housing sites are provided by an agricultural employer for agricultural employees or by another person, including a temporary worker housing operator, who is providing such accommodations for employees for temporary, seasonal occupancy.

"WISHA" means the Washington Industrial Safety and Health Act, chapter 49.17 RCW, administered by the Washington state department of labor and industries.

[Statutory Authority: RCW 49.17.010, [49.17].040, and [49.17].050 and 1999 c 374. 00-06-081, § 296-307-16103, filed 3/1/00, effective 3/1/00.]

WAC 296-307-16105 Operating license. The operator:

(1) Must request a license from the department of health or health officer when:

(a) Housing consists of:

(i) Five or more dwelling units; or

(ii) Any combination of dwelling units, or spaces that house ten or more occupants.

(b) Compliance with MSPA requires a license; or

(c) Construction of camp buildings requires a license under chapter 246-359 WAC, Temporary worker housing construction standard.

(2) Must apply for an operating license at least forty-five days prior to either the use of housing or the expiration of an existing operating license by submitting to the department of health or health officer:

(a) A completed application on a form provided by the department of health or health officer;

(b) Proof water system is current with all water tests required by chapters 246-290 or 246-291 WAC; and

(c) A fee as specified in WAC 246-358-990.

(3) Will receive an operating license for the maximum number of occupants as determined by WAC 246-358-029 when:

(a) The application requirements from subsection (2) of this section are met;

(b) The housing is in compliance with this part as demonstrated by:

(i) A licensing survey completed by the department of health; or

(ii) A self-survey completed by the operator and approved by the department of health; and

(c) The operator complies with the corrective action plan established by the department.

(4) May allow the use of housing without a renewed license when all of the following conditions exist:

(a) The operator applied for renewal of an operating license in accordance with subsection (2) of this section at least forty-five days before occupancy, as evidenced by the post mark;

(b) The department of health or health officer has not inspected the housing or issued an operating license;

(c) Other local, state, or federal laws, rules, or codes do not prohibit use of the housing; and

(d) The operator provides and maintains housing in compliance with this part.

(5) Must post the operating license in a place readily accessible to occupants of the housing.

(6) Must notify the department of health or health officer of a transfer of ownership.

(7) Must cooperate with the department or health officer during on-site inspections.

[Statutory Authority: RCW 49.17.010, [49.17].040, and [49.17].050 and 1999 c 374. 00-06-081, § 296-307-16105, filed 3/1/00, effective 3/1/00.]

WAC 296-307-16110 Requirements for self-survey program. If a licensed operator meets the requirements provided in this section, then the operator may participate in the self-survey program. This means an operator is allowed to conduct a self-survey for two years. On the third year the department of health will conduct an on-site verification survey to assure compliance with this chapter and determine if the temporary worker housing still meets the requirements of the self-survey program.

(1) To be in the self-survey program the operator must:

(a) Meet the requirements of WAC 246-358-025;

(b) Not have had any valid complaints;

(c) Have had two consecutive years without any deficiencies or have had very minor deficiencies (for example one or two screens torn, missing a few small trash cans, etc.); and

(d) Be recommended by the health surveyor.

(2) For a licensed operator to remain in the self-survey program the licensed operator must:

(a) Continue to comply with subsection (1) of this section;

(b) Continue to not have any deficiencies or very minor deficiencies; and

(c) Not have a change in ownership.

(3) When licensed temporary worker housing changes ownership, the new licensed operator must comply with the requirements of subsection (1) of this section before being eligible to be on the self-survey program.

[Statutory Authority: RCW 49.17.010, [49.17].040, and [49.17].050 and 1999 c 374. 00-06-081, § 296-307-16110, filed 3/1/00, effective 3/1/00.]

WAC 296-307-16115 Maximum housing occupancy. (1) The maximum occupancy for operator-supplied housing will be based on:

(a) The square footage of the housing facility; and

(b) The number of bathing, food handling, handwashing, laundry, and toilet facilities.

(2) The maximum occupancy for worker-supplied housing will be based on:

(a) The number of spaces designated for worker-supplied housing by the operator; and

(b) The number of bathing, food handling, handwashing, laundry, and toilet facilities in excess of those facilities required for operator-supplied housing.

Note: Worker-supplied housing includes recreational park trailers, recreation vehicles, OSHA compliant tents, or other structures that meet the requirements of this part.

[Statutory Authority: RCW 49.17.010, [49.17].040, and [49.17].050 and 1999 c 374. 00-06-081, § 296-307-16115, filed 3/1/00, effective 3/1/00.]

WAC 296-307-16120 Variance and procedure. Conditions may exist in operations that a state standard will not have practical use. The director of the department of labor and industries may issue a variance from the requirements of the standard when another means of providing equal protection is provided. The substitute means must provide equal protection in accordance with the requirements of chapter 49.17 RCW and chapter 296-350 WAC, variances.

Applications for variances will be reviewed and may be investigated by the department of labor and industries and the department of health. Variances granted will be limited to the specific case or cases covered in the application and may be revoked for cause. The variance shall remain prominently posted on the premises while in effect.

Variance application forms may be obtained from the Department of Labor and Industries, P.O. Box 44625, Olympia, Washington 98504-4625 or the Department of Health, P.O. Box 47852, Olympia, Washington 98504-7852, upon

request. Requests for variances from safety and health standards shall be made in writing to the director or the assistant director, Department of Labor and Industries, P.O. Box 44625, Olympia, Washington 98504-4625. (Reference RCW 49.17.080 and 49.17.090.)

[Statutory Authority: RCW 49.17.010, [49.17].040, and [49.17].050 and 1999 c 374. 00-06-081, § 296-307-16120, filed 3/1/00, effective 3/1/00.]

WAC 296-307-16125 Temporary worker housing sites. The operator must:

(1) Locate and operate a site to prevent a health or safety hazard that is:

(a) Adequately drained and any drainage from and through the housing must not endanger any domestic or public water supply;

(b) Free from periodic flooding and depressions in which water may become a nuisance;

(c) At least two hundred feet from a swamp, pool, sink hole, or other surface collection of water unless there is a mosquito prevention program for those areas;

(d) Large enough to prevent overcrowding of necessary structures. The principal housing area for sleeping and for food preparation and eating must be at least five hundred feet from where livestock are kept; and

(e) The grounds and open areas surrounding the shelters must be in a clean and sanitary condition.

(2) Must develop and implement a temporary worker housing management plan and rules for operators with ten or more occupants, to assure that the housing is operated in a safe and secure manner and is kept within the approved capacity. Additionally, the licensed operator must:

(a) Inform occupants of the rules, in a language the occupant understands by providing individual copies of the rules to each occupant or posting the rules in the housing area;

(b) Restrict the number of occupants in the temporary worker housing to the capacity as determined by the department.

(3) When closing housing permanently or for the season, complete the following:

(a) Dispose of all refuse to prevent nuisance;

(b) Fill all abandoned toilet pits with earth; and

(c) Leave the grounds and buildings in a clean and sanitary condition.

[Statutory Authority: RCW 49.17.010, [49.17].040, and [49.17].050 and 1999 c 374. 00-06-081, § 296-307-16125, filed 3/1/00, effective 3/1/00.]

WAC 296-307-16130 Water supply. The operator must:

(1) Provide a water system that is:

(a) Approved as a Group A public water system in compliance with chapter 246-290 WAC if the water system supplies fifteen or more connections or twenty-five or more people at least sixty days per year or provide proof the temporary worker housing receives water from an approved Group A public water system; or

(b) Approved as a Group B water system in compliance with chapter 246-291 WAC if the water system supplies less than fifteen connections and does not supply twenty-five or more people at least sixty days per year.

Note: A "same farm exemption" applies to a public water system with four or fewer connections all of which serve residences on the same farm. "Same farm" means a parcel of land or series of parcels that are connected by covenants and devoted to the production of livestock or agricultural commodities for commercial purposes and does not qualify as a Group A water system.

	Avg. of less than 25 people	Avg. of 25 or more people
At least 60 days or more	Group B	Group A TNC
59 days or less	Group B	Group B

Note: If a system has fifteen or more connections, regardless of the population, it is a Group A water system.

(2) Provide an adequate and convenient hot and cold water supply for drinking, cooking, bathing, and laundry purposes.

Note: An "adequate water supply" means the storage capacity of the potable water system must meet the requirements of ASHRAE 1999 Applications Handbook, chapter 48, Water Systems.

(3) Ensure that the distribution lines are able to maintain the working pressure of the water piping system at not less than fifteen pounds per square inch after allowing for friction and other pressure losses.

(4) When water is not piped to each dwelling unit, provide cold, potable, running water under pressure within one hundred feet of each dwelling unit.

(5) When water sources are not available in each individual dwelling unit, provide one or more drinking fountains for each one hundred occupants or fraction thereof. Prohibit the use of common drinking cups or containers from which water is dipped or poured.

(6) When water is unsafe for drinking purposes and accessible to occupants, post a sign by the source reading "Do not drink. Do not use for washing. Do not use for preparing food" printed in English and in the native language of the persons occupying the housing, or marked with easily understood pictures or symbols.

[Statutory Authority: RCW 49.17.010, [49.17].040, and [49.17].050 and 1999 c 374. 00-06-081, § 296-307-16130, filed 3/1/00, effective 3/1/00.]

WAC 296-307-16135 Sewage disposal. The operator must:

(1) Provide sewage disposal systems in accordance with local health jurisdictions.

(2) Connect all drain, waste, and vent systems from buildings to:

(a) Public sewers, if available; or

(b) Approved on-site sewage disposal systems that are designed, constructed, and maintained as required in chapters 246-272 and 173-240 WAC, and local ordinances.

[Statutory Authority: RCW 49.17.010, [49.17].040, and [49.17].050 and 1999 c 374. 00-06-081, § 296-307-16135, filed 3/1/00, effective 3/1/00.]

WAC 296-307-16140 Electricity and lighting. The operator must ensure that:

(1) Electricity is supplied to all dwelling units, kitchen facilities, shower/bathroom facilities, common areas, and laundry facilities;

(2) All electrical wiring, fixtures and electrical equipment must comply with the electric standards of the depart-

ment of labor and industries regulations, chapter 19.28 RCW, and local ordinances, and be maintained in a safe condition;

(3) Each habitable room must have at least one ceiling-type light fixture and at least one separate floor-type or wall-type convenience outlet;

(4) Laundry, toilet rooms, shower/bathroom facilities, and rooms where people congregate have at least one ceiling-type or wall-type fixture;

(5) General lighting and task lighting is adequate to carry on normal daily activities;

(6) Adequate lighting is provided for safe passage for occupants to handwashing sinks and toilets. Note: Lighting requirements may be met by natural or artificial means.

[Statutory Authority: RCW 49.17.010, [49.17].040, and [49.17].050 and 1999 c 374. 00-06-081, § 296-307-16140, filed 3/1/00, effective 3/1/00.]

WAC 296-307-16145 Building requirements and maintenance. An operator must:

(1) Construct buildings to provide protection against the elements and comply with:

(a) The State Building Code, chapter 19.27 RCW, or Temporary worker housing construction standard, chapter 246-359 WAC;

(b) State and local ordinances, codes, regulations; and

(c) This part. Any shelter meeting these requirements is acceptable.

(2) Identify each dwelling unit and space used for shelter by posting a number at each site.

(3) Maintain buildings in good repair and sanitary condition.

(4) Provide exits that are unobstructed and remain free of any material or matter where its presence would obstruct or render the exit hazardous.

(5) Provide a ceiling height of at least seven feet for each habitable room. If a building has a sloped ceiling, no portion of the room measuring less than seven feet from the finished floor to the finished ceiling will be included in any computation of the minimum floor space.

(6) Provide at least seventy square feet of floor space for the first occupant and at least fifty square feet of floor space for each additional occupant in each dwelling unit.

(7) Provide each room used for sleeping purposes with at least fifty square feet of floor space for each occupant.

(8) Provide floors in accordance with the State Building Code, chapter 19.27 RCW, or Temporary worker housing construction standard, chapter 246-359 WAC, that are tightly constructed and in good repair.

(9) Ensure wooden floors are at least one foot above ground level or meet the requirements in the State Building Code, chapter 19.27 RCW or Temporary worker housing construction standard, chapter 246-359 WAC.

(10) Provide habitable rooms that have:

(a) Windows covering a total area equal to at least one-tenth of the total floor area and at least one-half of each window can be opened to the outside for ventilation; or

(b) Mechanical ventilation in accordance with applicable ASHRAE standards.

(11) Provide sixteen-mesh screening on all exterior openings and screen doors with self-closing devices.

(12) Install all heating, cooking, and water heating equipment according to state and local ordinances, codes, and regulations and maintain in a safe condition.

(13) Provide adequate heating equipment if habitable rooms, including bathrooms, are used during cold weather.

(14) Ensure that all recreational vehicles and park trailers meet the requirements of chapters 296-150P and 296-150R WAC.

[Statutory Authority: RCW 49.17.010, [49.17].040, and [49.17].050 and 1999 c 374. 00-06-081, § 296-307-16145, filed 3/1/00, effective 3/1/00.]

WAC 296-307-16150 Laundry facilities. An operator must:

(1) Provide one laundry tray or tub or one mechanical washing machine for every thirty persons;

(2) Provide facilities for drying clothes;

(3) Provide sloped, coved floors of nonslip impervious materials with floor drains;

(4) Maintain laundry facilities in a clean and sanitary condition.

[Statutory Authority: RCW 49.17.010, [49.17].040, and [49.17].050 and 1999 c 374. 00-06-081, § 296-307-16150, filed 3/1/00, effective 3/1/00.]

WAC 296-307-16155 Handwashing and bathing facilities. An operator must:

(1) Provide one handwash sink for each family dwelling unit or for every six persons in centralized facilities. Handwash sinks must be adjacent to toilets;

(2) Provide one showerhead for each family dwelling unit or for every ten persons in centralized facilities;

(3) Provide one "service sink" in each building used for centralized laundry, handwashing, or bathing;

(4) Provide sloped, coved floors of nonslip impervious materials with floor drains;

(5) Ensure shower room walls are smooth and nonabsorbent to the height of four feet. If used, partitions must be smooth and nonabsorbent to the height of four feet;

(6) Provide all showers, baths, or shower rooms with floor drains to remove wastewater;

(7) Provide cleanable, nonabsorbent waste containers;

(8) Maintain centralized bathing and handwashing facilities in a clean and sanitary condition, cleaned at least daily;

(9) Request occupants of family dwelling units to maintain bathing and handwashing facilities in a clean and sanitary condition;

(10) Ensure shower facilities provide privacy from the opposite sex and the public; and

(11) Make showers and bathing facilities available when needed.

[Statutory Authority: RCW 49.17.010, [49.17].040, and [49.17].050 and 1999 c 374. 00-06-081, § 296-307-16155, filed 3/1/00, effective 3/1/00.]

WAC 296-307-16160 Toilet facilities. (1) General toilet requirements. Operators must provide flush toilets unless chemical toilets or pit privies are specifically approved by the department of health or health officer according to requirements in chapter 246-272 WAC and ensure the following:

(a) Flush toilets, chemical toilets, and urinals must not be located in any sleeping room, dining room, cooking or food-handling facility.

(b) When chemical toilets are approved, they must be:

(i) Located at least fifty feet from any dwelling unit or food-handling facility;

(ii) Maintained by a licensed waste disposal company; and

(iii) Comply with local ordinances;

(c) When urinals are provided:

(i) There must be one urinal or two linear feet of urinal trough for each twenty-five men;

(ii) The floors and the walls surrounding a urinal and extending out at least fifteen inches on all sides must be constructed of materials which will not be adversely affected by moisture;

(iii) The urinal must have an adequate water flush where water under pressure is available; and

(iv) Urinal troughs are prohibited in pit privies.

(d) When pit privies are approved they must be:

(i) At least one hundred feet away from any sleeping room, dining room, cooking, or food-handling facilities; and

(ii) Constructed to exclude insects and rodents from the pit.

(2) Centralized toilet facilities. The operator must meet the following requirements when centralized toilet facilities are provided:

(a) Provide toilet rooms with:

(i) One toilet for every fifteen persons;

(ii) One handwashing sink for every six persons;

(iii) Either a window of at least six square feet opening directly to the outside, or be satisfactorily ventilated; and

(iv) All outside openings screened with sixteen-mesh material;

(b) Locate toilet rooms so that:

(i) Toilets are within two hundred feet of the door of each sleeping room; and

(ii) No person has to pass through a sleeping room to reach a toilet room.

(c) Maintain toilets in a clean and sanitary condition, cleaned at least daily;

(d) Provide each toilet compartment with an adequate supply of toilet paper;

(e) When shared facilities will be used for both men and women:

(i) Provide separate toilet rooms for each sex with a minimum of one toilet room for each sex and meet the required ratio as defined in (a) of this subsection;

(ii) Identify each room for "men" and "women" with signs printed in English and in the native language of the persons occupying the camp, or identified with easily understood pictures or symbols; and

(iii) Separate facilities by solid walls or partitions extending from the floor to the roof or ceiling when facilities for each sex are located in the same building.

(3) Individual family/unit dwelling toilet requirements. If providing flush toilets in individual cabins, apartments, or houses, the operator must:

(a) Provide one toilet for each individual family dwelling unit or fifteen persons;

(b) Provide one handwashing sink for each six persons. The sink must be located in the toilet room or immediately adjacent;

(c) Provide a window of at least six square feet opening directly to the outside, or be satisfactorily ventilated;

(d) Ensure all outside openings screened with sixteen-mesh material;

(e) Ensure toilet facilities are cleaned prior to occupancy and request occupants to maintain the facilities in a clean and sanitary condition.

[Statutory Authority: RCW 49.17.010, [49.17].040, and [49.17].050 and 1999 c 374. 00-06-081, § 296-307-16160, filed 3/1/00, effective 3/1/00.]

WAC 296-307-16165 Cooking and food-handling facilities. The operator must provide enclosed or screened cooking and food-handling facilities for all occupants. The operator must provide adequate tables and seating for occupants.

(1) If cooking facilities are located in dwelling units, the operator must provide:

(a) An operable cook stove or hot plate with at least one cooking surface for every two occupants;

(b) A sink with hot and cold running potable water under pressure;

(c) At least two (2) cubic feet of dry food storage space per occupant;

(d) Nonabsorbent, easily cleanable food preparation counters situated off the floor;

(e) Mechanical refrigeration conveniently located and able to maintain a temperature of forty-five degrees Fahrenheit or below, with at least two (2) cubic feet of storage space per occupant;

(f) Fire-resistant, nonabsorbent, nonasbestos, and easily cleanable wall coverings adjacent to cooking areas;

(g) Nonabsorbent, easily cleanable floors; and

(h) Adequate ventilation for cooking facilities.

(2) In common food-handling facilities, the operator must provide:

(a) A room or building, adequate in size, separate from any sleeping quarters;

(b) No direct openings to living or sleeping areas from the common food-handling facility;

(c) An operable cook stove or hot plate with at least one cooking surface for every four occupants, or four cooking surfaces for every two families;

(d) Sinks with hot and cold running potable water under pressure;

(e) At least two (2) cubic feet of dry food storage space per occupant;

(f) Nonabsorbent, easily cleanable food preparation counters situated off the floor;

(g) Mechanical refrigeration conveniently located and able to maintain a temperature of forty-five degrees Fahrenheit or below, with at least two (2) cubic feet of storage space per occupant;

(h) Fire-resistant, nonabsorbent, nonasbestos, and easily cleanable wall coverings adjacent to cooking areas;

(i) Nonabsorbent, easily cleanable floors; and

(j) Adequate ventilation for cooking facilities.

(3) The operator must ensure that centralized dining hall facilities comply with chapter 246-215 WAC, Food service.

[Statutory Authority: RCW 49.17.010, [49.17].040, and [49.17].050 and 1999 c 374. 00-06-081, § 296-307-16165, filed 3/1/00, effective 3/1/00.]

WAC 296-307-16170 Cots, beds, bedding, and personal storage. The operator must:

(1) Provide beds, cots, or bunks furnished with clean mattresses in good condition for the maximum occupancy approved by the department of health or health officer for operator-supplied housing;

(2) Maintain bedding, if provided by the operator, in a clean and sanitary condition;

(3) Provide sufficient clearance between each cot, bed or bunk and the floor or a commercially available cot, bed, or bunk;

(4) Allow space to separate beds laterally and end-to-end by at least thirty-six inches when single beds are used;

(5) Meet the following requirements when bunk beds are used:

(a) Allow space to separate beds laterally and end-to-end by at least forty-eight inches;

(b) Maintain a minimum space of twenty-seven inches between the upper and lower bunks; and

(c) Prohibit triple bunks; and

(6) Provide storage facilities for clothing and personal articles in each room used for sleeping.

[Statutory Authority: RCW 49.17.010, [49.17].040, and [49.17].050 and 1999 c 374. 00-06-081, § 296-307-16170, filed 3/1/00, effective 3/1/00.]

WAC 296-307-16175 First aid and safety. The operator must:

(1) Comply with chapters 15.58 and 17.21 RCW and chapters 16-228 and 296-307 WAC, Parts I and J, and pesticide label instructions when using pesticides in and around the housing;

(2) Prohibit, in the housing area, the use, storage, and mixing of flammable, volatile, or toxic substances other than those intended for household use;

(3) Provide readily accessible first-aid equipment;

(4) Ensure that a first-aid qualified person is readily accessible to administer first aid at all times;

(5) Store or remove unused refrigerator units to prevent access by children.

[Statutory Authority: RCW 49.17.010, [49.17].040, and [49.17].050 and 1999 c 374. 00-06-081, § 296-307-16175, filed 3/1/00, effective 3/1/00.]

WAC 296-307-16180 Refuse disposal. The operator must:

(1) Comply with local sanitation codes for removing and disposing of refuse from housing areas;

(2) Protect against rodent harborage, insect breeding, and other health hazards while storing, collecting, transporting, and disposing of refuse;

(3) Store refuse in fly-tight, rodent-tight, impervious, and cleanable or single-use containers;

(4) Keep refuse containers clean;

(5) Provide a container on a wooden, metal, or concrete stand within one hundred feet of each dwelling unit;

(6) Empty refuse containers at least twice each week, and when full.

[Statutory Authority: RCW 49.17.010, [49.17].040, and [49.17].050 and 1999 c 374. 00-06-081, § 296-307-16180, filed 3/1/00, effective 3/1/00.]

WAC 296-307-16185 Insect and rodent control. The operator must take effective measures to prevent and control insect and rodent infestation.

[Statutory Authority: RCW 49.17.010, [49.17].040, and [49.17].050 and 1999 c 374. 00-06-081, § 296-307-16185, filed 3/1/00, effective 3/1/00.]

WAC 296-307-16190 Disease prevention and control. The operator must:

(1) Report immediately to the local health officer the name and address of any individual in the camp known to have or suspected of having a communicable disease;

(2) Report immediately to the local health officer:

(a) Suspected food poisoning;

(b) An unusual prevalence of fever, diarrhea, sore throat, vomiting, or jaundice; or

(c) Productive cough, or when weight loss is a prominent symptom among occupants;

(3) Prohibit any individual with a communicable disease from preparing, cooking, serving, or handling food, foodstuffs, or materials in dining halls.

[Statutory Authority: RCW 49.17.010, [49.17].040, and [49.17].050 and 1999 c 374. 00-06-081, § 296-307-16190, filed 3/1/00, effective 3/1/00.]

Part L-1
Cherry Harvest Camps

WAC 296-307-163 Cherry harvest camps.

[Statutory Authority: RCW 49.17.010, [49.17].040, and [49.17].050 and 1999 c 374. 00-06-081, § 296-307-163, filed 3/1/00, effective 3/1/00.]

WAC 296-307-16301 Purpose and applicability. (1) Purpose. This part is adopted by the Washington state department of labor and industries, to implement the provisions of chapter 49.17 RCW and establish minimum health and safety requirements for cherry harvest camps.

(2) Applicability.

(a) This part applies only to operators of cherry harvest camps using tents during the cherry harvest season. Operators using other housing must refer to WAC 296-307-161, Part L, or chapter 246-358 WAC.

(b) Operators with ten or more occupants are required to be licensed under this part. Operators with nine or less employees are not required to be licensed, but must comply with these standards.

(c) For department of health licensing, on-site survey, and water test fees, see WAC 246-361-990.

[Statutory Authority: RCW 49.17.010, [49.17].040, and [49.17].050 and 1999 c 374. 00-06-081, § 296-307-16301, filed 3/1/00, effective 3/1/00.]

WAC 296-307-16303 Definitions. For the purposes of this part, the following words and phrases will have the following meanings unless the context clearly indicates otherwise:

"Building" means any structure used or intended to be used for supporting or sheltering any use or occupancy that may include cooking, eating, sleeping, and sanitation facilities.

"Cherry harvest camp" or **"camp"** means a place, area, or piece of land where dwelling units or campsites are provided by an operator during the cherry harvest.

"Common food-handling facility" means an area designated by the operator for occupants to store, prepare, cook, and eat their own food supplies.

"Current certificate (first aid)" means a first-aid training certificate that has not expired.

"Department" means the Washington state department of health and/or the department of labor and industries.

"Dining hall" means a cafeteria-type eating place with food furnished by and prepared under the direction of the operator for consumption, with or without charge, by occupants.

"Drinking fountain" means a fixture equal to a nationally recognized standard or a designed-to-drain faucet, which provides potable drinking water under pressure. "Drinking fountain" does not mean a bubble-type water dispenser.

"Dwelling unit" means a shelter, building, or portion of a building, that may include cooking and eating facilities, which is:

• Provided and designated by the operator as either a sleeping area, living area, or both, for occupants; and

• Physically separated from other sleeping and common-use areas.

Note: For the purpose of this Part L1, a "tent" is considered a dwelling unit.

"First-aid qualified" means that the person holds a current certificate of first-aid training from the American Red Cross or another course with equivalent content or hours.

"Food-handling facility" means a designated, enclosed area for preparation of food.

"Group A water system" means a public water system and includes community and noncommunity water systems.

(a) A community water system means any Group A water system providing service to fifteen or more service connections used by year-round residents for one hundred eighty or more days within a calendar year, regardless of the number of people, or regularly serving at least twenty-five year-round (i.e., more than one hundred eighty days per year) residents.

(b) A noncommunity water system means a Group A water system that is not a community water system. Noncommunity water systems are further defined as:

(i) Nontransient (NTNC) water system that provides service opportunity to twenty-five or more of the same nonresidential people for one hundred eighty or more days within a calendar year.

(ii) Transient (TNC) water system that services:

• Twenty-five or more different people each day for sixty or more days within a calendar year;

• Twenty-five or more of the same people each day for sixty or more days, but less than one hundred eighty days within a calendar year; or

• One thousand or more people for two or more consecutive days within a calendar year.

"Group B water system" means a public water system:

(a) Constructed to serve less than fifteen residential services regardless of the number of people; or

(b) Constructed to serve an average nonresidential population of less than twenty-five per day for sixty or more days within a calendar year; or

(c) Any number of people for less than sixty days within a calendar year.

"Health officer" means the individual appointed as such for a local health department under chapter 70.05 RCW or appointed as the director of public health of a combined city-county health department under chapter 70.08 RCW.

"Livestock" means horses, cows, pigs, sheep, goats, poultry, etc.

"Livestock operation" means any place, establishment, or facility consisting of pens or other enclosures in which livestock is kept for purposes including, but not limited to, feeding, milking, slaughter, watering, weighing, sorting, receiving, and shipping. Livestock operations include, among other things, dairy farms, corrals, slaughterhouses, feedlots, and stockyards. Operations where livestock can roam on a pasture over a distance may be treated as outside the definition.

"MSPA" means the Migrant and Seasonal Agricultural Worker Protection Act (96 Stat. 2583; 29 U.S.C. Sec. 1801 et seq.).

"Occupant" means a temporary worker or a person who resides with a temporary worker at the campsite.

"Operating license" means a document issued annually by the department of health or contracted health officer authorizing the use of temporary worker housing.

"Operator" means a person holding legal title to the land on which the camp is located. However, if the legal title and the right to possession are in different persons, "operator" means a person having the lawful control or supervision over the camp.

"Recreational park trailers" means a trailer-type unit that is primarily designed to provide temporary living quarters for recreational, camping, or seasonal use, that meets the following criteria:

• Built on a single chassis, mounted on wheels;

• Having a gross trailer area not exceeding 400 square feet (37.15 square meters) in the set-up mode; and

• Certified by the manufacturer as complying with ANSI A119.5.

"Recreational vehicle" means a vehicular-type unit primarily designed as temporary living quarters for recreational camping, travel, or seasonal use that either has its own mode of power or is mounted on, or towed by, another vehicle. Recreational vehicles include: Camping trailers, fifth-wheel trailers, motor homes, travel trailers, and truck campers, but does not include pickup trucks with camper shells, canopies or other similar coverings.

"Refuse" means solid wastes, rubbish, or garbage.

"Temporary worker" means an agricultural employee employed intermittently and not residing year-round at the same site.

"Tent" means an enclosure or shelter constructed of fabric or pliable material composed of rigid framework to support tensioned membrane that provides the weather barrier.

"WISHA" means the Washington Industrial Safety and Health Act, chapter 49.17 RCW, administered by the Washington state department of labor and industries.

[Statutory Authority: RCW 49.17.010, [49.17].040, [49.17].050, and [49.17].060. 02-23-072, § 296-307-16303, filed 11/19/02, effective 1/1/03. Statutory Authority: RCW 49.17.010, [49.17].040, and [49.17].050 and 1999 c 374. 00-06-081, § 296-307-16303, filed 3/1/00, effective 3/1/00.]

WAC 296-307-16305 Technical assistance. An operator may request technical assistance from the department of health or the department of labor and industries to assist in compliance with this part.

[Statutory Authority: RCW 49.17.010, [49.17].040, and [49.17].050 and 1999 c 374. 00-06-081, § 296-307-16305, filed 3/1/00, effective 3/1/00.]

WAC 296-307-16310 Operating license. A cherry tent camp license is limited to one week before the commencement through one week following the conclusion of the cherry harvest within the state.

The operator:

(1) Must request a license from the department of health or health officer when:

(a) The camp will house ten or more occupants;

(b) Compliance with MSPA requires a license; or

(c) Construction of camp buildings requires a license under chapter 246-359 WAC, Temporary worker housing construction standard.

(2) Must apply for an operating license at least forty-five days prior to either the use of the camp or the expiration of an existing operating license by submitting to the department of health or health officer:

(a) A completed application on a form provided by the department or health officer;

(b) Proof water system is current with all water tests required by chapter 246-290 or 246-291 WAC; and

(c) A fee as specified in WAC 246-361-990.

(3) Will receive an operating license for the maximum number of occupants as determined by WAC 246-361-030 when:

(a) The application requirements from subsection (2) of this section are met;

(b) The site is in compliance with this part as demonstrated by a licensing survey completed by the department; and

(c) The operator complies with the corrective action plan established by the department.

(4) Must post the operating license in a place readily accessible to workers.

(5) Must notify the department of health in the event of a transfer of ownership.

(6) Must cooperate with the department during on-site inspections.

[Statutory Authority: RCW 49.17.010, [49.17].040, [49.17].050, and [49.17].060. 02-23-072, § 296-307-16310, filed 11/19/02, effective 1/1/03. Statutory Authority: RCW 49.17.010, [49.17].040, and [49.17].050 and 1999 c 374. 00-06-081, § 296-307-16310, filed 3/1/00, effective 3/1/00.]

WAC 296-307-16315 Maximum camp occupancy. The maximum occupancy for a camp will be based on:

(1) The number of shelters provided; and

(2) The number of bathing, food handling, handwashing, laundry, and toilet facilities.

[Statutory Authority: RCW 49.17.010, [49.17].040, and [49.17].050 and 1999 c 374. 00-06-081, § 296-307-16315, filed 3/1/00, effective 3/1/00.]

WAC 296-307-16320 Variance and procedure. Conditions may exist in operations that a state standard will not have practical use. The director of the department of labor and industries may issue a variance from the requirements of the standard when another means of providing equal protection is provided. The substitute means must provide equal protection in accordance with the requirements of chapter 49.17 RCW and chapter 296-350 WAC, variances.

Applications for variances will be reviewed and may be investigated by the department of labor and industries and the department of health. Variances granted will be limited to the specific case or cases covered in the application and may be revoked for cause. The variance must remain prominently posted on the premises while in effect.

Variance application forms may be obtained from the Department of Labor and Industries, P.O. Box 44625, Olympia, Washington 98504-4625 or the Department of Health, P.O. Box 47852, Olympia, Washington 98504-7852, upon request. Requests for variances from safety and health standards must be made in writing to the director or the assistant director, Department of Labor and Industries, P.O. Box 44625, Olympia, Washington 98504-4625. (Reference RCW 49.17.080 and 49.17.090.)

[Statutory Authority: RCW 49.17.010, [49.17].040, and [49.17].050 and 1999 c 374. 00-06-081, § 296-307-16320, filed 3/1/00, effective 3/1/00.]

WAC 296-307-16325 Cherry harvest campsites. The operator must:

(1) Locate and operate a site to prevent a health or safety hazard that is:

(a) Adequately drained and any drainage from and through the camp must not endanger any domestic or public water supply;

(b) Free from periodic flooding and depressions in which water may become a nuisance;

(c) At least two hundred feet from a swamp, pool, sink hole, or other surface collection of water unless there is a mosquito prevention program for those areas;

(d) Large enough to prevent overcrowding of necessary structures. The principal camp area for sleeping and for food preparation and eating must be at least five hundred feet from where livestock are kept; and

(e) Maintained in a clean and sanitary condition.

(2) Develop and implement a cherry harvest camp management plan and rules for camps with ten or more occupants, to assure that the camp is operated in a safe and secure manner and is kept within the approved capacity. Additionally, the licensed operator must:

(a) Inform residents of the rules, in a language the resident understands by providing individual copies of the rules to each camp resident or posting the rules in the camp area; and

(b) Restrict the number of occupants in the camp to the capacity as determined by the department.

(3) When closing the camp permanently or for the season, complete the following:

(a) Dispose of all refuse to prevent nuisance;

(b) Fill all abandoned toilet pits with earth; and

(c) Leave the grounds and buildings in a clean and sanitary condition.

[Statutory Authority: RCW 49.17.010, [49.17].040, and [49.17].050 and 1999 c 374. 00-06-081, § 296-307-16325, filed 3/1/00, effective 3/1/00.]

WAC 296-307-16330 Water supply. The operator must:

(1) Provide a water system that is:

(a) Approved as a Group A public water system in compliance with chapter 246-290 WAC if the water system supplies fifteen or more connections or twenty-five or more people at least sixty days per year or provide proof the camp receives water from an approved Group A public water system; or

(b) Approved as a Group B water system in compliance with chapter 246-291 WAC if the water system supplies less than fifteen connections and does not supply twenty-five or more people at least sixty days per year.

Note: A "same farm exemption" applies to a public water system with four or fewer connections all of which serve residences on the same farm. "Same farm" means a parcel of land or series of parcels that are connected by covenants and devoted to the production of livestock or agricultural commodities for commercial purposes and does not qualify as a Group A water system.

	Avg. of less than 25 people	Avg. of 25 or more people
At least 60 days or more	Group B	Group A TNC
59 days or less	Group B	Group B

Note: If a system has 15 or more connections, regardless of the population, it is a Group A water system.

(2) Provide an adequate and convenient hot and cold water supply for drinking, cooking, bathing, and laundry purposes.

Note: An "adequate water supply" means the storage capacity of the potable water system must meet the requirements of ASHRAE 1999 Applications Handbook, chapter 48, Water Systems.

(3) Ensure that the distribution lines are able to maintain the working pressure of the water piping system at not less than fifteen pounds per square inch after allowing for friction and other pressure losses.

(4) When water is not piped to each dwelling unit, provide cold, potable, running water under pressure within one hundred feet of each dwelling unit.

(5) When water sources are not available in each individual tent, provide one or more drinking fountains for each one hundred occupants or fraction thereof. Prohibit the use of common drinking cups or containers from which water is dipped or poured.

(6) When water is unsafe for drinking purposes and accessible to occupants, post a sign by the source reading "Do not drink. Do not use for washing. Do not use for preparing food" printed in English and in the native language of the persons occupying the camp, or marked with easily understood pictures or symbols.

[Statutory Authority: RCW 49.17.010, [49.17].040, and [49.17].050 and 1999 c 374. 00-06-081, § 296-307-16330, filed 3/1/00, effective 3/1/00.]

WAC 296-307-16335 Sewage disposal. An operator must:

(1) Provide sewage disposal systems in accordance with local health jurisdictions.

(2) Connect all drain, waste, and vent systems from buildings to:

(a) Public sewers, if available; or

(b) Approved on-site sewage disposal systems that are designed, constructed, and maintained as required in chapters 246-272 and 173-240 WAC, and local ordinances.

[Statutory Authority: RCW 49.17.010, [49.17].040, and [49.17].050 and 1999 c 374. 00-06-081, § 296-307-16335, filed 3/1/00, effective 3/1/00.]

WAC 296-307-16340 Electricity and lighting. (1) General electricity requirements.

(a) The operator must supply electricity to all dwelling units, kitchen facilities, bathroom facilities, common areas, and laundry facilities.

(b) All electrical wiring, fixtures and electrical equipment must comply with department of labor and industries regulations, chapter 19.28 RCW and local ordinances, and maintained in a safe condition.

(2) Electricity requirements in tents.

(a) Each individual tent must have at least one separate floor-type or wall-type convenience outlet. If the operator provides a refrigerator in the tent, a dedicated outlet must be provided for it.

(b) All electrical wiring and equipment installed in tents must meet the requirements of WAC 296-45-045.

(c) All electrical appliances to be connected to the electrical supply must meet the requirements for the load calculations as required by chapter 19.28 RCW.

(d) Electrical wiring exiting the tent to connect to the GFI outside outlet must be placed in approved flexible conduit not to exceed six feet in length.

(e) All wiring located inside the tent must be placed in conduit for protection and connected to a surface to secure the wiring to prevent movement. Wiring must be located to prevent tripping or safety hazards.

(f) Receptacles and lighting fixtures must be UL Listed and approved by the department for use in the tent.

(3) General lighting requirements.

(a) The operator must provide adequate lighting sufficient to carry on normal daily activities in all common use areas.

(b) Laundry and toilet rooms and rooms where people congregate must have at least one ceiling-type or wall-type fixture. Where portable toilets are used, lighting requirements can be met by area illumination.

(c) The operator must provide adequate lighting for safe passage for camp occupants to handwashing sinks and toilets.

(d) The operator must provide adequate lighting for shower rooms during hours of operation.

Note: Lighting requirements may be met by natural or artificial means.

(4) Lighting requirements in tents.

(a) Tents must have adequate lighting sufficient to carry on all normal daily activities. For example: Three 100-watt bulbs located at the top ridge of the frame and are UL Listed or equivalent.

(b) Each tent must have at least one ceiling-type light fixture.

(c) Food preparation areas, if located in the tent, must have at least one lighting fixture located to provide task lighting over the food preparation area.

(d) Alternate lighting appliances must provide adequate lighting. In addition, if using two or more propane, butane, or white gas lighting appliances, a carbon monoxide monitor must be provided and located not more than thirty inches from the floor.

[Statutory Authority: RCW 49.17.010, 49.17.040, 49.17.050, 49.17.060. 05-01-166, § 296-307-16340, filed 12/21/04, effective 4/2/05. Statutory Authority: RCW 49.17.010, [49.17].040, and [49.17].050 and 1999 c 374. 00-06-081, § 296-307-16340, filed 3/1/00, effective 3/1/00.]

WAC 296-307-16345 Tents. (1) Tents must provide protection from the elements.

(2) Structural stability and floors.

(a) Tents and their supporting framework must be adequately braced and anchored to prevent weather related collapse. Documentation of the structural stability must be furnished to the department.

(b) Floors must be smooth, flat, and without breaks or holes to provide a hard, stable walking surface. Nonrigid flooring supported by grass, dirt, soil, gravel, etc., are not acceptable. Floors that are constructed of wood or concrete must comply with the building code, chapter 19.27 RCW or temporary worker housing construction standard, chapter 246-359 WAC.

(c) Floor systems must be designed to prevent the entrance of snakes and rodents.

(3) Flame-retardant treatments.

(a) The sidewalls, drops, and tops of tents must be composed of flame-resistant material or treated with a flame retardant in an approved manner.

(b) Floor coverings, which are integral to the tent, and the bunting must be composed of flame-resistant material or treated with a flame retardant in an approved manner and in accordance with Uniform Building Code, Standard 31.1.

(c) All tents must have a permanently affixed label bearing the following information:

(i) Identification of tent size and fabric or material type;

(ii) For flame-resistant materials, the necessary information to determine compliance with this section and National Fire Protection Association Standard 701, Standard Methods of Fire Tests for Flame-resistant Textiles and Films;

(iii) For flame-retardant materials, the date that the tent was last treated with an approved flame-retardant;

(iv) The trade name and type of flame-retardant utilized in the flame-retardant treatment; and

(v) The name of the person and firm that applied the flame retardant.

(4) Means of egress.

(a) At least one door must lead to the outside of the tent and the area designated for refuge must be accessible and remain clear of storage materials or hazards.

(b) The door must not be obstructed in any manner and must remain free of any material or matter where its presence would obstruct or render the exit hazardous.

(c) If cooking facilities are provided in tents, the window located opposite the door must have a means to open the window or provide an easily openable space. For example, a zipper which opens downward toward the floor.

(5) Floor area. The operator must:

(a) If cooking facilities are provided in the tent, provide at least seventy square feet of floor space for one occupant and fifty square feet for each additional occupant; or

(b) If cooking facilities are **not** provided in the tent, provide at least fifty square feet of floor space for each occupant in rooms used for sleeping purposes.

(6) Ceiling height.

(a) If the tent has a sloped ceiling, a ceiling height of at least seven feet is required in fifty percent of the total area.

(b) No portion of the tent measuring less than six feet from the flooring to the ceiling will be included in any computation of the minimum floor area.

(7) Windows and ventilation.

(a) Provide a window area equal to one-tenth of the total floor area in each habitable room which opens at least halfway or more directly to the outside for cross-ventilation and has sixteen-mesh screens on all exterior openings.

(b) The windows must have weather-resistant flaps, which will cover the window area and a means of fastening the flaps to provide protection from the elements and allow privacy for the occupants.

[Statutory Authority: RCW 49.17.010, [49.17].040, and [49.17].050 and 1999 c 374. 00-06-081, § 296-307-16345, filed 3/1/00, effective 3/1/00.]

WAC 296-307-16350 Recreational vehicles. The operator must ensure that all recreational vehicles and park trailers meet the requirements of chapters 296-150P and 296-150R WAC.

[Statutory Authority: RCW 49.17.010, [49.17].040, and [49.17].050 and 1999 c 374. 00-06-081, § 296-307-16350, filed 3/1/00, effective 3/1/00.]

WAC 296-307-16355 Laundry facilities. An operator must:

(1) Provide one laundry tray or tub or one mechanical washing machine for every thirty persons;

(2) Provide facilities for drying clothes;

(3) Provide sloped, coved floors of nonslip impervious materials with floor drains;

(4) Maintain laundry facilities in a clean and sanitary condition.

[Statutory Authority: RCW 49.17.010, [49.17].040, and [49.17].050 and 1999 c 374. 00-06-081, § 296-307-16355, filed 3/1/00, effective 3/1/00.]

WAC 296-307-16360 Handwashing and bathing facilities. An operator must:

(1) Provide one handwash sink for every six persons in centralized facilities. Handwash sinks must be adjacent to toilets;

(2) Provide one showerhead for every ten persons in centralized facilities;

(3) Provide one "service sink" in each building used for centralized laundry, handwashing, or bathing;

(4) Provide sloped, coved floors of nonslip impervious materials with floor drains;

(5) Provide walls that are smooth and nonabsorbent to the height of four feet. If partitions are used, they must be smooth and nonabsorbent to the height of four feet;

(6) Provide all showers, baths, and shower rooms with floor drains to remove wastewater;

(7) Provide cleanable, nonabsorbent waste containers;

(8) Maintain bathing and handwashing facilities in a clean and sanitary condition, cleaned at least daily;

(9) Ensure shower facilities provide privacy from the opposite sex and the public;

(10) Make showers and bathing facilities available when needed.

[Statutory Authority: RCW 49.17.010, [49.17].040, and [49.17].050 and 1999 c 374. 00-06-081, § 296-307-16360, filed 3/1/00, effective 3/1/00.]

WAC 296-307-16365 Toilet facilities. (1) General toilet requirements. Operators must provide flush toilets, chemical toilets, or pit privies. The department of health or health officer, according to requirements in chapter 246-272 WAC, must approve pit privies. The operator must comply with the following:

(a) Flush toilets, chemical toilets, and urinals must not be located in any tent.

(b) When chemical toilets are provided, they must be:

(i) Located at least fifty feet from any dwelling unit or food-handling facility;

(ii) Maintained by a licensed waste disposal company; and

(iii) Comply with local ordinances.

(c) When urinals are provided:

(i) There must be one urinal or two linear feet of urinal trough for each twenty-five men;

(ii) The floors and walls surrounding a urinal and extending out at least fifteen inches on all sides must be constructed of materials which will not be adversely affected by moisture;

(iii) The urinal must have an adequate water flush where water under pressure is available; and

(iv) Urinal troughs are prohibited in pit privies.

(d) When pit privies are approved they must be:

(i) At least one hundred feet away from any dwelling unit or food-handling facility; and

(ii) Constructed to exclude insects and rodents from the pit.

(2) Centralized toilet facilities. The operator must meet the following requirements when centralized toilet facilities are provided:

(a) Provide toilet rooms with:

(i) One toilet for every fifteen persons;

(ii) One handwashing sink for every six persons;

(iii) Either a window of at least six square feet opening directly to the outside, or be satisfactorily ventilated; and

(iv) All outside openings screened with sixteen-mesh material.

(b) Locate toilet rooms so that:

(i) Toilets are within two hundred feet of the door of each tent; and

(ii) No person has to pass through a sleeping room to reach a toilet room;

(c) Maintain toilets in a clean and sanitary condition, cleaned at least daily;

(d) Provide each toilet compartment with an adequate supply of toilet paper;

(e) When shared facilities will be used for both men and women:

(i) Provide separate toilet rooms for each sex with a minimum of one toilet room for each sex and meet the required ratios as defined in (a) of this subsection;

(ii) Identify each room "men" and "women" with signs printed in English and in the native language of the persons occupying the camp, or identified with easily understood pictures or symbols; and

(iii) Separate facilities by solid walls or partitions extending from the floor to the roof or ceiling when facilities for each sex are located in the same building.

[Statutory Authority: RCW 49.17.010, [49.17].040, and [49.17].050 and 1999 c 374. 00-06-081, § 296-307-16365, filed 3/1/00, effective 3/1/00.]

WAC 296-307-16370 Cooking and food-handling facilities. The operator must provide enclosed or screened cooking and food-handling facilities for all occupants. The operator must provide adequate tables and seating for occupants.

(1) If the operator provides cooking facilities in tents, the operator must provide:

(a) An operable cook stove or hot plate with at least one cooking surface for every four occupants;

(b) A sink with hot and cold running potable water under pressure at each tent site;

(c) At least two (2) cubic feet of dry food storage space per occupant;

(d) Nonabsorbent, easily cleanable food preparation counters situated off the floor;

(e) Mechanical refrigeration conveniently located and able to maintain a temperature of forty-five degrees Fahrenheit or below, with at least one (1) cubic foot of storage space per occupant; and

(f) Adequate ventilation for cooking facilities.

(2) If the operator provides common food-handling facilities, the operator must provide:

(a) A room or building, adequate in size, separate from any tent;

(b) No direct openings to living or sleeping areas from the common food-handling facility;

(c) An operable cook stove or hot plate with at least one cooking surface for every four occupants, or four cooking surfaces for every two families;

(d) Sinks with hot and cold running potable water under pressure;

(e) At least two (2) cubic feet of dry food storage space per occupant;

(f) Nonabsorbent, easily cleanable food preparation counters situated off the floor;

(g) Mechanical refrigeration conveniently located and able to maintain a temperature of forty-five degrees Fahrenheit or below, with at least one (1) cubic foot of storage space per occupant;

(h) Fire-resistant, nonabsorbent, nonasbestos, and easily cleanable wall coverings adjacent to cooking areas;

(i) Nonabsorbent, easily cleanable floors; and

(j) Adequate ventilation for cooking facilities.

(3) The operator must ensure that dining hall facilities comply with chapter 246-215 WAC, Food service.

[Statutory Authority: RCW 49.17.010, [49.17].040, and [49.17].050 and 1999 c 374. 00-06-081, § 296-307-16370, filed 3/1/00, effective 3/1/00.]

WAC 296-307-16375 Cots, beds, bedding, and personal storage. The operator must provide cots, beds, or bunks for each occupant, not to exceed the maximum occupancy approved by the department or health officer.

(1) Beds or bunks must be furnished with clean mattresses and maintained in a clean and sanitary condition.

(2) The operator must:

(a) Provide sufficient clearance between each cot, bed, or bunk and the floor or a commercially available cot, bed, or bunk; and

(b) Allow space to separate beds laterally and end-to-end by at least thirty-six inches when single beds are used.

(3) When bunk beds are used the operator must:

(a) Allow space to separate beds laterally and end-to-end by at least forty-eight inches; and

(b) Maintain a minimum space of twenty-seven inches between the upper and lower bunks.

(4) Locate cots, beds, or bunks at least thirty inches or more from cooking surfaces.

(5) The use of triple bunk beds is prohibited.

(6) The operator must provide suitable storage facilities for clothing and personal articles in each tent.

[Statutory Authority: RCW 49.17.010, [49.17].040, and [49.17].050 and 1999 c 374. 00-06-081, § 296-307-16375, filed 3/1/00, effective 3/1/00.]

WAC 296-307-16380 First aid and safety. The operator must:

(1) Comply with chapters 15.58 and 17.21 RCW and chapters 16-228 and 296-307 WAC, Part I and J, and pesticide label instructions when using pesticides in and around the camp;

(2) Prohibit, in the housing area, the use, storage, and mixing of flammable, volatile, or toxic substances other than those intended for household use;

(3) Provide readily accessible first-aid equipment;

(4) Ensure that a first-aid qualified person is readily accessible to administer first aid at all times;

(5) Store or remove unused refrigerator units to prevent access by children.

[Statutory Authority: RCW 49.17.010, [49.17].040, and [49.17].050 and 1999 c 374. 00-06-081, § 296-307-16380, filed 3/1/00, effective 3/1/00.]

WAC 296-307-16385 Refuse disposal. The operator must:

(1) Comply with local sanitation codes for removing refuse from camp areas and disposing of refuse;

(2) Protect against rodent harborage, insect breeding, and other health hazards while storing, collecting, transporting, and disposing of refuse;

(3) Store refuse in fly-tight, rodent-tight, impervious, and cleanable or single-use containers;

(4) Keep refuse containers clean;

(5) Provide a container on a wooden, metal, or concrete stand within one hundred feet of each dwelling unit;

(6) Empty refuse containers at least twice each week, and when full.

[Statutory Authority: RCW 49.17.010, [49.17].040, and [49.17].050 and 1999 c 374. 00-06-081, § 296-307-16385, filed 3/1/00, effective 3/1/00.]

WAC 296-307-16390 Insect and rodent control. The operator must take effective measures to prevent and control insect and rodent infestation.

[Statutory Authority: RCW 49.17.010, [49.17].040, and [49.17].050 and 1999 c 374. 00-06-081, § 296-307-16390, filed 3/1/00, effective 3/1/00.]

WAC 296-307-16395 Disease prevention and control. The operator must:

(1) Report immediately to the local health officer the name and address of any individual in the camp known to have or suspected of having a communicable disease;

(2) Report immediately to the local health officer:

(a) Suspected food poisoning;

(b) An unusual prevalence of fever, diarrhea, sore throat, vomiting, or jaundice; or

(c) Productive cough, or when weight loss is a prominent symptom among occupants.

(3) Prohibit any individual with a communicable disease from preparing, cooking, serving, or handling food, foodstuffs, or materials in dining halls.

[Statutory Authority: RCW 49.17.010, [49.17].040, and [49.17].050 and 1999 c 374. 00-06-081, § 296-307-16395, filed 3/1/00, effective 3/1/00.]

INDOOR OPERATIONS

Part M
Guarding Tools and Equipment; Farm Shops; Materials Handling

WAC 296-307-18005 How must fan blades be guarded? You must guard the blades of a fan located less than seven feet above the floor or working level. The guard must have maximum openings of one-half inch.

[Statutory Authority: RCW 49.17.040. 98-24-096, § 296-307-18005, filed 12/1/98, effective 3/1/99.]

WAC 296-307-18010 How must constant-running drives be guarded? Shields, guards, and access doors that will prevent accidental contact with rotating machine parts on constant-running drives must be in place when the machine is running.

EXCEPTION: This requirement does not apply to combines when guards could create fire hazards.

"Constant-running drives" means drives that continue to rotate when the engine is running and all clutches are disengaged.

[Statutory Authority: RCW 49.17.040. 98-24-096, § 296-307-18010, filed 12/1/98, effective 3/1/99.]

WAC 296-307-18015 What training must an employer provide for employees who use agricultural equipment? At the time of initial assignment and at least annually thereafter, you must instruct every employee in the safe operation and servicing of all equipment that the employee will use, including at least the following:

(1) Keep all guards in place when the machine is in operation.

(2) Only persons required for instruction or machine operation may ride on equipment, unless a passenger seat or other protective device is provided.

(3) Stop engine, disconnect the power source, and wait for all machine movement to stop before servicing, adjusting, cleaning, or unclogging the equipment.

EXCEPTION: When the machine must be running to be properly serviced or maintained, you must instruct employees in the steps and procedures necessary to safely service or maintain the equipment.

(4) Make sure everyone is clear of machinery before starting the engine, engaging power, or operating the machine.

(5) Lock out electrical power before performing maintenance or service on farmstead equipment.

[Statutory Authority: RCW 49.17.040. 98-24-096, § 296-307-18015, filed 12/1/98, effective 3/1/99.]

WAC 296-307-18020 What requirements apply to machine controls? (1) If machine operation requires the presence of an operator on the machine, a "stop button" must be provided on the machine within reach of the operator.

(2) Power control devices must be marked to indicate the function and machine they control. "On" and "off" must be marked.

(3) "Stop" buttons must be red or orange. Each machine must have one or more stop buttons according to the working position of the operators.

(4) Power control devices must be located or guarded to prevent unexpected or accidental movement of the control. "Start" buttons must be recessed.

[Statutory Authority: RCW 49.17.040. 98-24-096, § 296-307-18020, filed 12/1/98, effective 3/1/99.]

WAC 296-307-18025 How must steam pipes be guarded? (1) All steam pipes or pipes hot enough to burn a person (other than coil pipes, radiators for heating rooms or buildings, or pipes on portable steam engines and boilers) must be guarded with a standard safeguard, unless guarded by location.

(2) All exposed hot pipes within seven feet of the floor or working platform, or within fifteen inches measured horizontally from stairways, ramps, or fixed ladders, must be covered with insulating material or be guarded to prevent contact.

[Statutory Authority: RCW 49.17.040. 98-24-096, § 296-307-18025, filed 12/1/98, effective 3/1/99.]

WAC 296-307-185 Guarding powered saws.

[97-09-013, recodified as § 296-307-185, filed 4/7/97, effective 4/7/97. Statutory Authority: RCW 49.17.040, [49.17.]050 and [49.17.]060. 96-22-048, § 296-306A-185, filed 10/31/96, effective 12/1/96.]

WAC 296-307-18503 What general requirements apply to powered saws? (1) You must ensure that all cracked saw blades are removed from service, except as indicated in WAC 296-307-18515(6).

(2) Inserting a wedge between a saw disk and its collar to form a "wobble saw" for rabbeting or dadoing is prohibited.

EXCEPTION: This does not apply to properly designed adjustable rabbeting blades.

(3) You must provide and ensure that employees use push sticks or push blocks in sizes and types suitable for the work to be done.

[Statutory Authority: RCW 49.17.040. 98-24-096, § 296-307-18503, filed 12/1/98, effective 3/1/99. 97-09-013, recodified as § 296-307-18503, filed 4/7/97, effective 4/7/97. Statutory Authority: RCW 49.17.040, [49.17.]050 and [49.17.]060. 96-22-048, § 296-306A-18503, filed 10/31/96, effective 12/1/96.]

WAC 296-307-18506 How must band saws be guarded? (1) You must ensure that all band wheels are completely encased or guarded on both sides. Guards must be constructed of at least No. 14 U.S. gauge metal, nominal two-inch wood material, or mesh or perforated metal of at least U.S. gauge No. 20 with maximum openings of three-eighths inch.

(2) You must ensure that all nonworking portions of the band saw blade are enclosed or guarded. The working side of the blade between the guide and the table may be left open to work on the stock.

(3) You must ensure that the guard for the portion of the blade between the sliding guide and the upper-saw-wheel guard protects the saw blade at the front and outer side.

[Statutory Authority: RCW 49.17.040. 98-24-096, § 296-307-18506, filed 12/1/98, effective 3/1/99. 97-09-013, recodified as § 296-307-18506, filed 4/7/97, effective 4/7/97. Statutory Authority: RCW 49.17.040, [49.17.]050 and [49.17.]060. 96-22-048, § 296-306A-18506, filed 10/31/96, effective 12/1/96.]

WAC 296-307-18509 How must radial arm saws be guarded? (1) You must ensure that the upper hood completely encloses the upper portion of the blade, including the end of the saw arbor. The upper hood must be constructed to protect the operator from flying material, and to deflect sawdust. The sides of the lower exposed portion of the blade must be guarded to the full diameter of the blade by a device that will automatically adjust itself to the thickness of the stock and remain in contact with stock. You may use an alternative lower blade guard if it provides equivalent protection.

(2) You must provide an adjustable stop to prevent the forward travel of the blade beyond the position necessary to complete the cut.

(3) You must equip a radial arm-saw with a mechanism to return the saw and keep it in position at the back of the table or behind the rip fence.

For example: You may use a counter-weight or a saw retractor device, or tilt the front of the radial arm saw unit up enough to maintain the blade at the back of the table or behind the rip fence when the pull handle is released by the operator.

(4) You must ensure that ripping and ploughing are permitted only against the direction in which the saw turns. Mark the direction of the saw rotation on the hood, and attach a permanent warning sign to the rear of the guard that prohibits ripping or ploughing from that position. (Where the blade teeth exit the upper hood when set up for ripping would be the rear of the saw in this case.) Each radial arm saw used for ripping must be provided with antikickback fingers or dogs to prevent the saw from throwing the material or stock back at the operator.

[Statutory Authority: RCW 49.17.040. 98-24-096, § 296-307-18509, filed 12/1/98, effective 3/1/99. 97-09-013, recodified as § 296-307-18509, filed 4/7/97, effective 4/7/97. Statutory Authority: RCW 49.17.040, [49.17.]050 and [49.17.]060. 96-22-048, § 296-306A-18509, filed 10/31/96, effective 12/1/96.]

WAC 296-307-18512 How must table saws be guarded? (1) You must ensure that each circular blade table saw used for ripping or crosscutting is guarded by a standard hood that covers the saw blade above the material completely at all times during the cut. The hood must adjust itself automatically to the thickness of, and must remain in contact with, the material being cut.

EXCEPTION: When finished surfaces of stock may be marred by the guard, it may be raised slightly to avoid contact. The hood must be designed to protect the operator from flying material.

(2) You must ensure that any table saw used for ripping has antikickback fingers or dogs and a spreader.

(3) While used for rabbeting, ploughing, grooving or dadoing a table saw may be used without an antikickback device and a spreader. Upon completion, the antikickback device and spreader must be replaced immediately.

(4) You must ensure that the part of the table saw that is beneath the table is fully guarded to prevent employee contact with the portion of the blade below the table.

(5) Power transmission components of table saws must be guarded according to WAC 296-307-280.

[Statutory Authority: RCW 49.17.040. 98-24-096, § 296-307-18512, filed 12/1/98, effective 3/1/99. 97-09-013, recodified as § 296-307-18512, filed 4/7/97, effective 4/7/97. Statutory Authority: RCW 49.17.040, [49.17.]050 and [49.17.]060. 96-22-048, § 296-306A-18512, filed 10/31/96, effective 12/1/96.]

WAC 296-307-18515 How must circular fuel-wood saws be guarded? (1) You must ensure that fuel-wood saws are guarded by a standard guard that completely encloses the blade to the depth of the teeth, except for the area where material is fed into the blade.

(2) You must ensure that the tables of fuel-wood saws is constructed so that material being sawed is supported on both sides of the blade.

(3) You must provide a mechanism that will prevent the leading edge of the saw from passing the front edge of the table or roll case.

(4) You must provide tilting tables of fuel-wood saws with a backrest for the full length of the table. The backrest must extend upward from the table platform at least to the height of the saw opening. An opening in a backrest must be a maximum of two inches. The backrest frame and filler must be constructed of material strong and rigid enough to prevent distortion under normal use.

(5) Power transmission components of fuel-wood saws must be guarded according to WAC 296-307-280.

(6) When a circular fuel-wood saw blade develops a crack, you must discontinue its use until properly repaired, according to the following measurements.

Length of crack	Diameter of saw in inches
1/2"	12"
1"	24"
1-1/2"	36"

[Statutory Authority: RCW 49.17.040. 98-24-096, § 296-307-18515, filed 12/1/98, effective 3/1/99. 97-09-013, recodified as § 296-307-18515, filed 4/7/97, effective 4/7/97. Statutory Authority: RCW 49.17.040, [49.17.]050 and [49.17.]060. 96-22-048, § 296-306A-18515, filed 10/31/96, effective 12/1/96.]

WAC 296-307-190 Guarding bench grinders, abrasive wheels, and portable grinders.

[Statutory Authority: RCW 49.17.040. 98-24-096, § 296-307-190, filed 12/1/98, effective 3/1/99. 97-09-013, recodified as § 296-307-190, filed 4/7/97, effective 4/7/97. Statutory Authority: RCW 49.17.040, [49.17.]050 and [49.17.]060. 96-22-048, § 296-306A-190, filed 10/31/96, effective 12/1/96.]

WAC 296-307-19003 What definitions apply to this section? "Abrasive wheel" means a cutting tool consisting of abrasive grains held together by organic or inorganic bonds. This includes diamond and reinforced wheels.

"Flanges" means collars, discs, or plates between which wheels are mounted. Also referred to as adapter, sleeve, or back.

"Mounted wheels" means wheels of various dimensions that are usually 2 inches in diameter or smaller. They can be either organic or inorganic bonded abrasive wheels. They are secured to plain or threaded steel mandrels.

"Off-hand grinding" means grinding material or a part that is held in the operator's hand.

"Portable grinding" means the grinding machine is hand-held and may be easily moved from one location to another.

"Reinforced wheels" means a class of organic wheels that contain strengthening fabric or filament. "Reinforced" does not mean wheels using such mechanical additions as steel rings, steel cup backs, or wire or tape winding.

"Safety guard" means an enclosure designed to restrain the pieces of the grinding wheel and protect the operator in the event that the wheel is broken in operation.

[97-09-013, recodified as § 296-307-19003, filed 4/7/97, effective 4/7/97. Statutory Authority: RCW 49.17.040, [49.17.]050 and [49.17.]060. 96-22-048, § 296-306A-19003, filed 10/31/96, effective 12/1/96.]

WAC 296-307-19006 What rules apply to guarding abrasive wheels? (1) Abrasive wheels must be used only on machines provided with safety guards.

EXCEPTION: This requirement does not apply to the following:

(a) Wheels used for internal work while the wheel is within the work being ground.

(b) Mounted wheels 2 inches and smaller in diameter, used in portable operations.

(c) Types 16, 17, 18, 18R, and 19 cones, plugs, and threaded hole pot balls where the work offers protection.

(d) Specially shaped "sickle grinding" wheels mounted in mandrel-type bench or floor stands.

(2) The safety guard must cover the spindle end, nut, and flange projections.

EXCEPTIONS:

(a) When the work provides protection to the operator, the spindle end, nut, and outer flange may be exposed. When the work entirely covers the side of the wheel, the side covers of the guard may be omitted.

(b) The spindle end, nut, and outer flange may be exposed on portable machines designed for, and used with, type 6, 11, 27, and 28 abrasive wheels, cutting off wheels, and tuck pointing wheels.

(c) The spindle end, nut, and outer flange may be exposed on machines designed as portable saws.

(3) The guard must cover the sides and periphery of the wheel.

EXCEPTIONS: (a) Bench and floor stands;
(i) The maximum permissible angle of exposure is 90°. This exposure must begin at a point not more than 65° above the horizontal plane of the wheel spindle.
(ii) Wherever the nature of the work requires contact with the wheel below the horizontal plane of the spindle, the exposure must not exceed 125°. This exposure must begin at a point not more than 65° above the horizontal plane of the wheel spindle.
(b) Swing-frame grinders may only be exposed on the bottom half; the top half of the wheel must be enclosed at all times.
(c) Where the work is applied to the top of the wheel, the exposure of the grinding wheel periphery must not exceed 60°.
(d) When the work entirely covers the side of the wheel, the side covers of the guard may be omitted.

(4) The safety guard must be mounted to maintain proper alignment with the wheel, and the strength of the fastenings must exceed the strength of the guard.

(5) Take care to see that the safety guard is properly positioned before starting the mounted wheel.

(6) Abrasive wheel machinery guards must meet the design specifications of ANSI B7.1-1970.

(7) Exception: WAC 296-307-19006 does not apply to natural sandstone wheels and metal, wooden, cloth, or paper discs, with a layer of abrasive on the surface.

[Statutory Authority: RCW 49.17.040. 98-24-096, § 296-307-19006, filed 12/1/98, effective 3/1/99. 97-09-013, recodified as § 296-307-19006, filed 4/7/97, effective 4/7/97. Statutory Authority: RCW 49.17.040, [49.17.]050 and [49.17.]060. 96-22-048, § 296-306A-19006, filed 10/31/96, effective 12/1/96.]

WAC 296-307-19009 What are the use, mounting, and guarding rules for abrasive wheels? (1) Immediately before mounting, the operator must closely inspect and sound (ring test) all wheels to make sure they are not damaged. Before mounting the wheel, the operator must check the spindle speed of the machine to be certain that it does not exceed the maximum operating speed marked on the wheel.

"Ring test" means to tap the wheel gently with a light nonmetallic implement, such as the handle of a screwdriver for light wheels, or a wooden mallet for heavier wheels.

(2) Grinding wheels must fit freely on the spindle and remain free under all grinding conditions. The wheel hole must be made suitably oversized to ensure that heat and pressure do not create a hazard.

(3) All contact surfaces of wheels, blotters, and flanges must be flat and free of foreign matter.

(4) Bushings used in the wheel hole must not exceed the width of the wheel and must not contact the flanges.

(5) On offhand grinding machines, work rests must be used to support the work. The work rest must be rigid and adjustable to compensate for wheel wear. Work rests must be kept adjusted closely to the wheel with a maximum opening of one-eighth inch to prevent the work from jamming between the wheel and the rest. The work rest must be securely clamped after each adjustment and shall not be adjusted with the wheel in motion.

(6) Goggles or face shields must be used when grinding.

(7) Nonportable grinding machines must be securely mounted on substantial floors, benches, foundations, or other adequate structures.

(8) After mounting, abrasive wheels must be run at operating speed with the safety guard in place and properly adjusted, or in a protected enclosure for at least one minute before applying work. During this time, no one may stand in front of or in line with the wheel.

(9) Grinders or abrasive wheels that vibrate or are out of balance must be repaired before use.

(10) Abrasive wheels not designed for the machine or guard must not be mounted on a grinder.

(11) Side grinding must only be performed with wheels designed for this purpose.

Note: Light grinding on the side of straight wheels is permitted only when very delicate pressure is applied.

(12) Where the operator may stand in front of the opening, safety guards must be adjustable to compensate for wheel wear. The distance between the wheel periphery and the adjustable tongue or the guard above the wheel must not exceed one-quarter inch.

[Statutory Authority: RCW 49.17.040. 98-24-096, § 296-307-19009, filed 12/1/98, effective 3/1/99. 97-09-013, recodified as § 296-307-19009, filed 4/7/97, effective 4/7/97. Statutory Authority: RCW 49.17.040, [49.17.]050 and [49.17.]060. 96-22-048, § 296-306A-19009, filed 10/31/96, effective 12/1/96.]

WAC 296-307-19012 What requirements apply to flanges? (1) Grinding machines must have flanges.

(2) All abrasive wheels must be mounted between flanges that are at least one-third the diameter of the wheel. Regardless of flange type used, the wheel must always be guarded. Blotters must be used according to this section.

(3) Design and material requirements include:

(a) Flanges must be designed to transmit the driving torque from the spindle to the grinding wheel.

(b) Flanges must be made of steel, cast iron, or other material of equal or greater strength and rigidity.

(4) An abrasive wheel that is designed to be held by flanges must not be operated without them. Except for those types requiring flanges of a special design, flanges must be at least one-third the diameter of the wheel.

(5) Facings of compressible material (blotters) must be inserted between the abrasive wheel and flanges to ensure uniform distribution of flange pressure.

(6) All flanges must be maintained in good condition. When the bearing surfaces become damaged, they should be trued or refaced. When refacing or truing, exercise care to make sure that proper relief and rigidity is maintained before starting the wheel.

[Statutory Authority: RCW 49.17.040. 98-24-096, § 296-307-19012, filed 12/1/98, effective 3/1/99. 97-09-013, recodified as § 296-307-19012, filed 4/7/97, effective 4/7/97. Statutory Authority: RCW 49.17.040, [49.17.]050 and [49.17.]060. 96-22-048, § 296-306A-19012, filed 10/31/96, effective 12/1/96.]

WAC 296-307-19015 How must vertical portable grinders be guarded? Safety guards on right angle head or vertical portable grinders must have a maximum exposure angle of 180°, and the guard must be between the operator and the wheel during use. The guard must be adjusted so that pieces of an accidentally broken wheel will be deflected away from the operator.

[97-09-013, recodified as § 296-307-19015, filed 4/7/97, effective 4/7/97. Statutory Authority: RCW 49.17.040, [49.17.]050 and [49.17.]060. 96-22-048, § 296-306A-19015, filed 10/31/96, effective 12/1/96.]

WAC 296-307-19018 How must other portable grinders be guarded? Other portable grinding machines must be guarded so that only the bottom half of the wheel is exposed. The top half of the wheel must be enclosed at all times.

[97-09-013, recodified as § 296-307-19018, filed 4/7/97, effective 4/7/97. Statutory Authority: RCW 49.17.040, [49.17.]050 and [49.17.]060. 96-22-048, § 296-306A-19018, filed 10/31/96, effective 12/1/96.]

WAC 296-307-195 What rules apply to grounding and "dead man" controls for hand-held portable power tools? (1) Each hand-held, power-driven tool must have a "dead man" control, such as a spring-actuated switch, valve, or equivalent device, so that the power will be automatically shut off whenever the operator releases the control.

(2) The frames and all exposed, noncurrent-carrying metal parts of portable electric machinery, operated at more than fifty volts to ground, must be grounded. Other hand-held portable motors driving electric tools must be grounded if they operate at more than fifty volts to ground. The ground must use a separate ground wire and polarized plug and receptacle.

Exception: Double insulated tools that are designed and used according to the requirements of Article 250-45 of the National Electrical Code (1971 edition) are exempt from the grounding requirements.

[97-09-013, recodified as § 296-307-195, filed 4/7/97, effective 4/7/97. Statutory Authority: RCW 49.17.040, [49.17.]050 and [49.17.]060. 96-22-048, § 296-306A-195, filed 10/31/96, effective 12/1/96.]

WAC 296-307-200 Compressed air.

[97-09-013, recodified as § 296-307-200, filed 4/7/97, effective 4/7/97. Statutory Authority: RCW 49.17.040, [49.17.]050 and [49.17.]060. 96-22-048, § 296-306A-200, filed 10/31/96, effective 12/1/96.]

WAC 296-307-20005 May compressed air be used for cleaning? Using compressed air for cleaning purposes is prohibited, except where the pressure is reduced to less than 30 psi and then only with effective chip guarding and personal protective equipment.

[97-09-013, recodified as § 296-307-20005, filed 4/7/97, effective 4/7/97. Statutory Authority: RCW 49.17.040, [49.17.]050 and [49.17.]060. 96-22-048, § 296-306A-20005, filed 10/31/96, effective 12/1/96.]

WAC 296-307-20010 What requirements apply to compressed air tools? (1) When using compressed air tools, use care to prevent the tool from being shot from the gun.

(2) When momentarily out of use, the gun should be laid so that the tool cannot fly out if the pressure is accidentally released. When not in use, all tools should be removed from the gun.

(3) When disconnecting a compressed air tool from the air line, first shut off the pressure and then operate the tool to release the pressure remaining in the hose.

(4) Compressed air hose or guns must not be pointed at or brought into contact with the body of any person.

[97-09-013, recodified as § 296-307-20010, filed 4/7/97, effective 4/7/97. Statutory Authority: RCW 49.17.040, [49.17.]050 and [49.17.]060. 96-22-048, § 296-306A-20010, filed 10/31/96, effective 12/1/96.]

WAC 296-307-205 Guarding portable powered tools.

[97-09-013, recodified as § 296-307-205, filed 4/7/97, effective 4/7/97. Statutory Authority: RCW 49.17.040, [49.17.]050 and [49.17.]060. 96-22-048, § 296-306A-205, filed 10/31/96, effective 12/1/96.]

WAC 296-307-20505 What requirements apply to guarding portable powered tools? (1) All portable, power-driven circular saws with a blade diameter greater than 2 inches must have guards above and below the base plate or shoe.

(a) The upper guard must cover the saw to the depth of the teeth, except for the minimum arc required to permit the base to be tilted for bevel cuts.

(b) The lower guard must cover the saw to the depth of the teeth, except for the minimum arc required to allow proper retraction and contact with the work.

(c) When the tool is withdrawn from the work, the lower guard must automatically and instantly return to covering position.

(2) Portable belt sanding machines must have guards at each nip point where the sanding belt runs onto a pulley. These guards must prevent the hands or fingers of the operator from coming in contact with the nip points. The unused run of the sanding belt must be guarded against accidental contact.

(3) Portable electric powered tools must meet the electrical requirements of chapter 296-307 WAC Part T.

[Statutory Authority: RCW 49.17.040. 98-24-096, § 296-307-20505, filed 12/1/98, effective 3/1/99. 97-09-013, recodified as § 296-307-20505, filed 4/7/97, effective 4/7/97. Statutory Authority: RCW 49.17.040, [49.17.]050 and [49.17.]060. 96-22-048, § 296-306A-20505, filed 10/31/96, effective 12/1/96.]

WAC 296-307-20510 What requirements apply to switches and controls on portable powered tools? (1) The following powered tools must have a constant pressure switch or control that will shut off the power when the pressure is released:

- All hand-held powered circular saws with a blade diameter-greater than 2 inches;
- Electric, hydraulic or pneumatic chain saws; and
- Percussion tools without positive accessory holding means.

All hand-held gasoline powered chain saws must have a constant pressure throttle control that will shut off the power to the saw chain when the pressure is released.

(2) The following powered tools must have a constant pressure switch or control:

- All hand-held powered drills, tappers, fastener drivers, and horizontal, vertical, and angle grinders with wheels greater than 2 inches in diameter;
- Disc sanders with discs greater than 2 inches in diameter;
- Belt sanders;
- Reciprocating saws;
- Saber, scroll, and jig saws with blade shanks greater than a nominal 1/4 inch; and
- Other similarly operating powered tools.

These tools may have a lock-on control if they can be turned off by a single motion of the same finger or fingers that turn it on.

(3) The following powered tools must have either a positive on-off control, or other controls as described above:

• All other hand-held powered tools, including:
• Platen sanders;
• Grinders with wheels 2 inches in diameter or less;
• Disc sanders with discs 2 inches in diameter or less;
• Routers;
• Planers;
• Laminate trimmers;
• Nibblers;
• Shears; and
• Saber, scroll, and jig saws with blade shanks a nominal 1/4 inch wide or less.

(a) Saber, scroll, and jig saws with nonstandard blade holders may use blades with shanks that are nonuniform in width, if the narrowest portion of the blade shank is an integral part in mounting the blade.

(b) Blade shank width must be measured at the narrowest portion of the blade shank when saber, scroll, and jig saws have nonstandard blade holders.

(c) "Nominal" in this section means +0.05 inch.

(4) The operating control on hand-held power tools must be located to minimize the possibility of accidental operation that would constitute a hazard to employees.

Exception: This section does not apply to concrete vibrators, concrete breakers, powered tampers, jack hammers, rock drills, garden appliances, household and kitchen appliances, personal care appliances, or to fixed machinery.

[97-09-013, recodified as § 296-307-20510, filed 4/7/97, effective 4/7/97. Statutory Authority: RCW 49.17.040, [49.17.]050 and [49.17.]060. 96-22-048, § 296-306A-20510, filed 10/31/96, effective 12/1/96.]

WAC 296-307-20515 What requirements apply to pneumatic powered tools and hose? (1) The operating trigger on portable pneumatic powered tools must be located to minimize the possibility of accidental operation and arranged to close the air inlet valve automatically when the operator removes pressure.

(2) A tool retainer must be installed on each tool that would otherwise be ejected from the hose.

(3) Hose and hose connections used for conducting compressed air to utilization equipment must be designed for the pressure and service to which they are subjected.

[97-09-013, recodified as § 296-307-20515, filed 4/7/97, effective 4/7/97. Statutory Authority: RCW 49.17.040, [49.17.]050 and [49.17.]060. 96-22-048, § 296-306A-20515, filed 10/31/96, effective 12/1/96.]

WAC 296-307-220 Power lawnmowers.

[97-09-013, recodified as § 296-307-220, filed 4/7/97, effective 4/7/97. Statutory Authority: RCW 49.17.040, [49.17.]050 and [49.17.]060. 96-22-048, § 296-306A-220, filed 10/31/96, effective 12/1/96.]

WAC 296-307-22003 What definitions apply to this section? "Blade tip circle" means the path described by the outermost point of the blade as it rotates about its shaft axis.

"Catcher assembly" means a part that provides a means for collecting grass clippings or debris.

"Deadman control" means a control designed to automatically interrupt power to a drive when the operator releases the control.

"Guard" means a part for shielding a hazardous area of a machine.

"Lowest blade position" means the lowest blade position when the mower is not in use.

"Operator area" (walk-behind mowers) means a circular area behind the mower that is no smaller than 30 inches in diameter, the center of which is 30 inches behind the nearest blade tip circle.

"Power reel mower" means a lawn-cutting machine with a power source that rotates one or more helically formed blades about a horizontal axis and creates a shearing action with a stationary cutter bar or bed knife.

"Power rotary mower" means a lawn-cutting machine with a power source that rotates one or more cutting blades about a vertical axis.

"Riding mower" means a powered, self-propelled lawn-cutting vehicle on which the operator rides and controls the machine.

"Sulky type mower" means a walk-behind mower that has been converted to a riding mower by the addition of a sulky.

"Walk-behind mower" means a mower either pushed or self-propelled and normally guided by the operator walking behind the unit.

[97-09-013, recodified as § 296-307-22003, filed 4/7/97, effective 4/7/97. Statutory Authority: RCW 49.17.040, [49.17.]050 and [49.17.]060. 96-22-048, § 296-306A-22003, filed 10/31/96, effective 12/1/96.]

WAC 296-307-22006 What are the general guarding requirements for power lawnmowers? (1) Walk-behind, riding-rotary, and reel power lawnmowers designed for use by employees must meet the design specifications in ANSI B71.1-1968.

Exception: These specifications do not apply to sulky-type mowers, flail mowers, sickle-bar mowers, or mowers designed for commercial use.

(2) All power-driven chains, belts, and gears must be positioned or guarded to prevent accidental contact with the operator during normal starting, mounting, and operation of the machine.

(3) The motor must have a shutoff device that requires manual and intentional reactivation to restart the motor.

(4) All positions of the operating controls must be clearly identified.

(5) The words, "Caution — Be sure the operating control(s) is in neutral before starting the engine," or similar wording must be clearly visible at an engine starting control point on self-propelled mowers.

(6) All power lawn mowers must be used according to the manufacturer's instructions.

[97-09-013, recodified as § 296-307-22006, filed 4/7/97, effective 4/7/97. Statutory Authority: RCW 49.17.040, [49.17.]050 and [49.17.]060. 96-22-048, § 296-306A-22006, filed 10/31/96, effective 12/1/96.]

WAC 296-307-22009 What rules apply to walk-behind and riding rotary mowers? (1) The mower blade must be enclosed except on the bottom and the enclosure must extend to or below the lowest blade position.

(2) Guards that must be removed to install a catcher assembly must meet the following requirements:

(a) Warning instructions are attached to the mower near the opening stating that the mower must not be used without either the catcher assembly or the guard in place.

(b) The mower is used only with either the catcher assembly or the guard in place.

(c) The catcher assembly is properly and completely installed.

(3) The word "caution" or stronger wording must be placed on the mower at or near each discharge opening.

(4) Blade(s) must stop rotating from the manufacturer's specified maximum speed within 15 seconds after declutching, or shutting off power.

[97-09-013, recodified as § 296-307-22009, filed 4/7/97, effective 4/7/97. Statutory Authority: RCW 49.17.040, [49.17.]050 and [49.17.]060. 96-22-048, § 296-306A-22009, filed 10/31/96, effective 12/1/96.]

WAC 296-307-22012 What rules apply to walk-behind rotary mowers? (1) The horizontal angle of the grass discharge opening(s) in the blade enclosure must not contact the operator area.

(2) There must be one of the following at all grass discharge openings:

(a) A minimum of 3 inches between the end of the discharge chute and the blade tip circle; or

(b) A rigid bar fastened across the discharge opening, secured to prevent removal without the use of tools. The bottom of the bar must be no higher than the bottom edge of the blade enclosure.

(3) The highest point(s) on the blade enclosure front, except discharge-openings, must be a maximum of 1-1/4 inches above the lowest blade position. Mowers with a swingover handle are considered to have no front in the blade enclosure and therefore must comply with WAC 296-307-22009(1).

(4) The mower handle must be fastened to the mower to prevent loss of control by unintentional uncoupling while in operation.

(5) Mower handles must be locked in the normal operating position(s) so that they cannot be accidentally disengaged during normal mower operation.

(6) A swingover handle must meet the requirements of this section.

(7) Wheel drive disengaging controls, except deadman controls, must move opposite to the direction of the vehicle motion in order to disengage the drive. Deadman controls may operate in any direction to disengage the drive.

(8) You must ensure that each walk-behind rotary mower has a positive constant-pressure device that requires the operator to hold the device in the "on" position to operate the mower. Using rope or string or other material to tie the constant pressure device in the "on" position is prohibited.

[Statutory Authority: RCW 49.17.040. 98-24-096, § 296-307-22012, filed 12/1/98, effective 3/1/99. 97-09-013, recodified as § 296-307-22012, filed 4/7/97, effective 4/7/97. Statutory Authority: RCW 49.17.040, [49.17.]050 and [49.17.]060. 96-22-048, § 296-306A-22012, filed 10/31/96, effective 12/1/96.]

WAC 296-307-22015 What rules apply to riding rotary mowers? (1) The highest point(s) of all openings in the blade enclosure front must be a maximum of 1 1/4 inches above the lowest blade position.

(2) Opening(s) must not allow grass or debris to discharge directly toward the operator seated in normal operator position.

(3) There must be one of the following at all grass discharge openings:

(a) A minimum of 6 inches between the end of the discharge chute and the blade tip circle; or

(b) A rigid bar fastened across the discharge opening secured to prevent removal without the use of tools. The bottom of the bar must be no higher than the bottom edge of the blade enclosure.

(4) Mowers must have stops to prevent jackknifing or locking of the steering mechanism.

(5) The mower must have brakes.

(6) Hand-operated wheel drive disengaging controls must move opposite to the direction of vehicle motion in order to disengage the drive. Foot-operated wheel drive disengaging controls must be depressed to disengage the drive. Deadman controls, both hand and foot operated, may operate in any direction to disengage the drive.

[97-09-013, recodified as § 296-307-22015, filed 4/7/97, effective 4/7/97. Statutory Authority: RCW 49.17.040, [49.17.]050 and [49.17.]060. 96-22-048, § 296-306A-22015, filed 10/31/96, effective 12/1/96.]

WAC 296-307-225 Jacks.

[97-09-013, recodified as § 296-307-225, filed 4/7/97, effective 4/7/97. Statutory Authority: RCW 49.17.040, [49.17.]050 and [49.17.]060. 96-22-048, § 296-306A-225, filed 10/31/96, effective 12/1/96.]

WAC 296-307-22503 What definitions apply to this section? "Jack" means an appliance for lifting and lowering or moving horizontally a load using a pushing force.

Note: Jack types include lever and ratchet, screw, and hydraulic.

"Rating" means the maximum working load for which a jack is designed to lift the load safely throughout its travel.

[97-09-013, recodified as § 296-307-22503, filed 4/7/97, effective 4/7/97. Statutory Authority: RCW 49.17.040, [49.17.]050 and [49.17.]060. 96-22-048, § 296-306A-22503, filed 10/31/96, effective 12/1/96.]

WAC 296-307-22506 How shall the rated load be marked on a jack? (1) The operator must make sure that the jack used has a load rating sufficient to lift and sustain the load.

(2) The rated load must be legibly and permanently marked in a prominent location on the jack by casting, stamping, or other suitable means.

Note: You should follow the manufacturer's specifications to raise the rated load of a jack.

[97-09-013, recodified as § 296-307-22506, filed 4/7/97, effective 4/7/97. Statutory Authority: RCW 49.17.040, [49.17.]050 and [49.17.]060. 96-22-048, § 296-306A-22506, filed 10/31/96, effective 12/1/96.]

WAC 296-307-22509 What rules apply to the operation and maintenance of jacks? (1) If the foundation is not firm, you must block the base of the jack. If the cap might slip, you must place a block in between the cap and the load.

(2) The operator must watch the stop indicator, which must be kept clean, in order to determine the limit of travel. The indicated limit must not be overrun.

(3) After the load has been raised, it must immediately be cribbed, blocked, or otherwise secured. Working under a load raised only with jacks is prohibited.

(4) Hydraulic jacks exposed to freezing temperatures must be supplied with an adequate antifreeze liquid.

(5) All jacks must be properly lubricated at regular intervals. The lubricating instructions of the manufacturer should be followed, and only lubricants recommended by the manufacturer should be used.

(6) You must ensure that each jack is thoroughly inspected according to the service conditions and at least:

(a) For constant or intermittent use at one locality, once every 6 months;

(b) For jacks sent out of shop for special work, when sent out and when returned;

(c) For a jack subjected to abnormal load or shock, immediately before and immediately thereafter.

(7) Repair or replacement parts must be examined for possible defects.

(8) Jacks that are out of order must be tagged, and not be used until repaired.

[Statutory Authority: RCW 49.17.040. 98-24-096, § 296-307-22509, filed 12/1/98, effective 3/1/99. 97-09-013, recodified as § 296-307-22509, filed 4/7/97, effective 4/7/97. Statutory Authority: RCW 49.17.040, [49.17.]050 and [49.17.]060. 96-22-048, § 296-306A-22509, filed 10/31/96, effective 12/1/96.]

WAC 296-307-230 What are the general requirements for materials handling and storage? (1) Safe clearances of three feet must be allowed for aisles, loading docks, doorways, and wherever turns or passage must be made. Passageways must be kept clear and in good repair, with no obstructions.

(2) Bags, bales, boxes, and other containers stored in tiers must be made secure against sliding or collapse.

(3) Storage areas must be kept free from any accumulation of materials that could cause tripping, fire, or explosion.

(4) Employees must be instructed in proper lifting or moving techniques and methods. Mechanical devices or assistance in lifting must be used when moving heavy objects.

(5) When removing material stored in piles, employees must remove material in a manner that maintains the stability of the pile and prevents collapse.

(6) Storage areas must have proper drainage.

(7) You must provide clearance signs to warn of clearance limits.

(8) For powered industrial truck (forklift) requirements, see WAC 296-307-520.

[Statutory Authority: RCW 49.17.040. 98-24-096, § 296-307-230, filed 12/1/98, effective 3/1/99. 97-09-013, recodified as § 296-307-230, filed 4/7/97, effective 4/7/97. Statutory Authority: RCW 49.17.040, [49.17.]050 and [49.17.]060. 96-22-048, § 296-306A-230, filed 10/31/96, effective 12/1/96.]

WAC 296-307-232 What requirements apply to conveyors? Conveyors must be constructed, operated, and maintained according to ANSI B 20.1-1957.

(1) When the return strand of a conveyor operates within seven feet of the floor, there must also be a trough strong enough to carry the weight resulting from a broken chain.

(2) If the strands are over a passageway, a means must be provided to catch and support the ends of the chain in the event of a break.

(3) When the working strand of a conveyor crosses within three feet of the floor level in passageways, a bridge must be provided for employees to cross over the conveyor.

(4) Whenever conveyors pass adjacent to or over working areas or passageways, protective guards must be installed. These guards must be designed to catch and hold any load or materials that may fall off or dislodge and injure an employee.

(5) Employees must be prohibited from walking on the rolls of roller-type conveyors. If employees must walk on roller-type conveyors because of an emergency, the conveyor must be shut off first.

(6) Guards, screens, or barricades that are strong enough to prevent material from falling must be installed on all sides of the shaftway of elevator-type conveyors except at openings where material is loaded or unloaded. Automatic shaftway gates or suitable barriers must be installed at each floor level where material is loaded or unloaded from the platform.

(7) Conveyors must have an emergency stopping device that can be reached from the conveyor. The device must be located near the material entrance to each chopper, mulcher, saw, or similar equipment. The device must be located so that it can stop the conveyor before an employee enters the point of operation of the machine fed by the conveyor.

EXCEPTION: The emergency stopping device is not required where the conveyor leading into the equipment is under constant control of an operator with full view of the material entrance and the conveyor is located where the operator cannot fall onto it.

(8) Where conveyors are over seven feet high, means must be provided to safely permit essential inspection and maintenance operations.

(9) Any part showing signs of significant wear must be inspected carefully and replaced before it creates a hazard.

(10) Replacement parts must be equal to or exceed the manufacturer's specifications.

[Statutory Authority: RCW 49.17.040. 98-24-096, § 296-307-232, filed 12/1/98, effective 3/1/99. 97-09-013, recodified as § 296-307-232, filed 4/7/97, effective 4/7/97. Statutory Authority: RCW 49.17.040, [49.17.]050 and [49.17.]060. 96-22-048, § 296-306A-232, filed 10/31/96, effective 12/1/96.]

Part N
Sanitation for Indoor Workplaces

WAC 296-307-240 Sanitation for fixed, indoor workplaces.

[97-09-013, recodified as § 296-307-240, filed 4/7/97, effective 4/7/97. Statutory Authority: RCW 49.17.040, [49.17.]050 and [49.17.]060. 96-22-048, § 296-306A-240, filed 10/31/96, effective 12/1/96.]

WAC 296-307-24001 Must an employer comply with state health regulations? You must comply with the rules and regulations of the state board of health governing sanitation in the workplace. We enforce these regulations according to RCW 43.20.050.

[97-09-013, recodified as § 296-307-24001, filed 4/7/97, effective 4/7/97. Statutory Authority: RCW 49.17.040, [49.17.]050 and [49.17.]060. 96-22-048, § 296-306A-24001, filed 10/31/96, effective 12/1/96.]

WAC 296-307-24003 What does this section cover? WAC 296-307-240 covers sanitation for employees who nor-

mally work in fixed, indoor places of agricultural employment.

A "fixed, indoor workplace" is one where the employees perform a majority of their duties at that site.

This does not cover field employees who only occasionally enter a shop or other farm building as part of their normal duties. Field employees are covered by the field sanitation requirements of WAC 296-307-095.

This section does not cover measures for the control of toxic materials.

[Statutory Authority: RCW 49.17.040. 98-24-096, § 296-307-24003, filed 12/1/98, effective 3/1/99. 97-09-013, recodified as § 296-307-24003, filed 4/7/97, effective 4/7/97. Statutory Authority: RCW 49.17.040, [49.17.]050 and [49.17.]060. 96-22-048, § 296-306A-24003, filed 10/31/96, effective 12/1/96.]

WAC 296-307-24006 What definitions apply to this section? "Lavatory" means a basin used exclusively for washing hands, arms, face, and head.

"Personal service room" means a room used for activities not directly connected with the business function of the employer. Such activities include but are not limited to, first aid, medical services, dressing, showering, toilet use, washing, and eating.

"Potable water" means water that meets state or local quality standards for drinking water, or water that meets the quality standards of the Environmental Protection Agency's "National Interim Primary Drinking Water Regulations," published in 40 CFR, Part 141, and 40 CFR 147.2400.

"Toilet facility" means a fixture maintained within a toilet room for the purpose of defecation or urination, or both.

"Toilet room" means a room maintained within or on the premises of any place of employment, containing toilet facilities for employee use.

"Toxic material" means a material that exceeds a regulatory limit (such as in chapter 296-62 WAC), or toxicity that causes or is likely to cause death or serious physical harm.

"Urinal" means a toilet facility maintained within a toilet room for the sole purpose of urination.

"Water closet" means a toilet facility maintained within a toilet room for the purpose of both defecation and urination and which is flushed with water.

"Wet process" means any process or operation in a workroom that normally results in walking or standing surfaces becoming wet.

[97-09-013, recodified as § 296-307-24006, filed 4/7/97, effective 4/7/97. Statutory Authority: RCW 49.17.040, [49.17.]050 and [49.17.]060. 96-22-048, § 296-306A-24006, filed 10/31/96, effective 12/1/96.]

WAC 296-307-24009 What housekeeping requirements apply to fixed, indoor workplaces? (1) You must ensure that all places of employment are kept clean to the extent that the work allows.

(2) You must ensure that the floor of every workroom is kept as dry as possible. Where wet processes are used, you must maintain drainage. You must provide false floors, platforms, mats, or other dry standing places where practical, or provide appropriate waterproof footgear.

(3) To facilitate cleaning, every floor, working place, and passageway must be kept free from protruding nails, splinters, loose boards and unnecessary holes and openings.

(4) Cleaning and sweeping must be done to minimize dust in the air and when practical, done outside of working hours.

[97-09-013, recodified as § 296-307-24009, filed 4/7/97, effective 4/7/97. Statutory Authority: RCW 49.17.040, [49.17.]050 and [49.17.]060. 96-22-048, § 296-306A-24009, filed 10/31/96, effective 12/1/96.]

WAC 296-307-24012 How must the potable water supply be maintained? (1) You must provide potable water in all places of employment, for drinking, washing of the person, cooking, washing food, washing cooking or eating utensils, washing food preparation or processing premises, and for personal service rooms.

(2) Potable drinking water dispensers must be maintained in sanitary condition, be closeable, and have a tap.

(3) Open containers for drinking water from which the water must be dipped or poured, even if fitted with a cover, are prohibited.

(4) A common drinking cup and other common utensils are prohibited.

[97-09-013, recodified as § 296-307-24012, filed 4/7/97, effective 4/7/97. Statutory Authority: RCW 49.17.040, [49.17.]050 and [49.17.]060. 96-22-048, § 296-306A-24012, filed 10/31/96, effective 12/1/96.]

WAC 296-307-24015 How must the nonpotable water supply be maintained? (1) You must ensure that nonpotable water is marked as unsafe and is not used for drinking, washing of the person, cooking, washing food, washing cooking or eating utensils, washing food preparation or processing premises, or personal service rooms, or for washing clothes.

(2) Nonpotable water used for cleaning any other work premises must be free of concentrations of chemicals, fecal coliform, or other substances that could create unsanitary conditions or be harmful to employees.

(3) Nonpotable water systems or systems carrying any other nonpotable substance must be constructed to prevent backflow or backsiphonage into a potable water system.

[97-09-013, recodified as § 296-307-24015, filed 4/7/97, effective 4/7/97. Statutory Authority: RCW 49.17.040, [49.17.]050 and [49.17.]060. 96-22-048, § 296-306A-24015, filed 10/31/96, effective 12/1/96.]

WAC 296-307-24018 What toilet facilities must an employer provide? (1) You must provide toilet facilities, with separate toilet rooms for each sex, according to the requirements in the table below. You must provide facilities for each sex based on the number of employees of that sex for whom facilities are furnished.

(2) Where single-occupancy rooms have more than one toilet facility, only one facility in each toilet room counts toward these requirements.

In this table, "number of employees" means the maximum number of employees present at any one time on a regular shift.

Number of employees	Minimum number of water closets
1 to 15	1
16 to 35	2
36 to 55	3
56 to 80	4
81 to 110	5

Number of employees	Minimum number of water closets
111 to 150	6
Over 150	One additional fixture for each additional 40 employees

(3) Where toilet rooms are occupied by one person at a time, can be locked from the inside, and contain at least one water closet, separate toilet rooms for each sex need not be provided.

(4) Where toilet facilities will not be used by women, urinals may be provided instead of water closets, except that the number of water closets must not be less than 2/3 of the minimum specified.

(5) The sewage disposal method must not endanger the health of employees.

(6) Toilet paper with holder must be provided for every water closet.

(7) Each water closet must occupy a separate compartment with a door and walls or partitions between fixtures high enough to ensure privacy.

[97-09-013, recodified as § 296-307-24018, filed 4/7/97, effective 4/7/97. Statutory Authority: RCW 49.17.040, [49.17.]050 and [49.17.]060. 96-22-048, § 296-306A-24018, filed 10/31/96, effective 12/1/96.]

WAC 296-307-24021 What washing facilities must an employer provide? You must provide facilities for maintaining personal cleanliness in the workplace. The facilities must be convenient for employees and maintained in a sanitary condition.

[97-09-013, recodified as § 296-307-24021, filed 4/7/97, effective 4/7/97. Statutory Authority: RCW 49.17.040, [49.17.]050 and [49.17.]060. 96-22-048, § 296-306A-24021, filed 10/31/96, effective 12/1/96.]

WAC 296-307-24024 What requirements apply to lavatories? (1) You must ensure that lavatories are available in all workplaces.

(2) Each lavatory must have hot and cold running water, or tepid running water.

(3) You must provide hand soap or similar cleansing agent.

(4) You must provide individual hand towels, warm air blowers, or clean individual sections of continuous cloth toweling convenient to the lavatories.

[97-09-013, recodified as § 296-307-24024, filed 4/7/97, effective 4/7/97. Statutory Authority: RCW 49.17.040, [49.17.]050 and [49.17.]060. 96-22-048, § 296-306A-24024, filed 10/31/96, effective 12/1/96.]

WAC 296-307-24027 When must an employer provide change rooms? (1) Whenever employees are required by a WISHA standard to wear protective clothing because of the possibility of contamination with toxic materials, you must provide change rooms with separate storage facilities for street clothes and for the protective clothing.

(2) If you provide work clothes for employees, they must be dry.

[97-09-013, recodified as § 296-307-24027, filed 4/7/97, effective 4/7/97. Statutory Authority: RCW 49.17.040, [49.17.]050 and [49.17.]060. 96-22-048, § 296-306A-24027, filed 10/31/96, effective 12/1/96.]

WAC 296-307-24030 What requirements apply to consumption of food and beverages in the workplace? (1) This section applies to workplaces where employees may consume food, beverages, or both on the premises.

(2) No employee may consume food or beverages in a toilet room nor in any area exposed to a toxic material.

(3) If your workplace exposes employees to injurious dusts or other toxic materials, you must provide a separate lunchroom unless it is convenient for employees to lunch away from the premises. The size of the lunchroom must be based on the maximum number of persons using the room at one time, according to the following table.

Number of persons	Square feet per person
25 and less	13
26 - 74	12
75 - 149	11
150 and over	10

(4) You must provide receptacles of smooth, corrosion resistant, easily cleanable, or disposable materials for the disposal of waste food. You must provide enough receptacles to encourage their use and to prevent overfilling. Receptacles must be emptied at least once a working day and maintained in sanitary condition. Receptacles must have a solid tight-fitting cover unless sanitary condition can be maintained without a cover.

(5) No food or beverages may be stored in toilet rooms or in an area exposed to toxic material.

(6) All employee food service facilities and operations must follow sound hygienic principles. If all or part of the food service is provided, the food dispensed must be wholesome and free from spoilage. Food must be processed, prepared, handled, and stored so as to prevent contamination.

[97-09-013, recodified as § 296-307-24030, filed 4/7/97, effective 4/7/97. Statutory Authority: RCW 49.17.040, [49.17.]050 and [49.17.]060. 96-22-048, § 296-306A-24030, filed 10/31/96, effective 12/1/96.]

WAC 296-307-24033 How must waste be stored and removed? (1) You must ensure that any receptacle used for waste or garbage that may rot is constructed so that it does not leak and can be thoroughly cleaned and maintained in a sanitary condition. A receptacle must have a solid tight-fitting cover, unless it can be maintained in a sanitary condition without a cover. Receptacles designed to maintain sanitary condition may be used in place of this requirement.

(2) All sweepings, solid or liquid wastes, refuse, and garbage must be removed to avoid creating a health menace, and as often as necessary to maintain the workplace in a sanitary condition.

[97-09-013, recodified as § 296-307-24033, filed 4/7/97, effective 4/7/97. Statutory Authority: RCW 49.17.040, [49.17.]050 and [49.17.]060. 96-22-048, § 296-306A-24033, filed 10/31/96, effective 12/1/96.]

WAC 296-307-24036 When must an employer have a vermin control program? Every building with personal service, food preparation, or eating rooms must be constructed, equipped, and maintained to restrict infestation by rodents, insects, and other vermin. You must have a continuing and effective extermination program where vermin are present.

[97-09-013, recodified as § 296-307-24036, filed 4/7/97, effective 4/7/97. Statutory Authority: RCW 49.17.040, [49.17.]050 and [49.17.]060. 96-22-048, § 296-306A-24036, filed 10/31/96, effective 12/1/96.]

Part O
Walking Working Surfaces; Fixed Industrial Stairs; Aerial Manlifts

WAC 296-307-250 Walking working surfaces, elevated walkways, and platforms.

[97-09-013, recodified as § 296-307-250, filed 4/7/97, effective 4/7/97. Statutory Authority: RCW 49.17.040, [49.17.]050 and [49.17.]060. 96-22-048, § 296-306A-250, filed 10/31/96, effective 12/1/96.]

WAC 296-307-25003 What definitions apply to this section? "Floor hole" means an opening with the smallest dimension between one and 12 inches, in any floor, platform, pavement, or yard, through which materials may fall but not people. Examples are a belt hole, pipe opening, or slot opening.

"Floor opening" means an opening with the smallest dimension of 12 inches or more, in any floor, platform, pavement, or yard, through which people may fall. Examples are a hatchway, stair or ladder opening, pit, or large manhole. Floor openings occupied by elevators, dumb waiters, conveyors, machinery, or containers are excluded from this definition.

"Handrail" means a single bar or pipe supported on brackets from a wall or partition to furnish persons with a handhold in case of tripping.

"Platform" means a working space for people that is elevated above the surrounding floor or ground, such as a balcony or platform for the operation of machinery and equipment.

"Runway" means a passageway used by people that is elevated above the surrounding floor or ground level, such as a footwalk along shafting or a walkway between buildings.

"Standard railing" means a vertical barrier along exposed edges of a floor opening, wall opening, ramp, platform, or runway to prevent people from falling.

"Standard strength and construction" means any construction of railings, covers, or other guards that meets the requirements of this section.

"Stair railing" means a vertical barrier along exposed sides of a stairway to prevent people from falling.

"Toeboard" means a vertical barrier at floor level along exposed edges of a floor opening, wall opening, platform, runway, or ramp to prevent materials from falling.

"Wall hole" means an opening between one and 30 inches high, of any width, in any wall or partition, such as a ventilation hole or drainage scupper.

"Wall opening" means an opening at least 30 inches high and 18 inches wide, in any wall or partition, through which people may fall, such as a yard-arm doorway or chute opening.

[97-09-013, recodified as § 296-307-25003, filed 4/7/97, effective 4/7/97. Statutory Authority: RCW 49.17.040, [49.17.]050 and [49.17.]060. 96-22-048, § 296-306A-25003, filed 10/31/96, effective 12/1/96.]

WAC 296-307-25006 When may railings be omitted? Railings may be omitted from sections of open-sided floors, platforms, or walkways where guard rails impair operations, if railings are replaced when they no longer impair operations.

[97-09-013, recodified as § 296-307-25006, filed 4/7/97, effective 4/7/97. Statutory Authority: RCW 49.17.040, [49.17.]050 and [49.17.]060. 96-22-048, § 296-306A-25006, filed 10/31/96, effective 12/1/96.]

WAC 296-307-25009 What protection must an employer provide for floor openings? (1) Every stairway floor opening must be guarded by a standard railing constructed according to this section. The railing must guard all exposed sides (except the entrance to the stairway). Infrequently used stairways where traffic across the opening prevents using a fixed standard railing (as when located in aisle spaces, etc.), may use an alternate guarding method. In these cases, the guard must have a hinged floor opening cover of standard strength and construction and removable standard railings on all exposed sides (except at the entrance to the stairway).

(2) Every ladderway floor opening or platform must be guarded by a standard railing with standard toeboard on all exposed sides (except at the entrance to the opening). The passage through the railing must have either a swinging gate or offset so that a person cannot walk directly into the opening.

(3) Every hatchway and chute floor opening must be guarded by one of the following:

(a) A hinged floor opening cover of standard strength and construction with standard railings, or a permanent cover with only one side exposed. When the opening is not in use, the cover must be closed or the exposed side must be guarded at both the top and middle by removable standard railings.

(b) A removable railing with toeboard on a maximum of two sides of the opening and with fixed standard railings and toeboards on all other exposed sides. The removable railings must be kept in place when the opening is not in use and should be hinged or mounted to be easily replaced.

(4) When employees must feed material into any hatchway or chute opening, you must provide protection to prevent people from falling through the opening.

(5) When practical, the area under floor openings must be fenced off. Otherwise, the area must be plainly marked with yellow lines and telltales hanging within 5-1/2 feet of the ground or floor level.

(6) Where floor openings are used to drop materials from one level to another, audible warning systems must be installed and used to indicate to employees on the lower level when material is dropped.

(7) Every skylight opening and hole must be guarded by a standard skylight screen or a fixed standard railing on all exposed sides.

(8) Every infrequently used pit and trapdoor floor opening must be guarded by a floor opening cover of standard strength and construction that should be hinged in place. When the cover is not in place, the pit or trap opening must be constantly attended or protected on all exposed sides by removable standard railings.

(9) Every manhole floor opening must be guarded by a standard manhole cover. The manhole cover may be left unhinged. When the cover is removed, the manhole opening must be constantly attended or protected by removable standard railings.

(10) Every temporary floor opening must have standard railings or must be constantly attended.

(11) Every floor hole that people can accidentally walk into must be guarded by either:

(a) A standard railing with standard toeboard on all exposed sides; or

(b) A floor hole cover of standard strength and construction that should be hinged in place. While the cover is not in place, the floor hole must be constantly attended or protected by a removable standard railing.

(12) Every floor hole surrounded by fixed machinery, equipment, or walls that prevent people from walking into it, must be protected by a cover that leaves openings a maximum of one inch wide. The cover must be securely held in place to prevent tools or materials from falling through.

(13) Where doors or gates open directly on a stairway, a platform must be provided so that the swing of the door does not reduce the platform width to less than 20 inches.

[97-09-013, recodified as § 296-307-25009, filed 4/7/97, effective 4/7/97. Statutory Authority: RCW 49.17.040, [49.17.]050 and [49.17.]060. 96-22-048, § 296-306A-25009, filed 10/31/96, effective 12/1/96.]

WAC 296-307-25012 What protection must an employer provide for wall openings and holes? (1) Every wall opening from which there is a drop of more than 4 feet must be guarded by one of the following:

(a) A rail, roller, picket fence, half door, or equivalent barrier.

The guard may be removable but should be hinged or mounted so it can be easily replaced. When employees working below the opening are exposed to falling materials, a removable toeboard or the equivalent must also be provided. When the opening is unused, the guard must be kept in position even with a door on the opening. In addition, a grab handle must be provided on each side of the opening with its center approximately 4 feet above floor level and of standard strength and mounting.

(b) An extension platform onto which materials can be hoisted for handling, and that has side rails or equivalent guards of standard specifications.

(2) Every chute wall opening from which there is a drop of more than 4 feet must be guarded according to subsection (1) of this section or as required by the conditions.

(3) Every window wall opening at a stairway landing, floor, platform, or balcony, from which there is a drop of more than 4 feet, and where the bottom of the opening is less than 3 feet above the platform or landing, must be guarded by standard slats, standard grillwork according to WAC 296-307-25042(3), or a standard railing.

Where the window opening is below the landing, or platform, a standard toeboard must be provided.

(4) Every temporary wall opening must have adequate guards that may be of less than standard construction.

(5) Where there is a hazard of materials falling through a wall hole, and the lower edge of the near side of the hole is less than 4 inches above the floor, and the far side of the hole is more than 5 feet above the next lower level, the hole must be protected by a standard toeboard or a solid enclosing screen, or according to WAC 296-307-25042(3).

[Statutory Authority: RCW 49.17.040. 98-24-096, § 296-307-25012, filed 12/1/98, effective 3/1/99. 97-09-013, recodified as § 296-307-25012, filed 4/7/97, effective 4/7/97. Statutory Authority: RCW 49.17.040, [49.17.]050 and [49.17.]060. 96-22-048, § 296-306A-25012, filed 10/31/96, effective 12/1/96.]

WAC 296-307-25015 What protection must an employer provide for open-sided floors, platforms, and runways? (1) Every open-sided floor or platform 4 feet or more above an adjacent floor or ground level must be guarded by a standard railing (or the equivalent according to WAC 296-307-25027) on all open sides, except where there is an entrance to a ramp, stairway, or fixed ladder. The railing must have a toeboard wherever, beneath the open sides:

(a) A person can pass; or

(b) There is moving machinery; or

(c) Materials falling onto equipment would create a hazard.

(2) Every runway must be guarded by a standard railing (or the equivalent according to WAC 296-307-25027) on all open sides that are 4 feet or more above floor or ground level. Wherever tools, machine parts, or materials are likely to be used on the runway, a toeboard must also be provided on each exposed side.

Runways used exclusively for special purposes (such as oiling, shafting, or filling tank cars) may have the railing on one side omitted when operating conditions require, if the hazard is minimized by using a runway at least 18 inches wide. Where people entering runways become exposed to machinery, electrical equipment, or hazards other than from falling, additional guarding may be necessary.

(3) Regardless of height, all open-sided floors, walkways, platforms, or runways above or adjacent to dangerous equipment, pickling or galvanizing tanks, degreasing units, or similar hazardous equipment, must be guarded with a standard railing and toeboard.

(4) Tools and loose materials must not be left on overhead platforms and scaffolds.

[Statutory Authority: RCW 49.17.040. 98-24-096, § 296-307-25015, filed 12/1/98, effective 3/1/99. 97-09-013, recodified as § 296-307-25015, filed 4/7/97, effective 4/7/97. Statutory Authority: RCW 49.17.040, [49.17.]050 and [49.17.]060. 96-22-048, § 296-306A-25015, filed 10/31/96, effective 12/1/96.]

WAC 296-307-25018 What requirements apply to stairway railings and guards? (1) Every flight of stairs having four or more risers must have standard stair railings or standard handrails as follows (stairway widths measured clear of all obstructions except handrails):

(a) Stairways less than 44 inches wide with both sides enclosed must have at least one handrail, preferably on the right side descending.

(b) Stairways less than 44 inches wide with one side open must have at least one stair railing on the open side.

(c) Stairways less than 44 inches wide with both sides open must have one stair railing on each side.

(d) Stairways more than 44 inches wide but less than 88 inches wide must have one handrail on each enclosed side and one stair railing on each open side.

(e) Stairways 88 or more inches wide must have one handrail on each enclosed side, one stair railing on each open side, and one intermediate stair railing at the approximate middle.

Exception: Vehicle service pit stairways are exempt from this requirement if hand or stair rails would prevent vehicle movement into position over the pit.

(2) Winding stairs must have a handrail that prevents walking on all portions of the treads that are less than 6 inches wide.

(3) Nonindustrial and "monumental" steps are exempt from the requirements of this section. However, public and private building steps at loading or receiving docks, in maintenance areas, etc., and stairs used exclusively by employees, must meet the requirements of this section.

[97-09-013, recodified as § 296-307-25018, filed 4/7/97, effective 4/7/97. Statutory Authority: RCW 49.17.040, [49.17.]050 and [49.17.]060. 96-22-048, § 296-306A-25018, filed 10/31/96, effective 12/1/96.]

WAC 296-307-25021 How must a standard railing be constructed? A standard railing must meet the following requirements:

(1) The railing has a top rail, intermediate rail, and posts.

(2) The railing height is between thirty-six and forty-two inches nominal from the upper surface of the top rail to the floor, platform, runway, or ramp level.

(3) The top rail is smooth.

(4) The intermediate rail is approximately halfway between the top rail and the floor, platform, runway, or ramp.

(5) The ends of the rails do not overhang the terminal posts except where the overhang does not create a hazard.

(6) Guardrails taller than 42 inches are constructed so they do not create a hazard. Additional mid-rails are installed so that openings beneath the top rail prevent a spherical object with a 19-inch or larger diameter from falling through.

[97-09-013, recodified as § 296-307-25021, filed 4/7/97, effective 4/7/97. Statutory Authority: RCW 49.17.040, [49.17.]050 and [49.17.]060. 96-22-048, § 296-306A-25021, filed 10/31/96, effective 12/1/96.]

WAC 296-307-25024 How must a stair railing be constructed? A stair railing must be constructed similar to a standard railing. The stair railing must be between 34 and 30 inches tall measured from the top of the top rail to the tread surface meeting the face of the riser at the forward edge of the tread.

[97-09-013, recodified as § 296-307-25024, filed 4/7/97, effective 4/7/97. Statutory Authority: RCW 49.17.040, [49.17.]050 and [49.17.]060. 96-22-048, § 296-306A-25024, filed 10/31/96, effective 12/1/96.]

WAC 296-307-25027 What are the requirements for railing dimensions? Standard railings must meet the following requirements:

(1) For wood railings:

(a) The posts are of at least two inch by four inch nominal stock spaced six feet apart or less; and

(b) The top and intermediate rails are of at least two inch by four inch nominal stock.

(c) If the top rail is made of two right-angle pieces of 1-inch by 4-inch stock, posts are spaced on 8-foot centers, with 2-inch by 4-inch intermediate rail.

(2) For pipe railings:

(a) The posts and top and intermediate railings are at least 1-1/2 inches nominal diameter (outside diameter); and

(b) The posts are spaced on centers of eight feet or less.

(3) For structural steel railings:

(a) The posts and top and intermediate rails are of 2-inch by 2-inch by 3/8-inch angles or other metal shapes of equivalent bending strength; and

(b) The posts are spaced on centers of eight feet or less.

(4) Post anchors and framing parts for all railings are constructed so that the completed structure can withstand a load of at least two hundred pounds applied in any direction at any point on the top rail.

(5) Other types, sizes, and arrangements of railing construction that meet the following requirements are acceptable:

(a) The top rail is smooth;

(b) The top rail is between thirty-six and forty-two inches nominal above the floor, platform, runway, or ramp level;

(c) The railing is strong enough to withstand two hundred pounds of pressure on the top rail;

(d) The railing provides protection between the top rail and the floor, platform, runway, ramp, or stair treads, equivalent to that of a standard intermediate rail;

(e) There are no overhanging rail ends unless the overhang does not create a hazard; such as baluster railings, scrollwork railings, or paneled railings.

Note: The dimensions specified are based on the U.S. Department of Agriculture Wood Handbook, No. 72, 1955 (No. 1 (S4S) Southern Yellow Pine (Modulus of Rupture 7,400 psi)) for wood; ANSI G 41.5-1970, American National Standard Specifications for Structural Steel, for structural steel; and ANSI B 125.1-1970, American National Standard Specifications for Welded and Steamless Steel Pipe, for pipe.

[97-09-013, recodified as § 296-307-25027, filed 4/7/97, effective 4/7/97. Statutory Authority: RCW 49.17.040, [49.17.]050 and [49.17.]060. 96-22-048, § 296-306A-25027, filed 10/31/96, effective 12/1/96.]

WAC 296-307-25030 What requirements apply to toeboards? (1) Standard toeboard height is at least four inches nominal from its top edge to the level of the floor, platform, runway, or ramp. The toeboard must be securely fastened in place and with a maximum of 1/4 inch clearance above floor level. It must be made of any substantial material that is either solid or with openings that are a maximum of one inch in diameter.

(2) Where material is piled high enough that a standard toeboard does not provide protection, paneling from the floor to the intermediate rail, or to the top rail, must be provided.

[97-09-013, recodified as § 296-307-25030, filed 4/7/97, effective 4/7/97. Statutory Authority: RCW 49.17.040, [49.17.]050 and [49.17.]060. 96-22-048, § 296-306A-25030, filed 10/31/96, effective 12/1/96.]

WAC 296-307-25033 How must handrails and railings be constructed? (1) A handrail must have a horizontal part mounted directly on a wall or partition by brackets attached to the lower side of the handrail. The brackets must be attached to ensure that there is a smooth surface along the top and both sides of the handrail. The handrail must be rounded or otherwise provide an adequate handhold for anyone grasping it to avoid falling. The ends of the handrail should be turned in to the supporting wall or arranged to prevent a projection hazard.

(2) Handrails must be a maximum of thirty-four inches high and at least thirty inches from the upper surface of the

handrail to the surface of the tread in line with the face of the riser or to the surface of the ramp.

(3) The size of handrails must be:

(a) For hardwood, at least two inches in diameter.

(b) For metal pipe, at least 1-1/2 inches in diameter.

(4) Brackets must be spaced a maximum of eight feet apart.

(5) Handrail mounting must be strong enough to withstand a load of at least two hundred pounds applied in any direction at any point on the rail.

(6) All handrails and railings shall have a clearance of at least 1-1/2 inches between the handrail or railing and the wall or any other object.

[97-09-013, recodified as § 296-307-25033, filed 4/7/97, effective 4/7/97. Statutory Authority: RCW 49.17.040, [49.17.]050 and [49.17.]060. 96-22-048, § 296-306A-25033, filed 10/31/96, effective 12/1/96.]

WAC 296-307-25036 What materials may be used for floor opening covers? Floor opening covers must be made of any material that meets the following strength requirements:

(1) Trench or conduit covers and their supports, when located in plant roadways, must be designed to carry a truck rear-axle load of at least 20,000 pounds.

(2) Manhole covers and their supports, when located in plant roadways, must meet local standard highway requirements if any; otherwise, they must be designed to carry a truck rear-axle of at least 20,000 pounds.

(3) Other floor opening covers must be made of any material that can carry a truck rear-axle load of at least 20,000 pounds. Covers may project a maximum of one inch above the floor level if all edges are chamfered to a maximum angle with the horizontal of thirty degrees. All hinges, handles, bolts, or other parts must set flush with the floor or cover surface.

[97-09-013, recodified as § 296-307-25036, filed 4/7/97, effective 4/7/97. Statutory Authority: RCW 49.17.040, [49.17.]050 and [49.17.]060. 96-22-048, § 296-306A-25036, filed 10/31/96, effective 12/1/96.]

WAC 296-307-25039 How must skylight screens be constructed and mounted? Skylight screens must be constructed and mounted to withstand a load of at least two hundred pounds applied perpendicularly anywhere on the screen. Skylight screen must be constructed and mounted so that, under ordinary loads or impacts, they will not deflect downward enough to break the glass below them. They must be constructed of grillwork with openings a maximum of four inches long or of slatwork with openings a maximum of two inches wide and any length.

[97-09-013, recodified as § 296-307-25039, filed 4/7/97, effective 4/7/97. Statutory Authority: RCW 49.17.040, [49.17.]050 and [49.17.]060. 96-22-048, § 296-306A-25039, filed 10/31/96, effective 12/1/96.]

WAC 296-307-25042 What protection must an employer provide for wall openings? (1) Wall opening barriers (rails, rollers, picket fences, and half doors) must be constructed and mounted, to withstand a load of at least two hundred pounds applied in any direction (except upward) at any point on the top rail.

(2) Wall opening grab handles must be at least twelve inches long and must be mounted to give 1-1/2 inches clearance from the side framing of the wall opening. The size, material, and anchoring of the grab handle must form a structure that can withstand a load of at least two hundred pounds applied in any direction at any point of the handle.

(3) Wall opening screens must be constructed and mounted to withstand a load of at least two hundred pounds applied horizontally anywhere on the near side of the screen. They must be of solid construction, of grillwork with openings a maximum of four inches long, or of slatwork with openings a maximum of two inches wide and any length.

[97-09-013, recodified as § 296-307-25042, filed 4/7/97, effective 4/7/97. Statutory Authority: RCW 49.17.040, [49.17.]050 and [49.17.]060. 96-22-048, § 296-306A-25042, filed 10/31/96, effective 12/1/96.]

WAC 296-307-260 Fixed industrial stairs.

[97-09-013, recodified as § 296-307-260, filed 4/7/97, effective 4/7/97. Statutory Authority: RCW 49.17.040, [49.17.]050 and [49.17.]060. 96-22-048, § 296-306A-260, filed 10/31/96, effective 12/1/96.]

WAC 296-307-26003 What does this section cover? WAC 296-307-260 covers the safe design and construction of fixed general industrial stairs. Fixed general industrial stairs includes interior and exterior stairs around machinery, tanks, and other equipment, and stairs leading to or from floors, platforms, or pits.

This section does not apply to stairs used for fire exits, to construction operations, to private buildings or residences, or to articulated stairs that are installed on floating roof tanks or on dock facilities, where the angle changes with the rise and fall of the base support.

Stairs of public and private buildings at loading or receiving docks, in maintenance areas, etc., or stairs that are used exclusively by employees, are considered "fixed industrial steps" and must meet these requirements.

[Statutory Authority: RCW 49.17.040. 98-24-096, § 296-307-26003, filed 12/1/98, effective 3/1/99. 97-09-013, recodified as § 296-307-26003, filed 4/7/97, effective 4/7/97. Statutory Authority: RCW 49.17.040, [49.17.]050 and [49.17.]060. 96-22-048, § 296-306A-26003, filed 10/31/96, effective 12/1/96.]

WAC 296-307-26006 What definitions apply to this section? "Nose or nosing" means the part of a tread projecting beyond the face of the riser immediately below.

"Open riser" means the air space between the treads of stairways without risers.

"Platform" means an extended step or landing breaking a continuous run of stairs.

"Railing" means a vertical barrier erected along exposed sides of stairways and platforms to prevent people from falling. The top part of the railing usually serves as a handrail.

"Rise" means the vertical distance from the top of a tread to the top of the next higher tread.

"Riser" means the upright part of a step at the back of a lower tread and near the leading edge of the next higher tread.

"Stairs or stairway" means a series of steps. A series of steps and landings having three or more risers constitutes stairs or a stairway.

"Tread" means the horizontal part of a step.

"Tread run" means the horizontal distance from the leading edge of a tread to the leading edge of an adjacent tread.

"Tread width" means the horizontal distance from front to back of tread, including nosing.

[97-09-013, recodified as § 296-307-26006, filed 4/7/97, effective 4/7/97. Statutory Authority: RCW 49.17.040, [49.17.]050 and [49.17.]060. 96-22-048, § 296-306A-26006, filed 10/31/96, effective 12/1/96.]

WAC 296-307-26009 Where are fixed stairs required? Fixed stairs must be provided for:

(1) Employee access from one structure level to another where operations require regular travel between levels.

(2) Employee access to operating platforms on any equipment that requires regular attention during operations.

(3) Employees that need daily access to elevations, or access at each shift, for purposes such as gauging, inspection, regular maintenance, etc., where:

(a) The work may expose employees to acids, caustics, gases, or other harmful substances; or

(b) Employees must normally carry tools or equipment by hand.

Note: This section does not prohibit the use of fixed ladders for access to elevated tanks, towers, and similar structures, overhead traveling cranes, etc., where the use of fixed ladders is common practice.

[97-09-013, recodified as § 296-307-26009, filed 4/7/97, effective 4/7/97. Statutory Authority: RCW 49.17.040, [49.17.]050 and [49.17.]060. 96-22-048, § 296-306A-26009, filed 10/31/96, effective 12/1/96.]

WAC 296-307-26012 Where are spiral stairs prohibited? Spiral stairways are prohibited except for special limited use and secondary access when a conventional stairway is not practical. Winding stairways may be installed on tanks and similar round structures where the diameter of the structure is a minimum of five feet.

[97-09-013, recodified as § 296-307-26012, filed 4/7/97, effective 4/7/97. Statutory Authority: RCW 49.17.040, [49.17.]050 and [49.17.]060. 96-22-048, § 296-306A-26012, filed 10/31/96, effective 12/1/96.]

WAC 296-307-26015 How strong must fixed stairs be? Fixed stairways must be designed and constructed to carry a load of five times the normal live load anticipated, and must be at least strong enough to carry safely a moving concentrated load of 1,000 pounds.

[97-09-013, recodified as § 296-307-26015, filed 4/7/97, effective 4/7/97. Statutory Authority: RCW 49.17.040, [49.17.]050 and [49.17.]060. 96-22-048, § 296-306A-26015, filed 10/31/96, effective 12/1/96.]

WAC 296-307-26018 How wide must fixed stairs be? Fixed stairways must be at least 22 inches wide.

[97-09-013, recodified as § 296-307-26018, filed 4/7/97, effective 4/7/97. Statutory Authority: RCW 49.17.040, [49.17.]050 and [49.17.]060. 96-22-048, § 296-306A-26018, filed 10/31/96, effective 12/1/96.]

WAC 296-307-26021 What angles may stairways be installed at? (1) Fixed stairs must be installed at angles to the horizontal of between thirty and fifty degrees. Any uniform combination of rise/tread dimensions may be used that will provide a stairway at an angle within the permissible range.

The following table lists examples of rise/tread dimensions that will produce a stairway within the permissible range. Rise/tread combinations are not limited to those in the table.

Angle to horizontal	Rise (in inches)	Tread run (in inches)
30°35’	6-1/2	11
32°08’	6-3/4	10-3/4
33°41’	7	10-1/2
35°16’	7-1/4	10-1/4
36°52’	7-1/2	10
38°29’	7-3/4	9-3/4
40°08’	8	9-1/2
41°44’	8-1/4	9-1/4
43°22’	8-1/2	9
45°00’	8-3/4	8-3/4
46°38’	9	8-1/2
48°16’	9-1/4	8-1/4
49°54’	9-1/2	8

(2) A permanent stairway may be installed at an angle above the fifty degree critical angle when space limitations require. Such installations (commonly called inclined ladders or ships ladders) must have handrails on both sides and open risers. They must be capable of sustaining a live load of one hundred pounds per square foot with a safety factor of four. The following preferred and critical angles from the horizontal are recommended for inclined ladders and ships ladders:

(a) 35 to 60 degrees—Preferred angle from horizontal.

(b) 60 to 70 degrees—Critical angle from horizontal.

[97-09-013, recodified as § 296-307-26021, filed 4/7/97, effective 4/7/97. Statutory Authority: RCW 49.17.040, [49.17.]050 and [49.17.]060. 96-22-048, § 296-306A-26021, filed 10/31/96, effective 12/1/96.]

WAC 296-307-26024 What requirements apply to stair treads? (1) When risers are used, each tread and the top landing of a stairway should have a nose extending 1/2 to one inch beyond the face of the lower riser.

(2) Noses should have an even leading edge.

(3) All treads must be reasonably slip-resistant and the nosings must be of nonslip finish. Welded bar grating treads without nosings are acceptable if the leading edge can easily be identified by employees descending the stairway and the tread is serrated or is nonslip.

(4) Rise height and tread width must be uniform throughout any flight of stairs including any foundation structure used as one or more treads of the stairs.

[97-09-013, recodified as § 296-307-26024, filed 4/7/97, effective 4/7/97. Statutory Authority: RCW 49.17.040, [49.17.]050 and [49.17.]060. 96-22-048, § 296-306A-26024, filed 10/31/96, effective 12/1/96.]

WAC 296-307-26027 What requirements apply to the length of stairways? Long flights of stairs, unbroken by landings or intermediate platforms, should be avoided. You should consider providing intermediate platforms where practical and for frequently used stairways. Stairway platforms must be at least as wide as the stairway and at least 30 inches long, measured in the direction of travel.

[97-09-013, recodified as § 296-307-26027, filed 4/7/97, effective 4/7/97. Statutory Authority: RCW 49.17.040, [49.17.]050 and [49.17.]060. 96-22-048, § 296-306A-26027, filed 10/31/96, effective 12/1/96.]

WAC 296-307-26030 What requirements apply to railings and handrails on fixed stairs? Standard railings must be provided on the open sides of all exposed stairways and stair platforms. Handrails must be provided on at least one side of closed stairways, preferably on the right side descending. Stair railings and handrails must be installed according to WAC 296-307-250.

[Statutory Authority: RCW 49.17.040. 98-24-096, § 296-307-26030, filed 12/1/98, effective 3/1/99. 97-09-013, recodified as § 296-307-26030, filed 4/7/97, effective 4/7/97. Statutory Authority: RCW 49.17.040, [49.17.]050 and [49.17.]060. 96-22-048, § 296-306A-26030, filed 10/31/96, effective 12/1/96.]

WAC 296-307-26033 What requirements apply to alternating tread-type stairs? "Alternating tread-type stairs" means stairs with a series of steps between 50 and 70 degrees from horizontal, attached to a center support rail in an alternating manner so that a user of the stairs never has both feet at the same level at the same time.

(1) Alternating tread-type stairs must be designed, installed, used, and maintained according to the manufacturer's specifications, and must have the following:

(a) Stair rails on all open sides;

(b) Handrails on both sides of enclosed stairs;

(c) Stair rails and handrails that provide an adequate handhold for a user grasping it to avoid a fall;

(d) A minimum of 17 inches between handrails;

(e) A minimum width of 22 inches overall;

(f) A minimum tread depth of 8 inches;

(g) A minimum tread width of 7 inches; and

(h) A maximum rise of 9 1/2 inches to the tread surface of the next alternating tread.

(2) Alternating tread-type stairs must have a maximum 20-foot continuous rise. Where more than a 20-foot rise is necessary to reach the top of a required stair, one or more intermediate platforms must be provided according to WAC 296-307-26027.

(3) Stairs and platforms must be installed so the top landing of the alternating tread stair is flush with the top of the landing platform.

(4) Stair design and construction must sustain a load of at least five times the normal live load, and be at least strong enough to carry safely a moving concentrated load of 1,000 pounds.

(5) Treads must have slip-resistant surfaces.

(6) Where a platform or landing is used, the width must be at least as wide as the stair and at least 30-inches deep in the direction of travel. Stairs must be flush with the top of the landing platform.

[Statutory Authority: RCW 49.17.040. 98-24-096, § 296-307-26033, filed 12/1/98, effective 3/1/99. 97-09-013, recodified as § 296-307-26033, filed 4/7/97, effective 4/7/97. Statutory Authority: RCW 49.17.040, [49.17.]050 and [49.17.]060. 96-22-048, § 296-306A-26033, filed 10/31/96, effective 12/1/96.]

WAC 296-307-26036 What other requirements apply to fixed stairs? (1) Vertical clearance above any stair tread to an overhead obstruction must be at least 7 feet measured from the leading edge of the tread.

(2) Stairs with treads less than 9 inches wide should have open risers.

(3) Open grating type treads are desirable for outside stairs.

[97-09-013, recodified as § 296-307-26036, filed 4/7/97, effective 4/7/97. Statutory Authority: RCW 49.17.040, [49.17.]050 and [49.17.]060. 96-22-048, § 296-306A-26036, filed 10/31/96, effective 12/1/96.]

WAC 296-307-270 Aerial manlift equipment.

[97-09-013, recodified as § 296-307-270, filed 4/7/97, effective 4/7/97. Statutory Authority: RCW 49.17.040, [49.17.]050 and [49.17.]060. 96-22-048, § 296-306A-270, filed 10/31/96, effective 12/1/96.]

WAC 296-307-27005 What requirements apply to aerial manlift equipment? (1) We will accept safety factor test data on working or structural components from one of the following as evidence that a manlift meets minimum safety requirements:

(a) The manufacturer;

(b) A competent testing laboratory;

(c) A registered engineering firm; or

(d) A registered engineer.

If, after use, it appears doubtful whether this equipment will meet the above requirements, we may require that tests be conducted, and we may order that you make corrections.

(2) All aerial manlifts must have working brake systems.

(3) Automatic apertures must be installed in the hydraulic systems of aerial manlifts to maintain the boom in position in case any part of the hydraulic pressure system fails.

(4) Controls must be guarded by partial enclosures to minimize accidental contact.

(5) The manufacturer's recommended maximum load limit must be posted conspicuously near the controls and must be kept in a legible condition.

(6) All critical hydraulic and pneumatic components must meet the provisions of ANSI A92.2-1969, Section 4.9 Bursting Safety Factor. Critical components are those which, in case of failure, would cause a free fall or free rotation of the boom. All noncritical components must have a bursting safety factor of at least two to one.

[97-09-013, recodified as § 296-307-27005, filed 4/7/97, effective 4/7/97. Statutory Authority: RCW 49.17.040, [49.17.]050 and [49.17.]060. 96-22-048, § 296-306A-27005, filed 10/31/96, effective 12/1/96.]

WAC 296-307-27010 What requirements apply to using aerial manlift equipment? (1) The manufacturer's instructional manual, if any, must be used to establish the proper operational sequences and maintenance procedures. If there is no manual, you must develop instructions. The instructions must be available for reference by operators.

(2) The assigned operator must make a daily visual inspection and perform the tests recommended by the manufacturer.

(3) Only employees qualified by training or experience may operate aerial manlifts.

(4) Employees must report defective aerial manlift equipment to you as soon as identified. Using defective equipment is prohibited when the defect may cause an accident.

(5) When moving to and from the job site, the basket of the manlift must be in the low position.

(6) Unsafe practices are prohibited, such as, sitting or standing on the basket edge, standing on material placed

across the basket, or working from a ladder set inside the basket.

(7) The basket must not be rested on a fixed object so that the weight of the boom is supported by the basket.

(8) The employee and the aerial manlift equipment must maintain distance from high voltage lines according to WAC 296-307-150.

[Statutory Authority: RCW 49.17.040. 98-24-096, § 296-307-27010, filed 12/1/98, effective 3/1/99. 97-09-013, recodified as § 296-307-27010, filed 4/7/97, effective 4/7/97. Statutory Authority: RCW 49.17.040, [49.17.]050 and [49.17.]060. 96-22-048, § 296-306A-27010, filed 10/31/96, effective 12/1/96.]

Part P
Guarding Power Transmission Machinery

WAC 296-307-280 Guarding power transmission machinery.

[97-09-013, recodified as § 296-307-280, filed 4/7/97, effective 4/7/97. Statutory Authority: RCW 49.17.040, [49.17.]050 and [49.17.]060. 96-22-048, § 296-306A-280, filed 10/31/96, effective 12/1/96.]

WAC 296-307-28002 What power transmission belts are covered by this section? WAC 296-307-280 covers all types and shapes of power transmission belts.

EXCEPTION: The following power transmission belts are exempt from WAC 296-307-280 when operating at 250 feet per minute or less:
(1) Flat belts that are one inch wide or less.
(2) Flat belts that are 2" wide or less and are free from metal lacings or fasteners.
(3) Round belts that are 1/2" in diameter or less.
(4) Single strand V-belts that are 13/32" wide or less.

[Statutory Authority: RCW 49.17.040. 98-24-096, § 296-307-28002, filed 12/1/98, effective 3/1/99. 97-09-013, recodified as § 296-307-28002, filed 4/7/97, effective 4/7/97. Statutory Authority: RCW 49.17.040, [49.17.]050 and [49.17.]060. 96-22-048, § 296-306A-28002, filed 10/31/96, effective 12/1/96.]

WAC 296-307-28004 What does "guarded by location" mean? "Guarded by location" means that the location of a component eliminates potential hazards. A component seven feet or more above a working surface is considered guarded by location.

[97-09-013, recodified as § 296-307-28004, filed 4/7/97, effective 4/7/97. Statutory Authority: RCW 49.17.040, [49.17.]050 and [49.17.]060. 96-22-048, § 296-306A-28004, filed 10/31/96, effective 12/1/96.]

WAC 296-307-28006 What general requirements apply to machine guarding? (1) All power transmission components must be guarded according to the requirements of this section.

(2) You must protect employees from coming into contact with moving machinery parts by:

(a) A guard or shield or guarding by location; or

(b) A guardrail or fence whenever a guard or shield or guarding by location is infeasible.

(3) Strength and design of guards.

(a) Guards must be designed and located to prevent inadvertent contact with the hazard.

(b) Unless otherwise specified, each guard and its supports must be strong enough to withstand the force that a 250 pound person would exert leaning on or falling against the guard.

(c) Guards must be securely fastened to the equipment or building.

(4) A guard or shield on stationary equipment must be provided at the mesh point or pinch point where the chain or belt contacts the sprocket or pulley.

(5) Machines that will throw stock, material, or objects must be covered or provided with a device designed and constructed to minimize this action. (Machines such as rip saws, rotary mowers and beaters, rotary tillers are included in this classification.)

(6) For requirements relating to the control of hazardous energy (lockout-tagout) see WAC 296-307-320.

[Statutory Authority: RCW 49.17.040. 98-24-096, § 296-307-28006, filed 12/1/98, effective 3/1/99. 97-09-013, recodified as § 296-307-28006, filed 4/7/97, effective 4/7/97. Statutory Authority: RCW 49.17.040, [49.17.]050 and [49.17.]060. 96-22-048, § 296-306A-28006, filed 10/31/96, effective 12/1/96.]

WAC 296-307-28014 What requirements apply to prime-mover guards? "Flywheels" include flywheels, balance wheels, and flywheel pulleys mounted and revolving on crankshaft of engine or other shafting.

"Prime movers" include steam, gas, oil, and air engines, motors, steam and hydraulic turbines, and other equipment used as a source of power.

(1) Unless guarded by location, flywheels must be guarded according to the following requirements:

(a) Guard enclosures are made of sheet, perforated, or expanded metal, or woven wire.

(b) Guard rails are between 15 and 20 inches from the rim. When a flywheel extends into a pit or is within 12 inches of the floor, a standard toeboard is provided.

(c) When the upper rim of a flywheel extends through a working floor, it is surrounded by a guardrail and toeboard.

(d) Exception: When a flywheel with a smooth rim 5 feet or less in diameter cannot be guarded by the above methods, you must guard by meeting the following requirements:

On the exposed side, cover the flywheel spokes with a disk that makes a smooth surface and edge, and provides for inspection. You may leave an open space, less than 4 inches wide, between the outside edge of the disk and the rim of the wheel, to turn the wheel over. If you use a disk, keys or other projections left uncovered by the projections shall be cut off or covered.

Note: This exception does not apply to flywheels with solid web centers.

(e) At the flywheel of a gas or oil engine, you may provide an adjustable guard for starting the engine or for running adjustment. A slot opening for a jack bar is permitted.

(f) For flywheels above working areas, you must install guards that are strong enough to hold the weight of the flywheel if the shaft or wheel mounting fails.

(2) Cranks and connecting rods, when exposed to contact, must be guarded according to WAC 296-307-28046 and 296-307-28048, or by a guardrail according to WAC 296-307-28060.

(3) Tail rods or extension piston rods must be guarded according to WAC 296-307-28046 and 296-307-28048, or by

a guardrail on the sides and end, with a clearance of between 15 and 20 inches when rod is fully extended.

[Statutory Authority: RCW 49.17.040. 98-24-096, § 296-307-28014, filed 12/1/98, effective 3/1/99. 97-09-013, recodified as § 296-307-28014, filed 4/7/97, effective 4/7/97. Statutory Authority: RCW 49.17.040, [49.17.]050 and [49.17.]060. 96-22-048, § 296-306A-28014, filed 10/31/96, effective 12/1/96.]

WAC 296-307-28016 What requirements apply to guarding shafting? Revolving shafts must be guarded by a standard safeguard unless guarded by location.

(1) All shafting must be secured against excessive end movement.

(2) Guarding horizontal shafting.

(a) Unless guarded by location, all exposed parts of horizontal shafting, must be enclosed in a guard that covers the shafting completely or by a trough that covers the sides and top or sides and bottom of the shafting as location requires.

(b) Shafting under bench machines must be enclosed by a guard that covers the shafting completely or by a trough that covers the sides and top or sides and bottom of the shafting as location requires. The sides of the trough must extend to at least 6 inches from the underside of table. If shafting is near the floor, the trough must extend to at least 6 inches from the floor. In every case, the sides of trough must extend at least 2 inches beyond the shafting or projection.

Exception: Maintenance runways are exempt from this requirement. "Maintenance runway" means any permanent runway or platform used for oiling, maintenance, running adjustment, or repair work, but not for passageway.

(3) Unless guarded by location, vertical and inclined shafting must be enclosed according to WAC 296-307-28046 and 296-307-28050 through 296-307-28060.

Exception: Maintenance runways are exempt from this requirement.

(4) Projecting shaft ends.

(a) Projecting shaft ends must have a smooth edge and end and must not project more than one-half the diameter of the shaft unless guarded by nonrotating caps or safety sleeves.

(b) Unused keyways must be filled up or covered.

[Statutory Authority: RCW 49.17.040. 98-24-096, § 296-307-28016, filed 12/1/98, effective 3/1/99. 97-09-013, recodified as § 296-307-28016, filed 4/7/97, effective 4/7/97. Statutory Authority: RCW 49.17.040, [49.17.]050 and [49.17.]060. 96-22-048, § 296-306A-28016, filed 10/31/96, effective 12/1/96.]

WAC 296-307-28018 What requirements apply to guarding pulleys? (1) Unless guarded by location, pulleys must be guarded according to WAC 296-307-28046 and 296-307-28050 through 296-307-28060. Pulleys serving as balance wheels (e.g., punch presses) on which the point of contact between belt and pulley is more than 6 feet 6 inches from the floor or platform may be guarded with a disk covering the spokes.

(2) If the distance to the nearest fixed pulley, clutch, or hanger is equal to or less than the width of the belt, then you must provide a guide to prevent the belt from leaving the pulley on the side where insufficient clearance exists.

(3) Where there are overhanging pulleys on line, jack, or countershafts with no bearing between the pulley and the outer end of the shaft, you should provide a guide to prevent the belt from running off the pulley.

(4) Pulleys with cracks, or pieces broken out of rims are prohibited.

(5) Pulleys must be designed and balanced for the operating speed.

(6) Composition or laminated wood pulleys must not be installed where they are likely to deteriorate.

[Statutory Authority: RCW 49.17.040. 98-24-096, § 296-307-28018, filed 12/1/98, effective 3/1/99. 97-09-013, recodified as § 296-307-28018, filed 4/7/97, effective 4/7/97. Statutory Authority: RCW 49.17.040, [49.17.]050 and [49.17.]060. 96-22-048, § 296-306A-28018, filed 10/31/96, effective 12/1/96.]

WAC 296-307-28020 What requirements apply to guarding horizontal belt, rope, and chain drives? "Belts" include all power transmission belts, such as flat belts, round belts, V-belts, etc., unless otherwise specified.

(1) Where both runs of horizontal belts are 7 feet or less from the floor level, the guard must extend to at least 15 inches above the belt or to a standard height. (See Table P-1.)

Exception: Where both runs of a horizontal belt are 42 inches or less from the floor, the belt must be fully enclosed according to WAC 296-307-28046 and 296-307-28050 through 296-307-28060.

(2) In power development rooms, a guardrail may be used instead of the guard.

[Statutory Authority: RCW 49.17.040. 98-24-096, § 296-307-28020, filed 12/1/98, effective 3/1/99. 97-09-013, recodified as § 296-307-28020, filed 4/7/97, effective 4/7/97. Statutory Authority: RCW 49.17.040, [49.17.]050 and [49.17.]060. 96-22-048, § 296-306A-28020, filed 10/31/96, effective 12/1/96.]

WAC 296-307-28022 What requirements apply to guarding overhead horizontal belt, rope, and chain drives? (1) Unless guarded by location, overhead horizontal belts must be guarded on the sides and bottom according to WAC 296-307-28054.

(2) Unless guarded by location, horizontal overhead belts must be guarded for their entire length when:

(a) Located over passageways or work places and traveling 1,800 feet or more per minute.

(b) The center to center distance between pulleys is 10 feet or more.

(c) The belt is 8 inches wide or more.

(3) Where the upper and lower runs of horizontal belts are located so that employees can pass between them, the passage must be either:

(a) Completely barred according to WAC 296-307-28046 and 296-307-28050 through 296-307-28060; or

(b) In a passage that employees must use, there must be a platform over the lower run guarded on either side by a railing that is completely filled in with wire mesh or other filler, or by a solid barrier. The upper run must be guarded to prevent contact by the employee or by objects carried by the employee.

(4) Overhead chain and link belt drives must be guarded according to the same requirements as overhead horizontal belts.

(5) American or continuous system rope drives located where the condition of the rope (particularly the splice) cannot be constantly and conveniently observed, must have an

alarm (preferably electric-bell type) that will warn when the rope begins to fray.

[Statutory Authority: RCW 49.17.040. 98-24-096, § 296-307-28022, filed 12/1/98, effective 3/1/99. 97-09-013, recodified as § 296-307-28022, filed 4/7/97, effective 4/7/97. Statutory Authority: RCW 49.17.040, [49.17.]050 and [49.17.]060. 96-22-048, § 296-306A-28022, filed 10/31/96, effective 12/1/96.]

WAC 296-307-28024 What requirements apply to guarding vertical and inclined belts? (1) Vertical and inclined belts must be guarded according to WAC 296-307-28044 and 296-307-28050 through 296-307-28060.

(2) All guards for inclined belts must provide a minimum clearance of 7 feet between belt and floor at any point outside of the guard.

(3) A vertical or inclined belt may be guarded with a nip-point belt and pulley guard, if it is:

(a) 2-1/2 inches wide or less;

(b) Running at a speed of less than one thousand feet per minute; and

(c) Free from metal lacings or fastenings.

"Nip-point belt and pulley guard" means a device that encloses the pulley and has rounded or rolled edge slots through which the belt passes.

(4) Vertical belts running over a lower pulley more than seven feet above floor or platform must be guarded according to the same requirements as horizontal overhead belts, if the belt is:

(a) Located over passageways or work places and traveling 1,800 feet or more per minute;

(b) Eight inches wider or more.

[Statutory Authority: RCW 49.17.040. 98-24-096, § 296-307-28024, filed 12/1/98, effective 3/1/99. 97-09-013, recodified as § 296-307-28024, filed 4/7/97, effective 4/7/97. Statutory Authority: RCW 49.17.040, [49.17.]050 and [49.17.]060. 96-22-048, § 296-306A-28024, filed 10/31/96, effective 12/1/96.]

WAC 296-307-28026 What requirements apply to guarding cone-pulley belts? (1) The cone belt and pulley must have a belt shifter that adequately guards the nip point of the belt and pulley. If the frame of the belt shifter does not adequately guard the nip point of the belt and pulley, the nip point must be protected by a vertical guard in front of the pulley that extends at least to the top of the largest step of the cone.

"Belt shifter" means a device for mechanically shifting belts from tight to loose pulleys or vice versa, or for shifting belts on cones of speed pulleys.

(2) If the belt is endless or laced with rawhide laces, and no belt shifter is used, the belt may be guarded according to the following:

(a) The nip point of the belt and pulley is protected by a nip point guard in front of the cone;

(b) The guard extends at least to the top of the largest step of the cone; and

(c) The guard is formed to show the contour of the cone.

(3) If the cone is less than 3 feet from the floor or working platform, the cone pulley and belt must be guarded to a height of 3 feet regardless of whether the belt is endless or laced with rawhide.

[97-09-013, recodified as § 296-307-28026, filed 4/7/97, effective 4/7/97. Statutory Authority: RCW 49.17.040, [49.17.]050 and [49.17.]060. 96-22-048, § 296-306A-28026, filed 10/31/96, effective 12/1/96.]

WAC 296-307-28028 What requirements apply to guarding belt tighteners? (1) Suspended counterbalanced belt tighteners and all components must be substantially constructed and securely fastened. The bearings must be securely capped. You must provide a mechanism to prevent the tightener from falling in case the belt breaks.

(2) Unless guarded by location, suspended counterweights must be encased to prevent accident.

(3) Belt tighteners used for starting and stopping machinery, unless held by gravity in the "off" or "out of service" position, must have a mechanism that will hold the belt tightener away from the belt when not in use. The mechanism must automatically grip, latch or otherwise fasten itself to and hold the belt tightener in "off" or "out of service" position until released by hand.

[97-09-013, recodified as § 296-307-28028, filed 4/7/97, effective 4/7/97. Statutory Authority: RCW 49.17.040, [49.17.]050 and [49.17.]060. 96-22-048, § 296-306A-28028, filed 10/31/96, effective 12/1/96.]

WAC 296-307-28030 What requirements apply to guarding gears, sprockets, and chains? (1) Gears must be guarded by one of the following methods:

(a) A complete enclosure; or

(b) A standard guard according to WAC 296-307-28050 through 296-307-28060, at least 7 feet high extending 6 inches above the mesh point of the gears; or

(c) A band guard covering the face of gear. The guard must have flanges extended inward beyond the root of the teeth on the exposed side or sides. If a part of the train of gears guarded by a band guard is less than 6 feet from the floor, the gear must be guarded by a disk guard or by a complete enclosure at least 6 feet tall.

(2) Hand-operated gears used only to adjust hand-powered machine parts may be unguarded. However, we recommend guarding these gears.

(3) Unless guarded by location, all sprocket wheels and chains must be enclosed. Where the drive extends over other machine or working areas, you must provide protection against falling parts.

Exception: This section does not apply to manually operated sprockets.

(4) When gears require frequent oiling, you must provide openings with hinged or sliding self-closing covers. All points not readily accessible must have oil feed tubes if lubricant is added while machinery is in motion.

[Statutory Authority: RCW 49.17.040. 98-24-096, § 296-307-28030, filed 12/1/98, effective 3/1/99. 97-09-013, recodified as § 296-307-28030, filed 4/7/97, effective 4/7/97. Statutory Authority: RCW 49.17.040, [49.17.]050 and [49.17.]060. 96-22-048, § 296-306A-28030, filed 10/31/96, effective 12/1/96.]

WAC 296-307-28032 What requirements apply to guarding friction drives? When exposed to contact, the driving point of all friction drives must be guarded. All arm or spoke friction drives and all web friction drives with holes in the web must be entirely enclosed. When exposed to contact, all projecting belts on friction drives must be guarded.

[97-09-013, recodified as § 296-307-28032, filed 4/7/97, effective 4/7/97. Statutory Authority: RCW 49.17.040, [49.17.]050 and [49.17.]060. 96-22-048, § 296-306A-28032, filed 10/31/96, effective 12/1/96.]

WAC 296-307-28034 What requirements apply to guarding keys, set screws, and other projections? (1) All projecting keys, set screws, and other projections in revolving parts must be removed, or made flush, or guarded by metal covers.

(2) Projections, such as exposed bolts, keys, or set screws that are part of sprockets, grooved pulleys or pulleys on stationary equipment must be shielded unless guarded by location.

Exception: This section does not apply to keys or set screws within gear or sprocket casings or other enclosures, nor to keys, set screws, or oilcups in hubs of pulleys less than 20 inches in diameter where they are within the plane of the rim of the pulley.

Note: We recommend that you not use projecting set screws or oilcups in any revolving pulley or part of machinery.

[97-09-013, recodified as § 296-307-28034, filed 4/7/97, effective 4/7/97. Statutory Authority: RCW 49.17.040, [49.17.]050 and [49.17.]060. 96-22-048, § 296-306A-28034, filed 10/31/96, effective 12/1/96.]

WAC 296-307-28036 What requirements apply to guarding collars and couplings? (1) All revolving collars, including split collars, must be cylindrical. Screws or bolts used in collars must not project beyond the largest periphery of the collar.

(2) Shaft couplings must be constructed to prevent hazard from bolts, nuts, set screws, or revolving surfaces. Bolts, nuts, and set screws are permitted where they are covered with safety sleeves or where they are used parallel with the shafting and are countersunk or where they do not extend beyond the flange of the coupling.

[97-09-013, recodified as § 296-307-28036, filed 4/7/97, effective 4/7/97. Statutory Authority: RCW 49.17.040, [49.17.]050 and [49.17.]060. 96-22-048, § 296-306A-28036, filed 10/31/96, effective 12/1/96.]

WAC 296-307-28038 Must self-lubricating bearings be used? We recommend that you use self-lubricating bearings. All drip cups and pans must be securely fastened.

[97-09-013, recodified as § 296-307-28038, filed 4/7/97, effective 4/7/97. Statutory Authority: RCW 49.17.040, [49.17.]050 and [49.17.]060. 96-22-048, § 296-306A-28038, filed 10/31/96, effective 12/1/96.]

WAC 296-307-28040 What requirements apply to guarding clutches, cutoff couplings, and clutch pulleys? (1) Unless guarded by location, clutches, cutoff couplings, or clutch pulleys with projecting parts must be enclosed by a stationary guard constructed according to WAC 296-307-28046. You may use a "U" type guard.

(2) In enginerooms, a guardrail, preferably with toeboard, may be used instead of the guard if the room is only occupied by engineroom attendants.

(3) A bearing support next to a friction clutch or cutoff coupling must have self-lubricating bearings that require infrequent maintenance.

[Statutory Authority: RCW 49.17.040. 98-24-096, § 296-307-28040, filed 12/1/98, effective 3/1/99. 97-09-013, recodified as § 296-307-28040, filed 4/7/97, effective 4/7/97. Statutory Authority: RCW 49.17.040, [49.17.]050 and [49.17.]060. 96-22-048, § 296-306A-28040, filed 10/31/96, effective 12/1/96.]

WAC 296-307-28042 What requirements apply to guarding belt shifters, clutches, shippers, poles, perches, and fasteners? "Belt pole" (sometimes called a "belt shipper" or "shipper pole") means a device used in shifting belts on and off fixed pulleys on line or countershaft where there are no loose pulleys.

(1) Tight and loose pulleys must have a permanent belt shifter with a mechanical means to prevent the belt from creeping from loose to tight pulley.

(2) Belt shifter and clutch handles must be rounded. They must be as far as possible from danger of accidental contact, but within easy reach of the operator. Where belt shifters are not directly over a machine or bench, the handles must be cut off 6 feet 6 inches above floor level.

(3) All belt and clutch shifters of the same type in each shop should move in the same direction to stop machines, i.e., either all right or all left.

Exception: This requirement does not apply to a friction clutch on a countershaft carrying two clutch pulleys with open and crossed belts. In this case the shifter handle has three positions and the machine is at a standstill when the clutch handle is in the neutral or center position.

(4) When belt poles must be used as a substitute for mechanical shifters, they must be big enough for employees to grasp them securely. Poles must be smooth and preferably of straight grain hardwood, such as ash or hickory. The edges of rectangular poles should be rounded. Poles should extend from the top of the pulley to within approximately 40 inches of the floor or working platform.

(5) Where loose pulleys or idlers are not practical, belt perches such as brackets, rollers, etc., must be used to keep idle belts away from the shafts. Perches should be substantial and designed for safe belt shifting.

(6) Belts that must be shifted by hand and belts within seven feet of the floor or working platform that are not guarded according to WAC 296-307-28046 must not be fastened with metal, nor with any other fastening that creates a hazard.

[Statutory Authority: RCW 49.17.040. 98-24-096, § 296-307-28042, filed 12/1/98, effective 3/1/99. 97-09-013, recodified as § 296-307-28042, filed 4/7/97, effective 4/7/97. Statutory Authority: RCW 49.17.040, [49.17.]050 and [49.17.]060. 96-22-048, § 296-306A-28042, filed 10/31/96, effective 12/1/96.]

WAC 296-307-28044 What materials must be used for standard guards? (1) Standard guards must be made of the following materials:

(a) Expanded metal;

(b) Perforated or solid sheet metal;

(c) Wire mesh on a frame of angle iron; or

(d) Iron pipe securely fastened to the floor or the frame of the machine.

(2) Wire mesh should have wires that are securely fastened at every cross point either by welding, soldering, or galvanizing.

Exception: Diamond or square wire mesh made of No. 14 gauge wire, 3/4-inch mesh or heavier is exempt from this requirement.

[97-09-013, recodified as § 296-307-28044, filed 4/7/97, effective 4/7/97. Statutory Authority: RCW 49.17.040, [49.17.]050 and [49.17.]060. 96-22-048, § 296-306A-28044, filed 10/31/96, effective 12/1/96.]

WAC 296-307-28046 How must standard guards be manufactured? (1) Guards must be free from burrs, sharp edges, and sharp corners.

(2) Expanded metal, sheet or perforated metal, and wire mesh must be securely fastened to the frame by one of the following methods:

(a) Rivets or bolts spaced not more than five inches center to center. In case of expanded metal or wire mesh, metal strips or clips must be used to form a washer for rivets or bolts.

(b) Welding to frame every four inches.

(c) Weaving through channel or angle frame, or, if No. 14 gauge 3/4-inch mesh or heavier is used, by bending entirely around rod frames.

(d) To fill openings in pipe railing with expanded metal, wire mesh, or sheet metal, make the filler material into panels with rolled edges or edges bound with "V" or "U" edging. The edging must be of at least No. 24 gauge sheet metal fastened to the panels with bolts or rivets spaced a maximum of 5 inches center to center. The bound panels must be fastened to the railing by sheet-metal clips spaced a maximum of 5 inches center to center.

(e) Diamond or square mesh made of crimped wire fastened into channels, angle iron, or round-iron frames may also be used as a filler in guards. Size of mesh must correspond to Table P-1.

(3) Where guard design requires filler material greater than 12 square feet, additional frame members must be provided to ensure that the panel area is a maximum of 12 square feet.

(4) All joints of framework must be as strong as the material of the frame.

[97-09-013, recodified as § 296-307-28046, filed 4/7/97, effective 4/7/97. Statutory Authority: RCW 49.17.040, [49.17.]050 and [49.17.]060. 96-22-048, § 296-306A-28046, filed 10/31/96, effective 12/1/96.]

WAC 296-307-28048 What requirements apply to disk, shield, and U-guards? (1) A disk guard must have a sheet-metal disk of at least No. 22 gauge fastened by U-bolts or rivets to the spokes of pulleys, flywheels, or gears. To prevent contact with sharp edges of the disk, the edge must be rolled or wired. In all cases, the nuts must have locknuts on the unexposed side of the wheel.

(2) A shield guard must have a frame filled in with wire mesh or expanded, perforated, or solid sheet metal.

(3) If the shield area is less than six square feet, the wire mesh or expanded metal may be fastened in a framework of 3/8-inch solid rod, 3/4-inch by 3/4-inch by 1/8-inch angle iron, or a metal construction of equivalent strength. Metal shields may have edges entirely rolled around a 3/8-inch solid iron rod.

(4) A U-guard consisting of a flat surface with edge members must cover the under surface and lower edge of a belt, multiple chain, or rope drive. It must be constructed of materials specified in Table P-1, and must meet the requirements of WAC 296-307-28054 through 296-307-28058. Edges must be smooth and, if the size of the guard requires, be reinforced by rolling, wiring, or by binding with angle or flat iron.

[Statutory Authority: RCW 49.17.040. 98-24-096, § 296-307-28048, filed 12/1/98, effective 3/1/99. 97-09-013, recodified as § 296-307-28048, filed 4/7/97, effective 4/7/97. Statutory Authority: RCW 49.17.040, [49.17.]050 and [49.17.]060. 96-22-048, § 296-306A-28048, filed 10/31/96, effective 12/1/96.]

WAC 296-307-28050 What materials must be used for guards? The materials and dimensions specified in this section apply to all guards. The materials and dimensions specified are minimum requirements. You may choose to provide stronger guards.

Exception: Horizontal overhead belts, rope, cable, or chain guards more than 7 feet above floor, or platform must meet the requirements outlined in Table P-2.

(1) The framework of all guards must have minimum dimensions of 1-inch by 1-inch by 1/8-inch for angle iron, 3/4-inch inside diameter for metal pipe, or metal construction of equivalent strength.

Exception: Guards thirty inches tall or less with a total surface area of ten square feet or less may have a framework of 3/8-inch solid rod, 3/4-inch by 3/4-inch by 1/8-inch angle iron, or metal construction of equivalent strength. The filling material must correspond to the requirements of Table 1.

(a) All guards must be rigidly braced every 3 feet of their height to some fixed part of machinery or building structure. Where a guard is exposed to contact with moving equipment additional strength may be necessary.

(b) The framework for all guards fastened to the floor or working platform and without other support or bracing must consist of 1-1/2-inch by 1-1/2-inch by 1/8-inch angle iron, metal pipe of 1-1/2-inch inside diameter, or metal construction of equivalent strength. All rectangular guards must have at least four upright frame members that extend to the floor and are securely fastened. Cylindrical guards must have at least three supporting members that extend to the floor.

(2) Where guards are exposed to unusual wear, deterioration, or impact, heavier material and construction should be used to protect against the specific hazards involved.

[97-09-013, recodified as § 296-307-28050, filed 4/7/97, effective 4/7/97. Statutory Authority: RCW 49.17.040, [49.17.]050 and [49.17.]060. 96-22-048, § 296-306A-28050, filed 10/31/96, effective 12/1/96.]

WAC 296-307-28052 When may wood guards be used? Wood guards may be used where fumes would cause rapid deterioration of metal guards and outdoors where extreme cold or extreme heat make metal guards and railings undesirable.

(1) Wood must be sound, tough, and without loose knots.

(2) Guards must be made of planed lumber not less than 1-inch rough board measure, with rounded edges and corners.

(3) Wood guards must be securely fastened together with wood screws, hardwood dowel pins, bolts, or rivets.

(4) Wood guards must be equal in strength and rigidity to metal guards specified in WAC 296-307-28050 and Table P-1.

Note: Requirements for the construction of standard wood railings are in WAC 296-307-28060.

[Statutory Authority: RCW 49.17.040. 98-24-096, § 296-307-28052, filed 12/1/98, effective 3/1/99. 97-09-013, recodified as § 296-307-28052, filed 4/7/97, effective 4/7/97. Statutory Authority: RCW 49.17.040, [49.17.]050 and [49.17.]060. 96-22-048, § 296-306A-28052, filed 10/31/96, effective 12/1/96.]

WAC 296-307-28054 What materials may be used for guarding horizontal overhead belts? (1) Guards for horizontal overhead belts must run the entire length of the belt and follow the line of the pulley to the ceiling or extend to the nearest wall.

Exception: Where belts are located so that it is impractical to extend the guard to wall or ceiling, the guard must completely enclose the top and bottom runs of the belt and the face of pulleys.

(2) The guard and its supporting parts must be securely fastened to the wall or ceiling by gimlet-point lag screws or through bolts. In masonry, expansion bolts must be used. We recommend using bolts placed horizontally through floor beams or ceiling rafters.

(3) When necessary, suitable reinforcement must be provided for the ceiling rafters or overhead floor beams to sustain safely the weight and stress imposed by the guard.

(4) The interior surface of all guards must be smooth and free from projections.

Exception: Where construction demands it, protruding shallow round-head rivets may be used.

[97-09-013, recodified as § 296-307-28054, filed 4/7/97, effective 4/7/97. Statutory Authority: RCW 49.17.040, [49.17.]050 and [49.17.]060. 96-22-048, § 296-306A-28054, filed 10/31/96, effective 12/1/96.]

WAC 296-307-28056 What clearance must be maintained between guards and power transmission machinery? (1) Overhead belt guards must be at least one-quarter wider than the belt they protect, with a maximum clearance of 6 inches on each side. Overhead rope-drive and block and roller-chain-drive guards must be at least six inches wider than the drive on each side.

(2) Overhead silent chain-drive guards with the chain held on sprockets must have side clearance of:

(a) On drives of 20-inch centers or less, at least 1/4-inch from the nearest moving chain part, and

(b) On drives of over 20-inch centers, a minimum of 1/2-inch from the nearest moving chain part.

(3) Table 2 gives the sizes of materials and construction specifications for guards for belts that are 10 inches wide or more. All materials for overhead belt guards must be at least the size specified in Table 2 for belts 10 to 14 inches wide, even if the overhead belt is less than 10 inches wide. However, No. 20 gauge sheet metal may be used as a filler on guards for belts less than 10 inches wide. Expanded metal, because of the sharp edges, should not be used as a filler in horizontal belt guards.

(4) For clearance between guards and belts, ropes, or chains see Table P-2.

[97-09-013, recodified as § 296-307-28056, filed 4/7/97, effective 4/7/97. Statutory Authority: RCW 49.17.040, [49.17.]050 and [49.17.]060. 96-22-048, § 296-306A-28056, filed 10/31/96, effective 12/1/96.]

WAC 296-307-28058 How must overhead rope and chain-drive guards be constructed? (1) Overhead-rope and chain-drive guard construction must meet the requirements for overhead-belt guard construction of similar width.

Exception: The filler material must be solid, according to Table P-2, unless fire hazard demands the use of open construction.

(2) A side guard member of the same solid filling material should extend 2 inches above the level of the lower run of the rope or chain drive and 2 inches within the periphery of the pulleys that the guard encloses, forming a trough.

(3) The side filler members should be reinforced on the edges with 1-1/2-inch by 1/4-inch flat steel, riveted to the filling material at 8 inch centers or less. The reinforcing strip should be fastened or bolted to all guard supporting members with at least one 3/8-inch rivet or bolt at each intersection, and the ends should be secured to the ceiling with lag screws or bolts.

(4) The filling material must be fastened to the framework of the guard and the filler supports by 3/16-inch rivets spaced on 4-inch centers. Measure the width of a multiple drive from the outside of the first to the outside of the last rope or chain in the group accommodated by the pulley.

[97-09-013, recodified as § 296-307-28058, filed 4/7/97, effective 4/7/97. Statutory Authority: RCW 49.17.040, [49.17.]050 and [49.17.]060. 96-22-048, § 296-306A-28058, filed 10/31/96, effective 12/1/96.]

WAC 296-307-28060 What materials must be used for guardrails and toeboards? (1) A guardrail used to guard power transmission parts must be 42 inches tall, with a mid-rail between the top rail and the floor.

(2) Posts must be 8 feet apart or less. They must be permanent and substantial, smooth, and free from protruding nails, bolts, and splinters. If made of pipe, the post must be at least 1-1/4 inches inside diameter. If posts are made of metal shapes or bars, the section must be as strong as posts made of 1-1/2 by 1-1/2 by 3/16-inch angle iron. If posts are made of wood, the posts must be at least 2 by 4 inches. The upper rail must be 2 by 4 inches, or two 1 by 4 inch strips, one at the top and one at the side of the posts. The midrail must be at least 1 by 4 inches.

(3) The rails (metal shapes, metal bars, or wood), should be on the side of the posts that gives the best protection and support. Where panels are fitted with expanded metal or wire mesh (as noted in Table 1) the middle rails may be omitted. Where guard is exposed to contact with moving equipment, additional strength may be necessary.

(4) Toeboards must be at least 4 inches tall, of wood, metal, or metal grill of a maximum 1-inch mesh. Toeboards at flywheel pits should be placed as close to edge of the pit as possible.

Table P-1
TABLE OF STANDARD MATERIALS AND DIMENSIONS

Material	Clearance from moving part at all points (inches)	Largest mesh or opening allowable (inches)	Minimum gauge (U.S. Standard) or thickness (inches)	Minimum height of guard from floor or platform level (feet)
Woven wire	Under 2	3/8	No. 16	7
	2-4	1/2	No. 16	7
	Under 4	1/2	No. 16	7
	4-15	2	No. 12	7
Expanded metal	Under 4	1/2	No. 18	7
	4-15	2	No. 13	7
Perforated metal	Under 4	1/2	No. 20	7
	4-15	2	No. 14	7
Sheet metal	Under 4		No. 22	7
	4-15		No. 22	7
Wood or metal strip crossed	Under 4	3/8	Wood 3/4 Metal No. 16	7
	4-15	2	Wood 3/4 Metal No. 16	7
Wood or metal strip not crossed	Under 4	1/2 width	Wood 3/4 Metal No. 16	7
	4-15	1 width	Wood 3/4 Metal No. 16	7
Standard rail	Min. 15 Max. 20			

Table P-2
HORIZONTAL OVERHEAD BELTS, ROPES, AND CHAINS
7 FEET OR MORE ABOVE FLOOR OR PLATFORM

	Width 0"-14" inclusive	Material
MEMBERS		
Framework	1 1/2" x 1 1/2" x 1/4"	Angle iron
Filler (belt guards)	1 1/2" x 3/16"	Flat iron
Filler and vertical side member	No. 20 A.W.G.	Solid sheet metal
Filler supports	2" x 5/16" flat iron	Flat and angle
Guard supports	2" x 5/16"	Flat iron
FASTENINGS		
Filler supports to framework	(2) 3/16"	Rivets
Filler flats to supports (belt guards)	(1) 5/16"	Flush rivets
Filler to frame and supports (chain guards)	3/16"	Rivets spaced
Guard supports to framework	(2) 3/6"	Rivets or bolts
Guard and supports to overheard ceiling	1/4" x 3 1/2" lag screws or 1/2" bolts	Lag screws or bolts

DETAILS-SPACING, ETC.		
Width of guards	One-quarter wider than belt, rope, or chain drive	
Spacing between filler supports	20" center to center	
Spacing between filler flats (belt guards)	2" apart	
Spacing between guard supports	36" center to center	
OTHER BELT GUARD FILLING PERMITTED		
Sheet metal fastened as in chain guards	No. 20 A.W.G.	Solid or perforated
Woven Wire, 2" mesh	No. 12 A.W.G.	
CLEARANCE FROM OUTSIDE OF BELT, ROPE, OR CHAIN DRIVE TO GUARD		
Distance center to center of shafts	Up to 15' inclusive	Over 40'
Clearance from belt, or chain to guard	16"	120"

	Width over 14" to 24" inclusive	Material
MEMBERS		
Framework	2" x 2" x 5/16"	Angle iron
Filler (belt guards)	2" x 3/16"	Flat iron

Filler and vertical side member	No. 18 A.W.G.	Solid sheet metal
Filler supports	2" x 3/8" flat iron	Flat and angle
Guard supports	2" x 3/8"	Flat iron
FASTENINGS		
Filler supports to framework	(2) 3/6"	Rivets
Filler flats to supports (belt guards)	(1) 5/16"	Flush rivets
Filler to frame and supports (chain guards)	8" centers on sides and 4" centers on bottom	
Guard supports to framework	(2) 7/16"	Rivets or bolts
Guard and supports to overheard ceiling	5/8" x 4" lag screws or 5/8" bolts	Lag screws or bolts
DETAILS-SPACING, ETC.		
Width of guards		
Spacing between filler supports	16" C. to C	
Spacing between filler flats (belt guards)	2 1/2" apart	
Spacing between guard supports	36" C. to C	
OTHER BELT GUARD FILLING PERMITTED		
Sheet metal fastened as in chain guards	No. 18 A.W.G.	Solid or perforated
Woven wire, 2" mesh	No. 10 A.W.G.	
CLEARANCE FROM OUTSIDE OF BELT, ROPE, OR CHAIN DRIVE TO GUARD		
Distance center to center of shafts	Over 15' to 25'	Over 40' inclusive
Clearance from belt/chain to guard	10"	20"

	Width over 24"	Material
MEMBERS		
Framework	3" x 3" x 3/8"	Angle iron
Filler (belt guards)	2" x 5/16"	Flat iron
Filler and vertical side member	No. A.W.G.	Solid sheet metal
Filler supports	2 1/2" x 2 1/2" x 1/4" angle	Flat and angle
Guard supports	2 1/2" x 3/8"	Flat iron
FASTENINGS		
Filler supports to framework	(3) 1/2"	Rivets
Filler flats to supports (belt guards)	(2) 3/8"	Flush rivets
Filler to frame and supports (chain guards)		
Guard supports to frame work	(2) 5/8"	Rivets or bolts
Guard and supports to overhead ceiling	3/4" x 6" lag screws or 3/4" bolt	Lag screws or bolts
DETAILS-SPACING, ETC.		
Width of guards		
Spacing between filler supports	16" C. to C.	
Spacing between filler flats (belt guards)	4" apart	
Spacing between guard supports	36" C. to C.	
OTHER BELT GUARD FILLING PERMITTED		
Sheet metal fastened as in chain guards	No. 18 A.W.G.	Solid or perforated
Woven wire, 2" mesh	No. 8 A.W.G.	
CLEARANCE FROM OUTSIDE OF BELT, ROPE, OR CHAIN DRIVE TO GUARD		
Distance center to center of shafts	Over 25' to 40' inclusive	Over 40'
Clearance from belt, or chain to guard	15"	20"

[Statutory Authority: RCW 49.17.040. 98-24-096, § 296-307-28060, filed 12/1/98, effective 3/1/99. 97-09-013, recodified as § 296-307-28060, filed 4/7/97, effective 4/7/97. Statutory Authority: RCW 49.17.040, [49.17.]050 and [49.17.]060. 96-22-048, § 296-306A-28060, filed 10/31/96, effective 12/1/96.]

WAC 296-307-28062 How must shafting be maintained? (1) Shafting must be kept in alignment, and free from rust and excess oil or grease.

(2) Where explosives, explosive dusts, flammable vapors or flammable liquids exist, guards must take into account the hazard of static sparks from shafting.

[97-09-013, recodified as § 296-307-28062, filed 4/7/97, effective 4/7/97. Statutory Authority: RCW 49.17.040, [49.17.]050 and [49.17.]060. 96-22-048, § 296-306A-28062, filed 10/31/96, effective 12/1/96.]

WAC 296-307-28064 How must pulleys be maintained? (1) Pulleys must be kept in proper alignment to prevent belts from running off.

(2) Any pulley carrying a nonshifting belt should have a crowned face.

(3) Cast-iron pulleys should be tested frequently with a hammer to detect cracks in rim or spokes. The sound is different depending on whether the belt is or is not on the pulley.

(4) Split pulleys should be inspected to be sure that all bolts holding together the sections of the pulley are tight.

[97-09-013, recodified as § 296-307-28064, filed 4/7/97, effective 4/7/97. Statutory Authority: RCW 49.17.040, [49.17.]050 and [49.17.]060. 96-22-048, § 296-306A-28064, filed 10/31/96, effective 12/1/96.]

WAC 296-307-28066 How must belts be maintained? (1) Quarter-twist belts without an idler can be used on drives running in one direction only. They will run off a pulley when direction is reversed.

(2) You must inspect belts, lacings, and fasteners to be sure they are kept in good repair.

(3) Dressing should not be applied when the belt or rope is in motion; but, when necessary, it should be applied where belts or rope leave the pulley, not where they approach. The same precautions apply to lubricating chains. In the case of V-belts, belt dressing is neither necessary nor advisable.

[97-09-013, recodified as § 296-307-28066, filed 4/7/97, effective 4/7/97. Statutory Authority: RCW 49.17.040, [49.17.]050 and [49.17.]060. 96-22-048, § 296-306A-28066, filed 10/31/96, effective 12/1/96.]

WAC 296-307-28068 How must other equipment be maintained? (1) You must inspect all power-transmission equipment at least every 60 days and ensure that it is kept in good working condition at all times.

(2) Bearings must be kept in alignment and properly adjusted.

(3) Hangers must be inspected to ensure that all supporting bolts and screws are tight and that supports of hanger boxes are adjusted properly.

(4) The oilers must wear tightfitting clothing and should use cans with long spouts to keep their hands out of danger. Machinery must be oiled when not in motion, wherever possible.

[97-09-013, recodified as § 296-307-28068, filed 4/7/97, effective 4/7/97. Statutory Authority: RCW 49.17.040, [49.17.]050 and [49.17.]060. 96-22-048, § 296-306A-28068, filed 10/31/96, effective 12/1/96.]

WAC 296-307-290 Auger conveying equipment.

[97-09-013, recodified as § 296-307-290, filed 4/7/97, effective 4/7/97. Statutory Authority: RCW 49.17.040, [49.17.]050 and [49.17.]060. 96-22-048, § 296-306A-290, filed 10/31/96, effective 12/1/96.]

WAC 296-307-29005 What requirements apply to auger conveying equipment? "Augers" means screw conveyors and related accessories designed primarily for conveying agricultural materials on farms.

(1) Power take-off shafts must be guarded according to WAC 296-307-28046.

(2) All augers must be covered or guarded when exposed to contact.

(3) You must ensure that each sweep auger has its top half shielded by a guard. All guard openings must be no larger than 4 3/4 inches across.

(4) You must ensure that the exposed auger at the hopper and the intake is guarded or designed to prevent accidental contact with the rotating inlet area. The guard must extend at least 2 1/2 inches above and below the exposed auger. Openings in the guard, for the free flow of material, must be no larger than 4 3/4 inches across and must be strong enough to support 250 pounds at mid span.

(5) The hand raising winch must have a control that will hold the auger at any angle, and that will only respond to the control. You must ensure that the operator is able to lower the auger without disengaging the control. The maximum force required on the handle to raise or lower the auger manually must be 50 pounds.

(6) The wire rope lifting pulleys must be grooved to fit the wire rope used.

(7) In order to avoid separation, you must provide a positive restraint between the auger tube and the under-carriage lifting arm. You must provide stops that restrict the maximum raised angle and minimum lowered angle.

(8) Wire ropes (cables) must be rust resistant and selected for the design load and service intended.

(9) You must provide the auger operator with service and operation instructions that include safe operation and servicing practices.

[Statutory Authority: RCW 49.17.040. 98-24-096, § 296-307-29005, filed 12/1/98, effective 3/1/99. 97-09-013, recodified as § 296-307-29005, filed 4/7/97, effective 4/7/97. Statutory Authority: RCW 49.17.040, [49.17.]050 and [49.17.]060. 96-22-048, § 296-306A-29005, filed 10/31/96, effective 12/1/96.]

WAC 296-307-29010 What other requirements apply to auger conveying equipment manufactured after October 25, 1976? You must ensure that auger conveying equipment manufactured after October 25, 1976, is guarded as follows:

(1) Sweep-arm material-gathering mechanisms used on the top surface of materials within silo structures are guarded. The lower or leading edge of the guard is no more than 12 inches above the material surface and no less than 6 inches in front of the leading edge of the rotating member of the gathering mechanism. The guard is parallel to and extends the fullest practical length of the material gathering mechanism.

(2) Exposed auger flighting on portable grain augers is guarded with either grating type guards or solid baffle style covers as follows:

(a) The largest dimensions or openings in grating type guards through which materials flow is 4-3/4 inches. The opening area is a maximum of 10 square inches. The opening is least 2-1/2 inches from the rotating flighting.

(b) Slotted openings in solid baffle style covers are a maximum of 1-1/2 inches wide, or less than 3-1/2 inches from the exposed flighting.

[97-09-013, recodified as § 296-307-29010, filed 4/7/97, effective 4/7/97. Statutory Authority: RCW 49.17.040, [49.17.]050 and [49.17.]060. 96-22-048, § 296-306A-29010, filed 10/31/96, effective 12/1/96.]

WAC 296-307-300 Guarding farmstead equipment.

[97-09-013, recodified as § 296-307-300, filed 4/7/97, effective 4/7/97. Statutory Authority: RCW 49.17.040, [49.17.]050 and [49.17.]060. 96-22-048, § 296-306A-300, filed 10/31/96, effective 12/1/96.]

WAC 296-307-30003 What does this section cover? WAC 296-307-300 applies to the guarding and care of farmstead equipment.

"Farmstead equipment" means agricultural equipment normally used in a stationary manner. This includes, but is not limited to, materials handling equipment and accessories for such equipment whether or not the equipment is an integral part of a building.

[Statutory Authority: RCW 49.17.040. 98-24-096, § 296-307-30003, filed 12/1/98, effective 3/1/99. 97-09-013, recodified as § 296-307-30003, filed 4/7/97, effective 4/7/97. Statutory Authority: RCW 49.17.040, [49.17.]050

and [49.17.]060. 96-22-048, § 296-306A-30003, filed 10/31/96, effective 12/1/96.]

WAC 296-307-30006 How must power takeoff shafts of farmstead equipment be guarded? (1) You must ensure that all power takeoff shafts, including rear-mounted, mid-mounted or side-mounted shafts, are guarded either by a master shield or by other protective guarding. The master shield must be strong enough to prevent damaging the shield when a 250-pound operator mounts or dismounts the tractor using the shield as a step.

(2) Power takeoff driven equipment must be guarded to prevent employee contact with rotating parts of the power drive system. Where power takeoff driven equipment requires removal of the tractor master shield, the equipment must also include protection from any portion of the tractor power takeoff shaft that protrudes from the tractor.

(3) Signs must be placed at prominent locations on power takeoff driven equipment specifying that power drive system safety shields must be kept in place.

[97-09-013, recodified as § 296-307-30006, filed 4/7/97, effective 4/7/97. Statutory Authority: RCW 49.17.040, [49.17.]050 and [49.17.]060. 96-22-048, § 296-306A-30006, filed 10/31/96, effective 12/1/96.]

WAC 296-307-30009 How must other power transmission components of farmstead equipment be guarded? (1) All power transmission parts must be guarded according to WAC 296-307-280.

(2) Smooth shafts and shaft ends (without any projecting bolts, keys, or set screws) may be unguarded if they:

(a) Revolve at less than 10 RPM; and

(b) Are part of feed handling equipment used on the top surface of materials in bulk storage facilities.

[Statutory Authority: RCW 49.17.040. 98-24-096, § 296-307-30009, filed 12/1/98, effective 3/1/99. 97-09-013, recodified as § 296-307-30009, filed 4/7/97, effective 4/7/97. Statutory Authority: RCW 49.17.040, [49.17.]050 and [49.17.]060. 96-22-048, § 296-306A-30009, filed 10/31/96, effective 12/1/96.]

WAC 296-307-30012 How must functional components of farmstead equipment be guarded? The following functional components must be shielded to a degree consistent with the intended function and operator's vision of the component:

- Snapping or husking rolls;
- Straw spreaders and choppers;
- Cutterbars;
- Flail rotors;
- Rotary beaters;
- Mixing augers;
- Feed rolls;
- Rotary tillers; and
- Similar units that must be exposed for proper function.

[97-09-013, recodified as § 296-307-30012, filed 4/7/97, effective 4/7/97. Statutory Authority: RCW 49.17.040, [49.17.]050 and [49.17.]060. 96-22-048, § 296-306A-30012, filed 10/31/96, effective 12/1/96.]

WAC 296-307-30015 When may guards be removed on farmstead equipment? (1) Guards, shields and access doors must be in place when the equipment is in operation.

(2) Where removal of a guard or access door will expose an employee to any component that continues to rotate after the power is disengaged, you must provide in the immediate area, a safety sign warning the employee:

(a) To look and listen for evidence of rotation; and

(b) To refrain from removing the guard or access door until all components have stopped.

(3) On equipment manufactured after October 25, 1976, a readily visible or audible warning of rotation is required.

[97-09-013, recodified as § 296-307-30015, filed 4/7/97, effective 4/7/97. Statutory Authority: RCW 49.17.040, [49.17.]050 and [49.17.]060. 96-22-048, § 296-306A-30015, filed 10/31/96, effective 12/1/96.]

WAC 296-307-30018 What requirements apply to electrical control for maintaining and servicing farmstead equipment? (1) You must ensure that only the employee maintaining or servicing equipment has control of the electrical power source by:

(a) Providing an exclusive, positive locking means on the main switch that can be operated only by the employee performing the maintenance or service; or

(b) For material handling equipment in a bulk storage structure, by providing on the equipment an electrical or mechanical means to disconnect the power. Minimum lockout means must meet the requirements of WAC 296-307-320.

(2) All circuit protection devices, including those that are an integral part of a motor, must have a manual reset, except where:

(a) A manual reset is infeasible because of the nature of the operation, distances involved, and the amount of time normally spent by employees in the area of the affected equipment;

(b) An electrical disconnect switch is available to the employee within fifteen feet of the equipment being maintained or serviced; and

(c) A sign, prominently posted near each hazardous component, warns the employee that unless the electrical disconnect switch is utilized, the motor could automatically reset while the employee is working on the hazardous component.

[Statutory Authority: RCW 49.17.040. 98-24-096, § 296-307-30018, filed 12/1/98, effective 3/1/99. 97-09-013, recodified as § 296-307-30018, filed 4/7/97, effective 4/7/97. Statutory Authority: RCW 49.17.040, [49.17.]050 and [49.17.]060. 96-22-048, § 296-306A-30018, filed 10/31/96, effective 12/1/96.]

WAC 296-307-30021 What additional guarding requirements apply to farmstead equipment? (1) You must ensure that carton or bag stitching machines are properly safeguarded to prevent anyone from coming in contact with the stitching head and other pinch or nip points.

(2) The point of operation of all machines must be guarded. The guard must be designed and constructed to prevent the operator from having any part of the body in the danger zone during the operating cycle.

Note: The distance from the point-of-operation guards to the danger line depends on the size of the opening. The required distances are outlined in the table below:

Guarding line or distance of opening from point of operation hazard (inches)	Maximum width of opening (inches)
1/2 to 1 1/2	1/4
1 1/2 to 2 1/2	3/8

Guarding line or distance of opening from point of operation hazard (inches)	Maximum width of opening (inches)
2 1/2 to 3 1/2	1/2
3 1/2 to 5 1/2	5/8
5 1/2 to 6 1/2	3/4
6 1/2 to 7 1/2	7/8
7 1/2 to 12 1/2	1 1/4
12 1/2 to 15 1/2	1 1/2
15 1/2 to 17 1/2	1 7/8
17 1/2 to 31 1/2	2 1/8

[97-09-013, recodified as § 296-307-30021, filed 4/7/97, effective 4/7/97. Statutory Authority: RCW 49.17.040, [49.17.]050 and [49.17.]060. 96-22-048, § 296-306A-30021, filed 10/31/96, effective 12/1/96.]

Part Q
Control of Hazardous Energy (Lockout-tagout)

WAC 296-307-320 Control of hazardous energy (lockout-tagout).

[97-09-013, recodified as § 296-307-320, filed 4/7/97, effective 4/7/97. Statutory Authority: RCW 49.17.040, [49.17.]050 and [49.17.]060. 96-22-048, § 296-306A-320, filed 10/31/96, effective 12/1/96.]

WAC 296-307-32001 What does this section cover? (1) WAC 296-307-320 covers the servicing and maintenance of machines and equipment in which the unexpected start up of the machine or equipment or release of stored energy could cause injury to employees. This standard establishes minimum performance requirements for the control of such hazardous energy.

(2) Normal production operations are not covered by this standard. Servicing and/or maintenance that takes place during normal production operations is covered by this standard only if:

(a) An employee is required to remove or bypass a guard or other safety device; or

(b) An employee is required to place a body part into a point of operation or where an associated danger zone exists during a machine operating cycle.

Exception: Minor servicing activities, that take place during normal production operations, are not covered by this standard if they are routine, repetitive, and integral to the use of the equipment for production, provided that the work is performed using alternative measures that provide effective protection.

[Statutory Authority: RCW 49.17.040. 98-24-096, § 296-307-32001, filed 12/1/98, effective 3/1/99. 97-09-013, recodified as § 296-307-32001, filed 4/7/97, effective 4/7/97. Statutory Authority: RCW 49.17.040, [49.17.]050 and [49.17.]060. 97-08-051A, § 296-306A-32001, filed 3/31/97, effective 5/1/97; 96-22-048, § 296-306A-32001, filed 10/31/96, effective 12/1/96.]

WAC 296-307-32003 When does this section not apply? (1) WAC 296-307-320 does not apply to work on cord and plug connected electric equipment when:

(a) Unexpected energization or start up of the equipment is controlled by unplugging the equipment from the energy source; and

(b) The plug is under the exclusive control of the employee performing the servicing or maintenance.

(2) WAC 296-307-320 does not apply to hot tap operations involving transmission and distribution systems for substances such as gas, steam, water, or petroleum products when they are performed on pressurized pipelines, when:

(a) Continuity of service is essential;

(b) Shutdown of the system is impractical; and

(c) Documented procedures are followed, and special equipment is used that will provide proven effective protection for employees.

(3) WAC 296-307-320 does not cover exposure to electrical hazards from work on, near, or with conductors or equipment in electric utilization installations. These hazards are covered in chapter 296-307 WAC Part T.

[Statutory Authority: RCW 49.17.040. 98-24-096, § 296-307-32003, filed 12/1/98, effective 3/1/99. 97-09-013, recodified as § 296-307-32003, filed 4/7/97, effective 4/7/97. Statutory Authority: RCW 49.17.040, [49.17.]050 and [49.17.]060. 96-22-048, § 296-306A-32003, filed 10/31/96, effective 12/1/96.]

WAC 296-307-32005 What definitions apply to this section? "Affected employee" means an employee who uses a machine or equipment while it is serviced or maintained under lockout or tagout, or who works where such servicing or maintenance is being performed.

"Authorized employee" means a person who locks out or tags out machines or equipment in order to perform servicing or maintenance on that machine or equipment. An affected employee becomes an authorized employee when that employee's duties include performing servicing or maintenance covered under this part.

"Capable of being locked out" means an energy isolating device that has a hasp or other means for a lock to be affixed, or has a locking mechanism built into it. It also means that the device can be locked out without dismantling, rebuilding, or replacing the energy isolating device or permanently altering its energy control capability.

"Energized" means connected to an energy source or containing residual or stored energy.

"Energy isolating device" means a mechanical device that physically prevents the transmission or release of energy, including but not limited to the following:

- A manually operated electrical circuit breaker;
- A disconnect switch;
- A manually operated switch with conductors of circuit that can be disconnected from all ungrounded supply conductors and allows no pole to operate independently;
- A line valve;
- A block; and
- Any similar device used to block or isolate energy.

Push buttons, selector switches, and other control circuit devices are not energy isolating devices.

"Energy source" means any source of electrical, mechanical, hydraulic, pneumatic, chemical, thermal, or other energy, including gravity.

"Hot tap" means a procedure used in repair, maintenance, and service activities that involves welding on a piece of equipment (pipelines, vessels, or tanks) under pressure, in order to install connections or accessories. It is commonly used to replace or add sections of pipeline without the interruption of service for air, gas, water, steam, and petrochemical distribution systems.

"Lockout" means placing a lockout device on an energy isolating device, in accordance with an established proce-

dure, to ensure that the energy isolating device and the equipment being controlled cannot be operated until the lockout device is removed.

"Lockout device" means a device with a positive means such as a lock (key or combination type) to hold an energy isolating device in the safe position and prevents the energizing of a machine or equipment. Blank flanges and bolted slip blinds are included.

"Normal production operations" means using a machine or equipment for its intended production function.

"Servicing and/or maintenance" means workplace activities such as constructing, installing, setting up, adjusting, inspecting, modifying, and maintaining and/or servicing machines or equipment. These activities include lubrication, cleaning, or unjamming of machines or equipment and making adjustments or tool changes, where the employee may be exposed to the unexpected energization or start up of the equipment or release of hazardous energy.

"Setting up" means any work performed to prepare a machine or equipment to perform its normal production operation.

"Tagout" means placing a tagout device on an energy isolating device, according to an established procedure, to indicate that the energy isolating device and the equipment being controlled must not be operated until the tagout device is removed.

"Tagout device" means a prominent warning device, such as a tag and attachment, that can be securely fastened to an energy isolating device according to an established procedure, to indicate that the energy isolating device and the equipment being controlled must not be operated until the tagout device is removed.

[97-09-013, recodified as § 296-307-32005, filed 4/7/97, effective 4/7/97. Statutory Authority: RCW 49.17.040, [49.17.]050 and [49.17.]060. 96-22-048, § 296-306A-32005, filed 10/31/96, effective 12/1/96.]

WAC 296-307-32007 What are the required elements of an energy control program? You must establish a written energy control program consisting of:

- An energy control procedure;
- Employee training; and
- Periodic inspections.

The purpose of the program is to ensure that before any employee services or maintains a machine or equipment where the unexpected energizing, start up, or release of stored energy could occur and cause injury, the machine or equipment is isolated from the energy source, and rendered inoperative.

[97-09-013, recodified as § 296-307-32007, filed 4/7/97, effective 4/7/97. Statutory Authority: RCW 49.17.040, [49.17.]050 and [49.17.]060. 96-22-048, § 296-306A-32007, filed 10/31/96, effective 12/1/96.]

WAC 296-307-32009 How does an employer determine when to use lockout vs. tagout? (1) If an energy isolating device is not capable of being locked out, your energy control program must use a tagout system.

(2) If an energy isolating device is capable of being locked out, your energy control program must use lockout unless a tagout system will provide full employee protection according to WAC 296-307-32011.

(3) Whenever major replacement or major repair, renovation, or modification of a machine or equipment is performed, and whenever new machines or equipment are installed, energy isolating devices for such machines or equipment must be designed to accept a lockout device.

[Statutory Authority: RCW 49.17.040. 98-24-096, § 296-307-32009, filed 12/1/98, effective 3/1/99. 97-09-013, recodified as § 296-307-32009, filed 4/7/97, effective 4/7/97. Statutory Authority: RCW 49.17.040, [49.17.]050 and [49.17.]060. 96-22-048, § 296-306A-32009, filed 10/31/96, effective 12/1/96.]

WAC 296-307-32011 What requirements must be met to substitute tagout for lockout? (1) You must ensure that when a tagout device is used on an energy isolating device that is capable of being locked out, the tagout device is attached at the same location that the lockout device would have been attached. You must also ensure that the tagout program will provide safety that is equivalent to a lockout program.

(2) To demonstrate that a tagout program provides safety that is equivalent to a lockout program, you must demonstrate full compliance with all tagout requirements and any other measures necessary to provide equivalent safety. Other measures include:

(a) Implementing additional safety measures such as the removal of an isolating circuit element;

(b) Blocking a controlling switch;

(c) Opening an extra disconnecting device; or

(d) Removing a valve handle to reduce the likelihood of inadvertent energization.

[97-09-013, recodified as § 296-307-32011, filed 4/7/97, effective 4/7/97. Statutory Authority: RCW 49.17.040, [49.17.]050 and [49.17.]060. 96-22-048, § 296-306A-32011, filed 10/31/96, effective 12/1/96.]

WAC 296-307-32013 What are the required elements of energy control procedures? (1) You must develop, document, and use procedures to control potentially hazardous energy when employees are engaged in activities covered by this section.

Exception: You are exempt from documenting procedures for a particular machine or equipment only when all of the following elements exist:
(a) The machine or equipment has no potential for stored or residual energy or reaccumulation of stored energy after shut down that could endanger employees;
(b) The machine or equipment has a single energy source that can be readily identified and isolated;
(c) The isolation and locking out of that energy source will completely deenergize and deactivate the machine or equipment;
(d) The machine or equipment is isolated from that energy source and locked out during servicing or maintenance;
(e) A single lockout device will achieve lockout;
(f) The lockout device is under the exclusive control of the authorized employee performing the servicing or maintenance;
(g) The servicing or maintenance does not create hazards for other employees; and
(h) The worksite has experienced no accidents involving the unexpected activation or reenergization of the machine or equipment during servicing or maintenance.

(2) The procedures must clearly and specifically outline the scope, purpose, authorization, rules, and techniques for the control of hazardous energy, and the means to enforce compliance including, but not limited to, the following:

(a) A specific statement of the intended use of the procedure;

(b) Specific procedural steps for shutting down, isolating, blocking, and securing machines or equipment to control hazardous energy;

(c) Specific procedural steps for the placement, removal, and transfer of lockout devices or tagout devices and the responsibility for them; and

(d) Specific requirements for testing a machine or equipment to determine and verify the effectiveness of lockout devices, tagout devices, and other energy control measures.

[97-09-013, recodified as § 296-307-32013, filed 4/7/97, effective 4/7/97. Statutory Authority: RCW 49.17.040, [49.17.]050 and [49.17.]060. 96-22-048, § 296-306A-32013, filed 10/31/96, effective 12/1/96.]

WAC 296-307-32015 What requirements apply to lockout and tagout devices and materials? (1) You must provide locks, tags, chains, wedges, key blocks, adapter pins, self-locking fasteners, or other hardware for isolating, securing, or blocking machines or equipment from energy sources.

(2) Lockout and tagout devices must be singularly identified; must be the only device(s) used for controlling energy; must not be used for other purposes.

(3) Lockout and tagout devices must be durable and meet the following requirements:

(a) Lockout and tagout devices must be able to withstand the environment to which they are exposed for the maximum period of time that exposure is expected.

(b) Tagout devices must be constructed and printed so that exposure to weather conditions or wet and damp locations will not deteriorate the tag or make the tag's message illegible.

(c) Tags must not deteriorate when used in corrosive environments such as areas where acid and alkali chemicals are handled and stored.

(4) Lockout and tagout devices must be the same within the facility in at least color, shape, or size. Also, tagout devices must have the same print and format.

(5) Lockout and tagout devices must be substantial and meet the following requirements:

(a) Lockout devices must be substantial enough to prevent removal without the use of excessive force or unusual techniques, such as with the use of bolt cutters or other metal cutting tools.

(b) Tagout devices and their means of attachment must be substantial enough to prevent accidental removal. Tagout device attachment means must be single-use, attachable by hand, self-locking, releasable with an unlocking strength of at least 50 pounds, and having the general design and basic characteristics of being at least equivalent to a one-piece, all-environment-tolerant nylon cable tie.

(c) Lockout and tagout devices must indicate the name of employee applying the device(s).

(6) Tagout devices must warn against hazardous conditions if the machine or equipment is energized and must include a message such as: "Do not start," "do not open," "do not close," "do not energize," "do not operate."

[97-09-013, recodified as § 296-307-32015, filed 4/7/97, effective 4/7/97. Statutory Authority: RCW 49.17.040, [49.17.]050 and [49.17.]060. 96-22-048, § 296-306A-32015, filed 10/31/96, effective 12/1/96.]

WAC 296-307-32017 How often must the energy control procedure be inspected? (1) You must conduct an inspection of the energy control procedure at least annually to ensure that the procedure and the requirements of this standard are followed.

(a) An authorized employee, other than the one(s) using the energy control procedure, must perform the inspection.

(b) The inspection must be conducted to correct any deviations or inadequacies identified.

(c) Where lockout is used for energy control, the inspection must include a review, between the inspector and each authorized employee, of that employee's responsibilities under the energy control procedure.

(d) Where tagout is used for energy control, the inspection must include a review, between the inspector and each authorized and affected employee, of that employee's responsibilities under the energy control procedure, and the elements of WAC 296-307-32021.

(2) You must certify that the inspections have been performed. The certification must identify the machine or equipment on which the energy control procedure was being used, the date of the inspection, the employees included in the inspection, and the person performing the inspection.

[Statutory Authority: RCW 49.17.040. 98-24-096, § 296-307-32017, filed 12/1/98, effective 3/1/99. 97-09-013, recodified as § 296-307-32017, filed 4/7/97, effective 4/7/97. Statutory Authority: RCW 49.17.040, [49.17.]050 and [49.17.]060. 96-22-048, § 296-306A-32017, filed 10/31/96, effective 12/1/96.]

WAC 296-307-32019 What general requirements apply to energy control program training and communication? You must provide training to ensure that employees understand the purpose and function of the energy control program, and that employees have the knowledge and skills required for the safe application, use, and removal of the energy controls. The training must include the following:

(1) Each authorized employee must receive training in the recognition of applicable hazardous energy sources, the type and magnitude of the energy available in the workplace, and the methods and means necessary for energy isolation and control.

(2) Each affected employee must be instructed in the purpose and use of the energy control procedure.

(3) All other employees who work in an area where energy control procedures must be used, must be instructed about the procedure and the prohibition against attempting to restart or reenergize machines or equipment that are locked out or tagged out.

[97-09-013, recodified as § 296-307-32019, filed 4/7/97, effective 4/7/97. Statutory Authority: RCW 49.17.040, [49.17.]050 and [49.17.]060. 96-22-048, § 296-306A-32019, filed 10/31/96, effective 12/1/96.]

WAC 296-307-32021 What additional requirements apply to tagout training and communication? When tagout systems are used, employees must also be trained in the following limitations of tags:

(1) Tags are warning devices affixed to energy isolating devices, and do not provide the physical restraint on those devices that is provided by a lock.

(2) When a tag is attached to an energy isolating means, it is not to be removed without approval of the authorized

person responsible for it, and it is never to be bypassed, ignored, or otherwise defeated.

(3) Tags must be legible and understandable by all authorized, affected, and other employees working in the area.

(4) Tags and their means of attachment must be made of materials that will withstand the environmental conditions encountered in the workplace.

(5) Tags may create a false sense of security, and their meaning needs to be understood as part of the overall energy control program.

(6) Tags must be securely attached to energy isolating devices so that they cannot be accidentally detached during use.

[97-09-013, recodified as § 296-307-32021, filed 4/7/97, effective 4/7/97. Statutory Authority: RCW 49.17.040, [49.17.]050 and [49.17.]060. 96-22-048, § 296-306A-32021, filed 10/31/96, effective 12/1/96.]

WAC 296-307-32023 What requirements apply to employee retraining? (1) Authorized and affected employees must be retrained whenever there is a change in job assignments, machines, equipment, or processes that present a new hazard, or when there is a change in the energy control procedures.

(2) Additional retraining must also be provided whenever an inspection reveals, or whenever you believe, that the employee's knowledge or use of the energy control procedures is inadequate.

(3) Retraining must reestablish employee proficiency and introduce new or revised control methods and procedures, as necessary.

[97-09-013, recodified as § 296-307-32023, filed 4/7/97, effective 4/7/97. Statutory Authority: RCW 49.17.040, [49.17.]050 and [49.17.]060. 96-22-048, § 296-306A-32023, filed 10/31/96, effective 12/1/96.]

WAC 296-307-32025 What training records must an employer keep? You must keep records that certify that employee training has been completed and is up to date. The records must contain each employee's name and dates of training.

[97-09-013, recodified as § 296-307-32025, filed 4/7/97, effective 4/7/97. Statutory Authority: RCW 49.17.040, [49.17.]050 and [49.17.]060. 96-22-048, § 296-306A-32025, filed 10/31/96, effective 12/1/96.]

WAC 296-307-32027 Who may perform lockout or tagout? Lockout or tagout must be performed only by authorized employees performing the service or maintenance.

[97-09-013, recodified as § 296-307-32027, filed 4/7/97, effective 4/7/97. Statutory Authority: RCW 49.17.040, [49.17.]050 and [49.17.]060. 96-22-048, § 296-306A-32027, filed 10/31/96, effective 12/1/96.]

WAC 296-307-32029 Who must be notified of lockout and tagout? Affected employees must be notified of the application and removal of lockout or tagout devices. Notification must be given before controls are applied and after they are removed.

[97-09-013, recodified as § 296-307-32029, filed 4/7/97, effective 4/7/97. Statutory Authority: RCW 49.17.040, [49.17.]050 and [49.17.]060. 96-22-048, § 296-306A-32029, filed 10/31/96, effective 12/1/96.]

WAC 296-307-32031 What order of events must lockout or tagout procedures follow? The established lockout or tagout procedures must cover the following elements in the following sequence:

Machinery or equipment shutdown before lockout or tagout:

(1) Before an authorized or affected employee turns off a machine or equipment, the authorized employee must have knowledge of the type and magnitude of the energy, the hazards of the energy to be controlled, and the method or means to control the energy.

(2) The machine or equipment must be turned off or shut down using the procedures established for the machine or equipment. The shutdown must be done in the prescribed order to avoid increased hazards to employees.

(3) All necessary energy isolating devices must be physically located and operated in such a manner as to isolate the machine or equipment from the energy source.

Application of the lockout or tagout device:

(4) Lockout or tagout devices must be affixed to each energy isolating device by authorized employees.

(5) Lockout devices, where used, must be affixed in a manner that will hold the energy isolating devices in a "safe" or "off" position.

(6) Tagout devices, where used, must be affixed in such a manner as will clearly indicate that the operation or movement of energy isolating devices from the "safe" or "off" position is prohibited.

(a) Where tagout devices are used with energy isolating devices designed with the capability of being locked, the tag attachment must be fastened at the same point at which the lock would have been attached.

(b) Where a tag cannot be affixed directly to the energy isolating device, the tag must be located as close as safely possible to the device, in a position that will be immediately obvious to anyone attempting to operate the device.

Eliminating the hazards of stored energy:

(7) After applying lockout or tagout devices to energy isolating devices, all potentially hazardous stored or residual energy must be relieved, disconnected, restrained, and otherwise rendered safe.

(8) If there is a possibility of reaccumulation of stored energy to a hazardous level, verification of isolation must be continued until the servicing or maintenance is completed, or until the possibility of such accumulation no longer exists.

Before beginning service or maintenance:

(9) Prior to starting work on machines or equipment that have been locked out or tagged out, the authorized employee must verify that the machine or equipment has been isolated and deenergized.

[97-09-013, recodified as § 296-307-32031, filed 4/7/97, effective 4/7/97. Statutory Authority: RCW 49.17.040, [49.17.]050 and [49.17.]060. 96-22-048, § 296-306A-32031, filed 10/31/96, effective 12/1/96.]

WAC 296-307-32033 What order of events must be followed to remove lockout or tagout devices? (1) Before removing lockout or tagout devices, the authorized employee must complete the following procedures:

(a) Inspect the work area to ensure that nonessential items have been removed and to ensure that machine or equipment components are operationally intact.

(b) Check the work area to ensure that all employees have been safely positioned or removed.

(2) After lockout or tagout devices have been removed and before a machine or equipment is started, affected employees must be notified that the lockout or tagout device(s) have been removed.

(3) Each lockout or tagout device must be removed from each energy isolating device by the authorized employee who applied the device.

Exception: When the authorized employee who applied the lockout or tagout device is not available to remove it, that device may be removed under your direction, if specific procedures and training for such removal have been developed, documented, and incorporated into the energy control program.

You must ensure that the specific procedure provides equivalent safety to the removal of the device by the authorized employee who applied it. The specific procedure must include at least the following elements:

(a) Verification by the employer that the authorized employee who applied the device is not at the facility;

(b) Making all reasonable efforts to inform the authorized employee that the lockout or tagout device has been removed; and

(c) Ensuring that the authorized employee has this knowledge before resuming work at that facility.

[97-09-013, recodified as § 296-307-32033, filed 4/7/97, effective 4/7/97. Statutory Authority: RCW 49.17.040, [49.17.]050 and [49.17.]060. 96-22-048, § 296-306A-32033, filed 10/31/96, effective 12/1/96.]

WAC 296-307-32035 What requirements apply to testing and positioning machines and equipment? When lockout or tagout devices must be temporarily removed from the energy isolating device and the machine or equipment energized to test or position the machine or equipment, the following sequence of actions must be followed:

(1) Clear the machine or equipment of tools and materials according to WAC 296-307-32033 (1)(a).

(2) Remove employees from the machine or equipment area according to WAC 296-307-32033 (1)(b).

(3) Remove the lockout or tagout devices as specified in WAC 296-307-32033(3).

(4) Energize and proceed with testing or positioning.

(5) Deenergize all systems and reapply energy control measures in accordance with WAC 296-307-32031 to continue the servicing and/or maintenance.

[Statutory Authority: RCW 49.17.040. 98-24-096, § 296-307-32035, filed 12/1/98, effective 3/1/99. 97-09-013, recodified as § 296-307-32035, filed 4/7/97, effective 4/7/97. Statutory Authority: RCW 49.17.040, [49.17.]050 and [49.17.]060. 96-22-048, § 296-306A-32035, filed 10/31/96, effective 12/1/96.]

WAC 296-307-32037 What requirements apply to outside servicing contractors? (1) Whenever outside servicing contractors are to be engaged in activities covered by this standard, you and the outside employer must inform each other of your respective lockout or tagout procedures.

(2) The outside employer must ensure that employees understand and comply with the restrictions and prohibitions of your energy control program.

[97-09-013, recodified as § 296-307-32037, filed 4/7/97, effective 4/7/97. Statutory Authority: RCW 49.17.040, [49.17.]050 and [49.17.]060. 96-22-048, § 296-306A-32037, filed 10/31/96, effective 12/1/96.]

WAC 296-307-32039 What requirements apply to group lockout or tagout? (1) When servicing and/or maintenance is performed by a crew or other group, they must use a procedure that provides a level of protection equivalent to that provided by the implementation of a personal lockout or tagout device.

(2) Group lockout or tagout devices must be used according to the procedures required by WAC 296-307-32013 including, but not limited to, the following:

(a) An authorized employee has primary responsibility for a set number of employees working under the protection of a group lockout or tagout device (such as an operations lock); and

(b) A method for the authorized employee to determine if individual group members are exposed to release of stored energy hazards; and

(c) When more than one crew or group is involved, assignment of overall lockout or tagout control responsibility to an authorized employee designated to coordinate individual group members and ensure continuity of protection; and

(d) Each authorized employee must affix a personal lockout or tagout device to the group lockout device when beginning work, and must remove those devices when the work is complete.

[Statutory Authority: RCW 49.17.040. 98-24-096, § 296-307-32039, filed 12/1/98, effective 3/1/99. 97-09-013, recodified as § 296-307-32039, filed 4/7/97, effective 4/7/97. Statutory Authority: RCW 49.17.040, [49.17.]050 and [49.17.]060. 96-22-048, § 296-306A-32039, filed 10/31/96, effective 12/1/96.]

WAC 296-307-32041 What requirements apply to lockout/tagout during shift changes? During shift or personnel changes, you must ensure that employees follow specific procedures to ensure the continuity of lockout or tagout protection. The procedures must include orderly transfer of lockout or tagout protection between off-going and oncoming employees, to minimize exposure to hazards from the unexpected energization or start up of the machine or equipment, or release of stored energy.

[97-09-013, recodified as § 296-307-32041, filed 4/7/97, effective 4/7/97. Statutory Authority: RCW 49.17.040, [49.17.]050 and [49.17.]060. 96-22-048, § 296-306A-32041, filed 10/31/96, effective 12/1/96.]

Part R
Safety Color Coding; Accident Prevention Signs and Tags

WAC 296-307-330 Safety color coding; accident prevention signs and tags.

[97-09-013, recodified as § 296-307-330, filed 4/7/97, effective 4/7/97. Statutory Authority: RCW 49.17.040, [49.17.]050 and [49.17.]060. 96-22-048, § 296-306A-330, filed 10/31/96, effective 12/1/96.]

WAC 296-307-33001 What definitions apply to this section? "Accident prevention sign" ("sign") means a surface with text or pictographs, meant to warn or instruct employees who may be exposed to hazards. Safety posters and education bulletins are not included in this definition.

"Accident prevention tag" ("tag") means a card that identifies a hazardous condition, generally related to unsafe equipment.

"Major message" means the sign's or tag's text that is more specific than the signal word and that identifies the spe-

cific hazardous condition or safety instruction. Examples include: "High Voltage," "Close Clearance," "Do Not Start," or "Do Not Use" or a corresponding pictograph.

"Pictograph" means a pictorial representation that identifies a specific hazardous condition or safety instruction.

"Signal word" means the sign's or tag's text that contains the word, usually "danger" or "caution" that is intended to capture the employee's immediate attention.

[97-09-013, recodified as § 296-307-33001, filed 4/7/97, effective 4/7/97. Statutory Authority: RCW 49.17.040, [49.17.]050 and [49.17.]060. 96-22-048, § 296-306A-33001, filed 10/31/96, effective 12/1/96.]

WAC 296-307-33003 What does red identify in safety color coding? Use red to identify:

(1) Fire protection equipment;

(2) Safety cans or other portable containers of flammable liquids;

(3) Danger signs and tags;

(4) Emergency stop bars on hazardous machines; and

(5) Stop buttons or electrical switches used to stop machinery in an emergency;

Red lights must be provided at barricades and at temporary obstructions, as specified in ANSI Safety Code for Building Construction, A10.2-1944.

[97-09-013, recodified as § 296-307-33003, filed 4/7/97, effective 4/7/97. Statutory Authority: RCW 49.17.040, [49.17.]050 and [49.17.]060. 96-22-048, § 296-306A-33003, filed 10/31/96, effective 12/1/96.]

WAC 296-307-33005 What does yellow identify in safety color coding? Use yellow to identify:

(1) Caution signs and tags; and

(2) Physical hazards.

[97-09-013, recodified as § 296-307-33005, filed 4/7/97, effective 4/7/97. Statutory Authority: RCW 49.17.040, [49.17.]050 and [49.17.]060. 96-22-048, § 296-306A-33005, filed 10/31/96, effective 12/1/96.]

WAC 296-307-33007 When should signs and tags use "danger" versus "caution"? (1) Danger signs and tags.

(a) Use danger signs and tags when an immediate hazard presents a threat of death or serious injury to employees.

(b) Instruct all employees that danger signs and tags indicate immediate danger and that special precautions are necessary.

(2) Caution signs and tags.

(a) Use caution signs and tags to warn against potential hazards or to caution against unsafe practices.

(b) Instruct all employees that caution signs and tags indicate a possible hazard against which proper precaution should be taken.

[97-09-013, recodified as § 296-307-33007, filed 4/7/97, effective 4/7/97. Statutory Authority: RCW 49.17.040, [49.17.]050 and [49.17.]060. 96-22-048, § 296-306A-33007, filed 10/31/96, effective 12/1/96.]

WAC 296-307-33009 What are the design and color specifications for accident prevention signs? (1) All signs must have rounded or blunt corners and be free from sharp edges. The ends or heads of bolts or other fastening devices must be located so that they do not constitute a hazard.

(2) Danger, caution, directional, informational, exit, and safety instruction signs must comply with the specification of safety colors of the ANSI Z53.1-1971.

[97-09-013, recodified as § 296-307-33009, filed 4/7/97, effective 4/7/97. Statutory Authority: RCW 49.17.040, [49.17.]050 and [49.17.]060. 96-22-048, § 296-306A-33009, filed 10/31/96, effective 12/1/96.]

WAC 296-307-33011 What are the proper uses of accident prevention tags? (1) Use tags as a temporary means of warning employees of a hazardous condition, especially defective equipment. Tags are not a complete warning method, but should be used until the hazard can be eliminated.

For example: You may use a "do not start" tag on power equipment for a short time until the switch in the system can be locked out; you may use a "defective equipment" tag on a damaged ladder while arrangements are made for the ladder to be taken out of service and repaired.

(2) Use of accident prevention tags.

(a) Use tags as a warning to prevent accidental injury or illness to employees who are exposed to hazardous or potentially hazardous conditions, equipment or operations that are out of the ordinary, unexpected or not readily apparent.

(b) Use tags until the identified hazard is eliminated or the hazardous operation is completed. Tags are not necessary if signs, guarding, or other protection is used.

(c) Place "do not start" tags in a conspicuous location and, if possible, so that they block the starting mechanism that would cause hazardous conditions if the equipment was energized.

(3) General accident prevention tag specifications.

(a) Tags must contain a signal word and a major message. The signal word must be either "danger" or "caution."

(b) The signal word must be readable at least five feet from the hazard.

(c) The signal word and the major message must be understandable to all employees who may be exposed to the identified hazard.

(d) Inform all employees of the meaning of the tags used throughout the workplace and what special precautions are necessary.

(e) Attach tags as closely as is safely possible to the hazard. Attach the tags so as to prevent loss or unintentional removal.

(f) The tag and attachment method must be constructed of material that is not likely to deteriorate.

(4) You may use warning tags to represent a hazard level between "caution" and "danger," instead of the required "caution" tag, if they have a signal word of "warning" and an appropriate major message.

(5) Use "out of order" tags only to indicate that a piece of equipment, machinery, etc., is out of order and that it might present a hazard if used.

[97-09-013, recodified as § 296-307-33011, filed 4/7/97, effective 4/7/97. Statutory Authority: RCW 49.17.040, [49.17.]050 and [49.17.]060. 96-22-048, § 296-306A-33011, filed 10/31/96, effective 12/1/96.]

Part S
Fire Protection and Ignition Sources; Exit Routes

WAC 296-307-340 Portable fire extinguishers.

[97-09-013, recodified as § 296-307-340, filed 4/7/97, effective 4/7/97. Statutory Authority: RCW 49.17.040, [49.17.]050 and [49.17.]060. 96-22-048, § 296-306A-340, filed 10/31/96, effective 12/1/96.]

WAC 296-307-34003 What does this section cover? (1) WAC 296-307-340 applies to the placement, use, maintenance, and testing of portable fire extinguishers provided for employee use. WAC 296-307-34012 does not apply to extinguishers provided for employee use on the outside of workplace buildings or structures. If you do not intend for employees to use extinguishers, and your emergency action plan and fire prevention plan meet the requirements of WAC 296-307-35018, then only the requirements of WAC 296-307-34015 and 296-307-34018 apply.

(2) All standpipe and hose systems, automatic sprinkler systems, fixed extinguishing systems, dry-chemical fixed extinguishing systems, water-spray and foam, and fire detection systems, must be installed according to state and local ordinances, codes, and regulations governing such installations.

[Statutory Authority: RCW 49.17.040. 98-24-096, § 296-307-34003, filed 12/1/98, effective 3/1/99. 97-09-013, recodified as § 296-307-34003, filed 4/7/97, effective 4/7/97. Statutory Authority: RCW 49.17.040, [49.17.]050 and [49.17.]060. 96-22-048, § 296-306A-34003, filed 10/31/96, effective 12/1/96.]

WAC 296-307-34006 Who is exempt from the requirements of this section? (1) You are exempt from all requirements of this section, if:

(a) You have implemented a written fire safety policy that requires all employees to evacuate immediately when the fire alarm sounds; and

(b) You have an emergency action plan and a fire prevention plan meeting the requirements of WAC 296-307-35015 and 296-307-35018; and

(c) Extinguishers are not available for employee use in the workplace.

Note: If you are covered by one of the following sections requiring you to provide a portable fire extinguisher, then you may not apply this exemption:

- WAC 296-307-07013(12)—Transporting employees;
- WAC 296-307-34009(8)—Storage of flammables; or
- WAC 296-307-49503(2)—Welding.

(2) You are exempt from the distribution requirements in WAC 296-307-34012, if:

(a) You have an emergency action plan meeting the requirements of WAC 296-307-35015 that authorizes only certain employees to use the available portable fire extinguishers; and

(b) The plan requires all other employees to evacuate immediately when the fire alarm sounds.

[Statutory Authority: RCW 49.17.040. 98-24-096, § 296-307-34006, filed 12/1/98, effective 3/1/99. 97-09-013, recodified as § 296-307-34006, filed 4/7/97, effective 4/7/97. Statutory Authority: RCW 49.17.040, [49.17.]050 and [49.17.]060. 96-22-048, § 296-306A-34006, filed 10/31/96, effective 12/1/96.]

WAC 296-307-34009 What general requirements apply to portable fire extinguishers? (1) You must provide portable fire extinguishers that are readily accessible to employees without subjecting the employees to possible injury.

(2) You must only use approved portable fire extinguishers.

(3) Portable fire extinguishers using carbon tetrachloride or chlorobromomethane extinguishing agents are prohibited.

(4) Water type fire extinguishers with a soldered or riveted shell that use self-generating soda acid or self-generating foam or gas cartridges are prohibited.

(5) You must ensure that all portable fire extinguishers are fully charged, operable, and kept in their designated places at all times except during use.

(6) You must ensure that all portable fire extinguishers are tested, constructed, and used according to the National Fire Protection Association's pamphlet No. 10A-1970.

Note: The supplier of the extinguisher or local fire official can furnish this information.

(7) You must post "no smoking" signs in areas where fire or explosion hazards exist. You must prohibit smoking within fifty feet of all refueling operations. Take precautions to prevent open flames, sparks, or electric arcs in refueling areas.

(8) You must keep a portable fire extinguisher with a rating of at least 12-B units outside the door of any room used to store flammables or combustibles. This extinguisher must not be more than ten feet from the door.

[97-09-013, recodified as § 296-307-34009, filed 4/7/97, effective 4/7/97. Statutory Authority: RCW 49.17.040, [49.17.]050 and [49.17.]060. 96-22-048, § 296-306A-34009, filed 10/31/96, effective 12/1/96.]

WAC 296-307-34012 How should portable fire extinguishers be selected and distributed? (1) You must select and distribute portable fire extinguishers based on the classes of anticipated workplace fires and on the size and degree of hazard that would affect their use.

(2) Distribution of portable fire extinguishers.

(a) For Class A fires: You must distribute portable fire extinguishers so that no employee must travel more than 75 feet (22.9 m) to a fire extinguisher.

Exception: You may use uniformly spaced standpipe systems or hose stations connected to a sprinkler system for emergency use by employees instead of Class A portable fire extinguishers, if:
- The system meets all regulatory requirements governing total coverage of the area to be protected; and
- Employees are trained at least annually in their use.

(b) For Class B fires: You must distribute portable fire extinguishers so that no employee must travel more than 50 feet (15.2 m) to a fire extinguisher.

(c) For Class C fires: You must distribute portable fire extinguishers on the basis of the appropriate pattern for the existing Class A or Class B hazards.

(d) For Class D fires: You must distribute portable fire extinguishers or other containers of Class D extinguishing agent so no employee must travel more than 75 feet (22.9 m) from the combustible metal working area to any extinguishing agent. Portable fire extinguishers for Class D hazards are required in those combustible metal working areas where combustible metal powders, flakes, shavings, or similarly sized products are generated at least once every two weeks.

[97-09-013, recodified as § 296-307-34012, filed 4/7/97, effective 4/7/97. Statutory Authority: RCW 49.17.040, [49.17.]050 and [49.17.]060. 96-22-048, § 296-306A-34012, filed 10/31/96, effective 12/1/96.]

WAC 296-307-34015 What are the requirements for inspection, maintenance and testing of portable fire extinguishers? (1) You are responsible for the inspection, maintenance, and testing of all portable fire extinguishers in the workplace.

(2) You must visually inspect portable extinguishers or hose at least once a month.

(3) You must ensure that portable fire extinguishers receive an annual maintenance check. You must keep records of the maintenance dates for one year after the previous entry or the life of the shell, whichever comes first. You must provide us with a copy of the record if we ask for it.

(4) You must ensure that stored-pressure dry chemical extinguishers that require a twelve-year hydrostatic test are emptied and undergo applicable maintenance procedures every six years.

Exception: Dry chemical extinguishers with nonrefillable disposable containers are exempt from this requirement.

The six years begins when recharging or hydrostatic testing is performed.

(5) You must ensure that alternate equivalent protection is provided when portable fire extinguishers are removed from service for maintenance and recharging.

[97-09-013, recodified as § 296-307-34015, filed 4/7/97, effective 4/7/97. Statutory Authority: RCW 49.17.040, [49.17.]050 and [49.17.]060. 96-22-048, § 296-306A-34015, filed 10/31/96, effective 12/1/96.]

WAC 296-307-34018 What requirements apply to hydrostatic testing? (1) You must ensure that a trained person performs hydrostatic testing with suitable testing equipment and facilities.

(2) You must ensure that portable extinguishers are hydrostatically tested at the intervals listed in the table below.

Type of Extinguishers	Test interval (years)
Soda acid (stainless steel shell)	5
Cartridge operated water and/or antifreeze	5
Stored pressure water and/or antifreeze	5
Wetting agent	5
Foam (stainless steel shell)	5
Aqueous film forming form (AFFF)	5
Loaded stream	5
Dry chemical with stainless steel	5
Carbon dioxide	5
Dry chemical, stored pressure, with mild steel, brazed brass or aluminum shells	12
Dry chemical, cartridge or cylinder operated, with mild steel shells	12
Halon 1211	12
Halon 1301	12
Dry powder, cartridge or cylinder operated, with mild steel shell	12

Exception: Extinguishers must not be hydrostatically tested if the following conditions exist:
(a) When the unit has been repaired by soldering, welding, brazing, or use of patching compounds;
(b) When the cylinder or shell threads are damaged;
(c) When there is corrosion that has caused pitting, including corrosion under removable name plate assemblies;
(d) When the extinguisher has been burned in a fire; or
(e) When a calcium chloride extinguishing agent has been used in a stainless steel shell.

(3) In addition to an external visual examination, you must ensure that the cylinders and shells are examined internally before the hydrostatic testing.

(4) You must ensure that portable fire extinguishers are hydrostatically tested whenever they show new evidence of corrosion or mechanical injury.

(5) You must ensure that hydrostatic tests are performed on extinguisher hose assemblies that are equipped with a shut-off nozzle at the discharge end of the hose. The test interval must be the same as specified for the extinguisher on which the hose is installed.

(6) Carbon dioxide hose assemblies with a shut-off nozzle must be hydrostatically tested at 1,250 psi (8,620 kPa).

(7) Dry chemical and dry powder hose assemblies with a shut-off nozzle must be hydrostatically tested at 300 psi (2,070 kPa).

(8) Hose assemblies passing a hydrostatic test do not require any type of recording or stamping.

(9) You must ensure that hose assemblies for carbon dioxide extinguishers that require a hydrostatic test are tested within a protective cage device.

(10) You must ensure that carbon dioxide extinguishers and nitrogen or carbon dioxide cylinders used with wheeled extinguishers are tested every five years at 5/3 of the service pressure as stamped into the cylinder. Nitrogen cylinders that comply with 29 CFR 173.34(e)(15) may be hydrostatically tested every ten years.

(11) You must ensure that all stored pressure and Halon 1211 types of extinguishers are hydrostatically tested at the factory test pressure not to exceed two times the service pressure.

(12) You must ensure that self-generating type soda acid and foam extinguishers are tested at 350 psi (2,410 kPa).

(13) Air or gas pressure used for hydrostatic testing is prohibited.

(14) You must remove from the workplace all extinguisher shells, cylinders, or cartridges that fail a hydrostatic pressure test, or that are not fit for testing.

(15)(a) Water-jacket equipment must be used for testing compressed gas type cylinders. The equipment must have an expansion indicator that operates with an accuracy within one percent of the total expansion or 0.1 cc (.1 mL) of liquid.

(b) The following equipment must be used to test noncompressed gas type cylinders:

(i) A hydrostatic test pump, hand or power operated, capable of producing not less than one hundred fifty percent of the test pressure, which must include appropriate check valves and fittings;

(ii) A flexible connection for attachment to fittings to test through the extinguisher nozzle, test bonnet, or hose outlet, as is applicable; and

(iii) A protective cage or barrier for personal protection of the tester, designed to provide visual observation of the extinguisher under test.

(16) You must maintain records of the hydrostatic testing. Your records must include:

- The date of test;
- The test pressure used;

• The serial number, or other identifier of the fire extinguisher that was tested; and

• The person or agency performing the test.

You must keep the records until the next testing, or until the extinguisher is taken out of service, whichever comes first. You must provide us with copies of the records if we ask for them.

[97-09-013, recodified as § 296-307-34018, filed 4/7/97, effective 4/7/97. Statutory Authority: RCW 49.17.040, [49.17.]050 and [49.17.]060. 96-22-048, § 296-306A-34018, filed 10/31/96, effective 12/1/96.]

WAC 296-307-34021 What are the training requirements for portable fire extinguishers? (1) If you provide portable fire extinguishers for employee use, then you must also provide training to familiarize employees with the general principles of fire extinguisher use and the hazards involved in fighting fires when they first appear.

You must provide the training when the employee is first hired and at least annually thereafter.

(2) For employees who have been designated to use fire fighting equipment as part of an emergency action plan, you must provide training in the use of the appropriate equipment.

You must provide the training upon initial assignment to the designated group of employees and at least annually thereafter.

[97-09-013, recodified as § 296-307-34021, filed 4/7/97, effective 4/7/97. Statutory Authority: RCW 49.17.040, [49.17.]050 and [49.17.]060. 96-22-048, § 296-306A-34021, filed 10/31/96, effective 12/1/96.]

WAC 296-307-345 Employee alarm systems.

[97-09-013, recodified as § 296-307-345, filed 4/7/97, effective 4/7/97. Statutory Authority: RCW 49.17.040, [49.17.]050 and [49.17.]060. 96-22-048, § 296-306A-345, filed 10/31/96, effective 12/1/96.]

WAC 296-307-34503 What does this section cover? (1) WAC 296-307-345 applies to all emergency employee alarms required by a specific WAC chapter. This section does not apply to discharge or supervisory alarms required on various fixed extinguishing systems or to supervisory alarms on fire suppression, alarm or detection systems unless they are intended to be employee alarm systems.

(2) The maintenance, testing, and inspection requirements of this section apply to all local fire alarm signaling systems used for alerting employees regardless of the other functions of the system.

(3) All predischarge employee alarms required by this chapter must meet the requirements of WAC 296-307-34506 and 296-307-34512.

[Statutory Authority: RCW 49.17.040. 98-24-096, § 296-307-34503, filed 12/1/98, effective 3/1/99. 97-09-013, recodified as § 296-307-34503, filed 4/7/97, effective 4/7/97. Statutory Authority: RCW 49.17.040, [49.17.]050 and [49.17.]060. 96-22-048, § 296-306A-34503, filed 10/31/96, effective 12/1/96.]

WAC 296-307-34506 What general requirements apply to employee alarm systems? (1) Your employee alarm system must provide warning for necessary emergency action called for in the emergency action plan, or safe escape of employees from the workplace.

(2) You must ensure that all employees can see or hear your employee alarm above normal noise or light levels in the workplace. You may use tactile devices to alert employees who can not see or hear the alarm.

(3) You must ensure that your employee alarm is recognizable as an evacuation signal or signal to perform actions designated under the emergency action plan.

(4) You must explain to each employee how to report emergencies. For example: They may use manual pull box alarms, public address systems, radio or telephones. You must post emergency telephone numbers near telephones, or employee notice boards when telephones serve as a means of reporting emergencies. When your communication system also serves as the employee alarm system, you must ensure that all emergency messages have priority over all nonemergency messages.

(5) You must establish procedures for sounding emergency alarms in the workplace. If you have ten or fewer employees in a workplace, direct voice communication is an acceptable procedure for sounding the alarm if all employees can hear it. In this case, you do not need a back-up system.

[97-09-013, recodified as § 296-307-34506, filed 4/7/97, effective 4/7/97. Statutory Authority: RCW 49.17.040, [49.17.]050 and [49.17.]060. 96-22-048, § 296-306A-34506, filed 10/31/96, effective 12/1/96.]

WAC 296-307-34509 What are the installation and restoration requirements for employee alarm systems? (1) You must ensure that all systems installed to comply with this standard are approved. Steam whistles, air horns, strobe lights or similar lighting devices, or tactile devices meeting the requirements of this section must also be approved.

(2) After each test or alarm, you must ensure that all employee alarm systems are restored to normal operating condition as soon as possible. You must ensure that you have spare alarm components available in sufficient quantities and locations for prompt restoration of the system.

[97-09-013, recodified as § 296-307-34509, filed 4/7/97, effective 4/7/97. Statutory Authority: RCW 49.17.040, [49.17.]050 and [49.17.]060. 96-22-048, § 296-306A-34509, filed 10/31/96, effective 12/1/96.]

WAC 296-307-34512 How must employee alarm systems be maintained and tested? (1) You must ensure that all employee alarm systems are maintained in operating condition except when undergoing repairs or maintenance.

(2) You must ensure that a test of the reliability and adequacy of nonsupervised employee alarm systems is made every two months. You must use a different actuation device in each test of a multiactuation device system so that no individual device is used for two consecutive tests.

(3) You must maintain or replace power supplies as often as necessary to ensure fully operational condition. You must provide back-up alarms, such as employee runners or telephones, when systems are out of service.

(4) You must ensure that supervised employee alarm circuitry is supervised and that it will provide positive notification to assigned personnel whenever a deficiency exists in the system. You must ensure that all supervised employee alarm systems are tested at least annually for reliability and adequacy.

(5) You must ensure that employee alarms are serviced, maintained, and tested by someone trained in the operation and functions necessary for reliable and safe operation of the system.

[97-09-013, recodified as § 296-307-34512, filed 4/7/97, effective 4/7/97. Statutory Authority: RCW 49.17.040, [49.17.]050 and [49.17.]060. 96-22-048, § 296-306A-34512, filed 10/31/96, effective 12/1/96.]

WAC 296-307-34515 Where must manually operated devices be located? You must ensure that manually operated actuation devices used with employee alarms are easy to find and accessible.

[97-09-013, recodified as § 296-307-34515, filed 4/7/97, effective 4/7/97. Statutory Authority: RCW 49.17.040, [49.17.]050 and [49.17.]060. 96-22-048, § 296-306A-34515, filed 10/31/96, effective 12/1/96.]

WAC 296-307-350 Exit routes.

[97-09-013, recodified as § 296-307-350, filed 4/7/97, effective 4/7/97. Statutory Authority: RCW 49.17.040, [49.17.]050 and [49.17.]060. 96-22-048, § 296-306A-350, filed 10/31/96, effective 12/1/96.]

WAC 296-307-35003 What does this section cover? WAC 296-307-350 requires you to provide exit routes for employees to leave the workplace safely during emergencies. This section does not apply to mobile workplaces, such as vehicles or vessels.

[Statutory Authority: RCW 49.17.040. 98-24-096, § 296-307-35003, filed 12/1/98, effective 3/1/99. 97-09-013, recodified as § 296-307-35003, filed 4/7/97, effective 4/7/97. Statutory Authority: RCW 49.17.040, [49.17.]050 and [49.17.]060. 96-22-048, § 296-306A-35003, filed 10/31/96, effective 12/1/96.]

WAC 296-307-35006 What definitions apply to this section? "Exit" means the portion of an exit route that is generally separated from other areas to provide a protected way of travel out of the workplace.

"Exit route" means a continuous and unobstructed path of exit travel from any point within a workplace to safety outside. An exit route generally consists of three parts: Access to an exit; the area which provides a way of travel out of the workplace; and the way from the exit to the outside. An exit route includes all vertical and horizontal areas.

[97-09-013, recodified as § 296-307-35006, filed 4/7/97, effective 4/7/97. Statutory Authority: RCW 49.17.040, [49.17.]050 and [49.17.]060. 96-22-048, § 296-306A-35006, filed 10/31/96, effective 12/1/96.]

WAC 296-307-35009 What are the design requirements for exit routes? You must ensure that each workplace meets each of the following requirements:

(1) Each exit is a permanent part of the workplace.

(2) Two exit routes, remote from one another, are available to provide alternate means for employees to safely leave the workplace during an emergency.

(a) A single exit route is permitted where the number of employees, the size of the building, its occupancy, or the arrangement of the workplace indicate that a single exit will allow all employees to exit safely during an emergency. Other means of escape, such as fire exits or accessible windows, should be available where fewer than two exit routes are provided.

(b) More than two exit routes are available to allow employees to safely leave the workplace during an emergency where the number of employees, the size of the building, its occupancy, or the arrangement of the workplace reasonably suggest that reliance on two exit routes could endanger employees.

(3) An exit has only those openings necessary to permit access to, or exit from, occupied areas of the workplace. An opening into an exit is protected by a self-closing fire door that remains closed. Each fire door, its frame, and hardware are listed or approved by a nationally recognized testing laboratory.

(4) Construction materials used to separate an exit have a 1-hour fire resistance rating if the exit connects three or fewer stories. Construction materials used to separate an exit have a 2-hour fire resistance rating if the exit connects 4 or more stories.

(5) Free and unobstructed access to each exit route is provided to ensure safe exit during an emergency.

(a) The exit route is free of material or equipment.

(b) Employees are not required to travel through a room that can be locked, such as a bathroom, or toward a dead end to reach an exit.

(c) Stairs or a ramp are used if the exit route is not substantially level.

(6) An exit leads directly outside or to a street, walkway, refuge area, or to an open space with access to the outside.

(a) The street, walkway, refuge area, or open space to which an exit leads is large enough to accommodate all building occupants likely to use that exit.

(b) A refuge area is:

(i) A space along an exit route protected from the effects of fire either by separation from other spaces within the building or by its location; or

(ii) A floor with at least two spaces separated by smoke-resistant partitions, in a building where each floor is protected by an automatic sprinkler system. An automatic sprinkler system complies with NFPA No. 13, Automatic Sprinkler Systems.

(c) Exit stairs that continue beyond the floor of exit discharge are interrupted by doors, partitions, or other effective means.

(7) Where a doorway or corner of a building is located near a railroad or trolley track so that an employee is liable to walk upon the track in front of an approaching engine or cars, a standard safeguard must be installed with a warning sign.

(8) An exit door can be readily opened from the inside without keys, tools, or special knowledge. A device, such as a panic bar, that locks only from the outside is permitted. An exit door is free of any device or alarm that, if it fails, can restrict emergency use of an exit.

Note: An exit door may be locked or blocked from the inside in a mental, penal, or correctional institution, if supervisory personnel are continually on duty and a plan exists to remove occupants during an emergency.

(9) The opening device on all doors of walk-in refrigerated or freezer rooms must be the type, when locked from the outside with a lock, can be opened from inside.

(10) A side-hinged exit door is used to connect any room to an exit route. A door that connects any room to an exit route swings out if the room may be occupied by more than 50 persons or highly flammable or explosive materials may be used inside.

(11) Each exit route supports the maximum-permitted occupant load for each floor served by the exit route. The capacity of an exit does not decrease with the direction of exit travel.

(12) Minimum height and width requirements:

(a) The ceiling for an exit route is at least 7 feet 6 inches high and the exit route is at least 6 feet 8 inches high at all points.

(b) The width of an exit route is at least 28 inches wide at all points between handrails. An exit route is wider than 28 inches if necessary to accommodate the expected occupant load.

(c) Objects that project into the exit route do not reduce the minimum height and width of an exit route.

(13) An outdoor exit route is permitted if it meets the requirements for an indoor exit route and the following additional requirements.

(a) The exit has guardrails to protect exposed sides.

(b) The exit route is covered if accumulation of snow or ice is likely and is not removed regularly.

(c) The exit route is reasonably straight with smooth, solid, substantially level floors.

(d) The exit route has no dead ends longer than 20 feet.

[97-09-013, recodified as § 296-307-35009, filed 4/7/97, effective 4/7/97. Statutory Authority: RCW 49.17.040, [49.17.]050 and [49.17.]060. 96-22-048, § 296-306A-35009, filed 10/31/96, effective 12/1/96.]

WAC 296-307-35012 What are the operation and maintenance requirements for exit routes? You must ensure that each workplace meets the following requirements:

(1) The workplace exit route is maintained to minimize danger to employees during an emergency.

(a) The workplace exit route is free of explosive or highly flammable furnishings or decorations.

(b) Accumulations of flammable or combustible waste materials are controlled.

(c) An exit route does not require employees to travel toward materials that burn very quickly, emit poisonous fumes, or are explosive, unless those materials are effectively shielded from the exit route.

(2) Each exit route is adequately lit.

(3) Each exit is clearly visible and is marked by a distinctive sign reading "exit."

(a) An exit door is free of signs or decorations that obscure its visibility.

(b) Signs are posted along the exit route indicating the direction of travel to the nearest exit.

(c) The line-of-sight to an exit sign is uninterrupted.

(d) Any doorway or passage that might be mistaken for an exit is marked "not an exit" or with an indication of its actual use.

(e) An exit sign is illuminated to a surface value of at least 5 foot candles by a reliable light source and shows a designated color. Self-luminous or electroluminescent signs have a minimum luminance surface value of .06 footlamberts.

(4) Fire retardant paints or other coatings used in the workplace are maintained.

(5) Each safeguard to protect employees during an emergency is maintained in proper working order.

(6) Employees do not occupy a workplace under construction until an exit route that meets these requirements is available for the portion of the workplace to be occupied.

(a) Employees do not occupy a workplace during repair or alteration unless either all exits and existing fire protection are maintained or alternate fire protection is provided that ensures an equivalent level of safety.

(b) Flammable or explosive materials used during construction or repair do not expose employees to hazards not otherwise present in the workplace or impede emergency escape from the workplace.

(7) An operable employee alarm system with a distinctive signal to warn employees of fire or other emergencies is installed and maintained. No employee alarm system is required if employees can see or smell a fire or other hazard so that it would provide adequate warning to them. The employee alarm system complies with the requirements of WAC 296-307-345.

[Statutory Authority: RCW 49.17.040. 98-24-096, § 296-307-35012, filed 12/1/98, effective 3/1/99. 97-09-013, recodified as § 296-307-35012, filed 4/7/97, effective 4/7/97. Statutory Authority: RCW 49.17.040, [49.17.]050 and [49.17.]060. 96-22-048, § 296-306A-35012, filed 10/31/96, effective 12/1/96.]

WAC 296-307-35015 What are the requirements for an emergency action plan? (1) You must develop an emergency action plan for each part of the workplace as required by WAC 296-307-030 (3)(d).

(a) The plan must be in writing, kept in the workplace, and made available to employees on request.

(b) An employer of 10 or fewer employees may communicate the plan orally to employees rather than develop a written plan.

(2) An emergency action plan must include:

(a) Procedures for emergency evacuation, including exit route assignments;

(b) Procedures to account for all employees after evacuation;

(c) Procedures for reporting a fire or other emergency;

(d) Procedures to follow for emergency operation or shut down of critical equipment before evacuation;

(e) Procedures to follow for rescue and medical duties;

(f) Procedures for operating and maintaining an emergency alarm system; and

(g) Names or job titles of employees to be contacted to get more information about what to do in an emergency.

(3) You must designate employees to assist in the safe emergency evacuation of other employees. You must ensure that the designated employees receive training in emergency evacuation procedures.

(4) You must review the emergency action plan with each employee covered by the plan:

(a) When the plan is developed or the employee is assigned initially to the job;

(b) When the employee's responsibilities under the plan change; and

(c) When the plan is changed.

[Statutory Authority: RCW 49.17.040. 98-24-096, § 296-307-35015, filed 12/1/98, effective 3/1/99. 97-09-013, recodified as § 296-307-35015, filed 4/7/97, effective 4/7/97. Statutory Authority: RCW 49.17.040, [49.17.]050 and [49.17.]060. 96-22-048, § 296-306A-35015, filed 10/31/96, effective 12/1/96.]

WAC 296-307-35018 What are the requirements for a fire prevention plan? (1) You must develop a fire prevention plan for each part of the workplace if required by WAC 296-307-34006(1).

(a) The plan must be in writing, kept in the workplace, and made available to employees on request.

(b) An employer of 10 or fewer employees may communicate the plan orally to employees rather than develop a written plan.

(2) A fire prevention plan must include:

(a) A list of all major fire hazards, including proper handling and storage procedures for hazardous materials, potential ignition sources and their control, and the type of fire protection equipment necessary to control each major hazard;

(b) Procedures to control accumulations of flammable and combustible waste materials;

(c) Procedures for regular maintenance of safeguards installed on heat producing equipment to prevent accidental ignition of combustible materials;

(d) Names or job titles of employees responsible for maintaining equipment to prevent or control sources of ignition or fires;

(e) Names or job titles of employees responsible for control of fuel source hazards.

(3) You must:

(a) Inform employees of the fire hazards to which they are exposed; and

(b) Review with each employee those parts of the fire prevention plan necessary for self-protection upon initial assignment to a job.

[Statutory Authority: RCW 49.17.040. 98-24-096, § 296-307-35018, filed 12/1/98, effective 3/1/99. 97-09-013, recodified as § 296-307-35018, filed 4/7/97, effective 4/7/97. Statutory Authority: RCW 49.17.040, [49.17.]050 and [49.17.]060. 96-22-048, § 296-306A-35018, filed 10/31/96, effective 12/1/96.]

Part T
Electrical

WAC 296-307-360 Electrical.

[97-09-013, recodified as § 296-307-360, filed 4/7/97, effective 4/7/97. Statutory Authority: RCW 49.17.040, [49.17.]050 and [49.17.]060. 96-22-048, § 296-306A-360, filed 10/31/96, effective 12/1/96.]

WAC 296-307-36005 What does this part cover? (1) Chapter 296-307 WAC Part T covers methods to protect against electrical hazards in agricultural workplaces.

(2) Chapter 296-307 WAC Part T does not cover:

• Installations in watercraft, or automotive vehicles; or

• Electric welding. (See chapter 296-307 WAC Part V.)

(3) Unless otherwise provided in this chapter all electrical work, installation, and wire capacities must be according to the National Electrical Code, NFPA 70-1973; ANSI C1-1971, and all other applicable standards administered by the department of labor and industries.

[Statutory Authority: RCW 49.17.040. 98-24-096, § 296-307-36005, filed 12/1/98, effective 3/1/99. 97-09-013, recodified as § 296-307-36005, filed 4/7/97, effective 4/7/97. Statutory Authority: RCW 49.17.040, [49.17.]050 and [49.17.]060. 96-22-048, § 296-306A-36005, filed 10/31/96, effective 12/1/96.]

WAC 296-307-36010 What definitions apply to this part? The following definitions apply to this part:

"Acceptable" means an installation or equipment that is acceptable to the department and meets the requirements of this section. An installation or equipment is acceptable if:

(1) It is accepted, certified, listed, labeled, or otherwise determined to be safe by a nationally recognized testing laboratory; or

(2) For installations or equipment that no nationally recognized testing laboratory accepts, certifies, lists, labels, or determines to be safe, it is inspected or tested by another federal agency, or by state, municipal, or other local authority responsible for enforcing occupational safety provisions of the National Electrical Code, and complies with the provisions of the National Electrical Code, and complies with the provisions of the National Electrical Code as applied in this section; or

(3) For custom-made equipment or related installations that are designed, fabricated for, and intended for use by a particular customer, it is determined to be safe for its intended use by its manufacturer on the basis of test data that you keep and make available for our inspection.

"Accepted" means an installation that has been inspected and certified by a nationally recognized testing laboratory to meet specified plans or procedures of applicable codes.

"Bonding jumper" means a reliable conductor that provides the correct electrical conductivity between metal parts that are required to be electrically connected.

"Branch circuits" means the part of a wiring system extending beyond the final overcurrent device protecting the circuit. A device not approved for branch circuit protection, such as thermal cutout or motor overload protective device, is not considered as the overcurrent device protecting the circuit.

"Certified" means equipment that:

• Has been tested and found by a nationally recognized testing laboratory to meet nationally recognized standards, or to be safe for use in a specified manner; or

• Is a kind whose production is periodically inspected by a nationally recognized testing laboratory; and

• Bears a label, tag, or other record of certification.

"Exposed" means a live part that can be accidentally touched or approached nearer than a safe distance. This term applies to parts that are not suitably guarded, isolated, or insulated.

"Fixed equipment" means equipment fastened or connected by permanent wiring methods.

"Ground" means a conducting connection, whether intentional or accidental, between an electrical circuit or equipment and earth, or to some conducting body that serves in place of the earth.

"Grounded" means connected to earth or to some conducting body that serves in place of the earth.

"Isolated" means equipment that is not readily accessible except through special means of access.

"Labeled" means equipment that has an attached label, symbol, or other identifying mark of a nationally recognized testing laboratory that:

• Makes periodic inspections of the production of such equipment; and

• Whose labeling indicates compliance with nationally recognized standards or tests to determine safe use in a specified manner.

"Qualified person" means a person who is familiar with the construction and operation of the equipment and the hazards involved.

Note 1: Whether an employee is considered a "qualified person" depends on various circumstances in the workplace. It is possible and likely for an individual to be considered "qualified" with regard to certain equipment in the workplace, but "unqualified" as to other equipment.

Note 2: An employee undergoing on-the-job training and who, in the course of such training, has demonstrated an ability to perform duties safely at his or her level of training and who is under the direct supervision of a qualified person is considered a qualified person for the performance of those duties.

"Shock hazard" exists at an accessible part in a circuit between the part and ground, or other accessible parts if the potential is more than 42.4 volts peak and the current through a 1,500 ohm load is more than 5 milliamperes.

"Weatherproof" means constructed or protected so that exposure to the weather does not interfere with successful operation. Rainproof, raintight, or watertight equipment may be considered weatherproof where weather conditions other than wetness, such as snow, ice, dust, or temperature extremes, are not a factor.

[97-09-013, recodified as § 296-307-36010, filed 4/7/97, effective 4/7/97. Statutory Authority: RCW 49.17.040, [49.17.]050 and [49.17.]060. 96-22-048, § 296-306A-36010, filed 10/31/96, effective 12/1/96.]

WAC 296-307-362 General electrical requirements.

[97-09-013, recodified as § 296-307-362, filed 4/7/97, effective 4/7/97. Statutory Authority: RCW 49.17.040, [49.17.]050 and [49.17.]060. 96-22-048, § 296-306A-362, filed 10/31/96, effective 12/1/96.]

WAC 296-307-36203 What electrical equipment must be approved? The conductors and equipment required or permitted by this section must be approved.

[97-09-013, recodified as § 296-307-36203, filed 4/7/97, effective 4/7/97. Statutory Authority: RCW 49.17.040, [49.17.]050 and [49.17.]060. 96-22-048, § 296-306A-36203, filed 10/31/96, effective 12/1/96.]

WAC 296-307-36206 How must electrical equipment safety be determined? (1) Electrical equipment must be free from hazards to employees. Safety of equipment must be determined using the following considerations:

(a) Suitability for installation and use according to the requirements of this part. Suitability of equipment for a specific purpose may be shown by listing or labeling for that purpose.

(b) Mechanical strength and durability, including, for parts designed to enclose and protect other equipment, the adequacy of the protection provided.

(c) Electrical insulation.

(d) Heating effects under conditions of use.

(e) Arcing effects.

(f) Classification by type, size, voltage, current capacity, specific use.

(g) Other factors that contribute to the practical safeguarding of employees using or likely to come in contact with the equipment.

(2) Listed or labeled equipment must be used or installed according to any instructions included in the listing or labeling.

[97-09-013, recodified as § 296-307-36206, filed 4/7/97, effective 4/7/97. Statutory Authority: RCW 49.17.040, [49.17.]050 and [49.17.]060. 96-22-048, § 296-306A-36206, filed 10/31/96, effective 12/1/96.]

WAC 296-307-36209 What requirements apply to guarding live parts? (1) Unless otherwise indicated, live parts of electric equipment operating at 50 volts or more must be guarded against accidental contact by an approved cabinet or other form of approved enclosure, or by any of the following:

(a) Location in a room, vault, or similar enclosure that is accessible only to qualified persons.

(b) Suitable permanent substantial partitions or screens arranged so that only qualified persons have access to the area within reach of the live parts. Any openings in such partitions or screens must be small enough and located so that employees are not likely to come into accidental contact with live parts or to bring conducting objects into contact with them.

(c) Location on a suitable balcony, gallery, or platform elevated and accessible only to qualified persons.

(d) Elevation of eight feet or more above the floor or other working surface.

(2) In locations where electric equipment would be exposed to physical damage, enclosures or guards must be arranged and be strong enough to prevent damage.

(3) Entrances to rooms and other guarded locations containing exposed live parts must be marked with conspicuous warning signs forbidding unqualified persons to enter.

(4) Electrical repairs must be made only by qualified persons that you authorize.

(5) Fuse handling equipment, insulated for the circuit voltage, must be used to remove or install fuses when the fuse terminals are energized.

(6) Employees must be prohibited from working closely enough to an electric power circuit to contact it unless the employee is protected against electric shock.

Note: The circuit must be protected by deenergizing the circuit and grounding it, by guarding it, by effective insulation, or other means.

(7) In work areas where the exact location of underground electric power lines is unknown, employees using jack-hammers, bars or other hand tools that may contact a line must have insulated protective gloves.

[97-09-013, recodified as § 296-307-36209, filed 4/7/97, effective 4/7/97. Statutory Authority: RCW 49.17.040, [49.17.]050 and [49.17.]060. 96-22-048, § 296-306A-36209, filed 10/31/96, effective 12/1/96.]

WAC 296-307-36212 What workspace must be provided? (1) When parts are exposed, the minimum clearance for the workspace must be at least six feet six inches high, or at least a radius of three feet wide.

(2) There must be enough clearance to permit at least a 90° opening of all doors or hinged panels.

[97-09-013, recodified as § 296-307-36212, filed 4/7/97, effective 4/7/97. Statutory Authority: RCW 49.17.040, [49.17.]050 and [49.17.]060. 96-22-048, § 296-306A-36212, filed 10/31/96, effective 12/1/96.]

WAC 296-307-36215 What general requirements apply to splices? Conductors must be spliced or joined with splicing devices suitable for the use or by brazing, welding, or soldering with a fusible metal or alloy. Soldered splices must first be spliced or joined so they are mechanically and electrically secure without solder and then soldered. (Rosin-core solder should be used instead of acid core solder when joining electrical conductors.) All splices and joints and the free ends of conductors must be covered with an insulation equivalent to that of the conductors or with an insulating device suitable for the purpose.

[97-09-013, recodified as § 296-307-36215, filed 4/7/97, effective 4/7/97. Statutory Authority: RCW 49.17.040, [49.17.]050 and [49.17.]060. 96-22-048, § 296-306A-36215, filed 10/31/96, effective 12/1/96.]

WAC 296-307-36218 What protection must be provided against combustible materials? Parts of electric equipment that in ordinary operation produce arcs, sparks, flames, or molten metal must be enclosed or separated and isolated from all combustible material.

[97-09-013, recodified as § 296-307-36218, filed 4/7/97, effective 4/7/97. Statutory Authority: RCW 49.17.040, [49.17.]050 and [49.17.]060. 96-22-048, § 296-306A-36218, filed 10/31/96, effective 12/1/96.]

WAC 296-307-36221 How must electrical equipment be marked? All electrical equipment in use must have the manufacturer's name, trademark, or other descriptive marking of the organization responsible for the product on the equipment. Other markings must be provided giving voltage, current, wattage, or other ratings as necessary. The marking must be durable enough to withstand the environment.

[97-09-013, recodified as § 296-307-36221, filed 4/7/97, effective 4/7/97. Statutory Authority: RCW 49.17.040, [49.17.]050 and [49.17.]060. 96-22-048, § 296-306A-36221, filed 10/31/96, effective 12/1/96.]

WAC 296-307-36224 How must disconnecting means be marked? Each disconnecting means required by this part for motors and appliances must be legibly marked to indicate its purpose, unless located and arranged so the purpose is evident. Each service, feeder, and branch circuit, at its disconnecting means or overcurrent device, must be legibly marked to indicate its purpose, unless located and arranged so the purpose is evident. These markings must be durable enough to withstand the environment involved.

[97-09-013, recodified as § 296-307-36224, filed 4/7/97, effective 4/7/97. Statutory Authority: RCW 49.17.040, [49.17.]050 and [49.17.]060. 96-22-048, § 296-306A-36224, filed 10/31/96, effective 12/1/96.]

WAC 296-307-36227 What access and working space must be provided for electrical equipment of 600 volts, nominal, or less? Sufficient access and working space must be provided and maintained about all electric equipment to permit ready and safe operation and maintenance of such equipment.

(1) Unless otherwise indicated, the dimension of the working space in the direction of access to live parts operating at 600 volts or less and likely to require examination, adjustment, servicing, or maintenance while alive must be at least that indicated in the table below. Also, workspace must be at least 30 inches wide in front of the electric equipment. Distances must be measured from the live parts if they are exposed, or from the enclosure front or opening if the live parts are enclosed. Concrete, brick, or tile walls are considered grounded. Working space is not required behind assemblies such as dead-front switchboards or motor control centers where there are no renewable or adjustable parts such as fuses or switches on the back and where all connections are accessible from other directions.

Working Clearances

Nominal voltage to ground	Minimum clear distance for condition (ft)		
	(a)	(b)	(c)
0-150	13	13	3
151-600	13	3-1/2	4

Conditions:
(a) Exposed live parts on one side and no live or grounded parts on the other side of the working space, or exposed live parts on both sides guarded by suitable wood or other insulating material. Insulated wire or insulated busbars operating at 300 volts or less are not considered live parts.
(b) Exposed live parts on one side and grounded parts on the other side.
(c) Exposed live parts on both sides of the workspace (not guarded as in (a)) with the operator between.

(2) Working space required by this part must not be used for storage. When normally enclosed live parts are exposed for inspection or servicing, the working space, if in a passageway or general open space, must be suitably guarded.

(3) At least one entrance of sufficient area must be provided to give access to the working space about electric equipment.

(4) Where there are live parts normally exposed on the front of switchboards or motor control centers, the working space in front of such equipment must be at least 3 feet.

(5) All working spaces around service equipment, switchboards, panelboards, and motor control centers installed indoors must be adequately lit.

(6) The minimum headroom of working spaces about service equipment, switchboards, panelboards, or motor control centers must be 6 feet 3 inches.

"Motor control center" means an assembly of one or more enclosed sections having a common power bus and principally containing motor control units.

[97-09-013, recodified as § 296-307-36227, filed 4/7/97, effective 4/7/97. Statutory Authority: RCW 49.17.040, [49.17.]050 and [49.17.]060. 96-22-048, § 296-306A-36227, filed 10/31/96, effective 12/1/96.]

WAC 296-307-36230 What access and working space must be provided for electrical equipment over 600 volts, nominal? (1) Conductors and equipment used on circuits exceeding 600 volts, nominal, must meet all requirements of WAC 296-307-36221 and the additional requirements of this section. This section does not apply to equipment on the supply side of the service conductors.

(2) Electrical installations in a vault, room, closet or area surrounded by a wall, screen, or fence, with access controlled by lock and key or other approved means, are considered accessible to qualified persons only. A wall, screen, or fence less than 8 feet high is not considered to prevent access unless

it has other features that provide a degree of isolation equivalent to an 8 foot fence. The entrances to all buildings, rooms, or enclosures containing exposed live parts or exposed conductors operating at over 600 volts, nominal, must be kept locked or under the observation of a qualified person at all times.

(a) Electrical installations with exposed live parts must be accessible to qualified persons only.

(b) Electrical installations that are open to unqualified persons must be made with metal-enclosed equipment or enclosed in a vault or in an area, with access controlled by a lock. If metal-enclosed equipment is installed so that the bottom of the enclosure is less than 8 feet above the floor, the door or cover must be kept locked. Metal-enclosed switchgear, unit substations, transformers, pull boxes, connection boxes, and other similar associated equipment must be marked with appropriate caution signs. If equipment is exposed to physical damage from vehicular traffic, guards must be provided to prevent damage. Ventilating or similar openings in metal-enclosed equipment must be designed so that foreign objects inserted through these openings will be deflected from energized parts.

(3) You must provide and maintain enough space around electric equipment to permit ready and safe operation and maintenance of equipment. Where energized parts are exposed, the minimum clear workspace must be at least 6 feet 6 inches high (measured vertically from the floor or platform), or less than 3 feet wide (measured parallel to the equipment). The depth must meet the requirements of Table T. The workspace must be adequate to permit at least a 90-degree opening of doors or hinged panels.

(a) The minimum clear working space in front of electric equipment such as switchboards, control panels, switches, circuit breakers, motor controllers, relays, and similar equipment must be at least that specified in Table T unless otherwise indicated. Distances must be measured from the live parts if they are exposed, or from the enclosure front or opening if the live parts are enclosed. However, working space is not required in back of equipment such as deadfront switchboards or control assemblies where there are no renewable or adjustable parts (such as fuses or switches) on the back and where all connections are accessible from another direction. Where rear access is required to work on deenergized parts on the back of enclosed equipment, a minimum working space of 30 inches horizontally shall be provided.

Table T
Minimum Depth of Clear Working Space
in Front of Electric Equipment

	Conditions (ft)		
Nominal voltage to ground	(a)	(b)	(c)
601 to 2,500	3	4	5
2,501 to 9,000	4	5	6
9,001 to 25,000	5	6	9
25,001 to 75kV1	6	8	10
Above 75kV1	8	10	12

Note: Minimum depth of clear working space in front of electric equipment with a nominal voltage to ground above 25,000 volts may be the same as for 25,000 volts under conditions (a), (b) and (c) for installations built prior to April 16, 1981.

Conditions:
(a) Exposed live parts on one side and no live or grounded parts on the other side of the working space, or exposed live parts on both sides guarded by suitable wood or other insulating materials. Insulated wire or insulated busbars operating at 300 volts or less are not considered live parts.
(b) Exposed live parts on one side and grounded parts on the other side. Concrete, brick, or tile walls will be considered grounded surfaces.
(c) Exposed live parts on both sides of the workspace (not guarded as in (a)) with the operator between.

(b) All working spaces around electric equipment must be adequately lit. The lighting outlets shall be arranged so that anyone changing lamps or making repairs on the lighting system will not be endangered by live parts or other equipment. The points of control must be located so that no one is likely to come in contact with any live part or moving part of the equipment while turning on the lights.

(c) Unguarded live parts above working space must be elevated to at least the height specified below:

Elevation of Unguarded
Energized Parts Above Working Space

Nominal voltage between phases	Minimum elevation
601 to 7,500	8 feet 6 inches
7,501 to 35,000	9 feet
Over 35kV	9 feet + 0.37 inches per kV above 35kV

Note: Minimum elevation may be 8 feet for installations built prior to April 16, 1981, if the nominal voltage between phases is in the range of 601-6600 volts.

(4) Entrance and access to workspace must meet the following requirements:

(a) At least one entrance that is at least 24 inches wide and 6 feet 6 inches high must be provided to give access to the working space around electric equipment. On switchboard and control panels over 48 inches wide, there must be one entrance at each end of the board where practical. Where bare energized parts at any voltage or insulated energized parts above 600 volts are located adjacent to the entrance, they must be suitably guarded.

(b) Permanent ladders or stairways must be provided to give safe access to the working space around electric equipment installed on platforms, balconies, mezzanine floors, or in attic or roof rooms or spaces.

[Statutory Authority: RCW 49.17.040. 98-24-096, § 296-307-36230, filed 12/1/98, effective 3/1/99. 97-09-013, recodified as § 296-307-36230, filed 4/7/97, effective 4/7/97. Statutory Authority: RCW 49.17.040, [49.17.]050 and [49.17.]060. 96-22-048, § 296-306A-36230, filed 10/31/96, effective 12/1/96.]

WAC 296-307-364 Electrical installation and maintenance.

[97-09-013, recodified as § 296-307-364, filed 4/7/97, effective 4/7/97. Statutory Authority: RCW 49.17.040, [49.17.]050 and [49.17.]060. 96-22-048, § 296-306A-364, filed 10/31/96, effective 12/1/96.]

WAC 296-307-36403 How must flexible cords and cables be installed and maintained? (1) Extension cords used with portable electric tools and appliances must be three wire and must be fitted with an approved grounding attachment plug and receptacle providing ground continuity.

Exception: This does not apply to cords used with portable tools and equipment provided by an approved system of double insulation or its equivalent.

(2) Worn or frayed electric cables are prohibited.

[97-09-013, recodified as § 296-307-36403, filed 4/7/97, effective 4/7/97. Statutory Authority: RCW 49.17.040, [49.17.]050 and [49.17.]060. 96-22-048, § 296-306A-36403, filed 10/31/96, effective 12/1/96.]

WAC 296-307-36406 How must attachment plugs and receptacles be installed and maintained? (1) Attachment plugs used in work areas must be constructed so that they will endure rough use and have a suitable cord grip to prevent strain on the terminal screws.

(2) Attachment plugs must be approved grounding plugs.

(3) Receptacles for attachment plugs must have approved concealed contacts with a contact for extending ground continuity. Receptacles must be designed and constructed to ensure that the plug can be pulled out without leaving any live parts exposed to accidental contact.

(4) Polarized attachment plugs, receptacles, and cord connectors must be wired to maintain continuity.

(5) Polarized attachment plugs, receptacles, and cord connectors for plugs and polarized plugs must have the terminal intended for connection to the grounded (white) conductor identified by a metal coating that is mostly white. If the terminal is not visible, its entrance hole must be marked with the word "white," or the color white.

(6) The terminal for the connection of the equipment grounding conductor must be:

(a) A green colored, not easily removed terminal screw with hexagonal head; or

(b) A green colored, hexagonal, not easily removed terminal nut; or

(c) A green colored pressure wire connector.

If the terminal for the grounding conductor is not visible, the conductor entrance hole must be marked with the word "green" or the color green.

Note: Two-wire attachment plugs, unless of the polarity type, need not have their terminals marked for identification.

(7) Where different voltages, or types of current (A.C. or D.C.) are to be supplied by portable cords, receptacles must be designed so that attachment plugs used on the circuits are not interchangeable.

(8) Attachment plugs or other connectors supplying equipment at more than 300 volts must be skirted or otherwise designed so that arcs are confined.

[97-09-013, recodified as § 296-307-36406, filed 4/7/97, effective 4/7/97. Statutory Authority: RCW 49.17.040, [49.17.]050 and [49.17.]060. 96-22-048, § 296-306A-36406, filed 10/31/96, effective 12/1/96.]

WAC 296-307-36409 What must employees do when equipment causes electrical shock? Employees must report all shocks received from electrical equipment, no matter how slight, immediately to you. The equipment causing the shock must be checked and any necessary corrective action taken immediately.

[97-09-013, recodified as § 296-307-36409, filed 4/7/97, effective 4/7/97. Statutory Authority: RCW 49.17.040, [49.17.]050 and [49.17.]060. 96-22-048, § 296-306A-36409, filed 10/31/96, effective 12/1/96.]

WAC 296-307-36412 What grounding and bonding requirements apply to equipment installation and maintenance? (1) The path to ground must have enough carrying capacity to conduct safely the currents likely to be imposed on it; and have low enough impedance to limit the potential above ground and to result in the operation of the overcurrent devices in the circuit.

(2) Driven rod electrodes must, where practical, have a resistance to ground of a maximum of 25 ohms. Where the resistance is over 25 ohms, two electrodes connected in parallel shall be used.

(3) Grounding circuits must be checked to ensure that the circuit between the ground and the grounded power conductor has a resistance that is low enough to permit sufficient current to flow to cause the fuse or circuit breaker to interrupt the current.

(4) Conductors used for bonding and grounding equipment must be large enough to carry the anticipated current.

[97-09-013, recodified as § 296-307-36412, filed 4/7/97, effective 4/7/97. Statutory Authority: RCW 49.17.040, [49.17.]050 and [49.17.]060. 96-22-048, § 296-306A-36412, filed 10/31/96, effective 12/1/96.]

WAC 296-307-36415 What requirements apply to disconnecting means? (1) Disconnecting means must be located or shielded so that employees will not be injured. Using open knife switches is prohibited.

(2) Boxes for disconnecting means must be securely and rigidly fastened to the surface upon which they are mounted, and fitted with covers.

[97-09-013, recodified as § 296-307-36415, filed 4/7/97, effective 4/7/97. Statutory Authority: RCW 49.17.040, [49.17.]050 and [49.17.]060. 96-22-048, § 296-306A-36415, filed 10/31/96, effective 12/1/96.]

WAC 296-307-36418 What requirements apply to identification and load rating of electrical equipment? (1) Name plates, rating data, and marks of identification on electrical equipment and electrically operated machines must not be removed, defaced or obliterated.

(2) In existing installations, no changes in circuit protection must be made to increase the load beyond the load rating of the circuit wiring, as specified in the National Electrical Code, NFPA 70-1973; ANSI C1-1972, Article 310.

(3) Tampering with, bridging, or using oversize fuses is prohibited. If fuses blow repeatedly, employees must immediately report the trouble to you or to an authorized electrician.

(4) Attempting to start electric motors that kick out repeatedly is prohibited.

[97-09-013, recodified as § 296-307-36418, filed 4/7/97, effective 4/7/97. Statutory Authority: RCW 49.17.040, [49.17.]050 and [49.17.]060. 96-22-048, § 296-306A-36418, filed 10/31/96, effective 12/1/96.]

WAC 296-307-36421 How must equipment be installed in wet locations? (1) Cabinets, cutout boxes, fittings, boxes, and panelboard enclosures in damp or wet locations must be installed to prevent moisture or water from entering and accumulating within the enclosures. In wet locations the enclosures must be weatherproof.

(2) Switches, circuit breakers, and switchboards installed in wet locations must be enclosed in weatherproof enclosures.

[97-09-013, recodified as § 296-307-36421, filed 4/7/97, effective 4/7/97. Statutory Authority: RCW 49.17.040, [49.17.]050 and [49.17.]060. 96-22-048, § 296-306A-36421, filed 10/31/96, effective 12/1/96.]

WAC 296-307-366 Wiring design and protection.

[97-09-013, recodified as § 296-307-366, filed 4/7/97, effective 4/7/97. Statutory Authority: RCW 49.17.040, [49.17.]050 and [49.17.]060. 96-22-048, § 296-306A-366, filed 10/31/96, effective 12/1/96.]

WAC 296-307-36603 How must grounded and grounding conductors be used and identified? (1) A conductor used as a grounded conductor must be identified separately from all other conductors. A conductor used as an equipment grounding conductor must be identified separately from all other conductors.

(2) A grounded conductor must not be attached to any terminal or lead to reverse the designated polarity.

(3) Using a grounding terminal or grounding-type device on a receptacle, cord connector, or attachment plug for anything other than grounding is prohibited.

[97-09-013, recodified as § 296-307-36603, filed 4/7/97, effective 4/7/97. Statutory Authority: RCW 49.17.040, [49.17.]050 and [49.17.]060. 96-22-048, § 296-306A-36603, filed 10/31/96, effective 12/1/96.]

WAC 296-307-36606 What ampere rating must outlet devices have? Outlet devices must have an ampere rating at least equal to the load served.

[97-09-013, recodified as § 296-307-36606, filed 4/7/97, effective 4/7/97. Statutory Authority: RCW 49.17.040, [49.17.]050 and [49.17.]060. 96-22-048, § 296-306A-36606, filed 10/31/96, effective 12/1/96.]

WAC 296-307-36609 What requirements apply to conductors? This section applies to branch circuit, feeder, and service conductors rated 600 volts, nominal, or less and run outdoors as open conductors.

(1) Conductors supported on poles must provide a horizontal climbing space of at least the following:

(a) For power conductors below communication conductors, 30 inches.

(b) For power conductors alone or above communication conductors:

- 300 volts or less, 24 inches;
- More than 300 volts, 30 inches.

(c) For communication conductors below power conductors with power conductors of:

- 300 volts or less, 24 inches;
- More than 300 volts, 30 inches.

(2) Open conductors must provide at least the following minimum clearances:

(a) 10 feet, above finished grade, sidewalks, or from any platform or projection from which they might be reached;

(b) 12 feet, over areas subject to vehicular traffic other than truck traffic;

(c) 15 feet, over areas that are subject to truck traffic; except

(d) 18 feet, over public streets, alleys, roads, and driveways.

(3) Conductors must have a clearance of at least 3 feet from windows, doors, porches, fire escapes, or similar locations. Conductors run above the top level of a window are considered to be out of reach from that window and, therefore, do not have to be 3 feet away.

(4) Conductors must have a clearance of at least 8 feet from the highest point of roofs they pass over.

Exceptions:
(a) Where the voltage between conductors is 300 volts or less and the roof has a slope of at least 4 inches in 12, the clearance from the roofs must be at least 3 feet; or
(b) Where the voltage between conductors is 300 volts or less, the conductors do not pass over more than 4 feet of the overhang portion of the roof, and they are terminated at a through-the-roof raceway or approved support, the clearance from the roofs must be at least 18 inches.

(5) Lamps for outdoor lighting must be located below all live conductors, transformers, or other electric equipment, unless such equipment is controlled by a disconnecting means that can be locked in the open position or unless adequate clearances or other safeguards are provided for relamping operations.

[97-09-013, recodified as § 296-307-36609, filed 4/7/97, effective 4/7/97. Statutory Authority: RCW 49.17.040, [49.17.]050 and [49.17.]060. 96-22-048, § 296-306A-36609, filed 10/31/96, effective 12/1/96.]

WAC 296-307-36612 What design and protection requirements apply to service-entrances? (1) Disconnecting means for service-entrances must meet the following requirements:

(a) Means must be provided to disconnect all conductors in a building or other structure from the service-entrance conductors. The disconnecting means must plainly indicate whether it is in the open or closed position and must be installed at a readily accessible location nearest the point of entrance of the service-entrance conductors.

(b) Each service disconnecting means must disconnect all ungrounded conductors at the same time.

(2) The following additional requirements apply to services over 600 volts, nominal.

(a) Service-entrance conductors installed as open wires must be guarded to make them accessible only to qualified persons.

(b) Signs warning of high voltage must be posted where other than qualified employees might come in contact with live parts.

[97-09-013, recodified as § 296-307-36612, filed 4/7/97, effective 4/7/97. Statutory Authority: RCW 49.17.040, [49.17.]050 and [49.17.]060. 96-22-048, § 296-306A-36612, filed 10/31/96, effective 12/1/96.]

WAC 296-307-36615 What overcurrent protection must be provided? (1) The following requirements apply to overcurrent protection of circuits rated 600 volts, nominal, or less.

(a) Conductors and equipment must be protected from overcurrent according to their ability to safely conduct current.

(b) Except for motor running overload protection, overcurrent devices must not interrupt the continuity of the grounded conductor unless all conductors of the circuit are opened at the same time.

(c) Except for service fuses, all cartridge fuses that are accessible to other than qualified persons and all fuses and thermal cutouts on circuits over 150 volts to ground must have disconnecting means. This disconnecting means must be installed so that the fuse or thermal cutout can be disconnected from its supply without disrupting service to equipment and circuits unrelated to those protected by the overcurrent device.

(d) Overcurrent devices must be readily accessible to each employee or authorized building management personnel. These overcurrent devices must be located where they will be protected against physical damage and away from easily ignitable material.

(e) Fuses and circuit breakers must be located or shielded so that employees will not be burned or otherwise injured by their operation.

(f) Circuit breakers must meet the following requirements:

(i) Circuit breakers must clearly indicate whether they are in the open (off) or closed (on) position.

(ii) Where circuit breaker handles on switchboards are operated vertically rather than horizontally or rotationally, the up position of the handle must be the closed (on) position.

(iii) If used as switches in 120-volt, fluorescent lighting circuits, circuit breakers must be approved for the purpose and marked "SWD."

(2) Feeders and branch circuits over 600 volts, nominal, must have short-circuit protection.

[97-09-013, recodified as § 296-307-36615, filed 4/7/97, effective 4/7/97. Statutory Authority: RCW 49.17.040, [49.17.]050 and [49.17.]060. 96-22-048, § 296-306A-36615, filed 10/31/96, effective 12/1/96.]

WAC 296-307-36618 What premises wiring systems must be grounded? The following systems that supply premises wiring must be grounded:

(1) All 3-wire DC systems must have their neutral conductor grounded.

(2) Two-wire DC systems operating at 50-300 volts between conductors must be grounded.

Exceptions: This requirement does not apply if:

(a) They supply only industrial equipment in limited areas and are equipped with a ground detector; or

(b) They are rectifier-derived from an AC system that meets the requirements of subsections (3), (4), and (5) of this section; or

(c) They are fire-protective signaling circuits with a maximum current of 0.030 amperes.

(3) AC circuits of less than 50 volts must be grounded if they are installed as overhead conductors outside of buildings or if they are supplied by transformers and the transformer primary supply system is ungrounded or exceeds 150 volts to ground.

(4) AC systems of 50-1000 volts must be grounded under any of the following conditions:

(a) If the system can be grounded so that the maximum voltage to ground on the ungrounded conductors is a maximum of 150 volts;

(b) If the system is nominally rated 480Y/277 volt, 3-phase, 4-wire in which the neutral is used as a circuit conductor;

(c) If the system is nominally rated 240/120 volt, 3-phase, 4-wire in which the midpoint of one phase is used as a circuit conductor; or

(d) If a service conductor is uninsulated.

(5) Exceptions: AC systems of 50-1000 volts are not required to be grounded under any of the following conditions:

(a) If the system is used exclusively to supply industrial electric furnaces for melting, refining, tempering, and the like.

(b) If the system is separately derived and is used exclusively for rectifiers supplying only adjustable speed industrial drives.

(c) If the system is separately derived and is supplied by a transformer that has a primary voltage rating less than 1000 volts, if all of the following conditions are met:

(i) The system is used exclusively for control circuits;

(ii) The conditions of maintenance and supervision ensure that only qualified persons will service the installation;

(iii) Continuity of control power is required; and

(iv) Ground detectors are installed on the control system.

[97-09-013, recodified as § 296-307-36618, filed 4/7/97, effective 4/7/97. Statutory Authority: RCW 49.17.040, [49.17.]050 and [49.17.]060. 96-22-048, § 296-306A-36618, filed 10/31/96, effective 12/1/96.]

WAC 296-307-36621 Must the conductor be grounded for AC premises wiring? For AC premises wiring systems the identified conductor must be grounded.

[97-09-013, recodified as § 296-307-36621, filed 4/7/97, effective 4/7/97. Statutory Authority: RCW 49.17.040, [49.17.]050 and [49.17.]060. 96-22-048, § 296-306A-36621, filed 10/31/96, effective 12/1/96.]

WAC 296-307-36624 What general requirements apply to grounding conductors? (1) For a grounded system, a grounding electrode conductor must be used to connect both the equipment grounding conductor and the grounded circuit conductor to the grounding electrode. Both the equipment grounding conductor and the grounding electrode conductor must be connected to the grounded circuit conductor on the supply side of the service disconnecting means, or on the supply side of the system disconnecting means or overcurrent devices if the system is separately derived.

(2) For an ungrounded service-supplied system, the equipment grounding conductor must be connected to the grounding electrode conductor at the service equipment. For an ungrounded separately derived system, the equipment grounding conductor must be connected to the grounding electrode conductor at, or ahead of, the system disconnecting means or overcurrent devices.

(3) On extensions of existing branch circuits that do not have an equipment grounding conductor, grounding-type receptacles may be grounded to a grounded cold water pipe near the equipment.

[97-09-013, recodified as § 296-307-36624, filed 4/7/97, effective 4/7/97. Statutory Authority: RCW 49.17.040, [49.17.]050 and [49.17.]060. 96-22-048, § 296-306A-36624, filed 10/31/96, effective 12/1/96.]

WAC 296-307-36627 Must the path to ground be continuous? The path to ground from circuits, equipment, and enclosures must be permanent and continuous.

[97-09-013, recodified as § 296-307-36627, filed 4/7/97, effective 4/7/97. Statutory Authority: RCW 49.17.040, [49.17.]050 and [49.17.]060. 96-22-048, § 296-306A-36627, filed 10/31/96, effective 12/1/96.]

WAC 296-307-36630 What supports, enclosures, and equipment must be grounded? (1) Metal cable trays, metal raceways, and metal enclosures for conductors must be grounded.

Exceptions:
(a) Metal enclosures such as sleeves that are used to protect cable assemblies from physical damage need not be grounded; or
(b) Metal enclosures for conductors added to existing installations of open wire, knob-and-tube wiring, and nonmetallic-sheathed cable need not be grounded if all of the following conditions are met:
(i) Runs are less than 25 feet;
(ii) Enclosures are free from probable contact with ground, grounded metal, metal laths, or other conductive materials; and
(iii) Enclosures are guarded against employee contact.

(2) Metal enclosures for service equipment must be grounded.

(3) Frames of electric ranges, wall-mounted ovens, counter-mounted cooking units, clothes dryers, and metal outlet or junction boxes that are part of the circuit for these appliances must be grounded.

(4) Exposed noncurrent-carrying metal parts of fixed equipment that may become energized must be grounded under any of the following conditions:

(a) If within 8 feet vertically or 5 feet horizontally of ground or grounded metal objects and subject to employee contact;

(b) If located in a wet or damp location and not isolated;

(c) If in electrical contact with metal;

(d) If in a hazardous (classified) location;

(e) If supplied by a metal-clad, metal-sheathed, or grounded metal raceway wiring method;

(f) If equipment operates with any terminal at over 150 volts to the ground; however, the following need not be grounded:

(i) Enclosures for switches or circuit breakers used for other than service equipment and accessible to qualified persons only;

(ii) Metal frames of electrically heated appliances that are permanently and effectively insulated from ground; and

(iii) The cases of distribution apparatus such as transformers and capacitors mounted on wooden poles that are over 8 feet above ground or grade level.

(5) Under any of the conditions below, exposed noncurrent-carrying metal parts of cord-connected and plug-connected equipment that may become energized must be grounded.

(a) When equipment is in hazardous (classified) locations.

(b) When equipment is operated at over 150 volts to ground.

Exception: Guarded motors and metal frames of electrically heated appliances need not be grounded if the appliance frames are permanently and effectively insulated from ground.

(c) When equipment is one of the following:

- Refrigerators, freezers, and air conditioners;
- Clothes-washing, clothes-drying and dishwashing machines, sump pumps, and electrical aquarium equipment;
- Hand-held motor-operated tools;
- The following motor-operated appliances: Hedge clippers, lawn mowers, snow blowers, and wet scrubbers;
- Cord-connected and plug-connected appliances used in damp or wet locations or by employees standing on the ground or on metal floors or working inside of metal tanks or boilers;
- Tools likely to be used in wet and conductive locations; and
- Portable hand lamps.

Tools likely to be used in wet and conductive locations need not be grounded if supplied through an isolating transformer with an ungrounded secondary of a maximum of 50 volts. Listed or labeled portable tools and appliances protected by an approved system of double insulation, or its equivalent, need not be grounded. The equipment must be distinctively marked to indicate that the tool or appliance uses an approved system of double insulation.

(6) The metal parts of the following nonelectrical equipment must be grounded: Frames and tracks of electrically operated cranes; frames of nonelectrically driven elevator cars to which electric conductors are attached; hand operated metal shifting ropes or cables of electric elevators, and metal partitions, grill work, and other metal enclosures around equipment of over 750 volts between conductors.

[97-09-013, recodified as § 296-307-36630, filed 4/7/97, effective 4/7/97. Statutory Authority: RCW 49.17.040, [49.17.]050 and [49.17.]060. 96-22-048, § 296-306A-36630, filed 10/31/96, effective 12/1/96.]

WAC 296-307-36633 How must fixed equipment be grounded? (1) Noncurrent-carrying metal parts of fixed equipment, if required to be grounded by this section, must be grounded by an equipment grounding conductor that is contained within the same raceway, cable, or cord, or runs with or encloses the circuit conductors. For DC circuits only, the equipment grounding conductor may be run separately from the circuit conductors.

(2) Electric equipment is considered grounded if it is secured to, and in electrical contact with, a metal rack or structure that is provided for its support and the metal rack or structure is grounded as described above.

For installations made before May 30, 1982, electric equipment is also considered grounded if it is secured to, and in metallic contact with, the grounded structural metal frame of a building. Metal car frames supported by metal hoisting cables attached to or running over metal sheaves or drums of grounded elevator machines are also considered grounded.

[97-09-013, recodified as § 296-307-36633, filed 4/7/97, effective 4/7/97. Statutory Authority: RCW 49.17.040, [49.17.]050 and [49.17.]060. 96-22-048, § 296-306A-36633, filed 10/31/96, effective 12/1/96.]

WAC 296-307-36636 How must high voltage systems be grounded? Grounded high voltage (1000 volts or more) systems and circuits must meet all requirements of WAC 296-307-366 and the additional requirements of this section.

(1) Systems supplying portable or mobile high voltage equipment, other than substations installed on a temporary basis, must meet the following requirements:

(a) Portable and mobile high voltage equipment must be supplied from a system having its neutral grounded through an impedance. If a delta-connected high voltage system is used to supply the equipment, a system neutral must be derived.

(b) Exposed noncurrent-carrying metal parts of portable and mobile equipment must be connected by an equipment grounding conductor to the point at which the system neutral impedance is grounded.

(c) Ground-fault detection and relaying must be provided to automatically deenergize any high voltage system component that has developed a ground fault. The continuity of the equipment grounding conductor must be continuously monitored to deenergize automatically the high voltage feeder to the portable equipment on loss of continuity of the equipment grounding conductor.

(d) The grounding electrode to which the portable or mobile equipment system neutral impedance is connected must be isolated from and separated in the ground by at least 20 feet from any other system or equipment grounding electrode. There must be no direct connection between the grounding electrodes, such as buried pipe, fence, etc.

(2) All noncurrent-carrying metal parts of portable equipment and fixed equipment including their associated fences, housings, enclosures, and supporting structures shall be grounded. However, equipment that is guarded by location and isolated from ground need not be grounded. Additionally, pole-mounted distribution apparatus over 8 feet above ground or grade level need not be grounded.

[Statutory Authority: RCW 49.17.040. 98-24-096, § 296-307-36636, filed 12/1/98, effective 3/1/99. 97-09-013, recodified as § 296-307-36636, filed 4/7/97, effective 4/7/97. Statutory Authority: RCW 49.17.040, [49.17.]050 and [49.17.]060. 96-22-048, § 296-306A-36636, filed 10/31/96, effective 12/1/96.]

WAC 296-307-368 Wiring methods, components, and equipment for general use.

[97-09-013, recodified as § 296-307-368, filed 4/7/97, effective 4/7/97. Statutory Authority: RCW 49.17.040, [49.17.]050 and [49.17.]060. 96-22-048, § 296-306A-368, filed 10/31/96, effective 12/1/96.]

WAC 296-307-36803 Does this section apply to factory-assembled equipment? WAC 296-307-368 does not apply to conductors that are an integral part of factory-assembled equipment.

[Statutory Authority: RCW 49.17.040. 98-24-096, § 296-307-36803, filed 12/1/98, effective 3/1/99. 97-09-013, recodified as § 296-307-36803, filed 4/7/97, effective 4/7/97. Statutory Authority: RCW 49.17.040, [49.17.]050 and [49.17.]060. 96-22-048, § 296-307-36803, filed 10/31/96, effective 12/1/96.]

WAC 296-307-36806 What wiring methods must be used for temporary wiring? Temporary electrical power and lighting wiring methods may be of a class less than would be required for a permanent installation. All requirements for permanent wiring apply to temporary wiring installations, except as indicated in this section.

(1) Temporary electrical power and lighting installations 600 volts, nominal, or less must only be used:

(a) During and for remodeling, maintenance, repair, or demolition of buildings, structures, or equipment, and similar activities;

(b) For experimental or development work; and

(c) For a maximum of 90 days for Christmas lighting and similar purposes.

(2) Temporary wiring over 600 volts, nominal, must only be used during periods of tests, experiments, or emergencies.

(3) General requirements for temporary wiring.

(a) Working spaces, walkways, and similar locations must be kept clear of power cords.

(b) All temporary wiring must be grounded. (See NFPA 70 Art. 250.)

(c) All wiring equipment must be maintained as vapor-tight, dust-tight, or fiber-tight as their approval requires. There must be no loose or missing screws, gaskets, threaded connections, or other conditions that impair the required tightness.

(d) Take precautions to make necessary open wiring accessible only to authorized personnel.

(e) Feeders must originate in an approved distribution center. The conductors must be run as multiconductor cord or cable assemblies, or, where not subject to physical damage, they may be run as open conductors on insulators not more than 10 feet apart.

(f) Branch circuits must originate in an approved power outlet or panelboard. Conductors must be multiconductor cord or cable assemblies or open conductors. If run as open conductors they must be fastened at ceiling height every 10 feet. A branch-circuit conductor must not be laid on the floor. Each branch circuit that supplies receptacles or fixed equipment must have a separate equipment grounding conductor if run as open conductors.

(g) Receptacles must be of the grounding type. Unless installed in a complete metallic raceway, each branch circuit must have a separate equipment grounding conductor and all receptacles must be electrically connected to the grounding conductor.

(h) A bare conductor or an earth return must not be used to wire any temporary circuit.

(i) Suitable disconnecting switches or plug connectors must be installed to permit the disconnection of all ungrounded conductors of each temporary circuit.

(j) Lamps for general illumination must be protected from accidental contact or breakage. Lamps must be elevated at least 7 feet from normal working surface or by a suitable fixture or lampholder with a guard.

(k) Flexible cords and cables must be protected from accidental damage. Sharp corners and projections must be avoided. Where passing through doorways or other pinch points, flexible cords and cables must be protected to avoid damage.

(4) General requirements for temporary lighting.

(a) Temporary lights must have guards to prevent accidental contact with the bulb.

Note: Guards are not required when the entire bulb is below the rim and completely surrounded and protected by the reflector.

(b) Temporary lights must have heavy duty electric cords with connections and insulation maintained in safe condition.

(c) Temporary lights must not be suspended by their electric cords unless cords and lights are designed for suspension.

(d) Brass shell, paper-lined lamp holders are prohibited.

(e) Portable extension lamps used where flammable vapors or gases, combustible dusts, or easily ignitable fibers or flyings are present, must be specifically approved as complete assemblies for the type of hazard.

[97-09-013, recodified as § 296-307-36806, filed 4/7/97, effective 4/7/97. Statutory Authority: RCW 49.17.040, [49.17.]050 and [49.17.]060. 96-22-048, § 296-307-36806, filed 10/31/96, effective 12/1/96.]

WAC 296-307-36809 When may cable trays be used? (1) Only the following may be installed in cable tray systems:

(a) Mineral-insulated metal-sheathed cable (Type MI);

(b) Armored cable (Type AC);

(c) Metal-clad cable (Type MC);

(d) Power-limited tray cable (Type PLTC);

(e) Nonmetallic-sheathed cable (Type NM or NMC);

(f) Shielded nonmetallic-sheathed cable (Type SNM);

(g) Multiconductor service-entrance cable (Type SE or USE);

(h) Multiconductor underground feeder and branch-circuit cable (Type UF);

(i) Power and control tray cable (Type TC);

(j) Other factory-assembled, multiconductor control, signal, or power cables that are specifically approved for installation in cable trays; or

(k) Any approved conduit or raceway with its contained conductors.

(2) In industrial establishments only, where conditions of maintenance and supervision ensure that only qualified persons will service the installed cable tray system, the following cables may also be installed in ladder, ventilated trough, or 4 inch ventilated channel-type cable trays:

Single conductor cables that are 250 MCM or larger and are Types RHH, RHW, MV, USE, or THW, and other 250 MCM or larger single conductor cables if specifically approved for installation in cable trays. Where exposed to direct rays of the sun, cables must be sunlight-resistant.

(3) Cable trays in hazardous (classified) locations must contain only the cable types permitted in such locations.

Exception: Cable tray systems must not be used in hoistways or where subjected to severe physical damage.

[97-09-013, recodified as § 296-307-36809, filed 4/7/97, effective 4/7/97. Statutory Authority: RCW 49.17.040, [49.17.]050 and [49.17.]060. 96-22-048, § 296-306A-36809, filed 10/31/96, effective 12/1/96.]

WAC 296-307-36812 What requirements apply to open wiring on insulators? (1) Open wiring on insulators is only permitted on systems of 600 volts, nominal, or less for industrial or agricultural establishments and for services.

(2) Conductors must be rigidly supported on noncombustible, nonabsorbent insulating materials and must not contact any other objects.

(3) In dry locations with no exposure to severe physical damage, conductors may be separately enclosed in flexible nonmetallic tubing. The tubing must be in continuous lengths a maximum of 15 feet and secured to the surface by straps at maximum intervals of 4 feet 6 inches.

(4) Open conductors must be separated from contact with walls, floors, and wood cross members, or partitions through which they pass by tubes or bushings of noncombustible, nonabsorbent insulating material. If the bushing is shorter than the hole, a waterproof sleeve of nonconductive material must be inserted in the hole and an insulating bushing slipped into the sleeve at each end to keep the conductors completely out of contact with the sleeve. Each conductor must be carried through a separate tube or sleeve.

(5) Conductors within 7 feet of the floor are considered exposed to physical damage. Where open conductors cross ceiling joints and wall studs and are exposed to physical damage, they must be protected.

[97-09-013, recodified as § 296-307-36812, filed 4/7/97, effective 4/7/97. Statutory Authority: RCW 49.17.040, [49.17.]050 and [49.17.]060. 96-22-048, § 296-306A-36812, filed 10/31/96, effective 12/1/96.]

WAC 296-307-36815 What wiring requirements apply to cabinets, boxes, and fittings? (1) Conductors entering boxes, cabinets, or fittings must be protected from abrasion, and openings through which conductors enter must be closed. Unused openings in cabinets, boxes, and fittings must also be closed.

(2) All pull boxes, junction boxes, and fittings must have covers approved for the purpose. All metal covers must be grounded. In completed installations each outlet box must have a cover, faceplate, or fixture canopy. A cover of an outlet box with holes through which a flexible cord pendant passes must have bushings designed for the purpose or have a smooth, well-rounded surface for the cord to run on.

(3) All pull and junction boxes for systems over 600 volts, nominal, must meet the following requirements:

(a) Boxes must provide a complete enclosure for the contained conductors or cables.

(b) Boxes must be closed by suitable covers securely fastened in place. Underground box covers that weigh over 100 pounds meet this requirement. Covers for boxes must be permanently marked "HIGH VOLTAGE." The marking must be on the outside of the box cover and must be readily visible and legible.

[97-09-013, recodified as § 296-307-36815, filed 4/7/97, effective 4/7/97. Statutory Authority: RCW 49.17.040, [49.17.]050 and [49.17.]060. 96-22-048, § 296-306A-36815, filed 10/31/96, effective 12/1/96.]

WAC 296-307-36818 What requirements apply to switches? (1) Single-throw knife switches must be connected so that the blades are dead when the switch is in the open position. Single-throw knife switches must be placed so that gravity will not tend to close them. Single-throw knife switches approved for use in the inverted position must have a locking device that keeps the blades open when set. Double-throw knife switches may be mounted so that the throw will be either vertical or horizontal. However, if the throw is vertical a locking device must be provided to ensure that the blades remain open when so set.

(2) Flush snap switches that are mounted in ungrounded metal boxes and located within reach of conducting floors or other conducting surfaces must have faceplates of nonconducting, noncombustible material.

[97-09-013, recodified as § 296-307-36818, filed 4/7/97, effective 4/7/97. Statutory Authority: RCW 49.17.040, [49.17.]050 and [49.17.]060. 96-22-048, § 296-306A-36818, filed 10/31/96, effective 12/1/96.]

WAC 296-307-36821 Where must switchboards and panelboards be located? Switchboards that have any exposed live parts must be located in permanently dry locations and accessible only to qualified persons. Panelboards must be mounted in cabinets, cutout boxes, or enclosures approved for the purpose and must be dead front. However, panelboards other than the dead front externally operable type are permitted where accessible only to qualified persons. Exposed blades of knife switches must be dead when open.

[97-09-013, recodified as § 296-307-36821, filed 4/7/97, effective 4/7/97. Statutory Authority: RCW 49.17.040, [49.17.]050 and [49.17.]060. 96-22-048, § 296-306A-36821, filed 10/31/96, effective 12/1/96.]

WAC 296-307-36824 When must conductors be insulated? All conductors used for general wiring must be insulated unless otherwise permitted in this section. The conductor insulation must be approved for the voltage, operating temperature, and location of use. Insulated conductors must be distinguishable by appropriate color or other means as grounded conductors, ungrounded conductors, or equipment grounding conductors.

[97-09-013, recodified as § 296-307-36824, filed 4/7/97, effective 4/7/97. Statutory Authority: RCW 49.17.040, [49.17.]050 and [49.17.]060. 96-22-048, § 296-306A-36824, filed 10/31/96, effective 12/1/96.]

WAC 296-307-36827 When may flexible cords and cables be used? (1) Flexible cords and cables must be approved and suitable for conditions of use and location. Flexible cords and cables must be used only for:

(a) Pendants;

(b) Wiring of fixtures;

(c) Connection of portable lamps or appliances;

(d) Elevator cables;

(e) Wiring of cranes and hoists;

(f) Connection of stationary equipment to facilitate frequent interchange;

(g) Prevention of the transmission of noise or vibration;

(h) Appliances where the fastening means and mechanical connections are designed to permit removal for maintenance and repair; or

(i) Data processing cables approved as a part of the data processing system.

(2) If used as permitted above, the flexible cord must have an attachment plug and shall be energized from an approved receptacle outlet.

(3) Unless permitted in subsection (1) of this section, flexible cords and cables must not be used:

(a) As a substitute for the fixed wiring of a structure;

(b) Where run through holes in walls, ceilings, or floors;

(c) Where run through doorways, windows, or similar openings;

(d) Where attached to building surfaces; or

(e) Where concealed behind building walls, ceilings, or floors.

(4) Flexible cords used in show windows and showcases must be Type S, SO, SJ, SJO, ST, STO, SJT, SJTO, or AFS except for the wiring of chain-supported lighting fixtures and supply cords for portable lamps and other merchandise being displayed or exhibited.

[97-09-013, recodified as § 296-307-36827, filed 4/7/97, effective 4/7/97. Statutory Authority: RCW 49.17.040, [49.17.]050 and [49.17.]060. 96-22-048, § 296-306A-36827, filed 10/31/96, effective 12/1/96.]

WAC 296-307-36830 How must flexible cords and cables be identified, spliced, and terminated? (1) A conductor of a flexible cord or cable that is used as a grounded conductor or an equipment grounding conductor must be distinguishable from other conductors. Types SJ, SJO, SJT, SJTO, S, SO, ST, and STO must be durably marked on the surface with the type designation, size, and number of conductors.

(2) Flexible cords must be used only in continuous lengths without splice or tap. Vulcanized splices or equivalent means such as systems using shrinkable materials may be used to repair flexible cords. Hard service flexible cords No. 12 or larger may be repaired by splice if the splice retains the insulation, outer sheath properties, and usage characteristics of the cord being spliced.

(3) Flexible cords must be connected to devices and fittings so that strain relief is provided to prevent pull from being directly transmitted to joints or terminal screws.

[97-09-013, recodified as § 296-307-36830, filed 4/7/97, effective 4/7/97. Statutory Authority: RCW 49.17.040, [49.17.]050 and [49.17.]060. 96-22-048, § 296-306A-36830, filed 10/31/96, effective 12/1/96.]

WAC 296-307-36833 What requirements apply to multiconductor portable cable? Multiconductor portable cable for use in supplying power to portable or mobile equipment at over 600 volts, nominal, must consist of No. 8 or larger conductors employing flexible stranding. Cables operated at over 2,000 volts must be shielded to confine the voltage stresses to the insulation. Grounding conductors must be provided. Connectors for these cables must be locking with provisions to prevent their opening or closing while energized. Strain relief must be provided at connections and terminations. Portable cables must not be operated with splices unless the splices are permanent molded, vulcanized, or other approved type. Termination enclosures must be suitably marked with a high voltage hazard warning, and terminations must be accessible only to authorized and qualified personnel.

[97-09-013, recodified as § 296-307-36833, filed 4/7/97, effective 4/7/97. Statutory Authority: RCW 49.17.040, [49.17.]050 and [49.17.]060. 96-22-048, § 296-306A-36833, filed 10/31/96, effective 12/1/96.]

WAC 296-307-36836 When may fixture wires be used? (1) A fixture wire must be approved for the voltage, temperature, and location of use. A fixture wire used as a grounded conductor must be identified.

(2) Fixture wires may be used:

(a) For installation in lighting fixtures and in similar equipment where enclosed or protected and not subject to bending or twisting in use; or

(b) For connecting lighting fixtures to the branch-circuit conductors supplying the fixtures.

(3) Fixture wires must not be used as branch-circuit conductors except as permitted for Class 1 power limited circuits.

[97-09-013, recodified as § 296-307-36836, filed 4/7/97, effective 4/7/97. Statutory Authority: RCW 49.17.040, [49.17.]050 and [49.17.]060. 96-22-048, § 296-306A-36836, filed 10/31/96, effective 12/1/96.]

WAC 296-307-36839 What requirements apply to wiring for lighting fixtures, lampholders, lamps, and receptacles? (1) Fixtures, lampholders, lamps, rosettes, and receptacles must have no live parts normally exposed to employee contact. However, rosettes and cleat-type lampholders and receptacles located at least 8 feet above the floor may have exposed parts.

(2) Handlamps of the portable type supplied through flexible cords must have a handle of molded composition or other material approved for the purpose, and a substantial guard must be attached to the lampholder or the handle.

(3) Lampholders of the screw-shell type must be installed for use as lampholders only. Lampholders installed in wet or damp locations must be weatherproof.

(4) Fixtures installed in wet or damp locations must be approved for the purpose and must be constructed or installed so that water cannot enter or accumulate in wireways, lampholders, or other electrical parts.

[97-09-013, recodified as § 296-307-36839, filed 4/7/97, effective 4/7/97. Statutory Authority: RCW 49.17.040, [49.17.]050 and [49.17.]060. 96-22-048, § 296-306A-36839, filed 10/31/96, effective 12/1/96.]

WAC 296-307-36842 What requirements apply to wiring for receptacles, cord connectors, and attachment plugs (caps)? (1) Receptacles, cord connectors, and attachment plugs must be constructed so that no receptacle or cord connector will accept an attachment plug with a different voltage or current rating than that for which the device is intended. However, a 20-ampere T-slot receptacle or cord connector may accept a 15-ampere attachment plug of the same voltage rating.

(2) A receptacle installed in a wet or damp location must be suitable for the location.

[97-09-013, recodified as § 296-307-36842, filed 4/7/97, effective 4/7/97. Statutory Authority: RCW 49.17.040, [49.17.]050 and [49.17.]060. 96-22-048, § 296-306A-36842, filed 10/31/96, effective 12/1/96.]

WAC 296-307-36845 What requirements apply to wiring for appliances? (1) Appliances, other than those in which the current-carrying parts at high temperatures are necessarily exposed, must have no live parts normally exposed to employee contact.

(2) Each appliance must have a disconnecting means.

(3) Each appliance must be marked with its rating in volts and amperes or volts and watts.

[97-09-013, recodified as § 296-307-36845, filed 4/7/97, effective 4/7/97. Statutory Authority: RCW 49.17.040, [49.17.]050 and [49.17.]060. 96-22-048, § 296-306A-36845, filed 10/31/96, effective 12/1/96.]

WAC 296-307-36848 What requirements apply to wiring for motors, motor circuits, and controllers? (1) If specified that one piece of equipment must be "in sight from" another piece of equipment, one shall be visible and not more than 50 feet from the other.

(2) Disconnecting means must meet the following requirements:

(a) A disconnecting means must be located in sight from the controller location. However, a single disconnecting means may be located adjacent to a group of coordinated controllers mounted adjacent to each other or a multimotor continuous process machine. The controller disconnecting means for motor branch circuits over 600 volts, nominal, may be out of sight of the controller, if the controller is marked with a warning label giving the location and identification of the disconnecting means which is to be locked in the open position.

(b) The disconnecting means must disconnect the motor and the controller from all ungrounded supply conductors and must be designed so that no pole can be operated independently.

(c) If a motor and the driven machinery are not in sight from the controller location, the installation must meet one of the following conditions:

(i) The controller disconnecting means must be able to be locked in the open position.

(ii) A manually operable switch that will disconnect the motor from its source of supply must be placed in sight from the motor location.

(d) The disconnecting means must plainly indicate whether it is in the open (off) or closed (on) position.

(e) The disconnecting means must be readily accessible. If more than one disconnect is provided for the same equipment, only one need be readily accessible.

(f) An individual disconnecting means must be provided for each motor, but a single disconnecting means may be used for a group of motors under any of the following conditions:

(i) If a number of motors drive special parts of a single machine or piece of apparatus, such as a metal or woodworking machine, crane, or hoist; or

(ii) If a group of motors is under the protection of one set of branch-circuit protective devices; or

(iii) If a group of motors is in a single room in sight from the location of the disconnecting means.

(3) Motors, motor-control apparatus, and motor branch-circuit conductors must be protected against overheating from motor overloads or failure to start, and against short-circuits or ground faults. Overload protection is not required if it will stop a motor where a shutdown is likely to introduce additional or increased hazards, as in the case of fire pumps, or where continued operation of a motor is necessary for a safe shutdown of equipment or process and motor overload sensing devices are connected to a supervised alarm.

(4) Live parts of all voltages must be protected according to the following:

(a) Stationary motors with commutators, collectors, and brush rigging located inside of motor end brackets and not conductively connected to supply circuits operating at more than 150 volts to ground may have those parts unguarded. Exposed live parts of motors and controllers operating at 50 volts or more between terminals must be guarded against accidental contact by any of the following:

(i) By installation in a room or enclosure that is accessible only to qualified persons;

(ii) By installation on a suitable balcony, gallery, or platform, elevated and arranged to exclude unqualified persons; or

(iii) By elevation 8 feet or more above the floor.

(b) Where live parts of motors or controllers operating at over 150 volts to ground are guarded against accidental contact only by location, and where adjustment or other attendance may be necessary during the operation of the appara-

tus, suitable insulating mats or platforms must be provided so that the attendant cannot readily touch live parts unless standing on the mats or platforms.

[97-09-013, recodified as § 296-307-36848, filed 4/7/97, effective 4/7/97. Statutory Authority: RCW 49.17.040, [49.17.]050 and [49.17.]060. 96-22-048, § 296-306A-36848, filed 10/31/96, effective 12/1/96.]

WAC 296-307-36851 What requirements apply to wiring for transformers? (1) This section applies to the installation of all transformers.

Exception:
(a) Current transformers;
(b) Dry-type transformers installed as a component part of other apparatus;
(c) Transformers that are an integral part of a high frequency or electrostatic-coating apparatus;
(d) Transformers used with Class 2 and Class 3 circuits, sign and outline lighting, electric discharge lighting, and power-limited fire-protective signaling circuits; and
(e) Liquid-filled or dry-type transformers used for research, development, or testing, where effective safeguard arrangements are provided.

(2) The operating voltage of exposed live parts of transformer installations must be indicated by warning signs or visible markings on the equipment or structure.

(3) Dry-type, high fire point liquid-insulated, and askarel-insulated transformers installed indoors and rated over 35kV must be in a vault.

(4) If they present a fire hazard to employees, oil-insulated transformers installed indoors must be in a vault.

(5) Combustible material, combustible buildings and parts of buildings, fire escapes, and door and window openings must be safeguarded from fires that may originate in oil-insulated transformers attached or adjacent to a building or combustible material.

(6) Transformer vaults must be constructed to contain fire and combustible liquids within the vault and to prevent unauthorized access. Locks and latches must be arranged so that a vault door can be readily opened from the inside.

(7) Any pipe or duct system foreign to the vault installation must not enter or pass through a transformer vault.

(8) Materials must not be stored in transformer vaults.

[97-09-013, recodified as § 296-307-36851, filed 4/7/97, effective 4/7/97. Statutory Authority: RCW 49.17.040, [49.17.]050 and [49.17.]060. 96-22-048, § 296-306A-36851, filed 10/31/96, effective 12/1/96.]

WAC 296-307-36854 What requirements apply to wiring for capacitors? (1) All capacitors, except surge capacitors or capacitors included as a component part of other apparatus, must have an automatic means of draining the stored charge after the capacitor is disconnected from its source of supply.

(2) Capacitors rated over 600 volts, nominal, must meet the following additional requirements:

(a) Isolating or disconnecting switches (with no interrupting rating) must be interlocked with the load interrupting device or must have prominently displayed caution signs to prevent switching load current.

(b) For series capacitors, the proper switching must be ensured by any of the following:

(i) Mechanically sequenced isolating and bypass switches;

(ii) Interlocks; or

(iii) Switching procedure prominently displayed at the switching location.

[97-09-013, recodified as § 296-307-36854, filed 4/7/97, effective 4/7/97. Statutory Authority: RCW 49.17.040, [49.17.]050 and [49.17.]060. 96-22-048, § 296-306A-36854, filed 10/31/96, effective 12/1/96.]

WAC 296-307-36857 How must storage batteries be ventilated? You must ensure that there is sufficient diffusion and ventilation of gases from storage batteries to prevent the accumulation of explosive mixtures.

[97-09-013, recodified as § 296-307-36857, filed 4/7/97, effective 4/7/97. Statutory Authority: RCW 49.17.040, [49.17.]050 and [49.17.]060. 96-22-048, § 296-306A-36857, filed 10/31/96, effective 12/1/96.]

WAC 296-307-36860 What other miscellaneous requirements apply to wiring methods? (1) Metal raceways, cable armor, and other metal enclosures for conductors must be metallically joined into a continuous electric conductor and must be connected to all boxes, fittings, and cabinets to provide effective electrical continuity.

(2) All wiring systems are prohibited from being installed in ducts used to transport dust, loose stock or flammable vapors. All wiring system are prohibited from being installed in any duct used for vapor removal or for ventilation of commercial-type cooking equipment, or in any shaft containing only such ducts.

[97-09-013, recodified as § 296-307-36860, filed 4/7/97, effective 4/7/97. Statutory Authority: RCW 49.17.040, [49.17.]050 and [49.17.]060. 96-22-048, § 296-306A-36860, filed 10/31/96, effective 12/1/96.]

WAC 296-307-370 Special purpose equipment and installations.

[97-09-013, recodified as § 296-307-370, filed 4/7/97, effective 4/7/97. Statutory Authority: RCW 49.17.040, [49.17.]050 and [49.17.]060. 96-22-048, § 296-306A-370, filed 10/31/96, effective 12/1/96.]

WAC 296-307-37003 What requirements apply to cranes, hoists, and runways? The installation of electric equipment and wiring used with cranes, monorail hoists, hoists, and all runways must meet the following requirements:

(1) Disconnecting means must meet the following requirements:

(a) A readily accessible disconnecting means is provided between the runway contact conductors and the power supply.

(b) Another disconnecting means, capable of being locked in the open position, is provided in the leads from the runway contact conductors or other power supply on any crane or monorail hoist.

(i) If this additional disconnection means is not readily accessible from the crane or monorail hoist operating station, means is provided at the operating station, to open the power circuit to all motors of the crane or monorail hoist.

(ii) The additional disconnect may be omitted if a monorail hoist or hand-propelled crane bridge installation meets all of the following:

(A) The unit is floor controlled;

(B) The unit is within view of the power supply disconnecting means; and

(C) No fixed work platform has been provided for servicing the unit.

(2) A limit switch or other device shall be provided to prevent the load block from passing the safe upper limit of travel of any hoisting mechanism.

(3) The dimension of the working space in the direction of access to live parts that may require examination, adjustment, servicing, or maintenance while alive must be a minimum of 2 feet 6 inches. Where controls are enclosed in cabinets, the door must either open at least 90 degrees or be removable.

[97-09-013, recodified as § 296-307-37003, filed 4/7/97, effective 4/7/97. Statutory Authority: RCW 49.17.040, [49.17.]050 and [49.17.]060. 96-22-048, § 296-306A-37003, filed 10/31/96, effective 12/1/96.]

WAC 296-307-37006 What requirements apply to elevators, dumbwaiters, escalators, and moving walks? (1) Elevators, dumbwaiters, escalators, and moving walks must have a single means for disconnecting all ungrounded main power supply conductors for each unit.

(2) If interconnections between control panels are necessary for operation of the system on a multicar installation that remains energized from a source other than the disconnecting means, a warning sign must be mounted on or adjacent to the disconnecting means. The sign must be clearly legible and shall read "Warning—Parts of the control panel are not deenergized by this switch."

(3) If control panels are not located in the same space as the drive machine, they must be located in cabinets with doors or panels capable of being locked closed.

[97-09-013, recodified as § 296-307-37006, filed 4/7/97, effective 4/7/97. Statutory Authority: RCW 49.17.040, [49.17.]050 and [49.17.]060. 96-22-048, § 296-306A-37006, filed 10/31/96, effective 12/1/96.]

WAC 296-307-37009 What requirements apply to the disconnecting means for electric welders? (1) A disconnecting means must be provided in the supply circuit for each motor-generator arc welder, and for each AC transformer and DC rectifier arc welder that is not equipped with a disconnect mounted as an integral part of the welder.

(2) A switch or circuit breaker must be provided by which each resistance welder and its control equipment can be isolated from the supply circuit. The ampere rating of this disconnecting means must not be less than the supply conductor ampacity.

[97-09-013, recodified as § 296-307-37009, filed 4/7/97, effective 4/7/97. Statutory Authority: RCW 49.17.040, [49.17.]050 and [49.17.]060. 96-22-048, § 296-306A-37009, filed 10/31/96, effective 12/1/96.]

WAC 296-307-37012 What requirements apply to electrically driven or controlled irrigation machines? (1) If an electrically driven or controlled irrigation machine has a stationary point, a driven ground rod must be connected to the machine at the stationary point for lightning protection.

(2) The main disconnecting means for a center pivot irrigation machine must be located at the point of connection of electrical power to the machine and must be readily accessible and capable of being locked in the open position. A disconnecting means must be provided for each motor and controller.

[97-09-013, recodified as § 296-307-37012, filed 4/7/97, effective 4/7/97. Statutory Authority: RCW 49.17.040, [49.17.]050 and [49.17.]060. 96-22-048, § 296-306A-37012, filed 10/31/96, effective 12/1/96.]

WAC 296-307-372 Hazardous (classified) locations.

[97-09-013, recodified as § 296-307-372, filed 4/7/97, effective 4/7/97. Statutory Authority: RCW 49.17.040, [49.17.]050 and [49.17.]060. 96-22-048, § 296-306A-372, filed 10/31/96, effective 12/1/96.]

WAC 296-307-37203 What does this section cover? WAC 296-307-372 covers the requirements for electric equipment and wiring in locations that are classified based on the properties of the flammable vapors, liquids or gases, or combustible dusts or fibers that may be present and the likelihood that a flammable combustible concentration or quantity is present. Each room, section, or area must be considered individually to determine its classification.

All requirements in this part apply to hazardous locations, unless otherwise indicated.

[Statutory Authority: RCW 49.17.040. 98-24-096, § 296-307-37203, filed 12/1/98, effective 3/1/99. 97-09-013, recodified as § 296-307-37203, filed 4/7/97, effective 4/7/97. Statutory Authority: RCW 49.17.040, [49.17.]050 and [49.17.]060. 96-22-048, § 296-306A-37203, filed 10/31/96, effective 12/1/96.]

WAC 296-307-37206 What classifications apply to this section? These hazardous locations are classified as follows:

(1) "Class I locations" are those in which flammable gases or vapors are or may be present in the air in quantities sufficient to produce explosive or ignitable mixtures. They include the following:

(a) Class I, Division 1 locations are those where:

(i) Hazardous concentrations of flammable gases or vapors may exist under normal operating conditions; or

(ii) Hazardous concentrations of such gases or vapors may exist frequently because of repair or maintenance operations or because of leakage; or

(iii) Breakdown or faulty operation of equipment or processes might release hazardous concentrations of flammable gases or vapors, and might also cause simultaneous failure of electric equipment.

This classification usually includes locations where:

• Volatile flammable liquids or liquefied flammable gases are transferred from one container to another;

• Interiors of spray booths and areas in the vicinity of spraying and painting operations where volatile flammable solvents are used;

• Locations containing open tanks or vats of volatile flammable liquids;

• Drying rooms or compartments for the evaporation of flammable solvents;

• Locations containing fat and oil extraction equipment using volatile flammable solvents;

• Gas generator rooms and other portions of gas manufacturing plants where flammable gas may escape;

• Inadequately ventilated pump rooms for flammable gas or for volatile flammable liquids;

• The interiors of refrigerators and freezers in which volatile flammable materials are stored in open, lightly stoppered, or easily ruptured containers; and

• All other locations where ignitable concentrations of flammable vapors or gases are likely to occur in the course of normal operations.

(b) Class I, Division 2 locations are those where:

(i) Volatile flammable liquids or flammable gases are handled, processed, or used, but in which the hazardous liquids, vapors, or gases are normally confined within closed containers or systems from which they can escape only in an accidental rupture or breakdown of containers or systems, or in case of abnormal operation of equipment; or

(ii) Hazardous concentrations of gases or vapors are normally prevented by positive mechanical ventilation, and which might become hazardous through failure or abnormal operation of the ventilating equipment; or

(iii) They are adjacent to a Class I, Division 1 location, and to which hazardous concentrations of gases or vapors might occasionally be communicated unless prevented by adequate positive-pressure ventilation from a source of clean air, and effective safeguards against ventilation failure are provided.

This classification usually includes locations where:

• Volatile flammable liquids or flammable gases or vapors are used, but which would become hazardous only in case of an accident or unusual operating condition. The quantity of flammable material that might escape in case of accident, the adequacy of ventilating equipment, the total area involved, and the record of the industry or business with respect to explosions or fires are all factors to consider in determining the classification.

• Piping without valves, checks, meters, and similar devices would not ordinarily introduce a hazardous condition even though used for flammable liquids or gases. Locations used for the storage of flammable liquids or a liquefied or compressed gases in sealed containers are not normally considered hazardous unless also subject to other hazardous conditions.

• Electrical conduits and their enclosures separated from process fluids by a single seal or barrier are Division 2 locations if the outside of the conduit and enclosures is a nonhazardous location.

(2) "Class II locations" are those that are hazardous because of the presence of combustible dust. They include the following:

(a) Class II, Division 1 locations are those where:

(i) Combustible dust is or may be suspended in the air under normal operating conditions, in quantities sufficient to produce explosives or ignitable mixtures; or

(ii) Mechanical failure or abnormal operation of machinery or equipment might produce explosive or ignitable, and might also provide a source of ignition through simultaneous failure of electric equipment, operation of protection devices, or from other causes; or

(iii) Combustible dusts of an electrically conductive nature may be present.

This classification may include areas of grain handling and processing plants, starch plants, sugar-pulverizing plants, malting plants, hay-grinding plants, coal pulverizing plants, areas where metal dusts and powders are produced or processed, and other similar locations that contain dust producing machinery and equipment (except where the equipment is dust-tight or vented to the outside). These areas would have combustible dust in the air, under normal operating conditions, in quantities sufficient to produce explosive or ignitable mixtures.

Combustible dusts that are electrically nonconductive include dusts produced in the handling and processing of grain and grain products, pulverized sugar and cocoa, dried egg and milk powders, pulverized spices, starch and pastes, potato and wood flour, oil meal from beans and seed, dried hay, and other organic materials that may produce combustible dusts when processed or handled. Dusts containing magnesium or aluminum are particularly hazardous and the use of extreme caution is necessary to avoid ignition and explosion.

(b) Class II, Division 2 location are those where:

(i) Combustible dust is not normally suspended in the air in quantities sufficient to produce explosive or ignitable mixtures; and dust accumulations are normally insufficient to interfere with the normal operation of electrical equipment or other apparatus; or

(ii) Dust may be in suspension in the air as a result of infrequent malfunctioning of handling or processing equipment, and resulting dust accumulations may be ignitable by abnormal operation or failure of electrical equipment or other apparatus.

This classification includes locations where dangerous concentrations of suspended dust would not be likely but where dust accumulations might form on or in the vicinity of electric equipment. These areas may contain equipment from which appreciable quantities of dust would escape under abnormal operating conditions or be adjacent to a Class II Division 1 location into which an explosive or ignitable concentration of dust may be suspended under abnormal operating conditions.

(3) "Class III locations" are those that are hazardous because of the presence of easily ignitable fibers or flyings but in which such fibers or flyings are not likely to be suspended in the air in quantities sufficient to produce ignitable mixtures. They include the following:

(a) Class III, Division 1 locations are those where easily ignitable fibers or materials producing combustible flyings are handled, manufactured, or used.

Such locations usually include combustible fiber manufacturing and processing plants; cotton gins and cottonseed mills; flax-processing plants; and industries involving similar hazardous processes or conditions.

Easily ignitable fibers and flyings include rayon, cotton (including cotton linters and cotton waste), sisal or henequen, istle, jute, hemp, tow, cocoa fiber, oakum, baled waste kapok, Spanish moss, excelsior, and other materials of similar nature.

(b) Class III, Division 2 locations are those where easily ignitable fibers are stored or handled, except in process of manufacture.

[97-09-013, recodified as § 296-307-37206, filed 4/7/97, effective 4/7/97. Statutory Authority: RCW 49.17.040, [49.17.]050 and [49.17.]060. 96-22-048, § 296-306A-37206, filed 10/31/96, effective 12/1/96.]

WAC 296-307-37209 What equipment, wiring methods, and installations may be used in hazardous locations? Equipment, wiring methods, and installations of equipment in hazardous locations must be intrinsically safe, or approved for the hazardous location, or safe for the hazard-

ous location. Requirements for each of these options are as follows:

(1) Equipment and associated wiring approved as intrinsically safe are permitted in any hazardous location for which it is approved.

(2) Requirements to be approved for the hazardous location:

(a) Equipment must be approved for the class of location and for the ignitable or combustible properties of the specific gas, vapor, dust, or fiber that will be present.

(b) Equipment must be marked to show the class, group, and operating temperature or temperature range, based on operation in a 40 degrees C ambient, for which it is approved. The temperature marking must be a maximum of the ignition temperature of the specific gas or vapor to be encountered. The following provisions apply to specific equipment:

(i) Nonheat-producing equipment, such as junction boxes, conduit, and fittings, and heat-producing equipment with a maximum temperature of 100 degrees C (212 degrees F) need not have a marked operating temperature or temperature range.

(ii) Fixed lighting fixtures marked for use in Class I, Division 2 locations only, need not be marked to indicate the group.

(iii) Fixed general-purpose equipment in Class I locations (other than lighting fixtures) that is acceptable for use in Class I, Division 2 locations need not be marked with the class, group, division, or operating temperature.

(iv) Fixed dust-tight equipment (other than lighting fixtures) that is acceptable for use in Class II, Division 2 and Class III locations need not be marked with the class, group, division, or operating temperature.

(3) Equipment that is safe for the location shall be of a type and design that provides protection from the hazards arising from combustible and flammable vapors, liquids, gases, dusts, or fibers.

Note: Equipment that meets the requirements of The National Electrical Code, NFPA 70, shall be considered in compliance with the requirements of WAC 296-307-372.

[Statutory Authority: RCW 49.17.040. 98-24-096, § 296-307-37209, filed 12/1/98, effective 3/1/99. 97-09-013, recodified as § 296-307-37209, filed 4/7/97, effective 4/7/97. Statutory Authority: RCW 49.17.040, [49.17.]050 and [49.17.]060. 96-22-048, § 296-306A-37209, filed 10/31/96, effective 12/1/96.]

WAC 296-307-37212 How must conduit be installed in hazardous locations? All conduits must be threaded and wrench-tight. Where it is impractical to make a threaded joint tight, a bonding jumper must be used.

[97-09-013, recodified as § 296-307-37212, filed 4/7/97, effective 4/7/97. Statutory Authority: RCW 49.17.040, [49.17.]050 and [49.17.]060. 96-22-048, § 296-306A-37212, filed 10/31/96, effective 12/1/96.]

WAC 296-307-37215 Which equipment may be used in Division 1 and 2 locations? Equipment that has been approved for a Division 1 location may be installed in a Division 2 location of the same class and group. General-purpose equipment or equipment in general-purpose enclosures may be installed in Division 2 locations if the equipment does not constitute a source of ignition under normal operating conditions.

[97-09-013, recodified as § 296-307-37215, filed 4/7/97, effective 4/7/97. Statutory Authority: RCW 49.17.040, [49.17.]050 and [49.17.]060. 96-22-048, § 296-306A-37215, filed 10/31/96, effective 12/1/96.]

WAC 296-307-37218 What requirements apply to motors and generators used in hazardous locations? In Class I, Division 1 locations, motors, generators and other rotating electric machinery must be:

(1) Approved for Class I, Division 1 locations (explosion-proof); or

(2) Of the totally enclosed type supplied with positive-pressure ventilation from a source of clean air with discharge to a safe area, arranged to prevent energizing of the machine until ventilation has been established and the enclosure has been purged with at least 10 volumes of air, and also arranged to automatically deenergize the equipment when the air supply fails; or

(3) Of the totally enclosed inert-gas-filled type supplied with a suitable reliable source of inert gas for pressuring the enclosure, with devices provided to ensure a positive pressure in the enclosure and arranged to automatically deenergize the equipment when the gas supply fails; or

(4) Of a type designed to be submerged in a liquid that is flammable only when vaporized and mixed with air, or in a gas or vapor at a pressure greater than atmospheric and which is flammable only when mixed with air; and the machine is arranged to prevent energizing it until it has been purged with the liquid or gas to exclude air, and also arranged to automatically deenergize the equipment when the supply of liquid, or gas or vapor fails or the pressure is reduced to atmospheric.

Totally enclosed type (2) and (3) motors must have no external surface with a Celsius operating temperature greater than 80% of the ignition temperature of the gas or vapor involved, as determined by ASTM test procedure (Designation: D-2155-69). Appropriate devices must be provided to detect an increase in temperature of the motor beyond design limits and automatically deenergize the equipment or provide an adequate alarm. Auxiliary equipment must be approved for the location in which it is installed.

[97-09-013, recodified as § 296-307-37218, filed 4/7/97, effective 4/7/97. Statutory Authority: RCW 49.17.040, [49.17.]050 and [49.17.]060. 96-22-048, § 296-306A-37218, filed 10/31/96, effective 12/1/96.]

WAC 296-307-374 Special systems.

[97-09-013, recodified as § 296-307-374, filed 4/7/97, effective 4/7/97. Statutory Authority: RCW 49.17.040, [49.17.]050 and [49.17.]060. 96-22-048, § 296-306A-374, filed 10/31/96, effective 12/1/96.]

WAC 296-307-37403 What requirements apply to systems over 600 volts, nominal? (1) Wiring methods for fixed installations over 600 volts, nominal, must meet the following requirements:

(a) Above-ground conductors must be installed in rigid metal conduit, in intermediate metal conduit, in cable trays, in cablebus, in other suitable raceways, or as open runs of metal-clad cable suitable for the use and purpose. Open runs of nonmetallic-sheathed cable or of bare conductors or busbars must be installed in locations accessible only to qualified persons. Metallic shielding components, such as tapes, wires, or braids for conductors, must be grounded. Open runs of insulated wires and cables with a bare lead sheath or a

braided outer covering must be supported to prevent physical damage to the braid or sheath.

(b) Conductors emerging from the ground must be enclosed in approved raceways.

(2) Interrupting and isolating devices must meet the following requirements:

(a) Circuit breaker installations located indoors must consist of metal-enclosed units or fire-resistant cell-mounted units. Circuit breakers must be open mounted only in locations that are accessible only to qualified persons. A means of indicating the open and closed position of circuit breakers must be provided.

(b) Fused cutouts installed in buildings or transformer vaults must be approved for the purpose. They must be readily accessible for fuse replacement.

(c) A means must be provided to completely isolate equipment for inspection and repairs. Isolating means that are not designed to interrupt the load current of the circuit must be either interlocked with an approved circuit interrupter or provided with a sign warning against opening them under load.

(3) Mobile and portable equipment must meet the following requirements:

(a) A metallic enclosure must be provided on the mobile machine for enclosing the terminals of the power cable. The enclosure must include provisions for a solid connection for the ground wire terminal to effectively ground the machine frame. The method of cable termination used must prevent any strain or pull on the cable from stressing the electrical connections. The enclosure must be lockable so only authorized qualified persons may open it and must be marked with a sign warning of the presence of energized parts.

(b) All energized switching and control parts must be enclosed in grounded metal cabinets or enclosures. Circuit breakers and protective equipment must have the operating means projecting through the metal cabinet or enclosure so these units can be reset without opening locked doors. Enclosures and metal cabinets must be locked so that only authorized qualified persons have access and must be marked with a sign warning of the presence of energized parts. Collector ring assemblies on revolving machines (shovels, draglines, etc.,) must be guarded.

(4) Tunnel installations of high-voltage power distribution and utilization equipment that is portable or mobile, such as substations, trailers, cars, mobile shovels, draglines, hoists, drills, dredges, compressors, pumps, conveyors, and underground excavators must meet the following requirements:

(a) Conductors in tunnels must be installed in one or more of the following:

(i) Metal conduit or other metal raceway;

(ii) Type MC cable; or

(iii) Other approved multiconductor cable.

Conductors must also be located or guarded to protect them from physical damage. Multiconductor portable cable may supply mobile equipment. An equipment grounding conductor must be run with circuit conductors inside the metal raceway or inside the multiconductor cable jacket. The equipment grounding conductor may be insulated or bare.

(b) Bare terminals of transformers, switches, motor controllers, and other equipment must be enclosed to prevent accidental contact with energized parts. Enclosures used in tunnels must be drip-proof, weatherproof, or submersible as required by environmental conditions.

(c) A disconnecting means that simultaneously opens all ungrounded conductors must be installed at each transformer or motor location.

(d) All nonenergized metal parts of electric equipment and metal raceways and cable sheaths must be effectively grounded and bonded to all metal pipes and rails at the portal and at maximum intervals of 1000 feet throughout the tunnel.

[97-09-013, recodified as § 296-307-37403, filed 4/7/97, effective 4/7/97. Statutory Authority: RCW 49.17.040, [49.17.]050 and [49.17.]060. 96-22-048, § 296-306A-37403, filed 10/31/96, effective 12/1/96.]

WAC 296-307-37406 What requirements apply to emergency power systems? This section applies to circuits, systems, and equipment intended to supply power for illumination and special loads, in the event of failure of the normal supply.

(1) Emergency circuit wiring must be kept entirely independent of all other wiring and equipment and must not enter the same raceway, cable, box, or cabinet as other wiring.

Exception: This does not apply where common circuit elements suitable for the purpose are required, or for transferring power from the normal to the emergency source.

(2) Where emergency lighting is necessary, the system must be arranged so that the failure of any individual lighting element, such as a burned out light bulb, cannot leave any space in total darkness.

[97-09-013, recodified as § 296-307-37406, filed 4/7/97, effective 4/7/97. Statutory Authority: RCW 49.17.040, [49.17.]050 and [49.17.]060. 96-22-048, § 296-306A-37406, filed 10/31/96, effective 12/1/96.]

WAC 296-307-37409 How are Class 1, Class 2, and Class 3 remote control, signaling, and power-limited circuits classified? (1) Class 1, Class 2, or Class 3 remote control, signaling, or power-limited circuits are characterized by their usage and electrical power limitation which differentiates them from light and power circuits. These circuits are classified according to their voltage and power limitations as follows.

(a) Class 1 circuits.

(i) A Class 1 power-limited circuit is supplied from a source with a maximum rated output of 30 volts and 1000 volt-amperes.

(ii) A Class 1 remote control circuit or a Class 1 signaling circuit has a maximum voltage of 600 volts; however, the power output of the source need not be limited.

(b) Class 2 and Class 3 circuits.

(i) Power for Class 2 and Class 3 circuits is limited either inherently (in which no overcurrent protection is required) or by a combination of a power source and overcurrent protection.

(ii) The maximum circuit voltage is 150 volts AC or DC for a Class 2 inherently limited power source, and 100 volts AC or DC for a Class 3 inherently limited power source.

(iii) The maximum circuit voltage is 30 volts AC and 60 volts DC for a Class 2 power source limited by overcurrent protection, and 150 volts AC or DC for a Class 3 power source limited by overcurrent protection.

(c) The maximum circuit voltages in (a) and (b) of this subsection apply to sinusoidal AC or continuous DC power sources, and where wet contact is unlikely.

(2) A Class 2 or Class 3 power supply unit must be durably and visibly marked to indicate the class of supply and its electrical rating.

[97-09-013, recodified as § 296-307-37409, filed 4/7/97, effective 4/7/97. Statutory Authority: RCW 49.17.040, [49.17.]050 and [49.17.]060. 96-22-048, § 296-306A-37409, filed 10/31/96, effective 12/1/96.]

WAC 296-307-37412 What requirements apply to fire protective signaling systems? (1) Fire protective signaling circuits must be classified either as nonpower limited or power limited.

(2) The power sources for use with fire protective signaling circuits must be either power limited or nonlimited as follows:

(a) The power supply of nonpower-limited fire protective signaling circuits must have a maximum output voltage of 600 volts.

(b) The power for power-limited fire protective signaling circuits must be either inherently limited, in which no overcurrent protection is required, or limited by a combination of power source and overcurrent protection.

(3) Nonpower-limited fire protective signaling circuits and Class 1 circuits may occupy the same enclosure, cable, or raceway if all conductors are insulated for maximum voltage of any conductor within the enclosure, cable or raceway. Power supply and fire protective signaling circuit conductors are permitted in the same enclosure, cable, or raceway only if connected to the same equipment.

(4) Where open conductors are installed, power-limited fire protective signaling circuits must be separated at least 2 inches from conductors of any light, power, Class 1, and nonpower-limited fire protective signaling circuits unless using a special and equally protective method of conductor separation. Cables and conductors of two or more power-limited fire protective signaling circuits or Class 3 circuits are permitted in the same cable, enclosure, or raceway. Conductors of one or more Class 2 circuits are permitted within the same cable, enclosure, or raceway with conductors of power-limited fire protective signaling circuits if the insulation of Class 2 circuit conductors in the cable, enclosure, or raceway is at least that needed for the power-limited fire protective signaling circuits.

(5) Fire protective signaling circuits must be identified at terminal and junction locations in a manner that will prevent unintentional interference with the signaling circuit during testing and servicing. Power-limited fire protective signaling circuits must be visibly and durably marked at terminations.

[97-09-013, recodified as § 296-307-37412, filed 4/7/97, effective 4/7/97. Statutory Authority: RCW 49.17.040, [49.17.]050 and [49.17.]060. 96-22-048, § 296-306A-37412, filed 10/31/96, effective 12/1/96.]

WAC 296-307-376 Working on or near exposed energized parts.

[97-09-013, recodified as § 296-307-376, filed 4/7/97, effective 4/7/97. Statutory Authority: RCW 49.17.040, [49.17.]050 and [49.17.]060. 96-22-048, § 296-306A-376, filed 10/31/96, effective 12/1/96.]

WAC 296-307-37603 What does this section cover? WAC 296-307-376 applies to work performed on exposed live parts (involving either direct contact or contact by means of tools or materials) or near enough to them for employees to be exposed to any hazard they present.

[Statutory Authority: RCW 49.17.040. 98-24-096, § 296-307-37603, filed 12/1/98, effective 3/1/99. 97-09-013, recodified as § 296-307-37603, filed 4/7/97, effective 4/7/97. Statutory Authority: RCW 49.17.040, [49.17.]050 and [49.17.]060. 96-22-048, § 296-306A-37603, filed 10/31/96, effective 12/1/96.]

WAC 296-307-37606 Who may work on energized parts? Only qualified persons may work on electric circuit parts of equipment that have not been deenergized under the procedures of WAC 296-307-37807. Qualified persons must be capable of working safely on energized circuits and must be familiar with the proper use of special precautionary techniques, personal protective equipment, insulating and shielding materials, and insulated tools.

[Statutory Authority: RCW 49.17.040. 98-24-096, § 296-307-37606, filed 12/1/98, effective 3/1/99. 97-09-013, recodified as § 296-307-37606, filed 4/7/97, effective 4/7/97. Statutory Authority: RCW 49.17.040, [49.17.]050 and [49.17.]060. 96-22-048, § 296-306A-37606, filed 10/31/96, effective 12/1/96.]

WAC 296-307-37609 What requirements apply to working near low voltage lines? When employees are working near energized electrical service conductors operating at 750 volts or less, employees must work in a manner to prevent contact with the energized conductors.

[97-09-013, recodified as § 296-307-37609, filed 4/7/97, effective 4/7/97. Statutory Authority: RCW 49.17.040, [49.17.]050 and [49.17.]060. 96-22-048, § 296-306A-37609, filed 10/31/96, effective 12/1/96.]

WAC 296-307-37612 What requirements apply to qualified persons working near overhead lines? When a qualified person is working near overhead lines, whether in an elevated position or on the ground, the person must not approach, or take any conductive object without an approved insulating handle, closer to exposed energized parts than shown in WAC 296-307-150 unless:

(1) The person is insulated from the energized part (gloves, with sleeves if necessary, rated for the voltage involved are considered to be insulation of the person from the energized part on which work is performed); or

(2) The energized part is insulated both from all other conductive objects at a different potential and from the person; or

(3) The person is insulated from all conductive objects at a potential different from that of the energized part.

[Statutory Authority: RCW 49.17.040. 98-24-096, § 296-307-37612, filed 12/1/98, effective 3/1/99. 97-09-013, recodified as § 296-307-37612, filed 4/7/97, effective 4/7/97. Statutory Authority: RCW 49.17.040, [49.17.]050 and [49.17.]060. 96-22-048, § 296-306A-37612, filed 10/31/96, effective 12/1/96.]

WAC 296-307-37615 What requirements apply to vehicles and mechanical equipment near overhead lines? (1) Any vehicle or mechanical equipment that may have parts of its structure elevated near energized overhead lines must be operated so that a clearance of 10 ft. is maintained. If the voltage is higher than 50kV, the clearance must be increased

0.4 inch for every 1kV over the voltage. The clearance may be reduced only if:

(a) The vehicle is in transit with its structure lowered, the clearance may be reduced to 4 ft. If the voltage is higher than 50kV, the clearance must be increased 0.4 inch for every 1kV over that voltage.

(b) Insulating barriers are installed to prevent contact with the lines, and if the barriers are rated for the voltage of the line being guarded and are not a part of or an attachment to the vehicle or its raised structure, the clearance may be reduced to a distance within the designed working dimensions of the insulating barrier.

(2) If the equipment is an aerial lift insulated for the voltage involved, and if the work is performed by a qualified person, the clearance (between the uninsulated portion of the aerial lift and the power line) may be reduced to the distance given in WAC 296-307-150.

(3) Employees standing on the ground must not contact the vehicle or mechanical equipment or any of its attachments, unless:

(a) The employee is using protective equipment rated for the voltage; or

(b) The equipment is located so that no uninsulated part of its structure (that portion of the structure that provides a conductive path to employees on the ground) can come closer to the line than permitted in this section.

(4) If any vehicle or mechanical equipment that may have parts of its structure elevated near energized overhead lines is intentionally grounded, employees working on the ground near the point of grounding must not stand at the grounding location whenever there is a possibility of overhead line contact. Additional precautions, such as the use of barricades or insulation, must be taken to protect employees from hazardous ground potentials, depending on earth resistivity and fault currents, which can develop within the first few feet or more outward from the grounding point.

[Statutory Authority: RCW 49.17.040. 98-24-096, § 296-307-37615, filed 12/1/98, effective 3/1/99. 97-09-013, recodified as § 296-307-37615, filed 4/7/97, effective 4/7/97. Statutory Authority: RCW 49.17.040, [49.17.]050 and [49.17.]060. 96-22-048, § 296-306A-37615, filed 10/31/96, effective 12/1/96.]

WAC 296-307-37618 What lighting must be provided for employees working near exposed energized parts? (1) Employees must not enter spaces containing exposed energized parts, unless lighting is provided that enables the employees to perform the work safely.

(2) Where lack of lighting or an obstruction prevents an employee from seeing the work to be performed, employees must not perform tasks near exposed energized parts. Employees shall not reach blindly into areas that may contain energized parts.

[97-09-013, recodified as § 296-307-37618, filed 4/7/97, effective 4/7/97. Statutory Authority: RCW 49.17.040, [49.17.]050 and [49.17.]060. 96-22-048, § 296-306A-37618, filed 10/31/96, effective 12/1/96.]

WAC 296-307-37621 What requirements apply to working near exposed energized parts in confined spaces? (1) For working in a confined or enclosed space (such as a manhole or vault) that contains exposed energized parts, the employer shall provide, and the employee must use, protective shields, protective barriers, or insulating materials that are necessary to avoid contact with these parts. Doors, hinged panels, and the like must be secured to prevent swinging into an employee and causing the employee to contact exposed energized parts.

(2) Conductive materials and equipment that are in contact with any part of an employee's body shall be handled in a manner that will prevent them from contacting exposed energized conductors or circuit parts. If an employee handles long conductive objects (such as ducts and pipes) in areas with exposed live parts, you must institute work practices (such as the use of insulation, guarding, and material handling techniques) that will minimize the hazard.

(3) Portable ladders must have nonconductive siderails if they are used where the employee or the ladder could contact exposed energized parts.

(4) Conductive articles of jewelry and clothing shall not be worn if they might contact exposed energized parts.

[97-09-013, recodified as § 296-307-37621, filed 4/7/97, effective 4/7/97. Statutory Authority: RCW 49.17.040, [49.17.]050 and [49.17.]060. 96-22-048, § 296-306A-37621, filed 10/31/96, effective 12/1/96.]

WAC 296-307-37624 What housekeeping requirements apply to working near exposed energized parts? (1) Where live parts present an electrical contact hazard, employees must not perform housekeeping duties near enough to the parts that there is a possibility of contact, unless adequate safeguards (such as insulating equipment or barriers) are provided.

(2) Electrically conductive cleaning materials (including conductive solids such as steel wool, metalized cloth, and silicon carbide, as well as conductive liquid solutions) must not be used in proximity to energized parts unless procedures are followed that will prevent electrical contact.

[97-09-013, recodified as § 296-307-37624, filed 4/7/97, effective 4/7/97. Statutory Authority: RCW 49.17.040, [49.17.]050 and [49.17.]060. 96-22-048, § 296-306A-37624, filed 10/31/96, effective 12/1/96.]

WAC 296-307-37627 Who may defeat an electrical safety interlock? Only a qualified person following the requirements of this section may defeat an electrical safety interlock, and then only temporarily while he or she is working on the equipment. The interlock system must be returned to its operable condition when this work is completed.

[97-09-013, recodified as § 296-307-37627, filed 4/7/97, effective 4/7/97. Statutory Authority: RCW 49.17.040, [49.17.]050 and [49.17.]060. 96-22-048, § 296-306A-37627, filed 10/31/96, effective 12/1/96.]

WAC 296-307-378 Safety-related work practices.

[97-09-013, recodified as § 296-307-378, filed 4/7/97, effective 4/7/97. Statutory Authority: RCW 49.17.040, [49.17.]050 and [49.17.]060. 96-22-048, § 296-306A-378, filed 10/31/96, effective 12/1/96.]

WAC 296-307-37801 What does this section cover? (1) WAC 296-307-376 and 296-307-378 cover electrical safety-related work practices for both qualified persons (those who have training in avoiding the electrical hazards of working on or near exposed energized parts) and unqualified persons (those with little or no such training) working on, near, or with the following installations:

(a) Installations of electric conductors and equipment within or on buildings or other structures, and on other premises such as yards, parking, and other lots, and industrial substations;

(b) Installations of conductors that connect to the supply of electricity;

(c) Installations of other outside conductors on the premises; and

(d) Installations of optical fiber cable where such installations are made along with electric conductors.

(2) WAC 296-307-367 and 296-307-378 cover work performed by unqualified persons on, near, or with the installations listed in subsection (3) of this section.

(3) WAC 296-307-376 and 296-307-378 do not apply to work performed by qualified persons on or directly associated with the following installations:

(a) Installations for the generation, control, transformation, transmission, and distribution of electric energy (including communication and metering) located in buildings used for such purposes or located outdoors.

Work on or directly associated with generation, transmission, or distribution installations includes:

(i) Work performed directly on installations, such as repairing distribution lines or repairing a feed-water pump for the boiler in a generating plant.

(ii) Work directly associated with installations, such as line-clearance tree trimming and replacing utility poles.

(iii) Work on electric utilization circuits in a generating plant where:

• The circuits are combined with installations of power generation equipment or circuits; and

• The generation equipment or circuits present greater electrical hazards than those posed by the utilization equipment or circuits (such as exposure to higher voltages or lack of overcurrent protection).

(b) Installations in watercraft, railway rolling stock, aircraft, or automotive vehicles other than mobile homes and recreational vehicles.

(c) Installations of railways for generation, transformation, transmission, or distribution of power used exclusively for operation of rolling stock or installations of railways used exclusively for signaling and communication purposes.

[Statutory Authority: RCW 49.17.040. 98-24-096, § 296-307-37801, filed 12/1/98, effective 3/1/99. 97-09-013, recodified as § 296-307-37801, filed 4/7/97, effective 4/7/97. Statutory Authority: RCW 49.17.040, [49.17.]050 and [49.17.]060. 96-22-048, § 296-306A-37801, filed 10/31/96, effective 12/1/96.]

WAC 296-307-37803 How must employees be trained on safety practices? (1) The training requirements in this section apply to employees who face a risk of electrical shock that is not reduced to a safe level by the electrical installation requirements of WAC 296-307-362 through 296-307-374.

(2) Training contents must include the following:

(a) Employees must be trained in and familiar with the safety-related work practices required by WAC 296-307-376 through 296-307-378 that apply to their job assignments.

(b) Employees who are covered by this section but who are not qualified persons must also be trained in and familiar with any electrically related safety practices that are not covered by this standard, but that are necessary for their safety.

(c) Qualified persons must, at a minimum, be trained in and familiar with the following:

(i) The skills and techniques necessary to distinguish exposed live parts from other parts of electric equipment;

(ii) The skills and techniques necessary to determine the nominal voltage of exposed live parts; and

(iii) The clearance distance specified in WAC 296-307-376 and the corresponding voltages to which the qualified person will be exposed.

Note 1: For the purposes of WAC 296-307-376 and 296-307-378, an employee must have the training required for a qualified person in order to be considered a qualified person.

Note 2: Qualified persons whose work on energized equipment involves either direct contact or contact by means of tools or materials must also have the training needed to meet WAC 296-307-376.

(3) You must provide either classroom or on-the-job training. The degree of training provided must be determined by the risk to the employee.

[Statutory Authority: RCW 49.17.040. 98-24-096, § 296-307-37803, filed 12/1/98, effective 3/1/99. 97-09-013, recodified as § 296-307-37803, filed 4/7/97, effective 4/7/97. Statutory Authority: RCW 49.17.040, [49.17.]050 and [49.17.]060. 96-22-048, § 296-306A-37803, filed 10/31/96, effective 12/1/96.]

WAC 296-307-37805 How must safety-related work practices be chosen and used? Safety-related work practices must be used to prevent electric shock or other injuries resulting from either direct or indirect electrical contacts, when work is performed near or on equipment or circuits that are or may be energized. The specific safety-related work practices must be consistent with the nature and extent of the associated electrical hazards.

(1) When an employee may be exposed to live parts, they must be deenergized before the employee works on or near them, unless deenergizing introduces other hazards or is infeasible due to equipment design or operational limitations. Live parts that operate at less than 50 volts to ground need not be deenergized if there will be no increased exposure to electrical burns or to explosion due to electric arcs.

Note 1: Examples of other hazards include deactivation of emergency alarm systems, shutdown of hazardous location ventilation equipment, or removal of illumination for an area.

Note 2: An example of work that may be performed on or near energized circuit parts because of unfeasibility due to equipment design or operational limitations is testing of electric circuits that can only be performed with the circuit energized.

(2) If the exposed live parts are not deenergized (for reasons of increased or additional hazards or unfeasibility), other safety-related work practices must be used to protect employees who may be exposed to the electrical hazards involved. Such work practices must protect employees against contact with energized circuit parts directly with any part of their body or indirectly through some other conductive object. The work practices must be suitable for the voltage level of the exposed electric conductors or circuit parts.

[97-09-013, recodified as § 296-307-37805, filed 4/7/97, effective 4/7/97. Statutory Authority: RCW 49.17.040, [49.17.]050 and [49.17.]060. 96-22-048, § 296-306A-37805, filed 10/31/96, effective 12/1/96.]

WAC 296-307-37807 What work practices must be followed for work on exposed deenergized parts? (1) This section applies to work on exposed deenergized parts or near enough to them to expose the employee to any electrical hazard they present. Conductors and parts of electric equipment that have been deenergized but have not been locked out or tagged must be treated as energized parts, and WAC 296-307-376 applies to work on or near them.

(2) While any employee is exposed to contact with parts of fixed electric equipment or circuits which have been deenergized, the circuits energizing the parts must be locked out or tagged or both according to the requirements of this section. The requirements must be followed in the order in which they are presented.

"Fixed equipment" means equipment that is fastened or connected by permanent wiring methods.

Note: Lockout and tagging procedures that comply with WAC 296-307-320 will also be deemed to comply with WAC 296-307-37807 through 296-307-37817 if:
• The procedures address the electrical safety hazards covered by this part; and
• The procedures include the requirements of WAC 296-307-37813(4) and 296-307-37815(2).

[Statutory Authority: RCW 49.17.040. 98-24-096, § 296-307-37807, filed 12/1/98, effective 3/1/99. 97-09-013, recodified as § 296-307-37807, filed 4/7/97, effective 4/7/97. Statutory Authority: RCW 49.17.040, [49.17.]050 and [49.17.]060. 96-22-048, § 296-306A-37807, filed 10/31/96, effective 12/1/96.]

WAC 296-307-37809 Must an employer have a written copy of lockout-tagout procedures? The employer must maintain a written copy of the procedures outlined in WAC 296-307-37807 through 296-307-37817 and must make it available for inspection by us or by employees. The written procedures may be in the form of a copy of WAC 296-307-37807 through 296-307-37817.

[Statutory Authority: RCW 49.17.040. 98-24-096, § 296-307-37809, filed 12/1/98, effective 3/1/99. 97-09-013, recodified as § 296-307-37809, filed 4/7/97, effective 4/7/97. Statutory Authority: RCW 49.17.040, [49.17.]050 and [49.17.]060. 96-22-048, § 296-306A-37809, filed 10/31/96, effective 12/1/96.]

WAC 296-307-37811 What work practices must be followed for deenergizing equipment? (1) Safe procedures for deenergizing circuits and equipment must be determined before circuits or equipment are deenergized.

(2) The circuits and equipment to be worked on must be disconnected from all electric energy sources. Control circuit devices, such as push buttons, selector switches, and interlocks, must not be used as the sole means for deenergizing circuits or equipment. Interlocks for electric equipment must not be used as a substitute for lockout and tagging procedures.

(3) Stored electric energy which might endanger employees must be released. Capacitors must be discharged and high capacitance elements must be short-circuited and grounded, if the stored electric energy might endanger employees.

Note: Capacitors or associated equipment handled in meeting this requirement must be treated as energized.

(4) Stored nonelectrical energy in devices that could reenergize electric circuit parts must be blocked or relieved to the extent that the circuit parts could not be accidentally energized by the device.

[97-09-013, recodified as § 296-307-37811, filed 4/7/97, effective 4/7/97. Statutory Authority: RCW 49.17.040, [49.17.]050 and [49.17.]060. 96-22-048, § 296-306A-37811, filed 10/31/96, effective 12/1/96.]

WAC 296-307-37813 How must locks and tags be applied? (1) A lock and a tag must be placed on each disconnecting means used to deenergize circuits and equipment on which work is to be performed, except as provided in subsections (3) and (5) of this section. The lock must be attached to prevent anyone from operating the disconnecting means unless they resort to undue force or the use of tools.

(2) Each tag must have a statement prohibiting unauthorized operation of the disconnecting means and removal of the tag.

(3) If a lock cannot be applied, or if tagging procedures will provide a level of safety equivalent to that obtained by the use of a lock, a tag may be used without a lock.

(4) A tag used without a lock must be supplemented by at least one additional safety measure that provides a level of safety equivalent to that obtained by the use of a lock. Examples of additional safety measures include the removal of an isolating circuit element, blocking of a controlling switch, or opening of an extra disconnecting device.

(5) A lock may be placed without a tag only under the following conditions:

(a) Only one circuit or piece of equipment is deenergized; and

(b) The lockout period does not extend beyond the work shifts; and

(c) Employees exposed to the hazards associated with reenergizing the circuit or equipment are familiar with this procedure.

[97-09-013, recodified as § 296-307-37813, filed 4/7/97, effective 4/7/97. Statutory Authority: RCW 49.17.040, [49.17.]050 and [49.17.]060. 96-22-048, § 296-306A-37813, filed 10/31/96, effective 12/1/96.]

WAC 296-307-37815 What work practices must be followed to verify deenergization? The requirements of this section must be met before any circuits or equipment can be considered and worked as deenergized.

(1) A qualified person must operate the equipment operating controls or otherwise verify that the equipment cannot be restarted.

(2) A qualified person must use test equipment to test the circuit elements and electrical parts of equipment to which employees will be exposed and shall verify that the circuit elements and equipment parts are deenergized. The test must also determine if any energized conditions exists as a result of inadvertently induced voltage or unrelated voltage backfeed even though specific parts of the circuit have been deenergized and presumed to be safe. If the circuit to be tested is over 600 volts, nominal, the test equipment must be checked for proper operation immediately before and immediately after this test.

[97-09-013, recodified as § 296-307-37815, filed 4/7/97, effective 4/7/97. Statutory Authority: RCW 49.17.040, [49.17.]050 and [49.17.]060. 96-22-048, § 296-306A-37815, filed 10/31/96, effective 12/1/96.]

WAC 296-307-37817 What work practices must be followed when reenergizing equipment? These requirements must be met, in the order given, before circuits or equipment are reenergized, even temporarily.

(1) A qualified person must conduct tests and visual inspections as necessary to verify that all tools, electrical jumpers, shorts, grounds, and other devices have been removed, so that the circuits and equipment can be safely energized.

(2) Employees exposed to the hazards associated with reenergizing the circuit or equipment must be warned to stay clear of circuits and equipment.

(3) Each lock and tag must be removed by the employee who applied it or under his or her direct supervision. However, if this employee is absent from the workplace, then the lock or tag must be removed by a qualified person designated to perform this task if:

(a) The employer ensures that the employee who applied the lock or tag is not available at the workplace; and

(b) The employer ensures that the employee is aware that the lock or tag has been removed before resuming work at that workplace.

(4) There shall be a visual determination that all employees are clear of the circuits and equipment.

[97-09-013, recodified as § 296-307-37817, filed 4/7/97, effective 4/7/97. Statutory Authority: RCW 49.17.040, [49.17.]050 and [49.17.]060. 96-22-048, § 296-306A-37817, filed 10/31/96, effective 12/1/96.]

WAC 296-307-37819 What safety-related work practices relate to portable electric equipment? This section applies to using cord-connected and plug-connected equipment, including flexible cord sets (extension cords).

(1) Portable equipment must be handled in a manner that will not cause damage. Flexible electric cords connected to equipment must not be used for raising or lowering the equipment. Flexible cords must not be fastened with staples or otherwise hung in a way that could damage the outer jacket or insulation.

(2) Visual inspection requirements:

(a) Portable cord-connected and plug-connected equipment and flexible cord sets must be visually inspected before use on any shift for external defects (such as loose parts, deformed and missing pins, or damage to outer jackets or insulation) and for evidence of possible internal damage (such as pinched or crushed outer jacket). Cord-connected and plug-connected equipment and flexible cord sets that remain connected once they are in place and are not exposed to damage need not be visually inspected until they are relocated.

(b) If there is a defect or evidence of damage that might expose an employee to injury, the defective or damaged items must be removed from service, and no employee shall use it until repairs and tests necessary to render the equipment safe have been made.

(c) When an attachment plug is to be connected to a receptacle (including any on a cord set), the relationship of the plug and receptacle contacts must first be checked to ensure they are of proper mating configurations.

(3) Requirements for grounding-type equipment:

(a) A flexible cord used with grounding-type equipment must contain an equipment grounding conductor.

(b) Attachment plugs and receptacles must not be connected or altered in a manner that would prevent proper continuity of the equipment grounding conductor at the point where plugs are attached to receptacles. These devices must not be altered to allow the grounding pole of a plug to be inserted into slots intended for connection to the current-carrying conductors.

(c) Adapters that interrupt the continuity of the equipment grounding connection are prohibited.

(4) Portable electric equipment and flexible cords used in highly conductive work locations, or in locations where employees are likely to contact water or conductive liquids, must be approved for those locations.

(5) Connecting attachment plugs.

(a) Employees' hands must not be wet when plugging and unplugging flexible cords and cord-connected and plug-connected equipment, if energized equipment is involved.

(b) Energized plug and receptacle connections must be handled only with insulating protective equipment if the condition of the connection could provide a conducting path to the employee's hand. For example: If a cord connector is wet from being immersed in water.

(c) Locking-type connectors must be properly secured after connection.

[97-09-013, recodified as § 296-307-37819, filed 4/7/97, effective 4/7/97. Statutory Authority: RCW 49.17.040, [49.17.]050 and [49.17.]060. 96-22-048, § 296-306A-37819, filed 10/31/96, effective 12/1/96.]

WAC 296-307-37821 What safety-related work practices relate to electric power and lighting circuits? (1) Load rated switches, circuit breakers, or other devices specifically designed as disconnecting means must be used for the opening, reversing, or closing of circuits under load conditions. Any cable connectors other than the load-break type, fuses, terminal lugs, and cable splice connections are prohibited for such purposes, except in an emergency.

(2) After a circuit is deenergized by a circuit protective device, the circuit must not be manually reenergized until it has been determined that the equipment and circuit can be safety energized. This repetitive manual reclosing of circuit breakers or reenergizing circuits through replaced fuses is prohibited.

Note: When it can be determined from the design of the circuit and the overcurrent devices involved that the automatic operation of a device was caused by an overload rather than a fault connection, no examination of the circuit or connected equipment is needed before the circuit is reenergized.

(3) Overcurrent protection of circuits and conductors must not be modified, even on a temporary basis, beyond that allowed by this part for the installation safety requirements for overcurrent protection.

[97-09-013, recodified as § 296-307-37821, filed 4/7/97, effective 4/7/97. Statutory Authority: RCW 49.17.040, [49.17.]050 and [49.17.]060. 96-22-048, § 296-306A-37821, filed 10/31/96, effective 12/1/96.]

WAC 296-307-37823 What safety-related work practices relate to test instruments and equipment? (1) Only qualified persons may perform testing work on electric circuits or equipment.

(2) Test instruments and equipment and all associated test leads, cables, power cords, probes, and connectors must be visually inspected for external defects and damage before the equipment is used. If there is a defect or evidence of damage that might expose an employee to injury, the defective or damaged item must be removed from service, and no employee may use it until necessary repairs and tests to render the equipment safe have been made.

(3) Test instruments and equipment and their accessories must be rated for the circuits and equipment to which they will be connected and must be designed for the environment in which they will be used.

[97-09-013, recodified as § 296-307-37823, filed 4/7/97, effective 4/7/97. Statutory Authority: RCW 49.17.040, [49.17.]050 and [49.17.]060. 96-22-048, § 296-306A-37823, filed 10/31/96, effective 12/1/96.]

WAC 296-307-37825 What safety-related work practices relate to flammable materials? Where flammable materials are present only occasionally, electric equipment capable of igniting them must not be used, unless measures are taken to prevent hazardous conditions from developing.

Such materials include, but are not limited to: Flammable gases, vapors, or liquids; combustible dust; and ignitable fibers or flyings.

Note: Electrical installation requirements for locations where flammable materials are present on a regular basis are contained in WAC 296-307-372.

[Statutory Authority: RCW 49.17.040. 98-24-096, § 296-307-37825, filed 12/1/98, effective 3/1/99. 97-09-013, recodified as § 296-307-37825, filed 4/7/97, effective 4/7/97. Statutory Authority: RCW 49.17.040, [49.17.]050 and [49.17.]060. 96-22-048, § 296-306A-37825, filed 10/31/96, effective 12/1/96.]

WAC 296-307-380 Electrical protective equipment.

[97-09-013, recodified as § 296-307-380, filed 4/7/97, effective 4/7/97. Statutory Authority: RCW 49.17.040, [49.17.]050 and [49.17.]060. 96-22-048, § 296-306A-380, filed 10/31/96, effective 12/1/96.]

WAC 296-307-38003 How must protective equipment be used? (1) Employees working in the areas where there are potential electrical hazards must have and use electrical protective equipment that is appropriate for the specific parts of the body to be protected and for the work to be performed.

(2) If the insulating capability of protective equipment may be subject to damage during use, the insulating material must be protected.

For example: An outer covering of leather is sometimes used to protect rubber insulating material.

(3) Employees must wear nonconductive head protection wherever there is a danger of head injury from electric shock or burns due to contact with exposed energized parts.

(4) Employees must wear protective equipment for the eyes or face wherever there is danger of injury to the eyes or face from electrical arcs or flashes or from flying objects resulting from electrical explosion.

[97-09-013, recodified as § 296-307-38003, filed 4/7/97, effective 4/7/97. Statutory Authority: RCW 49.17.040, [49.17.]050 and [49.17.]060. 96-22-048, § 296-306A-38003, filed 10/31/96, effective 12/1/96.]

WAC 296-307-38006 What requirements apply to general protective equipment and tools? (1) When working near exposed energized conductors or circuit parts, each employee must use insulated tools or handling equipment if the tools or handling equipment might make contact with such conductors or parts. If the insulating capability of insulated tools or handling equipment is subject to damage, the insulating material must be protected.

(2) Ropes and handlines used near exposed energized parts must be nonconductive.

(3) Protective shields, protective barriers, or insulating materials must be used to protect each employee from shock, burns, or other electrically related injuries while that employee is working near exposed energized parts that might be accidentally contacted or where dangerous electric heating or arcing might occur. When normally enclosed live parts are exposed for maintenance or repair, they must be guarded to protect unqualified persons from contact with the live parts.

(4) Altering techniques must be used to warn and protect employees from hazards that could cause injury due to electric shock, burns, or failure of electric equipment parts.

(5) Safety signs, safety symbols, or accident prevention tags must be used where necessary to warn employees about electrical hazards that may endanger them, as required by WAC 296-307-330.

[Statutory Authority: RCW 49.17.040. 98-24-096, § 296-307-38006, filed 12/1/98, effective 3/1/99. 97-09-013, recodified as § 296-307-38006, filed 4/7/97, effective 4/7/97. Statutory Authority: RCW 49.17.040, [49.17.]050 and [49.17.]060. 96-22-048, § 296-306A-38006, filed 10/31/96, effective 12/1/96.]

WAC 296-307-38009 What manufacturing and marking requirements apply to electrical protective devices? Insulating blankets, matting, covers, line hose, gloves, and sleeves made of rubber must meet the following manufacture and marking requirements:

(1) Blankets, gloves, and sleeves must be produced by a seamless process.

(2) Each item must be clearly marked as follows:

(a) All classified equipment must be marked with its class number.

(b) Nonozone-resistant equipment other than matting must be marked Type I.

(c) Ozone-resistant equipment other than matting must be marked Type II.

(d) Other relevant markings, such as the manufacturer's identification and the size of the equipment, may also be provided.

(3) Markings must be nonconducting and shall be applied so they do not impair the insulating qualities of the equipment.

(4) Markings on gloves must be on the cuff.

[97-09-013, recodified as § 296-307-38009, filed 4/7/97, effective 4/7/97. Statutory Authority: RCW 49.17.040, [49.17.]050 and [49.17.]060. 96-22-048, § 296-306A-38009, filed 10/31/96, effective 12/1/96.]

WAC 296-307-38012 What electrical requirements apply to electrical protective devices? Insulating blankets, matting, covers, line hose, gloves, and sleeves made of rubber must meet the following electrical requirements:

(1) Equipment must be capable of withstanding the a-c proof-test voltage specified in Table 1 or the d-c proof-test voltage specified in Table 2.

(a) The proof-test must reliably indicate that the equipment can withstand the voltage involved.

(b) The test voltage must be applied continuously for three minutes for equipment other than matting and must be applied continuously for one minute for matting.

(c) Gloves must also be capable of withstanding the a-c proof-test voltage specified in Table 1 after a sixteen-hour water soak.

(2) When the a-c proof-test is used on gloves, the 60 hertz proof-test current must not exceed the values specified in Table 1 at any time during the test period.

(a) If the a-c proof-test is made at a frequency other than 60 hertz, the permissible proof-test current must be computed from the direct ratio of the frequencies.

(b) For the test, gloves (right side out) must be filled with tap water and immersed in water to a depth that is in accordance with Table 3. Water must be added to or removed from the glove, as necessary, so that the water level is the same inside and outside the glove.

(c) After the sixteen-hour water soak, the 60 hertz proof-test current may exceed the values given in Table 1 by not more than 2 milliamperes.

(3) Equipment that has been subjected to a minimum breakdown voltage test must not be used for electrical protection.

(4) Material used for Type II insulating equipment must be capable of withstanding an ozone test, with no visible effects. The ozone test must reliably indicate that the material will resist ozone exposure in actual use. Any visible signs of ozone deterioration of the material, such as checking, cracking, breaks, or pitting, is evidence of failure to meet the requirements for ozone-resistant material.

Note: Rubber insulating equipment meeting the following national consensus standards is considered to be in compliance with WAC 296-307-38009, 296-307-38012, and 296-307-38015:

- American Society for Testing and Materials (ASTM) D 120-87, Specification for Rubber Insulating Gloves.
- ASTM D 178-93, Specification for Rubber Insulating Matting.
- ASTM D 1048-93, Specification for Rubber Insulating Blankets.
- ASTM D 1049-93, Specification for Rubber Insulating Covers.
- ASTM D 1050-90, Specification for Rubber Insulating Line Hose.
- ASTM D 1051-87, Specification for Rubber Insulating Sleeves.

These standards contain specifications for conducting the tests required in this section.

[Statutory Authority: RCW 49.17.040. 98-24-096, § 296-307-38012, filed 12/1/98, effective 3/1/99. 97-09-013, recodified as § 296-307-38012, filed 4/7/97, effective 4/7/97. Statutory Authority: RCW 49.17.040, [49.17.]050 and [49.17.]060. 96-22-048, § 296-306A-38012, filed 10/31/96, effective 12/1/96.]

WAC 296-307-38015 What workmanship and finish requirements apply to electrical protective devices? Insulating blankets, matting, covers, line hose, gloves, and sleeves made of rubber must meet the following workmanship and finish requirements:

(1) Equipment must be free of harmful physical irregularities that can be detected by the tests or inspections required in WAC 296-307-38012.

(2) Surface irregularities that may be present on all rubber goods because of imperfections on forms or molds or because of inherent difficulties in the manufacturing process and that may appear as indentations, protuberances, or imbedded foreign material are acceptable if:

(a) The indentation or protuberance blends into a smooth slope when the material is stretched.

(b) Foreign material remains in place when the insulating material is folded and stretches with the insulating material surrounding it.

[Statutory Authority: RCW 49.17.040. 98-24-096, § 296-307-38015, filed 12/1/98, effective 3/1/99. 97-09-013, recodified as § 296-307-38015, filed 4/7/97, effective 4/7/97. Statutory Authority: RCW 49.17.040, [49.17.]050 and [49.17.]060. 96-22-048, § 296-306A-38015, filed 10/31/96, effective 12/1/96.]

WAC 296-307-38018 How must electrical protective devices be maintained and used? (1) Electrical protective equipment must be maintained in a safe, reliable condition.

(2) The following specific requirements apply to insulating blankets, covers, line hose, gloves, and sleeves made of rubber:

(a) Maximum use voltages must meet the requirements in Table 4.

(b) Insulating equipment must be inspected for damage before each day's use and immediately following any incident that can reasonably be suspected of having caused damage. Insulating gloves must be given an air test, along with the inspection.

(c) Insulating equipment with any of the following defects must not be used:

(i) A hole, tear, puncture, or cut;

(ii) Ozone cutting or ozone checking (the cutting action produced by ozone on rubber under mechanical stress into a series of interlacing cracks);

(iii) An embedded foreign object;

(iv) Any of the following texture changes: Swelling, softening, hardening, or becoming sticky or inelastic;

(v) Any other defect that damages the insulating properties.

(d) Insulating equipment found to have other defects that might affect its insulating properties must be removed from service and returned for testing under (h) of this subsection.

(e) Insulating equipment must be cleaned as needed to remove foreign substances.

(f) Insulating equipment must be stored in such a location and in such a manner as to protect it from light, temperature extremes, excessive humidity, ozone, and other injurious substances and conditions.

(g) Protector gloves must be worn over insulating gloves.

(h) Electrical protective equipment must be subjected to periodic electrical tests. Test voltages and the maximum intervals between tests must be according to Table 4 and Table 5.

(i) The test method used must reliably indicate whether the insulating equipment can withstand the voltages involved.

Note: Standard electrical test methods considered as meeting this requirement are given in the following national consensus standards:
- American Society for Testing and Materials (ASTM) D 120-87, Specification for Rubber Insulating Gloves.
- ASTM D 1048-93, Specification for Rubber Insulating Blankets.
- ASTM D 1049-93, Specification for Rubber Insulating Covers.
- ASTM D 1050-90, Specification for Rubber Insulating Line Hose.
- ASTM D 1051-87, Specification for Rubber Insulating Sleeves.
- ASTM F 478-92, Specification for In-Service Care of Insulating Line Hose and Covers.
- ASTM F 479-88a, Specification for In-Service Care of Insulating Blankets.
- ASTM F 496-93b, Specification for In-Service Care of Insulating Gloves and Sleeves.

(j) Insulating equipment that fails inspections or electrical tests must not be used by employees, except as follows:

(i) Rubber insulating line hose could be used in shorter lengths with the defective portion cut off.

(ii) Rubber insulating blankets could be repaired using a compatible patch that results in physical and electrical properties equal to those of the blanket.

(iii) Rubber insulating blankets could be salvaged by severing the defective area from the undamaged portion of the blanket. The resulting undamaged area must not be smaller than twenty-two inches by twenty-two inches (560 mm by 560 mm) for Class 1, 2, 3, and 4 blankets.

(k) Repaired insulating equipment must be retested before it may be used by employees.

(l) You must certify that equipment has been tested in accordance with the requirements of (h), (i), and (k) of this subsection. The certification must identify the equipment that passed the test and the date it was tested.

Note: This requirement may be met by marking the equipment and entering the results of the tests and the dates of testing onto logs.

Table 1
A-C Proof-Test Requirements
Maximum proof-test current, mA (gloves only)

Class of equipment	Proof-test voltage rms V	267 mm (10.5 in.) glove	356 mm (14 in.) glove	406 mm (16 in.) glove	457 mm (18 in.) glove
0	5,000	8	12	14	16
1	10,000		14	16	18
2	20,000		16	18	20
3	30,000		18	20	22
4	40,000			22	24

Table 2
D-C Proof-Test Requirements

Class of Equipment	Proof-test voltage
0	20,000
1	40,000
2	50,000
3	60,000
4	70,000

Note: The d-c voltages listed in this table are not appropriate for proof testing rubber insulating line hose or covers. For this equipment, d-c proof-tests shall use a voltage high enough to indicate that the equipment can be safely used at the voltages listed in Table 3. See ASTM D 1050-90 and ASTM D 1049-88 for further information on proof tests for rubber insulating line hose and covers.

Table 3
Glove Tests-Water Level[1, 2]

	A-C proof-test		D-C proof-test	
Class of glove	mm.	in.	mm.	in.
0	38	1.5	38	1.5
1	38	1.5	51	2.0
2	64	2.5	76	3.0
3	89	3.5	102	4.0
4	127	5.0	153	6.0

[1]The water level is given as the clearance from the cuff of the glove to the water line, with a tolerance of 13 mm. (0.5 in.).
[2]If atmospheric conditions make the specified clearances impractical, the clearances may be increased by a maximum of 25 mm. (1 in.)

Table 4
Rubber Insulating Equipment
Voltage Requirements

Class of equipment	Maximum use voltage[1] a-c-rms	Retest voltage[2] a-c-rms	Retest voltage[2] d-c-rms
0	1,000	5,000	20,000
1	7,500	10,000	40,000
2	17,000	20,000	50,000
3	26,500	30,000	60,000
4	36,000	40,000	70,000

Note: Rubber gloves shall only be used on voltages of 5000 volts phase to phase or less.

[1]The maximum use voltage is the a-c voltage (rms) classification of the protective equipment that designates the maximum nominal design/voltage of the energized system that may be safely worked. The nominal voltage design is equal to the phase-to-phase voltage on multiphase circuits. However, the phase-to-ground potential is considered to be the nominal design/voltage:

(a) If there is no multiphase exposure in a system area and if the voltage exposure is limited to the phase-to-ground potential, or

(b) If the electrical equipment and devices are insulated or isolated or both so that the multiphase exposure on a grounded wye circuit is removed.

[2]The proof-test voltage shall be applied continuously for at least one minute, but no more than three minutes.

Table 5
Rubber Insulating Equipment Test Intervals

Type of equipment	When to test
Rubber insulating line hose	Upon indication that insulating value is suspect
Rubber insulating covers	Upon indication that insulating value is suspect
Rubber insulating blankets	Before first issue and every 12 months thereafter
Rubber insulating gloves	Before first issue and every 6 months thereafter
Rubber insulating sleeves	Before first issue and every 12 months thereafter

(3) Where switches or fuses of more than 150 volts to ground are not guarded during ordinary operations, suitable insulating floors, mats or platforms must be provided on which the operator must stand while handling the switches.

[97-09-013, recodified as § 296-307-38018, filed 4/7/97, effective 4/7/97. Statutory Authority: RCW 49.17.040, [49.17.]050 and [49.17.]060. 96-22-048, § 296-306A-38018, filed 10/31/96, effective 12/1/96.]

SPECIALIZED OPERATIONS

Part U-1
Hazardous Materials—Anhydrous Ammonia

WAC 296-307-400 Anhydrous ammonia.

[97-09-013, recodified as § 296-307-400, filed 4/7/97, effective 4/7/97. Statutory Authority: RCW 49.17.040, [49.17.]050 and [49.17.]060. 96-22-048, § 296-306A-400, filed 10/31/96, effective 12/1/96.]

WAC 296-307-40001 What does this section cover? WAC 296-307-400 covers the transportation and application of anhydrous ammonia.

[Statutory Authority: RCW 49.17.040. 98-24-096, § 296-307-40001, filed 12/1/98, effective 3/1/99. 97-09-013, recodified as § 296-307-40001, filed 4/7/97, effective 4/7/97. Statutory Authority: RCW 49.17.040, [49.17.]050 and [49.17.]060. 96-22-048, § 296-306A-40001, filed 10/31/96, effective 12/1/96.]

WAC 296-307-40003 What definitions apply to this section? "Certified" means the equipment has been tested by a nationally recognized testing laboratory and meets nationally recognized standards or is safe for a specific use; or is a kind whose production is periodically inspected by a nationally recognized testing laboratory, and bears identification of certification.

"DOT" means the Federal Department of Transportation.

"DOT container" means a container constructed according to the requirements of 49 CFR chapter 1.

"DOT cylinder" means a cylinder that meets the requirements of 49 CFR chapter I.

"Labeled" means the equipment has an attached label, symbol, or other identifying mark of a nationally recognized testing laboratory that makes periodic inspections of the production of such equipment, and the label indicates compliance with nationally recognized standards or tests.

[97-09-013, recodified as § 296-307-40003, filed 4/7/97, effective 4/7/97. Statutory Authority: RCW 49.17.040, [49.17.]050 and [49.17.]060. 96-22-048, § 296-306A-40003, filed 10/31/96, effective 12/1/96.]

WAC 296-307-40005 What general requirements apply to the storage and handling of anhydrous ammonia? (1) All employees must use at least gloves and goggles and may supplement with a face shield while working on or with charged anhydrous ammonia equipment.

(2) You must ensure that equipment is inspected before each day's work. Conditions that would contribute to leaks shall be corrected.

(3) Hose end-valves must be closed when not in use to prevent accidental discharge in case the main valve is opened.

(4) Relief and vapor valves must discharge away from the operator's working position.

[Statutory Authority: RCW 49.17.040. 98-24-096, § 296-307-40005, filed 12/1/98, effective 3/1/99. 97-09-013, recodified as § 296-307-40005, filed 4/7/97, effective 4/7/97. Statutory Authority: RCW 49.17.040, [49.17.]050

and [49.17.]060. 96-22-048, § 296-306A-40005, filed 10/31/96, effective 12/1/96.]

WAC 296-307-40007 What requirements apply to systems mounted on farm wagons (implements of husbandry) for the transportation of ammonia? All anhydrous ammonia containers with a capacity of 3,000 gallons or less and equipment mounted on farm wagons (implements of husbandry) that is used to transport ammonia must meet the requirements of this section.

WAC 296-307-40011 through 296-307-40037 also apply unless otherwise noted.

(1) Containers must meet the following mounting requirements:

(a) The farm wagon or container has a stop so the container does not dislodge from its mounting when a farm wagon stops suddenly.

(b) The container is anchored to the farm wagon at one or more places on each side of the container.

(c) The weight of containers mounted on four-wheel farm wagons, is distributed evenly over both axles.

(d) When the cradle and the container are not welded together, material between them eliminates metal-to-metal friction.

(2) Container accessories must meet the following requirements:

(a) Each container has a fixed maximum liquid-level gauge.

(b) All containers with more than 250-gallon capacity have a pressure gauge with a dial graduated from 0-400 psi.

(c) The filling connection is fitted with one of the following:

(i) A combination back-pressure check valve and excess-flow valve; or

(ii) One double or two single back-pressure check valves; or

(iii) A positive shut-off valve that has either an internal back-pressure check valve or an internal excess flow valve.

(d) All containers with more than 250-gallon capacity are equipped for spray loading or with an approved vapor return valve.

(e) All vapor and liquid connections have approved excess flow valves or quick-closing internal valves that are only open for operating.

Exception: Safety-relief valves and connections that are specifically exempted by WAC 296-307-40019(5) are exempt from this requirement.

(f) Fittings are protected from physical damage by a rigid guard. The guard is designed to withstand force from any direction, equal to twice the weight of the container and lading, at a safety factor of four. If the guard is fully enclosed, the safety-relief valves are properly vented through the guard.

(g) If a liquid withdrawal line is installed in the bottom of a container, the connections and hose are at least as high as the lowest horizontal edge of the farm wagon axle.

(h) Both ends of the hose are secure while in transit.

(3) Each side and the rear end of the container must be marked in letters at least four inches high, with the words "ANHYDROUS AMMONIA" or, "CAUTION—AMMONIA," or marked according to DOT regulations.

(4) Farm wagons (implements of husbandry) must meet all state regulations and the following requirements:

(a) All farm wagons must be securely attached to the vehicle drawing them by drawbars with safety chains.

(b) A farm wagon must be constructed so that it will follow the path of the towing vehicle and will prevent the towed wagon from whipping or swerving dangerously from side to side.

(c) All farm wagons must have five gallons or more of readily available clean water.

[Statutory Authority: RCW 49.17.040. 98-24-096, § 296-307-40007, filed 12/1/98, effective 3/1/99. 97-09-013, recodified as § 296-307-40007, filed 4/7/97, effective 4/7/97. Statutory Authority: RCW 49.17.040, [49.17.]050 and [49.17.]060. 96-22-048, § 296-306A-40007, filed 10/31/96, effective 12/1/96.]

WAC 296-307-40009 What requirements apply to systems mounted on farm wagons (implements of husbandry) for the application of ammonia? This section applies to systems mounted on farm equipment that are used for the field application of ammonia.

WAC 296-307-40011 through 296-307-40037 also apply unless otherwise noted.

(1) All containers must be securely mounted.

(2) Container valves and accessories must meet the following requirements:

(a) Each container has a fixed maximum liquid-level gauge.

(b) The filling connection is fitted with one of the following:

(i) A combination back-pressure check valve and excess-flow valve; or

(ii) One double or two single back-pressure check valves; or

(iii) A positive shut-off valve that has either an internal back-pressure check valve or an internal excess flow valve.

(c) An excess-flow valve is not required in the vapor connection if the controlling orifice is a maximum of 7/16 inch in diameter and the valve is a hand-operated shut-off valve. To assist in filling applicator tanks, you may bleed vapors to the open air, if this requirement is met.

(d) Metering devices may be connected directly to the tank withdrawal valve. You may use a union type connection between the tank valve and metering device. You may use remote mounting of metering devices if the hose meets the requirements of Appendix B. When the applicator tank is trailed and the metering device is remotely mounted, such as on the tractor tool bar, you must use an automatic break-away type, self-closing coupling.

(e) No excess-flow valve is required in the liquid withdrawal line if the controlling orifice between the contents of the container and the outlet of the shut-off valve is a maximum of 7/16 inch in diameter.

[Statutory Authority: RCW 49.17.040. 98-24-096, § 296-307-40009, filed 12/1/98, effective 3/1/99. 97-09-013, recodified as § 296-307-40009, filed 4/7/97, effective 4/7/97. Statutory Authority: RCW 49.17.040, [49.17.]050 and [49.17.]060. 96-22-048, § 296-306A-40009, filed 10/31/96, effective 12/1/96.]

WAC 296-307-40011 What requirements must approved anhydrous ammonia equipment meet? All equipment must be approved by one of the following methods:

(1) The equipment was installed before February 8, 1973, and was approved and tested, and installed according to either the requirements of the American National Standard for the Storage and Handling of Anhydrous Ammonia, K61.1, or the Fertilizer Institute Standards for the Storage and Handling of Agricultural Anhydrous Ammonia, M-1, in effect at the time of installation; or

(2) The equipment is accepted, or certified, or listed, or labeled, or otherwise determined to be safe by a nationally recognized testing laboratory; or

(3)(a) The equipment is a type that no nationally recognized testing laboratory accepts, certifies, lists, labels, or determines to be safe; and

(b) The equipment is inspected or tested by an authority responsible for enforcing occupational safety provisions of a law, code, or regulation pertaining to the storage, handling, transport, and use of anhydrous ammonia; and

(c) The equipment is found in compliance with either the requirements of the American National Standard for the Storage and Handling of Anhydrous Ammonia, K61.1, or the Fertilizer Institute Standards for the Storage and Handling of Agricultural Anhydrous Ammonia, M-1, in effect at the time of installation; or

(4) For a custom-designed and custom-built unit:

(a) You cannot find a nationally recognized testing laboratory or authority responsible for the enforcement of a law, code or regulation pertaining to the storage, transportation and use of anhydrous ammonia that is willing to accept, certify, list, label or determine to be safe your custom equipment; and

(b) You have on file a document attesting to its safe condition following appropriate tests. The document must be signed by a registered professional engineer or qualified person. The document must describe the test bases, test data and results, and also the qualifications of the certifying person.

[97-09-013, recodified as § 296-307-40011, filed 4/7/97, effective 4/7/97. Statutory Authority: RCW 49.17.040, [49.17.]050 and [49.17.]060. 96-22-048, § 296-306A-40011, filed 10/31/96, effective 12/1/96.]

WAC 296-307-40013 What requirements apply to the construction, original test, and requalification of nonrefrigerated containers? The code is the Unfired Pressure Vessel Code of the American Society of Mechanical Engineers (Section VIII of the ASME Boiler Construction Code), 1952, 1956, 1959, 1962, 1965, 1968 and 1971 editions, the joint code of the American Petroleum Institute and the American Society of Mechanical Engineers (API-ASME Code) 1951 edition, and amendments or later editions, as adopted.

(1) Containers used with systems covered in WAC 296-307-40005 and 296-307-40007 must be constructed and tested according to the code.

Exception: Construction under Table UW-12 at a basic joint efficiency of under 80% is prohibited. Containers built according to code are exempt from paragraphs UG-125 to UG-128, inclusive, and paragraphs UG-132 and UG-133 of the code.

Note: This subsection allows the continued use or reinstallation of containers constructed and maintained according to the 1949, 1950, 1952, 1956, 1959, 1962, 1965 and 1968 editions of the Unfired Pressure Vessel Code of the ASME or any revisions thereof in effect at the time of fabrication.

(2) Containers more than 36 inches in diameter or 250 gallons water capacity must be constructed to meet one or more of the following requirements:

(a) Containers must be stress relieved after fabrication according to the code; or

(b) Cold-formed heads, when used, must be stress relieved; or

(c) Hot-formed heads must be used.

(3) Welding to the shell, head, or any other part of the container subject to internal pressure must be according to the code. Other welding is permitted only on saddle plates, lugs, or brackets attached to the container by the container manufacturer.

Containers used with systems covered in subsection (4) of this section must be constructed and tested in accordance with the DOT specifications.

(4) Containers must comply with department of transportation specifications and must be maintained, filed, packaged, marked, labeled and shipped to comply with current DOT regulations and American National Standard Method of Marking Portable Compressed Gas Containers to Identify the Material Contained, Z48.1-1954 R1970. See Appendix C for availability.

[Statutory Authority: RCW 49.17.010, 49.17.040, 49.17.050, and 49.17.060. 03-10-068, § 296-307-40013, filed 5/6/03, effective 8/1/03. Statutory Authority: RCW 49.17.040. 98-24-096, § 296-307-40013, filed 12/1/98, effective 3/1/99. 97-09-013, recodified as § 296-307-40013, filed 4/7/97, effective 4/7/97. Statutory Authority: RCW 49.17.040, [49.17.]050 and [49.17.]060. 96-22-048, § 296-306A-40013, filed 10/31/96, effective 12/1/96.]

WAC 296-307-40015 How must nonrefrigerated containers and systems (other than DOT containers) be marked? (1) System nameplates, when required, must be permanently attached to the system so they are readily accessible for inspection.

(2) Each container or system covered in WAC 296-307-40005 and 296-307-40007 must be marked as follows:

(a) With indication that the container or system meets the requirements of the code under which the container is constructed.

(b) With indication on the container and system nameplate when the system is designed for underground installation.

(c) With the name and address of the supplier of the container or the trade name of the container and with the date of fabrication.

(d) With the water capacity of the container in pounds at 60°F or gallons, United States standard.

(e) With the design pressure in pounds per square inch gauge.

(f) With the wall thickness of the shell and heads.

(g) With indication of the maximum fill level for liquid anhydrous ammonia between 20°F and 100°F. Markings must be in increments of not more than 20°F.

Exception: Containers with fixed maximum level indicators, such as fixed length dip tubes, or containers that are filled by weight are exempt from this requirement.

(h) With the outside surface area in square feet.

(i) With minimum temperature in Fahrenheit for which the container is designed.

(j) The marking must be on the container itself or on a permanently attached nameplate.

(3) All main operating valves on permanently installed containers with a capacity of over 3,000 water gallons must be identified to show whether the valve is in liquid or vapor service. The valve must be identified as follows:

(a) The word LIQUID (or LIQUID VALVE), VAPOR (or VAPOR VALVE), as appropriate, must be placed on or within twelve inches of the valve by means of a stencil tag or decal.

(b) Liquid valves must be painted orange and vapor valves must be painted yellow. The legend ORANGE-LIQUID, YELLOW-VAPOR must be displayed in one or more conspicuous places at each permanent storage location. The legend must have letters at least two inches high and must be placed against a contrasting background.

(4) "Marking refrigerated containers." Each refrigerated container must be marked with a name plate on the outer covering in an accessible place as specified in the following:

• With the notation, "Anhydrous Ammonia"

• With the name and address of the builder and the date of fabrication

• With the water capacity of the container in gallons, U.S. Standard

• With the design pressure

• With the minimum temperature in degrees Fahrenheit for which the container was designed

• The maximum allowable water level to which the container may be filled for test purposes

• With the density of the product in pounds per cubic foot for which the container was designed

• With the maximum level to which the container may be filled with liquid anhydrous ammonia.

[Statutory Authority: RCW 49.17.010, 49.17.040, 49.17.050, and 49.17.060. 03-10-068, § 296-307-40015, filed 5/6/03, effective 8/1/03. Statutory Authority: RCW 49.17.040. 98-24-096, § 296-307-40015, filed 12/1/98, effective 3/1/99. 97-09-013, recodified as § 296-307-40015, filed 4/7/97, effective 4/7/97. Statutory Authority: RCW 49.17.040, [49.17.]050 and [49.17.]060. 96-22-048, § 296-306A-40015, filed 10/31/96, effective 12/1/96.]

WAC 296-307-40017 Where may anhydrous ammonia containers be located? (1) When selecting the location for a storage container, you must take into account the physiological effects of ammonia and adjacent fire hazards. Containers located indoors must be in areas especially approved for container storage.

(2) Containers must be located at least fifty feet from a dug well or other sources of potable water supply, unless the container is a part of a water treatment installation.

(3) Permanent storage containers must be located outside densely populated areas.

(4) Containers must be located according to the following:

Nominal capacity of container	Minimum distances (feet) from container to: Line of adjoining property that may be built upon, highways & main line of railroad	Place of public assembly	Institution occupancy
Over 500 to 2,000	25	150	250
Over 2,000 to 30,000	50	300	500
Over 30,000 to 100,000	50	450	750
Over 100,000	50	600	1,000

(5) Storage areas must be kept free of readily ignitable materials such as waste, weeds and long dry grass.

[97-09-013, recodified as § 296-307-40017, filed 4/7/97, effective 4/7/97. Statutory Authority: RCW 49.17.040, [49.17.]050 and [49.17.]060. 96-22-048, § 296-306A-40017, filed 10/31/96, effective 12/1/96.]

WAC 296-307-40019 What requirements apply to container accessories? (1) All accessories must be designed for at least the maximum working pressure of the part of the system on which they are installed. All accessories must be fabricated from materials suitable for anhydrous ammonia service.

(2) All connections to containers must have shut-off valves located as close to the container as practical.

Exception: Safety-relief devices, gauging devices, or those fitted with a No. 54 drill size orifice are exempt from this requirement.

(3) All required excess flow valves must close automatically at the rated flows of vapor or liquid specified by the manufacturer. The connections, lines, valves, and fittings must have a greater capacity than the rated flow of the excess flow valve.

(4) Liquid-level gauging devices that require bleeding to the atmosphere and that are constructed so that outward flow is a maximum of that passed by a No. 54 drill size opening may be installed without excess flow valves.

(5) Openings from the container or through fittings attached directly on container to which pressure gauge connections are made may be installed without excess flow valves if the openings are a maximum of No. 54 drill size.

(6) Required excess flow and back pressure check valves must be located inside the container or outside as close as practical to where the line enters the container. When located outside, the installation must be made to prevent any stress beyond the excess flow or back pressure check valve from causing a break between the container and the valve.

(7) Excess flow valves must be designed with a bypass that is a maximum of No. 60 drill size opening to allow equalization of pressures.

(8) Shut-off valves provided with an excess flow valve must be designed for proper installation in a container connection so that the excess flow valve will close if the shut-off valve breaks.

(9) All excess flow valves must be plainly and permanently marked with the name or trademark of the manufacturer, the catalog number, and the rated capacity.

[97-09-013, recodified as § 296-307-40019, filed 4/7/97, effective 4/7/97. Statutory Authority: RCW 49.17.040, [49.17.]050 and [49.17.]060. 96-22-048, § 296-306A-40019, filed 10/31/96, effective 12/1/96.]

WAC 296-307-40021 What requirements apply to piping, tubing, and fittings? (1) All piping, tubing and fittings must be made of material suitable for anhydrous ammonia service.

(2) All piping, tubing and fittings must be designed for a pressure of at least the maximum pressure to which they may be subjected in service.

(3) All piping must be well supported and allow for expansion and contraction. All refrigeration system piping must conform to the Refrigeration Piping Code (ANSI B31.5 1966 addenda B31.1a-1968), a section of the American Standard Code for Pressure Piping, as it applies to ammonia.

(4) Piping used on nonrefrigerated systems must meet the requirements of ASTM A-53-1969 Grade B Electric Resistance Welded and Electric Flash Welded Pipe. Pipe must be at least Schedule 40 when joints are welded, or welded and flanged. Pipe must be at least Schedule 80 when joints are threaded. Brass, copper, or galvanized steel pipe or tubing is prohibited.

(5) All metal flexible connections for permanent installations must have a minimum working pressure of 250 psig (safety factor of 4). For temporary installations, you may use hose that meets the requirements of WAC 296-307-40023.

(6) Cast iron fittings are prohibited. You must use fittings made especially for ammonia service of malleable or nodular iron that meet the requirements of Specification ASTM A47 or ASTM A395.

(7) All piping, tubing, and fittings must allow for expansion, contraction, jarring, vibration, and settling.

(8) You must make adequate provision to protect all exposed piping from physical damage from moving machinery, the presence of automobiles or trucks, or other strain on the piping.

(9) Joint compounds must be resistant to ammonia.

(10) After assembly, all piping and tubing must be tested and proved to be free from leaks at pressure that is at least equal to the normal operating pressure of the system.

[Statutory Authority: RCW 49.17.040. 98-24-096, § 296-307-40021, filed 12/1/98, effective 3/1/99. 97-09-013, recodified as § 296-307-40021, filed 4/7/97, effective 4/7/97. Statutory Authority: RCW 49.17.040, [49.17.]050 and [49.17.]060. 96-22-048, § 296-306A-40021, filed 10/31/96, effective 12/1/96.]

WAC 296-307-40023 What specifications must hoses meet? (1) Hose used in ammonia service and subject to container pressure must meet the requirements of the joint Rubber Manufacturers Association and the Fertilizer Institute "Hose Specifications for Anhydrous Ammonia."

(2) Hose subject to container pressure must be designed for a minimum working pressure of 350 psig and a minimum burst pressure of 1750 psig. Hose assemblies must be able to withstand a test pressure of 500 psig.

(3) Hose and hose connections on the low pressure side of flow control or pressure reducing valves on devices discharging to atmospheric pressure must be designed for the maximum low side working pressure. All connections must be designed, constructed, and installed to prevent leaks when connected.

(4) Where liquid transfer hose is not drained after transfer operations, the hose must have an approved shut-off valve at the discharge end. You must provide a method to prevent excessive hydrostatic pressure in the hose. (See WAC 296-307-40025.)

(5) On all hose 1/2-inch outside diameter and larger, used for the transfer of anhydrous ammonia liquid or vapor, you must ensure that the following information is etched, cast, or impressed at five-foot intervals:

- Anhydrous Ammonia
- xxx psig (Maximum working pressure)
- Manufacturer's Name or Trademark
- Year of Manufacture

[Statutory Authority: RCW 49.17.040. 98-24-096, § 296-307-40023, filed 12/1/98, effective 3/1/99. 97-09-013, recodified as § 296-307-40023, filed 4/7/97, effective 4/7/97. Statutory Authority: RCW 49.17.040, [49.17.]050 and [49.17.]060. 96-22-048, § 296-306A-40023, filed 10/31/96, effective 12/1/96.]

WAC 296-307-40025 What requirements apply to safety-relief devices? (1) Every container used in systems covered by WAC 296-307-400 must have one or more spring-loaded safety-relief valves or the equivalent.

(2) The discharge from safety-relief valves must be vented away from the container, upward, and unobstructed to the atmosphere. All safety-relief valve discharge openings must have suitable raincaps that allow free discharge of the vapor and prevent water from entering. You must provide a method to drain condensate. The rate of discharge must be as follows:

Surface Area sq. ft.	Flow Rate CFM Air	Surface Area sq. ft.	Flow Rate CFM Air	Surface Area sq. ft.	Flow Rate CFM Air
20	258	185	1,600	900	5,850
25	310	190	1,640	950	6,120
30	360	195	1,670	1,000	6,380
35	408	200	1,710	1,050	6,640
40	455	210	1,780	1,100	6,900
45	501	220	1,850	1,150	7,160
50	547	230	1,920	1,200	7,410
55	591	240	1,980	1,250	7,660
60	635	250	2,050	1,300	7,910
65	678	260	2,120	1,350	8,160
70	720	270	2,180	1,400	8,410
75	762	280	2,250	1,450	8,650
80	804	290	2,320	1,500	8,900
85	845	300	2,380	1,550	9,140
90	885	310	2,450	1,600	9,380
95	925	320	2,510	1,650	9,620
100	965	330	2,570	1,700	9,860
105	1,010	340	2,640	1,750	10,090
110	1,050	350	2,700	1,800	10,330
115	1,090	360	2,760	1,850	10,560
120	1,120	370	2,830	1,900	10,800
125	1,160	380	2,890	1,950	11,030
130	1,200	390	2,950	2,000	11,260
135	1,240	400	3,010	2,050	11,490
140	1,280	450	3,320	2,100	11,720
145	1,310	500	3,620	2,150	11,950
150	1,350	550	3,910	2,200	12,180
155	1,390	600	4,200	2,250	12,400
160	1,420	650	4,480	2,300	12,630
165	1,460	700	4,760	2,350	12,850
170	1,500	750	5,040	2,400	13,080
175	1,530	800	5,300	2,450	13,300
180	1,570	850	5,590	2,500	13,520

Surface area = total outside surface area of container in square feet. When the surface area is not stamped on the name plate or when the marking is not legible, calculate the area with one of the following formulas:

• Hemispherical heads: Area = (Length in feet) X (outside diameter in feet) X 3.1416.

• Other than hemispherical heads: Area = (Length in feet) + (0.3 outside diameter in feet) X (outside diameter in feet) X 3.1416.

• Spherical container: Area = (outside diameter in feet)^2 X 3.1416.

• Flow rate: CFM air = cubic feet per minute of air required at standard conditions, 60F and atmospheric pressure (14.7 psia).

For containers with total outside surface area greater than 2,500 sq. ft., the formula is: Flow rate CFM air = 22.11 A0.82 where A = outside surface area of the container in square feet.

(3) Container safety-relief valves must be set for start to discharge as follows, according to the design pressure of the container.

Containers	Minimum	Maximum*
ASME U-68, U-69	110%	125%
ASME U-200, U-201	95%	100%
ASME 1952, 1956, 1959, 1962, 1965, 1968 or 1971	95%	100%
API-ASME	95%	100%
U.S. Coast Guard	As required by USCG regulations	
DOT	As required by DOT regulations	

*Note: Plus a relief valve manufacturer's tolerance of ten percent.

(4) Safety-relief devices used in systems covered by WAC 296-307-400 must be constructed to discharge at a rate equal to or greater than the rates required in subsection (2) of this section before the pressure exceeds 120% (not including the tolerance referred to in subsection (3) of this section) of the maximum permitted start-to-discharge pressure setting of the device.

(5) Safety-relief valves must be arranged to minimize tampering. If the pressure setting adjustment is external, the relief valves must have a sealable adjustment.

(6) Shut-off valves installed between the safety-relief valves and the containers or systems described in WAC 296-307-400 are prohibited.

Exception: A shut-off valve may be used where the arrangement of the valve allows the required capacity flow through the relief valves.

Exception example 1: A three-way valve installed under two safety-relief valves, each of which has the required rate of discharge and is installed to allow either of the safety-relief valves to be closed off, but does not allow both safety valves to be closed off at the same time.

Exception example 2: Two separate relief valves are installed with individual shut-off valves. The two shut-off valve stems must be mechanically interconnected to allow the full required flow of one safety-relief valve at all times.

Exception example 3: A safety-relief valve manifold that allows one valve of two, three, four or more to be closed off and the remaining valve or valves will provide not less than the rate of discharge shown on the manifold nameplate.

(7) Safety-relief valves must have direct communication with the vapor space of the container.

(8) Each safety-relief valve used with systems described in WAC 296-307-400 must be plainly and permanently marked as follows:

(a) With the letters "AA" or the symbol NH3.

(b) The pressure in pounds per square inch gauge (psig) at which the valve is set to start to discharge.

(c) The rate of discharge of the valve in cubic feet per minute of air at 60°F and atmospheric pressure (14.7 psia).

(d) The manufacturers name and catalog number.

For example: A safety-relief valve marked AA-250-4200 (air) mean the valve is suitable for use on an anhydrous ammonia container; that it is set to start to discharge at 250 psig; and that its rate of discharge is 4,200 cubic feet per minute of air.

(9) No connection to the safety-relief valve may restrict the flow capacity on either the upstream or downstream side.

(10) The manufacturer or supplier of a safety-relief valve manifold must publish complete data showing the flow rating through the combined assembly of the manifold with safety-relief valves installed. The manifold flow rating must be determined by testing the manifold with all but one valve discharging. The flow rate must be determined by the restricted opening or openings or those having the lowest flow. The valve must be marked as required in subsection (7) of this section.

(11) A hydrostatic relief valve must be installed between each pair of valves in the liquid ammonia piping or hose where liquid may be trapped to release into the atmosphere at a safe location.

(12) Discharge from safety-relief devices must not terminate in or beneath any building.

[Statutory Authority: RCW 49.17.040. 98-24-096, § 296-307-40025, filed 12/1/98, effective 3/1/99. 97-09-013, recodified as § 296-307-40025; filed 4/7/97, effective 4/7/97. Statutory Authority: RCW 49.17.040, [49.17.]050 and [49.17.]060. 96-22-048, § 296-306A-40025, filed 10/31/96, effective 12/1/96.]

WAC 296-307-40027 What emergency precautions are required when handling anhydrous ammonia? (1) You must train employees required to handle ammonia in the safe operating practices and the proper action to take in an emergency. Employees must be instructed to use the equipment listed in subsection (3) of this section in an emergency.

(2) If ammonia system leaks, the employees trained for and designated to act in emergencies must:

(a) See that anyone not required to deal with an emergency is evacuated from the contaminated area.

(b) Have two suitable gas masks in readily accessible locations. Full face masks with ammonia canisters as certified by NIOSH under 42 CFR Part 84, are suitable for emergency action for most leaks, particularly those that occur outdoors. For protection in concentrated ammonia atmospheres, self-contained breathing apparatus is required.

(c) Wear gauntlet type plastic or rubber gloves and wear plastic or rubber suits in heavily contaminated atmospheres.

(d) Shut off the appropriate valves.

(3) All storage systems must have on hand at least the following equipment for emergency and rescue purposes:

(a) *One full face gas mask with anhydrous ammonia refill canisters.

(b) **One pair of protective gloves.

(c) **One pair of protective boots.

(d) **One protective slicker and/or protective pants and jacket.

(e) Easily accessible shower and/or at least 50 gallons of clean water in an open top container.

(f) Tight-fitting vented goggles or one full face shield.

*If ammonia vapors are detected when the mask is applied, leave the area immediately. The life of a canister in service is controlled by the percentage of vapors to which it is exposed. Canisters must not be opened until ready for use and should be discarded after use or as recommended by the canister manufacturer. Unopened canisters may be guaranteed for as long as three years and all should be dated when received. In addition, an independently supplied air mask of the type used by fire departments may be used for emergencies.

**Gloves, boots, slickers, jackets, and pants must be made of rubber or other material impervious to ammonia.

(4) Where several persons are usually present, additional safety equipment may be necessary.

(5) Each tank motor vehicle transporting anhydrous ammonia, except farm applicator vehicles, must carry a container of at least five gallons of water and must have a full face gas mask, a pair of tight-fitting goggles or one full face shield. The driver must be instructed in their use and the proper action to take to provide for the driver's safety.

(6) If a leak occurs in transportation equipment and it is impractical to stop the leak, the driver should move the vehicle to an isolated location.

(7) If liquid ammonia contacts the skin or eyes, the affected area should be promptly and thoroughly flushed with water. Do not use neutralizing solutions or ointments on affected areas. A physician must treat all cases of eye exposure to liquid ammonia.

[Statutory Authority: RCW 49.17.010, 49.17.040, 49.17.050, and 49.17.060. 03-10-068, § 296-307-40027, filed 5/6/03, effective 8/1/03; 97-09-013, recodified as § 296-307-40027, filed 4/7/97, effective 4/7/97. Statutory Authority: RCW 49.17.040, [49.17.]050 and [49.17.]060. 96-22-048, § 296-306A-40027, filed 10/31/96, effective 12/1/96.]

WAC 296-307-40029 What requirements apply to filling densities? Filling density means the percent ratio of the weight of the gas in a container to the weight of water at 60°F that the container will hold. One pound of water equals 27.737 cubic inches at 60°F. To determine the weight capacity of the tank in pounds, the weight of a gallon (231 cubic inches) of water at 60°F in air must be 8.32828 pounds.

(1) The filling densities for nonrefrigerated containers must not exceed the following:

	Aboveground	Underground
(i) Uninsulated	56%	58%
(ii) Insulated	57%	

(iii) DOT containers shall be filled according to DOT regulations.

This corresponds to 82% by volume at -28°F, 85% by volume at 5°F, 87.5% by volume at 30°F, and 90.6% by volume at 60°F.

(2) When containers are filled according to liquid level by any gauging method other than a fixed length dip tube gauge, each container should have a thermometer well so that the internal liquid temperature can be easily determined and the amount of liquid and vapor in the container corrected to a 60°F basis.

[97-09-013, recodified as § 296-307-40029, filed 4/7/97, effective 4/7/97. Statutory Authority: RCW 49.17.040, [49.17.]050 and [49.17.]060. 96-22-048, § 296-306A-40029, filed 10/31/96, effective 12/1/96.]

WAC 296-307-40031 What requirements apply to the transfer of liquids? (1) Anhydrous ammonia must always be at a temperature suitable for the material of construction and design of the receiving containers. Ordinary steels are not suitable for refrigerated ammonia. See Appendix R of API Standard 620 "Recommended Rules for Design and Construction of Large Welded Low-Pressure Storage Tanks" for materials for low temperature service.

(2) At least one attendant must supervise the transfer of liquids from the time the connections are first made until they are finally disconnected.

(3) Flammable gases or gases that will react with ammonia (such as air) must not be used to unload tank cars or transport trucks.

(4) Containers must be charged or used only on authorization of the owner.

(5) Containers must be gauged and charged only in the open atmosphere or in buildings approved for that purpose.

(6) Pumps used for transferring ammonia must be recommended and labeled for ammonia service by the manufacturer.

(a) Pumps must be designed for at least 250 psig working pressure.

(b) Positive displacement pumps must have installed, off the discharge port, a constant differential relief valve discharging into the suction port of the pump through a line large enough to carry the full capacity of the pump at relief valve setting. The setting and installation must be according to the pump manufacturer's recommendations.

(c) On the discharge side of the pump, before the relief valve line, there must be a pressure gauge graduated from 0 to 400 psig installed.

(d) Plant piping must contain shut-off valves located as close as practical to pump connections.

(7) Compressors used for transferring or refrigerating ammonia must be recommended and labeled for ammonia service by the manufacturer.

(a) Compressors, except those used for refrigeration, must be designed for at least 250 psig working pressure. Crank cases of compressors not designed to withstand system pressure must be protected with a suitable safety-relief valve.

(b) Plant piping must have shut-off valves located as close as practical to compressor connections.

(c) A safety-relief valve large enough to discharge the full capacity of the compressor must be connected to the discharge before any shut-off valve.

(d) Compressors must have pressure gauges at suction and discharge graduated to at least one and one-half times the maximum pressure that can develop.

(e) Adequate means, such as drainable liquid trap, must be provided on the compressor suction to minimize the entry of liquid into the compressor.

(f) Where necessary to prevent contamination, an oil separator must be provided on the discharge side of the compressor.

(8) Loading and unloading systems must be protected by suitable devices to prevent emptying of the storage container or the container being loaded or unloaded if the hose is cut. Backflow check valves or properly sized excess flow valves must be installed where necessary to provide this protection. In the event that valves are not practical, remotely operated shut-off valves may be installed.

(9) Meters used to measure liquid anhydrous ammonia must be recommended and labeled for ammonia service by the manufacturer.

(a) Liquid meters must be designed for a minimum working pressure of 250 psig.

(b) The metering system must incorporate devices that will prevent the inadvertent measurement of vapor.

[97-09-013, recodified as § 296-307-40031, filed 4/7/97, effective 4/7/97. Statutory Authority: RCW 49.17.040, [49.17.]050 and [49.17.]060. 96-22-048, § 296-306A-40031, filed 10/31/96, effective 12/1/96.]

WAC 296-307-40033 What requirements apply to tank car unloading points and operations? (1) Provisions for unloading tank cars must meet DOT requirements.

(2) Unloading operations must be performed by reliable employees who are properly instructed and responsible for careful compliance with all procedures.

(3) Caution signs must be placed on the track or car to give necessary warning to anyone approaching car from the open end of the siding. The signs must be left up until after car is unloaded and disconnected from discharge connections. Signs must be of metal or other suitable material, at least 12 by 15 inches, and bear the words "STOP—Tank car connected" or "STOP—Men at work." The word "STOP" must be in letters at least four inches high and the other words in letters at least two inches high. The letters must be white on a blue background.

(4) The track of a tank car siding must be substantially level.

(5) Brakes must be set and wheels blocked on all cars being unloaded.

(6) Tank cars of anhydrous ammonia must be unloaded only at approved locations meeting the requirements of WAC 296-307-40025(4) and 296-307-40031(8).

[Statutory Authority: RCW 49.17.040. 98-24-096, § 296-307-40033, filed 12/1/98, effective 3/1/99. 97-09-013, recodified as § 296-307-40033, filed 4/7/97, effective 4/7/97. Statutory Authority: RCW 49.17.040, [49.17.]050 and [49.17.]060. 96-22-048, § 296-306A-40033, filed 10/31/96, effective 12/1/96.]

WAC 296-307-40035 What requirements apply to the liquid-level gauging device? (1) Each container except those filled by weight must have an approved liquid-level gauging device.

(2) All gauging devices must be arranged so that the maximum liquid level to which the container is filled is easily determined.

(3) Gauging devices that require bleeding of the product to the atmosphere such as the rotary tube, fixed tube, and slip tube devices, must be designed so that the maximum opening of the bleed valve is a maximum of No. 54 drill size unless provided with an excess flow valve.

(4) Gauging devices must have a design pressure equal to or greater than the design pressure of the container on which they are installed.

(5) Fixed liquid-level gauges must be designed so that the maximum volume of the container filled by liquid is a maximum of 85% of its water capacity. The coupling into which the fixed liquid-level gauge is threaded must be placed at the 85% level of the container. If located elsewhere, the dip tube of this gauge must be installed so that it cannot be readily removed.

Note: This does not apply to refrigerated storage.

(6) Columnar gauge glasses must be restricted to stationary storage installation. They must have shut-off valves having metallic hand wheels, excess flow valves, and extra heavy glass adequately protected by a metal housing applied by the gauge manufacturer. They must be shielded against the direct rays of the sun.

[97-09-013, recodified as § 296-307-40035, filed 4/7/97, effective 4/7/97. Statutory Authority: RCW 49.17.040, [49.17.]050 and [49.17.]060. 96-22-048, § 296-306A-40035, filed 10/31/96, effective 12/1/96.]

WAC 296-307-40037 How should aboveground uninsulated containers be maintained? Aboveground uninsulated containers should have a reflective surface maintained in good condition. We recommend white for painted surfaces, but other light reflecting colors are acceptable.

[97-09-013, recodified as § 296-307-40037, filed 4/7/97, effective 4/7/97. Statutory Authority: RCW 49.17.040, [49.17.]050 and [49.17.]060. 96-22-048, § 296-306A-40037, filed 10/31/96, effective 12/1/96.]

WAC 296-307-40039 What requirements apply to electrical equipment and wiring? (1) Electrical equipment and wiring for use in ammonia installations must be general purpose or weather resistant as appropriate.

(2) Where concentrations of ammonia in the air in excess of 16% by volume are likely to be encountered, electrical equipment and wiring must be specified by and installed according to chapter 296-307 WAC Part T, for Class I, Group D locations.

[Statutory Authority: RCW 49.17.040. 98-24-096, § 296-307-40039, filed 12/1/98, effective 3/1/99. 97-09-013, recodified as § 296-307-40039, filed 4/7/97, effective 4/7/97. Statutory Authority: RCW 49.17.040, [49.17.]050 and [49.17.]060. 96-22-048, § 296-306A-40039, filed 10/31/96, effective 12/1/96.]

Part U-2
Hazardous Materials—Liquified Petroleum Gas

WAC 296-307-410 Storage and handling of liquefied petroleum gases.

[97-09-013, recodified as § 296-307-410, filed 4/7/97, effective 4/7/97. Statutory Authority: RCW 49.17.040, [49.17.]050 and [49.17.]060. 96-22-048, § 296-306A-410, filed 10/31/96, effective 12/1/96.]

WAC 296-307-41001 What does this part cover? Chapter 296-307 WAC Part U2 covers the storage and handling of liquefied petroleum gases.

The requirements of WAC 296-307-410 apply to all LP-gas installations covered by this part.

For additional requirements related to:	See WAC:
Cylinder systems	296-307-415
Systems using non-DOT containers	296-307-420
LP-gas as a motor fuel	296-307-425
Storage of containers awaiting use or resale	296-307-430
LP-gas installations on commercial vehicles	296-307-435
LP-gas service stations	296-307-440

[Statutory Authority: RCW 49.17.040. 98-24-096, § 296-307-41001, filed 12/1/98, effective 3/1/99. 97-09-013, recodified as § 296-307-41001, filed 4/7/97, effective 4/7/97. Statutory Authority: RCW 49.17.040, [49.17.]050 and [49.17.]060. 96-22-048, § 296-306A-41001, filed 10/31/96, effective 12/1/96.]

WAC 296-307-41003 Which LP-gas installations are not covered by this part? (1) This part does not apply to:

(a) LP-gas refrigerated storage systems;

(b) LP-gas used with oxygen;

(c) LP-gas used in utility gas plants (covered by the National Fire Protection Association Standard for the Storage and Handling of Liquefied Petroleum Gases at Utility Gas Plants, NFPA No. 59-1968);

(d) Low-pressure (less than 1/2 pound per square inch or 14 inches water column) LP-gas piping systems, and the installation and operation of residential and commercial appliances supplied through such systems. The National Fire Protection Association Standard for the Installation of Gas Appliances and Gas Piping, NFPA 54-1969 apply to these systems.

(2) LP-gas installations, equipment, and appliances that met the requirements of the National Fire Protection Association Standard for the Storage and Handling of Liquefied Petroleum Gases NFPA No. 58-1972, 1973 at the time of manufacture or installation may be used if they do not create a hazard to employees.

[97-09-013, recodified as § 296-307-41003, filed 4/7/97, effective 4/7/97. Statutory Authority: RCW 49.17.040, [49.17.]050 and [49.17.]060. 96-22-048, § 296-306A-41003, filed 10/31/96, effective 12/1/96.]

WAC 296-307-41005 What definitions apply to this part? "Adequate ventilation," for fire prevention during normal operation, means the concentration of the gas in a gas-air mixture does not exceed 25% of the lower flammable limit.

"Containers" means all vessels, such as tanks, cylinders, or drums, used to transport or store LP-gases.

"DOT" means the federal Department of Transportation.

"DOT container" means a container that meets DOT regulations.

"DOT cylinder" means a cylinder that meets DOT regulations.

"DOT regulations/requirements/specifications" means the DOT regulations of 49 CFR part 178.

"Liquefied petroleum gases" and "LP-gas" means any material that is composed mostly of any of the following: Hydrocarbons, or mixtures of them; propane; propylene; butanes (normal butane or iso-butane); and butylenes.

"PSIA" pounds per square inch absolute.

"PSIG" means pounds per square inch gauge.

"Systems" means an assembly of the container or containers, major devices such as vaporizers, safety-relief valves, excess flow valves, regulators, and piping connecting such parts.

"Vaporizer-burner" means an integral vaporizer-burner unit, dependent upon the heat generated by the burner to vaporize the liquid used for dehydrators or dryers.

[97-09-013, recodified as § 296-307-41005, filed 4/7/97, effective 4/7/97. Statutory Authority: RCW 49.17.040, [49.17.]050 and [49.17.]060. 96-22-048, § 296-306A-41005, filed 10/31/96, effective 12/1/96.]

WAC 296-307-41007 When must LP-gas be odorized? You must ensure that all LP-gas is odorized by an approved agent to indicate by distinct odor, the presence of gas down to concentration in air of a maximum of 1/5 the lower limit of flammability.

Exception: Odorization is not required if it will create a hazard in further processing, or if it serves no useful purpose as a warning agent.

Note: The odorization requirement may be met by using 1.0 pounds of ethyl mercaptan, 1.0 pounds of thiophene, or 1.4 pounds of amyl mercaptan per ten thousand gallons of LP-gas. You may use any odorant and quantity that meets the requirements of this section.

[97-09-013, recodified as § 296-307-41007, filed 4/7/97, effective 4/7/97. Statutory Authority: RCW 49.17.040, [49.17.]050 and [49.17.]060. 96-22-048, § 296-306A-41007, filed 10/31/96, effective 12/1/96.]

WAC 296-307-41009 Must LP-gas containers and equipment be approved? (1) Each system of DOT containers must have approved container valves, connectors, manifold valve assemblies, and regulators.

(2) Each non-DOT system using containers of 2,000 gallons or less water capacity, must have a container assembly, one or more regulators, and other necessary parts. The entire system, or the container assembly with the regulators, must be individually listed by a nationally recognized testing laboratory.

"Container assembly" means the container and fittings for all openings, including shut-off vales, excess flow valves, liquid-level gauging devices, safety-relief devices, and protective housing.

(3) In systems using containers of over 2,000 gallons water capacity, each regulator, container, valve, excess flow valve, gauging device, and relief valve, must be listed by a nationally recognized testing laboratory.

(4) All DOT containers must be constructed, tested, and stamped according to the DOT specifications effective at the date of their manufacture.

[97-09-013, recodified as § 296-307-41009, filed 4/7/97, effective 4/7/97. Statutory Authority: RCW 49.17.040, [49.17.]050 and [49.17.]060. 96-22-048, § 296-306A-41009, filed 10/31/96, effective 12/1/96.]

WAC 296-307-41011 What construction and test requirements must containers meet? (1) Containers must be designed, constructed, and tested according to the *Rules for Construction of Unfired Pressure Vessels, section VIII, Division 1, American Society of Mechanical Engineers (ASME) Boiler and Pressure Vessel Code*, 1968 edition, unless otherwise specified.

(2) Containers constructed according to the 1949 and earlier editions of the ASME Code are exempt from U-2

through U-10 and U-19 of the code. Containers constructed according to U-70 in the 1949 and earlier editions do not meet the requirements of this section.

(3) Containers designed, constructed, and tested prior to July 1, 1961, according to the *Code for Unfired Pressure Vessels for Petroleum Liquids and Gases*, 1951 edition with 1954 Addenda, of the American Petroleum Institute and the American Society of Mechanical Engineers are considered in compliance. Containers constructed according to API-ASME Code do not have to comply with section I or with the appendix to section I. W-601 through W-606 in the 1943 and earlier editions do not apply.

[97-09-013, recodified as § 296-307-41011, filed 4/7/97, effective 4/7/97. Statutory Authority: RCW 49.17.040, [49.17.]050 and [49.17.]060. 96-22-048, § 296-306A-41011, filed 10/31/96, effective 12/1/96.]

WAC 296-307-41013 How must containers be welded? (1) You must ensure that all welding to the shell, head, or any other part of the container subject to internal pressure, meets the requirements of the code under which the tank was fabricated. You may weld on saddle plates, lugs, or brackets attached to the container by the tank manufacturer.

(2) When you must repair or modify DOT containers by welding, you must return the container to a qualified manufacturer, making containers of the same type, to make the repair or modification according to DOT regulations.

[97-09-013, recodified as § 296-307-41013, filed 4/7/97, effective 4/7/97. Statutory Authority: RCW 49.17.040, [49.17.]050 and [49.17.]060. 96-22-048, § 296-306A-41013, filed 10/31/96, effective 12/1/96.]

WAC 296-307-41015 How must containers be marked? (1) You must ensure that containers are marked according to DOT regulations or with the following:

(a) Indication that the container meets the requirements of the code under which it is constructed, and all marks required by that code.

(b) Indication whether the container is designed for underground or aboveground installation or both. If intended for both and different style hoods are provided, the marking must indicate the proper hood for each type of installation.

(c) The name and address of the supplier of the container, or with the trade name of the container.

(d) The water capacity of the container in pounds or gallons, United States standard.

(e) The pressure in psig, for which the container is designed.

(f) The wording "This container must not contain a product with a vapor pressure greater than _ psig at 100°F."

(g) The tare weight, for containers with a water capacity of three hundred pounds or less.

(h) Indication of the maximum fill level for liquid at temperatures between 20°F and 130°F. Markings must be in maximum increments of 20°F. This marking may be located on the liquid level gauging device.

Exception: Containers provided with fixed maximum level indicators or that are filled by weighing are exempt from this requirement.

(i) The outside surface area in square feet.

(2) The markings must be on a metal nameplate attached to the container so that it is visible after the container is installed.

(3) When LP-gas and one or more other gases are stored or used in the same area, the containers must be marked to identify their content. Marking must be according to American National Standard Z48.1-1954, "Method of Marking Portable Compressed Gas Containers to Identify the Material Contained."

[97-09-013, recodified as § 296-307-41015, filed 4/7/97, effective 4/7/97. Statutory Authority: RCW 49.17.040, [49.17.]050 and [49.17.]060. 96-22-048, § 296-306A-41015, filed 10/31/96, effective 12/1/96.]

WAC 296-307-41017 Where must containers be located? You must ensure that containers are located according to the following:

(1) Containers and first stage regulating equipment are located outdoors.

Containers may be located indoors under any of the following conditions:

(a) In buildings used exclusively for container charging, vaporization pressure reduction, gas mixing, gas manufacturing, or distribution;

(b) When portable use is necessary and meets the requirements of WAC 296-307-41509;

(c) LP-gas fueled stationary or portable engines that meet the requirements of WAC 296-307-42521 or 296-307-42523;

(d) LP-gas fueled industrial trucks that meet the requirements of WAC 296-307-42525;

(e) LP-gas fueled vehicles garaged according to WAC 296-307-42527; or

(f) Containers awaiting use or resale when stored according to WAC 296-307-430.

(2) Each individual container is located away from the nearest important building, group of buildings, or line of adjoining property that may be built on, according to Table U-1.

TABLE U-1
Minimum distances

Water capacity per container	Containers Under-ground	Containers Above-ground	Between above-ground containers
Less than 125 gals[a]	10 feet	None	None
125-250 gals	10 feet	10 feet	None
251-500 gals	10 feet	10 feet	3 feet
501-2,000 gals	25 feet[b]	25 feet[b]	3 feet
2,001-30,000 gals	50 feet	50 feet	5 feet
30,001-70,000 gals	50 feet	75 feet	1/4 of sum of diameters of adjacent containers
70,001-90,000 gals	50 feet	100 feet	1/4 of sum of diameters of adjacent containers

(a) If the total water capacity of a multicontainer installation at a consumer site is 501 gallons or more, the minimum distance must comply with this table, applying the aggregate

capacity instead of the capacity per container. For multiple installations, installations must be at least twenty-five feet apart. Do not apply the MINIMUM DISTANCES BETWEEN ABOVEGROUND CONTAINERS to such installations.

(b) Distance requirements may be reduced to 10 feet for a single container of 1200 gallons water capacity or less, if the container is at least 25 feet from any other LP-gas container of more than 125 gallons water capacity.

(c) In buildings devoted exclusively to gas manufacturing and distributing operations, the distances may be reduced if no containers of more than 500 gallons water capacity are located closer than ten feet to gas manufacturing and distributing buildings.

(3) Containers installed for use must not be stacked one above the other.

(4) In industrial installations involving containers of 180,000 gallons total water capacity or more, where serious exposures from the container to adjacent properties are common, firewalls or other means of protection designed and constructed according to good engineering practices are required.

(5) Readily ignitible material such as weeds and long dry grass is removed within ten feet of any container.

(6) The minimum separation between LP-gas containers and flammable liquid tanks is twenty feet; the minimum separation between a container and the centerline of the dike is ten feet.

EXCEPTION: This does not apply when LP-gas containers of 125 gallons or less capacity are installed adjacent to Class III flammable liquid tanks of 275 gallons or less capacity.

(7) The accumulation of flammable liquids under adjacent LP-gas containers is prevented by a means such as diking, diversion curbs, or grading.

(8) When dikes are used with flammable liquid tanks, no LP-gas containers are located within the diked area.

[Statutory Authority: RCW 49.17.040. 98-24-096, § 296-307-41017, filed 12/1/98, effective 3/1/99. 97-09-013, recodified as § 296-307-41017, filed 4/7/97, effective 4/7/97. Statutory Authority: RCW 49.17.040, [49.17.]050 and [49.17.]060. 96-22-048, § 296-306A-41017, filed 10/31/96, effective 12/1/96.]

WAC 296-307-41019 What requirements apply to valves and accessories? (1) Valves, fittings, and accessories connected directly to the container including primary shut-off valves, must have a rated working pressure of at least 250 psig and must be of material and design suitable for LP-gas service. The use of cast iron for container valves, fittings, and accessories is prohibited. Container valves may be made of malleable or nodular iron.

(2) Connections to containers must have shut-off valves located as close to the container as practical.

Exception: This does not apply to safety-relief connections, liquid level gauging devices, and plugged openings.

(3) All required excess flow valves must close automatically at the rated flows of vapor or liquid specified by the manufacturer. The connections, lines, valves, and fittings must have a greater capacity than the rated flow of the excess flow valve.

(4) Liquid level gauging devices that are constructed so that outward flow is a maximum of that passed by a No. 54 drill size opening may be installed without excess flow valves.

(5) Openings from container or through fittings attached directly on container to which pressure gauge connection is made, need not have shut-off or excess flow valves if such openings are restricted to not larger than No. 54 drill size opening.

(6) Required excess flow and back pressure check valves must be located inside the container or outside where the line enters the container. When located outside, the installation must be made to prevent any stress beyond the excess flow or back pressure check valve from causing a break between the container and the valve.

Exception: This does not apply to systems using containers with a water capacity greater than 2-1/2 pounds (nominal one pound LP-gas capacity).

(7) Excess flow valves must be designed with a bypass that is a maximum of No. 60 drill size opening to allow equalization of pressures.

(8) Containers of more than 30 gallons water capacity and less than 2,000 gallons water capacity, filled on a volumetric basis, and manufactured after December 1, 1963, must be equipped for filling into the vapor space.

[97-09-013, recodified as § 296-307-41019, filed 4/7/97, effective 4/7/97. Statutory Authority: RCW 49.17.040, [49.17.]050 and [49.17.]060. 96-22-048, § 296-306A-41019, filed 10/31/96, effective 12/1/96.]

WAC 296-307-41021 What requirements apply to piping, tubing, and fittings? (1) Pipe must be wrought iron or steel (black or galvanized), brass, copper, or aluminum alloy. Aluminum alloy pipe must be at least Schedule 40 according to the specifications for Aluminum Alloy Pipe, ANSI H38.7-1969 (ASTM, B241-1969), and must be suitably marked at each end of each length indicating compliance with ANSI specifications. Alloy 5456 is prohibited.

Exception: This does not apply to piping for LP-gas used as a motor fuel or to piping on commercial vehicles.

(2) Aluminum alloy pipe must be protected against external corrosion whenever:

(a) It is in contact with dissimilar metals other than galvanized steel; or

(b) Its location is subject to repeated wetting by such liquids as water (except rain water), detergents, sewage, or leaking from other piping; or

(c) It passes through flooring, plaster, masonry, or insulation.

Galvanized sheet steel or pipe, galvanized inside and out, are considered suitable protection.

(3) Aluminum pipe must be three-fourths inch nominal and shall not be used for pressures exceeding 20 psig. Aluminum alloy pipe must not be installed within six inches of the ground.

(a) Vapor piping with operating pressures not exceeding 125 psig must be suitable for a working pressure of at least 125 psig. Pipe must be at least Schedule 40 ASTM A-53-69, Grade B Electric Resistance Welded and Electric Flash Welded Pipe or equal.

(b) Vapor piping with operating pressures over 125 psig and all liquid piping must be suitable for a working pressure of at least 250 psig. Pipe must be at least Schedule 80 if joints

are threaded or threaded and back welded. At least Schedule 40 (ASTM A-53-1969 Grade B Electric Resistance Welded and Electric Flash Welded Pipe or equal) must be used if joints are welded, or welded and flanged.

(4) Tubing must be seamless copper, brass, steel, or aluminum alloy. Copper tubing must be of Type K or L or equivalent as covered in the Specification for Seamless Copper Water Tube, ANSI H23.1-1970 (ASTM B88-1969). Aluminum alloy tubing must be of Type A or B or equivalent as covered in Specification ASTM B210-1968 and must be suitably marked every 18 inches indicating compliance with ASTM specifications. The minimum nominal wall thickness of copper tubing and aluminum alloy tubing must be as specified in Table U-2 and Table U-3.

TABLE U-2
WALL THICKNESS OF COPPER TUBING[1]

Note: The standard tube size is one-eighth-inch smaller than its nominal outside diameter.

Standard size (inches)	Nominal O.D. (inches)	Nominal wall thickness (inches)	
		Type K	Type L
1/4	0.375	0.035	0.030
3/8	0.500	0.049	0.035
1/2	0.625	0.049	0.040
5/8	0.750	0.049	0.042
3/4	0.875	0.065	0.045
1	1.125	0.065	0.050
1 1/4	1.375	0.065	0.055
1 1/2	1.625	0.072	0.060
2	2.125	0.083	0.070

[1]Based on data in Specification for Seamless Copper Water Tubing, ANSI H23.1-1970 (ASTM B-88-69).

TABLE U-3
WALL THICKNESS OF ALUMINUM ALLOY TUBING[1]

Outside diameter (inches)	Nominal wall thickness (inches)	
	Type A	Type B
3/8	0.035	0.049
1/2	0.035	0.049
5/8	0.042	0.049
3/4	0.049	0.058

[1]Based on data in Standard Specification for Aluminum-Alloy Drawn Seamless Coiled Tubes for Special Purpose Applications, ASTM B210-68.

(5) Aluminum alloy tubing must be protected against external corrosion whenever:

(a) It is in contact with dissimilar metals other than galvanized steel; or

(b) Its location is subject to repeated wetting by liquids such as water (except rainwater), detergents, sewage, or leakage from other piping; or

(c) It passes through flooring, plaster, masonry, or insulation.

Galvanized sheet steel or pipe, galvanized inside and out, are considered suitable protection.

(6) The maximum outside diameter for aluminum alloy tubing must be three-fourths inch and must not be used for pressures exceeding 20 psig. Aluminum alloy tubing installed within six inches of the ground is prohibited.

(7) In systems where the gas in liquid form enters the building without pressure reduction, only heavy walled seamless brass or copper tubing with an internal diameter a maximum of 3/32 inch, and a wall thickness of at least 3/64 inch shall be used.

Exception: This requirement does not apply to research and experimental laboratories, buildings or separate fire divisions of buildings used exclusively for housing internal combustion engines, and to commercial gas plants or bulk stations where containers are charged, nor to industrial vaporizer buildings, nor to buildings, structures, or equipment under construction or undergoing major renovation.

(8) Pipe joints must be screwed, flanged, welded, soldered, or brazed with a material having a melting point over 1,000°F. Joints on seamless copper, brass, steel, or aluminum alloy gas tubing shall be made by approved gas tubing fittings, or soldered or brazed with a material having a melting point over 1,000°F.

(9) For operating pressures of 125 psig or less, fittings must be designed for a pressure of at least 125 psig. For operating pressures above 125 psig, fittings must be designed for a minimum of 250 psig.

(10) Threaded cast iron pipe fittings are prohibited. Aluminum alloy fittings must be used with aluminum alloy pipe and tubing. Insulated fittings must be used where aluminum alloy pipe or tubing connects with a dissimilar metal. You may use malleable, nodular, or higher strength gray iron for fittings.

Note: Strainers, regulators, meters, compressors, pumps, etc., are not to be considered as pipe fittings.

(11) All materials such as valve seats, packing, gaskets, diaphragms, etc., must be resistant to the action of LP-gas under the service conditions to which they are subjected.

(12) All piping, tubing, or hose must be tested after assembly and proved free from leaks at least normal operating pressures. After installation, piping and tubing of all domestic and commercial systems must be tested and proved free of leaks using a manometer or equivalent device that will indicate a drop in pressure. Test made by flame is prohibited.

(13) You must ensure that piping allows for expansion, contraction, jarring, and vibration, and settling. You may use flexible connections.

(14) Piping outside buildings may be buried, aboveground, or both, but must be well supported and protected against physical damage. Where soil conditions warrant, all piping must be protected against corrosion. Where condensation may occur, the piping must be pitched back to the container, or you must provide a means for revaporization of the condensate.

[97-09-013, recodified as § 296-307-41021, filed 4/7/97, effective 4/7/97. Statutory Authority: RCW 49.17.040, [49.17.]050 and [49.17.]060. 96-22-048, § 296-306A-41021, filed 10/31/96, effective 12/1/96.]

WAC 296-307-41023 What specifications must hoses meet? (1) Hose shall be fabricated of materials that are resistant to the action of LP-gas in the liquid and vapor phases. If wire braid is used for reinforcing the hose, it must be of corrosion-resistant material such as stainless steel.

(2) Hose subject to container pressure must be marked "LP-gas" or "LPG" at not greater than ten-foot intervals.

(3) Hose subject to container pressure must be designed for a bursting pressure of not less than 1,250 psig.

(4) Hose subject to container pressure must be listed by a nationally recognized testing laboratory.

(5) Hose connections subject to container pressure must be able to withstand, without leaking, a test pressure of not less than 500 psig.

(6) Hose and hose connections on the low-pressure side of the regulator or reducing valve must be designed for a bursting pressure of not less than 125 psig or five times the set pressure of the relief devices protecting that portion of the system, whichever is higher.

(7) Hose may be used on the low-pressure side of regulators to connect to other than domestic and commercial gas appliances under the following conditions:

(a) The appliances connected with hose are portable and need a flexible connection.

(b) For use inside buildings, the hose is of minimum practical length, but is a maximum of six feet. Hose must not extend from one room to another, nor pass through any walls, partitions, ceilings, or floors. Such hose must not be concealed from view or used in a concealed location.

Exception: For use outside of buildings, the hose may exceed this length but must be kept as short as practical.

(c) The hose must be approved and must not be used where it may be exposed to temperatures above 125°F. The hose must be securely connected to the appliance. Rubber slip ends are prohibited.

(d) The shut-off valve for an appliance connected by hose must be in the metal pipe or tubing and not at the appliance end of the hose. When shut-off valves are installed close to each other, precautions must be taken to prevent operation of the wrong valve.

(e) Hose used for connecting to wall outlets must be protected from physical damage.

[97-09-013, recodified as § 296-307-41023, filed 4/7/97, effective 4/7/97. Statutory Authority: RCW 49.17.040, [49.17.]050 and [49.17.]060. 96-22-048, § 296-306A-41023, filed 10/31/96, effective 12/1/96.]

WAC 296-307-41025 What requirements apply to safety devices? (1) Every container except those constructed according to DOT specifications and every vaporizer (except motor fuel vaporizers and vaporizers described in WAC 296-307-41029(3) and 296-307-42007 (6)(a) whether heated by artificial means or not, must have one or more safety-relief valves of spring-loaded or equivalent type. These valves must be arranged to afford free vent to the outer air with discharge not less than five feet horizontally away from any opening into the building that is below such discharge. The rate of discharge must be according to the requirements of subsection (2) or (4) of this section.

(2) Minimum required rate of discharge in cubic feet per minute of air at one hundred twenty percent of the maximum permitted start to discharge pressure for safety-relief valves to be used on containers other than those constructed according to DOT specification must be as follows:

Surface area sq. ft.	Flow rate CFM air	Surface area sq. ft.	Flow rate CFM air	Surface area sq. ft.	Flow rate CFM air
20 or less	626	170	3,620	550	9,470
25	751	175	3,700	600	10,170
30	872	180	3,790	650	10,860
35	990	185	3,880	700	11,550
40	1,100	190	3,960	750	12,220
45	1,220	195	4,050	850	13,540
50	1,330	200	4,130	900	14,190
55	1,430	210	4,300	950	14,830
60	1,540	220	4,470	1,000	15,470
65	1,640	230	4,630	1,050	16,100
70	1,750	240	4,800	1,100	16,720
75	1,850	250	4,960	1,150	17,350
80	1,950	260	5,130	1,200	17,960
85	2,050	270	5,290	1,250	18,570
90	2,150	280	5,450	1,300	19,180
95	2,240	290	5,610	1,350	19,780
100	2,340	300	5,760	1,400	20,380
105	2,440	310	5,920	1,450	20,980
110	2,530	320	6,080	1,500	21,570
115	2,630	330	6,230	1,550	22,160
120	2,720	340	6,390	1,600	22,740
125	2,810	350	6,540	1,650	23,320
130	2,900	360	6,690	1,700	23,900
135	2,990	370	6,840	1,750	24,470
140	3,080	380	7,000	1,800	25,050
145	3,170	390	7,150	1,850	25,620
150	3,260	400	7,300	1,900	26,180
155	3,350	450	8,040	1,950	26,750
160	3,440	500	8,760	2,000	27,310
165	3,530				

Surface area = total outside surface area of container in square feet.

(3) When the surface area is not stamped on the name plate or when the marking is not legible, calculate the area with one of the following formulas:

• Hemispherical heads: Area = (overall length) X (outside diameter) X 3.1416.

• Other than hemispherical heads: Area = (overall length) +0.3 (outside diameter) X (outside diameter) X 3.1416.

Note: This formula is not exact, but will give results within the limits of practical accuracy for the sole purpose of sizing relief valves.

• Spherical container: Area = (outside diameter)^2 X 3.1416.

• Flow rate: CFM air = required flow capacity in cubic feet per minute of air at standard conditions, 60°F and atmospheric pressure (14.7 psia).

For containers with total outside surface area greater than 2,000 sq. ft., the formula is: Flow rate CFM air = 53.632 A0.82 where A = outside surface area of the container in square feet.

Valves not marked "air" have flow rate marking in cubic feet per minute of LP-gas. These can be converted to ratings in cubic feet per minute of air by multiplying the LP-gas ratings by factors listed below. Air flow ratings can be con-

verted to ratings in cubic feet per minute of LP-gas by dividing the air ratings by the factors listed below.

AIR CONVERSION FACTORS

Container type	100	125	150	175	200
Air conversion factor	1.162	1.142	1.113	1.078	1.010

(4) The minimum required rate of discharge for safety-relief valves for LP-gas vaporizers (steam heated, water heated, and direct fired) must be determined as follows:

(a) Obtain the total surface area by adding the surface area of vaporizer shell in square feet directly in contact with LP-gas and the heat exchanged surface area in square feet directly in contact with LP-gas.

(b) Obtain the minimum required rate of discharge in cubic feet of air per minute, at 60°F and 14.7 psia from subsection (2) of this section, for this total surface area.

(5) Container and vaporizer safety-relief valves must be set to start to discharge, with relation to the design pressure of the container, according to the following:

Containers	Minimum (percent)	Maximum (percent)
ASME Code; Par. U-68, U-69—1949 and earlier editions	110	*125
ASME Code; Par. U-200, U-201—1949 edition	88	*100
ASME Code—1950, 1952, 1956, 1959, 1962, 1965 and 1968 (Division I) editions	88	*100
API—ASME Code—all editions	88	*100
DOT	As prescribed in 49 CFR Chapter I	

*Manufacturers of safety-relief valves are allowed a plus tolerance not exceeding 10% of the set pressure marked on the valve.

(6) Safety-relief devices used with systems employing non-DOT containers must be constructed to discharge at not less than the rates shown in subsection (2) of this section, before the pressure is in excess of 120% of the maximum (not including the 10% referred to in subsection (5) of this section) permitted start-to-discharge pressure setting of the device.

(7) In high temperature areas, you must use a lower vapor pressure product or a higher designed pressure vessel to prevent the safety valves from opening. The tanks may be protected by cooling devices such as spraying, shading, or other means.

(8) Safety-relief valves must be arranged to minimize tampering. For external pressure setting or adjustment, the relief valves must have an approved sealable adjustment.

(9) Shut-off valves are prohibited between safety-relief devices and the container, equipment, or piping.

EXCEPTION: A shut-off valve may be used where the arrangement of the valve allows the required capacity flow through the safety-relief device.

(10) Safety-relief valves must have direct communication with the vapor space of the container.

(11) Each safety-relief valve must be plainly and permanently marked with the following:

(a) Container type of the pressure vessel on which the valve is designed to be installed;

(b) The pressure in psig at which the valve is set to discharge;

(c) The actual rate of discharge of the valve in cubic feet per minute of air at 60°F and 14.7 psia; and

(d) The manufacturer's name and catalog number.

For example: T200-250-4050 AIR: Indicates that the valve is suitable for use on a Type 200 container, that it is set to start to discharge at 250 psig; and that its rate of discharge is 4,050 cubic feet per minute of air.

(12) Safety-relief valve assemblies and their connections must be large enough to provide the required rate of flow for the container on which they are installed.

(13) A hydrostatic relief valve must be installed between each pair of shut-off valves on LP-gas liquid piping. The start-to-discharge pressure setting of such relief valves must be a maximum of 500 psig. The minimum setting on relief valves installed in piping connected to non-DOT containers shall be 140% of the container relief valve setting. For piping connected to DOT containers, the minimum must be 400 psig. The relief valve should not be installed in the pump discharge piping if the same protection can be provided by installing the relief valve in the suction piping. The start-to-discharge pressure setting of such a relief valve, if installed on the discharge side of a pump, must exceed the maximum pressure permitted by the recirculation device in the system.

(14) The discharge from any safety-relief device must not terminate in or beneath any building.

EXCEPTION: This requirement does not apply to relief devices covered by WAC 296-307-41017(1), 296-307-41507(1), or 296-307-41509.

(15) Container safety-relief devices and regulator relief vents must be located at least five feet in any direction from air openings into sealed combustion system appliances or mechanical ventilation air intakes.

[Statutory Authority: RCW 49.17.040. 98-24-096, § 296-307-41025, filed 12/1/98, effective 3/1/99. 97-09-013, recodified as § 296-307-41025, filed 4/7/97, effective 4/7/97. Statutory Authority: RCW 49.17.040, [49.17.]050 and [49.17.]060. 96-22-048, § 296-306A-41025, filed 10/31/96, effective 12/1/96.]

WAC 296-307-41027 How must indirect fired vaporizers be constructed and installed? Indirect fired vaporizers utilizing steam, water, or other heating medium must be constructed and installed according to the following:

(1) Vaporizers must be constructed according to the requirements of WAC 296-307-41011 and must be permanently marked as follows:

(a) With the code marking signifying the specifications to which the vaporizer is constructed;

(b) With the allowable working pressure and temperature for which the vaporizer is designed;

(c) With the sum of the outside surface area and the inside heat exchange surface area expressed in square feet; and

(d) With the name or symbol of the manufacturer.

(2) Vaporizers with an inside diameter of six inches or less exempted by the ASME Unfired Pressure Vessel Code,

Section VIII of the ASME Boiler and Pressure Vessel Code, 1968, must have a design pressure of at least 250 psig and need not be permanently marked.

(3) Heating or cooling coils installed inside a storage container are prohibited.

(4) Vaporizers may be installed in buildings, rooms, sheds, or lean-tos used exclusively for gas manufacturing or distribution, or in other light, noncombustible structures that are well ventilated near the floor line and roof.

Exception: When vaporizing and/or mixing equipment is in a structure not used exclusively for gas manufacturing or distribution, the structure or room must be separated from the remainder of the building. The separation must be a wall designed to withstand a static pressure of at least 100 pounds per square foot. This wall must have no openings or pipe or conduit passing through it. Such structure or room must have adequate ventilation and must have a roof or at least one exterior wall of lightweight construction.

(5) All DOT vaporizers must have, at or near the discharge, a safety-relief valve providing an effective rate of discharge according to WAC 296-307-41025.

(6) The heating medium lines into and out of the vaporizer must have a mechanism to prevent the flow of gas into the heat systems in the event of tube rupture in the vaporizer. Vaporizers must have an automatic means to prevent liquid from passing through the vaporizers to the gas discharge piping.

(7) The device that supplies heat to produce steam, hot water, or other heat may be installed in a building, compartment, room, or lean-to ventilated near the floorline and roof to the outside. The device must be separated from all compartments or rooms containing LP-gas vaporizers, pumps, and central gas mixing devices by a wall designed to withstand a static pressure of at least 100 pounds per square foot. This wall must have no openings or pipes or conduit passing through it.

Exception: This requirement does not apply to the domestic water heaters that may supply heat for a vaporizer in a domestic system.

(8) Gas-fired heating systems supplying heat exclusively for vaporization must have automatic safety devices to shut off the flow of gas to main burners, if the pilot light should fail.

(9) Vaporizers may be an integral part of a fuel storage container directly connected to the liquid section or gas section or both.

(10) Fusible plugs are prohibited on vaporizers.

(11) Vaporizer houses must not have unprotected drains to sewers or sump pits.

[Statutory Authority: RCW 49.17.040. 98-24-096, § 296-307-41027, filed 12/1/98, effective 3/1/99. 97-09-013, recodified as § 296-307-41027, filed 4/7/97, effective 4/7/97. Statutory Authority: RCW 49.17.040, [49.17.]050 and [49.17.]060. 96-22-048, § 296-306A-41027, filed 10/31/96, effective 12/1/96.]

WAC 296-307-41029 How must atmospheric vaporizers be constructed and installed? Atmospheric vaporizers using heat from the ground or surrounding air must be installed as follows:

(1) Buried underground; or

(2) Located inside the building near where the pipe enters the building, if the capacity of the unit does not exceed one quart;

(3) Vaporizers of less than one quart capacity heated by the ground or surrounding air, may be installed without safety-relief valves if tests show that the assembly is safe.

[97-09-013, recodified as § 296-307-41029, filed 4/7/97, effective 4/7/97. Statutory Authority: RCW 49.17.040, [49.17.]050 and [49.17.]060. 96-22-048, § 296-306A-41029, filed 10/31/96, effective 12/1/96.]

WAC 296-307-41031 How must direct gas-fired vaporizers be constructed and installed? Direct gas-fired vaporizers must be constructed, marked, and installed as follows:

(1) According to the requirements of the *American Society of Mechanical Engineers Boiler and Pressure Vessel Code*, 1968, that apply to the maximum working conditions for which the vaporizer is designed.

(2) With the name of the manufacturer; rated Btu input to the burner; the area of the heat exchange surface in square feet; the outside surface of the vaporizer in square feet; and the maximum vaporizing capacity in gallons per hour.

(3) Vaporizers may be connected to the liquid section or the gas section of the storage container, or both. The container must have a manually operated valve in each connection that completely shuts off when desired, all flow of gas or liquid from container to vaporizer.

(4) Vaporizers with a maximum capacity of 35 gallons per hour must be located at least 5 feet from container shut-off valves. Vaporizers more than 35 gallon capacity but a maximum of 100 gallons per hour must be located at least 10 feet from the container shut-off valves. Vaporizers having a capacity greater than 100 gallons per hour must be located at least 15 feet from container shut-off valves.

(5) Vaporizers may be installed in buildings, rooms, housings, sheds, or lean-tos used exclusively for vaporizing or mixing of LP-gas. Vaporizing housing structures must be noncombustible, and well ventilated near the floorline and the highest point of the roof. When vaporizer and/or mixing equipment is located in a structure or room attached to or within a building, such structure or room must be separated from the remainder of the building by a wall designed to withstand a static pressure of at least 100 pounds per square foot. This wall must have no openings or pipes or conduit passing through it. The structure or room must have adequate ventilation, and a roof or at least one exterior wall of lightweight construction.

(6) Vaporizers must have at or near the discharge, a safety-relief valve providing an effective rate of discharge according to WAC 296-307-41025. The relief valve must be located where it is not subjected to temperatures over 140°F.

(7) Vaporizers must have suitable automatic means to prevent liquid passing from the vaporizer to the gas discharge piping of the vaporizer.

(8) Vaporizers must have means for manually turning off the gas to the main burner and pilot.

(9) Vaporizers must have automatic safety devices to shut off the flow of gas to main burners if the pilot light should fail. When the flow through the pilot exceeds 2,000 Btu per hour, the pilot also must have an automatic safety device to shut off the flow of gas to the pilot should the pilot flame be extinguished.

(10) Pressure regulating and pressure reducing equipment located within 10 feet of a direct fired vaporizer must be

separated from the open flame by an airtight noncombustible partition.

(11) Except as provided in subsection (5) of this section, the following minimum distances must be maintained between direct fired vaporizers and the nearest important building, group of buildings, or line of adjoining property that may be built on:

(a) Ten feet for vaporizers with a vaporizing capacity of 15 gallons per hour or less;

(b) Twenty-five feet for vaporizers with a vaporizing capacity of 16-100 gallons per hour;

(c) Fifty feet for vaporizers with a vaporizing capacity over 100 gallons per hour.

(12) Direct fired vaporizers must not raise the product pressure above the design pressure of the vaporizer equipment or above the pressure shown in the second column of Table U-8.

(13) Fusible plugs are prohibited on vaporizers.

(14) Vaporizers must not have unprotected drains to sewers or sump pits.

[Statutory Authority: RCW 49.17.040. 98-24-096, § 296-307-41031, filed 12/1/98, effective 3/1/99. 97-09-013, recodified as § 296-307-41031, filed 4/7/97, effective 4/7/97. Statutory Authority: RCW 49.17.040, [49.17.]050 and [49.17.]060. 96-22-048, § 296-306A-41031, filed 10/31/96, effective 12/1/96.]

WAC 296-307-41033 How must direct gas-fired tank heaters be constructed and installed? Direct gas-fired tank heaters must be constructed and installed as follows:

(1) Direct gas-fired tank heaters, and tanks to which they are applied, must only be installed aboveground.

(2) Tank heaters must be permanently marked with the name of the manufacturer, the rated Btu input to the burner, and the maximum vaporizing capacity in gallons per hour.

Note: Tank heaters may be an integral part of a fuel storage container directly connected to the container liquid section, or vapor section, or both.

(3) Tank heaters must have a means for manually turning off the gas to the main burner and pilot.

(4) Tank heaters must have an automatic safety device to shut off the flow of gas to main burners, if the pilot light should fail. When flow through pilot exceeds 2,000 Btu per hour, the pilot also must have an automatic safety device to shut off the flow of gas to the pilot should the pilot flame be extinguished.

(5) Pressure regulating and pressure reducing equipment if located within ten feet of a direct fired tank heater must be separated from the open flame by a substantially airtight noncombustible partition.

(6) The following minimum distances must be maintained between a storage tank heated by a direct fired tank heater and the nearest important building, group of buildings, or line of adjoining property that may be built on:

(a) Ten feet for storage containers of less than 500 gallons water capacity;

(b) Twenty-five feet for storage containers of 500-1,200 gallons water capacity;

(c) Fifty feet for storage containers of over 1,200 gallons water capacity.

(7) No direct fired tank heater may raise the product pressure within the storage container over 75% of the pressure in the second column of Table U-8.

[97-09-013, recodified as § 296-307-41033, filed 4/7/97, effective 4/7/97. Statutory Authority: RCW 49.17.040, [49.17.]050 and [49.17.]060. 96-22-048, § 296-306A-41033, filed 10/31/96, effective 12/1/96.]

WAC 296-307-41035 How must dehydrators be constructed and installed? The vaporizer section of vaporizer-burners used for dehydrators or dryers must be located outdoors; they must be constructed and installed as follows:

(1) Vaporizer-burners must have a minimum design pressure of 250 psig with a factor safety of five.

(2) Manually operated positive shut-off valves must be located at the containers to shut off all flow to the vaporizer-burners.

(3) Minimum distances between storage containers and vaporizer-burners must be as follows:

Water capacity per container (gallons)	Minimum distances (feet)
Less than 501	10
501 to 2,000	25
Over 2,000	50

(4) The vaporizer section of vaporizer-burners must be protected by a hydrostatic relief valve. The relief valve must be located where it is not subjected to temperatures over 140°F. The start-to-discharge pressure setting must protect the components involved, and be at least 250 psig. The discharge must be directed upward and away from component parts of the equipment and away from operating personnel.

(5) Vaporizer-burners must have means for manually turning off the gas to the main burner and pilot.

(6) Vaporizer-burners must have automatic safety devices to shut off the flow of gas to the main burner and pilot in the event the pilot is extinguished.

(7) Pressure regulating and control equipment must be located or protected so that the temperatures surrounding this equipment shall not exceed 140°F.

Exception: Equipment components may be used at higher temperatures if designed to withstand such temperatures.

(8) Pressure regulating and control equipment when located downstream of the vaporizer must be designed to withstand the maximum discharge temperature of the vapor.

(9) Fusible plugs are prohibited on the vaporizer section of vaporizer-burners.

(10) Vaporizer coils or jackets must be made of ferrous metal or high temperature alloys.

(11) Equipment utilizing vaporizer-burners must have automatic shutoff devices upstream and downstream of the vaporizer section connected so as to operate in the event of excessive temperature, flame failure, and, if applicable, insufficient airflow.

[97-09-013, recodified as § 296-307-41035, filed 4/7/97, effective 4/7/97. Statutory Authority: RCW 49.17.040, [49.17.]050 and [49.17.]060. 96-22-048, § 296-306A-41035, filed 10/31/96, effective 12/1/96.]

WAC 296-307-41037 What are the maximum filling densities? (1) "Filling density" means the percent ratio of the

weight of the gas in a container to the weight of water the container will hold at 60°F. All containers shall be filled according to the filling densities shown in Table U-4.

TABLE U-4
MAXIMUM PERMITTED FILLING DENSITY

	Aboveground containers		
Specifc Gravity at 60°F (15.6°C)	0 to 1,200 U.S. gals. (1,000 imp. gal. 4,500 liters) total water cap	0 to 1,200 U.S. gals. (1,000 imp. gal. 4,500 liters) total water cap	Underground containers, all capacities
	Percent	Percent	Percent
.496-.503	41	44	45
.504-.510	42	45	46
.511-.519	43	46	47
.520-.527	44	47	48
.528-.536	45	48	49
.537-.544	46	49	50
.545-.552	47	50	51
.553-.560	48	51	52
.561-.568	49	52	53
.569-.576	50	53	54
.577-.584	51	54	55
.585-.592	52	55	56
.593-.600	53	56	57

(2) Any container including mobile cargo tanks and portable tank containers regardless of size or construction, shipped under DOT jurisdiction or constructed according to DOT specifications must be charged according to DOT requirements.

(3) Exception: Portable containers not subject to DOT jurisdiction must be filled either by weight, or by volume using a fixed length dip tube gauging device.

[97-09-013, recodified as § 296-307-41037, filed 4/7/97, effective 4/7/97. Statutory Authority: RCW 49.17.040, [49.17.]050 and [49.17.]060. 96-22-048, § 296-306A-41037, filed 10/31/96, effective 12/1/96.]

WAC 296-307-41039 What requirements apply to LP-gas in buildings? (1) Vapor may be piped into buildings at pressures over 20 psig only if the buildings or separate areas thereof:

(a) Are constructed according to this section;

(b) Are used exclusively to house equipment for vaporization, pressure reduction, gas mixing, gas manufacturing, or distribution, or to house internal combustion engines, industrial processes, research and experimental laboratories, or equipment and processes using such gas and having similar hazard;

(c) Are buildings, structures, or equipment under construction or undergoing major renovation.

(2) Liquid may be permitted in buildings as follows:

(a) In buildings, or separate areas of buildings, used exclusively to house equipment for vaporization, pressure reduction, gas mixing, gas manufacturing, or distribution, or to house internal combustion engines, industrial processes, research and experimental laboratories, or equipment and processes using such gas and having similar hazard; and when such buildings, or separate areas are constructed according to this section.

(b) In buildings, structures, or equipment under construction or undergoing major renovation if the temporary piping meets the following conditions:

(i) Liquid piping inside the building meets the requirements of WAC 296-307-41021 and is a maximum of three-fourths iron pipe size. Copper tubing with an outside diameter of 3/4 inch or less may be used if it meets the requirements of Type K of Specifications for Seamless Water Tube, ANSI H23.1-1970 (ASTM B88-1969). (See Table U-2.) All such piping must be protected against construction hazards. Liquid piping inside buildings must be kept to a minimum. Such piping must be securely fastened to walls or other surfaces to provide adequate protection from breakage and located to subject the liquid line to the lowest ambient temperatures.

(ii) A shut-off valve must be installed in each intermediate branch line where it takes off the main line and must be readily accessible. A shut-off valve must also be placed at the appliance end of the intermediate branch line. Such shut-off valve must be upstream of any flexible connector used with the appliance.

(iii) Suitable excess flow valves must be installed in the container outlet line supplying liquid LP-gas to the building. A suitable excess flow valve must be installed immediately downstream of each shut-off valve. Excess flow valves must be installed where piping size is reduced and must be sized appropriately.

(iv) Hydrostatic relief valves must be installed according to WAC 296-307-41025(13).

(v) Using hose to carry liquid between the container and the building or at any point in the liquid line, except at the appliance connector, is prohibited.

(vi) Where flexible connectors are necessary for appliance installation, such connectors must be as short as practical and must meet the requirements of WAC 296-307-41021(4) or 296-307-41023.

(vii) Release of fuel when any section of piping or appliances is disconnected must be minimized by either of the following methods:

(A) Using an approved automatic quick-closing coupling (closing in both directions when coupled in the fuel line); or

(B) Closing the valve nearest to the appliance and allowing the appliance to operate until the fuel in the line is consumed.

(viii) See WAC 296-307-41509 for the conditions under which portable containers may be brought indoors.

[Statutory Authority: RCW 49.17.040. 98-24-096, § 296-307-41039, filed 12/1/98, effective 3/1/99. 97-09-013, recodified as § 296-307-41039, filed 4/7/97, effective 4/7/97. Statutory Authority: RCW 49.17.040, [49.17.]050 and [49.17.]060. 96-22-048, § 296-306A-41039, filed 10/31/96, effective 12/1/96.]

WAC 296-307-41041 What requirements apply to transfer of liquids? When transferring liquids, you must ensure that:

(1) At least one attendant remains close to the transfer connection from the time the connections are first made until they are finally disconnected, during the transfer of the product.

(2) Containers must be filled or used only upon authorization of the owner.

(3) Containers manufactured according to DOT specifications authorized by DOT as a "single trip" or "nonrefillable container" must not be refilled or reused in LP-gas service.

(4) Gas or liquid must not be vented to the atmosphere to assist in transferring contents of one container to another, except as provided in WAC 296-307-42509(4). A listed pump may use LP-gas in the vapor phase as a source of energy. The gas may be vented to the atmosphere at a rate not to exceed that from a No. 31 drill size opening, if venting and liquid transfer are located at least 50 feet from the nearest important building.

(5) Filling fuel containers for industrial trucks or motor vehicles from industrial bulk storage containers must be performed at least ten feet from the nearest important masonry-walled building or at least twenty-five feet from the nearest important building or other construction and always at least 25 feet from any building opening.

(6) Filling portable containers, containers mounted on skids, fuel containers on farm tractors, or similar applications, from storage containers used in domestic or commercial service, must be performed at least 50 feet from the nearest important building.

(7) The filling connection and the vent from the liquid level gauges in containers, filled at point of installation, must be at least ten feet in any direction from air openings into sealed combustion system appliances or mechanical ventilation air intakes.

(8) Fuel supply containers must be gauged and charged only in the open air or in buildings especially provided for that purpose.

(9) Marketers and users must exercise precaution to ensure that only those gases for which the system is designed, examined, and listed, are employed in its operation, particularly with regard to pressures.

(10) Pumps or compressors must be designed for use with LP-gas. When compressors are used they must normally take suction from the vapor space of the container being filled and discharge to the vapor space of the container being emptied.

(11) Pumping systems, when equipped with a positive displacement pump, must include a recirculating device that limits the differential pressure on the pump under normal operating conditions to the maximum differential pressure rating of the pump. The discharge of the pumping system must be protected so that pressure is a maximum of 350 psig. If a recirculation system discharges into the supply tank and contains a manual shut-off valve, an adequate secondary safety recirculation system must be incorporated that has no means of rendering it inoperative. Manual shut-off valves in recirculation systems must be kept open except during an emergency or when repairs are being made to the system.

(12) When necessary, unloading piping or hoses must have suitable bleeder valves for relieving pressure before disconnection.

(13) Agricultural air moving equipment, including crop dryers, shall be shut down when supply containers are filling unless the air intakes and sources of ignition on the equipment are located 50 feet or more from the container.

(14) Agricultural equipment employing open flames or equipment with integral containers, such as flame cultivators, weed burners, and tractors, must be shut down during refueling.

[Statutory Authority: RCW 49.17.040. 98-24-096, § 296-307-41041, filed 12/1/98, effective 3/1/99. 97-09-013, recodified as § 296-307-41041, filed 4/7/97, effective 4/7/97. Statutory Authority: RCW 49.17.040, [49.17.]050 and [49.17.]060. 96-22-048, § 296-306A-41041, filed 10/31/96, effective 12/1/96.]

WAC 296-307-41043 Must workers be trained? Workers performing installation, removal, operation, and maintenance work must be properly trained in that function.

[97-09-013, recodified as § 296-307-41043, filed 4/7/97, effective 4/7/97. Statutory Authority: RCW 49.17.040, [49.17.]050 and [49.17.]060. 96-22-048, § 296-306A-41043, filed 10/31/96, effective 12/1/96.]

WAC 296-307-41045 What fire protection must be provided for LP-gas installations? (1) Open flames or other sources of ignition are prohibited in vaporizer rooms (except those housing direct-fired vaporizers), pumphouses, container charging rooms or other similar locations. Direct-fired vaporizers are prohibited in pumphouses or container charging rooms.

Note: LP-gas storage containers do not require lightning protection. Since LP-gas is contained in a closed system of piping and equipment, the system need not be electrically conductive or electrically bonded for protection against static electricity. (See NFPA No. 77-1972-1973, Recommended Practice for Static Electricity.)

(2) Open flames (except as provided in subsection (1) of this section), cutting or welding, portable electric tools, and extension lights capable of igniting LP-gas, are prohibited within classified areas specified in Table U-5 unless the LP-gas facilities have been freed of all liquid and vapor, or special precautions observed under carefully controlled conditions.

[97-09-013, recodified as § 296-307-41045, filed 4/7/97, effective 4/7/97. Statutory Authority: RCW 49.17.040, [49.17.]050 and [49.17.]060. 96-22-048, § 296-306A-41045, filed 10/31/96, effective 12/1/96.]

WAC 296-307-41047 What electrical requirements apply to LP-gas installations? (1) Electrical equipment and wiring must be specified by and installed according to chapter 296-307 WAC Part T, for ordinary locations.

(2) Fixed electrical equipment and wiring installed within classified areas must comply with Table U-5 and must be installed according to chapter 296-307 WAC Part T.

EXCEPTION: This provision does not apply to fixed electrical equipment at residential or commercial installations of LP-gas systems, LP-gas used as a motor fuel, or to LP-gas system installations on commercial vehicles.

TABLE U-5

Part	Location	Extent of classified area[1]	Equipment shall be suitable for Class I, Group D[2]
A	Storage containers other than DOT cylinders	Within 15 feet in all directions from connections, except connections otherwise covered in this table	Division 2
B	Tank vehicle and tank car loading and unloading[3]	Within 5 feet in all directions from connections regularly made or disconnected for product transfer	Division 1

Part	Location	Extent of classified area[1]	Equipment shall be suitable for Class I, Group D[2]
		Beyond 5 feet but within 15 feet in all directions from a point where connections are regularly made or disconnected and within the cylindrical volume between the horizontal equator of the sphere and grade (See Figure H-1)	Division 2
C	Gauge vent openings other than those on DOT cylinders	Within 5 feet in all directions from point of discharge	Division 1
		Beyond 5 feet but within 15 feet in all directions from point of discharge	Division 2
D	Relief valve discharge other than those on DOT cylinders	Within direct path of discharge	Division 1 *Note*: Fixed electrical equipment should not be installed
		Within 5 feet in all directions from point of discharge	Division 1
		Beyond 5 feet but within 15 feet in all directions from point of discharge except within the direct path of discharge	Division 2
E	Pumps, compressors, gas-air mixers and vaporizers other than direct fired		
	Indoors without ventilation	Entire room and any adjacent room not separated by a gastight partition	Division 1
		Within 15 feet of the exterior side of any exterior wall or roof that is not vaportight or within 15 feet of any exterior opening	Division 2
	Indoors with adequate ventilation[4]	Entire room and any adjacent room not separated by a gastight partition	Division 2
	Outdoors in open air at or above grade	Within 15 feet in all directions from this equipment and within the cylindrical volume between the horizontal equator of the sphere and grade (See Figure H-1)	Division 2
F	Service station dispensing units	Entire space within dispenser enclosure, and 18 inches horizontally from enclosure exterior up to an elevation 4 ft. above dispenser base. Entire pit or open space beneath dispenser	Division 1
		Up to 18 inches above grade within 20 ft. horizontally from any edge of enclosure	Division 2
		Note: For pits within this area, see Part F of this table	
G	Pits or trenches containing or located beneath LP-gas valves, pumps, compressors, regulators, and similar equipment		
	Without mechanical ventilation	Entire pit or trench	Division 1
		Entire room and any adjacent room not separated by a gastight partition	Division 2
		Within 15 feet in all directions from pit or trench when located outdoors	Division 2
	With adequate mechanical ventilation	Entire pit or trench	Division 2
		Entire room and any adjacent room not separated by a gastight partition	Division 2
		Within 15 feet in all directions from pit or trench when located outdoors	Division 2
H	Special buildings or rooms for storage of portable containers	Entire room	Division 2
I	Pipelines and connections containing operational bleeds, drips, vents or drains	Within 5 ft. in all directions from point of discharge	Division 1
		Beyond 5 ft. from point of discharge, same as Part E of this table	
J	Container filling		
	Indoors without ventilation	Entire room	Division 1
	Indoors with adequate ventilation[4]	Within 5 feet in all directions from connections regularly made or disconnected for product transfer	Division 1
		Beyond 5 feet and entire room	Division 2
	Outdoors in open air	Within 5 feet in all directions from connections regularly made or disconnected for product transfer	Division 1
		Beyond 5 feet but within 15 feet in all directions from a point where connections are regularly made or disconnected and within the cylindrical volume between the horizontal equator of the sphere and grade (See Fig. H-1.)	Division 2

[1]The classified area must not extend beyond an unpierced wall, roof, or solid vaportight partition.

[2]See chapter 296-46 WAC, and chapter 296-306A WAC Part T.

[3]When classifying the extent of a hazardous area, consider the possible variations in the spotting of tank cars and tank vehicles at the unloading points and the effect these variations of actual spotting point may have on the point of connection.

[4]Ventilation, either natural or mechanical, is considered adequate when the concentration of the gas in a gas-air mixture does not exceed twenty-five percent of the lower flammable limit under normal operating conditions.

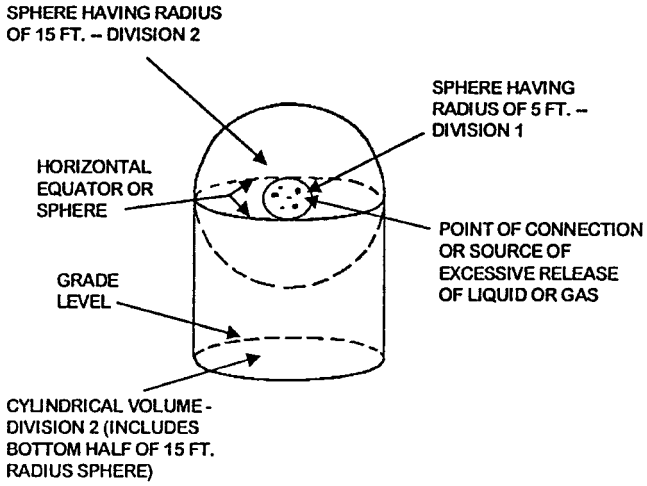

[Statutory Authority: RCW 49.17.040. 98-24-096, § 296-307-41047, filed 12/1/98, effective 3/1/99. 97-09-013, recodified as § 296-307-41047, filed 4/7/97, effective 4/7/97. Statutory Authority: RCW 49.17.040, [49.17.]050 and [49.17.]060. 96-22-048, § 296-306A-41047, filed 10/31/96, effective 12/1/96.]

WAC 296-307-41049 What requirements apply to liquid-level gauging devices? (1) Each container manufactured after December 31, 1965, and filled on a volumetric basis must have a fixed liquid-level gauge to indicate the maximum permitted filling level according to subsection (5) of this section. Each container manufactured after December 31, 1969, must have permanently attached to the container adjacent to the fixed level gauge a marking showing the percentage full that will be shown by that gauge. When used with a variable liquid-level gauge, the fixed liquid-level gauge will act as a check on the variable gauge. Gauges must be used in charging containers as required in WAC 296-307-41034.

(2) All variable gauging devices must be arranged so that the maximum liquid level for butane, for a 50/50 mixture of butane and propane, and for propane, to which the container may be charged, is easily determined. Liquid levels from empty to full must be marked on the system nameplate or gauging device. Dials of magnetic or rotary gauges must show whether they are for cylindrical or spherical containers and whether for aboveground or underground service. The dials of gauges for aboveground containers of over 1,200 gallons water capacity must be so marked.

(3) Gauging devices that require bleeding of the product to the atmosphere, such as the rotary tube, fixed tube, and slip tube, shall be designed so that the bleed valve maximum opening is not larger than a No. 54 drill size, unless provided with excess flow valve.

(4) Gauging devices must have a design working pressure of at least 250 psig.

(5) Length of tube or position of fixed liquid-level gauge must be designed to indicate the maximum level to which the container may be filled for the product contained. This level shall be based on the volume of the product at 40°F at its maximum permitted filling density for aboveground containers and at 50°F for underground containers. You must calculate the filling point for which the fixed liquid level gauge must be designed according to this section.

Note: It is impossible to set out in a table the length of a fixed dip tube for various tank capacities because of the various tank diameters and lengths, and because the tank may be installed either vertically or horizontally. If you know the maximum permitted filling volume in gallons, however, you can determine the length of the fixed tube by using a strapping table from the container manufacturer.

The fixed tube should be long enough so that when its lower end touches the surface of the liquid in the container, the contents of the container will be the maximum permitted volume as determined by the following formula:

$$\frac{\text{Water capacity of container}^{1}\text{ (gals.) X filling density}^{2}}{\text{Specific gravity of LP-gas}^{1}\text{ x volume correction factor}^{3}\text{ x 100}} = \text{Maximum volume of LP-gas}$$

1 Measure at 60°F.

2 From WAC 296-307-41037(1).

3 For aboveground containers the liquid temperature is assumed to be 40°F and for underground containers the liquid temperature is assumed to be 50°F. To correct the liquid volumes at these temperatures to 60°F, use the following factors:

(a) To determine maximum volume of LP-gas for which a fixed length of dip tube must be set:

TABLE U-6
VOLUME CORRECTION FACTORS

Specific gravity	Aboveground	Underground
0.500	1.033	1.017
.510	1.031	1.016
.520	1.029	1.015
.530	1.028	1.014
.540	1.026	1.013
.550	1.025	1.013
.560	1.024	1.012
.570	1.023	1.011
.580	1.021	1.011
.590	1.020	1.010

(b) To calculate the maximum volume of LP-gas that can be placed in a container when determining the length of the dip tube expressed as a percentage of total water content of the container, use the formula in (c) of this subsection.

(c) Determine the maximum weight of LP-gas that may be placed in a container for determining the length of a fixed dip tube by multiplying the maximum volume of LP-gas from Table U-6 by the pounds of LP-gas in a gallon at 40°F for aboveground and at 50°F for underground containers. Typical pounds per gallon are specified below:

Example: Assume a one hundred gallon total water capacity tank for aboveground storage of propane having a specific gravity of 0.510 of 60°F.

$$\frac{\text{100 (gals.) x 42 (filling density)}}{\text{0.510 x 1.031 (correction factor from Table U-6) x 100}} = \frac{4200}{52.6}$$

$$\frac{4200}{52.6} = \text{79.8 gallons propane, the maximum amount permitted to be placed in a 100-gallon total water capacity above ground container equipped with a fixed dip tube.}$$

$$\frac{\text{Maximum volume of LP-gas (from formula in (a) of this subsection) x 100}}{\text{Total water content of container in gallons}} = \text{Maximum percent of LP-gas}$$

	Aboveground, pounds per gallon	Underground, pounds per gallon
Propane	4.37	4.31
N Butane	4.97	4.92

(6) Fixed liquid-level gauges used on non-DOT containers must be stamped on the exterior of the gauge with the letters DT followed by the vertical distance (expressed in inches and carried out to one decimal place) from the top of container to the end of the dip tube or to the centerline of the gauge when located at the maximum permitted filling level. For portable containers that may be filled in the horizontal and/or vertical position the letters DT must be followed by V with the vertical distance from the top of the container to the end of the dip tube for vertical filling, and with H followed by the proper distance for horizontal filling. For DOT containers the stamping must be placed both on the exterior of the gauge and on the container. On aboveground or cargo containers where the gauges are positioned at specific levels, the marking may be specified in percent of total tank contents and the marking must be stamped on the container.

(7) Columnar gauge glasses must be restricted to charging plants where the fuel is withdrawn in the liquid phase only. They must have valves with metallic handwheels, excess flow valves, and extra-heavy glass adequately protected with a metal housing applied by the gauge manufacturer. They must be shielded against the direct rays of the sun. Columnar gauge glasses are prohibited on tank trucks, motor fuel tanks, and containers used in domestic, commercial, and industrial installations.

(8) Float gauging devices or equivalent that do not require flow for their operation and that have connections extending outside the container do not have to have excess flow valves if the piping and fittings are adequately designed to withstand the container pressure and are properly protected against physical damage and breakage.

[Statutory Authority: RCW 49.17.040. 98-24-096, § 296-307-41049, filed 12/1/98, effective 3/1/99. 97-09-013, recodified as § 296-307-41049, filed 4/7/97, effective 4/7/97. Statutory Authority: RCW 49.17.040, [49.17.]050 and [49.17.]060. 96-22-048, § 296-306A-41049, filed 10/31/96, effective 12/1/96.]

WAC 296-307-41051 What requirements apply to appliances? (1) New commercial and industrial gas consuming appliances must be approved.

Exception: Any appliance that was originally manufactured for operation with a gaseous fuel other than LP-gas and is in good condition may be used with LP-gas only after it is properly converted, adapted, and tested for performance with LP-gas before the appliance is placed in use.

(2) Unattended heaters used inside buildings for the purpose of animal or poultry production or care must have an approved automatic device designed to shut off the flow of gas to the main burners, and pilot if used, in case the flame goes out.

(3) All commercial, industrial, and agricultural appliances or equipment must be installed according to the requirements of these standards and according to the following:

(a) Domestic and commercial appliances, NFPA 54-1969, Standard for the Installation of Gas Appliances and Gas Piping.

(b) Industrial appliances, NFPA 54A-1969, Standard for the Installation of Gas Piping and Gas Equipment on Industrial Premises and Certain Other Premises.

(c) Standard for the Installation and Use of Stationary Combustion Engines and Gas Turbines, NFPA 37-1970.

(d) Standard for the Installation of Equipment for the Removal of Smoke and Grease-Laden Vapors from Commercial Cooking Equipment, NFPA 96-1970.

[97-09-013, recodified as § 296-307-41051, filed 4/7/97, effective 4/7/97. Statutory Authority: RCW 49.17.040, [49.17.]050 and [49.17.]060. 96-22-048, § 296-306A-41051, filed 10/31/96, effective 12/1/96.]

WAC 296-307-415 Cylinder systems.

[97-09-013, recodified as § 296-307-415, filed 4/7/97, effective 4/7/97. Statutory Authority: RCW 49.17.040, [49.17.]050 and [49.17.]060. 96-22-048, § 296-306A-415, filed 10/31/96, effective 12/1/96.]

WAC 296-307-41501 What does this section cover? WAC 296-307-415 applies to systems using DOT containers. Cylinder systems must meet all requirements of WAC 296-307-410 (unless otherwise indicated) and the additional requirements of this section.

[Statutory Authority: RCW 49.17.040. 98-24-096, § 296-307-41501, filed 12/1/98, effective 3/1/99. 97-09-013, recodified as § 296-307-41501, filed 4/7/97, effective 4/7/97. Statutory Authority: RCW 49.17.040, [49.17.]050 and [49.17.]060. 96-22-048, § 296-306A-41501, filed 10/31/96, effective 12/1/96.]

WAC 296-307-41503 What is a "cylinder system"? A "cylinder system" includes the container base or bracket, containers, container valves, connectors, manifold valve assembly, regulators, and relief valves.

[97-09-013, recodified as § 296-307-41503, filed 4/7/97, effective 4/7/97. Statutory Authority: RCW 49.17.040, [49.17.]050 and [49.17.]060. 96-22-048, § 296-306A-41503, filed 10/31/96, effective 12/1/96.]

WAC 296-307-41505 How must containers be marked for cylinder systems? (1) Containers must be marked according to DOT regulations. Additional markings that do not conflict with DOT regulations may be used.

(2) Each container must be marked with its water capacity in pounds or other identified unit of weight.

(3) Exception: If you are the only one who fills and maintains the container and if the water capacity of the container is identified by a code, subsection (2) of this section does not apply.

(4) Each container must be marked with its tare weight in pounds or other identified unit of weight including all permanently attached fittings but not the cap.

[97-09-013, recodified as § 296-307-41505, filed 4/7/97, effective 4/7/97. Statutory Authority: RCW 49.17.040, [49.17.]050 and [49.17.]060. 96-22-048, § 296-306A-41505, filed 10/31/96, effective 12/1/96.]

WAC 296-307-41507 What additional requirements apply to cylinder systems installed outdoors? (1) Containers must not be buried below ground. However, systems may be installed in a compartment or recess below grade level, such as a niche in a slope or terrace wall that is used for no other purpose, if the container and regulating equipment are not in contact with the ground, and the compartment or recess is drained and ventilated horizontally to the outside air from its lowest level, with the outlet at least 3 feet away from any building opening below the level of the outlet.

(2) Except as provided in WAC 296-307-41025(14), the discharge from safety-relief devices must be located at least three feet away from any building opening that is below the level of discharge and must not terminate beneath any build-

ing unless the space is well ventilated to the outside and is not enclosed on more than two sides.

(3) Containers must be set on firm foundation or otherwise firmly secured; the possible effect of settling on the outlet piping must be guarded against by a flexible connection or special fitting.

[Statutory Authority: RCW 49.17.040. 98-24-096, § 296-307-41507, filed 12/1/98, effective 3/1/99. 97-09-013, recodified as § 296-307-41507, filed 4/7/97, effective 4/7/97. Statutory Authority: RCW 49.17.040, [49.17.]050 and [49.17.]060. 96-22-048, § 296-306A-41507, filed 10/31/96, effective 12/1/96.]

WAC 296-307-41509 What additional requirements apply to cylinder system installed indoors? (1) When portable containers are necessary and it is not practical to use them outdoors, containers and equipment may be used indoors only if they meet the requirements of this section.

(a) "Containers in use" means connected for use.

(b) Systems using containers with a water capacity greater than 2-1/2 pounds (nominal one pound LP-gas capacity) must have excess flow valves. Such excess flow valves must be either integral with the container valves or in the connections to the container valve outlets. In either case, an excess flow valve must be installed so that any strain beyond the excess flow valve will not cause breakage between the container and the excess flow valve. The installation of excess flow valves must take into account the type of valve protection provided.

(c) Regulators must be either directly connected to the container valves or to manifolds connected to the container valves. The regulator must be suitable for use with LP-gas. Manifolds and fittings connecting containers to pressure regulator inlets must be designed for at least 250 psig service pressure.

(d) Valves on containers having a water capacity greater than fifty pounds (nominal twenty pounds LP-gas capacity) must be protected while in use.

(e) Aluminum pipe or tubing is prohibited.

(f) Hose must be designed for a working pressure of at least 250 psig. Hose and hose connections shall be listed by a nationally recognized testing laboratory.

(i) Hose must be as short as practical.

(ii) Hose must be long enough to allow required spacing without kinking, straining, or allowing hose to be close enough to a burner to be damaged by heat.

(g) Portable heaters, including salamanders, must have an approved automatic device to shut off the flow of gas to the main burner, and pilot if used, in case the flame goes out. Heaters with inputs above 50,000 Btu manufactured on or after May 17, 1967, and heaters with inputs above 100,000 Btu manufactured before May 17, 1967, must have either:

(i) A pilot that must be lighted and proved before the main burner can be turned on; or

(ii) An electric ignition system;

(iii) Container valves, connectors, regulators, manifolds, piping, and tubing must not be used as structural supports for heaters.

Exception: These requirements do not apply to tar kettle burners, torches, melting pots, nor do they apply to portable heaters under 7,500 Btuh input when used with containers with a maximum water capacity of 2-1/2 pounds.

(h) Containers, regulating equipment, manifolds, piping, tubing, and hose must be located to minimize exposure to abnormally high temperatures (such as may result from exposure to convection or radiation from heating equipment or installation in confined spaces), physical damage, or tampering.

(i) Heat producing equipment must be located and used to minimize the possibility of igniting combustibles.

(j) Containers with water capacity greater than 2-1/2 pounds (nominal one pound LP-gas capacity) connected for use, must stand on a firm and substantially level surface and, when necessary, must be secured in an upright position.

(k) Containers, including the valve protective devices, must be installed to minimize the probability of impingement of discharge of safety-relief devices upon containers.

(2) Containers with a maximum water capacity of 2-1/2 pounds (nominal one pound LP-gas capacity) may be used indoors as part of approved self-contained hand torch assemblies or similar appliances.

(3) When buildings frequented by the public are open to the public, containers may be used for repair or minor renovation as follows:

(a) The maximum water capacity of individual containers must be 50 pounds (nominal twenty pounds LP-gas capacity).

(b) The number of LP-gas containers must not exceed the number of employees assigned to use LP-gas.

(c) Containers with a water capacity greater than 2-1/2 pounds (nominal one pound LP-gas capacity) must be attended at all times.

(4) When buildings frequented by the public are closed to the public, containers may be used in buildings or structures for repairs or minor renovation as follows:

(a) The maximum water capacity of individual containers must be 245 pounds (nominal one hundred pounds LP-gas capacity).

(b) For temporary heating such as curing concrete, drying plaster and similar applications, heaters (other than integral heater-container units) must be located at least six feet from any LP-gas container. You may use heaters specifically designed for attachment to the container or to a supporting standard, if they are designed and installed to prevent direct or radiant heat application from the heater onto the container. Blower and radiant type heater must not be directed toward any LP-gas container within 20 feet.

(c) If two or more heater-container units are located in an unpartitioned area on the same floor, the container or containers of each unit must be separated from the container or containers of any other unit by at least 20 feet.

(d) When heaters are connected to containers for use in an unpartitioned area on the same floor, the total water capacity of containers manifolded together for connection to a heater or heaters shall not be greater than 735 pounds (nominal three hundred pounds LP-gas capacity). Such manifolds must be separated by at least 20 feet.

(e) On floors on which heaters are not connected for use, containers may be manifolded together for connection to a heater or heaters on another floor, if:

(i) The total water capacity of containers connected to any one manifold is a maximum of 2,450 pounds (nominal one thousand pounds LP-gas capacity) and;

(ii) Where more than one manifold having a total water capacity greater than 735 pounds (nominal three hundred pounds LP-gas capacity) are located in the same unpartitioned area, they shall be separated by at least 50 feet.

(f) Containers with a water capacity greater than 2-1/2 pounds (nominal one pound LP-gas capacity) must be attended at all times.

(5) Containers may be used in industrial occupancies for processing, research, or experimental purposes as follows:

(a) The maximum water capacity of individual containers must be 245 pounds (nominal one hundred pounds LP-gas capacity).

(b) Containers connected to a manifold must have a total water capacity of a maximum of 735 pounds (nominal three hundred pounds LP-gas capacity) and only one manifold may be located in the same room unless separated at least 20 feet from a similar unit.

(c) LP-gas in containers for research and experimental use must use the smallest practical quantity.

(6) Containers used in industrial occupancies with essentially noncombustible contents where portable equipment for space heating is essential and where a permanent heating installation is not practical, must meet the requirements of subsection (5) of this section.

(7) Containers may be used in buildings for temporary emergency heating purposes, if necessary to prevent damage to the buildings or contents, when the permanent heating system is temporarily out of service, as follows:

(a) Containers and heaters must meet the requirements of subsection (5) of this section.

(b) The temporary heating equipment must be attended at all times.

(8) Containers may be used temporarily in buildings for training purposes related in installation and use of LP-gas systems, as follows:

(a) The maximum water capacity of individual containers must be 245 pounds (nominal one hundred pounds LP-gas capacity), but the maximum quantity of LP-gas that may be placed in each container is 20 pounds.

(b) If more than one container is located in the same room, the containers must be separated by at least 20 feet.

(c) Containers must be removed from the building when the training class has terminated.

[97-09-013, recodified as § 296-307-41509, filed 4/7/97, effective 4/7/97. Statutory Authority: RCW 49.17.040, [49.17.]050 and [49.17.]060. 96-22-048, § 296-306A-41509, filed 10/31/96, effective 12/1/96.]

WAC 296-307-41511 What requirements apply to valves and accessories? (1) Valves in the assembly of multiple container systems must be arranged so that containers can be replaced without shutting off the flow of gas in the system.

Note: An automatic changeover device is not required.

(2) Regulators and low-pressure relief devices must be rigidly attached to the cylinder valves, cylinders, supporting standards, the building walls or otherwise rigidly secured and must be installed or protected so that weather will not affect their operation.

(3) Valves and connections to the containers must be protected while in transit, in storage, and while being moved into final use, as follows:

(a) By setting into the recess of the container to prevent the possibility of being struck if the container is dropped on a flat surface; or

(b) By ventilated cap or collar, fastened to the container capable of withstanding a blow from any direction equivalent to that of a 30-pound weight dropped four feet. Construction must ensure that a blow will not be transmitted to the valve or other connection.

(4) When containers are not connected to the system, the outlet valves must be kept tightly closed or plugged, even on empty containers.

(5) Containers having a water capacity in excess of 50 pounds (approximately 21 pounds LP-gas capacity), recharged at the installation, must have excess flow or backflow check valves to prevent the discharge of container contents in case of failure of the filling or equalizing connection.

[97-09-013, recodified as § 296-307-41511, filed 4/7/97, effective 4/7/97. Statutory Authority: RCW 49.17.040, [49.17.]050 and [49.17.]060. 96-22-048, § 296-306A-41511, filed 10/31/96, effective 12/1/96.]

WAC 296-307-41513 What requirements apply to safety devices for cylinder systems? (1) Containers must have safety devices as required by DOT regulations.

(2) A final stage regulator of an LP-gas system (excluding any appliance regulator) must have, on the low-pressure side, a relief valve that is set to start to discharge within the limits specified in Table U-7.

TABLE U-7

	Relief valve start-to-discharge pressure setting (percent of regulator delivery pressure)	
Regulator delivery pressure	**Minimum**	**Maximum**
1 psig or less	200	300
Above 1 psig but not over 3 psig	140	200
Above 3 psig	125	200

(3) When a regulator or pressure relief valve is used indoors for other than purposes specified in WAC 296-307-41017(1), the relief valve and the space above the regulator and relief valve diaphragms shall be vented to the outside air with the discharge outlet located at least three feet horizontally away from any building opening that is below such discharge.

Exception: This requirement does not apply to individual appliance regulators when protection is otherwise provided, nor to WAC 296-307-41509 and 296-307-41025(14). In buildings devoted exclusively to gas distribution, the space above the diaphragm need not be vented to the outside.

[Statutory Authority: RCW 49.17.040. 98-24-096, § 296-307-41513, filed 12/1/98, effective 3/1/99. 97-09-013, recodified as § 296-307-41513, filed 4/7/97, effective 4/7/97. Statutory Authority: RCW 49.17.040, [49.17.]050 and [49.17.]060. 96-22-048, § 296-306A-41513, filed 10/31/96, effective 12/1/96.]

WAC 296-307-41515 What other requirements apply to cylinder systems? (1) Containers must not be reinstalled unless they are requalified according to DOT regulations.

(2) A product must not be placed in a container marked with a service pressure less than four-fifths of the maximum vapor pressure of product at 130°F.

[97-09-013, recodified as § 296-307-41515, filed 4/7/97, effective 4/7/97. Statutory Authority: RCW 49.17.040, [49.17.]050 and [49.17.]060. 96-22-048, § 296-306A-41515, filed 10/31/96, effective 12/1/96.]

WAC 296-307-420 Systems using non-DOT containers.

[97-09-013, recodified as § 296-307-420, filed 4/7/97, effective 4/7/97. Statutory Authority: RCW 49.17.040, [49.17.]050 and [49.17.]060. 96-22-048, § 296-306A-420, filed 10/31/96, effective 12/1/96.]

WAC 296-307-42001 What does this section cover? WAC 296-307-420 applies to systems using storage containers not constructed according to DOT specifications. Non-DOT containers must meet all requirements of WAC 296-307-410 (unless otherwise indicated) and the additional requirements of this section.

[Statutory Authority: RCW 49.17.040. 98-24-096, § 296-307-42001, filed 12/1/98, effective 3/1/99. 97-09-013, recodified as § 296-307-42001, filed 4/7/97, effective 4/7/97. Statutory Authority: RCW 49.17.040, [49.17.]050 and [49.17.]060. 96-22-048, § 296-306A-42001, filed 10/31/96, effective 12/1/96.]

WAC 296-307-42003 How must non-DOT containers be designed and classified? Storage containers must be designed and classified according to Table U-8.

TABLE U-8

		Minimum design pressures of container lb. per sp. in. gauge	
Container type	**For gases with vapor press. Not to exceed lb. per sp. in. gauge 100°F (37.8°C.)**	**1949 and earlier editions of ASME Code (Par. U-68, U-69)**	**1949 edition of Code (Par. U-200, U-201); 1950, 1952, 1956, 1959, 1962, 1965, and 1968 (Division I) editions of ASME Code; All editions of API-ASME Code[3]**
80[1]	80[1]	80[1]	100[1]
100	100	100	125
125	125	125	156
150	150	150	187
175	175	175	219
200[2]	215	200	250

[1]New type 80 storage containers have not been authorized since Dec. 31, 1947.

[2]Container type may be increased by increments of 25. The minimum design pressure of containers shall be 100% of the container type designations when constructed under 1949 or earlier editions of the ASME Code (Par. U-68 and U-69). The minimum design pressure of containers shall be 125% of the container type designation when constructed under:

1. The 1949 ASME Code (Par. U-200 and U-201);
2. 1950, 1952, 1956, 1959, 1962, 1965, and 1968 (Division I) editions of the ASME Code; and
3. All editions of the API-ASME Code.

[3]Construction of containers under the API-ASME Code is prohibited after July 1, 1961.

[97-09-013, recodified as § 296-307-42003, filed 4/7/97, effective 4/7/97. Statutory Authority: RCW 49.17.040, [49.17.]050 and [49.17.]060. 96-22-048, § 296-306A-42003, filed 10/31/96, effective 12/1/96.]

WAC 296-307-42005 What requirements apply to valves and accessories, filler pipes, and discharge pipes for non-DOT containers? (1) The filling pipe inlet terminal must not be located inside a building. For containers with a water capacity of 125 gallons or more, such terminals must be located at least 10 feet from any building, and preferably at least 5 feet from any driveway, and must have a protective housing.

(2) The filling connection must be fitted with one of the following:

(a) Combination back-pressure check valve and excess flow valve.

(b) One double or two single back-pressure check valves.

(c) A positive shut-off valve in conjunction with either:

(i) An internal back pressure valve; or

(ii) An internal excess flow valve.

(3) All openings in a container must have approved automatic excess flow valves unless otherwise exempt.

(4) An excess flow valve is not required in the withdrawal service line if the following requirements are met:

(a) The total water capacity is a maximum of 2,000 U.S. gallons.

(b) The discharge from the service outlet is controlled by a manually operated shut-off valve that is:

(i) Threaded directly into the service outlet of the container; or

(ii) Is an integral part of a substantial fitting threaded into or on the service outlet of the container; or

(iii) Threaded directly into a substantial fitting threaded into or on the service outlet of the container.

(c) The shut-off valve is equipped with an attached handwheel or the equivalent.

(d) The controlling orifice between the contents of the container and the outlet of the shut-off valve is a maximum of 5/16 inch in diameter for vapor withdrawal systems and 1/8 inch in diameter for liquid withdrawal systems.

(e) An approved pressure-reducing regulator is directly attached to the outlet of the shut-off valve and is rigidly supported, or an approved pressure-reducing regulator is attached to the outlet of the shut-off valve by means of a suitable flexible connection, if the regulator is adequately supported and properly protected on or at the tank.

(5) All inlet and outlet connections except safety-relief valves, liquid-level gauging devices and pressure gauges on containers of 2,000 gallons water capacity, or more, and on any container used to supply fuel directly to an internal combustion engine, must be labeled to designate whether they communicate with vapor or liquid space. Labels may be on valves.

(6) Instead of an excess flow valve, openings may be fitted with a quick-closing internal valve that must remain closed when not in operation. The internal mechanism for such valves may have a secondary control that must have a fusible plug (not over 220°F melting point) that will cause the internal valve to close automatically in case of fire.

(7) A maximum of two plugged openings may be used on a container of 2,000 gallons or less water capacity.

(8) Containers of 125 gallons water capacity or more manufactured after July 1, 1961, must have an approved device for liquid evacuation, the size of which must be 3/4 inch national pipe thread minimum. A plugged opening does not satisfy this requirement.

[97-09-013, recodified as § 296-307-42005, filed 4/7/97, effective 4/7/97. Statutory Authority: RCW 49.17.040, [49.17.]050 and [49.17.]060. 96-22-048, § 296-306A-42005, filed 10/31/96, effective 12/1/96.]

WAC 296-307-42007 What additional requirements apply to safety devices for non-DOT containers? (1) All safety devices must comply with the following:

(a) All container safety-relief devices must be located on the containers.

(b) In industrial and gas manufacturing plants, discharge pipe from safety-relief valves on pipe lines within a building must discharge upward and be piped to a point outside a building.

(c) Safety-relief device discharge terminals must be located to provide protection against physical damage and must be fitted with loose raincaps. Return bends and restrictive pipefittings are prohibited.

(d) If desired, discharge lines from two or more safety-relief devices located on the same unit, or similar lines from two or more different units, may be run into a common discharge header, if the cross-sectional area of the header is at least equal to the sum of the cross-sectional area of the individual discharge lines, and the setting of safety-relief valves are the same.

(e) Each storage container of over 2,000 gallons water capacity must have a suitable pressure gauge.

(f) A final stage regulator of an LP-gas system (excluding any appliance regulator) must have, on the low-pressure side, a relief valve that is set to start to discharge within the limits specified in Table U-7.

(g) When a regulator or pressure relief valve is installed indoors, the relief valve and the space above the regulator and relief valve diaphragms must be vented to the outside air with the discharge outlet located not less than 3 feet horizontally away from any opening into the building that is below such discharge.

Exception: This requirement does not apply to individual appliance regulators already protected. In buildings devoted exclusively to gas distribution, the space above the diaphragm need not be vented to the outside.

(2) Safety devices for aboveground containers must be provided as follows:

(a) Containers of 1,200 gallons water capacity or less that may contain liquid fuel when installed aboveground must have the rate of discharge required by WAC 296-307-41025(2) provided by a spring-loaded relief valve or valves. In addition to the required spring-loaded relief valve, a suitable fuse plug may be used if the total discharge area of the fuse plug for each container does not exceed 0.25 square inch.

(b) The fusible metal of the fuse plugs must have a yield temperature of 208°F minimum and 220°F maximum. Relief valves and fuse plugs must have direct communication with the vapor space of the container.

(c) On a container having a water capacity between 125 and 2,000 gallons, the discharge from the safety-relief valves must be vented away from the container upwards and unobstructed to the open air so that it prevents any impingement of escaping gas upon the container; loose-fitting rain caps shall be used. Suitable provision must be made for draining condensate that may accumulate in the relief valve or its discharge pipe.

(d) On containers of 125 gallons water capacity or less, the discharge from safety-relief devices must be located at least 5 feet horizontally away from any opening into the building below the level of such discharge.

(e) On a container having a water capacity greater than 2,000 gallons, the discharge from the safety-relief valves must be vented away from the container upwards to a point at least 7 feet above the container, and unobstructed to the open air so that it prevents any impingement of escaping gas upon the container; loose-fitting rain caps shall be used. Suitable provision must be made so that any liquid or condensate that may accumulate inside of the safety-relief valve or its discharge pipe will not render the valve inoperative. If a drain is used, the container, adjacent containers, piping, or equipment must be protected against impingement of flame resulting from ignition of product escaping from the drain.

(3) On all containers that are installed underground and that contain no liquid fuel until buried and covered, the rate of discharge of the spring-loaded relief valve installed thereon may be reduced to a minimum of 30% of the rate of discharge specified in WAC 296-307-41025(2). Containers so protected must remain covered after installation until the liquid fuel has been removed. Containers that may contain liquid fuel before being installed underground and before being completely covered with earth are aboveground containers when determining the rate of discharge requirement of the relief valves.

(4) On underground containers of over 2,000 gallons water capacity, the discharge from safety-relief devices must be piped directly upward to a point at least 7 feet above the ground.

(5) Where the manhole or housing may become flooded, the discharge from regulator vent lines must be above the highest probable water level. All manholes or housings must have ventilated louvers or equivalent, and the area of openings must be equal to or exceed the combined discharge areas of the safety-relief valves and other vent lines that discharge their content into the manhole housing.

(6) Safety devices for vaporizers must be provided as follows:

(a) Vaporizers of less than 1 quart total capacity, heated by the ground or the surrounding air, need not have safety-relief valves if adequate tests demonstrate that the assembly is safe without safety-relief valves.

(b) Fusible plugs are prohibited on vaporizers.

(c) In industrial and gas manufacturing plants, safety-relief valves on vaporizers within a building must be piped to a point outside the building and be discharged upward.

[Statutory Authority: RCW 49.17.040. 98-24-096, § 296-307-42007, filed 12/1/98, effective 3/1/99. 97-09-013, recodified as § 296-307-42007, filed 4/7/97, effective 4/7/97. Statutory Authority: RCW 49.17.040, [49.17.]050 and [49.17.]060. 96-22-048, § 296-306A-42007, filed 10/31/96, effective 12/1/96.]

WAC 296-307-42009 When may non-DOT containers be reinstalled? Containers may be reinstalled if they are free from harmful external corrosion or other damage. Where containers are reinstalled underground, the corrosion resistant coating must be put in good condition. Where containers are reinstalled aboveground, the safety devices and gauging devices must meet all requirements for aboveground containers.

[97-09-013, recodified as § 296-307-42009, filed 4/7/97, effective 4/7/97. Statutory Authority: RCW 49.17.040, [49.17.]050 and [49.17.]060. 96-22-048, § 296-306A-42009, filed 10/31/96, effective 12/1/96.]

WAC 296-307-42011 What is the maximum capacity allowed for non-DOT containers? A non-DOT storage container must have a maximum 90,000 gallons water capacity.

[97-09-013, recodified as § 296-307-42011, filed 4/7/97, effective 4/7/97. Statutory Authority: RCW 49.17.040, [49.17.]050 and [49.17.]060. 96-22-048, § 296-306A-42011, filed 10/31/96, effective 12/1/96.]

WAC 296-307-42013 How must non-DOT containers be installed? (1) Containers installed aboveground must have substantial masonry or noncombustible structural supports on firm masonry foundation, unless otherwise indicated.

(2) Aboveground containers must be supported as follows:

(a) Horizontal containers must be mounted on saddles that permit expansion and contraction. Structural metal supports may be used when they are protected against fire. Suitable means of preventing corrosion must be provided on that portion of the container in contact with the foundations or saddles.

(b) Containers of 2,000 gallons water capacity or less may be installed with nonfireproofed ferrous metal supports if mounted on concrete pads or footings, and if the distance from the outside bottom of the container shell to the concrete pad, footing, or the ground is a maximum of 24 inches.

(3) Any container may be installed with nonfireproofed ferrous metal supports if mounted on concrete pads or footings, and if the distance from the outside bottom of the container to the ground is a maximum of 5 feet, if the container is in an isolated location.

(4) Partially buried containers must meet the following requirements:

(a) The portion of the container below the surface and for a vertical distance not less than 3 inches above the surface of the ground is protected to resist corrosion, and the container is protected against settling and corrosion as required for fully buried containers.

(b) Partially buried containers must meet the same spacing requirements as underground tanks.

(c) Relief valve capacity must be the same as for aboveground containers.

(d) Container is protected against vehicular damage by location or other means.

(e) Partially buried containers must meet the same requirements for filling densities as for aboveground containers.

(5) Containers buried underground must be placed so that the top of the container is at least 6 inches below grade. Underground containers subject to abrasive action or physical damage must be:

(a) Placed not less than 2 feet below grade; or

(b) Otherwise protected against such physical damage.

It is not necessary to cover the portion of the container to which manhole and other connections are affixed. When necessary to prevent floating, containers must be securely anchored or weighted.

(6) Containers must be given a protective coating before being placed underground. This coating must be equivalent to hot-dip galvanizing or to two coatings of red lead followed by a heavy coating of coal tar or asphalt. In lowering the container into place, take care to prevent damage to the coating. Any damage to the coating must be repaired before backfilling.

Containers must be set on a firm foundation (firm earth may be used) and surrounded with earth or sand firmly tamped in place. Backfill should be free of rocks or other abrasive materials.

(7) Containers with foundations attached (portable or semiportable containers with suitable steel runners or skids popularly known as "skid tanks") must meet the requirements of WAC 296-307-410 and the following:

(a) If they are to be used at a given general location for a temporary period of 6 months at most, they may be without fire-resisting foundations or saddles but must have adequate ferrous metal supports.

(b) They must not be located with the outside bottom of the container shell more than 5 feet above the surface of the ground unless fire-resisting supports are provided.

(c) The bottom of the skids must be between 2 and 12 inches below the outside bottom of the container shell.

(d) Flanges, nozzles, valves, fittings, and the like, having communication with the interior of the container, must be protected against physical damage.

(e) When not permanently located on fire-resisting foundations, piping connections must be flexible enough to minimize breakage or leakage of connections if the container settles, moves, or is otherwise displaced.

(f) Skids, or lugs for attachment of skids, must be secured to the container according to the rules under which the container is designed and built (with a minimum factor of safety of four) to withstand loading in any direction equal to four times the weight of the container and attachments when filled to the maximum permissible loaded weight.

(8) Field welding where necessary must be made only on saddle plates or brackets that were applied by the manufacturer of the tank.

(9) For aboveground containers, secure anchorage or adequate pier height must be provided against possible container flotation wherever high floodwater might occur.

(10) When permanently installed containers are interconnected, you must allow for expansion, contraction, vibration, and settling of containers, and interconnecting piping. Where flexible connections are used, they must be approved and designed for a bursting pressure of at least five times the vapor pressure of the product at 100°F. Nonmetallic hose is prohibited for permanently interconnecting containers.

(11) Container assemblies listed for interchangeable installation aboveground or underground must meet the requirements for aboveground installations for safety-relief capacity and filling density. For installation aboveground all other requirements for aboveground installations apply. For installation underground all other requirements for underground installations apply.

[Statutory Authority: RCW 49.17.040. 98-24-096, § 296-307-42013, filed 12/1/98, effective 3/1/99. 97-09-013, recodified as § 296-307-42013, filed 4/7/97, effective 4/7/97. Statutory Authority: RCW 49.17.040, [49.17.]050

and [49.17.]060. 96-22-048, § 296-306A-42013, filed 10/31/96, effective 12/1/96.]

WAC 296-307-42015 How must non-DOT containers be protected? (1) Valves, regulating, gauging, and other container accessory equipment must be protected against tampering and physical damage. Such accessories must also be protected during the transit of containers intended for installation underground.

(2) On underground or combination aboveground-underground containers, the service valve handwheel, the terminal for connecting the hose, and the opening through which there can be a flow from safety-relief valves must be at least 4 inches above the container and this opening must be located in the dome or housing. Underground systems must be installed so that all openings, including the regulator vent, are located above the normal maximum water table.

(3) All connections to the underground containers must be located within a substantial dome, housing, or manhole, with access protected by a substantial cover.

[97-09-013, recodified as § 296-307-42015, filed 4/7/97, effective 4/7/97. Statutory Authority: RCW 49.17.040, [49.17.]050 and [49.17.]060. 96-22-048, § 296-306A-42015, filed 10/31/96, effective 12/1/96.]

WAC 296-307-42017 What requirements apply to non-DOT containers in industrial plants? General provisions applicable to systems in industrial plants (of 2,000 gallons water capacity and more) and to bulk filling plants.

(1) When standard watch service is provided, it must be extended to the LP-gas installation and personnel shall be properly trained.

(2) If loading and unloading are normally done during the night, adequate lights must be provided to illuminate storage containers, control valves, and other equipment.

(3) Suitable roadways or means of access for extinguishing equipment such as wheeled extinguishers or fire department apparatus must be provided.

(4) To minimize trespassing or tampering, the area that includes container accessories, pumping equipment, loading and unloading facilities, and cylinder-filling facilities must be enclosed with at least a 6-foot-high industrial fence unless otherwise adequately protected. There must be at least two means of emergency access.

[97-09-013, recodified as § 296-307-42017, filed 4/7/97, effective 4/7/97. Statutory Authority: RCW 49.17.040, [49.17.]050 and [49.17.]060. 96-22-048, § 296-306A-42017, filed 10/31/96, effective 12/1/96.]

WAC 296-307-42019 What requirements apply to container-charging plants? (1) The container-charging room must be located at least:

(a) Ten feet from bulk storage containers.

(b) Twenty-five feet from line of adjoining property that may be built on.

(2) Tank truck filling station outlets must be located at least:

(a) Twenty-five feet from line of adjoining property that may be built on.

(b) Ten feet from pumps and compressors if housed in one or more separate buildings.

(3) The pumps or compressors may be located in the container-charging room or building, in a separate building, or outside of buildings. When housed in separate building, such building (a small noncombustible weather cover is not to be construed as a building) must be located at least:

(a) Ten feet from bulk storage tanks.

(b) Twenty-five feet from line of adjoining property that may be built on.

(c) Twenty-five feet from sources of ignition.

(4) When a part of the container-charging building is to be used for a boiler room or where open flames or similar sources of ignition exist or are employed, the space to be occupied must be separated from container charging room by a partition wall or walls of fire-resistant construction continuous from floor to roof or ceiling. Such separation walls must be without openings and must be joined to the floor, other walls, and ceiling or roof to provide a permanent gas-tight joint.

[97-09-013, recodified as § 296-307-42019, filed 4/7/97, effective 4/7/97. Statutory Authority: RCW 49.17.040, [49.17.]050 and [49.17.]060. 96-22-048, § 296-306A-42019, filed 10/31/96, effective 12/1/96.]

WAC 296-307-42021 What fire protection must be provided for non-DOT containers? (1) Each bulk plant must have at least one approved portable fire extinguisher with a minimum rating of 12-B, C.

(2) In industrial installations involving containers of 150,000 gallons aggregate water capacity or more, you must provide an adequate supply of water at the container site for fire protection in the container area, unless other adequate means for fire control are provided. Water hydrants must be readily accessible and spaced to provide water protection for all containers. Enough firehose must be provided to facilitate easy movement of the hose in the container area. You should equip the outlet of each hose line with a combination fog nozzle. A shelter must be provided to protect the hose and its conveyor from the weather.

[97-09-013, recodified as § 296-307-42021, filed 4/7/97, effective 4/7/97. Statutory Authority: RCW 49.17.040, [49.17.]050 and [49.17.]060. 96-22-048, § 296-306A-42021, filed 10/31/96, effective 12/1/96.]

WAC 296-307-42023 What other requirements apply to non-DOT containers? (1) Aboveground containers must be kept properly painted.

(2) Vaporizers for internal combustion engines must meet the requirements of WAC 296-307-42515.

(3) Gas regulating and mixing equipment for internal combustion engines must meet the requirements of WAC 296-307-42517.

(4) Where vaporized gas on the low-pressure side of the system may condense to a liquid at normal operating temperatures and pressures, means must be provided to revaporize condensate.

(5) You must protect LP-gas systems against damage from vehicular traffic.

(6) Avoid the use of pits when possible, except pits fitted with automatic flammable vapor detecting devices. No drains or blowoff lines must be directed into or in proximity to sewer systems used for other purposes.

[Statutory Authority: RCW 49.17.040. 98-24-096, § 296-307-42023, filed 12/1/98, effective 3/1/99. 97-09-013, recodified as § 296-307-42023, filed 4/7/97, effective 4/7/97. Statutory Authority: RCW 49.17.040, [49.17.]050 and [49.17.]060. 96-22-048, § 296-306A-42023, filed 10/31/96, effective 12/1/96.]

WAC 296-307-425 LP-gas as a motor fuel.

[97-09-013, recodified as § 296-307-425, filed 4/7/97, effective 4/7/97. Statutory Authority: RCW 49.17.040, [49.17.]050 and [49.17.]060. 96-22-048, § 296-306A-425, filed 10/31/96, effective 12/1/96.]

WAC 296-307-42501 What does this section cover? (1) WAC 296-307-425 applies to internal combustion engines, fuel containers, and pertinent equipment for the use of LP-gases as a motor fuel on easily movable, readily portable units including self-propelled vehicles. This section does not apply to containers for transportation of LP-gases nor to marine fuel use.

(2) All uses of LP-gas as a motor fuel must meet all requirements of WAC 296-307-410 (unless otherwise indicated) and the additional requirements of this section.

[Statutory Authority: RCW 49.17.040. 98-24-096, § 296-307-42501, filed 12/1/98, effective 3/1/99. 97-09-013, recodified as § 296-307-42501, filed 4/7/97, effective 4/7/97. Statutory Authority: RCW 49.17.040, [49.17.]050 and [49.17.]060. 96-22-048, § 296-306A-42501, filed 10/31/96, effective 12/1/96.]

WAC 296-307-42503 What general requirements apply to LP-gas used as a motor fuel? (1) Fuel may be used from the cargo tank of a truck while in transit, but not from cargo tanks on trailers or semitrailers. Fuel may be used from the cargo tanks to operate stationary engines if the wheels are securely blocked.

(2) Passenger-carrying vehicles must not be fueled while passengers are on board.

(3) Industrial trucks (including lift trucks) equipped with permanently mounted fuel containers must be charged outdoors. Charging equipment must meet the requirements of WAC 296-307-440.

(4) LP-gas fueled industrial trucks must comply with the Standard for Type Designations, Areas of Use, Maintenance and Operation of Powered Industrial Trucks, NFPA 505-1969.

(5) Engines on vehicles must be shut down while fueling if the fueling operation involves venting to the atmosphere.

[Statutory Authority: RCW 49.17.040. 98-24-096, § 296-307-42503, filed 12/1/98, effective 3/1/99. 97-09-013, recodified as § 296-307-42503, filed 4/7/97, effective 4/7/97. Statutory Authority: RCW 49.17.040, [49.17.]050 and [49.17.]060. 96-22-048, § 296-306A-42503, filed 10/31/96, effective 12/1/96.]

WAC 296-307-42505 How must fuel containers be designed and classified? (1) Containers must meet the following requirements:

Minimum design pressure of container lb. per sp. in. gauge

Container type	For gases with vapor press. Not to exceed lb. per sp. in. gauge at 100°F (37.8°C.)	1949 and earlier editions of ASME Code (Par. U-68, U-69)	1949 edition of ASME Code (Par. U-200, U-201); editions 1950, 1952, 1956, 1959, 1962, 1965, and 1968 (Division I) editions of ASME Code; All editions of API-ASME Code[2]
200[1]	215	200	250

[1]Container type may be increased by increments of 25. The minimum design pressure of containers shall be 100% of the container type designation when constructed under 1949 or earlier editions of the ASME Code (Par. U-68 and U-69). The minimum design pressure of containers shall be 125% of the container type designation when constructed under:

1. The 1949 ASME Code (Par. U-200 and U-201);
2. 1950, 1952, 1956, 1959, 1962, 1965, and 1968 (Division I) editions of the ASME Code; and
3. All editions of the API-ASME Code.

[2]Construction of containers under the API-ASME Code is prohibited after July 1, 1961.

Exception: Fuel containers for use in industrial trucks (including lift trucks) shall be either DOT containers authorized for LP-gas service having a minimum service pressure of 240 psig or minimum Container Type 250. Under 1950 and later ASME Codes, this means a 312.5-psig design pressure container.

(2) DOT containers used as fuel containers must meet all requirements of this section.

(3) All container inlets and outlets except safety-relief valves and gauging devices must be labeled to designate whether they communicate with vapor or liquid space. (Labels may be on valves.)

[97-09-013, recodified as § 296-307-42505, filed 4/7/97, effective 4/7/97. Statutory Authority: RCW 49.17.040, [49.17.]050 and [49.17.]060. 96-22-048, § 296-306A-42505, filed 10/31/96, effective 12/1/96.]

WAC 296-307-42507 How must fuel containers be installed? (1) Containers must be located to minimize the possibility of damage to the container. Containers located in the rear of trucks and buses, when protected by substantial bumpers meet this requirement. Fuel containers on passenger-carrying vehicles must be installed as far from the engine as is practical, and the passenger space and any space containing radio equipment must be sealed from the container space to prevent direct seepage of gas to these spaces. The container compartment must be vented to the outside. In case the fuel container is mounted near the engine or the exhaust system, the container must be shielded against direct heat radiation.

(2) Containers must be installed with as much clearance as practical and at least the minimum road clearance of the vehicle under maximum spring deflection. This minimum clearance must be to the bottom of the container or to the lowest fitting on the container or housing, whichever is lower.

(3) Permanent and removable fuel containers must be securely mounted to prevent jarring loose, slipping, or rotating, and the fastenings must be designed and constructed to withstand static loading in any direction equal to twice the weight of the tank and attachments when filled with fuel using a safety factor of at least four based on the ultimate strength of the material to be used. Field welding, when necessary, must be made only on saddle plates, lugs or brackets, attached to the container by the manufacturer.

(4) Fuel containers on buses must be permanently installed.

(5) Containers from which only vapor is to be withdrawn must be installed and equipped with suitable connections to minimize the accidental withdrawal of liquid.

[97-09-013, recodified as § 296-307-42507, filed 4/7/97, effective 4/7/97. Statutory Authority: RCW 49.17.040, [49.17.]050 and [49.17.]060. 96-22-048, § 296-306A-42507, filed 10/31/96, effective 12/1/96.]

WAC 296-307-42509 What requirements apply to valves and accessories? (1) Container valves and accessories must have a rated working pressure of at least 250 psig, and must be suitable for LP-gas service.

(2) The filling connection must be fitted with an approved double back-pressure check valve, or a positive shutoff in conjunction with an internal back-pressure check valve. On a removable container the filler valve may be a hand operated shut-off valve with an internal excess flow valve. Main shut-off valves on the container on liquid and vapor must be readily accessible.

(3) Filling connections equipped with approved automatic back-pressure check valves, and safety-relief valves, all connections to the containers having openings for the flow of gas in excess of a No. 54 drill size must have approved automatic excess flow valves to prevent discharge of content in case connections are broken.

(4) Liquid-level gauging devices must meet the following requirements:

(a) Variable liquid-level gauges that require the venting of fuel to the atmosphere are prohibited on fuel containers of industrial trucks (including lift trucks).

(b) On portable containers that may be filled in the vertical and/or horizontal position, the fixed liquid-level gauge must indicate maximum permitted filling level for both vertical and horizontal filling with the container oriented to place the safety-relief valve in communication with the vapor space.

(c) For containers used solely in farm tractor service and charged at a point at least 50 feet from any important building, the fixed liquid-level gauging device may be constructed so that the outward flow of container content exceeds that passed by a No. 54 drill size opening, but must never exceed that passed by a No. 31 drill-size opening. An excess flow valve is not required. Fittings equipped with restricted drill size opening and the container on which they are used must be marked to indicate the size of the opening.

(d) All valves and connections on containers must be adequately protected to prevent damage due to accidental contact with stationary objects or from loose objects thrown up from the road. All valves must be safeguarded against damage due to collision, overturning or other accident. Farm tractors where parts of the vehicle provide protection to valves and fittings meet this requirement. However, on removable type containers the protection for the fittings must be permanently attached to the container.

(e) You should normally exchange removable fuel outdoors. When removable fuel containers are used, means shall be provided in the fuel system to minimize the escape of fuel when the containers are exchanged. You must use one of the following methods:

(i) Using an approved automatic quick-closing coupling (a type closing in both directions when uncoupled) in the fuel line; or

(ii) Closing the valve at the fuel container and allowing the engine to run until the fuel in the line is consumed.

[97-09-013, recodified as § 296-307-42509, filed 4/7/97, effective 4/7/97. Statutory Authority: RCW 49.17.040, [49.17.]050 and [49.17.]060. 96-22-048, § 296-306A-42509, filed 10/31/96, effective 12/1/96.]

WAC 296-307-42511 What requirements apply to piping, tubing, and fittings? (1) Pipe from fuel container to first-stage regulator must be at least schedule 80 wrought iron or steel (black or galvanized), brass or copper; or seamless copper, brass, or steel tubing. Steel tubing must have a minimum wall thickness of 0.049 inch. Steel pipe or tubing must be adequately protected against exterior corrosion. Copper tubing must be types K or L or equivalent with a minimum wall thickness of 0.032 inch. Approved flexible connections may be used between container and regulator or between regulator and gas-air mixer. Using aluminum pipe or tubing is prohibited. For removable containers, an approved flexible connection must be used between the container and the fuel line.

(2) All piping must be installed, braced, and supported to minimize vibration strains or wear.

[97-09-013, recodified as § 296-307-42511, filed 4/7/97, effective 4/7/97. Statutory Authority: RCW 49.17.040, [49.17.]050 and [49.17.]060. 96-22-048, § 296-306A-42511, filed 10/31/96, effective 12/1/96.]

WAC 296-307-42513 What requirements apply to safety devices? (1) Spring-loaded internal safety-relief valves must be used on all motor fuel containers.

(2) The discharge outlet from safety-relief valves must be located on the outside of enclosed spaces and as far as practical from possible sources of ignition, and vented upward within 45 degrees of the vertical to prevent impingement of escaping gas upon containers, or parts of vehicles, or on vehicles in adjacent lines of traffic. A rain cap or other protector must be used to keep water and dirt from collecting in the valve.

(3) When a discharge line from the container safety-relief valve is used, the line shall be metallic, other than aluminum, and must be sized, located, and maintained so as not to restrict the required flow of gas from the safety-relief valve. The discharge line must be able to withstand the pressure resulting from the discharge of vapor when the safety-relief valve is in the full open position. Flexible metal hose or tubing must be used when necessary.

(4) Portable containers equipped for volumetric filling may be filled in either the vertical or horizontal position only when oriented to place the safety-relief valve in communication with the vapor space.

[97-09-013, recodified as § 296-307-42513, filed 4/7/97, effective 4/7/97. Statutory Authority: RCW 49.17.040, [49.17.]050 and [49.17.]060. 96-22-048, § 296-306A-42513, filed 10/31/96, effective 12/1/96.]

WAC 296-307-42515 What requirements apply to vaporizers? (1) Vaporizers, their parts, and other devices that may be subjected to container pressure must have a design pressure of at least 250 psig.

(2) Each vaporizer must have a valve or suitable plug that will permit substantially complete draining of the vaporizer. It must be located at or near the lowest portion of the section occupied by the water or other heating medium.

(3) Vaporizers must be securely fastened to minimize the possibility of loosening.

(4) Each vaporizer must be permanently marked at a visible point as follows:

(a) With the design pressure of the fuel-containing portion in psig.

(b) With the water capacity of the fuel-containing portion of the vaporizer in pounds.

(5) Devices to supply heat directly to a fuel container must have an automatic device to cut off the supply of heat before the pressure inside the fuel container reaches 80% of the start-to-discharge pressure setting of the safety-relief device on the fuel container.

(6) Engine exhaust gases may be used as a direct source of heat supply for the vaporization of fuel if the materials of construction of those parts of the vaporizer in contact with exhaust gases are resistant to the corrosive action of exhaust gases and the vaporizer system is designed to prevent excessive pressures.

(7) Fusible plugs are prohibited on vaporizers.

[97-09-013, recodified as § 296-307-42515, filed 4/7/97, effective 4/7/97. Statutory Authority: RCW 49.17.040, [49.17.]050 and [49.17.]060. 96-22-048, § 296-306A-42515, filed 10/31/96, effective 12/1/96.]

WAC 296-307-42517 What requirements apply to gas regulating and mixing equipment? (1) Approved automatic pressure reducing equipment must be installed securely between the fuel supply container and gas-air mixer to reduce the pressure of the fuel delivered to the gas-air mixer.

(2) An approved automatic shut-off valve must be provided in the fuel system at some point ahead of the inlet of the gas-air mixer, designed to prevent flow of fuel to the mixer when the ignition is off and the engine is not running. For industrial trucks and engines operating in buildings other than those used exclusively to house engines, the automatic shut-off valve must be designed to operate if the engine stops. Atmospheric regulators (zero governors) are adequate as an automatic shut-off valve only in cases of outdoor operation such as farm tractors, construction equipment, irrigation pump engines, and other outdoor stationary engine installations.

(3) The source of air for combustion must be completely isolated from the passenger compartment, ventilating system, or air-conditioning system.

[97-09-013, recodified as § 296-307-42517, filed 4/7/97, effective 4/7/97. Statutory Authority: RCW 49.17.040, [49.17.]050 and [49.17.]060. 96-22-048, § 296-306A-42517, filed 10/31/96, effective 12/1/96.]

WAC 296-307-42519 What is the maximum container capacity allowed? A single fuel container used on passenger carrying vehicles must have a maximum of 200 gallons water capacity. A single fuel container on other vehicles normally operating on the highway must have a maximum of 300 gallons water capacity except as provided in WAC 296-307-42503(1).

[Statutory Authority: RCW 49.17.040. 98-24-096, § 296-307-42519, filed 12/1/98, effective 3/1/99. 97-09-013, recodified as § 296-307-42519, filed 4/7/97, effective 4/7/97. Statutory Authority: RCW 49.17.040, [49.17.]050 and [49.17.]060. 96-22-048, § 296-306A-42519, filed 10/31/96, effective 12/1/96.]

WAC 296-307-42521 What requirements apply to stationary engines used indoors? Stationary engines and gas turbines installed in buildings, including portable engines used instead of or to supplement stationary engines, must comply with the Standard for the Institution and Use of Stationary Combustion Engines and Gas Turbines, NFPA 37-1970, and the appropriate requirements of WAC 296-307-410 through 296-307-420.

[Statutory Authority: RCW 49.17.040. 98-24-096, § 296-307-42521, filed 12/1/98, effective 3/1/99. 97-09-013, recodified as § 296-307-42521, filed 4/7/97, effective 4/7/97. Statutory Authority: RCW 49.17.040, [49.17.]050 and [49.17.]060. 96-22-048, § 296-306A-42521, filed 10/31/96, effective 12/1/96.]

WAC 296-307-42523 What requirements apply to portable engines used indoors? (1) Portable engines may be used in buildings only for emergency use, and according to WAC 296-307-42521.

(2) Exhaust gases must be discharged outside the building or to an area where they will not constitute a hazard.

(3) Provision must be made to supply sufficient air for combustion and cooling.

(4) An approved automatic shut-off valve must be provided in the fuel system ahead of the engine, designed to prevent flow of fuel to the engine when the ignition is off or if the engine should stop.

[Statutory Authority: RCW 49.17.040. 98-24-096, § 296-307-42523, filed 12/1/98, effective 3/1/99. 97-09-013, recodified as § 296-307-42523, filed 4/7/97, effective 4/7/97. Statutory Authority: RCW 49.17.040, [49.17.]050 and [49.17.]060. 96-22-048, § 296-306A-42523, filed 10/31/96, effective 12/1/96.]

WAC 296-307-42525 What requirements apply to industrial trucks used indoors? (1) LP-gas-fueled industrial trucks may be used in buildings and structures.

(2) No more than two LP-gas containers must be used on an industrial truck for motor fuel purposes.

(3) LP-gas-fueled industrial trucks may be used in buildings frequented by the public, when occupied by the public. The total water capacity of containers on each industrial truck must be a maximum of 105 pounds (nominal 45 pounds LP-gas).

(4) Trucks must be attended at all times in areas occupied by the public.

(5) Industrial trucks must not be parked and left unattended in areas of possible excessive heat or sources of ignition.

[97-09-013, recodified as § 296-307-42525, filed 4/7/97, effective 4/7/97. Statutory Authority: RCW 49.17.040, [49.17.]050 and [49.17.]060. 96-22-048, § 296-306A-42525, filed 10/31/96, effective 12/1/96.]

WAC 296-307-42527 How must LP-gas-fueled vehicles be garaged? (1) LP-gas-fueled vehicles may be stored or serviced inside garages if there are no leaks in the fuel system and the fuel tanks are not filled beyond the maximum filling capacity allowed.

(2) LP-gas-fueled vehicles being repaired in garages must have the container shut-off valve closed except when fuel is required for engine operation.

(3) Such vehicles must not be parked near sources of heat, open flames, or similar sources of ignition or near open pits unless such pits are adequately ventilated.

[97-09-013, recodified as § 296-307-42527, filed 4/7/97, effective 4/7/97. Statutory Authority: RCW 49.17.040, [49.17.]050 and [49.17.]060. 96-22-048, § 296-306A-42527, filed 10/31/96, effective 12/1/96.]

WAC 296-307-430 Storage of containers awaiting use or resale.

[97-09-013, recodified as § 296-307-430, filed 4/7/97, effective 4/7/97. Statutory Authority: RCW 49.17.040, [49.17.]050 and [49.17.]060. 96-22-048, § 296-306A-430, filed 10/31/96, effective 12/1/96.]

WAC 296-307-43001 What does this section cover? WAC 296-307-430 applies to the storage of portable containers a maximum of 1,000 pounds water capacity, filled or partially filled, at user location but not connected for use, or in storage for resale by dealers or resellers. This section does not apply to containers stored at charging plants or at plants devoted primarily to the storage and distribution of LP-gas or other petroleum products.

[Statutory Authority: RCW 49.17.040. 98-24-096, § 296-307-43001, filed 12/1/98, effective 3/1/99. 97-09-013, recodified as § 296-307-43001, filed 4/7/97, effective 4/7/97. Statutory Authority: RCW 49.17.040, [49.17.]050 and [49.17.]060. 96-22-048, § 296-306A-43001, filed 10/31/96, effective 12/1/96.]

WAC 296-307-43003 What general requirements apply to storage of containers? (1) Containers in storage must be located to minimize exposure to excessive temperature rise, physical damage, or tampering.

(2) Containers stored inside must be located away from exits, stairways, or in areas normally used or intended for the safe exit of people.

(3) Container valves must be protected while in storage as follows:

(a) By setting into recess of container to prevent the possibility of their being struck if the container is dropped upon a flat surface; or

(b) By ventilated cap or collar, fastened to container capable of withstanding blow from any direction equivalent to that of a thirty-pound weight dropped four feet. Construction must be such that a blow will not be transmitted to a valve or other connection.

(4) The outlet valves of containers in storage must be closed.

(5) Empty containers that have been in LP-gas service should preferably be stored in the open. When stored inside, they must be considered full containers for the purpose of determining the maximum quantity of LP-gas permitted by this section.

[97-09-013, recodified as § 296-307-43003, filed 4/7/97, effective 4/7/97. Statutory Authority: RCW 49.17.040, [49.17.]050 and [49.17.]060. 96-22-048, § 296-306A-43003, filed 10/31/96, effective 12/1/96.]

WAC 296-307-43005 How must containers be stored within buildings frequented by the public? DOT containers with a maximum individual water capacity of 2-1/2 pounds, used with completely self-contained hand torches and similar applications, may be stored or displayed in a building frequented by the public. The display of such containers must be limited to a total of 24 units of each brand and size. The total quantity on display and in storage must not exceed 200 pounds LP-gas.

[97-09-013, recodified as § 296-307-43005, filed 4/7/97, effective 4/7/97. Statutory Authority: RCW 49.17.040, [49.17.]050 and [49.17.]060. 96-22-048, § 296-306A-43005, filed 10/31/96, effective 12/1/96.]

WAC 296-307-43007 How must containers be stored in buildings not frequented by the public? (1) The quantity of LP-gas stored must be a maximum of 300 pounds (approximately 2,550 cubic feet in vapor form), except when stored within special buildings or rooms.

(2) Containers carried as a part of service equipment on highway mobile vehicles are not considered in the total storage capacity if the vehicles are stored in private garages, and are limited to one container per vehicle with a maximum LP-gas capacity of 100 pounds. All container valves must be closed.

[97-09-013, recodified as § 296-307-43007, filed 4/7/97, effective 4/7/97. Statutory Authority: RCW 49.17.040, [49.17.]050 and [49.17.]060. 96-22-048, § 296-306A-43007, filed 10/31/96, effective 12/1/96.]

WAC 296-307-43009 How must containers be stored within special buildings or rooms? (1) The quantity of LP-gas stored in special buildings or rooms must be a maximum of 10,000 pounds.

(2) The walls, floors, and ceilings of container storage rooms that are within or adjacent to other parts of the building must be constructed of material having at least a two-hour fire resistance rating.

(3) At least 10% of the exterior walls or roof must be of explosion relieving construction.

(4) Each opening from storage rooms to other parts of the building must be protected by a listed one and one-half hour "(B)" fire door.

(5) Such rooms must have no open flames for heating or lighting.

(6) Such rooms must be adequately ventilated both top and bottom to the outside only. The openings from such vents must be at least five feet away from any other opening into any building.

(7) The floors of such rooms must not be below ground level. Any space below the floor must be of solid fill or properly ventilated to the open air.

(8) Such storage rooms must not be located adjoining the line of property occupied by schools, churches, hospitals, athletic fields or other points of public gathering.

[97-09-013, recodified as § 296-307-43009, filed 4/7/97, effective 4/7/97. Statutory Authority: RCW 49.17.040, [49.17.]050 and [49.17.]060. 96-22-048, § 296-306A-43009, filed 10/31/96, effective 12/1/96.]

WAC 296-307-43011 How must containers be stored outdoors? (1) Storage outside of buildings, for containers awaiting use or resale, must be located according to the table below with respect to:

(a) The nearest important building or group of buildings;

(b) The line of adjoining property that may be built on;

(c) Busy thoroughfares;

(d) The line of adjoining property occupied by schools, churches, hospitals, athletic fields, or other points of public gathering.

Quantity of LP-Gas Stored	Distance
500 pounds or less	0
501 to 2,500 pounds	0*
2,501 to 6,000 pounds	10 feet
6,001 to 10,000 pounds	20 feet
Over 10,000 pounds	25 feet

*Containers must be at least ten feet from any building on adjoining property, any sidewalk, or any of the exposures described in (c) or (d) of this subsection.

(2) Containers must be in a suitable enclosure or otherwise protected against tampering.

[97-09-013, recodified as § 296-307-43011, filed 4/7/97, effective 4/7/97. Statutory Authority: RCW 49.17.040, [49.17.]050 and [49.17.]060. 96-22-048, § 296-306A-43011, filed 10/31/96, effective 12/1/96.]

WAC 296-307-43013 What fire protection must be provided for stored containers? Storage locations other than supply depots separated and located apart from dealer, reseller, or user establishments must have at least one approved portable fire extinguisher having a minimum rating of 8-B, C.

[97-09-013, recodified as § 296-307-43013, filed 4/7/97, effective 4/7/97. Statutory Authority: RCW 49.17.040, [49.17.]050 and [49.17.]060. 96-22-048, § 296-306A-43013, filed 10/31/96, effective 12/1/96.]

WAC 296-307-435 LP-gas system installations on commercial vehicles.

[97-09-013, recodified as § 296-307-435, filed 4/7/97, effective 4/7/97. Statutory Authority: RCW 49.17.040, [49.17.]050 and [49.17.]060. 96-22-048, § 296-306A-435, filed 10/31/96, effective 12/1/96.]

WAC 296-307-43501 What does this section cover? (1) WAC 296-307-435 applies to:

(a) LP-gas system installations on vehicles (self-propelled, trailers, or semitrailers) used for commercial or construction purposes;

(b) All exchangeable container systems with container capacities greater than 105 pounds water capacity (approximately 45 pounds LP-gas capacity); and

(c) Systems using containers permanently mounted on vehicles.

(2) All LP-gas installations on commercial vehicles must meet all requirements of WAC 296-307-410 (unless otherwise indicated) and the additional requirements of this section. When such a vehicle is permanently parked, and LP-gas is supplied from a system not mounted on and secured to the unit, WAC 296-307-415 and 296-307-420 also apply.

(3) This section does not apply to LP-gas motor fuel systems covered by WAC 296-307-425.

[Statutory Authority: RCW 49.17.040. 98-24-096, § 296-307-43501, filed 12/1/98, effective 3/1/99. 97-09-013, recodified as § 296-307-43501, filed 4/7/97, effective 4/7/97. Statutory Authority: RCW 49.17.040, [49.17.]050 and [49.17.]060. 96-22-048, § 296-306A-43501, filed 10/31/96, effective 12/1/96.]

WAC 296-307-43503 How must containers be constructed? Containers must be constructed according to WAC 296-307-41011, and marked according to the applicable requirements of WAC 296-307-41015, and must also meet the following:

(1) Containers designed for use as portable cylinders must be constructed according to DOT specifications.

(2) All other containers whether designed for permanent mounting, or for portable or semiportable use (such as skid tanks), must be constructed as provided for by WAC 296-307-41009(4) and 296-307-41011(1).

(3) Nonrecessed container fittings and accessories must be protected against damage by either:

(a) Their location;

(b) The vehicle frame or bumper; or

(c) Protective housing. The housing must meet the requirements under which the tanks are fabricated with respect to design and construction and must be designed to withstand static loading in any direction equal to twice the weight of the tank and attachments when filled with the lading at a safety factor of at least four, based on the ultimate strength of the material used. The housing must have a weather cover if necessary to ensure proper operation of valves and safety devices.

(4) Manually operated shut-off valves or self-closing internal valves must be closed except during transfer operations.

(5) Permanently installed containers must meet the following requirements:

(a) Tank motor vehicles with frames not made integral with the tank, as by welding, must have turnbuckles or similar positive devices for drawing the tank down tight on the frame. In addition, suitable stops or anchors must be attached to the frame and/or the tank to prevent relative motion between them from starting, stopping, and turning. The stops and anchors must be installed to be accessible for inspection and maintenance.

(b) Any tank motor vehicle designed and constructed so that the cargo tank constitutes the stress member used instead of a frame must be supported by external cradles enclosing at least 120 degrees of the shell circumference. The design calculations must include beam stress, shear stress, torsion stress, bending moment, and acceleration stress for the cargo tank as a whole using a factor of safety of four, based on the ultimate tensile strength of the material. Maximum concentrated stresses that might be created at pads and cradles due to shear, bending, and torsion shall also be calculated according to Appendix G of the American Society of Mechanical Engineers, Unfired Pressure Vessel Code, 1968. Fully loaded vehicles must be assumed to be operating under highway conditions equal to two "g" loading. The effects of fatigue shall be taken into consideration. Cargo tanks mounted on frames may be supported by upright supports attached to pads if these factors are taken into account.

(c) Where any tank support is attached to any part of a tank head, the stresses imposed upon the head must be provided for as required above.

(d) Tank supports, stops, anchors, and bumpers must not be welded directly to the tank but must be attached by means of pads of the same material as the tank. The pad thickness must be at least 1/4 inch, or the thickness of the shell material if less, and no greater than the shell material. Each pad must extend at least four times its thickness, in each direction, beyond the weld attaching the support, bumper, stop, or anchor. Each pad must be preformed to an inside radius no greater than the outside radius of the tank at the place of attachment. Each pad corner must be rounded to a radius at least one-fourth the width of the pad, and no greater than one-half the width of the pad. Weepholes and tell-tale holes, if used, must be drilled or punched before the pads are attached to the tank. Each pad must be attached to the tank by continuous fillet welding using filler material having properties that meet the recommendations of the maker of the shell and head material.

(6) Portable or semiportable containers must meet the applicable requirements of WAC 296-307-42507(3). Containers designed for permanent installation as part of systems under WAC 296-307-420 are prohibited.

(a) Filling connections must have an approved automatic back pressure check valve, excess flow check valve, or quick closing internal valve to prevent excessive escape of gas in case the filling connection is broken.

Exception: Where the filling and discharge connect on a common opening in the container shell, and the opening is fitted with a quick-closing internal valve, the automatic valve is not required.

Every inlet and outlet connection must have a manually or automatically operated shut-off valve. Liquid discharge openings, except those for engine fuel lines, on tanks built after September 1, 1965, must be fitted with a remotely controlled internal shut-off valve. Valves must meet the following requirements:

(i) The seat of the valve must be inside the tank, or in the opening nozzle or flange, or in a companion flange bolted to the nozzle or flange.

(ii) All parts of the valve inside the tank, nozzle, or companion flange must be made of material that protects against corrosion or other deterioration in the presence of the lading.

(iii) The parts must be arranged so that damage to parts exterior to the tank will not prevent effective seating of the valve.

(iv) The valve may be operated mechanically, by hydraulically, or by air, or gas pressure.

(v) The valve must have remote means of automatic closure, both mechanical and thermal, in at least two places for tanks over 3,500 gallons water capacity. These remote control stations must be located at each end of the tank and diagonally opposite. The thermal control mechanism must have a fusible element with a melting point between 220°F and 208°F. At least one remote control station must be provided for tanks of 3,500 gallons water capacity or less, and such actuating means may be mechanical.

(b) All other connections to containers, except those used for gauging devices, thermometer wells, safety-relief devices, and plugged openings, must have suitable automatic excess flow valves, or may instead be fitted with quick-closing internal valves.

The control mechanism for the internal valve must have a secondary control, remote from the fill or discharge connections (for use in the event of accidents or fire during delivery operations), and such control mechanism must have a fusible element with a melting point not over 220°F or less than 208°F.

(c) Excess flow valves must close automatically at the rated flow of vapor or liquid as specified by the valve manufacturers. The flow rating of the piping beyond the excess flow valve must be greater than that of the excess flow valve and such rating must include valves, fittings, and hose.

Exception: When branching or necessary restrictions are incorporated in a piping system so that flow ratings are less than that of the excess flow valve and the tank, then additional excess flow valves must be installed in the piping where such flow rate is reduced.

(d) Container inlets and outlets, except those used for safety-relief valves, liquid-level gauging devices, and pressure gauges, must be labeled to designate whether they communicate with vapor or liquid space when the container is filled to maximum permitted filling density. Labels may be on the valves.

[Statutory Authority: RCW 49.17.040. 98-24-096, § 296-307-43503, filed 12/1/98, effective 3/1/99. 97-09-013, recodified as § 296-307-43503, filed 4/7/97, effective 4/7/97. Statutory Authority: RCW 49.17.040, [49.17.]050 and [49.17.]060. 96-22-048, § 296-306A-43503, filed 10/31/96, effective 12/1/96.]

WAC 296-307-43505 What is the maximum capacity allowed for LP-gas installations on commercial vehicles? A single fuel container used on passenger carrying vehicles must not exceed 200 gallons water capacity.

[97-09-013, recodified as § 296-307-43505, filed 4/7/97, effective 4/7/97. Statutory Authority: RCW 49.17.040, [49.17.]050 and [49.17.]060. 96-22-048, § 296-306A-43505, filed 10/31/96, effective 12/1/96.]

WAC 296-307-43507 Where must systems be located? (1) Containers must not be installed, transported, or stored (even temporarily) inside any vehicle covered by these standards except as provided by the DOT regulations.

(2) Containers, control valves, and regulating equipment comprising a complete system must be suitably protected against damage and weather. Systems may be installed in a recess vaportight to the inside of the vehicle and accessible from and vented to the outside.

(3) Systems installed outside of mobile units must be located so that discharge from safety-relief devices must be at least 3 feet horizontally away from any opening into the unit below the level of such discharge. When the system is located in a recess vaportight to the inside, vent openings in the recess must be at least 3 feet horizontally away from any opening into the mobile unit below the level of these vents.

(4) There must be no fuel connection between tractor and trailer or other vehicle units.

(5) The container or container carrier must be secured in place by fastenings designed and constructed with a minimum safety factor of four to withstand loading in any direction equal to twice the weight of the container when filled to normal capacity with LP-gas.

[97-09-013, recodified as § 296-307-43507, filed 4/7/97, effective 4/7/97. Statutory Authority: RCW 49.17.040, [49.17.]050 and [49.17.]060. 96-22-048, § 296-306A-43507, filed 10/31/96, effective 12/1/96.]

WAC 296-307-43509 What requirements apply to valves and accessories? Container valves and accessories must be provided, protected and mounted as follows:

(1) Systems using DOT cylinders according to WAC 296-307-41511.

(2) All other systems according to WAC 296-307-42005 (2) through (8).

(3) Portable, semiportable and permanently mounted containers shall be mounted and protected as provided under WAC 296-307-43503 (2), (5), and (6).

[Statutory Authority: RCW 49.17.040. 98-24-096, § 296-307-43509, filed 12/1/98, effective 3/1/99. 97-09-013, recodified as § 296-307-43509, filed 4/7/97, effective 4/7/97. Statutory Authority: RCW 49.17.040, [49.17.]050 and [49.17.]060. 96-22-048, § 296-306A-43509, filed 10/31/96, effective 12/1/96.]

WAC 296-307-43511 What requirements apply to safety devices? (1) DOT containers must have safety-relief devices as required by DOT regulations.

(2) A final stage regulator of an LP-gas system (excluding any appliance regulator) must have, on the low-pressure side, a relief valve that is set to start to discharge within the limits specified in Table U-7.

(3) The relief valve and space above the regulator and relief valve diaphragms must be vented to the outside air and terminate at a position to minimize the possibility of vapors accumulating at sources of ignition.

(4) Whenever equipment such as a cargo heater or cooler on commercial vehicles is designed to be in operation while in transit, suitable means to stop the flow such as an excess flow valve or other device, must be installed. This device will be actuated to stop the flow in the event of the break in the fuel supply line. All excess flow valves must comply with WAC 296-307-41019(3).

[Statutory Authority: RCW 49.17.040. 98-24-096, § 296-307-43511, filed 12/1/98, effective 3/1/99. 97-09-013 recodified as § 296-307-43511, filed 4/7/97, effective 4/7/97. Statutory Authority: RCW 49.17.040, [49.17.]050 and [49.17.]060. 96-22-048, § 296-306A-43511, filed 10/31/96, effective 12/1/96.]

WAC 296-307-43513 What types of systems may be used on commercial vehicles? Commercial vehicles must use either vapor withdrawal or liquid withdrawal systems.

[97-09-013, recodified as § 296-307-43513, filed 4/7/97, effective 4/7/97. Statutory Authority: RCW 49.17.040, [49.17.]050 and [49.17.]060. 96-22-048, § 296-306A-43513, filed 10/31/96, effective 12/1/96.]

WAC 296-307-43515 What requirements apply to enclosures and mounting? (1) Housing or enclosures must be designed to provide proper ventilation.

(2) Hoods, domes, or removable portions of cabinets must have means to keep them firmly in place during transit.

(3) The assembly must hold the containers firmly in position and prevent their movement during transit according to WAC 296-307-42507(3).

(4) Containers must be mounted on a substantial support or base secured firmly to the vehicle chassis. Neither the container nor its support must extend below the frame.

[Statutory Authority: RCW 49.17.040. 98-24-096, § 296-307-43515, filed 12/1/98, effective 3/1/99. 97-09-013, recodified as § 296-307-43515, filed 4/7/97, effective 4/7/97. Statutory Authority: RCW 49.17.040, [49.17.]050 and [49.17.]060. 96-22-048, § 296-306A-43515, filed 10/31/96, effective 12/1/96.]

WAC 296-307-43517 What requirements apply to piping, tubing, and fittings? (1) Regulators must be connected directly to the container valve outlet or mounted securely by means of support bracket and connected to the container valve or valves with a listed high pressure flexible connector.

(2) Provision must be made between the regulator outlet and the gas service lines by either a flexible connector or a tubing loop to provide for expansion, contraction, jarring, and vibration.

(3) Aluminum alloy piping is prohibited. Steel tubing must have a minimum wall thickness of 0.049 inch. Steel piping or tubing must be adequately protected against exterior corrosion.

(4) Approved gas tubing fittings must be used for tubing connections.

(5) The fuel line must be firmly fastened in a protected location and where under the vehicle and outside and below any insulation or false bottom, fastenings must prevent abrasion or damage to the gas line due to vibration. Where the fuel line passes through structural members or floors, a rubber grommet or equivalent must be installed to prevent chafing.

(6) The fuel line must be installed to enter the vehicle through the floor directly beneath or adjacent to the appliance that it serves. When a branch line is required, the tee connection must be in the main fuel line and located under the floor and outside the vehicle.

(7) All parts of the system assembly must be designed and secured to preclude such parts working loose during transit.

[97-09-013, recodified as § 296-307-43517, filed 4/7/97, effective 4/7/97. Statutory Authority: RCW 49.17.040, [49.17.]050 and [49.17.]060. 96-22-048, § 296-306A-43517, filed 10/31/96, effective 12/1/96.]

WAC 296-307-43519 What requirements apply to appliances? (1) LP-gas appliances must be approved for use on commercial vehicles.

(2) In vehicles not intended for human occupancy, where the gas-fired heating appliance is used to protect the cargo, such heater may be unvented, but provision must be made to dispose of the products of combustion to the outside.

(3) In vehicles intended for human occupancy, all gas-fired heating appliances, including water heaters, must be designed or installed to provide for complete separation of the combustion system from the atmosphere of the living space. Such appliances must be installed with the combustion air inlet assembly furnished as a component of the appliance, and with either:

(a) The flue gas outlet assembly furnished as a component of the appliance; or

(b) A listed roof jack if the appliance is listed for such use.

The combustion air inlet assembly, flue gas outlet assembly, and roof jack must extend to the outside atmosphere.

(4) Provision must be made to ensure an adequate supply of outside air for combustion.

(5) All gas-fired heating appliances and water heaters must have an approved automatic device designed to shut off the flow of gas to the main burner and to the pilot in the event the pilot flame is extinguished.

(6) Gas-fired appliances installed in the cargo space must be readily accessible.

(7) Appliances must be constructed or protected to minimize the possible damage or impaired operation resulting from cargo shifting or handling.

(8) Appliances inside the vehicle must be located so that a fire at an appliance will not block the exit route.

[97-09-013, recodified as § 296-307-43519, filed 4/7/97, effective 4/7/97. Statutory Authority: RCW 49.17.040, [49.17.]050 and [49.17.]060. 96-22-048, § 296-306A-43519, filed 10/31/96, effective 12/1/96.]

WAC 296-307-43521 What general precautions must be followed for LP-gas system installations on commercial vehicles? (1) DOT containers must be marked, maintained, and requalified for use according to DOT regulations.

(2) Containers that have not been requalified according to DOT regulations must be removed from service. Requalified containers must be stamped with the date of requalification. When DOT cylinders are requalified by retesting, the retest must be made according to DOT regulations.

(3) Containers must not be charged with fuel unless they bear the proper markings of the code under which they were constructed, and with their water capacity. In the case of cylinders or portable containers filled by weight, the container must be marked with its tareweight.

(4) DOT containers that have been involved in a fire must not be recharged until they have been requalified for service according to DOT regulations.

(5) API-ASME containers or ASME containers that have been involved in a fire must not be recharged until they have been retested according to the requirements for their original hydrostatic test and found to be suitable for continued service.

"API-ASME (ASME) container" means a container constructed according to the Rules for Construction of Unfired Pressure Vessels, section VIII, Division 1, American Society of Mechanical Engineers (ASME) Boiler and Pressure Vessel Code, 1968 edition.

(6) Containers must not be charged without the consent of the owner.

(7) A permanent caution plate must be provided on the appliance or adjacent to the container outside of any enclosure. It must include the word "caution" and the following or similar instructions.

(a) Be sure all appliance valves are closed before opening container valve.

(b) Connections at appliances, regulators, and containers must be checked periodically for leaks with soapy water or its equivalent.

(c) A match or flame must not be used to check for leaks.

(d) Container valves must be closed except when the equipment is in use.

[97-09-013, recodified as § 296-307-43521, filed 4/7/97, effective 4/7/97. Statutory Authority: RCW 49.17.040, [49.17.]050 and [49.17.]060. 96-22-048, § 296-306A-43521, filed 10/31/96, effective 12/1/96.]

WAC 296-307-43523 How must containers be charged? Containers must be charged according to DOT specifications.

[97-09-013, recodified as § 296-307-43523, filed 4/7/97, effective 4/7/97. Statutory Authority: RCW 49.17.040, [49.17.]050 and [49.17.]060. 96-22-048, § 296-306A-43523, filed 10/31/96, effective 12/1/96.]

WAC 296-307-43525 What fire protection must be provided for mobile cook units? Mobile cook units must have at least one approved portable fire extinguisher having a minimum rating of 8-B, C.

[97-09-013, recodified as § 296-307-43525, filed 4/7/97, effective 4/7/97. Statutory Authority: RCW 49.17.040, [49.17.]050 and [49.17.]060. 96-22-048, § 296-306A-43525, filed 10/31/96, effective 12/1/96.]

WAC 296-307-440 LP-gas service stations.

[97-09-013, recodified as § 296-307-440, filed 4/7/97, effective 4/7/97. Statutory Authority: RCW 49.17.040, [49.17.]050 and [49.17.]060. 96-22-048, § 296-306A-440, filed 10/31/96, effective 12/1/96.]

WAC 296-307-44001 What does this section cover? WAC 296-307-440 applies to storage containers, dispensing devices, and pertinent equipment in service stations where LP-gas is stored and dispensed into fuel tanks of motor vehicles. LP-gas service stations must meet all requirements of WAC 296-307-410 and the requirements of this section.

[Statutory Authority: RCW 49.17.040. 98-24-096, § 296-307-44001, filed 12/1/98, effective 3/1/99. 97-09-013, recodified as § 296-307-44001, filed 4/7/97, effective 4/7/97. Statutory Authority: RCW 49.17.040, [49.17.]050 and [49.17.]060. 96-22-048, § 296-306A-44001, filed 10/31/96, effective 12/1/96.]

WAC 296-307-44003 How must storage containers be designed and classified? Storage containers must be designed and classified according to the following table:

		Minimum design pressure of container lb. per sp. in. gauge	
Container type	**For gases with vapor press. Not to exceed lb. per sp. in. gauge 100°F (37.8°C.)**	**1949 and earlier editions of ASME Code (Par. U-68, U-69)**	**1949 edition of ASME Code (Par.U-200, U-201); 1950, 1952, 1956, 1959, 1962, 1965, and 1968 (Division I) editions of ASME Code; All editions of API-ASME Code[2]**
200[1]	215	200	250

[1]Container type may be increased by increments of 25. The minimum design pressure of containers shall be 100% of the container type designation when constructed under 1949 or earlier editions of ASME Code (Par. U-68 and U-69). The minimum design pressure of containers shall be 125% of the container type designation when constructed under: 1. The 1949 ASME Code (Par. U-200 and U-201), 2. 1950, 1952, 1956, 1959, 1962, 1965, and 1968 (Division I) editions of the ASME Code, and 3. All editions of the API-ASME Code.

[2]Construction of containers under the API-ASME Code is not authorized after July 1, 1961.

[97-09-013, recodified as § 296-307-44003, filed 4/7/97, effective 4/7/97. Statutory Authority: RCW 49.17.040, [49.17.]050 and [49.17.]060. 96-22-048, § 296-306A-44003, filed 10/31/96, effective 12/1/96.]

WAC 296-307-44005 What requirements apply to valves and accessories? (1) A filling connection on the container must be fitted with one of the following:

(a) A combination back-pressure check and excess flow valve.

(b) One double or two single back-pressure valves.

(c) A positive shut-off valve, in conjunction with either:

(i) An internal back-pressure valve; or

(ii) An internal excess flow valve.

Instead of an excess flow valve, filling connections may be fitted with a quick-closing internal valve that only opens during operating periods. The mechanism for such valves may have a secondary control that will close automatically in case of fire. The melting point for a fusible plug must be a maximum of 220°F.

(2) A filling pipe inlet terminal off the container must have a positive shut-off valve and either:

(a) A back pressure check valve; or

(b) An excess flow check valve.

(3) All openings in the container must have approved excess flow check valves.

Exceptions: (a) Filling connections;
(b) Safety-relief connections;
(c) Liquid-level gauging devices; and
(d) Pressure gauge connections.

(4) All container inlets and outlets must be labeled to designate whether they connect with vapor or liquid (labels may be on valves).

Exceptions: (a) Safety-relief valves;
(b) Liquid-level gauging devices; and
(c) Pressure gauges.

(5) Each storage container must have a suitable pressure gauge.

[97-09-013, recodified as § 296-307-44005, filed 4/7/97, effective 4/7/97. Statutory Authority: RCW 49.17.040, [49.17.]050 and [49.17.]060. 96-22-048, § 296-306A-44005, filed 10/31/96, effective 12/1/96.]

WAC 296-307-44007 What requirements apply to safety devices? (1) All safety-relief devices must be installed as follows:

(a) On the container and directly connected with the vapor space.

(b) Safety-relief valves and discharge piping shall be protected against physical damage. The outlet must have loose-fitting rain caps. There shall be no return bends or restrictions in the discharge piping.

(c) The discharge from two or more safety-relief valves with the same pressure settings may be run into a common discharge header. The cross-sectional area of such header must be at least equal to the sum of the individual discharges.

(d) Discharge from a safety-relief device that terminates in or beneath any building is prohibited.

(2) Aboveground containers must have safety-relief valves as follows:

(a) The rate of discharge, which may be provided by one or more valves, must be at least that specified in WAC 296-307-41025(2).

(b) The discharge from safety-relief valves must be vented upward to the open air to prevent impingement of escaping gas upon the container. You must use loose-fitting rain caps. On a container having a water capacity greater than 2,000 gallons, the discharge from the safety-relief valves must be vented upward away from the container to a point at least 7 feet above the container. Provisions must be made so that any liquid or condensate accumulation inside the relief valve or its discharge pipe will not render the valve inoperative. If a drain is used, you must protect the container, adjacent containers, piping, or equipment against impingement of flame resulting from ignition of the product escaping from the drain.

(3) Underground containers must have safety-relief valves as follows:

(a) The discharge from safety-relief valves must be piped upward to a point at least 10 feet above the ground. The discharge lines or pipes must be adequately supported and protected against physical damage.

(b) In areas where the manhole or housing may flood, the discharge from regulator vent lines should be above the highest probable water level.

(c) If no liquid is put into a container until after it is buried and covered, the rate of discharge of the relief valves may be reduced to at least 30 percent of the rate shown in WAC 296-307-41025(2). If liquid fuel is present during installation of containers, the rate of discharge must be the same as for aboveground containers. Only empty containers may be uncovered.

[Statutory Authority: RCW 49.17.040. 98-24-096, § 296-307-44007, filed 12/1/98, effective 3/1/99. 97-09-013, recodified as § 296-307-44007, filed 4/7/97, effective 4/7/97. Statutory Authority: RCW 49.17.040, [49.17.]050 and [49.17.]060. 96-22-048, § 296-306A-44007, filed 10/31/96, effective 12/1/96.]

WAC 296-307-44009 What is the maximum capacity allowed for containers? Individual storage containers must be a maximum of 30,000 gallons water capacity.

[97-09-013, recodified as § 296-307-44009, filed 4/7/97, effective 4/7/97. Statutory Authority: RCW 49.17.040, [49.17.]050 and [49.17.]060. 96-22-048, § 296-306A-44009, filed 10/31/96, effective 12/1/96.]

WAC 296-307-44011 How must storage containers be installed? (1) Each storage container used exclusively in service station operation must comply with the following table. This table outlines the minimum distances from a container to a building, group of buildings, or adjoining property lines that may be built on.

	Minimum distances	
Water capacity per container (gallons)	**Aboveground and underground (feet)**	**Between aboveground containers (feet)**
Up to 2,000	25	3
Over 2,000	50	5

Note: The above distances may be reduced to at least 10 feet for service station buildings of other than wood frame construction.

(a) Readily ignitible material including weeds and long dry grass, must be removed within 10 feet of containers.

(b) The minimum separation between LP-gas containers and flammable liquid tanks must be 20 feet and the minimum separation between a container and the centerline of the dike must be 10 feet.

(c) LP-gas containers located near flammable liquid containers must be protected against the flow or accumulation of flammable liquids by diking, diversion curbs, or grading.

(d) LP-gas containers located within diked areas for flammable liquid containers are prohibited.

(e) Field welding is permitted only on saddle plates or brackets that were applied by the container manufacturer.

(f) When permanently installed containers are interconnected, you must allow for expansion, contraction, vibration, and settling of containers and interconnecting piping. Where flexible connections are used, they must be approved and designed for a bursting pressure of at least five times the vapor pressure of the product at 100°F. Using nonmetallic hose is prohibited for interconnecting containers.

(g) Where high water table or flood conditions may be encountered, you must protect against container flotation.

(2) Aboveground containers must be installed according to this section.

(a) Containers may be installed horizontally or vertically.

(b) Containers must be protected by crash rails or guards to prevent physical damage unless they are protected by location. Servicing vehicles within 10 feet of containers is prohibited.

(c) Container foundations must be of substantial masonry or other noncombustible material. Containers must be mounted on saddles that permit expansion and contraction, and must provide against excess stresses. Corrosion protection must be provided for tank-mounting areas. Structural metal container supports must be protected against fire.

Exception: This protection is not required on prefabricated storage and pump assemblies, mounted on a common base, with container bottom a maximum of 24 inches above ground with water capacity of 2,000 gallons or less, if the piping connected to the storage and pump assembly is flexible enough to minimize breakage or leakage in case container supports fail.

(3) Underground containers must be installed according to this section.

(a) Containers must be given a protective coating before being placed underground. This coating must be equivalent to hot-dip galvanizing or to two coatings of red lead followed by a heavy coating of coal tar or asphalt. During installation, take care to minimize abrasion or other damage to the coating. Repair coating damage before back-filling.

(b) Containers must be set on a firm foundation (firm earth may be used) and surrounded with earth or sand firmly tamped in place. Backfill should be free of rocks or other abrasive materials.

(c) A minimum of 2 feet of earth cover must be provided. Where ground conditions make impractical, equivalent protection against physical damage must be provided. The portion of the container to which manhole and other connections are attached may be left uncovered. If there is vehicle traffic at the site, containers must be protected by a concrete slab or other cover to prevent the weight of a loaded vehicle imposing a load on the container shell.

[97-09-013, recodified as § 296-307-44011, filed 4/7/97, effective 4/7/97. Statutory Authority: RCW 49.17.040, [49.17.]050 and [49.17.]060. 96-22-048, § 296-306A-44011, filed 10/31/96, effective 12/1/96.]

WAC 296-307-44013 What equipment must be protected against tampering? Valves, regulators, gauges, and other container fittings must be protected against tampering and physical damage.

[97-09-013, recodified as § 296-307-44013, filed 4/7/97, effective 4/7/97. Statutory Authority: RCW 49.17.040, [49.17.]050 and [49.17.]060. 96-22-048, § 296-306A-44013, filed 10/31/96, effective 12/1/96.]

WAC 296-307-44015 What requirements apply to the transport truck unloading point? (1) During unloading, the transport truck must not be parked on public thoroughfares and must be at least 5 feet from storage containers. The truck must be positioned so that shut-off valves are accessible.

(2) The filling pipe inlet terminal must not be located within a building nor within 10 feet of any building or driveway. It must be protected against physical damage.

[97-09-013, recodified as § 296-307-44015, filed 4/7/97, effective 4/7/97. Statutory Authority: RCW 49.17.040, [49.17.]050 and [49.17.]060. 96-22-048, § 296-306A-44015, filed 10/31/96, effective 12/1/96.]

WAC 296-307-44017 What requirements apply to piping, valves, and fittings? (1) Piping may be underground, aboveground, or a combination of both. It must be well supported and protected against physical damage and corrosion.

(2) Piping laid beneath driveways must be installed to prevent physical damage by vehicles.

(3) Piping must be wrought iron or steel (black or galvanized), brass or copper pipe; or seamless copper, brass, or steel tubing and must be suitable for a minimum pressure of 250 psig. Pipe joints may be screwed, flanged, brazed, or welded. The use of aluminum alloy piping or tubing is prohibited.

(4) All shut-off valves (liquid or gas) must be suitable for LP-gas service and designed for at least the maximum pressure to which they may be subjected. Valves that may be subjected to container pressure must have a rated working pressure of at least 250 psig.

(5) All materials used for valve seats, packing, gaskets, diaphragms, etc., must be resistant to the action of LP-gas.

(6) Fittings must be steel, malleable iron, or brass having a minimum working pressure of 250 psig. Cast iron pipe fittings, such as ells, tees and unions must not be used.

(7) All piping must be tested after assembly and proved free from leaks at least at the normal operating pressures.

(8) You must allow for expansion, contraction, jarring, and vibration, and for settling. You may use flexible connections.

[97-09-013, recodified as § 296-307-44017, filed 4/7/97, effective 4/7/97. Statutory Authority: RCW 49.17.040, [49.17.]050 and [49.17.]060. 96-22-048, § 296-306A-44017, filed 10/31/96, effective 12/1/96.]

WAC 296-307-44019 What requirements apply to pumps and accessory equipment? All pumps and accessory equipment must be suitable for LP-gas service, and designed for at least the maximum pressure to which they may be subjected. Accessories must have a minimum rated working pressure of 250 psig. Positive displacement pumps must have suitable pressure actuated bypass valves permitting flow from pump discharge to storage container or pump suction.

[97-09-013, recodified as § 296-307-44019, filed 4/7/97, effective 4/7/97. Statutory Authority: RCW 49.17.040, [49.17.]050 and [49.17.]060. 96-22-048, § 296-306A-44019, filed 10/31/96, effective 12/1/96.]

WAC 296-307-44021 What requirements apply to LP-gas dispensing devices? (1) Meters, vapor separators, valves, and fittings in the dispenser must be suitable for LP-gas service and must be designed for a minimum working pressure of 250 psig.

(2) Provisions must be made for venting LP-gas from a dispensing device to a safe location.

(3) Pumps used to transfer LP-gas must allow control of the flow and to prevent leakage or accidental discharge. Means must be provided outside the dispensing device to readily shut off the power in the event of fire or accident.

(4) A manual shut-off valve and an excess flow check valve must be installed downstream of the pump and ahead of the dispenser inlet.

(a) Dispensing hose must be resistant to the action of LP-gas in the liquid phase and designed for a minimum bursting pressure of 1,250 psig.

(b) An excess flow check valve or automatic shut-off valve must be installed at the terminus of the liquid line at the point of attachment of the dispensing hose.

(5) LP-gas dispensing devices must be located at least 10 feet from aboveground storage containers greater than 2,000 gallons water capacity. The dispensing devices must be at least 20 feet from any building (not including canopies), basement, cellar, pit, or line of adjoining property that may be built on and at least 10 feet from sidewalks, streets, or thoroughfares. No drains or blowoff lines must be directed into or in proximity to the sewer systems used for other purposes.

(a) LP-gas dispensing devices must be installed on a concrete foundation or as part of a complete storage and dispensing assembly mounted on a common base, and must be adequately protected from physical damage.

(b) LP-gas dispensing devices must not be installed within a building.

Exception: Dispensing devices may be located under a weather shelter or canopy if the area is not enclosed on more than two sides. If the enclosing sides are adjacent, the area shall be properly ventilated.

(6) Dispensing LP-gas into the fuel container of a vehicle shall be performed by a competent attendant who shall remain at the LP-gas dispenser during the entire transfer operation.

[97-09-013, recodified as § 296-307-44021, filed 4/7/97, effective 4/7/97. Statutory Authority: RCW 49.17.040, [49.17.]050 and [49.17.]060. 96-22-048, § 296-306A-44021, filed 10/31/96, effective 12/1/96.]

WAC 296-307-44023 Is smoking allowed at LP-gas service stations? Smoking is prohibited on the driveway of service stations in the dispensing areas or transport truck unloading areas. Conspicuous signs prohibiting smoking must be posted within sight of the customer being served. Letters on such signs must be at least 4 inches high. The motors of all vehicles being fueled must be shut off during the fueling operations.

[97-09-013, recodified as § 296-307-44023, filed 4/7/97, effective 4/7/97. Statutory Authority: RCW 49.17.040, [49.17.]050 and [49.17.]060. 96-22-048, § 296-306A-44023, filed 10/31/96, effective 12/1/96.]

WAC 296-307-44025 What fire protection must be provided at LP-gas service stations? Each service station must have at least one approved portable fire extinguisher with at least an 8-B, C, rating.

[97-09-013, recodified as § 296-307-44025, filed 4/7/97, effective 4/7/97. Statutory Authority: RCW 49.17.040, [49.17.]050 and [49.17.]060. 96-22-048, § 296-306A-44025, filed 10/31/96, effective 12/1/96.]

Part U-3
Other Hazardous Materials

Dipping and Coating Operations (Dip Tanks)

WAC 296-307-445 Scope.

IMPORTANT:

A **dip tank** is a container holding a liquid other than plain water that is used for dipping or coating. An object may be completely or partially immersed (in a dip tank) or it may be suspended in a vapor coming from the tank.

Exemption: Dip tanks that use a molten material (molten metal, alloy, salt, etc.) are not covered by this chapter.

This chapter **applies** to:

• A dip tank that uses a liquid other than plain water, or the vapor of the liquid, to:

– Clean an object
– Coat an object
– Alter the surface of an object

OR

– Change the character of an object.

• Draining or drying an object that has been dipped or coated.

Examples of covered dipping and coating operations include, but are not limited to:

– Paint dipping
– Anodizing
– Pickling
– Quenching
– Tanning
– Degreasing
– Stripping
– Cleaning
– Dyeing.

Reference: You have to do a hazard assessment to identify hazards or potential hazards in your workplace and determine if PPE is necessary to protect your employees. See personal protective equipment (PPE), WAC 296-307-100 through 296-307-10025.

[Statutory Authority: RCW 49.17.010, 49.17.040, 49.17.050, and 49.17.060. 03-10-068, § 296-307-445, filed 5/6/03, effective 8/1/03.]

WAC 296-307-450 General requirements.

Summary.

Your responsibility:

Safeguard employees working with dip tanks.

You must:

CONSTRUCTION

Construct safe dip tanks

WAC 296-307-45005

VENTILATION

Provide proper ventilation for the vapor area

WAC 296-307-45010

Take additional precautions if you recirculate ventilation system exhaust air into the workplace

WAC 296-307-45015

Take additional precautions when using an exhaust hood

WAC 296-307-45020

INSPECTION

Periodically inspect your dip tanks and associated equipment and correct any deficiencies

WAC 296-307-45025

FIRST AID

Make sure employees working near dip tanks know appropriate first-aid procedures

WAC 296-307-45030

CLEANING

Prepare dip tanks before cleaning

WAC 296-307-45035

WELDING

Protect employees during welding, burning or other work using open flames

WAC 296-307-45045

LIQUIDS HARMFUL TO SKIN

Provide additional protection for employees working near dip tanks that use liquid that may burn, irritate, or otherwise harm the skin

WAC 296-307-45050.

[Statutory Authority: RCW 49.17.010, 49.17.040, 49.17.050, and 49.17.060. 03-10-068, § 296-307-450, filed 5/6/03, effective 8/1/03; 97-09-013, recodified as § 296-307-450, filed 4/7/97, effective 4/7/97. Statutory Authority: RCW 49.17.040, [49.17.]050 and [49.17.]060. 96-22-048, § 296-306A-450, filed 10/31/96, effective 12/1/96.]

Construction

WAC 296-307-45005 Construct safe dip tanks.

You must:

• Make sure dip tanks, including any drain boards, are strong enough to support the expected load.

[Statutory Authority: RCW 49.17.010, 49.17.040, 49.17.050, and 49.17.060. 03-10-068, § 296-307-45005, filed 5/6/03, effective 8/1/03; 97-09-013, recodified as § 296-307-45005, filed 4/7/97, effective 4/7/97. Statutory Authority: RCW 49.17.040, [49.17.]050 and [49.17.]060. 96-22-048, § 296-306A-45005, filed 10/31/96, effective 12/1/96.]

Ventilation

WAC 296-307-45010 Provide proper ventilation for the vapor area.

You must:

• Make sure mechanical ventilation meets the requirements of one or more of the following standards:

– NFPA 34-1995, Standard for Dipping and Coating Processes Using Flammable or Combustible Liquids

– ACGIH's "Industrial Ventilation: A Manual of Recommended Practice" (22nd ed., 1995)

– ANSI Z9.1-1971, Practices for Ventilation and Operation of Open-Surface Tanks and ANSI Z9.2-1979, Fundamentals Governing the Design and Operation of Local Exhaust Systems.

Note: Some, or all, of the consensus standards (such as ANSI and NFPA) may have been revised. If you comply with a later version of a consensus standard, you will be considered to have complied with any previous version of the same consensus standard.

You must:

• Limit the vapor area to the smallest practical space by using mechanical ventilation

• Keep airborne concentration of any substance below twenty-five percent of its lower flammable limit (LFL)

• Make sure mechanical ventilation draws the flow of air into a hood or exhaust duct

• Have a separate exhaust system for each dip tank if the combination of substances being removed could cause a:

– Fire

– Explosion

OR

– Potentially hazardous chemical reaction.

Reference: You need to keep employee exposure within safe levels when the liquid in a dip tank creates an exposure hazard. See Respiratory hazards, chapter 296-307 WAC, Part Y-6.

Note: You may use a tank cover or material that floats on the surface of the liquid to replace or assist ventilation. The method or combination of methods you choose has to maintain the airborne concentration of the hazardous material and the employee's exposure within safe limits.

[Statutory Authority: RCW 49.17.010, 49.17.040, 49.17.050, 49.17.060. 05-01-166, § 296-307-45010, filed 12/21/04, effective 4/2/05; 03-10-068, § 296-307-45010, filed 5/6/03, effective 8/1/03.]

WAC 296-307-45015 Take additional precautions if you recirculate ventilation system exhaust air into the workplace.

You must:

• Only recirculate air that contains no substance at a concentration that could pose a health or safety hazard to employees

• Make sure any exhaust system that recirculates air into the workplace:

– Passes the air through a device that removes contaminants

– Sounds an alarm and automatically shuts down the dip tank operation, if the vapor concentration of any substance in the exhaust air exceeds twenty-five percent of its LFL

– Monitors the concentration of vapor from flammable or combustible liquids with approved equipment.

Note:
• The LFL concentration in the air must be determined after the air passes through the air-cleaning device and before the air reenters the workspace
• Most substances will pose a health hazard at a concentration far below twenty-five percent of its LFL.

[Statutory Authority: RCW 49.17.010, 49.17.040, 49.17.050, and 49.17.060. 03-10-068, § 296-307-45015, filed 5/6/03, effective 8/1/03; 97-09-013, recodified as § 296-307-45015, filed 4/7/97, effective 4/7/97. Statutory Authority: RCW 49.17.040, [49.17.]050 and [49.17.]060. 96-22-048, § 296-306A-45015, filed 10/31/96, effective 12/1/96.]

WAC 296-307-45020 Take additional precautions when using an exhaust hood.

You must:

• Make sure each room with an exhaust hood has a source of outside air that:

– Enters the room in a way that will not interfere with the function of the hood

– Replaces at least ninety percent of the air taken in through the hood.

[Statutory Authority: RCW 49.17.010, 49.17.040, 49.17.050, and 49.17.060. 03-10-068, § 296-307-45020, filed 5/6/03, effective 8/1/03.]

Inspection

WAC 296-307-45025 Periodically inspect your dip tanks and associated equipment and correct any deficiencies.

You must:

• Inspect or test your dip tanks and associated equipment periodically, including:

– Covers

– Overflow pipes

– Bottom drains and valves

– Electrical wiring, equipment, and grounding connections

– Ventilating systems

– Fire extinguishing equipment.

• Inspect the hoods and ductwork of the ventilation system for corrosion and damage and make sure the airflow is adequate:

– At least quarterly during operation

– Prior to operation after a prolonged shutdown.

• Promptly fix any deficiencies found.

Note: • To assist you in tracking your inspections and actions taken from those inspections, you may want to keep a written record
• It is recommended that inspections be at least quarterly even if the system is not operating. Depending on the chemicals in use more frequent inspection may be required.

[Statutory Authority: RCW 49.17.010, 49.17.040, 49.17.050, and 49.17.060. 03-10-068, § 296-307-45025, filed 5/6/03, effective 8/1/03; 97-09-013, recodified as § 296-307-45025, filed 4/7/97, effective 4/7/97. Statutory Authority: RCW 49.17.040, [49.17.]050 and [49.17.]060. 96-22-048, § 296-306A-45025, filed 10/31/96, effective 12/1/96.]

First Aid

WAC 296-307-45030 Make sure employees working near dip tanks know appropriate first-aid procedures.

You must:

• Make sure your employees know the appropriate first-aid procedures for the hazards of your dipping and coating operations.

Note: • First-aid procedures are contained in the material safety data sheet (MSDS) for the chemicals used in the dip tank
• First-aid supplies appropriate for the hazards of the dipping or coating operation need to be located near the dip tank to be considered "readily available" as required by WAC 296-307-03920.

Reference: There are additional requirements that may include providing emergency washing facilities and employee training. See first aid, WAC 296-307-039, and employer chemical hazard communication, WAC 296-307-550.

[Statutory Authority: RCW 49.17.010, 49.17.040, 49.17.050, and 49.17.060. 03-10-068, § 296-307-45030, filed 5/6/03, effective 8/1/03.]

Cleaning

WAC 296-307-45035 Prepare dip tanks before cleaning. You must:

(1) Drain the contents of the tank and open any cleanout doors.

(2) Ventilate the tank to clear any accumulated hazardous vapors.

Reference: There may be requirements that apply before an employee enters a dip tank. See Confined spaces, WAC 296-307-642 and safety procedures, WAC 296-307-320.

[Statutory Authority: RCW 49.17.010, 49.17.040, 49.17.050, 49.17.060. 05-01-166, § 296-307-45035, filed 12/21/04, effective 4/2/05; 03-10-068, § 296-307-45035, filed 5/6/03, effective 8/1/03.]

Welding

WAC 296-307-45045 Protect employees during welding, burning, or other work using open flames.

You must:

• Make sure the dip tank and the area around it are thoroughly cleaned of solvents and vapors before performing work involving:

– Welding

– Burning

OR

– Open flames.

Reference: There are additional requirements for this type of work. See Welding, cutting and brazing, WAC 296-307-475, and Respirators, chapter 296-307 WAC, Part Y-5.

[Statutory Authority: RCW 49.17.010, 49.17.040, 49.17.050, 49.17.060. 05-01-166, § 296-307-45045, filed 12/21/04, effective 4/2/05; 03-10-068, § 296-307-45045, filed 5/6/03, effective 8/1/03.]

Liquids Harmful to Skin

WAC 296-307-45050 Protect employees that use liquids that may burn, irritate, or otherwise harm the skin.

You must:

(1) Make sure washing facilities, including hot water, are available for every ten employees that work with dip tank liquids.

(2) Satisfy medical requirements:

• Make sure an employee with any small skin abrasion, cut, rash, or open sore receives treatment by a properly designated person

• Make sure an employee with a sore, burn, or other skin lesion that needs medical treatment, has a physician's approval before they perform their regular work

• Make sure employees who work with chromic acid receive periodic examinations of their exposed body parts, especially their nostrils.

Note: • Periodic means on a yearly basis unless otherwise indicated
• Any time chromic acid spills onto an employee's skin or their clothing is saturated, a physician should be responsible for evaluating and monitoring the area where chromic acid made contact with the skin.

You must:

(3) Provide lockers or other storage space to prevent contamination of street clothes.

Reference: You have to do a hazard assessment to identify hazards or potential hazards in your workplace and determine if PPE is necessary to protect your employees. See Personal protective equipment (PPE), WAC 296-307-100.

[Statutory Authority: RCW 49.17.010, 49.17.040, 49.17.050, and 49.17.060. 03-10-068, § 296-307-45050, filed 5/6/03, effective 8/1/03.]

WAC 296-307-455 Additional requirements for dip tanks using flammable or combustible liquids.

Summary.

IMPORTANT:

This section applies to:

• Flammable and combustible liquids (flashpoint below 200°F)

• Liquids that have a flashpoint of 200°F (93.3°C) or higher if you:

– Heat the liquid

– Dip a heated object in the tank

Your responsibility:

Safeguard employees working with dip tanks containing flammable or combustible liquids

You must:

CONSTRUCTION

Include additional safeguards when constructing dip tanks

WAC 296-307-45505

Provide overflow pipes

WAC 296-307-45510

Provide bottom drains

WAC 296-307-45515

FIRE PROTECTION

Provide fire protection in the vapor area

WAC 296-307-45520

Provide additional fire protection for large dip tanks

WAC 296-307-45525

ELECTRICAL WIRING AND EQUIPMENT AND SOURCES OF IGNITION

Prevent static electricity sparks or arcs when adding liquids to a dip tank

WAC 296-307-45535

Control ignition sources

WAC 296-307-45540

Provide safe wiring and electrical equipment where the liquid can drip or splash

WAC 296-307-45545

HOUSEKEEPING

Keep the area around dip tanks clear of combustible material and properly dispose of waste

WAC 296-307-45550

HEATING LIQUID

Make sure heating the liquid in your dip tanks does not cause a fire

WAC 296-307-45555

HEAT DRYING

Make sure a heating system used for drying objects does not cause a fire

WAC 296-307-45560

CONVEYORS

Make sure the conveyor system for dip tanks is safe

WAC 296-307-45565

[Statutory Authority: RCW 49.17.010, 49.17.040, 49.17.050, and 49.17.060. 03-10-068, § 296-307-455, filed 5/6/03, effective 8/1/03.]

Construction

WAC 296-307-45505 Include additional safeguards when constructing dip tanks.

You must:

(1) Make sure the dip tank, drain boards (if provided), and supports are made of noncombustible material.

(2) Make sure piping connections on drains and overflow pipes allow easy access to the inside of the pipe for inspection and cleaning.

[Statutory Authority: RCW 49.17.010, 49.17.040, 49.17.050, and 49.17.060. 03-10-068, § 296-307-45505, filed 5/6/03, effective 8/1/03.]

WAC 296-307-45510 Provide overflow pipes.

You must:

• Provide an overflow pipe on dip tanks that:

– Hold more than one hundred fifty gallons of liquid

OR

– Have more than ten square feet of liquid surface area.

• Make sure the overflow pipe is:

– Properly trapped

– Able to prevent the dip tank from overflowing

– Three inches or more (7.6 cm) in diameter

– Discharged to a safe location.

Note: Discharged to a safe location could be a:
• Safe location outside the building
OR
• Closed, properly vented salvage tank or tanks that can hold more than the dip tank.

You must:

• Make sure the bottom of the overflow pipe is at least six inches (15.2 cm) below the top of the tank.

Note: The overflow pipe should be large enough to remove water applied to the liquid surface of the dip tank from automatic sprinklers or other sources in the event of fire. Smaller dip tanks should be equipped with overflow pipes, if practical.

[Statutory Authority: RCW 49.17.010, 49.17.040, 49.17.050, and 49.17.060. 03-10-068, § 296-307-45510, filed 5/6/03, effective 8/1/03.]

WAC 296-307-45515 Provide bottom drains.

Exemption: A bottom drain is not required if:
– The viscosity of the liquid makes it impractical to empty the tank by gravity or pumping
OR
– The dip tank has an automatic closing cover that meets the requirements of WAC 296-307-45530.

You must:

• Provide a bottom drain on all dip tanks that hold more than five hundred gallons of liquid

• Make sure the bottom drain:

– Is properly trapped

– Will empty the dip tank during a fire

– Has pipes large enough to empty the tank within five minutes

– Uses automatic pumps if gravity draining is not practical

– Is capable of both manual and automatic operation

– Discharges to a safe location.

Note: Discharges to a safe location could be a:
• Safe location outside the building
OR
• Closed, properly vented salvage tank or tanks that can hold more than the dip tank.

You must:

• Make sure manual operation of the bottom drain is performed from a safe and easily accessible location.

[Statutory Authority: RCW 49.17.010, 49.17.040, 49.17.050, and 49.17.060. 03-10-068, § 296-307-45515, filed 5/6/03, effective 8/1/03.]

Fire Protection

WAC 296-307-45520 Provide fire protection in the vapor area.

You must:

• Provide a manual fire extinguisher near the tank that is suitable for putting out flammable and combustible liquid fires.

[Statutory Authority: RCW 49.17.010, 49.17.040, 49.17.050, and 49.17.060. 03-10-068, § 296-307-45520, filed 5/6/03, effective 8/1/03.]

WAC 296-307-45525 Provide additional fire protection for large dip tanks.

You must:

• Provide at least one automatic fire extinguishing system or an automatic dip tank cover if the tank:

– Holds one hundred fifty gallons or more of liquid

OR

– Has four square feet or more of liquid surface area.

• Make sure automatic fire extinguishing systems or automatic dip tank covers meet the requirements of Table 1.

Exemption: An automatic fire extinguishing system or an automatic dip tank cover is **not** required for a hardening or tempering tank that:

• Holds less than five hundred gallons

OR

• Has less than twenty-five square feet of liquid surface area.

Table 1: Automatic Fire Protection System Requirements

If you provide:	Then you must:
An automatic fire extinguishing system	• Use extinguishing materials suitable for a fire fueled by the liquid in the tank • Make sure the system protects the: – Tanks – Drain boards – Stock over drain boards.
A dip tank cover	• Make sure the cover is: – Closed by approved automatic devices in the event of fire – Able to be manually activated – Kept closed when the tank is not being used – Made of noncombustible material or metal-clad material with locked metal joints.

[Statutory Authority: RCW 49.17.010, 49.17.040, 49.17.050, and 49.17.060. 03-10-068, § 296-307-45525, filed 5/6/03, effective 8/1/03.]

Electrical Wiring and Equipment and Sources of Ignition

WAC 296-307-45535 Prevent static electricity sparks or arcs when adding liquids to a dip tank.

You must:

• Make sure any portable container used to add liquid to the tank is:

– Electrically bonded to the dip tank

– Positively grounded.

[Statutory Authority: RCW 49.17.010, 49.17.040, 49.17.050, and 49.17.060. 03-10-068, § 296-307-45535, filed 5/6/03, effective 8/1/03.]

WAC 296-307-45540 Control ignition sources.

You must:

(1) Make sure the vapor areas and adjacent areas do not have any:

• Open flames

• Spark producing devices

• Heated surfaces hot enough to ignite vapors.

(2) Use explosion-proof wiring and equipment in the vapor area.

Reference: Electrical wiring and equipment has to meet the requirements of the applicable hazardous (classified) location. See Hazardous (classified) locations, WAC 296-307-37209.

You must:

(3) Prohibit smoking in any vapor area:

• Post an easily seen "NO SMOKING" sign near each dip tank.

[Statutory Authority: RCW 49.17.010, 49.17.040, 49.17.050, and 49.17.060. 03-10-068, § 296-307-45540, filed 5/6/03, effective 8/1/03.]

WAC 296-307-45545 Provide safe electrical wiring and equipment where the liquid can drip or splash.

You must:

• Make sure all electrical wiring and equipment in the vapor area is approved for areas that have:

– Deposits of easily ignited residue

– Explosive vapor.

Exemption: This does not apply to wiring that is:
– In rigid conduit, threaded boxes or fittings
– Has no taps, splices, or terminal connections.

[Statutory Authority: RCW 49.17.010, 49.17.040, 49.17.050, and 49.17.060. 03-10-068, § 296-307-45545, filed 5/6/03, effective 8/1/03.]

Housekeeping

WAC 296-307-45550 Keep the area around dip tanks clear of combustible material and properly dispose of waste.

You must:

(1) Make sure the area surrounding dip tanks is:

– Completely free of combustible debris

– As free of combustible stock as possible.

(2) Provide approved metal waste cans that are:

– Used for immediate disposal of rags and other material contaminated with liquids from dipping or coating operations

– Emptied and the contents properly disposed of at the end of each shift.

[Statutory Authority: RCW 49.17.010, 49.17.040, 49.17.050, and 49.17.060. 03-10-068, § 296-307-45550, filed 5/6/03, effective 8/1/03.]

Heating Liquid

WAC 296-307-45555 Make sure heating the liquid in your dip tanks does not cause a fire.

You must:

• Keep the temperature of the liquid in the dip tank:

– Below the liquid's boiling point

– At least 100°F below the liquid's autoignition temperature.

[Statutory Authority: RCW 49.17.010, 49.17.040, 49.17.050, and 49.17.060. 03-10-068, § 296-307-45555, filed 5/6/03, effective 8/1/03.]

Heat Drying

WAC 296-307-45560 Make sure a heating system used for drying objects does not cause a fire.

You must:

• Make sure the heating system used in a drying operation that could cause ignition:

– Has adequate mechanical ventilation that operates before and during the drying operation

– Shuts down automatically if a ventilating fan fails to maintain adequate ventilation

– Is installed as required by NFPA 86-1999, Standard for Ovens and Furnaces.

Note: Some, or all, of the consensus standards (such as ANSI and NFPA) may have been revised. If you comply with a later version of a consensus standard, you will be considered to have complied with any previous version of the same consensus standard.

[Statutory Authority: RCW 49.17.010, 49.17.040, 49.17.050, and 49.17.060. 03-10-068, § 296-307-45560, filed 5/6/03, effective 8/1/03.]

Conveyors

WAC 296-307-45565 Make sure conveyor systems are safe.

You must:

• Make sure the conveyor system shuts down automatically if:

– The ventilation system fails to maintain adequate ventilation

OR

– There is a fire.

[Statutory Authority: RCW 49.17.010, 49.17.040, 49.17.050, and 49.17.060. 03-10-068, § 296-307-45565, filed 5/6/03, effective 8/1/03.]

WAC 296-307-460 Additional requirements for dip tanks used for specific processes.

Summary.

Your responsibility:

Safeguard employees working with dip tanks used for specific processes

You must:

HARDENING OR TEMPERING

Meet specific requirements if you use a hardening or tempering tank

WAC 296-307-46005

VAPOR DEGREASING

Provide additional safeguards for vapor degreasing tanks

WAC 296-307-46025

SPRAY CLEANING OR DEGREASING

Control liquid spray over an open surface cleaning or degreasing tank

WAC 296-307-46030.

[Statutory Authority: RCW 49.17.010, 49.17.040, 49.17.050, and 49.17.060. 03-10-068, § 296-307-460, filed 5/6/03, effective 8/1/03.]

Hardening or Tempering

WAC 296-307-46005 Meet specific requirements if you use a hardening or tempering tank.

You must:

(1) Provide an automatic fire extinguishing system or an automatic dip tank cover for any hardening and tempering tank that uses flammable or combustible liquids and:

– Holds five hundred gallons (1893 L) or more of liquid

OR

– Has twenty-five square feet (2.37 m^2) or more of liquid surface area.

(2) Prevent fires.

• Make sure hardening and tempering tanks are:

– **Not** located on or near combustible flooring

– Located as far away as practical from furnaces

– Equipped with noncombustible hoods and vents (or equally effective devices) for venting to the outside.

• Treat vent ducts as flues and keep them away from combustible material, particularly roofs.

(3) Make sure air under pressure is not used to:

• Fill the tank

OR

• Agitate the liquid in the tank.

(4) Equip each tank with an alarm that will sound when the temperature is within 50°F (10°C) of the liquid's flashpoint (alarm set point).

(5) Make sure a limit switch shuts down conveyors supplying work to the tank when the temperature reaches the alarm setpoint, if operationally practical.

(6) Have a circulating cooling system if the temperature of the liquid can exceed the alarm set point.

Note: The bottom drain of the tank may be combined with the oil circulating system if the requirements for bottom drains in WAC 296-307-45515 are satisfied.

[Statutory Authority: RCW 49.17.010, 49.17.040, 49.17.050, and 49.17.060. 03-10-068, § 296-307-46005, filed 5/6/03, effective 8/1/03.]

Vapor Degreasing

WAC 296-307-46025 Provide additional safeguards for vapor degreasing tanks.

You must:

(1) Make sure, if the tank has a condenser or a vapor-level thermostat, that it keeps the vapor level at least:

• Thirty-six inches (91 cm) below the top of the tank if the width of the tank is seventy-two inches or more

OR

• One-half the tank width below the top of the tank if the tank is less than seventy-two inches wide.

(2) Make sure, if you use gas as a fuel to heat the tank liquid, that the combustion chamber is airtight (except for the flue opening) to prevent solvent vapors from entering the air-fuel mixture.

(3) Make sure the exhaust flue:

• Is made of corrosion-resistant material

• Extends to the outside

• Has a draft diverter if mechanical exhaust is used.

(4) Take special precautions to keep solvent vapors from mixing with the combustion air of the heater if chlorinated or fluorinated hydrocarbon solvents (for example, trichloroethylene or freon) are used in the dip tank.

(5) Keep the temperature of the heating element low enough to keep a solvent or mixture from:

• Decomposing

OR

• Generating excessive vapor.

[Statutory Authority: RCW 49.17.010, 49.17.040, 49.17.050, and 49.17.060. 03-10-068, § 296-307-46025, filed 5/6/03, effective 8/1/03.]

Spray Cleaning or Degreasing

WAC 296-307-46030 Control liquid spray over an open surface cleaning or degreasing tank.

You must:

• Control the spray to the greatest extent feasible by:

– Enclosing the spraying operation as completely as possible

– Using mechanical ventilation to provide enough inward air velocity to prevent the spray from leaving the vapor area.

Note: Mechanical baffles may be used to help prevent the discharge of spray.

Reference: Spray painting operations are covered in Spray-finishing operations, WAC 296-62-11019.

[Statutory Authority: RCW 49.17.010, 49.17.040, 49.17.050, and 49.17.060. 03-10-068, § 296-307-46030, filed 5/6/03, effective 8/1/03.]

WAC 296-307-465 Definitions.

ACGIH: American Conference of Governmental Industrial Hygienists.

Adjacent area: Any area within twenty feet (6.1 m) of a vapor area that is not separated from the vapor area by tight partitions.

ANSI: American National Standards Institute.

Approved: Approved or listed by a nationally recognized testing laboratory. Refer to Federal Regulation 29 CFR 1910.7, for definition of nationally recognized testing laboratory.

Autoignition temperature: The minimum temperature required to cause self-sustained combustion without any other source of heat.

Combustible liquid: A liquid having a flashpoint of at least 100°F (37.8°C) and below 200°F (93.3°C). Mixtures with at least ninety-nine percent of their components having flashpoints of 200°F (93.3°C) or higher are not considered combustible liquids.

Detearing: A process for removing excess wet coating material from the bottom edge of a dipped or coated object or material by passing it through an electrostatic field.

Dip tank: A container holding a liquid other than plain water that is used for dipping or coating. An object may be immersed (or partially immersed) in a dip tank or it may be suspended in a vapor coming from the tank.

Flammable liquid: Any liquid having a flashpoint below 100°F (37.8°C), except any mixture having components with flashpoints of 100°F (37.8°C) or higher, the total of which make up ninety-nine percent or more of the total volume of the mixture.

Flashpoint: The minimum temperature at which a liquid gives off a vapor in sufficient concentration to ignite when tested by any of the measurement methods described in the definition of flashpoint in WAC 296-307-55060.

Lower flammable limit: The lowest concentration of a material that will propagate a flame. The LFL is usually expressed as a percent by volume of the material in air (or other oxidant).

NFPA: National Fire Protection Association.

Vapor area: Any area in the vicinity of dip tanks, their drain boards or associated drying, conveying, or other equipment where the vapor concentration could exceed twenty-five percent of the lower flammable limit (LFL) for the liquid in the tank.

You: Means the employer.

[Statutory Authority: RCW 49.17.010, 49.17.040, 49.17.050, and 49.17.060. 03-10-068, § 296-307-465, filed 5/6/03, effective 8/1/03.]

Part V
Welding

WAC 296-307-475 Welding, cutting, and brazing.

[97-09-013, recodified as § 296-307-475, filed 4/7/97, effective 4/7/97. Statutory Authority: RCW 49.17.040, [49.17.]050 and [49.17.]060. 96-22-048, § 296-306A-475, filed 10/31/96, effective 12/1/96.]

WAC 296-307-47501 What definitions apply to this part? "Welder" and "welding operator" mean any operator of electric or gas welding and cutting equipment.

All other welding terms are defined according to American Welding Society, Terms and Definitions, A3.0-1969.

[97-09-013, recodified as § 296-307-47501, filed 4/7/97, effective 4/7/97. Statutory Authority: RCW 49.17.040, [49.17.]050 and [49.17.]060. 96-22-048, § 296-306A-47501, filed 10/31/96, effective 12/1/96.]

WAC 296-307-480 Installation and operation of oxygen fuel gas systems for welding and cutting.

[97-09-013, recodified as § 296-307-480, filed 4/7/97, effective 4/7/97. Statutory Authority: RCW 49.17.040, [49.17.]050 and [49.17.]060. 96-22-048, § 296-306A-480, filed 10/31/96, effective 12/1/96.]

WAC 296-307-48001 What general requirements apply to oxygen fuel gas systems? (1) Explosive mixtures of fuel gases and air or oxygen must be guarded against. No accessory that allows air or oxygen to mix with flammable gases prior to use must be allowed unless approved for that purpose.

Exception: Air or oxygen may mix with flammable gases at the burner or in a standard torch.

(2) Acetylene must never be generated, piped (except in approved cylinder manifolds) or used at a pressure in excess of 15 psi gauge pressure or 30 psi absolute pressure. (The 30 psi absolute pressure limit is intended to prevent unsafe use of acetylene in pressurized chambers such as caissons, underground excavations or tunnel construction.) Using liquid acetylene is prohibited.

Exception: This requirement does not apply to storage of acetylene dissolved in a suitable solvent in cylinders manufactured and maintained according to DOT requirements, or to acetylene for chemical use.

(3) Only approved apparatus such as torches, regulators or pressure-reducing valves, acetylene generators, and manifolds must be used. Replacement tips may be used on approved torches, if the replacement tips are made to the same specifications as the original, or when replacements are used with convertor/adaptors that meet the same specifications.

(4) Before leaving any employee in charge of the oxygen or fuel-gas supply equipment, including generators, and oxygen or fuel-gas distribution piping systems, you must ensure that the employee has received proper instruction and is competent to do the work. Rules and instructions covering the operation and maintenance of oxygen or fuel-gas supply equipment including generators, and oxygen or fuel-gas distribution piping systems must be readily available.

[97-09-013, recodified as § 296-307-48001, filed 4/7/97, effective 4/7/97. Statutory Authority: RCW 49.17.040, [49.17.]050 and [49.17.]060. 96-22-048, § 296-306A-48001, filed 10/31/96, effective 12/1/96.]

WAC 296-307-48003 What requirements apply to portable cylinders? All portable cylinders used for storing and shipping compressed gases must be constructed and maintained according to DOT regulations.

(1) Compressed gas cylinders must be legibly marked with either the chemical or the trade name of the gas. The marking must be a permanent stencil, stamp, or label. When-

ever practical, the marking must be located on the shoulder of the cylinder.

(2) Compressed gas cylinders must have connections that meet the requirements of the American National Standard Compressed Gas Cylinder Valve Outlet and Inlet Connections, ANSI B 57.1-1965.

(3) All cylinders with a water weight capacity greater than thirty pounds must have means of connecting a valve protection cap or with a collar or recess to protect the valve.

[97-09-013, recodified as § 296-307-48003, filed 4/7/97, effective 4/7/97. Statutory Authority: RCW 49.17.040, [49.17.]050 and [49.17.]060. 96-22-048, § 296-306A-48003, filed 10/31/96, effective 12/1/96.]

WAC 296-307-48005 What general requirements apply to storing compressed gas cylinders? (1) Cylinders must be kept away from radiators and other sources of heat.

(2) Indoors, cylinders must be stored in a well-protected, well-ventilated, dry area, at least twenty feet from highly combustible materials such as oil or excelsior. Cylinders should be stored in assigned places away from elevators, stairs, or gangways. Assigned storage spaces must be located where cylinders will not be knocked over or damaged by passing or falling objects, or subject to tampering. All cylinder enclosures must be ventilated.

(3) Empty cylinders must have their valves closed.

(4) Valve protection caps on cylinders designed to accept a cap, must always be in place and hand-tight, except when cylinders are in use or connected for use.

[97-09-013, recodified as § 296-307-48005, filed 4/7/97, effective 4/7/97. Statutory Authority: RCW 49.17.040, [49.17.]050 and [49.17.]060. 96-22-048, § 296-306A-48005, filed 10/31/96, effective 12/1/96.]

WAC 296-307-48007 How must fuel-gas cylinders be stored? Cylinders stored indoors, except those in use or attached ready for use, must be limited to a total gas capacity of 2,000 cubic feet or 300 pounds of LP-gas.

(1) Cylinders in excess of 2,000 cubic feet total gas capacity or 300 pounds of LP-gas, must be stored in a separate room or compartment that meets the requirements of 252 (a)(8) and (9) CFR, or cylinders must be kept outside or in a special building. Special buildings, rooms or compartments must be free from open flame for heating or lighting and must be well ventilated. They may also be used for storage of a maximum of 600 pounds of calcium carbide, when contained in metal containers complying with 252 (a)(7)(a) and (b) CFR. Signs should be conspicuously posted in such rooms reading, "Danger—No smoking, matches or open lights," or other equivalent wording.

(2) Acetylene cylinders must be stored valve end up.

[97-09-013, recodified as § 296-307-48007, filed 4/7/97, effective 4/7/97. Statutory Authority: RCW 49.17.040, [49.17.]050 and [49.17.]060. 96-22-048, § 296-306A-48007, filed 10/31/96, effective 12/1/96.]

WAC 296-307-48009 How must oxygen cylinders be stored? (1) Oxygen cylinders must not be stored near highly combustible material, especially oil and grease; or near reserve stocks of carbide and acetylene or other fuel-gas cylinders, or near any other substance likely to cause or accelerate fire; or in an acetylene generator compartment.

(2) Oxygen cylinders stored in outside generator houses must be separated from the generator or carbide storage rooms by a noncombustible partition having a fire-resistance rating of at least one hour. This partition must be without openings and must be gastight.

(3) Oxygen cylinders in storage must be separated from fuel-gas cylinders or combustible materials (especially oil or grease), a minimum of 20 feet or by a noncombustible barrier at least five feet high having a fire-resistance rating of at least one-half hour. (Cylinders "in-use," secured to a hand truck or structural member, with regulators, hoses, and torch temporarily removed for security purposes overnight or weekends, are not considered "in-storage.")

(4) Where a liquid oxygen system is to be used to supply gaseous oxygen for welding or cutting and the system has a storage capacity of more than 13,000 cubic feet of oxygen (measured at 14.7 psi(a) and 70°F), connected in service or ready for service, or more than 25,000 cubic feet of oxygen (measured at 14.7 psi(a) and 70°F), including unconnected reserves on hand at the site, it must meet the requirements of the Standard for Bulk Oxygen Systems at Consumer Sites, NFPA No. 566-1965.

[97-09-013, recodified as § 296-307-48009, filed 4/7/97, effective 4/7/97. Statutory Authority: RCW 49.17.040, [49.17.]050 and [49.17.]060. 96-22-048, § 296-306A-48009, filed 10/31/96, effective 12/1/96.]

WAC 296-307-48011 What general operating procedures apply to working with cylinders and containers? (1) The numbers and markings stamped into cylinders must not be tampered with.

(2) Cylinders, cylinder valves, couplings, regulators, hose, and apparatus must be kept free from oily or greasy substances. Oxygen cylinders or apparatus must not be handled with oily hands or gloves. A jet of oxygen must never be permitted to strike an oily surface, greasy clothes, or enter a fuel oil or other storage tank.

(3) Cylinders must be kept far enough away from the actual welding or cutting operation so that sparks, hot slag, or flame will not reach them, or fire-resistant shields must be provided.

(4) No person, other than the gas supplier, may attempt to mix gases in a cylinder. No one, except the owner of the cylinder or person authorized by the owner, may refill a cylinder.

(5) Cylinders must not be placed where they might become part of an electric circuit. Contacts with third rails, trolley wires, etc., must be avoided.

(6) Fuel-gas cylinders must be placed with valve end up whenever they are in use. Liquefied gases must be stored and shipped with the valve end up.

(7) A suitable cylinder truck, chain, or other steadying device must be used to prevent cylinders from being knocked over while in use.

[97-09-013, recodified as § 296-307-48011, filed 4/7/97, effective 4/7/97. Statutory Authority: RCW 49.17.040, [49.17.]050 and [49.17.]060. 96-22-048, § 296-306A-48011, filed 10/31/96, effective 12/1/96.]

WAC 296-307-48013 What requirements apply to safety devices on cylinders? (1) Valve-protection caps must not be used for lifting cylinders from one vertical position to another. Bars must not be used under valves or valve-protection caps to pry cylinders loose when frozen to the ground or otherwise fixed; we recommend using warm (not boiling)

water. Valve-protection caps are designed to protect cylinder valves from damage.

(2) Cylinders without fixed hand wheels must have keys, handles, or nonadjustable wrenches on valve stems while these cylinders are in service. In multiple cylinder installations only one key or handle is required for each manifold.

(3) No one may tamper with safety devices in cylinders or valves.

(4) Nothing may be placed on top of an acetylene cylinder when in use that may damage the safety device or interfere with the quick closing of the valve.

(5) Where a special wrench is required it must be left in position on the stem of the valve while the cylinder is in use so that the fuel-gas flow can be quickly turned off in case of emergency. In the case of manifolded or coupled cylinders at least one such wrench must always be available for immediate use.

(6) Cylinders with leaking fuse plugs or other leaking safety devices should be plainly marked with a warning not to approach them with a lighted cigarette or other source of ignition. You should notify the supplier promptly and follow the supplier's instructions as to their return.

[97-09-013, recodified as § 296-307-48013, filed 4/7/97, effective 4/7/97. Statutory Authority: RCW 49.17.040, [49.17.]050 and [49.17.]060. 96-22-048, § 296-306A-48013, filed 10/31/96, effective 12/1/96.]

WAC 296-307-48015 How must cylinders be transported? (1) When transporting cylinders by a crane or derrick, a cradle, boat, or suitable platform must be used. Slings or electric magnets are prohibited for this purpose. Valve-protection caps, where cylinder is designed to accept a cap, must always be in place.

(2) Unless cylinders are secured on a special truck, regulators must be removed and valve-protection caps, when provided for, must be put in place before cylinders are moved.

(3) When cylinders are transported by powered vehicle they must be secured in a vertical position.

[97-09-013, recodified as § 296-307-48015, filed 4/7/97, effective 4/7/97. Statutory Authority: RCW 49.17.040, [49.17.]050 and [49.17.]060. 96-22-048, § 296-306A-48015, filed 10/31/96, effective 12/1/96.]

WAC 296-307-48017 How must cylinders be handled? (1) Cylinders must not be dropped or struck or permitted to strike each other violently.

(2) Cylinders must be handled carefully. Cylinders must not be subjected to rough handling, knocks, or falls that are liable to damage the cylinder, valve or safety devices and cause leakage.

(3) Cylinders must never be used as rollers or supports, whether full or empty.

[97-09-013, recodified as § 296-307-48017, filed 4/7/97, effective 4/7/97. Statutory Authority: RCW 49.17.040, [49.17.]050 and [49.17.]060. 96-22-048, § 296-306A-48017, filed 10/31/96, effective 12/1/96.]

WAC 296-307-48019 What requirements apply to cylinder valves? (1) Cylinder valves must be closed before moving cylinders.

(2) Cylinder valves must be closed when work is finished.

(3) Valves of empty cylinders must be closed.

(4) A hammer or wrench must not be used to open cylinder valves. If valves cannot be opened by hand, the supplier must be notified.

(5) Cylinder valves must not be tampered with nor should any attempt be made to repair them. If you have trouble with a cylinder, you should send a report to the supplier indicating the character of the trouble and the cylinder's serial number. You must follow the supplier's instructions on what to do with the cylinder.

(6) Complete removal of the stem from a diaphragm-type cylinder valve must be avoided.

(7) If cylinders are found to have leaky valves or fittings that cannot be stopped by closing of the valve, the cylinders must be taken outdoors away from sources of ignition and slowly emptied.

(8) The cylinder valve must always be opened slowly.

(9) An acetylene cylinder valve must not be opened more than one and one-half turns of the spindle, and preferably no more than three-fourths of a turn.

[97-09-013, recodified as § 296-307-48019, filed 4/7/97, effective 4/7/97. Statutory Authority: RCW 49.17.040, [49.17.]050 and [49.17.]060. 96-22-048, § 296-306A-48019, filed 10/31/96, effective 12/1/96.]

WAC 296-307-48021 What requirements apply to cylinder regulators? (1) Unless connected to a manifold, oxygen from a cylinder must first have an oxygen regulator attached to the cylinder valve.

(2) Before connecting a regulator to a cylinder valve, the valve must be opened slightly and closed immediately. The valve must be opened while standing to one side of the outlet; never in front of it. Fuel-gas cylinder valves must not be cracked near other welding work or near sparks, flame, or other possible sources of ignition.

(3) Before a regulator is removed from a cylinder valve, the cylinder valve must be closed and the gas released from the regulator.

(4) Fuel-gas must not be used from cylinders through torches or other devices equipped with shut-off valves without reducing the pressure through a suitable regulator attached to the cylinder valve or manifold.

[97-09-013, recodified as § 296-307-48021, filed 4/7/97, effective 4/7/97. Statutory Authority: RCW 49.17.040, [49.17.]050 and [49.17.]060. 96-22-048, § 296-306A-48021, filed 10/31/96, effective 12/1/96.]

WAC 296-307-48023 What requirements apply to fuel-gas manifolds? (1) Manifolds must be approved either separately for each component part or as an assembled unit.

(2) Fuel-gas cylinders connected to one manifold inside a building must be limited to a maximum total capacity of 300 pounds of LP-gas or 3,000 cubic feet of other fuel-gas. More than one such manifold with connected cylinders may be located in the same room if the manifolds are at least 50 feet apart or separated by a noncombustible barrier at least 5 feet high having a fire-resistance rating of at least one-half hour.

(3) Exception: Fuel-gas cylinders connected to one manifold having an aggregate capacity exceeding 300 pounds of LP-gas or 3,000 cubic feet of other fuel-gas must be located outdoors, or in a separate building or room constructed according to 252 (a)(8) and (9) CFR.

(4) Separate manifold buildings or rooms may also be used for the storage of drums of calcium carbide and cylinders containing fuel gases as provided in WAC 296-307-48007. Such buildings or rooms must have no open flames for heating or lighting and must be well ventilated.

(5) High-pressure fuel-gas manifolds must have approved pressure regulating devices.

[Statutory Authority: RCW 49.17.040. 98-24-096, § 296-307-48023, filed 12/1/98, effective 3/1/99. 97-09-013, recodified as § 296-307-48023, filed 4/7/97, effective 4/7/97. Statutory Authority: RCW 49.17.040, [49.17.]050 and [49.17.]060. 96-22-048, § 296-306A-48023, filed 10/31/96, effective 12/1/96.]

WAC 296-307-48025 What requirements apply to high pressure oxygen manifolds? This section applies to cylinders with a DOT service pressure above 200 psig.

(1) Manifolds must be approved either separately for each component or as an assembled unit.

(2) Oxygen manifolds must not be located in an acetylene generator room. Oxygen manifolds must be separated from fuel-gas cylinders or combustible materials (especially oil or grease), a minimum distance of 20 feet or by a noncombustible barrier at least 5 feet high having a fire-resistance rating of at least one-half hour.

(3) Oxygen cylinders connected to one manifold must be limited to a total gas capacity of 6,000 cubic feet. More than one such manifold with connected cylinders may be located in the same room if the manifolds are at least 50 feet apart or separated by a noncombustible barrier at least 5 feet high having a fire-resistance rating of at least one-half hour.

(4) Exception: An oxygen manifold, to which cylinders having an aggregate capacity of more than 6,000 cubic feet of oxygen are connected, should be located outdoors or in a separate noncombustible building. Such a manifold, if located inside a building having other occupancy, must be located in a separate room of noncombustible construction having a fire-resistance rating of at least one-half hour or in an area with no combustible material within 20 feet of the manifold.

(5) An oxygen manifold or oxygen bulk supply system that has storage capacity of more than 13,000 cubic feet of oxygen (measured at 14.7 psia and 70°F), connected in service or ready for service, or more than 25,000 cubic feet of oxygen (measured at 14.7 psia and 70°F), including unconnected reserves on hand at the site, must meet the requirements of the Standard for Bulk Oxygen Systems at Consumer Sites, NFPA No. 566-1965.

(6) High-pressure oxygen manifolds must have approved pressure-regulating devices.

[97-09-013, recodified as § 296-307-48025, filed 4/7/97, effective 4/7/97. Statutory Authority: RCW 49.17.040, [49.17.]050 and [49.17.]060. 96-22-048, § 296-306A-48025, filed 10/31/96, effective 12/1/96.]

WAC 296-307-48027 What requirements apply to low pressure oxygen manifolds? This section applies to cylinders with a maximum DOT service pressure of 200 psig.

(1) Manifolds must be of substantial construction suitable for use with oxygen at a pressure of 250 psig. They must have a minimum bursting pressure of 1,000 psig and must be protected by a safety-relief device that will relieve at a maximum pressure of 500 psig.

Note: DOT-4L200 cylinders have safety devices that relieve at a maximum pressure of 250 psig (or 235 psig if vacuum insulation is used).

(2) Hose and hose connections subject to cylinder pressure must meet the requirements of WAC 296-307-48049. Hose must have a minimum bursting pressure of 1,000 psig.

(3) The assembled manifold including leads must be tested and proven gas-tight at a pressure of 300 psig. The fluid used for testing oxygen manifolds must be oil-free and not combustible.

(4) The location of manifolds must meet the requirements of WAC 296-307-48025.

(5) The following sign must be conspicuously posted at each manifold:

Low-Pressure Manifold

Do Not Connect High-Pressure Cylinders

Maximum Pressure—250 PSIG

[Statutory Authority: RCW 49.17.040. 98-24-096, § 296-307-48027, filed 12/1/98, effective 3/1/99. 97-09-013, recodified as § 296-307-48027, filed 4/7/97, effective 4/7/97. Statutory Authority: RCW 49.17.040, [49.17.]050 and [49.17.]060. 96-22-048, § 296-306A-48027, filed 10/31/96, effective 12/1/96.]

WAC 296-307-48029 What requirements apply to manifolding portable outlet headers? (1) Portable outlet headers must not be used indoors except for temporary service where the conditions preclude a direct supply from outlets located on the service piping system.

(2) Each outlet on the service piping from which oxygen or fuel-gas is withdrawn to supply a portable outlet header must have a readily accessible shut-off valve.

(3) Hose and hose connections used for connecting the portable outlet header to the service piping must meet the requirements of WAC 296-307-48051.

(4) Master shut-off valves for both oxygen and fuel-gas must be provided at the entry end of the portable outlet header.

(5) Portable outlet headers for fuel-gas service must have an approved hydraulic back-pressure valve installed at the inlet and preceding the service outlets, unless an approved pressure-reducing regulator, an approved backflow check valve, or an approved hydraulic back-pressure valve is installed at each outlet. Outlets provided on headers for oxygen service may be fitted for use with pressure-reducing regulators or for direct hose connection.

(6) Each service outlet on portable outlet headers must have a valve assembly that includes a detachable outlet seal cap, chained or otherwise attached to the body of the valve.

(7) Materials and fabrication procedures for portable outlet headers must comply with WAC 296-307-48033, 296-307-48035, and 296-307-48041.

(8) Portable outlet headers must have frames that will support the equipment securely in the correct operating position and protect them from damage during handling and operation.

[Statutory Authority: RCW 49.17.040. 98-24-096, § 296-307-48029, filed 12/1/98, effective 3/1/99. 97-09-013, recodified as § 296-307-48029, filed 4/7/97, effective 4/7/97. Statutory Authority: RCW 49.17.040, [49.17.]050 and [49.17.]060. 96-22-048, § 296-306A-48029, filed 10/31/96, effective 12/1/96.]

WAC 296-307-48031 What operating procedures apply to cylinder manifolds? (1) Cylinder manifolds must be installed under the supervision of someone familiar with the proper practices of construction and use.

(2) All component parts used in the methods of manifolding described in WAC 296-307-48023 must have the materials, design and construction approved either separately or as an assembled unit.

(3) All manifolds and parts used in methods of manifolding must be used only for the gas or gases for which they are approved.

(4) When acetylene cylinders are coupled, approved flash arresters must be installed between each cylinder and the coupler block. For outdoor use only, and when the number of cylinders coupled does not exceed three, one flash arrester installed between the coupler block and regulator is acceptable.

(5) Each fuel-gas cylinder lead should have a backflow check valve.

(6) The maximum aggregate capacity of fuel-gas cylinders connected to a portable manifold inside a building must be 3,000 cubic feet of gas.

(7) Acetylene and liquefied fuel-gas cylinders must be manifolded vertically.

(8) The pressure in the gas cylinders connected to and discharged simultaneously through a common manifold must be approximately equal.

[Statutory Authority: RCW 49.17.040. 98-24-096, § 296-307-48031, filed 12/1/98, effective 3/1/99. 97-09-013, recodified as § 296-307-48031, filed 4/7/97, effective 4/7/97. Statutory Authority: RCW 49.17.040, [49.17.]050 and [49.17.]060. 96-22-048, § 296-306A-48031, filed 10/31/96, effective 12/1/96.]

WAC 296-307-48033 How must service piping systems be designed? (1) Piping and fittings must comply with Section 2, Industrial Gas and Air Piping Systems, of the American National Standard Code for Pressure Piping, ANSI B 31.1-1967, if they do not conflict with subsections (2) and (3) of this section.

(2) Pipe must be at least Schedule 40 and fittings must be at least standard weight in sizes up to and including 6-inch nominal.

(3) Copper tubing must be Types K or L according to the Standard Specification for Seamless Copper Water Tube, ASTM B88-66a.

(4) Piping must be steel, wrought iron, brass or copper pipe, or seamless copper, brass or stainless steel tubing, except as provided in subsections (5) through (9) of this section.

(5) Oxygen piping and fittings at pressures in excess of 700 psig, must be stainless steel or copper alloys.

(6) Hose connections and hose complying with WAC 296-307-48051 may be used to connect the outlet of a manifold pressure regulator to piping if the working pressure of the piping is 250 psig or less and the length of the hose is a maximum of 5 feet. Hose must have a minimum bursting pressure of 1,000 psig.

(7) When oxygen is supplied to a service piping system from a low-pressure oxygen manifold without an intervening pressure regulating device, the piping system must have a minimum design pressure of 250 psig. A pressure regulating device must be used at each station outlet when the connected equipment is for use at pressures less than 250 psig.

(8) Piping for acetylene or acetylenic compounds must be steel or wrought iron.

(9) Unalloyed copper must only be used for acetylene or acetylenic compounds in listed equipment.

[Statutory Authority: RCW 49.17.040. 98-24-096, § 296-307-48033, filed 12/1/98, effective 3/1/99. 97-09-013, recodified as § 296-307-48033, filed 4/7/97, effective 4/7/97. Statutory Authority: RCW 49.17.040, [49.17.]050 and [49.17.]060. 96-22-048, § 296-306A-48033, filed 10/31/96, effective 12/1/96.]

WAC 296-307-48035 What requirements apply to piping joints? (1) Joints in steel or wrought iron piping must be welded, threaded or flanged. Fittings, such as ells, tees, couplings, and unions, must be rolled, forged or cast steel, malleable iron or nodular iron. Gray or white cast iron fittings are prohibited.

(2) Joints in brass or copper pipe must be welded, brazed, threaded, or flanged. Socket type joints must be brazed with silver-brazing alloy or similar high melting point (not less than 800°F) filler metal.

(3) Joints in seamless copper, brass, or stainless steel tubing must be approved gas tubing fittings or the joints must be brazed. Socket type joints must be brazed with silver-brazing alloy or similar high melting point (not less than 800°F) filler metal.

[97-09-013, recodified as § 296-307-48035, filed 4/7/97, effective 4/7/97. Statutory Authority: RCW 49.17.040, [49.17.]050 and [49.17.]060. 96-22-048, § 296-306A-48035, filed 10/31/96, effective 12/1/96.]

WAC 296-307-48037 How must service piping systems be installed? (1) Distribution lines must be installed and maintained in a safe operating condition.

(2) Piping may be above or below ground. All piping must be run as directly as practical, protected against physical damage, with an allowance for expansion and contraction, jarring and vibration. Pipe laid underground in earth must be below the frost line and protected against corrosion. After assembly, piping must be thoroughly blown out with air or nitrogen to remove foreign materials. For oxygen piping, only oil-free air, oil-free nitrogen, or oil-free carbon dioxide must be used.

(3) Only piping that has been welded or brazed must be installed in tunnels, trenches or ducts. Shut-off valves must be located outside such conduits. Oxygen piping may be placed in the same tunnel, trench or duct with fuel-gas pipelines, if there is good natural or forced ventilation.

(4) Low points in piping carrying moist gas must be drained into drip pots constructed to permit pumping or draining out the condensate at necessary intervals. Drain valves must be installed for this purpose having outlets normally closed with screw caps or plugs. Open end valves or petcocks are prohibited, except that in drips located outdoors, underground, and not readily accessible, valves may be used at such points if they have means to secure them in the closed position. Pipes leading to the surface of the ground must be cased or jacketed where necessary to prevent loosening or breaking.

(5) Gas cocks or valves must be provided for all buildings at points where they will be readily accessible for shut-

ting off the gas supply to these buildings in any emergency. Underground valve boxes or manholes should be avoided wherever possible. There must be a shut-off valve in the discharge line from the generator, gas holder, manifold or other source of supply.

(6) Shut-off valves must not be installed in safety-relief lines in such a manner that the safety-relief device can be rendered ineffective.

(7) Fittings and lengths of pipe must be examined internally before assembly and, if necessary, freed from scale or dirt. Oxygen piping and fittings must be washed out with a suitable solution that will effectively remove grease and dirt but will not react with oxygen.

Note: Hot water solutions of caustic soda or trisodium phosphate are effective for this purpose.

(8) Piping must be thoroughly blown out after assembly to remove foreign materials. For oxygen piping, oil-free air, oil-free nitrogen, or oil-free carbon dioxide must be used. For other piping, air or inert gas may be used.

(9) When flammable gas lines or other parts of equipment are being purged of air or gas, open lights or other sources of ignition are prohibited near uncapped openings.

(10) No welding or cutting must be performed on an acetylene or oxygen pipeline, including the attachment of hangers or supports, until the line has been purged. Only oil-free air, oil-free nitrogen, or oil-free carbon dioxide must be used to purge oxygen lines.

[97-09-013, recodified as § 296-307-48037, filed 4/7/97, effective 4/7/97. Statutory Authority: RCW 49.17.040, [49.17.]050 and [49.17.]060. 96-22-048, § 296-306A-48037, filed 10/31/96, effective 12/1/96.]

WAC 296-307-48039 How must service piping systems be painted and marked? (1) Underground pipe and tubing and outdoor ferrous pipe and tubing must be covered or painted with a suitable material for protection against corrosion.

(2) Aboveground piping systems must be marked according to the American National Standard Scheme for the Identification of Piping Systems, ANSI A 13.1-1956.

(3) Station outlets must be marked to indicate the name of the gas.

[97-09-013, recodified as § 296-307-48039, filed 4/7/97, effective 4/7/97. Statutory Authority: RCW 49.17.040, [49.17.]050 and [49.17.]060. 96-22-048, § 296-306A-48039, filed 10/31/96, effective 12/1/96.]

WAC 296-307-48041 How must service piping systems be tested? (1) Piping systems must be tested and proved gastight at 1-1/2 times the maximum operating pressure, and must be thoroughly purged of air before being placed in service. The material used for testing oxygen lines must be oil free and noncombustible. Flames must not be used to detect leaks.

(2) When flammable gas lines or other parts of equipment are being purged of air or gas, sources of ignition are prohibited near uncapped openings.

[97-09-013, recodified as § 296-307-48041, filed 4/7/97, effective 4/7/97. Statutory Authority: RCW 49.17.040, [49.17.]050 and [49.17.]060. 96-22-048, § 296-306A-48041, filed 10/31/96, effective 12/1/96.]

WAC 296-307-48043 How must equipment be installed? Equipment shall be installed and used only in the service for which it is approved and as recommended by the manufacturer.

[97-09-013, recodified as § 296-307-48043, filed 4/7/97, effective 4/7/97. Statutory Authority: RCW 49.17.040, [49.17.]050 and [49.17.]060. 96-22-048, § 296-306A-48043, filed 10/31/96, effective 12/1/96.]

WAC 296-307-48045 How must service piping systems be protected? Service piping systems must be protected by pressure relief devices set to function at not more than the design pressure of the systems and discharging upwards to a safe location.

[97-09-013, recodified as § 296-307-48045, filed 4/7/97, effective 4/7/97. Statutory Authority: RCW 49.17.040, [49.17.]050 and [49.17.]060. 96-22-048, § 296-306A-48045, filed 10/31/96, effective 12/1/96.]

WAC 296-307-48047 What requirements apply to piping protective equipment? (1) The fuel-gas and oxygen piping systems, including portable outlet headers must incorporate the protective equipment shown in Figures V-1, V-2, and V-3.

When only a portion of a fuel-gas system is to be used with oxygen, only that portion must meet this requirement.

(2) Approved protective equipment (designated PF in Figs. V-1, V-2, and V-3) must be installed in fuel-gas piping to prevent:

(a) Backflow of oxygen into the fuel-gas supply system;

(b) Passage of a flash back into the fuel-gas supply system; and

(c) Excessive back pressure of oxygen in the fuel-gas supply system. The three functions of the protective equipment may be combined in one device or may be provided by separate devices.

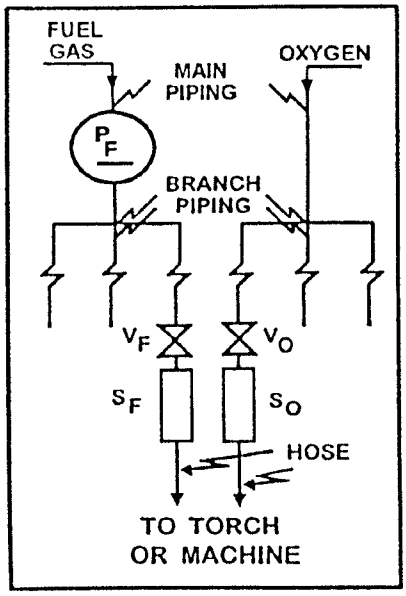

Fig. 1

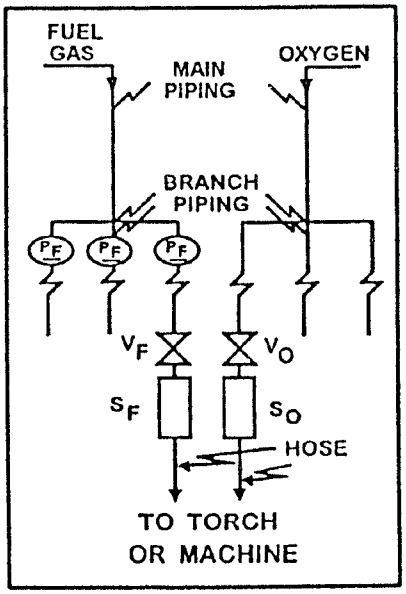

Fig. 2

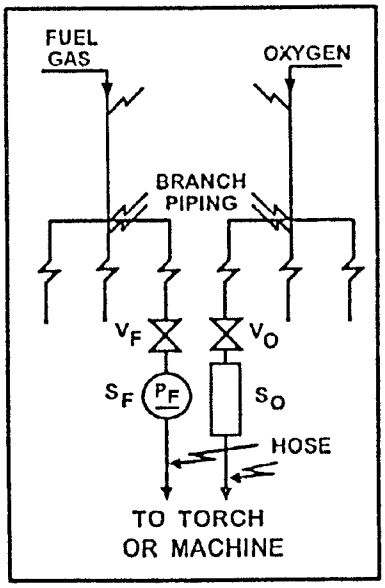

Fig. 3

PF = Protective equipment in fuel-gas piping
VF = Fuel-gas station outlet valve
VO = Oxygen station outlet valve
SF = Backflow prevention device(s) at fuel-gas station outlet
SO = Backflow prevention device(s) at oxygen station outlet

(3) The protective equipment must be located in the main supply line, as in Figure 1 or at the head of each branch line, as in Figure 2 or at each location where fuel-gas is withdrawn, as in Figure 3. Where branch lines are of 2-inch pipe size or larger or of substantial length, protective equipment (designated as PF) shall be located as shown in either 2 or 3.

(4) Backflow protection must be provided by an approved device that will prevent oxygen from flowing into the fuel-gas system or fuel from flowing into the oxygen system (see SF, Figs. 1 and 2).

(5) Flash-back protection must be provided by an approved device that will prevent flame from passing into the fuel-gas system.

(6) Back-pressure protection must be provided by an approved pressure-relief device set at a pressure not greater than the pressure rating of the backflow or the flashback protection device, whichever is lower. The pressure-relief device must be located on the downstream side of the backflow and flashback protection devices. The vent from the pressure-relief device must be at least as large as the relief device inlet and must be installed without low points that may collect moisture. If low points are unavoidable, drip pots with drains closed with screw plugs or caps shall be installed at the low points. The vent terminus must not endanger personnel or property through gas discharge; must be located away from ignition sources; and must terminate in a hood or bend.

(7) If pipeline protective equipment incorporates a liquid, the liquid level must be maintained, and a suitable antifreeze may be used to prevent freezing.

(8) Fuel-gas for use with equipment not requiring oxygen must be withdrawn upstream of the piping protective devices.

[97-09-013, recodified as § 296-307-48047, filed 4/7/97, effective 4/7/97. Statutory Authority: RCW 49.17.040, [49.17.]050 and [49.17.]060. 96-22-048, § 296-306A-48047, filed 10/31/96, effective 12/1/96.]

WAC 296-307-48049 What requirements apply to station outlet protective equipment? (1) A check valve pressure regulator, hydraulic seal, or combination of these devices must be provided at each station outlet, including those on portable headers, to prevent backflow, as shown in Figures 1, 2, and 3 and designated as SF and SO.

(2) When approved pipeline protective equipment (designated PF) is located at the station outlet as in Figure 3, no additional check valve, pressure regulator, or hydraulic seal is required.

(3) Each station outlet must have a shut-off valve (designated VF and VO) installed on the upstream side of other station outlet equipment.

(4) If the station outlet is equipped with a detachable regulator, the outlet must terminate in a union connection that meets the requirements of the Regulator Connection Standards, 1958, Compressed Gas Association.

(5) If the station outlet is connected directly to a hose, the outlet must terminate in a union connection that meets the requirements of the Standard Hose Connection Specifications, 1957, Compressed Gas Association.

(6) Station outlets may terminate in pipe threads to which permanent connections are to be made, such as to a machine.

(7) Station outlets must have a detachable outlet seal cap secured in place. This cap must be used to seal the outlet except when a hose, a regulator, or piping is attached.

(8) Where station outlets are equipped with approved backflow and flashback protective devices, as many as four torches may be supplied from one station outlet through rigid piping, if each outlet from such piping, is equipped with a shut-off valve and if the fuel-gas capacity of any one torch

does not exceed 15 cubic feet per hour. This rule does not apply to machines.

[97-09-013, recodified as § 296-307-48049, filed 4/7/97, effective 4/7/97. Statutory Authority: RCW 49.17.040, [49.17.]050 and [49.17.]060. 96-22-048, § 296-306A-48049, filed 10/31/96, effective 12/1/96.]

WAC 296-307-48051 What requirements apply to hose and hose connections? (1) Hose for oxy-fuel gas service must meet the requirements of the Specification for Rubber Welding Hose, 1958, Compressed Gas Association and Rubber Manufacturers Association.

(2) The generally recognized colors are red for acetylene and other fuel-gas hose, green for oxygen hose, and black for inert-gas and air hose.

(3) When parallel lengths of oxygen and acetylene hose are taped together for convenience and to prevent tangling, a maximum of 4 inches out of 12 inches must be covered by tape.

(4) Hose connections must meet the requirements of the Standard Hose Connection Specifications, 1957, Compressed Gas Association.

(5) Hose connections must be clamped or otherwise securely fastened so they will withstand, without leakage, twice the pressure to which they are normally subjected in service, but never less than a pressure of 300 psi. Oil-free air or an oil-free inert gas must be used for the test.

(6) Hose showing leaks, burns, worn places, or other defects rendering it unfit for service must be repaired or replaced.

[97-09-013, recodified as § 296-307-48051, filed 4/7/97, effective 4/7/97. Statutory Authority: RCW 49.17.040, [49.17.]050 and [49.17.]060. 96-22-048, § 296-306A-48051, filed 10/31/96, effective 12/1/96.]

WAC 296-307-48053 What requirements apply to pressure-reducing regulators? (1) Pressure-reducing regulators must be used only for the gas and pressures for which they are intended. The regulator inlet connections must meet the requirements of the Regulator Connection Standards, 1958, Compressed Gas Association.

(2) When regulators or parts of regulators, including gauges, need repair, the work must be performed by skilled mechanics who have been properly instructed.

(3) Gauges on oxygen regulators must be marked "USE NO OIL."

(4) Union nuts and connections on regulators must be inspected before use to detect faulty seats that may cause leakage of gas when the regulators are attached to the cylinder valves. Damaged nuts or connections must be destroyed.

[97-09-013, recodified as § 296-307-48053, filed 4/7/97, effective 4/7/97. Statutory Authority: RCW 49.17.040, [49.17.]050 and [49.17.]060. 96-22-048, § 296-306A-48053, filed 10/31/96, effective 12/1/96.]

WAC 296-307-485 Installation and operation of resistance welding equipment.

[97-09-013, recodified as § 296-307-485, filed 4/7/97, effective 4/7/97. Statutory Authority: RCW 49.17.040, [49.17.]050 and [49.17.]060. 96-22-048, § 296-306A-485, filed 10/31/96, effective 12/1/96.]

WAC 296-307-48501 What general requirements apply to resistance welding equipment? (1) All equipment must be installed by a qualified electrician according to the requirements of chapter 296-307 WAC Part T. There must be a safety-type disconnecting switch or a circuit breaker or circuit interrupter to open each power circuit to the machine, conveniently located at or near the machine, so that the power can be shut off when the machine or its controls are to be serviced.

(2) Ignitron tubes used in resistance welding equipment must have a thermal protection switch.

(3) Employees designated to operate resistance welding equipment must have been properly instructed and judged competent to operate such equipment.

(4) Controls of all automatic or air and hydraulic clamps must be arranged or guarded to prevent the operator from accidentally activating them.

[Statutory Authority: RCW 49.17.040. 98-24-096, § 296-307-48501, filed 12/1/98, effective 3/1/99. 97-09-013, recodified as § 296-307-48501, filed 4/7/97, effective 4/7/97. Statutory Authority: RCW 49.17.040, [49.17.]050 and [49.17.]060. 96-22-048, § 296-306A-48501, filed 10/31/96, effective 12/1/96.]

WAC 296-307-48503 What requirements apply to portable welding machines? (1) All portable welding guns must have suitable counter-balanced devices for supporting the guns, including cables, unless the design of the gun or fixture makes counterbalancing impractical or unnecessary.

(2) All portable welding guns, transformers, and related equipment that is suspended from overhead structures, eye beams, or trolleys must have safety chains or cables. Safety chains or cables shall be able to support the total shock load in the event of failure of any component of the supporting system.

(3) When trolleys are used to support portable welding equipment, they must have suitable forged steel clevis for the attachment of safety chains. Each clevis must be able to support the total shock load of the suspended equipment in the event of trolley failure.

(4) All initiating switches, including retraction and dual schedule switches, located on the portable welding gun must have suitable guards able to prevent accidental initiation through contact with fixturing, operator's clothing, etc. Initiating switch voltage must be a maximum of 24 volts.

(5) The movable holder, where it enters the gun frame, must have enough clearance to prevent the shearing an operator's fingers if placed on the operating movable holder.

(6) The secondary and case of all portable welding transformers must be grounded. Secondary grounding may be by center tapped secondary or by a center tapped grounding reactor connected across the secondary.

[97-09-013, recodified as § 296-307-48503, filed 4/7/97, effective 4/7/97. Statutory Authority: RCW 49.17.040, [49.17.]050 and [49.17.]060. 96-22-048, § 296-306A-48503, filed 10/31/96, effective 12/1/96.]

WAC 296-307-48505 What requirements apply to flash welding equipment? (1) Flash welding machines must have a hood to control flying flash. In cases of high production, where materials may contain a film of oil and where toxic elements and metal fumes are given off, ventilation must be provided according to WAC 296-307-50009 through 296-307-50029.

(2) For the protection of the operators of nearby equipment, fire-resistant curtains or suitable shields must be set up

around the machine and in such a manner that the operator's movements are not hampered.

(3) If the welding process cannot be isolated, anyone who may be exposed to the hazard of arc flash must be properly protected.

[Statutory Authority: RCW 49.17.040. 98-24-096, § 296-307-48505, filed 12/1/98, effective 3/1/99. 97-09-013, recodified as § 296-307-48505, filed 4/7/97, effective 4/7/97. Statutory Authority: RCW 49.17.040, [49.17.]050 and [49.17.]060. 96-22-048, § 296-306A-48505, filed 10/31/96, effective 12/1/96.]

WAC 296-307-48507 Who must perform a job hazard analysis? A qualified person must perform a job hazard analysis on the operations to be performed on each welding machine to determine the safeguards and personal protective equipment that shall be used for each job.

[97-09-013, recodified as § 296-307-48507, filed 4/7/97, effective 4/7/97. Statutory Authority: RCW 49.17.040, [49.17.]050 and [49.17.]060. 96-22-048, § 296-306A-48507, filed 10/31/96, effective 12/1/96.]

WAC 296-307-48509 What maintenance requirements apply to resistance welding equipment? Qualified maintenance personnel must periodically inspect the equipment and maintain records of the inspections. The operator must be instructed to report any equipment defects to the supervisor and the use of the equipment must be discontinued until safety repairs have been completed.

[97-09-013, recodified as § 296-307-48509, filed 4/7/97, effective 4/7/97. Statutory Authority: RCW 49.17.040, [49.17.]050 and [49.17.]060. 96-22-048, § 296-306A-48509, filed 10/31/96, effective 12/1/96.]

WAC 296-307-490 Application, installation, and operation of arc welding and cutting equipment.

[97-09-013, recodified as § 296-307-490, filed 4/7/97, effective 4/7/97. Statutory Authority: RCW 49.17.040, [49.17.]050 and [49.17.]060. 96-22-048, § 296-306A-490, filed 10/31/96, effective 12/1/96.]

WAC 296-307-49001 What environmental conditions must be taken into account when selecting arc welding equipment?

Note: You may ensure that your equipment is designed for safety by choosing equipment that complies with the Requirements for Electric Arc-Welding Apparatus, NEMA EW-1-1962, National Electrical Manufacturers Association or the Safety Standard for Transformer-Type Arc-Welding Machines, ANSI C33.2-1956, Underwriters' Laboratories.

(1) Standard machines for arc welding service must be designed and constructed to carry their rated load with rated temperature rises where the temperature of the cooling air is a maximum of 40°C (104°F) and where the altitude is a maximum of 3,300 feet, and must be suitable for operation in atmospheres containing gases, dust, and light rays produced by the welding arc.

(2) When exposed to the following or other conditions, machines must be designed to safely meet the requirements of the service.

- Unusually corrosive fumes;
- Steam or excessive humidity;
- Excessive oil vapor;
- Flammable gases;
- Abnormal vibration or shock;
- Excessive dust;
- Weather;
- Unusual seacoast or shipboard conditions.

[97-09-013, recodified as § 296-307-49001, filed 4/7/97, effective 4/7/97. Statutory Authority: RCW 49.17.040, [49.17.]050 and [49.17.]060. 96-22-048, § 296-306A-49001, filed 10/31/96, effective 12/1/96.]

WAC 296-307-49003 What voltages must arc welding equipment use? Open circuit (no load) voltages of arc welding and cutting machines should be as low as possible consistent with satisfactory welding or cutting being done. Following are the maximum limits:

(1) For alternating-current machines:

(a) Manual arc welding and cutting—80 volts.

(b) Automatic (machine or mechanized) arc welding and cutting—100 volts.

(2) For direct-current machines:

(a) Manual arc welding and cutting—100 volts.

(b) Automatic (machine or mechanized) arc welding and cutting—100 volts.

(3) When special welding and cutting processes require values of open circuit voltages higher than the above, means must be provided to prevent the operator from making accidental contact with the high voltage by adequate insulation or other means.

Note: For a.c. welding under wet conditions or warm surroundings where perspiration is a factor, the use of reliable automatic controls for reducing no load voltage is recommended to reduce the shock hazard.

[97-09-013, recodified as § 296-307-49003, filed 4/7/97, effective 4/7/97. Statutory Authority: RCW 49.17.040, [49.17.]050 and [49.17.]060. 96-22-048, § 296-306A-49003, filed 10/31/96, effective 12/1/96.]

WAC 296-307-49005 How must arc welding equipment be designed? (1) A controller integrally mounted in an electric motor driven welder must be able to carry the rated motor current, must be able to make and interrupt stalled rotor current of the motor, and may serve as the running overcurrent device if provided with the number of over-current units as specified by chapter 296-307 WAC Part T. Starters with magnetic undervoltage release should be used with machines installed more than one to a circuit to prevent circuit overload caused by simultaneously starting several motors upon return of voltage.

(2) On all types of arc welding machines, control apparatus must be enclosed except for the operating wheels, levers, or handles.

Note: Control handles and wheels should be large enough to be easily grasped by a gloved hand.

(3) Input power terminals, tap change devices, and live metal parts connected to input circuits must be completely enclosed and accessible only by tools.

(4) Terminals for welding leads should be protected from accidental electrical contact by employees or by metal objects i.e., vehicles, crane hooks, etc. You may provide protection with:

- Dead-front receptacles for plug connections;
- Recessed openings with nonremovable hinged covers;
- Heavy insulating sleeving or taping; or
- Other equivalent electrical and mechanical protection.

If a welding lead terminal that is intended to be used exclusively for connection to the work is connected to the

grounded enclosure, it must be done by a conductor at least two AWG sizes smaller than the grounding conductor and the terminal must be marked to indicate that it is grounded.

(5) No connections for portable control devices (such as push buttons to be carried by the operator) must be connected to an a.c. circuit of higher than 120 volts. Exposed metal parts of portable control devices operating on circuits above 50 volts must be grounded by a grounding conductor in the control cable.

(6) Auto transformers or a.c. reactors must not be used to draw welding current directly from any a.c. power source having a voltage exceeding 80 volts.

[Statutory Authority: RCW 49.17.040. 98-24-096, § 296-307-49005, filed 12/1/98, effective 3/1/99. 97-09-013, recodified as § 296-307-49005, filed 4/7/97, effective 4/7/97. Statutory Authority: RCW 49.17.040, [49.17.]050 and [49.17.]060. 96-22-048, § 296-306A-49005, filed 10/31/96, effective 12/1/96.]

WAC 296-307-49007 How must arc welding equipment be installed? Arc welding equipment, including the power supply, must be installed according to the requirements of chapter 296-307 WAC Part T.

[Statutory Authority: RCW 49.17.040. 98-24-096, § 296-307-49007, filed 12/1/98, effective 3/1/99. 97-09-013, recodified as § 296-307-49007, filed 4/7/97, effective 4/7/97. Statutory Authority: RCW 49.17.040, [49.17.]050 and [49.17.]060. 96-22-048, § 296-306A-49007, filed 10/31/96, effective 12/1/96.]

WAC 296-307-49009 How must arc welding equipment be grounded? (1) The frame or case of the welding machine (except engine-driven machines) must be grounded according to the requirements of chapter 296-307 WAC Part T.

(2) Conduits containing electrical conductors must not be used for completing a work-lead circuit. Pipelines must not be used as a permanent part of a work-lead circuit, but may be used during construction, extension or repair if current is not carried through threaded joints, flanged bolted joints, or caulked joints and special precautions are used to avoid sparking at connection of the work-lead cable.

(3) Using chains, wire ropes, cranes, hoists, and elevators to carry welding current is prohibited.

(4) Where a structure, conveyor, or fixture is regularly used as a welding current return circuit, joints must be bonded or provided with adequate current collecting devices and appropriate periodic inspection should be conducted to ensure that no electrocution, shock, or fire hazard exists.

(5) All ground connections must be checked to determine that they are mechanically strong and electrically adequate for the required current.

[Statutory Authority: RCW 49.17.040. 98-24-096, § 296-307-49009, filed 12/1/98, effective 3/1/99. 97-09-013, recodified as § 296-307-49009, filed 4/7/97, effective 4/7/97. Statutory Authority: RCW 49.17.040, [49.17.]050 and [49.17.]060. 96-22-048, § 296-306A-49009, filed 10/31/96, effective 12/1/96.]

WAC 296-307-49011 What requirements apply to supply connections and conductors? (1) A disconnecting switch or controller must be provided at or near each welding machine without a switch or controller mounted as an integral part of the machine. The switch must meet the requirements of chapter 296-307 WAC Part T. Overcurrent protection must be provided as specified in chapter 296-307 WAC Part T. A disconnect switch with overload protection or equivalent disconnect and protection means, permitted by chapter 296-307 WAC Part T must be provided for each outlet intended for connection to a portable welding machine.

(2) For individual welding machines, the rated current-carrying capacity of the supply conductors must be at least that of the rated primary current of the welding machines.

(3) For groups of welding machines, the rated current-carrying capacity of conductors may be less than the sum of the rated primary currents of the welding machines supplied. The conductor rating must be determined according to the machine loading based on the use to be made of each welding machine and the allowance permissible in the event that all the welding machines supplied by the conductors will not be in use at the same time.

(4) In operations involving several welders on one structure, d.c. welding process requirements may require the use of both polarities; or supply circuit limitations for a.c. welding may require distribution of machines among the phases of the supply circuit. In such cases, no load voltages between electrode holders will be two times normal in d.c. or 1, 1.4, 1.73, or 2 times normal on a.c. machines. Similar voltage differences will exist if both a.c. and d.c. welding are done on the same structure.

(a) All d.c. machines must be connected with the same polarity.

(b) All a.c. machines must be connected to the same phase of the supply circuit and with the same instantaneous polarity.

[Statutory Authority: RCW 49.17.040. 98-24-096, § 296-307-49011, filed 12/1/98, effective 3/1/99. 97-09-013, recodified as § 296-307-49011, filed 4/7/97, effective 4/7/97. Statutory Authority: RCW 49.17.040, [49.17.]050 and [49.17.]060. 96-22-048, § 296-306A-49011, filed 10/31/96, effective 12/1/96.]

WAC 296-307-49013 How must arc welding equipment be operated? (1) Employees assigned to operate or maintain arc welding equipment must be acquainted with the requirements of WAC 296-307-490, 296-307-495, and 296-307-500; if doing gas-shielded arc welding, also Recommended Safe Practices for Gas-Shielded Arc Welding, A6.1-1966, American Welding Society.

(2) Before starting operations, all connections to the machine must be checked to make certain they are properly made. The work lead must be firmly attached to the work; magnetic work clamps shall be freed from adherent metal particles of spatter on contact surfaces. Coiled welding cable must be spread out before use to avoid serious overheating and damage to insulation.

(3) You must ensure that the welding machine frame grounding is checked with special attention given to safety ground connections of portable machines.

(4) Cylinders must be kept away from radiators, piping systems, layout tables, etc., that may be used for grounding electric circuits. Any practice such as the tapping of an electrode against a cylinder to strike an arc is prohibited.

(5) There must be no leaks of cooling water, shielding gas or engine fuel.

(6) You must ensure that the machine has proper switching equipment for shutting down.

(7) Printed rules and instructions covering operation of equipment supplied by the manufacturers must be strictly followed.

(8) Electrode holders when not in use must be placed so that they cannot make electrical contact with persons, conducting objects, fuel or compressed gas tanks.

(9) Cables with splices within 10 feet of the holder are prohibited. The welder should not coil or loop welding electrode cable around parts of the body.

[Statutory Authority: RCW 49.17.040. 98-24-096, § 296-307-49013, filed 12/1/98, effective 3/1/99. 97-09-013, recodified as § 296-307-49013, filed 4/7/97, effective 4/7/97. Statutory Authority: RCW 49.17.040, [49.17.]050 and [49.17.]060. 96-22-048, § 296-306A-49013, filed 10/31/96, effective 12/1/96.]

WAC 296-307-49015 How must arc welding equipment be maintained? (1) The operator should report any equipment defect or safety hazard to the supervisor and discontinue using the equipment until its safety is ensured. Repairs must be made only by qualified persons.

(2) Machines that have become wet must be thoroughly dried and tested before being used.

(3) Work and electrode lead cables should be frequently inspected for wear and damage. Cables with damaged insulation or exposed bare conductors must be replaced. Lengths of work and electrode cables must be joined by connecting means specifically intended for the purpose. The connecting means must have insulation adequate for the service conditions.

[97-09-013, recodified as § 296-307-49015, filed 4/7/97, effective 4/7/97. Statutory Authority: RCW 49.17.040, [49.17.]050 and [49.17.]060. 96-22-048, § 296-306A-49015, filed 10/31/96, effective 12/1/96.]

WAC 296-307-495 Fire prevention and protection.

[97-09-013, recodified as § 296-307-495, filed 4/7/97, effective 4/7/97. Statutory Authority: RCW 49.17.040, [49.17.]050 and [49.17.]060. 96-22-048, § 296-306A-495, filed 10/31/96, effective 12/1/96.]

WAC 296-307-49501 What basic fire prevention precautions must be taken? For more information on these basic precautions and the special precautions of WAC 296-307-49503, including fire protection and prevention responsibilities of welders, cutters, their supervisors (including outside contractors), and management, see the Standard for Fire Prevention in Use of Cutting and Welding Processes, NFPA Standard 51B, 1962.

The basic precautions for fire prevention in welding or cutting work are:

(1) If the object to be welded or cut cannot readily be moved, all movable fire hazards in the vicinity must be taken to a safe place.

(2) If the object to be welded or cut cannot be moved and if all the fire hazards cannot be removed, then guards must be used to confine the heat, sparks, and slag, and to protect the fire hazards.

(3) If the requirements of this section cannot be met, then welding and cutting are prohibited.

[Statutory Authority: RCW 49.17.040. 98-24-096, § 296-307-49501, filed 12/1/98, effective 3/1/99. 97-09-013, recodified as § 296-307-49501, filed 4/7/97, effective 4/7/97. Statutory Authority: RCW 49.17.040, [49.17.]050 and [49.17.]060. 96-22-048, § 296-306A-49501, filed 10/31/96, effective 12/1/96.]

WAC 296-307-49503 What special fire prevention precautions must be taken? When the nature of the work to be performed falls within the scope of WAC 296-307-49501(2), certain additional precautions may be necessary:

(1) Wherever there are floor openings or cracks in the flooring that cannot be closed, precautions must be taken so that no readily combustible materials on the floor below will be exposed to sparks that drop through. The same precautions must be observed with regard to cracks or holes in walls, open doorways, and open or broken windows.

(2) Suitable fire extinguishing equipment must be maintained in a state of readiness for instant use. Such equipment may consist of pails of water, buckets of sand, hose, or portable extinguishers depending upon the nature and quantity of the combustible material exposed.

(3) The following requirements apply to fire watch:

(a) Fire watchers are required whenever welding or cutting is performed in locations where other than a minor fire might develop, or any of the following conditions exist:

(i) Appreciable combustible material, in building construction or contents, closer than 35 feet to the point of operation.

(ii) Appreciable combustibles are more than 35 feet away but are easily ignited by sparks.

(iii) Wall or floor openings within a 35-foot radius expose combustible material in adjacent areas including concealed spaces in walls or floors.

(iv) Combustible materials are adjacent to the opposite side of metal partitions, walls, ceilings, or roofs and are likely to be ignited by conduction or radiation.

(b) Fire watchers must have fire extinguishing equipment readily available and be trained in its use. They must be familiar with facilities for sounding an alarm in the event of a fire. They must watch for fires in all exposed areas, try to extinguish them only when obviously within the capacity of the equipment available, or otherwise sound the alarm. A fire watch must be maintained for at least a half hour after completion of welding or cutting operations to detect and extinguish possible smoldering fires.

(4) Before cutting or welding is permitted, the area must be inspected by the individual responsible for authorizing cutting and welding operations. The responsible individual must designate precautions to be followed in granting authorization to proceed, preferably in the form of a written permit.

(5) Where combustible materials such as paper clippings, wood shavings, or textile fibers are on the floor, the floor must be swept clean for a radius of 35 feet. Combustible floors must be kept wet, covered with damp sand, or protected by fire-resistant shields. Where floors have been wet down, employees operating arc welding or cutting equipment must be protected from possible shock.

(6) Cutting and welding are prohibited in the following situations:

(a) In areas not authorized by management.

(b) In sprinklered buildings while such protection is impaired.

(c) In the presence of explosive atmospheres (mixtures of flammable gases, vapors, liquids, or dusts with air), or where explosive atmospheres may develop inside uncleaned or improperly prepared tanks or equipment that have previ-

ously contained such materials, or that may develop in areas with an accumulation of combustible dusts.

(d) In areas near the storage of large quantities of exposed, readily ignitable materials such as bulk sulphur, baled paper, or cotton.

(7) Where practical, all combustibles must be relocated at least 35 feet from the worksite. Where relocation is impractical, combustibles must be protected with flame-proofed covers or otherwise shielded with metal or asbestos guards or curtains. Edges of covers at the floor should be tight to prevent sparks from going under them. This precaution is also important at overlaps where several covers are used to protect a large pile.

(8) Ducts and conveyor systems that might carry sparks to distant combustibles must be suitably protected or shut down.

(9) Where cutting or welding is done near walls, partitions, ceiling, or roof of combustible construction, fire-resistant shields or guards must be provided to prevent ignition.

(10) If welding is to be done on a metal wall, partition, ceiling, or roof, precautions must be taken to prevent ignition of combustibles on the other side, due to conduction or radiation, preferably by relocating combustibles. Where combustibles are not relocated, a fire watch on the opposite side from the work must be provided.

(11) Welding must not be attempted on a metal partition, wall, ceiling, or roof having a combustible covering nor on walls or partitions of combustible sandwich-type panel construction.

(12) Cutting or welding on pipes or other metal in contact with combustible walls, partitions, ceilings or roofs must not be undertaken if the work is close enough to cause ignition by conduction.

(13) You are responsible for the safe use of cutting and welding equipment on your property and:

(a) Based on fire potentials of plant facilities, you must establish areas and procedures for cutting and welding;

(b) You must designate an individual responsible for authorizing cutting and welding operations in areas not specifically designed for such processes;

(c) You must insist that cutters or welders and their supervisors are suitably trained in the safe operation of their equipment and the safe use of the process; and

(d) You must advise all contractors about flammable materials or hazardous conditions of which they may not be aware.

(14) The supervisor must:

(a) Ensure that cutting and welding equipment is handled and used safely.

(b) Determine the combustible materials and hazardous areas present or likely to be present in the work location.

(c) Protect combustibles from ignition by the following:

(i) Have the work moved to a location free from dangerous combustibles;

(ii) If the work cannot be moved, have the combustibles moved to a safe distance from the work or have the combustibles properly shielded against ignition; and

(iii) See that cutting and welding are so scheduled that plant operations that might expose combustibles to ignition are not started during cutting or welding.

(d) Secure authorization for the cutting or welding operations from the designated management representative.

(e) Determine that the cutter or welder secures their approval that conditions are safe before going ahead;

(f) Determine that fire protection and extinguishing equipment are properly located at the site; and

(g) Ensure fire watches are available at the site when required.

(15) Cutting or welding is permitted only in areas that are or have been made fire safe. Within the confines of an operating plant or building, cutting and welding should preferably be done in a specific area designed for such work, such as a maintenance shop or a detached outside location. Such areas should be of noncombustible or fire-resistive construction, essentially free of combustible and flammable contents, and suitably segregated from adjacent areas. When work cannot be moved practically, as in most construction work, the area must be made safe by removing combustibles or protecting combustibles from ignition sources.

[Statutory Authority: RCW 49.17.040. 98-24-096, § 296-307-49503, filed 12/1/98, effective 3/1/99. 97-09-013, recodified as § 296-307-49503, filed 4/7/97, effective 4/7/97. Statutory Authority: RCW 49.17.040, [49.17.]050 and [49.17.]060. 96-22-048, § 296-306A-49503, filed 10/31/96, effective 12/1/96.]

WAC 296-307-49505 What precautions must be taken when welding or cutting containers? (1) No welding, cutting, or other hot work may be performed on used drums, barrels, tanks or other containers until they have been cleaned thoroughly enough to be certain that there are no flammable materials present or any substances such as greases, tars, acids, or other materials which when subjected to heat, might produce flammable or toxic vapors. Any pipe lines or connections to the drum or vessel must be disconnected or blanked.

(2) All hollow spaces, cavities, or containers must be vented to permit the escape of air or gases before preheating, cutting or welding. Purging with inert gas is recommended.

[97-09-013, recodified as § 296-307-49505, filed 4/7/97, effective 4/7/97. Statutory Authority: RCW 49.17.040, [49.17.]050 and [49.17.]060. 96-22-048, § 296-306A-49505, filed 10/31/96, effective 12/1/96.]

WAC 296-307-49507 What precautions must be taken when welding in confined spaces? (1) When arc welding work is stopped for a substantial time, such as during lunch or overnight, all electrodes must be removed from the holders and the holders carefully located so that accidental contact cannot occur and the machine be disconnected from the power source.

(2) In order to eliminate the possibility of gas escaping through leaks or improperly closed valves, when gas welding or cutting, the torch valves must be closed and the gas supply to the torch positively shut off at some point outside the confined area whenever the torch is not to be used for a substantial period of time, such as during lunch hour or overnight. Where practical, the torch and hose must also be removed from the confined space.

[97-09-013, recodified as § 296-307-49507, filed 4/7/97, effective 4/7/97. Statutory Authority: RCW 49.17.040, [49.17.]050 and [49.17.]060. 96-22-048, § 296-306A-49507, filed 10/31/96, effective 12/1/96.]

WAC 296-307-500 Protection of employees.

[97-09-013, recodified as § 296-307-500, filed 4/7/97, effective 4/7/97. Statutory Authority: RCW 49.17.040, [49.17.]050 and [49.17.]060. 96-22-048, § 296-306A-500, filed 10/31/96, effective 12/1/96.]

WAC 296-307-50001 How must eye protection be selected? (1) Helmets or hand shields must be used during all arc welding or arc cutting operations, excluding submerged arc welding. Goggles should also be worn during arc welding or cutting operations to provide protection from injurious rays from adjacent work, and from flying objects. The goggles may have either clear or colored glass, depending on the amount of exposure to adjacent welding operations. Helpers or attendants must have proper eye protection.

(2) Goggles or other suitable eye protection must be used during all gas welding or oxygen cutting operations. Spectacles without side shields, with suitable filter lenses are permitted for use during gas welding operations on light work, for torch brazing, or for inspection.

(3) All operators and attendants of resistance welding or resistance brazing equipment must use transparent face shields or goggles, depending on the job, to protect their faces or eyes as required.

(4) Suitable goggles must be provided where needed for brazing operations not above.

[97-09-013, recodified as § 296-307-50001, filed 4/7/97, effective 4/7/97. Statutory Authority: RCW 49.17.040, [49.17.]050 and [49.17.]060. 96-22-048, § 296-306A-50001, filed 10/31/96, effective 12/1/96.]

WAC 296-307-50003 What specifications must eye protection meet? (1) Helmets and hand shields must be made of a material that is an insulator for heat and electricity. Helmets, shields and goggles must be not readily flammable and must be able to be sterilized.

(2) Helmets and hand shields must be arranged to protect the face, neck and ears from direct radiant energy from the arc.

(3) Helmets must have filter plates and cover plates designed for easy removal.

(4) All parts must be constructed of a material that will not readily corrode or discolor the skin.

(5) Goggles must be ventilated to prevent fogging of the lenses as much as practical.

(6) Cover lenses or plates should be provided to protect each helmet, hand shield, or goggle filter lens or plate.

(7) All glass for lenses must be tempered, substantially free from scratches, air bubbles, waves and other flaws. Except when a lens is ground to provide proper optical correction for defective vision, the front and rear surfaces of lenses and windows must be smooth and parallel.

(8) Lenses must be marked with the source and shade.

(9) Following is a guide to select proper shade numbers. Individual needs may vary.

Welding Operation	Shade No.
Shielded metal-arc welding—1/16-, 3/32-, 1/8-, 5/32-inch electrodes	10
Gas-shielded arc welding (nonferrous)—1/16-, 3/32-, 1/8-, 5/32-inch electrodes	11
Gas-shielded arc welding (ferrous)—1/16-, 3/32-,1/8-, 5/32-inch electrodes	12
Shielded metal-arc welding: 3/16-, 7/32-, 1/4-inch electrodes	12
5/16-, 3/8-inch electrodes	14
Atomic hydrogen welding	10-14
Carbon arc welding	14
Soldering	2
Torch brazing	3 or 4
Light cutting, up to 1 inch	3 or 4
Medium cutting, 1 inch to 6 inches	4 or 5
Heavy cutting, 6 inches and over	5 or 6
Gas welding (light) up to 1/8 inch	4 or 5
Gas welding (medium) 1/8 inch to 1/2 inch	5 or 6
Gas welding (heavy) 1/2 inch and over	6 or 8

Note: In gas welding or oxygen cutting where the torch produces a high yellow light it is desirable to use a filter or lens that absorbs the yellow or sodium line in the visible light of the operation.

(10) All filter lenses and plates must meet the test for transmission of radiant energy prescribed in ANSI Z 87.1-1968—American National Standard Practice for Occupational and Educational Eye and Face Protection.

(11) Where the work permits, an arc welder should be enclosed in an individual booth painted with a finish of low-reflectivity such as zinc oxide (an important factor for absorbing ultraviolet radiations) and lamp black, or must be enclosed with noncombustible screens similarly painted. Booths and screens must permit circulation of air at floor level. Employees or other persons adjacent to the welding areas must be protected from the rays by noncombustible or flameproof screens or shields or must be required to wear appropriate goggles.

[97-09-013, recodified as § 296-307-50003, filed 4/7/97, effective 4/7/97. Statutory Authority: RCW 49.17.040, [49.17.]050 and [49.17.]060. 96-22-048, § 296-306A-50003, filed 10/31/96, effective 12/1/96.]

WAC 296-307-50005 What protective clothing must welders wear? (1) Employees exposed to the hazards created by welding, cutting, or brazing operations must be protected by personal protective equipment according to the requirements of chapter 296-307 WAC Part H. Appropriate protective clothing required for any welding operation will vary with the size, nature and location of the work to be performed.

(2) The following suggestions may be helpful when choosing protective clothing:

(a) Except when engaged in light work, all welders should wear flameproof gauntlet gloves.

(b) Flameproof aprons made of leather, asbestos, or other suitable material may help to protect against radiated heat and sparks.

(c) Woolen clothing is better than cotton because it is less easily ignited and helps to protect the welder from changes in temperature. Cotton clothing, if used, should be chemically treated to reduce its combustibility. All outer clothing such as jumpers or overalls should be reasonably free from oil or grease.

(d) Sparks may lodge in rolled-up sleeves, pockets, or cuffs. Therefore sleeves and collars should be buttoned, and clothing should have no front pockets. Trousers or overalls should be uncuffed.

(e) For heavy work, fire-resistant leggings, high boots, or other equivalent means should be used.

(f) In production work a sheet metal screen in front of the employee's legs can provide further protection against sparks and molten metal in cutting operations.

(g) Capes or shoulder covers made of leather or other suitable materials should be worn during overhead welding or cutting operations. Leather skull caps may be worn under helmets to prevent head burns.

(h) For welding and cutting overhead or in extremely confined spaces, ear protection is sometimes desirable.

(i) Where there is exposure to sharp or heavy falling objects, or a hazard of bumping in confined spaces, hard hats or head protectors must be used.

[Statutory Authority: RCW 49.17.040. 98-24-096, § 296-307-50005, filed 12/1/98, effective 3/1/99. 97-09-013, recodified as § 296-307-50005, filed 4/7/97, effective 4/7/97. Statutory Authority: RCW 49.17.040, [49.17.]050 and [49.17.]060. 96-22-048, § 296-306A-50005, filed 10/31/96, effective 12/1/96.]

WAC 296-307-50007 What other requirements apply to employee protection? (1) You must ensure that a welder or helper working on platforms, scaffolds, or runways is protected against falling by using railings, safety belts, life lines, or other equally effective safeguards.

(2) Welders must place welding cable and other equipment so that it is clear of passageways, ladders, and stairways.

[97-09-013, recodified as § 296-307-50007, filed 4/7/97, effective 4/7/97. Statutory Authority: RCW 49.17.040, [49.17.]050 and [49.17.]060. 96-22-048, § 296-306A-50007, filed 10/31/96, effective 12/1/96.]

WAC 296-307-50009 What employee protection must be provided in confined spaces? "Confined space" means a relatively small or restricted space such as a tank, boiler, pressure vessel, or small compartment of a ship.

(1) Confined spaces must be ventilated. For ventilation requirements see WAC 296-307-50011 through 296-307-50029.

(2) When welding or cutting in a confined space, the gas cylinders and welding machines must be left outside. Before operations are started, heavy portable equipment mounted on wheels must be securely blocked to prevent accidental movement.

(3) Where a welder must enter a confined space through a manhole or other small opening, means must be provided for quickly removing the welder in case of emergency. When safety belts and lifelines are used, they must be attached so that the welder's body cannot be jammed in a small exit opening. An attendant with a preplanned rescue procedure must be stationed outside to observe the welder at all times and be able to put rescue operations into effect.

(4) After welding operations are completed, the welder must mark the hot metal or provide some other means of warning other employees.

[Statutory Authority: RCW 49.17.040. 98-24-096, § 296-307-50009, filed 12/1/98, effective 3/1/99. 97-09-013, recodified as § 296-307-50009, filed 4/7/97, effective 4/7/97. Statutory Authority: RCW 49.17.040, [49.17.]050 and [49.17.]060. 96-22-048, § 296-306A-50009, filed 10/31/96, effective 12/1/96.]

WAC 296-307-50011 What general requirements apply to welding ventilation? (1) The following three factors in arc and gas welding must be considered when determining the amount of contamination to which welders may be exposed:

(a) Dimensions of space in which welding is to be done (especially ceiling height);

(b) Number of welders; and

(c) The possibility of hazardous fumes, gases, or dust according to the metals involved.

(2) Other factors involved may require ventilation or respiratory protective devices as needed to meet the requirements of this section. Such factors include:

(a) Atmospheric conditions;

(b) Heat generated; and

(c) Presence of volatile solvents.

(3) When welding must be performed in a space entirely screened on all sides, the screens must be arranged so that no serious restriction of ventilation exists. The screens should be mounted so that they are about 2 feet above the floor unless the work is performed at so low a level that the screen must be extended nearer to the floor to protect nearby employees from the glare of welding.

(4) Local exhaust or general ventilating systems must be provided and arranged to keep the amount of toxic fumes, gases, or dusts below the maximum allowable in chapter 296-62 WAC.

Note: A number of potentially hazardous materials are employed in fluxes, coatings, coverings, and filler metals used in welding and cutting or are released to the atmosphere during welding and cutting. These include but are not limited to the materials itemized in WAC 296-307-50019 through 296-307-50029.

(5) You must determine which potentially hazardous materials are associated with welding and cutting and inform employees through signs, labels or other appropriate means.

(a) Welding may produce fumes and gases hazardous to health. Avoid breathing these fumes and gases. Use adequate ventilation. See ANSI Z 49.1-1967, Safety in Welding and Cutting, published by the American Welding Society.

(b) Brazing (welding) filler metals containing cadmium in significant amounts must carry the following notice on tags, boxes, or other containers:

WARNING
CONTAINS CADMIUM—POISONOUS FUMES MAY BE FORMED ON HEATING

• Do not breathe fumes. Use only with adequate ventilation such as fume collectors, exhaust ventilators, or air-supplied respirators. See ANSI Z 49.1-1967.

• If chest pain, cough, or fever develops after use call physician immediately.

• Keep children away when using.

(c) Brazing and gas welding fluxes containing fluorine compounds must have a cautionary wording to indicate that they contain fluorine compounds. The American Welding Society recommends the following for brazing and gas welding fluxes:

CAUTION
CONTAINS FLUORIDES

This flux when heated gives off fumes that may irritate eyes, nose and throat.

- Avoid fumes. Use only in well-ventilated spaces.
- Avoid contact of flux with eyes or skin.
- Do not take internally.

[Statutory Authority: RCW 49.17.040. 98-24-096, § 296-307-50011, filed 12/1/98, effective 3/1/99. 97-09-013, recodified as § 296-307-50011, filed 4/7/97, effective 4/7/97. Statutory Authority: RCW 49.17.040, [49.17.]050 and [49.17.]060. 96-22-048, § 296-306A-50011, filed 10/31/96, effective 12/1/96.]

WAC 296-307-50013 What ventilation must be provided for general welding and cutting? (1) Mechanical ventilation must be provided when welding or cutting is done on metals not covered in WAC 296-307-50019 through 296-307-50029 in the following locations:

(a) In a space of less than 10,000 cubic feet per welder.

(b) In a room with a ceiling height of less than 16 feet.

(c) In confined spaces or where the welding space contains partitions, balconies, or other structural barriers to the extent that they significantly obstruct cross-ventilation.

(2) Ventilation must be at the minimum rate of 2,000 cubic feet per minute per welder.

Exception: This requirement does not apply where local exhaust hoods and booths that meet the requirements of WAC 296-307-50015, or airline respirators approved by the Mine Safety and Health Administration (MSHA) and the National Institute for Occupational Safety and Health (NIOSH) for such purposes are provided. Natural ventilation is considered sufficient for welding or cutting operations where the restrictions in subsection (1) of this section are not present.

[Statutory Authority: RCW 49.17.040. 98-24-096, § 296-307-50013, filed 12/1/98, effective 3/1/99. 97-09-013, recodified as § 296-307-50013, filed 4/7/97, effective 4/7/97. Statutory Authority: RCW 49.17.040, [49.17.]050 and [49.17.]060. 96-22-048, § 296-306A-50013, filed 10/31/96, effective 12/1/96.]

WAC 296-307-50015 What requirements apply to local exhaust hoods and booths? Mechanical local exhaust ventilation may be provided by either of the following:

(1) Freely movable hoods intended to be placed by the welder as near as practical to the work being welded and provided with a rate of airflow sufficient to maintain a velocity in the direction of the hood of 100 linear feet per minute in the zone of welding when the hood is at its most remote distance from the point of welding. The rates of ventilation required to accomplish this control velocity using a 3-inch wide flanged suction opening are shown in the following table:

Welding zone	Minimum air flow cubic feet/minutes	Duct diameter inches
4 to 6 inches from arc or torch	150	3
6 to 8 inches from arc or torch	275	3-1/2
8 to 10 inches from arc or torch	425	4-1/2
10 to 12 inches from arc or torch	600	5-1/2

1 When brazing with cadmium bearing materials or when cutting on such materials increased rates of ventilation may be required.
2 Nearest half-inch duct diameter based on 4,000 feet per minute velocity in pipe.

(2) A fixed enclosure with a top and at least two sides that surround the welding or cutting operations and with a rate of airflow sufficient to maintain a velocity away from the welder of not less than 100 linear feet per minute.

[97-09-013, recodified as § 296-307-50015, filed 4/7/97, effective 4/7/97. Statutory Authority: RCW 49.17.040, [49.17.]050 and [49.17.]060. 96-22-048, § 296-306A-50015, filed 10/31/96, effective 12/1/96.]

WAC 296-307-50017 What ventilation must be provided in confined spaces? (1) All welding and cutting operations carried on in confined spaces must be adequately ventilated to prevent the accumulation of toxic materials or possible oxygen deficiency. This applies to welders, helpers, and other employees in the immediate vicinity. All replacement air must be clean and respirable.

(2) In circumstances where it is impossible to provide such ventilation, airline respirators or hose masks approved by the Mine Safety and Health Administration (MSHA) and the National Institute for Occupational Safety and Health (NIOSH) for this purpose must be used.

(3) In areas immediately hazardous to life, hose masks with blowers or self-contained breathing equipment must be used. The breathing equipment must be approved by the Mine Safety and Health Administration (MSHA) and the National Institute for Occupational Safety and Health (NIOSH).

(4) Where welding operations are carried on in confined spaces and where welders and helpers are provided with hose masks, hose masks with blowers or self-contained breathing equipment approved by the Mine Safety and Health Administration (MSHA) and the National Institute for Occupational Safety and Health (NIOSH), an employee must be stationed on the outside of such confined spaces to ensure the safety of those working within.

(5) Oxygen must not be used for ventilation.

[97-09-013, recodified as § 296-307-50017, filed 4/7/97, effective 4/7/97. Statutory Authority: RCW 49.17.040, [49.17.]050 and [49.17.]060. 96-22-048, § 296-306A-50017, filed 10/31/96, effective 12/1/96.]

WAC 296-307-50019 What requirements apply to welding fluorine compounds? In confined spaces, welding or cutting involving fluxes, coverings, or other materials that contain fluorine compounds must be done according to WAC 296-307-50017.

"Fluorine compound" means a compound that contains fluorine as an element in chemical combination, not as a free gas.

Note: The need for local exhaust ventilation or airline respirators for welding or cutting in other than confined spaces will depend on the circumstances. However, such protection is desirable for fixed-location production welding and for all production welding on stainless steels. Where air samples taken at the welding location indicate that the fluorides liberated are below the maximum allowable concentration, such protection is not necessary.

[Statutory Authority: RCW 49.17.040. 98-24-096, § 296-307-50019, filed 12/1/98, effective 3/1/99. 97-09-013, recodified as § 296-307-50019, filed 4/7/97, effective 4/7/97. Statutory Authority: RCW 49.17.040, [49.17.]050

and [49.17.]060. 96-22-048, § 296-306A-50019, filed 10/31/96, effective 12/1/96.]

WAC 296-307-50021 What requirements apply to welding zinc? (1) In confined spaces welding or cutting involving zinc-bearing base or filler metals or metals coated with zinc-bearing materials must be done according to WAC 296-307-50017.

(2) Indoors, welding or cutting involving zinc-bearing base or filler metals coated with zinc-bearing materials must be done according to WAC 296-307-50015.

[Statutory Authority: RCW 49.17.040. 98-24-096, § 296-307-50021, filed 12/1/98, effective 3/1/99. 97-09-013, recodified as § 296-307-50021, filed 4/7/97, effective 4/7/97. Statutory Authority: RCW 49.17.040, [49.17.]050 and [49.17.]060. 96-22-048, § 296-306A-50021, filed 10/31/96, effective 12/1/96.]

WAC 296-307-50023 What requirements apply to welding lead? (1) In confined spaces, welding involving lead-base metals (erroneously called lead-burning) must be done according to WAC 296-307-50017.

(2) Indoors, welding involving lead-base metals must be done according to WAC 296-307-50015.

(3) In confined spaces or indoors, welding or cutting involving metals containing lead, other than as an impurity, or involving metals coated with lead-bearing materials, including paint, must be done using local exhaust ventilation or airline respirators. Outdoors, such operations must be done using respiratory protective equipment approved by the Mine Safety and Health Administration (MSHA) and the National Institute for Occupational Safety and Health (NIOSH) for such purposes. In all cases, employees in the immediate vicinity of the cutting operation must be protected as necessary by local exhaust ventilation or airline respirators.

Note: See chapter 296-62 WAC for additional requirements on lead.

[Statutory Authority: RCW 49.17.040. 98-24-096, § 296-307-50023, filed 12/1/98, effective 3/1/99. 97-09-013, recodified as § 296-307-50023, filed 4/7/97, effective 4/7/97. Statutory Authority: RCW 49.17.040, [49.17.]050 and [49.17.]060. 96-22-048, § 296-306A-50023, filed 10/31/96, effective 12/1/96.]

WAC 296-307-50025 What requirements apply to welding beryllium? Welding or cutting indoors, outdoors, or in confined spaces involving beryllium-containing base or filler metals must be done using local exhaust ventilation and airline respirators unless atmospheric tests under the most adverse conditions have established that employee exposure is within the acceptable concentrations defined by WAC 296-307-62625. In all cases, employees in the immediate vicinity of the welding or cutting operations must be protected as necessary by local exhaust ventilation or airline respirators.

[Statutory Authority: RCW 49.17.010, 49.17.040, 49.17.050, 49.17.060. 05-01-166, § 296-307-50025, filed 12/21/04, effective 4/2/05. 97-09-013, recodified as § 296-307-50025, filed 4/7/97, effective 4/7/97. Statutory Authority: RCW 49.17.040, [49.17.]050 and [49.17.]060. 96-22-048, § 296-306A-50025, filed 10/31/96, effective 12/1/96.]

WAC 296-307-50027 What requirements apply to welding cadmium? (1) Welding or cutting indoors or in confined spaces involving cadmium-bearing or cadmium-coated base metals must be done using local exhaust ventilation or airline respirators unless atmospheric tests under the most adverse conditions have established that employee exposure is within the acceptable concentrations defined by chapter 296-62 WAC. Outdoors, such operations must be done using respiratory protective equipment such as fume respirators approved by the Mine Safety and Health Administration (MSHA) and the National Institute for Occupational Safety and Health (NIOSH) for such purposes.

(2) Welding (brazing) involving cadmium-bearing filler metals must be done using ventilation as prescribed in WAC 296-307-50015 or 296-307-50017 if the work is to be done in a confined space.

Note: See chapter 296-62 WAC for additional requirements on cadmium.

[Statutory Authority: RCW 49.17.040. 98-24-096, § 296-307-50027, filed 12/1/98, effective 3/1/99. 97-09-013, recodified as § 296-307-50027, filed 4/7/97, effective 4/7/97. Statutory Authority: RCW 49.17.040, [49.17.]050 and [49.17.]060. 96-22-048, § 296-306A-50027, filed 10/31/96, effective 12/1/96.]

WAC 296-307-50029 What requirements apply to welding mercury? Welding or cutting indoors or in a confined space involving metals coated with mercury-bearing materials, including paint, must be done using local exhaust ventilation or airline respirators unless atmospheric tests under the most adverse conditions have established that employee exposure is within the acceptable concentrations defined by WAC 296-307-62625. Outdoors, such operations must be done using respiratory protective equipment approved by the Mine Safety and Health Administration (MSHA) and the National Institute for Occupational Safety and Health (NIOSH) for such purposes.

[Statutory Authority: RCW 49.17.010, 49.17.040, 49.17.050, 49.17.060. 05-01-166, § 296-307-50029, filed 12/21/04, effective 4/2/05. 97-09-013, recodified as § 296-307-50029, filed 4/7/97, effective 4/7/97. Statutory Authority: RCW 49.17.040, [49.17.]050 and [49.17.]060. 96-22-048, § 296-306A-50029, filed 10/31/96, effective 12/1/96.]

Part W
Powered Industrial Trucks (Forklifts)

WAC 296-307-520 Powered industrial trucks (forklifts).

[97-09-013, recodified as § 296-307-520, filed 4/7/97, effective 4/7/97. Statutory Authority: RCW 49.17.040, [49.17.]050 and [49.17.]060. 96-22-048, § 296-306A-520, filed 10/31/96, effective 12/1/96.]

WAC 296-307-52001 What does this section cover? WAC 296-307-520 applies to all powered industrial trucks used in agricultural operations.

[Statutory Authority: RCW 49.17.040. 98-24-096, § 296-307-52001, filed 12/1/98, effective 3/1/99. 97-09-013, recodified as § 296-307-52001, filed 4/7/97, effective 4/7/97. Statutory Authority: RCW 49.17.040, [49.17.]050 and [49.17.]060. 96-22-048, § 296-306A-52001, filed 10/31/96, effective 12/1/96.]

WAC 296-307-52003 What is a "powered industrial truck"? "Powered industrial truck" (or "truck") means a fork truck, industrial tractor, platform lift truck, motorized hand truck, or other specialized industrial trucks, powered by electric motors or internal combustion engines. The definition does not include compressed gas-operated industrial trucks, tractor-mounted forklifts, or vehicles intended primarily for earth moving or over-the-road hauling.

[Statutory Authority: RCW 49.17.040. 98-24-096, § 296-307-52003, filed 12/1/98, effective 3/1/99. 97-09-013, recodified as § 296-307-52003, filed 4/7/97, effective 4/7/97. Statutory Authority: RCW 49.17.040, [49.17.]050 and [49.17.]060. 96-22-048, § 296-306A-52003, filed 10/31/96, effective 12/1/96.]

WAC 296-307-52005 What manufacturer's requirements apply to powered industrial trucks? (1) All powered industrial trucks in use by an employer must meet the applicable requirements of design, construction and stability as defined by the American National Standards Institute B56.1-1969, Safety Standards for Powered Industrial Trucks, except for vehicles intended primarily for earth moving or over-the-road hauling. All new powered industrial trucks acquired and used by an employer on or after March 1, 2000, must meet the applicable requirements of design, construction and stability as defined in ASME B56.1-1993. The employer must ensure that all powered industrial trucks are inspected, maintained and operated in accordance with this section and the manufacturer's recommendations and specifications.

(2) Approved trucks must have a label indicating approval by the testing laboratory as meeting the specifications and requirements of ANSI B56.1-1969.

(3) Modifications or additions must only be performed with the manufacturer's prior written approval. When modifications or additions are made, capacity, operation, and maintenance instruction plates, tags, or decals must be changed accordingly.

(4) If the truck is equipped with front-end attachments other than factory installed attachments, it must be marked to identify the attachments and show the approximate weight of the truck and attachment combination at maximum elevation with the load centered from side to side.

(5) The user must ensure that all nameplates and markings are in place and legible.

[Statutory Authority: RCW 49.17.010, [49.17].040 and [49.17].050. 00-01-176, § 296-307-52005, filed 12/21/99, effective 3/1/00. Statutory Authority: RCW 49.17.040. 98-24-096, § 296-307-52005, filed 12/1/98, effective 3/1/99. 97-09-013, recodified as § 296-307-52005, filed 4/7/97, effective 4/7/97. Statutory Authority: RCW 49.17.040, [49.17.]050 and [49.17.]060. 96-22-048, § 296-306A-52005, filed 10/31/96, effective 12/1/96.]

WAC 296-307-52007 What are the classifications of powered industrial trucks? Powered industrial trucks are identified according to the following classifications:

(1) "D" refers to trucks that are diesel engine powered that have minimum safeguards against inherent fire hazards.

(2) "DS" refers to diesel powered trucks that, in addition to meeting all the requirements for the type D trucks, with additional safeguards to the exhaust, fuel, and electrical systems.

(3) "DY" refers to diesel powered trucks that have all the safeguards of the DS trucks; in addition, any electrical equipment is completely enclosed. They are equipped with temperature limitation features.

(4) "E" refers to electrically powered trucks with minimum acceptable safeguards against inherent fire hazards.

(5) "ES" refers to electrically powered trucks that, in addition to all of the requirements for the E trucks, are provided with additional safeguards to the electrical system to prevent emission of hazardous sparks and to limit surface temperatures.

(6) "EE" refers to electrically powered trucks that have, in addition to all of the requirements for the E and ES type trucks, have their electric motors and all other electrical equipment completely enclosed.

(7) "EX" refers to electrically powered trucks that differ from E, ES, or EE type trucks in that the electrical fittings and equipment are so designed, constructed, and assembled to be used in atmospheres containing flammable vapors or dusts.

(8) "G" refers to gasoline powered trucks that have minimum acceptable safeguards against inherent fire hazards.

(9) "GS" refers to gasoline powered trucks with additional safeguards to the exhaust, fuel, and electrical systems.

(10) "LP" refers to liquified petroleum gas-powered trucks that have minimum acceptable safeguards against inherent fire hazards.

(11) "LPS" refers to LP-gas powered trucks that in addition to meeting the requirements for LP trucks, are provided with additional safeguards to the exhaust, fuel, and electrical systems.

[Statutory Authority: RCW 49.17.010, [49.17].040 and [49.17].050. 00-01-176, § 296-307-52007, filed 12/21/99, effective 3/1/00. 97-09-013, recodified as § 296-307-52007, filed 4/7/97, effective 4/7/97. Statutory Authority: RCW 49.17.040, [49.17.]050 and [49.17.]060. 96-22-048, § 296-306A-52007, filed 10/31/96, effective 12/1/96.]

WAC 296-307-52009 What must a user consider before choosing a powered industrial truck? Before choosing the industrial truck to use, the user must determine whether the atmosphere or location is hazardous or nonhazardous. The type of industrial truck must be chosen according to the requirements of WAC 296-307-52011.

[Statutory Authority: RCW 49.17.040. 98-24-096, § 296-307-52009, filed 12/1/98, effective 3/1/99. 97-09-013, recodified as § 296-307-52009, filed 4/7/97, effective 4/7/97. Statutory Authority: RCW 49.17.040, [49.17.]050 and [49.17.]060. 96-22-048, § 296-306A-52009, filed 10/31/96, effective 12/1/96.]

WAC 296-307-52011 What requirements determine which trucks to use in specific hazardous environments? Following are the minimum truck types required in specific hazardous environments. You may choose to use industrial trucks having greater safeguards. Tables W-1 and W-2 give specific vehicle usage information by Group and Class.

TABLE W-1
SUMMARY TABLE ON USE OF INDUSTRIAL TRUCKS IN VARIOUS LOCATIONS

CLASSES (Description of classes)	GROUPS (Examples of locations or atmosphere in classes and groups)				DIVISIONS (Nature of hazardous conditions)	
UNCLASSIFIED Locations not possessing atmospheres as described in other columns.	No group designations in Unclassified Piers and wharves inside and outside general storage, general industrial or commercial properties				No divisions in Unclassified	
CLASS I LOCATIONS	A	B	C	D	1	2
Locations in which flammable gases or vapors are, or may be, present in the air in quantities sufficient to produce explosive or ignitible mixtures.	Acetylene	Hydrogen	Ethyl ether	Gasoline Naphtha Alcohols Acetone Lacquer solvent Benzene	Conditions exists continuously, intermittently, or periodically under normal operating conditions.	Condition may occur due to accidentally, for example, due to a puncture of a storage drum.
CLASS II LOCATIONS	E	F	G		1	2
Locations which are hazardous because of the presence of combustible dust.	Metal dust	Carbon black Coal dust Coke dust	Grain dust Flour dust Starch dust Organic dust		Explosive mixture may be present under normal operating conditions, or where failure of equipment may cause the condition to exist simultaneously with arcing or sparking of electrical equipment, or where dusts of an electrically conducting nature may be present.	Explosive mixture not normally present, but where deposits of dust may cause heat rise in electrical equipment, or where such deposits may be ignited by arcs or sparks from electrical equipment.
CLASS III LOCATIONS	Class III has no groups				1	2
Locations where easily ignitible fibers or flyings are present but not likely to be in suspension in quantifies sufficient to produce ignitible mixtures.	Baled waste, cocoa fiber, cotton, excelsior, hemp, istle, jute, kapok, oakum, sisal, Spanish moss, synthetic fibers, tow.				Locations in which easily ignitible fibers or materials producing combustible flyings are handled, manufactured, or used.	Locations in which easily ignitible fibers are stored or handled (except in the process of manufacture).

TABLE W-2
AUTHORIZED USES OF TRUCKS BY TYPES IN GROUPS OF CLASSES AND DIVISIONS

	UN CLASSIFIED	CLASS I								CLASS II						CLASS III	
		DIV I				DIV II				DIV I			DIV II			DIV I	DIV II
Groups in classes	None	A	B	C	D	A	B	C	D	E	F	G	E	F	G	None	None
Type of truck authorized:																	
Diesel:																	
Type D	D**. . .	. . .	. . .	. . .	. . .	. . .	. . .	. . .	. . .	. . .	. . .	. . .	. . .	. . .	. . .	. . .	. . .
Type DS	. . . . .	. . .	. . .	. . .	. . .	. . .	. . .	. . .	DS. . .	. . .	. . .	. . .	. . .	. . .	DS. . .	. . .	DS
Type DY	. . . . .	. . .	. . .	. . .	. . .	. . .	. . .	. . .	DY. . .	. . .	. . .	. . .	. . .	. . .	DY. . .	DY. . .	DY
Electric:																	
Type E	E**. . .	. . .	. . .	. . .	. . .	. . .	. . .	. . .	. . .	. . .	. . .	. . .	. . .	. . .	. . .	. . .	E
Type ES	. . . . .	. . .	. . .	. . .	. . .	. . .	. . .	. . .	ES. . .	. . .	. . .	. . .	. . .	. . .	ES. . .	. . .	ES
Type EE	. . . . .	. . .	. . .	. . .	. . .	. . .	. . .	. . .	EE. . .	. . .	. . .	. . .	. . .	. . .	EE. . .	EE. . .	EE
Type EX.	. . . . .	. . .	. . .	. . .	EX. . .	. . .	. . .	. . .	EX. . .	. . .	EX. . .	EX. .	. . .	. . .	EX. . .	EX. . .	EX
Gasoline:																	
Type G	G**. . .	. . .	. . .	. . .	. . .	. . .	. . .	. . .	. . .	. . .	. . .	. . .	. . .	. . .	. . .	. . .	
Type GS.	. . .	. . .	. . .	. . .	. . .	. . .	. . .	. . .	GS. . .	. . .	. . .	. . .	. . .	. . .	GS . . .	. . .	GS
LP-Gas:																	
Type LP	LP**. . .	. . .	. . .	. . .	. . .	. . .	. . .	. . .	. . .	. . .	. . .	. . .	. . .	. . .	. . .	. . .	LPS
Type LPS	. . .	. . .	. . .	. . .	. . .	. . .	. . .	. . .	LPS. . .	. . .	. . .	. . .	. . .	. . .	LPS. . .	. . .	

**Trucks conforming to these types may also be used.

(1) Powered industrial trucks are prohibited in atmospheres with a hazardous concentration of:

- Acetaldehyde,
- Acetylene,
- Butadiene,
- Cyclopropane,
- Diethyl ether,
- Ethylene,
- Ethylene oxide,
- Hydrogen (or gases or vapors equivalent in hazard to hydrogen, such as manufactured gas),
- Isoprene,

• Propylene oxide, or
• Unsymmetrical dimethyl hydrazine (UDMH).

(a) Only approved EX trucks, or other trucks approved by the manufacturer, may be used in atmospheres containing hazardous concentrations of metal dust, including:

• Aluminum, magnesium, and their commercial alloys;
• Other dusts of similarly hazardous characteristics; or
• In atmospheres containing:
❏ Carbon black,
❏ Coal, or
❏ Coke dust.

(b) In atmospheres where dust of magnesium, aluminum or aluminum bronze may be present, fuses, switches, motor controllers, and circuit breakers of trucks must have enclosures specifically approved for such locations.

(2) Only approved EX trucks, or other trucks approved by the manufacturer, may be used in atmospheres containing

• Acetone,
• Acrylonitrile,
• Alcohol,
• Ammonia,
• Benzine,
• Benzol,
• Butane,
• Ethylene dichloride,
• Gasoline,
• Hexane,
• Lacquer solvent vapors,
• Naphtha,
• Natural gas,
• Propane,
• Propylene,
• Styrene,
• Vinyl acetate,
• Vinyl chloride, or
• Xylenes

in quantities sufficient to produce explosive or ignitable mixtures.

(3) Only approved DY, EE, or EX trucks, or other trucks approved by the manufacturer, may be used in locations where volatile flammable liquids or flammable gases are handled, processed or used, if the hazardous liquids, vapors or gases are normally confined within closed containers or closed systems from which they can escape only in case of accidental rupture or breakdown, or in case of abnormal equipment operation.

Only approved DY, EE, or EX trucks, or other trucks approved by the manufacturer, may also be used in locations in which hazardous concentrations of gases or vapors are normally prevented by mechanical ventilation but that might become hazardous through failure or abnormal operation of the ventilating equipment.

(4) Only approved DS, ES, GS, or LPS trucks, or other trucks approved by the manufacturer, may be used in locations used for the storage of hazardous liquids in sealed containers or liquefied or compressed gases in containers. This classification includes locations where volatile flammable liquids or flammable gases or vapors are used but are hazardous only in case of an accident or an unusual operation condition.

The quantity of hazardous material that might escape in case of accident, the adequacy of ventilating equipment, the total area involved, and the business's history of explosions or fires are all factors that should be considered in determining which truck has sufficient safeguards for the location.

(a) Only approved EX trucks, or other trucks approved by the manufacturer, may be used in atmospheres in which combustible dust is or may be suspended in quantities sufficient to produce explosive or ignitable mixtures, or where mechanical failure or abnormal operation of machinery or equipment might cause such mixtures to be produced.

(b) The EX classification, or other trucks approved by the manufacturer as having equal or greater safeguards, usually includes the working areas of:

• Grain handling and storage plants,
• Rooms containing grinders or pulverizers,
• Cleaners,
• Graders,
• Scalpers,
• Open conveyors or spouts,
• Open bins or hoppers,
• Mixers or blenders,
• Automatic or hopper scales,
• Packing machinery,
• Elevator heads and boots,
• Stock distributors,
• Dust and stock collectors (except all-metal collectors vented to the outside),

and all similar dust producing machinery and equipment in:

❏ Grain processing plants,
❏ Starch plants,
❏ Sugar pulverizing plants,
❏ Malting plants,
❏ Hay grinding plants, and other similar locations; and,
❏ Areas where combustible dust may, under normal operating conditions, be present in the air in quantities sufficient to produce explosive or ignitable mixtures.

(5) Only approved DY, EE, or EX trucks, or other trucks approved by the manufacturer, may be used in atmospheres in which deposits or accumulations of combustible dust may be ignited by arcs or sparks from the truck, if combustible dust will not normally be suspended or thrown into suspension by the normal operation of equipment or apparatus in quantities sufficient to produce explosive or ignitable mixtures.

(6) Only approved DY, EE, or EX trucks, or other trucks approved by the manufacturer, may be used in locations with easily ignitable fibers or flyings if the fibers or flyings are not likely to be suspended in quantities sufficient to produce ignitable mixtures.

(7) Only approved DS, DY, ES, EE, EX, GS, or LPS trucks, or other trucks approved by the manufacturer, may be used in locations, including outside storage, where easily ignitable fibers are stored or handled, but are not processed or manufactured. E trucks that have been previously used in these locations may continue to be used.

(8) If storage warehouses and outside storage locations are hazardous, the specified approved truck, or other truck approved by the manufacturer, must be used. If not classified as hazardous, any approved D, E, G, or LP truck, or other

truck approved by the manufacturer, may be used, or trucks meeting the requirements for these types may be used.

[Statutory Authority: RCW 49.17.010, [49.17].040 and [49.17].050. 00-01-176, § 296-307-52011, filed 12/21/99, effective 3/1/00. Statutory Authority: RCW 49.17.040. 98-24-096, § 296-307-52011, filed 12/1/98, effective 3/1/99.97-09-013, recodified as § 296-307-52011, filed 4/7/97, effective 4/7/97. Statutory Authority: RCW 49.17.040, [49.17.]050 and [49.17.]060. 96-22-048, § 296-306A-52011, filed 10/31/96, effective 12/1/96.]

WAC 296-307-52013 In what environments may converted trucks be used? When powered industrial trucks that were originally approved to use gasoline are converted to use LP-gas according to WAC 296-307-52047(12), they may be used in locations where G, GS or LP, and LPS trucks are specified.

[Statutory Authority: RCW 49.17.040. 98-24-096, § 296-307-52013, filed 12/1/98, effective 3/1/99. 97-09-013, recodified as § 296-307-52013, filed 4/7/97, effective 4/7/97. Statutory Authority: RCW 49.17.040, [49.17.]050 and [49.17.]060. 96-22-048, § 296-306A-52013, filed 10/31/96, effective 12/1/96.]

WAC 296-307-52015 What requirements apply to overhead safety guards? (1) High-lift rider trucks must be fitted with an overhead guard manufactured according to WAC 296-307-52005(1), unless operating conditions do not permit.

(2) An overhead guard must be used as protection against falling objects.

Note: An overhead guard is intended to offer protection from the impact of small packages, boxes, bagged material, and other objects involved in the job, but not to withstand the impact of a falling capacity load.

[Statutory Authority: RCW 49.17.040. 98-24-096, § 296-307-52015, filed 12/1/98, effective 3/1/99. 97-09-013, recodified as § 296-307-52015, filed 4/7/97, effective 4/7/97. Statutory Authority: RCW 49.17.040, [49.17.]050 and [49.17.]060. 96-22-048, § 296-306A-52015, filed 10/31/96, effective 12/1/96.]

WAC 296-307-52017 What requirements apply to load backrests? (1) A load backrest extension must be used whenever necessary to minimize the possibility of the load or part of it from falling rearward.

(2) If the type of load presents a hazard, the user must equip fork trucks with a vertical load backrest extension manufactured according to WAC 296-307-52005(1).

[Statutory Authority: RCW 49.17.040. 98-24-096, § 296-307-52017, filed 12/1/98, effective 3/1/99. 97-09-013, recodified as § 296-307-52017, filed 4/7/97, effective 4/7/97. Statutory Authority: RCW 49.17.040, [49.17.]050 and [49.17.]060. 96-22-048, § 296-306A-52017, filed 10/31/96, effective 12/1/96.]

WAC 296-307-52019 What requirements apply to fuel handling and storage? (1) You must ensure that liquid fuels such as gasoline and diesel fuel are stored and handled according to NFPA Flammable and Combustible Liquids Code (NFPA No. 30-1996).

(2) You must ensure that LP-gas fuel is stored and handled according to NFPA Storage and Handling of Liquefied Petroleum Gases (NFPA No. 58-1998).

[Statutory Authority: RCW 49.17.010, [49.17].040 and [49.17].050. 00-01-176, § 296-307-52019, filed 12/21/99, effective 3/1/00. 97-09-013, recodified as § 296-307-52019, filed 4/7/97, effective 4/7/97. Statutory Authority: RCW 49.17.040, [49.17.]050 and [49.17.]060. 96-22-048, § 296-306A-52019, filed 10/31/96, effective 12/1/96.]

WAC 296-307-52021 What requirements apply to lighting for operating areas? (1) Adequate lighting should be provided in operating areas. (See ANSI Practice for Industrial Lighting, ANSI/IES RP-7 1990.)

(2) Where general lighting is inadequate, directional lighting must be provided on the truck.

[Statutory Authority: RCW 49.17.010, [49.17].040 and [49.17].050. 00-01-176, § 296-307-52021, filed 12/21/99, effective 3/1/00. 97-09-013, recodified as § 296-307-52021, filed 4/7/97, effective 4/7/97. Statutory Authority: RCW 49.17.040, [49.17.]050 and [49.17.]060. 96-22-048, § 296-306A-52021, filed 10/31/96, effective 12/1/96.]

WAC 296-307-52023 What level of carbon monoxide gas is allowed? Concentration levels of carbon monoxide gas created by truck operations must not exceed the levels specified in WAC 296-62-075, Part L (general occupational health standards).

Note: Questions concerning degree of concentration and methods of sampling should be referred to a qualified industrial hygienist.

[Statutory Authority: RCW 49.17.010, [49.17].040 and [49.17].050. 00-01-176, § 296-307-52023, filed 12/21/99, effective 3/1/00. 97-09-013, recodified as § 296-307-52023, filed 4/7/97, effective 4/7/97. Statutory Authority: RCW 49.17.040, [49.17.]050 and [49.17.]060. 96-22-048, § 296-306A-52023, filed 10/31/96, effective 12/1/96.]

WAC 296-307-52025 What requirements apply to dockboards (bridge plates)? (1) Portable and powered dockboards must be strong enough to support the load carried on them.

(2) Portable dockboards must be secured in position, either by anchors or anti-slipping devices.

(3) Powered dockboards must meet the design and construction requirements of Commercial Standard CS202-56 (1956) "Industrial Lifts and Hinged Loading Ramps" published by the U.S. Department of Commerce.

(4) Dockboard or bridge plates must be driven over carefully and slowly and their rated capacity never exceeded.

(5) Portable dockboards must have handholds for safe handling.

(6) Railroad cars must be kept stationary while dockboards or bridge plates are in position.

[97-09-013, recodified as § 296-307-52025, filed 4/7/97, effective 4/7/97. Statutory Authority: RCW 49.17.040, [49.17.]050 and [49.17.]060. 96-22-048, § 296-306A-52025, filed 10/31/96, effective 12/1/96.]

WAC 296-307-52027 What rules apply to loading trucks, trailers, and railroad cars with powered industrial trucks? (1) Wheel stops or other positive protection must be provided to prevent railroad cars from moving during loading or unloading.

(2) Fixed jacks may be necessary to support a semi-trailer and prevent up-ending during loading or unloading if the trailer is not coupled to a tractor.

(3) Many truck-trailers are equipped with a rear-end protection device to prevent cars from wedging underneath during a collision. These protection devices must be used with equipment that secures the truck-trailer to the loading dock. Wheel chocks are not required under the following conditions:

(a) Trucks or trailers are secured to the loading dock with a mechanical system that prevents movement away from the dock during loading, unloading, and boarding.

(b) All of the mechanical equipment is installed, maintained, and used as recommended by the manufacturer.

(c) Any damaged mechanical equipment is removed from service immediately and is not used to secure trucks and trailers.

(4) The flooring of trucks, trailers, and railroad cars must be checked for breaks and weakness before use.

[97-09-013, recodified as § 296-307-52027, filed 4/7/97, effective 4/7/97. Statutory Authority: RCW 49.17.040, [49.17.]050 and [49.17.]060. 96-22-048, § 296-306A-52027, filed 10/31/96, effective 12/1/96.]

WAC 296-307-52029 What are the operator training requirements for powered industrial trucks? (1) **Safe operation.**

(a) The employer must ensure that each powered industrial truck operator is trained in the safe operation of a powered industrial truck, and is competent to operate a powered industrial truck safely.

(b) Prior to permitting an employee to operate a powered industrial truck (except for training purposes), the employer must ensure that each operator has successfully completed the training required by this section.

(2) **Training program implementation.**

(a) Trainees may operate a powered industrial truck only under the direct supervision of persons who have the knowledge, training, and experience to train operators and where such operation does not endanger the trainee or other employees.

Note: The employer, or any other qualified person of the employer's choosing, may give required training and evaluation.

(b) Training must consist of formal instruction and/or practical training, conveyed in a manner that the trainee understands.

Note: Formal instruction may include lecture, discussion, interactive computer learning, video tape and/or written material. Practical training may include demonstrations performed by the trainer and practical exercises performed by the trainee.

(3) **Training program content.** Powered industrial truck operators must receive initial training in the topics that follow, except in topics that the employer can demonstrate are not applicable to safe operation of the truck in the employer's workplace.

(a) Truck-related topics:

• Operating instructions, warnings and precautions for the types of truck the operator will be authorized to operate;

• Differences between the truck and the automobile;

• Truck controls and instrumentation: Where they are located, what they do, and how they work;

• Engine or motor operation;

• Steering and maneuvering;

• Visibility (including restrictions due to loading);

• Fork and attachment adaption, operation, and use limitations;

• Vehicle capacity;

• Vehicle stability;

• Any vehicle inspection and maintenance that the operator will be required to perform;

• Refueling and/or charging and recharging of batteries;

• Operating limitations;

• Any other operating instructions, warnings, or precautions listed in the operator's manual for the types of vehicle that the employee is being trained to operate.

(b) Workplace-related topics:

• Surface conditions where the vehicle will be operated;

• Composition of loads to be carried and load stability;

• Load manipulation, stacking, and unstacking;

• Pedestrian traffic in areas where the vehicle will be operated;

• Narrow aisles and other restricted places where the vehicle will be operated;

• Hazardous (classified) locations where the vehicle will be operated;

• Ramps and other sloped surfaces that could affect the vehicle's stability;

• Closed environments and other areas where insufficient ventilation or poor vehicle maintenance could cause a buildup of carbon monoxide or diesel exhaust;

• Other unique or potentially hazardous environmental conditions in the workplace that could affect safe operation.

(4) **Retraining.**

(a) Retraining in relevant topics must be provided to the operator when:

• The operator has been observed to operate the vehicle in an unsafe manner;

• The operator has been involved in an accident or near-miss incident;

• The operator has received an evaluation that reveals that the operator is not operating the truck safely;

• The operator is assigned to drive a different type of truck; or

• The condition in the workplace changes in a manner that could affect safe operation of the truck.

(b) Retraining must be provided to an operator if three years has elapsed since he or she last received training.

(5) **Avoidance of duplicative training.** If an operator has previously received training in a topic specified in subsection (3) of this section, and such training is appropriate to the truck and working conditions encountered, additional training in that topic is not required if the operator can provide proof of such training within three years, and the employer can verify operator competency.

(6) **Recordkeeping.** Employers must keep records showing that each operator has been trained or received retraining as required by this section. These records must include the name of the operator, the date of the training or retraining, and the name of the person(s) giving the training or retraining.

(7) **Implementation dates.** The employer must ensure that operators of powered industrial trucks are trained, as appropriate, by the effective date of this section. Employees hired on or after the effective date of this section must be trained and found competent prior to being assigned to operate a powered industrial truck.

(8) **Nonmandatory guidance.** To assist employers in implementing operator training requirements, a nonmandatory appendix has been added as WAC 296-307-52030. This

appendix does not add to, alter, or reduce the requirements of this section.

[Statutory Authority: RCW 49.17.010, [49.17].040 and [49.17].050. 00-01-176, § 296-307-52029, filed 12/21/99, effective 3/1/00. 97-09-013, recodified as § 296-307-52029, filed 4/7/97, effective 4/7/97. Statutory Authority: RCW 49.17.040, [49.17.]050 and [49.17.]060. 96-22-048, § 296-306A-52029, filed 10/31/96, effective 12/1/96.]

WAC 296-307-52030 Is there any additional (non-mandatory) information that may assist me with powered industrial truck operator training? (1) **Definitions.** The following definitions may help to explain the principle of stability:

"Center of gravity" means the point on an object at which all of the object's weight is concentrated. For symmetrical loads, the center of gravity is at the middle of the load.

"Counterweight" means the weight that is built into the truck's basic structure and is used to offset the load's weight and to maximize the vehicle's resistance to tipping over.

"Fulcrum" means the truck's axis of rotation when it tips over.

"Grade" means the slope of a surface, which is usually measured as the number of feet of rise or fall over a hundred foot horizontal distance (the slope is expressed as a percent).

"Lateral stability" means a truck's resistance to overturning sideways.

"Line of action" means an imaginary vertical line through an object's center of gravity.

"Load center" means the horizontal distance from the load's edge (or the fork's or other attachment's vertical face) to the line of action through the load's center of gravity.

"Longitudinal stability" means the truck's resistance to overturning forward or rearward.

"Moment" means the product of the object's weight times the distance from a fixed point (usually the fulcrum). In the case of a powered industrial truck, the distance is measured from the point at which the truck will tip over to the object's line of action. The distance is always measured perpendicular to the line of action.

"Track" means the distance between the wheels on the same axle of the truck.

"Wheelbase" means the distance between the centerline of the vehicle's front and rear wheels.

(2) **General.**

(a) Determining the stability of a powered industrial truck is simple once a few basic principles are understood. There are many factors that contribute to a vehicle's stability: The vehicle's wheelbase, track, and height; the load's weight distribution; and the vehicle's counterweight location (if the vehicle is so equipped).

(b) The "stability triangle," used in most stability discussions, demonstrates stability simply (see Figures 1 and 2).

(3) **Basic principles.**

(a) Whether an object is stable depends on the object's "moment" (see definitions, this section) at one end of a system being greater than, equal to, or smaller than the object's moment at the system's other end. This principle can be seen in the way a seesaw or teeter-totter works: That is, if the product of the load and distance from the fulcrum (moment) is equal to the moment at the device's other end, the device is balanced and it will not move. However, if there is a greater moment at one end of the device, the device will try to move downward at the end with the greater moment.

(b) The longitudinal stability of a counterbalanced powered industrial truck depends on the vehicle's moment and the load's moment. In other words, if the mathematic product of the load-moment (the distance from the front wheels, the approximate point at which the vehicle would tip forward) to the load's center of gravity times the load's weight is less than the vehicle's moment, the system is balanced and will not tip forward. However, if the load's moment is greater than the vehicle's moment, the greater load-moment will force the truck to tip forward.

(4) **The stability triangle.**

(a) Almost all counterbalanced powered industrial trucks have a three-point suspension system, that is, the vehicle is supported at three points. This is true even if the vehicle has four wheels. The truck's steer axle is attached to the truck by a pivot pin in the axle's center. When the points are connected with imaginary lines, this three-point support forms a triangle called the stability triangle. Figure 1 depicts the stability triangle.

Figure 1

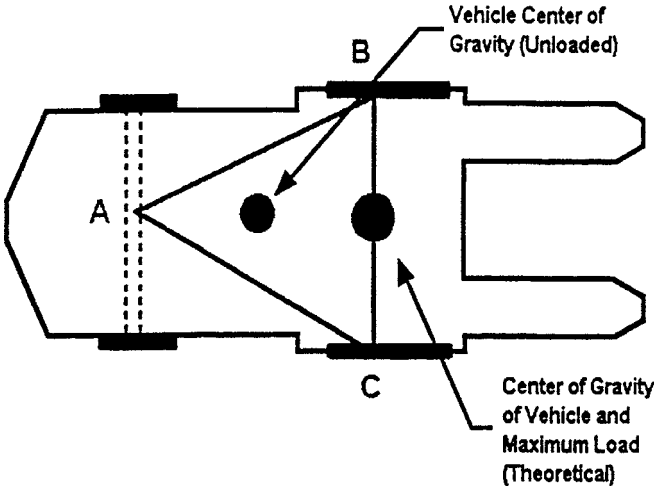

Notes: 1. When the vehicle is loaded, the combined center of gravity shifts toward line B-C. Theoretically, the maximum load will result in the center of gravity at the line B-C. In actual practice, the combined center of gravity should never be at line B-C.

2. The addition of additional counterweight will cause the truck center of gravity to shift toward point A and result in a truck that is less stable laterally.

(b) When the vehicle's line of action, or load center, falls within the stability triangle, the vehicle is stable and will not tip over. However, when the vehicle's line of action or the vehicle/load combination falls outside the stability triangle, the vehicle is unstable and may tip over.

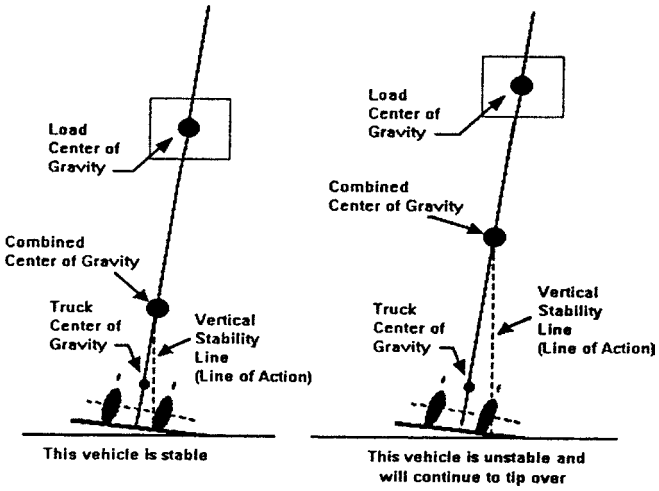

Figure 2

(5) **Longitudinal stability.**

(a) The axis of rotation when a truck tips forward is the front wheels' points of contact with the pavement. When a powered industrial truck tips forward, the truck will rotate about this line. When a truck is stable, the vehicle-moment must exceed the load-moment. As long as the vehicle-moment is equal to or exceeds the load-moment, the vehicle will not tip over. On the other hand, if the load-moment slightly exceeds the vehicle-moment, the truck will begin to tip forward, thereby causing the rear to lose contact with the floor or ground and resulting in loss of steering control. If the load-moment greatly exceeds the vehicle-moment, the truck will tip forward.

(b) To determine the maximum safe load-moment, the truck manufacturer normally rates the truck at a maximum load at a given distance from the front face of the forks. The specified distance from the front face of the forks to the line of action of the load is commonly called the load center. Because larger trucks normally handle loads that are physically larger, these vehicles have greater load centers. Trucks with a capacity of 30,000 pounds or less are normally rated at a given load weight at a 24-inch load center. Trucks with a capacity greater than 30,000 pounds are normally rated at a given load weight at a 36-or 48-inch load center. To safely operate the vehicle, the operator should always check the data plate to determine the maximum allowable weight at the rated load center.

(c) Although the true load-moment distance is measured from the front wheels, this distance is greater than the distance from the front face of the forks. Calculating the maximum allowable load-moment using the load-center distance always provides a lower load-moment than the truck was designed to handle. When handling unusual loads, such as those that are larger than 48 inches long (the center of gravity is greater than 24 inches) or that have an offset center of gravity, etc., a maximum allowable load-moment should be calculated and used to determine whether a load can be safely handled. For example, if an operator is operating a 3,000-pound capacity truck (with a 24-inch load center), the maximum allowable load-moment is 72,000 inch-pounds (3,000 times 24). If a load is 60 inches long (30-inch load center), then the maximum that this load can weigh is 2,400 pounds (72,000 divided by 30).

(6) **Lateral stability.**

(a) The vehicle's lateral stability is determined by the line of action's position (a vertical line that passes through the combined vehicle's and load's center of gravity) relative to the stability triangle. When the vehicle is not loaded, the truck's center of gravity location is the only factor to be considered in determining the truck's stability. As long as the line of action of the combined vehicle's and load's center of gravity falls within the stability triangle, the truck is stable and will not tip over. However, if the line of action falls outside the stability triangle, the truck is not stable and may tip over. Refer to Figure 3.

(b) Factors that affect the vehicle's lateral stability include the load's placement on the truck, the height of the load above the surface on which the vehicle is operating, and the vehicle's degree of lean.

(7) **Dynamic stability.**

(a) Up to this point, the stability of a powered industrial truck has been discussed without considering the dynamic forces that result when the vehicle and load are put into motion. The weight's transfer and the resultant shift in the center of gravity due to the dynamic forces created when the machine is moving, braking, cornering, lifting, tilting, and lowering loads, etc., are important stability considerations.

(b) When determining whether a load can be safely handled, the operator should exercise extra caution when handling loads that cause the vehicle to approach its maximum design characteristics. For example, if an operator must handle a maximum load, the load should be carried at the lowest position possible, the truck should be accelerated slowly and evenly, and the forks should be tilted forward cautiously. However, no precise rules can be formulated to cover all of these eventualities.

[Statutory Authority: RCW 49.17.010, [49.17].040 and [49.17].050. 00-01-176, § 296-307-52030, filed 12/21/99, effective 3/1/00.]

WAC 296-307-52031 What requirements apply to operating powered industrial trucks? (1) No operator may drive a truck up to anyone standing in front of a fixed object.

(2) No one may stand or pass under the elevated portion of any truck, whether loaded or empty.

(3) Employers must not allow people to ride on powered industrial trucks unless a safe place to ride is provided.

(4) Employers must prohibit employees from placing any body parts between the uprights of the mast or outside the running lines of the truck.

(5) When an operator leaves a powered industrial truck unattended:

(a) The load must be fully lowered;

(b) The controls must be neutralized;

(c) The power must be shut off; and

(d) The brakes must be set.

(e) If the truck is parked on an incline, the wheels must be blocked.

A powered industrial truck is "unattended" when the operator is 25 feet or more away from the vehicle, which remains in view, or whenever the operator leaves the vehicle and it is not in view.

(6) When a truck operator is dismounted, within 25 feet of the truck, and still in view, the load must be fully lowered, the controls must be neutralized, and the brakes must be set to prevent movement.

(7) The operator must maintain a safe distance from the edge of ramps or platforms while operating on any elevated dock, or platform or freight car.

(8) There must be enough headroom for trucks to operate under overhead installations, lights, pipes, sprinkler systems, or other overhead projections.

(9) An active operator protection restraint device (such as a seatbelt or lap-bar) or system must be used, when provided.

[Statutory Authority: RCW 49.17.010, [49.17].040 and [49.17].050. 00-01-176, § 296-307-52031, filed 12/21/99, effective 3/1/00. 97-09-013, recodified as § 296-307-52031, filed 4/7/97, effective 4/7/97. Statutory Authority: RCW 49.17.040, [49.17.]050 and [49.17.]060. 96-22-048, § 296-306A-52031, filed 10/31/96, effective 12/1/96.]

WAC 296-307-52033 When may trucks be used to open or close freight car doors? Trucks may only be used for opening or closing freight car doors with an approved device that meets the following requirements:

(1) The door opening or closing device requires that the force applied by the device to the door is parallel to the door travel.

(2) The truck operator is trained in the use of the door opening or closing device and keeps the operation in full view while opening and closing.

(3) The area is clear of people while the door is moved with a device.

[97-09-013, recodified as § 296-307-52033, filed 4/7/97, effective 4/7/97. Statutory Authority: RCW 49.17.040, [49.17.]050 and [49.17.]060. 96-22-048, § 296-306A-52033, filed 10/31/96, effective 12/1/96.]

WAC 296-307-52035 What requirements apply to lifting employees on the forks of trucks? Employees may be lifted on the lifting carriage or forks of a powered industrial truck under the following conditions:

(1) The truck is equipped with vertical only, or vertical and horizontal controls elevatable with the lifting carriage or forks.

(2) A safety platform is firmly secured to the lifting carriage and/or forks.

(3) Employees on the platform have a mechanism to shut off power to the truck.

(4) Employees on the platform are protected from falling objects according to the operating conditions.

[97-09-013, recodified as § 296-307-52035, filed 4/7/97, effective 4/7/97. Statutory Authority: RCW 49.17.040, [49.17.]050 and [49.17.]060. 96-22-048, § 296-306A-52035, filed 10/31/96, effective 12/1/96.]

WAC 296-307-52037 What requirements apply to using platforms for hoisting employees? A platform built specifically for hoisting people may be used to lift employees when:

(1) The platform is securely attached to the forks and has standard guardrails and toeboards installed on all sides.

(2) The hydraulic system is designed so that the lift mechanism will not drop faster than 135 feet per minute in the event of a failure in any part of the system. Forklifts used for elevating work platforms are identified as meeting this requirement.

(3) A safety strap is installed or the control lever is locked to prevent the boom from tilting.

(4) An operator attends the lift equipment while employees are on the platform.

(5) The operator is in the normal operating position while raising or lowering the platform.

(6) The vehicle remains stationary while employees are on the platform.

Exception: Inching or maneuvering at very slow speed is permissible.

(7) The area between employees on the platform and the mast is adequately guarded to prevent contact with chains or other shear points.

[97-09-013, recodified as § 296-307-52037, filed 4/7/97, effective 4/7/97. Statutory Authority: RCW 49.17.040, [49.17.]050 and [49.17.]060. 96-22-048, § 296-306A-52037, filed 10/31/96, effective 12/1/96.]

WAC 296-307-52039 What requirements apply to traveling in a powered industrial truck? (1) The operator must maintain a safe distance of approximately three truck lengths from the truck ahead. The truck must be kept under control at all times.

(2) The operator must yield the right of way to ambulances, fire trucks, or other vehicles in emergency situations.

(3) Passing other trucks traveling in the same direction at intersections, blind spots, or other dangerous locations is prohibited.

(4) Railroad tracks must be crossed diagonally wherever possible. The operator must not park closer than 8 feet from the center of railroad tracks.

(5) The operator must look in the direction of, and keep a clear view of, the path of travel.

(6) Stunt driving and horseplay are prohibited.

(7) The operator must approach elevators slowly, and then enter squarely after the elevator car is properly leveled. Once on the elevator, the operator must neutralize controls, shut off power, and set the brakes.

(8) Motorized hand trucks must enter elevator or other confined areas with load end forward.

(9) The operator must avoid running over loose objects on the roadway surface.

(10) Access to fire aisles, stairways, and fire equipment must be kept clear.

[Statutory Authority: RCW 49.17.010, [49.17].040 and [49.17].050. 00-01-176, § 296-307-52039, filed 12/21/99, effective 3/1/00. 97-09-013, recodified as § 296-307-52039, filed 4/7/97, effective 4/7/97. Statutory Authority: RCW 49.17.040, [49.17.]050 and [49.17.]060. 96-22-048, § 296-306A-52039, filed 10/31/96, effective 12/1/96.]

WAC 296-307-52041 What requirements apply to traveling speeds of powered industrial trucks? (1) The operator must observe all traffic regulations, including authorized plant speed limits.

(2) The operator must slow down and sound the horn at cross aisles and other locations where vision is obstructed. If the load obstructs a forward view, the driver must travel with the load trailing.

Exception: If traveling with the load trailing creates new hazards, it is not required.

(3) The operator must ascend and descend grades slowly.

(a) At grades over 10 percent, loaded trucks must be driven with the load upgrade.

(b) Unloaded trucks should be operated on all grades with the load carrier downgrade.

(c) On all grades the load and load carrier must be tilted back if applicable, and raised only as far as necessary to clear the road surface.

(4) Under all travel conditions, the truck must be operated at a speed that will permit it to be stopped safely.

(5) The driver must slow down for wet and slippery floors.

(6) While negotiating turns, the operator must slow to a safe speed and turn the wheel in a smooth, sweeping motion.

[97-09-013, recodified as § 296-307-52041, filed 4/7/97, effective 4/7/97. Statutory Authority: RCW 49.17.040, [49.17.]050 and [49.17.]060. 96-22-048, § 296-306A-52041, filed 10/31/96, effective 12/1/96.]

WAC 296-307-52043 What requirements apply to loading powered industrial trucks? (1) All loads must be stable or safely arranged. Exercise caution when handling off-center loads that cannot be centered.

(2) All loads must be within the rated capacity of the truck.

(3) Take care securing, manipulating, positioning, and transporting loads when attachments are used. Trucks with attachments must be operated as partially loaded trucks when not handling a load.

(4) Place the load carrier under the load as far as possible. Tilt the mast backward to stabilize the load.

(5) Use extreme care when tilting the load forward or backward, particularly when high tiering. Avoid tilting the load forward with the load carrier elevated except to pick up a load, or when the load is in a deposit position over a rack or stack. When stacking or tiering, use only enough backward tilt to stabilize the load.

[97-09-013, recodified as § 296-307-52043, filed 4/7/97, effective 4/7/97. Statutory Authority: RCW 49.17.040, [49.17.]050 and [49.17.]060. 96-22-048, § 296-306A-52043, filed 10/31/96, effective 12/1/96.]

WAC 296-307-52045 What requirements apply to servicing powered industrial trucks? (1) Powered industrial trucks that need repairs, are defective, or in any way unsafe must be taken out of service until restored to safe operating condition.

(2) Stop the engine before filling fuel tanks. Avoid spilling fuel.

(3) When oil or fuel spills, wash the spill away carefully or evaporate the spill completely and replace the fuel tank cap before restarting engine.

(4) No truck may be operated with a leak in the fuel system.

(5) Open flames are prohibited for checking electrolyte level in storage batteries or gasoline level in fuel tanks.

[97-09-013, recodified as § 296-307-52045, filed 4/7/97, effective 4/7/97. Statutory Authority: RCW 49.17.040, [49.17.]050 and [49.17.]060. 96-22-048, § 296-306A-52045, filed 10/31/96, effective 12/1/96.]

WAC 296-307-52047 What requirements apply to maintaining powered industrial trucks? (1) Powered industrial trucks must be removed from service when not in safe operating condition. All repairs must be made by an authorized employee.

(2) No repairs may be made in Class I, II, and III locations.

(3) When repairs to fuel and ignition systems of industrial trucks involve fire hazards, the repairs must be conducted only in designated locations.

(4) Trucks in need of repairs to the electrical system must have the battery disconnected prior to repair.

(5) Industrial truck parts must be replaced only by parts of equivalent safety.

(6) Industrial trucks must not be altered so that the relative positions of parts are different from when they were manufactured. Industrial trucks must not have parts added or eliminated, except as provided in WAC 296-307-52005. Fork trucks must not have additional counterweighting added unless approved by the truck manufacturer.

(7) Industrial trucks must be examined at least daily before being placed in service. Industrial trucks must not be placed in service if the examination shows any unsafe condition.

Where industrial trucks are used on a round-the-clock basis, they shall be examined after each shift. Defects must be immediately reported and corrected.

(8) Water mufflers must be filled daily or as frequently as necessary to prevent the water supply from dropping below 75 percent. Vehicles must not be operated if muffler screens or other parts are clogged. Any vehicle that emits hazardous sparks or flames from the exhaust system must immediately be removed from service until the emission of such sparks and flames has been eliminated.

(9) When the temperature of any part of any truck exceeds its normal operating temperature, the vehicle must be removed from service until the cause for overheating has been eliminated.

(10) Industrial trucks must be kept clean and free of excess accumulations of combustible materials, oil, and grease. Noncombustible agents should be used for cleaning trucks. Low flash point (below 100°F) solvents must not be used. High flash point (at or above 100°F) solvents may be used. Take precautions regarding toxicity, ventilation, and fire hazard according to the agent or solvent used.

(11) Industrial trucks originally approved to use gasoline fuel may be converted to use LP-gas fuel if the converted truck has the features specified for LP or LPS designated trucks. The converted equipment must be approved. You may find a description of the conversion system and the recommended method of installation in the "listed by report" of a nationally recognized testing laboratory.

[Statutory Authority: RCW 49.17.010, [49.17].040 and [49.17].050. 00-01-176, § 296-307-52047, filed 12/21/99, effective 3/1/00. Statutory Authority: RCW 49.17.040. 98-24-096, § 296-307-52047, filed 12/1/98, effective 3/1/99. 97-09-013, recodified as § 296-307-52047, filed 4/7/97, effective 4/7/97. Statutory Authority: RCW 49.17.040, [49.17.]050 and [49.17.]060. 96-22-048, § 296-306A-52047, filed 10/31/96, effective 12/1/96.]

Part X
Rim Wheel Servicing

WAC 296-307-530 Rim wheel servicing.

[97-09-013, recodified as § 296-307-530, filed 4/7/97, effective 4/7/97. Statutory Authority: RCW 49.17.040, [49.17.]050 and [49.17.]060. 96-22-048, § 296-306A-530, filed 10/31/96, effective 12/1/96.]

WAC 296-307-53001 What does this section cover? WAC 296-307-530 applies to the servicing of multipiece and single-piece rim wheels used on large vehicles such as trucks, tractors, trailers, buses and off-road machines. It does not apply to servicing rim wheels used on automobiles, or on pickup trucks and vans with automobile tires or truck tires designated "LT."

[Statutory Authority: RCW 49.17.040. 98-24-096, § 296-307-53001, filed 12/1/98, effective 3/1/99. 97-09-013, recodified as § 296-307-53001, filed 4/7/97, effective 4/7/97. Statutory Authority: RCW 49.17.040, [49.17.]050 and [49.17.]060. 96-22-048, § 296-306A-53001, filed 10/31/96, effective 12/1/96.]

WAC 296-307-53003 What definitions apply to rim wheel servicing? "Barrier" means a fence, wall, or structure placed between a single-piece rim wheel and an employee during tire inflation, to contain the rim wheel components in the event of the sudden release of the contained air of the single-piece rim wheel.

"Charts" means the United States Department of Labor, Occupational Safety and Health Administration (OSHA) publications entitled "Demounting and Mounting Procedures for Truck/Bus Tires" and "Multi-Piece Rim Matching Chart," the National Highway Traffic Safety Administration (NHTSA) publications entitled "Demounting and Mounting Procedures for Truck/Bus Tires" and "Multi-Piece Rim Matching Chart," or any other poster that contains at least the same instructions, safety precautions and other information contained in the charts that is applicable to the types of wheels being serviced.

"Installing a rim wheel" means the transfer and attachment of an assembled rim wheel onto a vehicle axle hub. "Removing" means the opposite of installing.

"Mounting a tire" means the assembly or putting together of the wheel and tire components to form a rim wheel, including inflation. "Demounting" means the opposite of mounting.

"Multipiece rim wheel" means the assembly of a multipiece wheel with the tire tube and other components.

"Multipiece wheel" means a vehicle wheel consisting of two or more parts, one of which is a side or locking ring designed to hold the tire on the wheel by interlocking components, when the tire is inflated.

"Restraining device" means a cage, rack, assembly of bars, or other components that will constrain all rim wheel components during an explosive separation of a multipiece rim wheel, or during the sudden release of the contained air of a single-piece rim wheel.

"Rim manual" means a publication containing instructions from the manufacturer or other qualified organization for correct mounting, demounting, maintenance, and safety precautions peculiar to the type of wheel being serviced.

"Rim wheel" means an assembly of tire, tube and liner (where appropriate), and wheel components.

"Service" or "servicing" means the mounting and demounting of rim wheels, and related activities such as inflating, deflating, installing, removing, and handling.

"Service area" means that part of an employer's premises used for the servicing of rim wheels, or any other place where an employee services rim wheels.

"Single-piece rim wheel" means the assembly of single-piece rim wheel with the tire and other components.

"Single-piece wheel" means a vehicle wheel consisting of one part, designed to hold the tire on the wheel when the tire is inflated.

"Trajectory" means:

- Any potential path that a rim wheel component may travel during an explosive separation, or the sudden release of the pressurized air; or
- An area at which an air blast from a single-piece rim wheel may be released.

The trajectory may deviate from paths that are perpendicular to the assembled position of the rim wheel. (See Figure for examples of trajectories.)

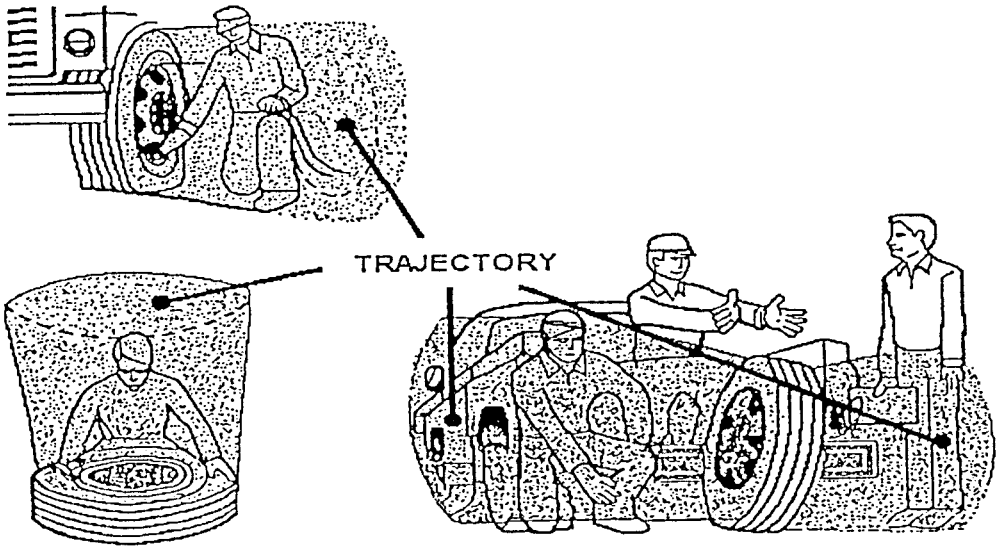

"Wheel" means the part of a rim wheel that provides the method of attachment of the assembly to the axle of a vehicle and also provides the means to contain the inflated portion of the assembly (i.e., the tire and/or tube).

[97-09-013, recodified as § 296-307-53003, filed 4/7/97, effective 4/7/97. Statutory Authority: RCW 49.17.040, [49.17.]050 and [49.17.]060. 96-22-048, § 296-306A-53003, filed 10/31/96, effective 12/1/96.]

WAC 296-307-53005 What training must an employer provide for employees who service rim wheels? (1) You must implement a training program that covers at least the following:

(a) The hazards involved in servicing rim wheels;

(b) The safe operating procedures for the types of wheel serviced, described in WAC 296-307-53013 and 296-307-53015; and

(c) The applicable data contained in the charts (rim manuals) and the contents of this standard.

(2) You must ensure that each employee demonstrates and maintains the ability to service rim wheels safely, including the following:

(a) Demounting tires (including deflation);

(b) Inspecting and identifying the rim wheel components;

(c) Mounting tires (including inflation with a restraining device or other safeguard required by this section);

(d) Using the restraining device and other equipment required by this section;

(e) Handling rim wheels;

(f) Inflating the tire when a single-piece rim wheel is mounted on a vehicle;

(g) Understanding the necessity of standing outside the trajectory both during inflation of the tire and during inspection of the rim wheel following inflation; and

(h) Installing and removing rim wheels.

(3) If you believe that any employee is unable to read and understand the charts or rim manual, you must instruct the employee in the contents of the charts and rim manual in a manner that the employee can understand.

(4) You must evaluate each employee's ability to perform these tasks safely, and provide additional training as necessary to ensure that each employee maintains proficiency.

[Statutory Authority: RCW 49.17.040. 98-24-096, § 296-307-53005, filed 12/1/98, effective 3/1/99. 97-09-013, recodified as § 296-307-53005, filed 4/7/97, effective 4/7/97. Statutory Authority: RCW 49.17.040, [49.17.]050 and [49.17.]060. 96-22-048, § 296-306A-53005, filed 10/31/96, effective 12/1/96.]

WAC 296-307-53007 What requirements apply to restraining devices? (1) You must furnish a restraining device for inflating tires on multipiece wheels.

(2) You must provide a restraining device for inflating tires on single-piece wheels unless the rim wheel will be bolted onto a vehicle during inflation.

(3) Restraining devices must:

(a) Withstand the force of a rim wheel separation occurring at 150% of the maximum tire pressure for the rim wheel being serviced.

(b) Prevent the rim wheel components from being thrown out of the device.

(c) The restraining device is visually inspected before each day's use and after any rim wheel separation or sudden release of contained air. Any damaged restraining device is immediately removed from service.

(d) If the restraining device is removed from service, it is not returned to service until repaired and reinspected. If the restraining device requires structural repair, it is not returned to service until certified by either the manufacturer or a registered professional engineer to meet the strength requirements of (a) of this subsection.

[97-09-013, recodified as § 296-307-53009, filed 4/7/97, effective 4/7/97. Statutory Authority: RCW 49.17.040, [49.17.]050 and [49.17.]060. 96-22-048, § 296-306A-53007, filed 10/31/96, effective 12/1/96.]

WAC 296-307-53009 What other equipment must an employer provide for rim wheel servicing? (1) You must furnish an air line assembly and ensure that employees use it for inflating tire.

(2) The air line assembly must contain the following components:

(a) A clip-on chuck;

(b) An in-line valve with a pressure gauge or a presettable regulator; and

(c) Enough hose between the clip-on chuck and the in-line valve (if one is used) to allow the employee to stand outside the trajectory.

(3) Current charts or rim manuals for the types of wheels being serviced shall be available in the service area.

(4) You must furnish the tools recommended in the rim manual for the type of wheel being serviced and ensure that they are the only tools used to service rim wheels.

[97-09-013, recodified as § 296-307-53009, filed 4/7/97, effective 4/7/97. Statutory Authority: RCW 49.17.040, [49.17.]050 and [49.17.]060. 96-22-048, § 296-306A-53009, filed 10/31/96, effective 12/1/96.]

WAC 296-307-53011 What requirements apply to wheel component assembly? (1) You must ensure that multipiece wheel components are not interchanged except as provided in the charts or rim manual.

(2) Multipiece wheel components and single-piece wheels must be inspected prior to assembly. Any wheel or wheel component that is bent out of shape, pitted from corrosion, broken, or cracked shall not be used. Mark damaged wheels or components "unserviceable" and remove from the service area. Replace damaged or leaky valves.

(3) Rim flanges, rim gutters, rings, bead seating surfaces and the bead areas of tires must be free of any dirt, surface rust, scale or loose or flaked rubber build-up prior to mounting and inflation.

(4) The size (bead diameter and tire/wheel widths) and type of both the tire and the wheel must be checked for compatibility before assembly.

[97-09-013, recodified as § 296-307-53011, filed 4/7/97, effective 4/7/97. Statutory Authority: RCW 49.17.040, [49.17.]050 and [49.17.]060. 96-22-048, § 296-306A-53011, filed 10/31/96, effective 12/1/96.]

WAC 296-307-53013 What are the safe operating procedures for servicing multipiece rim wheels? You must establish safe operating procedures for servicing multipiece rim wheels, and ensure that employees are instructed in and

follow the procedures. Your procedures must include at least the following:

(1) Before demounting, remove the valve core to completely deflate the tire.

(2) Remove the valve core to completely deflate the tire before removing a rim wheel from the axle whenever:

(a) The tire has been driven on underinflated at eighty percent or less of its recommended pressure; or

(b) There is obvious or suspected damage to the tire or wheel components.

(3) Apply rubber lubricant to bead and rim mating surfaces during wheel assembly and tire inflation, unless the tire or wheel manufacturer recommends against it.

(4) A tire on a vehicle underinflated at more than eighty percent of the recommended pressure may be inflated while the rim wheel is on the vehicle, only if remote control inflation equipment is used and no employees remain in the trajectory during inflation.

(5) Tires may be inflated outside a restraining device only to pressure sufficient to force the tire bead onto the rim ledge and to create an airtight seal with the tire and bead.

(6) Whenever a rim wheel is in a restraining device, the employee must not rest any part of the body or equipment on the restraining device.

(7) After tire inflation, inspect the tire and wheel components while still within the restraining device. Ensure that they are properly seated and locked. If further adjustment to the tire or wheel components is necessary, deflate the tire by removing the valve core before making adjustments.

(8) Never correct the seating of side and lock rings by hammering, striking, or forcing the components while the tire is pressurized.

(9) Cracked, broken, bent, or otherwise damaged rim components shall not be reworked, welded, brazed, or otherwise heated.

(10) When handling multipiece rim wheels, employees must stay out of the trajectory unless the performance of the servicing makes the employee's presence in the trajectory necessary.

(11) Do not apply heat to a multipiece wheel or wheel component.

[97-09-013, recodified as § 296-307-53015, filed 4/7/97, effective 4/7/97. Statutory Authority: RCW 49.17.040, [49.17.]050 and [49.17.]060. 96-22-048, § 296-306A-53013, filed 10/31/96, effective 12/1/96.]

WAC 296-307-53015 What are the safe operating procedures for servicing single-piece rim wheels? You must establish safe operating procedures for servicing single-piece rim wheels, and ensure that employees are instructed in and follow the procedures. Your procedures must include at least the following:

(1) Before demounting, remove the valve core to completely deflate the tire.

(2) Mount and demount tires only from the narrow ledge side of the wheel. Take care to avoid damaging the tire beads while mounting. Only mount tires on compatible wheels of matching bead diameter and width.

(3) Apply nonflammable rubber lubricant to bead and wheel mating surfaces before rim wheel assembly, unless the tire or wheel manufacturer recommends against it.

(4) When using a tire changing machine, inflate tires only to the minimum pressure necessary to force the tire bead onto the rim ledge while on the tire changing machine.

(5) When using a bead expander, remove the bead expander before the valve core is installed and as soon as the rim wheel becomes airtight (the tire bead slips onto the bead seat).

(6) Always inflate tires within a restraining device, positioned behind a barrier, or bolted on the vehicle with the lug nuts fully tightened.

(7) Inflate tires only when the trajectory area is clear of flat, solid objects.

(8) Employees stay out of the trajectory when inflating a tire.

(9) Tires must not be inflated to more than the inflation pressure stamped in the sidewall unless a higher pressure is recommended by the manufacturer.

(10) Tires must not be inflated above the maximum pressure recommended by the manufacturer to seat the tire bead firmly against the rim flange.

(11) Heat must not be applied to a single-piece wheel.

(12) Cracked, broken, bent, or otherwise damaged wheels must not be reworked, welded, brazed, or otherwise heated.

[97-09-013, recodified as § 296-307-53015,filed 4/7/97, effective 4/7/97. Statutory Authority: RCW 49.17.040, [49.17.]050 and [49.17.]060. 96-22-048, § 296-306A-53015, filed 10/31/96, effective 12/1/96.]

WAC 296-307-53017 How can an employer order the OSHA charts? OSHA charts are available through OSHA area offices. You may find the address and telephone number of the nearest OSHA office in the local telephone directory under U.S. Government, U.S. Department of Labor, Occupational Safety and Health Administration. Single copies are available without charge.

If you want multiple copies of these charts, you may order them from the Publications Office, U.S. Department of Labor, Room N3101, Washington, D.C. 20210. Telephone: (202) 523-9667.

[97-09-013, recodified as § 296-307-53017, filed 4/7/97, effective 4/7/97. Statutory Authority: RCW 49.17.040, [49.17.]050 and [49.17.]060. 96-22-048, § 296-306A-53017, filed 10/31/96, effective 12/1/96.]

Part Y
Occupational Health Standards

Part Y-1
Employer Chemical Hazard Communication

WAC 296-307-550 Employer chemical hazard communication—Introduction. Important:

Thousands of chemicals can be found in today's workplaces. These chemicals may have the capacity to cause health problems, from minor skin irritations to serious injuries or diseases like cancer.

The employer chemical hazard communication rule was developed to make sure employers and employees are informed about chemical hazards in the workplace.

This rule applies to:

• Employers engaged in businesses where chemicals are used, distributed, or produced for use or distribution.

• Contractors or subcontractors that work for employers engaged in businesses where chemicals are used, distributed, or produced for use or distribution.

Note:
- If you produce, import, distribute and/or repackage chemicals, or choose not to rely on labels or material safety data sheets provided by the manufacturer or importer, you must comply with Material safety data sheets and label preparation, WAC 296-307-560 through 296-307-56050.
- You may withhold trade secret information under certain circumstances, see Trade secrets, WAC 296-62-053, to find out what information may be withheld as a trade secret and what information must be released.

EXEMPTIONS:
- For the purposes of this employer hazard communication rule, if you are engaged in agricultural production of crops or livestock, "employee" does not mean:
  - Immediate family members of the officers of any corporation, partnership, sole proprietorship or other business entity or officers of any closely held corporation.
- Certain products, chemicals, or items are exempt from this rule. Below is a summarized list of these exemptions. See WAC 296-307-55055 at the end of this rule to get complete information about these exemptions:
  - Any hazardous waste or substance
  - Tobacco or tobacco products
  - Wood or wood products that are not chemically treated and will not be processed, for example, by sawing and sanding
  - Food or alcoholic beverages
  - Some drugs, such as retail or prescription medications
  - Retail cosmetics
  - Ionizing and nonionizing radiation
  - Biological hazards
  - Any consumer product or hazardous substance when workplace exposure is the same as that of a consumer
  - ❖ Retail products used in offices in the same manner and frequency used by consumers can be termed "consumer products." Consumer products include things such as: Correction fluid, glass cleaner, and dishwashing liquid.

Example: If you use a household cleaner in your workplace in the same way that a consumer would use it when cleaning their house, the exposure should be the same as the consumer's. ("In the same way" means using the household cleaner in the same manner and frequency.) A janitor using a household cleaner, such as bleach, throughout the day, is not considered to be consumer use.

– Manufactured items that remain intact are exempt for this rule.
The following are examples:

Item	Covered by this rule	Not covered by this rule
Brick	sawed or cut in half	used whole or intact
Pipe	cut by a torch	bent with a tube bender
Nylon rope	burning the ends	tying a knot

– Manufactured items that are fluids or in the form of particles are not exempt for this rule.

Your responsibility:

To inform and train your employees about the hazards of chemicals they may be exposed to during normal working conditions, or in foreseeable emergencies by:

• Making a list of the hazardous chemicals present in your workplace

• Preparing a written Chemical Hazard Communication Program for your workplace

• Informing your employees about this rule and your program

• Providing training to your employees about working in the presence of hazardous chemicals

• Getting and keeping the material safety data sheets (MSDSs) for the hazardous chemicals

• Making sure that labels on containers of hazardous chemicals are in place and easy to read

You must:

Develop, implement, maintain, and make available a written Chemical Hazard Communication Program

WAC 296-307-55005

Identify and list all the hazardous chemicals present in your workplace

WAC 296-307-55010

Obtain and maintain material safety data sheets (MSDSs) for each hazardous chemical used

WAC 296-307-55015

Make sure that material safety data sheets (MSDSs) are readily accessible to your employees

WAC 296-307-55020

Label containers holding hazardous chemicals

WAC 296-307-55025

Inform and train your employees about hazardous chemicals in your workplace

WAC 296-307-55030

Follow these rules for laboratories using hazardous chemicals

WAC 296-307-55035

Follow these rules for handling chemicals in factory sealed containers

WAC 296-307-55040

The department must:

Translate certain chemical hazard communication documents upon request

WAC 296-307-55045

Attempt to obtain a material safety data sheet (MSDS) upon request

WAC 296-307-55050

Exemption: Items or chemicals exempt from the rule, and exemptions from labeling

WAC 296-307-55055

Definitions

WAC 296-307-55060

[Statutory Authority: RCW 49.17.010, 49.17.040, 49.17.050, 49.17.060. 05-01-166, § 296-307-550, filed 12/21/04, effective 4/2/05. Statutory Authority: RCW 49.17.010, [49.17].040, and [49.17].050. 01-17-033, § 296-307-550, filed 8/8/01, effective 9/1/01.]

WAC 296-307-55005 Develop, implement, maintain, and make available a written Chemical Hazard Communication Program. You must:

• Develop, implement, maintain, and make available a written Chemical Hazard Communication Program specifically for your workplace. The Chemical Hazard Communication Program must, at a minimum, include:

- A list of hazardous chemicals known to be present in your workplace

- Procedures for making sure all containers are properly labeled

- A description of how you are going to obtain and maintain your material safety data sheets (MSDSs)

- A description of how you are going to train and inform your employees about hazardous chemicals in their workplace

- A description of how you are going to inform your employees about:

❖ Chemical hazards used during nonroutine tasks

❖ The hazards associated with chemicals contained in unlabeled pipes in their work areas

You must:

• Make sure your written Chemical Hazard Communication Program includes the following communication methods you will apply if you produce, use, or store hazardous chemicals at your workplace(s) in such a way that the employees of other employer(s) may be exposed:

- Provide the other employer(s) with a copy of the relevant material safety data sheets (MSDSs), or provide access to the MSDSs in a central location at the workplace

- Inform the other employer(s) of any precautionary measures that need to be taken to protect employees during normal operating conditions and in foreseeable emergencies

- Describe how to inform the other employer(s) of the labeling system used in the workplace

Note:
- Examples of employees of other employers who could be exposed to chemical hazards that you produce, use, or store in your workplace include employees of construction companies, cleaning services, or maintenance contractors visiting or working on-site.
- Your employees have the right to get chemical hazard communication information from other employers at workplaces where they are working; and employees of other employers have the right to get the information from you when they are working at your workplace.
- Include in your written Chemical Hazard Communication Program the methods that you will use to share information with other employers and their employees at your workplace(s) regarding:
  – Access to MSDSs
  – Precautionary measures such as personal protective equipment (PPE) and emergency plans
  – Any labeling systems used at the workplace.
  If you rely on another employer's chemical hazard communication program to share the information required and the program meets the requirements of this rule, document in your own written Chemical Hazard Communication Program.

You must:

• Make your Chemical Hazard Communication Program available to your employees.

Note: Where employees must travel between workplaces during a workshift, that is, if their work is carried out at more than one geographical location, the written Chemical Hazard Communication Program may be kept at the primary workplace facility.

[Statutory Authority: RCW 49.17.010, [49.17].040, and [49.17].050. 01-17-033, § 296-307-55005, filed 8/8/01, effective 9/1/01.]

WAC 296-307-55010 Identify and list all the hazardous chemicals present in your workplace. You must:

• Identify all hazardous chemicals in your workplace. This includes any chemical that is known to be present in your workplace in such a way that employees may be exposed to it under normal conditions of use or in a foreseeable emergency.

• Create a list of these chemicals using the chemical or common name on the material safety data sheet (MSDS). This list:

– Must be compiled for the workplace as a whole, or for individual work areas.

– Is necessary to make sure that all hazardous chemicals are identified and that MSDS, and labeling rules are met.

– Must be current.

Note: The following are some ways to determine whether a product is hazardous:
- Look for words on the label, such as "CAUTION," "WARNING," or "DANGER."
- Look for words or "hazard coding" that indicate that the chemical is flammable, an irritant, corrosive, carcinogenic, etc. "Hazard coding" refers to words, numbers, or colors that tell you a chemical is dangerous.
- Check the product's MSDS for hazard information.
  Examples of hazardous chemicals are: Acids, adhesives, caustics, fuels, paints, varnishes, shellacs and pesticides. Too many other classes of hazardous chemicals exist to list them all here. If you have any questions about a chemical you have at your workplace, contact your local L&I office.

[Statutory Authority: RCW 49.17.010, [49.17].040, and [49.17].050. 01-17-033, § 296-307-55010, filed 8/8/01, effective 9/1/01.]

WAC 296-307-55015 Obtain and maintain material safety data sheets (MSDSs) for each hazardous chemical used.

You must:

• Obtain a MSDS for each hazardous chemical used as soon as possible if the MSDS is not provided with the shipment of a hazardous chemical from the chemical manufacturer or importer.

Note:
- To obtain a MSDS, you may try calling the manufacturer or checking their website.
- If you have a commercial account with a retailer or wholesaler, you have the right to request and receive a MSDS about hazardous chemicals you purchase.
- If a chemical is purchased from a retailer with no commercial accounts, you have the right to request and receive the manufacturer's name and address so that you can contact them and request a MSDS for the chemical.
- Whoever prepares the MSDS is required to mark all blocks on the form, even if there is no relevant information for that section.
- If you have problems getting a MSDS within 30 calendar days after making a written request to the chemical manufacturer, importer, or distributor, you can get help from WISHA. You may contact your local regional office for assistance or make a written request for assistance to the:
  Department of Labor and Industries
  Right-to-Know Program
  P.O. Box 44610
  Olympia, Washington 98504-4610
- Include in your request:
  – A copy of the purchaser's written request to the chemical manufacturer, importer, or distributor
  – The name of the product suspected of containing a hazardous chemical
  – The identification number of the product, if available
  – A copy of the product label, if available
  – The name and address of the chemical manufacturer, importer, or distributor from whom the product was obtained

You must:

• Maintain a MSDS for each hazardous chemical:

- Keep copies of the required MSDSs for each hazardous chemical present in your workplace. These may be kept in any form, including as a part of operating procedures.

- Each MSDS must be in English. You may also keep copies in other languages.

Note:
- If you choose not to rely on MSDSs or labels provided by the manufacturer or importer, you must comply with the chemical hazard communication standard for manufacturers, importers, and distributors, WAC 296-307-560 through 296-307-56050.
- It may be more appropriate to address the hazards of a process rather than individual hazardous chemicals.

MSDSs can be designed to cover groups of hazardous chemicals in a work area.

[Statutory Authority: RCW 49.17.010, 49.17.040, 49.17.050, 49.17.060. 05-01-166, § 296-307-55015, filed 12/21/04, effective 4/2/05. Statutory Authority: RCW 49.17.010, [49.17].040, and [49.17].050. 01-17-033, § 296-370-55015, filed 8/8/01, effective 9/1/01.]

WAC 296-307-55020 Make sure material safety data sheets are readily accessible to your employees. You must:

• Make sure that MSDSs are readily accessible, easily obtained without delay during each work shift to employees when they are in their work area(s).

• Make sure that employees, who must travel between workplaces during a work shift, such as when their work is carried out at more than one geographical location, can immediately obtain the required MSDS information in an emergency. (MSDSs may be kept at a central location at the primary workplace facility and accessed by means such as voice communication or laptop computer.)

Note:
- Electronic access (such as computer or fax), microfiche, and other alternatives to maintaining paper copies of the MSDSs are permitted as long as they do not create barriers to immediate employee access in each workplace.
- Barriers to immediate access of electronic MSDSs may include:
  - Power outages
  - Equipment failure
  - System delays
  - Deficient user knowledge to operate equipment
  - Location of equipment outside the work area

  Solutions to eliminating these and other possible barriers to access may require the availability of back-up systems, employee training, and providing access equipment in the work areas.

[Statutory Authority: RCW 49.17.010, [49.17].040, and [49.17].050. 01-17-033, § 296-307-55020, filed 8/8/01, effective 9/1/01.]

WAC 296-307-55025 Label containers holding hazardous chemicals.

EXEMPTIONS: The following is a summary of items that are exempt from this rule. For complete information about each of these, see WAC 296-307-55055.
– Pesticides, when labeled as required by the Environmental Protection Agency (EPA)
– Food, food additives, color additives, drugs, cosmetics, or medical/veterinary devices or products
– Alcoholic beverages not intended for industrial use
– Consumer products labeled, as required, by the Consumer Product Safety Commission
– Agriculture or vegetable seeds treated and labeled as required by the Federal Seed Act

Note: You are not required to label portable containers into which hazardous chemicals are transferred from labeled containers, if the chemical is used and controlled by the employee who performed the transfer within the same shift.

You must:

• Make sure that each container of hazardous chemicals in the workplace is labeled, tagged, or marked with the following information:

– The identity of the hazardous chemical(s) using either the chemical or common name

Note: You are not required to list each component in a hazardous mixture on the label. If a mixture is referred to on a material safety data sheet (MSDS) by a product name, then the product name should be used as the identifier.

– Appropriate hazard warnings which give general information about the relevant health and physical hazards of the chemicals. This includes health effects information, such as information about organs most likely to be affected by the chemicals.

EXAMPLES OF LABEL:

Name of Chemical Physical Hazards Health Hazards; • Health effects information • Affected Target Organs

– For individual stationary process containers, you may use alternate labeling methods such as:

❖ Signs
❖ Placards
❖ Process sheets
❖ Batch tickets
❖ Operating procedures or
❖ Other such written materials, as long as the alternate method identifies the containers and conveys the required label information.

Note:
- You may use words, pictures, symbols or any combination to communicate the hazards of the chemical. Be sure to train your employees so they can demonstrate a knowledge of the labeling system you use.

- Some alternative labeling systems do not communicate target organ information, so the employee will have to rely on training provided by the employer to obtain this information.

You must:

• Not remove or deface existing labels on incoming containers of hazardous chemicals (such as those marked with United States Department of Transportation (USDOT) markings, placards, and labels), unless the container is immediately labeled with the required information. You do not need to put on new labels if existing labels already provide the required information. If the package or container is sufficiently cleaned of residue and purged of vapors to remove any potential health or physical hazard, existing labels can be removed.

• Make sure that labels or other forms of warning are legible, in English, and prominently displayed on the container, or readily available in the work area throughout each work shift.

Note:
- Employers with non-English speaking employees may use other languages in the warning information in addition to the English language.

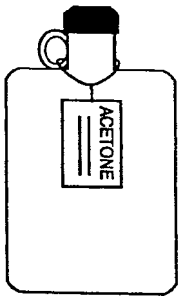

- Above is an example of a labeled container. You may use a laminated or coated label, affixed to the container with a wire, to avoid deterioration of labels due to a solvent, such as acetone.

You must:

• Make sure if the hazardous chemical is regulated by WISHA or OSHA in a substance-specific health rule, that the labels or other warnings are used according to those rules.

[Statutory Authority: RCW 49.17.010, [49.17].040, and [49.17].050. 01-17-033, § 296-307-55025, filed 8/8/01, effective 9/1/01.]

WAC 296-307-55030 Inform and train your employees about hazardous chemicals in your workplace.

Note: The employer chemical hazard communication information and training requirements also apply to pesticides. Employers who have employees who are exposed to pesticides must be in compliance with this rule and the worker protection standards, WAC 296-307-12040.

You must:

• Provide employees with effective information on hazardous chemicals in their work area at the time of their initial job assignment. Whenever a new physical or health hazard related to chemical exposure is introduced into their employees' work areas, information must be provided.

– Inform employees of:

❖ The requirements of this rule.

❖ Any operations in their work area where hazardous chemicals are present.

❖ The location and availability of your written Chemical Hazard Communication Program, including the list(s) of hazardous chemicals and material safety data sheets (MSDSs) required by this rule.

• Provide employees with effective training about hazardous chemicals in their work area at the time of their initial job assignment. Whenever a new physical or health hazard related to chemical exposure is introduced, the employees must be trained.

• Make sure that employee training includes:

– Methods and observations that may be used to detect the presence or release of a hazardous chemical in the work area. Examples of these methods and observations may include:

❖ Monitoring conducted by you

❖ Continuous monitoring devices

❖ Visual appearance or odor of hazardous chemicals when being released

– Physical and health hazards of the chemicals in the work area, including the likely physical symptoms or effects of overexposure

– Steps employees can take to protect themselves from the chemical hazards in your workplace, including specific procedures implemented by you to protect employees from exposure to hazardous chemicals. Specific procedures may include:

■ Appropriate work practices

■ Engineering controls

■ Emergency procedures

■ Personal protective equipment to be used

– Details of the Chemical Hazard Communication Program developed by you, including an explanation of the labeling system and the MSDS, and how employees can obtain and use the appropriate hazard information.

• Tailor information and training to the types of hazards to which employees will be exposed. The information and training may be designed to cover categories of hazards, such as flammability or cancer-causing potential, or it may address specific chemicals. Chemical-specific information must always be available through labels and MSDSs.

• Make reasonable efforts to post notices in your employees' native languages (as provided by the department) if those employees have trouble communicating in English.

Note:
- Interactive computer-based training or training videos can be used provided they are effective.
- Your MSDSs may not have WISHA permissible exposure limits (PELs) listed. In some cases, WISHA PELs are stricter than the OSHA PELs and other exposure limits listed on the MSDSs you receive. If this is the case, you must refer to the WISHA PEL table, WAC 296-307-62625, for the appropriate exposure limits to be covered during training.

[Statutory Authority: RCW 49.17.010, 49.17.040, 49.17.050, 49.17.060. 05-01-166, § 296-307-55030, filed 12/21/04, effective 4/2/05; 03-10-068, § 296-307-55030, filed 5/6/03, effective 8/1/03. Statutory Authority: RCW 49.17.010, [49.17].040, and [49.17].050. 01-17-033, § 296-307-55030, filed 8/8/01, effective 9/1/01.]

WAC 296-307-55035 Follow these rules for laboratories using hazardous chemicals.

Note: Laboratories are required to have a written Chemical Hygiene Plan under WAC 296-62-400, if applicable. They are not required to have a written Chemical Hazard Communication Program.
You may combine your Accident Prevention Program and Chemical Hazard Communication Program to assist you in developing a Chemical Hygiene Plan for your laboratory.

You must:

(1) Make sure that labels on incoming containers of hazardous chemicals are in place and readable.

(2) Maintain material safety data sheets (MSDSs) received with incoming shipments of hazardous chemicals and make them available to laboratory employees when they are in their work areas.

(3) Provide laboratory employees with information and training as described in: "Inform and train your employees about hazardous chemicals in your workplace," WAC 296-307-55030, except for the part about the location and availability of the written Chemical Hazard Communication Program.

Note: Laboratory employers that ship hazardous chemicals are considered to be either chemical manufacturers or distributors. When laboratory employers ship hazardous chemicals they must comply with the rule, Material safety data sheets and label preparation, WAC 296-307-560 through 296-307-56050.

[Statutory Authority: RCW 49.17.010, 49.17.040, 49.17.050, 49.17.060. 05-01-166, § 296-307-55035, filed 12/21/04, effective 4/2/05. Statutory Authority: RCW 49.17.010, [49.17].040, and [49.17].050. 01-17-033, § 296-307-55035, filed 8/8/01, effective 9/1/01.]

WAC 296-307-55040 Follow these rules for handling chemicals in factory-sealed containers. You must:

This applies to situations where employees only handle chemicals in factory-sealed containers that are not opened under normal use (such as those found in marine cargo handling, trucking, warehousing, or retail sales).

You must:

(1) Make sure that labels on incoming containers of hazardous chemicals are in place and readable.

(2) Keep or obtain material safety data sheets.

• Keep any MSDSs that are received with incoming shipments of the sealed containers of hazardous chemicals

• If a factory-sealed container of hazardous chemicals comes without a MSDS, obtain one as soon as possible, if an employee requests it

(3) Make sure that the MSDSs are readily accessible during each work shift to employees when they are in their work area(s).

(4) Inform and train your employees about hazardous chemicals in your workplace, to protect them in case of a hazardous chemical spill or leak from a factory-sealed container. You do not have to cover the location and availability of the written Chemical Hazard Communication Program.

[Statutory Authority: RCW 49.17.010, [49.17].040, and [49.17].050. 01-17-033, § 296-307-55040, filed 8/8/01, effective 9/1/01.]

WAC 296-307-55045 Translate certain chemical hazard communication documents upon request. The department must:

• Upon receipt of a written or verbal request, prepare and make available (within available resources) to employers or the public, a translation into Cambodian, Chinese, Korean, Spanish, or Vietnamese of any of the following:

– An employer's written Chemical Hazard Communication Program

– A material safety data sheet or

– Written materials prepared by the department to inform employees of their rights described in this rule, regarding chemical hazard communication

Note: Written requests for translations should be directed to:
Department of Labor and Industries
Right-to-Know Program
P.O. Box 44610
Olympia, Washington 98504-4610

[Statutory Authority: RCW 49.17.010, [49.17].040, and [49.17].050. 01-17-033, § 296-307-55045, filed 8/8/01, effective 9/1/01.]

WAC 296-307-55050 Attempt to obtain a material safety data sheet (MSDS) upon request. The department must:

• Upon receipt of an employer's written request for a material safety data sheet, attempt to obtain the MSDS from the chemical manufacturer, importer, or distributor. When the department receives the MSDS, the department must forward a copy of it to the purchaser at no cost. Small business employers will be given priority for this service.

[Statutory Authority: RCW 49.17.010, [49.17].040, and [49.17].050. 01-17-033, § 296-307-55050, filed 8/8/01, effective 9/1/01.]

WAC 296-307-55055 Items or chemicals exempt from the rule, and exemptions from labeling.

• Listed below are the full descriptions of the items or chemicals that are exempt, or not covered, by this rule:

– Any consumer product or hazardous substance, defined in the Consumer Product Safety Act (15 U.S.C. 2051 et seq.) and Federal Hazardous Substance Act (15 U.S.C. 1261 et seq.) respectively, where you can show that it is used in the workplace for the purpose intended by the chemical manufacturer or importer of the product, and the use results in a duration and frequency of exposure that is not greater than the range of exposures that could reasonably be experienced by consumers when used for the purpose intended.

– Any hazardous waste, defined by the Hazardous Waste Management Act chapter 70.105 RCW, when subject to regulations issued under that act by the department of ecology, that describes specific safety, labeling, personnel training, and other rules for the accumulation, handling, and management of hazardous waste.

– Any hazardous waste, defined by the Solid Waste Disposal Act, as amended by the Resource Conservation and Recovery Act of 1976, as amended (42 U.S.C. 6901 et seq.), when subject to regulations issued under that act by the Environmental Protection Agency.

– Any hazardous substance, defined by the Comprehensive Environmental Response, Compensation and Liability Act (CERCLA) (42 U.S.C. 9601 et seq.), when the hazardous substance is the focus of remedial or removal action being conducted under CERCLA in accordance with Environmental Protection Agency regulations.

– Tobacco or tobacco products.

– Wood or wood products, including lumber that will not be processed, where the chemical manufacturer or importer can establish that the only hazard they pose to the employees is the potential for flammability or combustibility. Wood or wood products that have been treated with hazardous chemicals covered by this rule, and wood that may be subsequently sawed or cut, generating dust, are not exempt.

– Articles, meaning manufactured items other than a fluid or particle that:

❖ Are formed to a specific shape or design during manufacture;

❖ Have end use function(s) dependent in whole or in part upon their shape or design during end use; and

❖ Under normal conditions of use, do not release more than very small quantities, for example minute or trace amounts of a hazardous chemical such as emissions from a marking pen or a newly varnished wood chair, and do not pose a physical hazard or health risk to employees.

– Food or alcoholic beverages that are sold, used, or prepared in a retail establishment such as a grocery store, restaurant, or drinking place, and foods intended for personal consumption by employees while in the workplace.

– Any drug, defined in the Federal Food, Drug, and Cosmetic Act (21 U.S.C. 301 et seq.), when it is in solid, final form for direct administration to the patient (for example, tablets or pills); drugs that are packaged by the chemical manufacturer for sale to consumers in a retail establishment (for example over-the-counter drugs); and drugs intended for personal consumption by employees while in the workplace (for example, first-aid supplies). Aerosolized or cytotoxic drugs administered by a health care worker are not excluded.

– Cosmetics packaged for sale to consumers in a retail establishment, and cosmetics intended for personal consumption by employees while in the *workplace.*

– Ionizing and nonionizing radiation.

– Biological hazards.

• This rule does not require labeling of the following chemicals:

– Any pesticide, defined in the Federal Insecticide, Fungicide, and Rodenticide Act (7 U.S.C. 136 et seq.), when subject to the labeling requirements of that act and labeling reg-

ulations issued under that act by the Environmental Protection Agency.

– Any chemical substance or mixture, in the Toxic Substance Control Act (15 U.S.C. 2601 et seq.), when subject to the labeling requirements of that act, and labeling requirements issued under that act by the Environmental Protection Agency.

– Any food, food additive, color additive, drug, cosmetic, or medical/veterinary device or product, including materials intended for use as ingredients in such products (for example, flavors and fragrances), as such terms are defined in the Federal Food, Drug, and Cosmetic Act (21 U.S.C. 301 et seq.) or the Virus-Serum Toxin Act of 1913 (21 U.S.C. 151 et seq.) and regulations issued under those acts, when they are subject to the labeling requirements under those acts by either the Food and Drug Administration or the Department of Agriculture.

– Any distilled spirits (beverage alcohols), wine, or malt beverage intended for nonindustrial use, defined in the Federal Alcohol Administration Act (27 U.S.C. 201 et seq.) and regulations issued under that act, when subject to the labeling requirements of that act and labeling regulations issued under that act by the Bureau of Alcohol, Tobacco, and Firearms.

– Any consumer product or hazardous substance, as defined in the Consumer Product Safety Act (15 U.S.C. 2051 et seq.) and Federal Hazardous Substances Act (15 U.S.C. 1261 et seq.) respectively, when subject to a consumer product safety rule or labeling requirement of those acts, or regulations issued under those acts by the Consumer Product Safety Commission.

– Agricultural or vegetable seed treated with pesticides and labeled in accordance with the Federal Seed Act (7 U.S.C. 1551 et seq.), and the labeling requirements issued under that act by the Department of Agriculture.

[Statutory Authority: RCW 49.17.010, [49.17].040, and [49.17].050. 01-17-033, § 296-307-55055, filed 8/8/01, effective 9/1/01.]

WAC 296-307-55060 Definitions.

Chemical

• An element or mixture of elements

OR

• A compound or mixture of compounds

OR

• A mixture of elements and compounds

Included are manufactured items (such as bricks, welding rods, and sheet metal) that are not exempt as an article.

Chemical manufacturer

An employer with a workplace where one or more chemicals are produced for use or distribution.

Chemical name

• The scientific designation of a chemical developed by the:

– International Union of Pure and Applied Chemistry (IUPAC)

OR

– Chemical abstracts service (CAS) rules of nomenclature

OR

– A name that clearly identifies the chemical for the purpose of conducting a hazard evaluation.

Combustible liquid

Liquids with a flashpoint of at least 100°F (37.8°C) and below 200°F (93.3°C). A mixture with at least 99% of its components having flashpoints of 200°F (93.3°C), or higher, is not considered a combustible liquid.

Commercial account

An arrangement where a retailer is selling hazardous chemicals to an employer

• Generally in large quantities over time

OR

• At costs below regular retail price.

Common name

Any designation or identification used to identify a chemical other than the chemical name, such as a:

• Code name or number

OR

• Trade or brand name

OR

• Generic name.

Compressed gas

A contained gas or mixture of gases with an absolute pressure greater than:

• 40 psi at 70°F (21.1°C)

OR

• 104 psi at 130°F (54.4°C) regardless of the pressure at 70°F (21.1°C)

OR

A liquid with a vapor pressure greater than 40 psi at 100°F (37.8°C) as determined by ASTM D323-72.

Container

A vessel, other than a pipe or piping system, that holds a hazardous chemical. Examples include:

• Bags
• Barrels
• Bottles
• Boxes
• Cans
• Cylinders
• Drums
• Rail cars
• Reaction vessels
• Storage tanks.

Designated representative

• An individual or organization with written authorization from an employee.

OR

• A recognized or certified collective bargaining agent (not necessarily authorized by an employee).

OR

• A legal representative of a deceased or legally incapacitated employee.

Director

The director means the director of the department of labor and industries or their designee.

Distributor

A business, other than a chemical manufacturer or importer, that supplies hazardous chemicals to other distributors or to employers. See WAC 296-307-560 through 296-307-56050 for requirements dealing with manufacturers, distributors and importers - hazard communication.

Employee

The term employee and other terms of like meaning, unless the context of the provision containing such term indicates otherwise, means an employee of an employer who is employed in the business of his or her employer whether by way of manual labor or otherwise and every person in this state who is engaged in the employment of or who is working under an independent contract the essence of which is personal labor for an employer under this standard whether by way of manual labor or otherwise.

Employer

An employer is any person, firm, corporation, partnership, business trust, legal representative, or other business entity which engages in any business, industry, profession, or activity in this state and employs one or more employees or who contracts with one or more persons, the essence of which is the personal labor of such person or persons and includes the state, counties, cities, and all municipal corporations, public corporations, political subdivisions of the state, and charitable organizations: Provided, That any persons, partnership, or business entity not having employees, and who is covered by the Industrial Insurance Act must be considered both an employer and an employee.

Explosive

A chemical that causes a sudden, almost instant release of pressure, gas, and heat when exposed to a sudden shock, pressure, or high temperature.

Exposure or exposed

An employee has been, or may have possibly been, subjected to a hazardous chemical, toxic substance or harmful physical agent while working. An employee could have been exposed to hazardous chemicals, toxic substances, or harmful physical agents in any of the following ways:

• Inhalation
• Ingestion
• Skin contact
• Absorption
• Related means.

The terms exposure and exposed only cover workplace exposure involving a toxic substance or harmful physical agent in the workplace different from typical nonoccupational situations in the way it is:

• Used
• Handled
• Stored
• Generated

OR

• Present.

Flammable

A chemical in one of the following categories:

• Aerosols that, when tested using a method described in 16 CFR 1500.45, yield either a:

– Flame projection of more than eighteen inches at full valve opening

OR

– A flashback (a flame extending back to the valve) at any degree of valve opening

• Gases that, at the temperature and pressure of the surrounding area, form a:

– Flammable mixture with air at a concentration of thirteen percent, by volume, or less

OR

– Range of flammable mixtures with air wider than twelve percent, by volume, regardless of the lower limit

• Liquids with a flashpoint below 100°F (37.8°C). A mixture with at least ninety-nine percent of its components having flashpoints of 100°F (37.8°C), or higher, is not considered a flammable liquid

• Solids, other than blasting agents or explosives, as defined in WAC 296-52-417 or 29 CFR 1910.109(a), that:

– Is likely to cause fire through friction, moisture, absorption, spontaneous chemical change or retained heat from manufacturing or processing

OR

– That can be readily ignited (and when ignited burns so vigorously and persistently that it creates a serious hazard)

OR

– When tested by the method described in 16 CFR 1500.44, ignite and burn with a self-sustained flame at a rate greater than one-tenth of an inch per second along its major axis.

Flashpoint

• The minimum temperature at which a liquid gives off an ignitable concentration of vapor, when tested by any of the following measurement methods:

– Tagliabue closed tester. Use this for liquids with a viscosity less than 45 Saybolt Universal Seconds (SUS) at 100°F (37.8°C), that do not contain suspended solids and do not tend to form a surface film under test. See American National Standard Method of Test for Flashpoint by Tag Closed Tester, Z11.24.1979 (ASTM D 56-79)

– Pensky-Martens closed tester for liquids with a viscosity equal to, or greater than, 45 SUS at 100°F (37.8°C), or for liquids that contain suspended solids, or have a tendency to form a surface film under test. See American National Standard Method of Test for Flashpoint by Pensky-Martens Closed Tester, Z11.7.1979 (ASTM D 93-79)

– Setaflash closed tester: See American National Standard Method of Test for Flash Point by Setaflash Closed Tester (ASTM D 3278-78).

Organic peroxides, which undergo auto accelerating thermal decomposition, are excluded from any of the flashpoint measurement methods specified above.

Foreseeable emergency

Any potential event that could result in an uncontrolled release of a hazardous chemical into the workplace. Examples of foreseeable emergencies include equipment failure, rupture of containers, or failure of control equipment.

Hazardous chemical

A chemical, which is a physical or health hazard.

Hazard warning

Words, pictures, or symbols (alone or in combination), that appear on labels (or other forms of warning such as placards or tags) that communicate specific physical and health hazard(s), (including target organ effects), associated with chemical(s) in a container.

Health hazard

A chemical that may cause health effects in short or long-term exposed employees based on statistically significant evidence from a single study conducted by using estab-

lished scientific principles. Health hazards include, but are not limited to, any of the following:

• Carcinogens
• Toxic or highly toxic substances
• Reproductive toxins
• Irritants
• Corrosives
• Sensitizers
• Hepatotoxins (liver toxins)
• Nephrotoxins (kidney toxins)
• Neurotoxins (nervous system toxins)
• Substances that act on the hematopoietic system (blood or blood forming system)
• Substances that can damage the lungs, skin, eyes, or mucous membranes.

Identity

A chemical or common name listed on the material safety data sheet (MSDS) and label.

Importer

The first business within the customs territory of the USA that:

• Receives hazardous chemicals produced in other countries

AND

• Supplies them to manufacturers, distributors or employers within the USA.

Material safety data sheet (MSDS)

Written, printed or electronic information (on paper, microfiche, or on-screen) that informs manufacturers, distributors or employers about the chemical, its hazards and protective measures as required by this rule.

Mixture

A combination of 2 or more chemicals that retain their chemical identity after being combined.

Organic peroxide

An organic compound containing the bivalent-0-0-structure. It may be considered a structural derivative of hydrogen peroxide if one or both of the hydrogen atoms has been replaced by an organic radical.

Oxidizer

A chemical, other than a blasting agent or explosive as defined in WAC 296-52-417 or CFR 1910.109(a), that starts or promotes combustion in other materials, causing fire either of itself or through the release of oxygen or other gases.

Permissible exposure limits (PELs)

See WAC 296-307-628 for the definition of this term.

Physical hazard

A chemical that has scientifically valid evidence to show it is one of the following:

• A combustible liquid
• A compressed gas
• Explosive
• Flammable
• An organic peroxide
• An oxidizer
• Pyrophoric
• Unstable (reactive)
• Water reactive.

Produce

To do one or more of the following:

• Manufacture
• Process
• Formulate
• Blend
• Extract
• Generate
• Emit
• Repackage.

Purchaser

An employer who buys one or more hazardous chemicals to use in their workplace.

Pyrophoric

Chemicals that ignite spontaneously in the air at a temperature of 130°F (54.4°C) or below.

Responsible party

Someone who can provide more information about the hazardous chemical and appropriate emergency procedures.

Specific chemical identity

This term applies to chemical substances. It can mean the:

• Chemical name
• Chemical abstracts service (CAS) registry number
• Any other information that reveals the precise chemical designation of the substance.

Trade secret

Any confidential:

• Formula
• Pattern
• Process
• Device
• Information
• Collection of information.

The trade secret is used in an employer's business and gives an opportunity to gain an advantage over competitors who do not know or use it.

See WAC 296-62-053 for requirements dealing with trade secrets.

Unstable (reactive)

A chemical in its pure state, or as produced or transported, that will vigorously polymerize, decompose, condense, or become self-reactive under conditions of shocks, pressure or temperature.

Use

To do one or more of the following:

• Package
• Handle
• React
• Emit
• Extract
• Generate as a by-product
• Transfer.

Water-reactive

A chemical that reacts with water to release a gas that is either flammable or presents a health hazard.

Work area

A room or defined space in a workplace where hazardous chemicals are produced or used, and where employees are present.

Workplace

The term workplace means an establishment, job site, or project, at one geographical location containing one or more work areas.

[Statutory Authority: RCW 49.17.010, 49.17.040, 49.17.050, 49.17.060. 05-01-166, § 296-307-55060, filed 12/21/04, effective 4/2/05. Statutory Authority: RCW 49.17.010, [49.17].040, and [49.17].050. 01-17-033, § 296-307-55060, filed 8/8/01, effective 9/1/01.]

Part Y-2
Material Safety Data Sheets and Label Preparation

WAC 296-307-560 Scope. This chapter sets minimum requirements for content and distribution of material safety data sheets (MSDSs) and labels for hazardous chemicals.

• This chapter applies when you do **one or more** of the following:

– Import, produce, or repackage chemicals, including manufactured items (such as bricks, welding rods, and sheet metal) that are not exempt as articles

– Sell or distribute hazardous chemicals to manufacturers, distributors or employers

– Choose not to rely on material safety data sheets (MSDSs) provided by the importer, manufacturer or distributor.

Note:
- You are not required to evaluate chemicals or create MSDSs for chemicals you did not produce or import. If you decide to evaluate chemicals or create MSDSs, then the requirements of this chapter will apply to you.
- Use Table 2 to determine which sections in this chapter apply to your workplace.

Exemptions:
- All of the following are **always** exempt from this chapter:
  – Ionizing and nonionizing radiation
  – Biological hazards
  – Tobacco and tobacco products
- The chemicals and items listed in Table 1 are exempt from this chapter **under the conditions specified.**

Table 1
Conditional Exemptions From This Chapter

This chapter does NOT apply to	**When**
• Alcoholic beverages **OR** • Foods	• Sold, used, or prepared in a retail establishment (such as a grocery store, restaurant, bar, or tavern)
• An article (manufactured item)	• It is not a fluid or particle **AND** • It is formed to a specific shape or design during manufacture for a particular end use function[1] **AND** • It releases only trace amounts of a hazardous chemical during normal use **AND** does not pose a physical or health risk to employees
• Consumer products	• Both criteria apply:
– Produced or distributed for sale meeting the definition of "consumer products" in the Consumer Product Safety Act (see U.S. Code, Title 15, Chapter 47, section 2052[2]) **OR** • Hazardous household products – Meeting the definition of "hazardous substances" in the Federal Hazardous Substance Act (see U.S. Code, Title 15, Chapter 30, section 1261[2])	– They are used in the workplace for the same purpose as intended by the manufacturer or importer – The duration and frequency of an employee's exposure is no more than the range of exposures that consumers might reasonably experience
• Cosmetics	• Packaged and sold in retail establishments
• Drugs – Meeting the definition for "drugs" in the Federal Food, Drug, and Cosmetic Act (see U.S. Code, Title 21, Chapter 9, Subchapter II, section 321[2])	• In solid, final form (for example, tablets, or pills) for direct administration to the patient **OR** • Packaged and sold in retail establishments (for example, over-the-counter drugs) **OR** • Intended for employee consumption while in the workplace (for example, first-aid supplies)
• Hazardous solid wastes – Meeting the definition of "hazardous wastes" in the Solid Waste Disposal Act, as amended by the Resource Conservation and Recovery Act of 1976 (see U.S. Code, Title 42, Chapter 82, Subchapter I, section 6903[2])	• Subject to the United States Environmental Protection Agency (EPA) regulations[3]
• Hazardous substances	

Table 1 Conditional Exemptions From This Chapter	
This chapter does NOT apply to	**When**
– Released into the environment, meeting the definition of "hazardous substances" in the Comprehensive Environmental Response, Compensation and Liability Act (CERCLA) (see U.S. Code, Title 42, Chapter 103, Subchapter I, section 9601[2])	• They are the focus of remedial or removal action being conducted under CERCLA in accordance with EPA regulations (Title 40 of the Code of Federal Regulations (CFR)[3])
• Hazardous wastes – Meeting the definition of "dangerous wastes" in the Hazardous Waste Management Act (see chapter 70.105 RCW[4])	• Subject to department of ecology regulations, chapter 173-303 WAC[5], that address the accumulation, handling and management of hazardous waste, and describe all of the following: – Safety – Labeling – Personnel training – And other related requirements
• Solid wood **OR** • Wood products (for example, lumber, and paper)	• All of the following apply: – The material is not treated with hazardous chemicals – The only hazard is potential flammability or combustibility – The product is not expected to be processed (for example, by sanding or sawing)

[1]End use is dependent in whole, or in part, upon maintaining the item's original shape or design. If the item will be significantly altered from its original form, it can no longer be considered a manufactured item.

[2]This federal act is included in the United States Code. See http://www.access.gpo.gov/uscode/uscmain.html.

[3]EPA regulations are included in the Code of Federal Regulations (CFR). See http://www.epa.gov.

[4]This state act is included in the Revised Code of Washington (RCW). The RCW compiles all permanent laws of the state. See http://www.leg.wa.gov/wsladm/default.htm.

[5]See http://www.ecy.wa.gov.

Use Table 2 to find out which sections of this part apply to you. For example, if you import **AND** sell hazardous chemicals **ALL** sections apply. WAC 296-307-56050 applies to all employers covered by the scope of this part.

Table 2 Section Application				
If you	**Then the sections marked with an "X" apply**			
	56010 - 56015	**56025**	**56030 - 56035**	**56045**
• Import or produce chemicals	X	X		
• Sell or distribute hazardous chemicals to – Manufacturers **OR** – Distributors **OR** – Employers (includes retail or wholesale transactions)			X	X
• Choose to **NOT** rely on MSDSs provided by the importer, manufacturer or distributor	X	X		

[Statutory Authority: RCW 49.17.010, 49.17.040, 49.17.050, 49.17.060. 05-01-166, § 296-307-560, filed 12/21/04, effective 4/2/05; 03-10-068, § 296-307-560, filed 5/6/03, effective 8/1/03.]

WAC 296-307-56005 Hazard evaluation.

Your responsibility:

To make sure the hazardous chemicals are identified.

You must:

Conduct complete hazard evaluations

WAC 296-307-56010

Provide access to hazard evaluation procedures

WAC 296-307-56015.

[Statutory Authority: RCW 49.17.010, 49.17.040, 49.17.050, and 49.17.060. 03-10-068, § 296-307-56005, filed 5/6/03, effective 8/1/03.]

WAC 296-307-56010 Conduct complete hazard evaluations.

IMPORTANT:

• Hazard evaluation is a process where hazards of chemicals are identified by reviewing available research or testing information. You are not required to perform your own laboratory research or testing to meet the requirements of this section

– Information from hazard evaluations is used to complete material safety data sheets (MSDSs) and labels

– MSDSs from your suppliers may be used to complete the hazard evaluation for chemicals you produce

– MSDSs and labels are **NOT** required for chemicals that are determined to be nonhazardous

• Importers and manufacturers are required to develop MSDSs and labels. If you decide to develop your own MSDSs and labels, then this chapter also applies to you.

You must:

(1) Describe in writing your procedures for conducting hazard evaluations.

(2) Conduct a complete hazard evaluation for **ALL** chemicals you produce or import to determine if they are hazardous chemicals.

• Identify and consider available scientific evidence of health and physical hazards

• Evidence that meets the criteria in Table 3 must be used to establish a hazard

• Chemicals identified in a Table 4 source must be regarded as hazardous

• The scope of health hazards considered must include the categories in Tables 5 and 6

• If the chemical is a mixture, follow the additional criteria in Table 7

• If you find evidence that meets the criteria in Table 3, use it in your hazard evaluation.

Table 3
Criteria for Hazard Evidence

Hazard	Criteria
• Health hazard	• Where available, use human case reports of health effects **AND** • One or more studies that – Are based on human populations, if available, and animal populations[1,2] **AND** – Report statistically significant conclusions of a hazardous effect or health hazard (as defined in this rule) **AND** – Have been conducted following established scientific principles
• Physical hazard	• Valid evidence that shows a chemical is any one of the following[3]: – A combustible liquid – A compressed gas – Explosive – Flammable – An organic peroxide – An oxidizer – Pyrophoric – Unstable (reactive) – Water-reactive

[1]If human data is not available, use results of tests done on animals and other available studies to predict health effects on employees (for example, effects resulting from short and long-term exposures to chemicals).

[2]In vitro studies alone do not generally form the basis of a finding of hazard.

[3]These terms are defined in WAC 296-307-56050.

Chemicals identified in the sources listed in Table 4 must be assumed to be hazardous (including carcinogens and potential carcinogens).

Table 4
Information Sources Identifying Hazardous Chemicals

• Sources that address a broad range of hazard categories:
– Chapter 296-62 WAC, General Occupational Health Standards, WISHA
– 29 CFR Part 1910, Subpart Z, Toxic and Hazardous Substances, Occupational Safety and Health Administration (OSHA)
– *Threshold Limit Values for Chemical Substances and Physical Agents in the Work Environment,* American Conference of Governmental Industrial Hygienists (ACGIH) (latest edition).

• Sources that identify carcinogens or potential carcinogens:
– Chapter 296-62 WAC, General Occupational Health Standards, WISHA
– 29 CFR Part 1910, Subpart Z, Toxic and Hazardous Substances, Occupational Safety and Health Administration (OSHA)
– National Toxicology Program (NTP), Annual Report on Carcinogens (latest edition)
– International Agency for Research on Cancer (IARC) Monographs (latest editions).

Note:
The *Registry of Toxic Effects of Chemical Substances* is published by the National Institute for Occupational Safety and Health (NIOSH) and identifies chemicals found to be potential carcinogens by the NTP and IARC.

Chemicals meeting Table 5 definitions, along with the criteria for established evidence in Table 3, must be regarded as hazardous.

Table 5 is NOT intended to present all hazard categories or test methods. Available scientific data involving other test methods and animal species must also be evaluated to determine a chemical's hazards.

Table 5
Standard Health Hazard Categories

A chemical is considered to be	If
• A carcinogen	• The International Agency for Research on Cancer (IARC) considers it to be a carcinogen or potential carcinogen **OR** • The National Toxicity Program (NTP) (latest edition) lists it as a carcinogen or potential carcinogen **OR** • It is regulated by WISHA or OSHA as a carcinogen
• Corrosive	• It causes visible destruction of, or irreversible alterations in, living tissue (not inanimate surfaces) by chemical action at the site of contact Example:

Table 5 Standard Health Hazard Categories	
A chemical is considered to be	**If**
	– A chemical is corrosive if tested on the intact skin of albino rabbits by a method described by the U.S. Department of Transportation (in Appendix A to 49 CFR Part 173) and it destroys or changes (irreversibly) the structure of the tissue at the contact site after a four-hour exposure period
• Toxic	• It has a median lethal dose (LD50) greater than 50 milligrams per kilogram, but no more than 500 milligrams per kilogram of body weight, when administered orally to albino rats weighing between 200 - 300 grams each **OR** • It has a median lethal dose (LD50) greater than 200 milligrams per kilogram, but not more than 1,000 milligrams per kilogram, of body weight when administered by continuous contact for twenty-four hours (or less if death occurs within twenty-four hours) with the bare skin of albino rabbits weighing between 2 - 3 kilograms each **OR** • It has a median lethal concentration (LC50), in air: – Greater than 200 parts per million, but not more than 2,000 parts per million (by volume of gas or vapor) **OR** – Greater than 2 milligrams per liter, but not more than 20 milligrams per liter, of mist, fume, or dust, when administered by continuous inhalation for one hour (or less if death occurs within one hour) to albino rats, weighing between 200 - 300 grams each
• Highly toxic	• It has a median lethal dose (LD50) of 50 milligrams, or less, per kilogram of body weight when administered orally to albino rats weighing between 200 - 300 grams each **OR** • It has a median lethal dose (LD50) of 200 milligrams, or less, per kilogram of body weight when administered by continuous contact for twenty-four hours (or less if death occurs within twenty-four hours) with the bare skin of albino rabbits weighing between 2 - 3 kilograms each **OR** • It has a median lethal concentration of (LC50), in air, of: – 200 parts per million (by volume), or less, of gas or vapor **OR** – 2 milligrams per liter, or less, of mist, fume, or dust, when administered by continuous inhalation for one hour (or less if death occurs within one hour) to albino rats weighing between 200 - 300 grams each
• An irritant	• It is **NOT** corrosive, but causes a reversible inflammatory effect on living tissue by chemical action at the contact site Examples: – The chemical is a skin irritant when tested on the intact skin of albino rabbits (by the methods of 16 CFR 1500.41) for four hours exposure (or by other appropriate techniques), and the exposure results in an empirical score of five or more – A chemical is an eye irritant if so determined under the procedure listed in 16 CFR 1500.42 or other appropriate techniques
• A sensitizer	• It causes a substantial proportion of exposed people or animals to develop an allergic reaction in normal tissue after repeated exposure

Categories provided in Table 6 illustrate the broad range of target organ effects that must be considered when conducting hazard evaluations. Chemicals meeting Table 6 definitions, along with the criteria for established evidence in Table 3, must be regarded as hazardous.

Examples provided in Table 6 are **NOT** intended to be a complete list.

Table 6
Examples of Target Organ Effect Categories Category

Category	Definition	Examples of Signs and Symptoms	Examples of Chemicals
Hepatotoxins	Cause liver damage	• Jaundice • Liver enlargement	• Carbon tetrachloride • Nitrosamines
Nephrotoxins	Cause kidney damage	• Edema • Proteinuria	• Halogenated hydrocarbons • Cadmium
Neurotoxins	Cause primary toxic effects on the nervous system	• Narcosis • Behavioral changes • Decrease in motor functions	• Mercury • Carbon disulfide • Lead
Chemicals that act on the • Blood **OR** • Hematopoietic (blood forming) system	• Decrease hemoglobin function **OR** • Deprive the body tissues of oxygen	• Cyanosis • Loss of consciousness	• Carbon monoxide • Cyanides • Benzene
Chemicals that damage the lungs	• Irritate lungs **OR** • Damage pulmonary tissue	• Cough • Tightness in chest • Shortness of breath	• Silica • Asbestos
Reproductive toxins	Affect reproductive capabilities, including: • Chromosomal damage (mutation) • Effects on fetuses (teratogenesis)	• Birth defects • Sterility	• Lead • 1,2-Dibromo-3-chloropropane (DBCP) • Nitrous oxide
Cutaneous (skin) hazards	Affect the dermal layer of the body	• Defatting of the skin • Rashes • Irritation	• Ketones • Chlorinated compounds
Eye hazards	Affect the eye or ability to see	• Conjunctivitis • Corneal damage	• Organic solvents • Acids

Table 7
Criteria for Evaluating Chemical Mixtures

If a mixture	Then
• Has been thoroughly tested as a whole for a physical or health hazard	• You must use those results
• Has **NOT** been tested as a whole for a health hazard	• You must: – Evaluate **EACH** ingredient in the mixture to determine the hazards – Consider the mixture to have the same hazard as each ingredient determined to be hazardous
• Has **NOT** been tested as a whole for physical hazards	• You must: • Use any scientifically valid data available to evaluate the potential physical hazards of the mixture

[Statutory Authority: RCW 49.17.010, 49.17.040, 49.17.050, and 49.17.060. 03-10-068, § 296-307-56010, filed 5/6/03, effective 8/1/03.]

WAC 296-307-56015 Provide access to hazard evaluation procedures.

You must:

• Provide access to your written hazard evaluation procedures when requested by any of the following:

– Employees

– Designated representatives of employees

– Representatives of the department of labor and industries

– Representatives of the National Institute for Occupational Safety and Health (NIOSH).

[Statutory Authority: RCW 49.17.010, 49.17.040, 49.17.050, and 49.17.060. 03-10-068, § 296-307-56015, filed 5/6/03, effective 8/1/03.]

WAC 296-307-56020 Material safety data sheets.

Your responsibility:

To provide complete and accurate material safety data sheets (MSDSs).

You must:

Develop or obtain MSDSs

WAC 296-307-56025

Provide MSDSs

WAC 296-307-56030

Follow-up if an MSDS is not provided

WAC 296-307-56035.

[Statutory Authority: RCW 49.17.010, 49.17.040, 49.17.050, and 49.17.060. 03-10-068, § 296-307-56020, filed 5/6/03, effective 8/1/03.]

WAC 296-307-56025 Develop or obtain material safety data sheets (MSDSs).

You must:

• Develop or obtain a complete and accurate material safety data sheet (MSDS) for each hazardous chemical or mixture according to **ALL** of the following:

– **ALL** information in Table 8 must be completed. If there is no relevant information for a required item, this must be noted. Blank spaces are not permitted.

Note: • No specific format is required for MSDSs; however, an example format (OSHA form 174) can be found online at: http://www.osha.gov
• One MSDS can be developed for a group of complex mixtures (for example, jet fuels or crude oil) **IF** the health and physical hazards of the mixtures are similar (the amounts of chemicals in the mixture may vary).

– Content of MSDSs must accurately represent the available scientific evidence.

Note: You may report results of scientifically valid studies that tend to refute findings of hazards.

– MSDSs must be in English.

Note: You may develop copies of MSDSs in other languages.

You must:

• Revise an MSDS when you become aware of new and significant information regarding the hazards of a chemical, or how to protect against the hazards

– Within three months after you first become aware of the information

OR

– Before the chemical is reintroduced into the workplace if the chemical is no longer being used, produced or imported.

Table 8 Information Required on MSDSs
• The chemical's identity as it appears on the label
• The date the MSDS was prepared or updated
• A contact for additional information about the hazardous chemical and appropriate emergency procedures Include all of the following: – Name – Address – Telephone number of the responsible party preparing or distributing the MSDS
• The chemical's hazardous ingredients[1] as determined by your hazard evaluation – For a **single substance chemical,** include the chemical and common name(s) of the substance – For **mixtures** tested as a whole ■ Include the common name(s) of the mixture **AND** ■ List the chemical and common name(s) of ingredients that contribute to the known hazards – For **mixtures NOT** tested as a whole, list the chemical and common name(s) of hazardous ingredients ■ That make up 1% or more of the mixture, by weight or volume, including carcinogens (if 0.1% concentration or more, by weight or volume) – If ingredients are less than the above concentrations but may present a health risk to employees (for example, allergic reaction or exposure could exceed the permissible exposure limits, or PEL) they must be listed here
• Exposure limits for airborne concentrations. Include **ALL** of the following, when they exist: – WISHA or OSHA PELs[2] ■ The 8-hour time weighted average (TWA) ■ The short-term exposure limit (STEL), if available ■ Ceiling values, if available – Threshold limit values (TLVs) including 8-hour TWAs, STELs, and ceiling values – Other exposure limits used or recommended by the employer preparing the MSDS
• Physical and chemical characteristics – For example, boiling point, vapor pressure, and odor
• Fire, explosion data, and related information – For example, flashpoint, flammable and explosion limits, extinguishing media, and unusual fire or explosion hazards
• Physical hazards of the chemical including reactivity information – For example, incompatibilities, decomposition products, by-products, and conditions to avoid
• Health hazard information including **ALL** of the following: – Primary routes of exposure • For example, inhalation, ingestion, and skin absorption or other contact[3] – Health effects (or hazards) associated with: ■ Short-term exposure[4] **AND** ■ Long-term exposure[4] – Whether the chemical is listed or described as a carcinogen or potential carcinogen in the latest editions of each of the following: ■ The National Toxicology Program (NTP) Annual Report on Carcinogens **OR** ■ The International Agency for Research on Cancer (IARC) Monographs as a potential carcinogen **OR** ■ WISHA or OSHA rules – Signs and symptoms of exposure[5] – Medical conditions generally recognized as being aggravated by exposure
• Emergency and first-aid procedures
• Generally applicable precautions for safe handling and use known to the employer preparing the MSDS – For example, appropriate procedures for clean-up of spills and leaks, waste disposal method, precautions during handling and storing
• Generally applicable and appropriate control measures known to the employer preparing the MSDS, including **ALL** of the following: – Engineering controls (for example, general or local exhaust ventilation) – Work practices – Personal protective equipment (PPE) – Personal hygiene practices – Protective measures during repair and maintenance of contaminated equipment

[1]The identities of some chemicals may be protected as trade secret information (see chapter 296-62 WAC, Part B-1, Trade secrets).

[2]WISHA PEL categories are defined, and values are provided, in chapter 296-307 WAC, Part Y-6.

[3]A "skin notation" listed with either an ACGIH TLV or WISHA/OSHA PEL indicates that skin absorption is a primary route of exposure.

[4]Examples of:
• Short-term health effects (or hazards) include eye irritation, skin damage caused by contact with corrosives, narcosis, sensitization, and lethal dose.
• Long-term health effects (or hazards) include cancer, liver degeneration, and silicosis.

[5]Signs and symptoms of exposure to hazardous substances include those that:
• Can be measured such as decreased pulmonary function
AND
• Are subjective such as feeling short of breath.

[Statutory Authority: RCW 49.17.010, 49.17.040, 49.17.050, 49.17.060. 05-01-166, § 296-307-56025, filed 12/21/04, effective 4/2/05; 03-10-068, § 296-307-56025, filed 5/6/03, effective 8/1/03.]

WAC 296-307-56030 Provide MSDSs for products shipped, transferred or sold over-the-counter.

You must:

• Provide the correct MSDS to manufacturers, distributors and employers:

– With the initial shipment or transfer of the product

AND

– With the first shipment or transfer after an MSDS is updated

AND

– Whenever one is requested.

Note:
- MSDSs may be provided separately from containers as long as they are provided before or at the same time as the containers. For example, you may fax, or e-mail the MSDS
- You are **NOT** required to provide MSDSs to retailers who inform you they
  – Do not sell the product to commercial accounts

  AND

  – Do not open the sealed product containers for use in their workplace.

You must:

• Follow the requirements in Table 9 for chemicals sold over-the-counter.

Table 9
Requirements for Chemicals Sold Over-the-Counter (NOT Shipped)

If you are a	Then
• Retail distributor **WITH** commercial accounts	• Provide an MSDS to employers with commercial accounts when requested **AND** • Post a sign, or otherwise inform employers, that MSDSs are available
• Retail distributor **WITHOUT** commercial accounts	• Provide the employer, when requested, with **ALL** of the following: – Name – Address – Telephone number of the chemical manufacturer, importer, or distributor who can provide an MSDS
• Wholesale distributor selling products over-the-counter to employers	• Provide an MSDS to employers with commercial accounts when requested **AND** • Post a sign, or otherwise inform employers, that MSDSs are available

[Statutory Authority: RCW 49.17.010, 49.17.040, 49.17.050, and 49.17.060. 03-10-068, § 296-307-56030, filed 5/6/03, effective 8/1/03.]

WAC 296-307-56035 Follow-up if an MSDS is not provided.

You must:

• Obtain an MSDS from the chemical manufacturer, distributor or importer as soon as possible, if an MSDS is not provided for a shipment labeled as a hazardous chemical.

[Statutory Authority: RCW 49.17.010, 49.17.040, 49.17.050, and 49.17.060. 03-10-068, § 296-307-56035, filed 5/6/03, effective 8/1/03.]

WAC 296-307-56040 Labeling.

Your responsibility:

To provide employers with containers of hazardous chemicals that are properly labeled.

[Statutory Authority: RCW 49.17.010, 49.17.040, 49.17.050, and 49.17.060. 03-10-068, § 296-307-56040, filed 5/6/03, effective 8/1/03.]

WAC 296-307-56045 Label containers of hazardous chemicals.

Exemption: Containers are exempt from this section if **ALL** hazardous contents are listed in Table 11.

You must:

• Make sure every container of hazardous chemicals leaving the workplace is properly labeled. This includes **ALL** of the following:

– The identity of the hazardous chemical (the chemical or common name) that matches the identity used on the MSDS

– An appropriate hazard warning

– The name and address of the chemical manufacturer, importer, or other responsible party

– Make sure labeling does not conflict with the requirements of:

• The Hazardous Materials Transportation Act (49 U.S.C. 1801 et seq.)

AND

• Regulations issued under the act by the U.S. Department of Transportation (Title 49 of the Code of Federal Regulations, Parts 171 through 180). See http://www.dot.gov

– Revise labels within three months of becoming aware of new and significant information about chemical hazards

– Provide revised labels on containers beginning with the first shipment after a revision, to manufacturers, distributors or employers

– Revise the label when a chemical is not currently used, produced or imported, before:

• You resume shipping (or transferring) the chemical

OR

• The chemical is reintroduced in the workplace

– Label information

• Clearly written in English

AND

• Prominently displayed on the container.

Reference: Additional labeling requirements for specific hazardous chemicals (for example, asbestos, cadmium, and formaldehyde) are found in chapter 296-62 WAC, General occupational health standards (see parts F, G, I and I-1 of that chapter).

Note: When the conditions specified in Table 10 are met for the solid material products listed, you are not required to provide labels for every shipment.

Table 10
Labeling for Solid Materials

You need only send labels with the first shipment, IF the product is	And
Whole grain	• It is shipped to the same customer **AND** • No hazardous chemicals are part of or known to be present with the product which could expose employees during handling – For example, cutting fluids on solid metal, and pesticides with grain
Solid untreated wood	
Solid metal For example: Steel beams, metal castings	
Plastic items	

Exemptions: The chemicals (and items) listed in Table 11 are EXEMPT from THIS SECTION under the conditions specified. Requirements in other sections still apply.

Table 11
Conditional Label Exemptions

This section does not apply to	When the product is
• Pesticides – Meeting the definition of "pesticides" in the Federal Insecticide, Fungicide, and Rodenticide Act (FIFRA) (see Title 7, U.S.C. Chapter 6, Subchapter II, section 136[1]) **AND**	• Subject to – Labeling requirements of FIFRA[1] **AND** – Labeling regulations issued under FIFRA by the United States Environmental Protection Agency (EPA) (see Title 40 of the Code of Federal Regulations[2])
• A chemical substance or mixture – Meeting the definition of "chemical substance" or "mixture" in the Toxic Substance Control Act (TSCA) (see Title 15 U.S.C. Chapter 53, Subchapter II, Section 2602[1]) **AND**	• Subject to – Labeling requirements of TSCA[1] **AND** – Labeling requirements issued under TSCA by the EPA (see Title 40 of the Code of Federal Regulations[2])
• Each of the following – Food – Food additives – Color additives – Drugs – Cosmetics – Medical devices or products – Veterinary devices or products – Materials intended for use in these products (for example: Flavors, and fragrances) • As defined in – The Federal Food, Drug, and Cosmetic Act (see Title 21 U.S.C. Chapter 9, Subchapter II, Section 321[1]) **OR** – The Virus-Serum Toxin Act of 1913 (see Title 21 U.S.C. Chapter 5, Section 151 et seq.[1]) **OR** – Regulations issued under these acts (see Title 21 Part 101 in the Code of Federal Regulations, and Title 9, in the Code of Federal Regulations[3])	• Subject to: – Labeling requirements in Federal Food, Drug, and Cosmetic Act, Virus-Serum Toxin Act of 1913, and issued regulations enforced by the United States Food and Drug Administration (see Title 21 Parts 101-180 in the Code of Federal Regulations[3]) **OR** – Department of Agriculture (see Title 9, in the Code of Federal Regulations[3])
• Each of the following: – Distilled spirits (beverage alcohols) **AND** – Wine **AND** – Malt beverage • As defined in – The Federal Alcohol Administration Act (see Title 27 U.S.C. Section 201[1])	• Subject to: – Labeling requirements of Federal Alcohol Administration Act[1] **AND** – Labeling regulations issued under Federal Alcohol Administration Act by the Bureau of Alcohol, Tobacco, and Firearms (see Title 27 in the Code of Federal Regulations[3])

Table 11 Conditional Label Exemptions	
This section does not apply to	**When the product is**
AND – Regulations issued under this act (see Title 27 in the Code of Federal Regulations[3])	
• Consumer products **AND** • Hazardous substances – As defined in the Consumer Product Safety Act (see 15 U.S.C. 2051 et seq.[1]) **AND** – The Federal Hazardous Substances Act (see 15 U.S.C. 1261 et seq.[1])	• Subject to: – A consumer product safety or labeling requirement of the Consumer Product Safety Act or Federal Hazardous Substances Act[1] **OR** – Regulations issued under these acts by the Consumer Product Safety Commission (see Title 16 in the Code of Federal Regulations[3])
• Agricultural seed **AND** • Vegetable seed treated with pesticides	• Labeled as required by – The Federal Seed Act (see Title 7 U.S.C. Chapter 37 Section 1551 et seq.[1]) **AND** – Labeling requirements issued under Federal Seed Act by the United States Department of Agriculture[1]

[1]This federal act is included in the United States Code. See http://www.access.gpo.gov/uscode/uscmain.html.

[2]See http://www.epa.gov.

[3]See http://www.access.gpo.gov/nara/cfr/index.html.

[Statutory Authority: RCW 49.17.010, 49.17.040, 49.17.050, and 49.17.060. 03-10-068, § 296-307-56045, filed 5/6/03, effective 8/1/03.]

WAC 296-307-56050 Definitions. The following definitions apply to this chapter:

Article (manufactured item)

A manufactured item that

• Is not a fluid or particle

AND

• Is formed to a specific shape or design during manufacture for a particular end use function

AND

• Releases only trace amounts of a hazardous chemical during normal use and does not pose a physical or health risk to employees.

Chemical

• An element or mixture of elements

OR

• A compound or mixture of compounds

OR

• A mixture of elements and compounds

Included are manufactured items (such as bricks, welding rods and sheet metal) that are not exempt as an article.

Chemical name

• The scientific designation of a chemical developed by the

– International union of pure and applied chemistry (IUPAC)

OR

– Chemical abstracts service (CAS) rules of nomenclature

OR

• A name that clearly identifies the chemical for the purpose of conducting a hazard evaluation.

Combustible liquid

Liquids with a flashpoint of at least 100°F (37.8°C) and below 200°F (93.3°C). A mixture with at least 99% of its components having flashpoints of 200°F (93.3°C), or higher, is not considered a combustible liquid.

Commercial account

An arrangement where a retailer is selling hazardous chemicals to an employer

• Generally in large quantities over time

OR

• At costs below regular retail price.

Common name

Any designation or identification used to identify a chemical other than the chemical name, such as a

• Code name or number

OR

• Trade or brand name

OR

• Generic name.

Compressed gas

• A contained gas or mixture of gases with an absolute pressure greater than:

– 40 psi at 70°F (21.1°C)

OR

– 104 psi at 130°F (54.4°C) regardless of the pressure at 70°F (21.1°C)

OR

• A liquid with a vapor pressure greater than 40 psi at 100°F (37.8°C), as determined by ASTM D323-72.

Container

A vessel, other than a pipe or piping system, that holds a hazardous chemical. Examples include:

• Bags
• Barrels
• Bottles
• Boxes
• Cans

• Cylinders
• Drums
• Reaction vessels
• Storage tanks
• Rail cars.

Designated representative

• An individual or organization with written authorization from an employee

OR

• A recognized or certified collective bargaining agent (not necessarily authorized by an employee)

OR

• A legal representative of a deceased or legally incapacitated employee.

Distributor

A business that supplies hazardous chemicals to other employers. Included are employers who conduct retail and wholesale transactions.

Explosive

A chemical that causes a sudden, almost instant release of pressure, gas, and heat when exposed to a sudden shock, pressure, or high temperature.

Flammable

A chemical in one of the following categories:

• Aerosols that, when tested using a method described in 16 CFR 1500.45, yield either a:

– Flame projection of more than eighteen inches at full valve opening

OR

– A flashback (a flame extending back to the valve) at any degree of valve opening

• Gases that, at the temperature and pressure of the surrounding area, form a:

– Flammable mixture with air at a concentration of thirteen percent, by volume, or less

OR

– Range of flammable mixtures with air wider than twelve percent, by volume, regardless of the lower limit

• Liquids with a flashpoint below 100°F (37.8°C). A mixture with at least ninety-nine percent of its components having flashpoints of 100°F (37.8°C), or higher, is not considered a flammable liquid

• Solids, other than blasting agents or explosives, as defined in WAC 296-52-417 or 29 CFR 1910.109(a), that:

– Is likely to cause fire through friction, moisture, absorption, spontaneous chemical change or retained heat from manufacturing or processing

OR

– That can be readily ignited (and when ignited burns so vigorously and persistently that it creates a serious hazard)

OR

– When tested by the method described in 16 CFR 1500.44, ignite and burn with a self-sustained flame at a rate greater than 1/10th of an inch per second along its major axis.

Flashpoint

The minimum temperature at which a liquid gives off an ignitable concentration of vapor, when tested by any of the following measurement methods:

• Tagliabue closed tester. Use this for liquids with a viscosity less than 45 Saybolt Universal Seconds (SUS) at 100°F (37.8°C), that do not contain suspended solids and do not tend to form a surface film under test. See American National Standard Method of Test for Flashpoint by Tag Closed Tester, Z11.24-1979 (ASTM D 56-79)

• Pensky-Martens closed tester. Use this for liquids with a viscosity equal to, or greater than, 45 SUS at 100°F (37.8°C) or for liquids that contain suspended solids or have a tendency to form a surface film under test. See American National Standard Method of Test for Flashpoint by Pensky-Martens Closed Tester, Z11.7-1979 (ASTM D 93-79)

• Setaflash closed tester. See American National Standard Method of Test for Flashpoint by Setaflash Closed Tester (ASTM D 3278-78)

Organic peroxides, which undergo auto accelerating thermal decomposition, are excluded from any of the flashpoint measurement methods specified above.

Hazardous chemical

A chemical, which is a physical or health hazard.

Hazard warning

Words, pictures or symbols (alone or in combination) that appear on labels (or other forms of warning such as placards or tags) that communicate specific physical and health hazards (including target organ effects) associated with chemicals in a container.

Health hazard

A chemical that may cause health effects in short or long-term exposed employees based on statistically significant evidence from a single study conducted by using established scientific principles.

Health hazards include, but are not limited to, any of the following:

• Carcinogens
• Toxic or highly toxic substances
• Reproductive toxins
• Irritants
• Corrosives
• Sensitizers
• Hepatotoxins (liver toxins)
• Nephrotoxins (kidney toxins)
• Neurotoxins (nervous system toxins)
• Substances that act on the hematopoietic system (blood or blood forming system)
• Substances that can damage the lungs, skin, eyes, or mucous membranes.

Identity

A chemical or common name listed on the material safety data sheet (MSDS) and label.

Importer

The first business, within the Customs Territory of the United States, that receives hazardous chemicals produced in other countries and supplies them to manufacturers, distributors or employers within the United States.

Label

Written, printed, or graphic material displayed on, or attached to, a container of hazardous chemicals.

Manufacturer

An employer with a workplace where one or more chemicals (including items not exempt as "articles," see Table 1 in this part) are produced for use or distribution.

Material safety data sheet (MSDS)

Written, printed or electronic information (on paper, microfiche, or on-screen) that informs manufacturers, distributors or employers about the chemical, its hazards and protective measures as required by this rule.

Mixture

A combination of two or more chemicals that retain their chemical identify after being combined.

Organic peroxide

An organic compound containing the bivalent-O-O-structure. It may be considered a structural derivative of hydrogen peroxide if one or both of the hydrogen atoms has been replaced by an organic radical.

Oxidizer

A chemical, other than a blasting agent or explosive as defined in WAC 296-52-417 or 29 CFR 1910.109(a), that starts or promotes combustion in other materials, causing fire either of itself or through the release of oxygen or other gases.

Permissible exposure limits

See WAC 296-307-628, for definition of this term.

Physical hazards

A chemical that has scientifically valid evidence to show it is one of the following:

- A combustible liquid
- A compressed gas
- Explosive
- Flammable
- An organic peroxide
- An oxidizer
- Pyrophoric
- Unstable (reactive)
- Water-reactive.

Produce

To do one or more of the following:

- Manufacture
- Process
- Formulate
- Blend
- Extract
- Generate
- Emit
- Repackage.

Pyrophoric

Chemicals that ignite spontaneously in the air at a temperature of 130°F (54.4°C) or below.

Responsible party

Someone who can provide more information about the hazardous chemical and appropriate emergency procedures.

Retailer

See "distributor."

Threshold limit values (TLVs)

Airborne concentrations of substances established by the American Conference of Governmental Industrial Hygienists (ACGIH), and represent conditions under which it is believed that nearly all workers may be repeatedly exposed day after day without adverse health effects.

TLVs are specified in the most recent edition of the *Threshold Limit Values for Chemical Substances and Physical Agents and Biological Exposure Indices* and include the following categories:

- Threshold limit value-time-weighted average (TLV-TWA)
- Threshold limit value-short-term exposure limit (TLV-STEL)
- Threshold limit value-ceiling (TLV-C).

Unstable (reactive)

A chemical in its pure state, or as produced or transported, that will vigorously polymerize, decompose, condense, or become self-reactive under conditions of shocks, pressure or temperature.

Use

To do one or more of the following:

- Package
- Handle
- React
- Emit
- Extract
- Generate as a by-product
- Transfer.

Water-reactive

A chemical that reacts with water to release a gas that is either flammable or presents a heath hazard.

Wholesaler

See "distributor."

[Statutory Authority: RCW 49.17.010, 49.17.040, 49.17.050, 49.17.060. 05-01-166, § 296-307-56050, filed 12/21/04, effective 4/2/05; 03-10-068, § 296-307-56050, filed 5/6/03, effective 8/1/03.]

WAC 296-307-570 Lighting rule. Your responsibility: To provide an maintain adequate lighting in your workplace.

[Statutory Authority: RCW 49.17.010, [49.17].040, and [49.17].050. 01-17-033, § 296-307-570, filed 8/8/01, effective 9/1/01.]

WAC 296-307-57005 Provide and maintain adequate lighting.

Note: This section establishes minimal levels of lighting for safety purposes only. Guidelines pertaining to optimal levels of lighting and illumination may be found in Practice for Industrial Lighting, ANSI/IES RP7-1979.

You must:

- Provide and maintain adequate lighting for all work activities in your workplace. See the following table.

Lighting Table

Activity	Minimum Acceptable average lighting level in an area:	Any one single measurement used to determine the average lighting level* cannot be less than:
	(Foot-candles)	(Foot-candles)
Indoor task	10	5
Outdoor task	5	2.5
Nontask activities for both indoor and outdoor	3	1.5

- Lighting levels must be measured at thirty inches above the floor/working surface or at the task.

You must:

- Have adequate light for employees to see nearby objects that might be potential hazards or to see to operate

emergency controls or other equipment, if general lighting is not available.

Note: • Lighting levels can be measured with a light meter.
• Conversion information: 1 foot candle = 1 lumen incident per square foot = 10.76 lux.

[Statutory Authority: RCW 49.17.010, [49.17].040, and [49.17].050. 01-17-033, § 296-307-57005, filed 8/8/01, effective 9/1/01.]

WAC 296-307-590 Environmental tobacco smoke in the office. Your responsibility:

To control exposure to environmental tobacco smoke in your office work environment

You must:

Control tobacco smoke in your building

WAC 296-307-59005

Control tobacco smoke that comes in from the outside

WAC 296-307-59010

Note: This rule does not preempt any federal, state, municipal, or other local authority's regulation of indoor smoking that is more protective than this section.

Definitions: *Office work environment* is an indoor or enclosed occupied space where clerical work, administration, or business is carried out.

In addition, it includes:

• Other workplace spaces controlled by the employer and used by office workers, such as cafeterias, meeting rooms, and washrooms.

• Office areas of manufacturing and production facilities, not including process areas.

• Office areas of businesses such as food and beverage establishments, agricultural operations, construction, commercial trade, services, etc.

Smoking

A person is smoking if they are:

• Lighting up

• Inhaling

• Exhaling

• Carrying a pipe, cigar or cigarette of any kind that is burning.

[Statutory Authority: RCW 49.17.010, [49.17].040, and [49.17].050. 01-17-033, § 296-307-590, filed 8/8/01, effective 9/1/01.]

WAC 296-307-59005 Control tobacco smoke in your building.

EXEMPTION: The minimum criteria specified in this rule do not apply to outdoor structures provided for smokers such as gazebos or lean-tos.

You must:

• Prohibit smoking in your office work environment

OR

• Restrict smoking inside your office work environment to designated enclosed smoking rooms that meet the following minimum criteria:

– Identify smoking rooms clearly with signs.

– Make sure the designated smoking rooms are not in common areas, such as:

❖ Places where nonsmoking employees are required to work or visit

❖ Restrooms

❖ Washrooms

❖ Hallways

❖ Stairways

❖ Cafeterias/lunchrooms

❖ Meeting rooms

– Make sure that no employee is required to enter a designated smoking room while someone is smoking there.

– Conduct cleaning and maintenance work in designated smoking rooms when smokers are not present.

You must:

• Ventilate designated smoking rooms at a rate of at least 60 cubic feet per minute per smoker (calculated on the basis of the maximum number of smokers expected during the course of a normal working day), which can be supplied by transfer air from adjacent areas.

– Maintain enough negative air pressure in designated smoking areas to prevent smoke from migrating into nonsmoking areas, at all times.

– Operate a separate mechanical exhaust system in designated smoking rooms, to make sure exhausted air moves directly outside, and does not recirculate into nonsmoking areas.

– Prohibit use of the designated smoking room if the mechanical exhaust system is not working properly, until repairs are completed.

Note: This ventilation rate is recommended for occupancies of no more than 7 people for every 100 square feet of net occupied space in the designated smoking room.

[Statutory Authority: RCW 49.17.010, [49.17].040, and [49.17].050. 01-17-033, § 296-307-59005, filed 8/8/01, effective 9/1/01.]

WAC 296-307-59010 Control tobacco smoke that comes in from the outside. You must:

• Use engineering or administrative controls to minimize the amount of tobacco smoke that comes into your office(s) from outside the building.

– Make sure that outside smoking areas used by your employees are not close to doorways, air intakes, and other openings that may allow airflow directly into an office.

Note: By changing the way workers do their job, you can reduce work exposure to potential hazards. These changes are called administrative controls and include such things as:

– Job rotation

– Wetting down dusty areas

– Having employees shower after exposure to potentially harmful substances

– Maintaining equipment properly

– Cleaning up work areas to control the effect of potential hazards

Engineering controls let you plan or physically change the machinery or work environment to prevent employee exposure to potential hazards. This includes any modification of plant equipment, processes, or materials to reduce employees' exposure to toxic materials or harmful physical agents.

[Statutory Authority: RCW 49.17.010, [49.17].040, and [49.17].050. 01-17-033, § 296-307-59010, filed 8/8/01, effective 9/1/01.]

Part Y-3
Lighting

Part Y-4
Environmental Tobacco Smoke in the Office

Part Y-5
Respirators

WAC 296-307-594 Scope. This part applies to all use of respirators at work.

IMPORTANT:

Before you decide to use respirators, you are required to evaluate respiratory hazards and implement control methods

as outlined in WAC 296-307-624 through 296-307-628, Respiratory hazards.

The term "respiratory hazards" will be used throughout this part to refer to oxygen deficient conditions and harmful airborne hazards.

Definition:

Respirators are a type of personal protective equipment designed to protect the wearer from respiratory hazards.

You can use Table 1 for general guidance on which sections apply to you.

Table 1
Sections that apply to your workplace

If employees...	**Then the sections marked with an "X" apply...**					
	596	598	600	602-618	620	622
Request and are **permitted** to voluntarily use filtering-facepiece respirators, and are not exposed to a respiratory hazard		X				X
Request and are **permitted** to voluntarily use respirators that are **NOT** filtering-facepiece respirators, and are not exposed to a respiratory hazard	X	X			X	X
Are **required** to use any respirator by WISHA or the employer	X		X	X	X	X
Would use an **escape respirator** in an emergency	X		X	X	X	X

Reference: See WAC 296-307-100, Personal protective equipment (PPE) to find requirements for other types of personal protective equipment (PPE), such as eye, hand, and head protection.

[Statutory Authority: RCW 49.17.010, 49.17.040, 49.17.050, 49.17.060. 05-01-166, § 296-307-594, filed 12/21/04, effective 4/2/05.]

WAC 296-307-596 Respirator program administrator.

Your responsibility:

To make sure a capable individual is in charge of respirator program development and management.

[Statutory Authority: RCW 49.17.010, 49.17.040, 49.17.050, 49.17.060. 05-01-166, § 296-307-596, filed 12/21/04, effective 4/2/05.]

WAC 296-307-59605 Designate a program administrator.

Exemption: You do not need to designate a program administrator if employees use only filtering-facepiece respirators and do so only as voluntary use.

Definition:

Voluntary use is respirator use that is requested by the employee AND permitted by the employer when **NO** respiratory hazard exists.

You must:

• Designate a program administrator who has overall responsibility for your program and has sufficient training or experience to:

– Oversee program development and coordinate implementation

– Conduct required evaluations of program effectiveness outlined in WAC 296-307-60005.

[Statutory Authority: RCW 49.17.010, 49.17.040, 49.17.050, 49.17.060. 05-01-166, § 296-307-59605, filed 12/21/04, effective 4/2/05.]

WAC 296-307-598 Voluntary respirator use requirements. Your responsibility:

To make sure voluntary use of respirators by employees does not create job safety or health hazards.

You must:

Make sure voluntary use of respirators is safe
WAC 296-307-59805

Keep voluntary use respirator program records
WAC 296-307-59810.

IMPORTANT:

• Respirator use is NOT voluntary if a respiratory hazard, such as exposure to a substance over the permissible exposure limit (PEL) or hazardous exposure to an airborne biological hazard, is present.

• To evaluate respiratory hazards in your workplace, see WAC 296-307-624, Respiratory hazards.

• Some requirements in this section do not apply if only filtering-facepiece respirators are used voluntarily. Some filtering-facepiece respirators are equipped with a sorbent layer for absorbing "nuisance" organic vapors. These can be used for voluntary use, but are not NIOSH certified for protection against hazardous concentrations of organic vapor.

[Statutory Authority: RCW 49.17.010, 49.17.040, 49.17.050, 49.17.060. 05-01-166, § 296-307-598, filed 12/21/04, effective 4/2/05.]

WAC 296-307-59805 Make sure voluntary use of respirators is safe.

Definition:

Voluntary use is respirator use that is requested by the employee AND permitted by the employer when **NO** respiratory hazard exists.

IMPORTANT: If you choose to require respirator use, use is NOT voluntary and the required use sections of this part apply.

You must:

(1) Make sure voluntary respirator use does **NOT:**

• Interfere with an employee's ability to work safely, such as restricting necessary vision or radio communication

OR

• Create health hazards.

Note: Examples of health hazards include:
• Skin irritation, dermatitis, or other health effects caused by using a dirty respirator
• Illness created by sharing contaminated respirators
• Health effects caused by use of an unsafe air supply, such as carbon monoxide poisoning.

You must:

(2) Provide all voluntary respirator users with the advisory information in Table 2 at no cost to them.

Note: If you have provided employees with the advisory information required in the previous section, WAC 296-307-598, you do not need to provide the additional information in Table 2 to those employees.

You must:

(3) Develop and maintain a written program that includes the following:

• Medical evaluation provisions as specified in WAC 296-307-604.

• Procedures to properly clean and disinfect respirators, according to WAC 296-307-62015, if they are reused.

• How to properly store respirators, according to WAC 296-307-61010, so that using them does not create hazards.

• Procedures to make sure there is a safe air supply, according to WAC 296-307-616, when using air-line respirators and SCBAs.

• Training according to WAC 296-307-608 when necessary to ensure respirator use does NOT create a hazard.

Note: • Pay for medical evaluations, training, travel related costs, and wages. You do **NOT** need to pay for respirators employees use only voluntarily.

• If you have both voluntary and required respirator users, you may choose to treat voluntary users as required users. Doing this exceeds the requirements in this section.

Exemption: If employees use only filtering-facepiece respirators and do so only voluntarily, you do not need to develop and maintain a written program.

Use Table 2 to provide information to employees who voluntarily use any type of respirator.

Table 2

Advisory Information for Employees Who Voluntarily Use Respirators
• Respirators protect against airborne hazards when properly selected and used. WISHA recommends voluntary use of respirators when exposure to substances is below WISHA permissible exposure limits (PELs) because respirators can provide you an additional level of comfort and protection. • If you choose to voluntarily use a respirator (whether it is provided by you or your employer) be aware that **respirators can create hazards for you,** the user. You can avoid these hazards if you know how to use your respirator properly AND how to keep it clean. Take these steps: – Read and follow all instructions provided by the manufacturer about use, maintenance (cleaning and care), and warnings regarding the respirator's limitations. – Choose respirators that have been certified for use to protect against the substance of concern. The National Institute for Occupational Safety and Health (NIOSH) certifies respirators. If a respirator is not certified by NIOSH, you have no guarantee that it meets minimum design and performance standards for workplace use. ■ A NIOSH approval label will appear on or in the respirator packaging. It will tell you what protection the respirator provides. – Keep track of your respirator so you do not mistakenly use someone else's. – **DO NOT** wear your respirator into: ■ Atmospheres containing hazards that your respirator is not designed to protect against. For example, a respirator designed to filter dust particles will not protect you against solvent vapor, smoke or oxygen deficiency. ■ Situations where respirator use is required.

[Statutory Authority: RCW 49.17.010, 49.17.040, 49.17.050, 49.17.060. 05-01-166, § 296-307-59805, filed 12/21/04, effective 4/2/05.]

WAC 296-307-59810 Keep voluntary use program records.

Exemption: If employees use only filtering-facepiece respirators voluntarily, you do not need to follow these recordkeeping requirements.

You must:

• Keep copies of:

– Your current written respirator program

– Written recommendations from the LHCP

• Allow records required by this section to be examined and copied by affected employees and their representatives.

[Statutory Authority: RCW 49.17.010, 49.17.040, 49.17.050, 49.17.060. 05-01-166, § 296-307-59810, filed 12/21/04, effective 4/2/05.]

WAC 296-307-600 Written respirator program and recordkeeping.

Your responsibility:

To develop, implement, and maintain a written program that provides clear instruction for safe and reliable respirator use.

You must:

Develop and maintain a written program
WAC 296-307-60005

Keep respirator program records
WAC 296-307-60010.

[Statutory Authority: RCW 49.17.010, 49.17.040, 49.17.050, 49.17.060. 05-01-166, § 296-307-600, filed 12/21/04, effective 4/2/05.]

WAC 296-307-60005 Develop and maintain a written program.

Exemption: This section does **NOT** apply to respirator use that is voluntary. See WAC 296-307-59805 for voluntary use program requirements.

You must:

(1) Develop a complete worksite-specific written respiratory protection program that includes the applicable elements listed in Table 3.

Note: Pay for respirators, medical evaluations, fit testing, training, maintenance, travel costs, and wages.

You must:

(2) Keep your program current and effective by evaluating it and making corrections. Do ALL of the following:

• Make sure procedures and program specifications are followed and appropriate.

• Make sure selected respirators continue to be effective in protecting employees. For example:

– If changes in work area conditions, level of employee exposure, or employee physical stress have occurred, you need to reevaluate your respirator selection.

• Have supervisors periodically monitor employee respirator use to make sure employees are using them properly.

• Regularly ask employees required to use respirators about their views concerning program effectiveness and whether they have problems with:

– Respirator fit during use

– Any effects of respirator use on work performance

– Respirators being appropriate for the hazards encountered

– Proper use under current worksite conditions

– Proper maintenance.

When developing your written program include applicable elements listed in Table 3.

Table 3

Required Elements for Required-Use Respirator Programs
• Selection: – Procedures for respirator selection – A list specifying the appropriate respirator for each respiratory hazard in your workplace – Procedures for issuing the proper type of respirator, if appropriate
• Medical evaluation provisions
• Fit-test provisions and procedures, if tight-fitting respirators are selected
• Training provisions that address: – Respiratory hazards encountered during: ■ Routine activities ■ Infrequent activities, for example, bimonthly cleaning of equipment ■ Reasonably foreseeable emergencies, for example, rescue, spill response, or escape situations – Proper use of respirators, for example, how to put on or remove respirators, and use limitations. **Note:** You do NOT need to repeat training on respiratory hazards if employees have been trained on this in compliance with other rules such as WAC 296-307-550, employer chemical hazard communication.
• Respirator use procedures for: – Routine activities – Infrequent activities – Reasonably foreseeable emergencies
• Maintenance: – Procedures and schedules for respirator maintenance covering: ■ Cleaning and disinfecting ■ Storage ■ Inspection and repair ■ When to discard respirators – A cartridge or canister change schedule **IF** air-purifying respirators are selected for use against gas or vapor contaminants AND an end-of-service-life-indicator (ESLI) is not available. In addition, provide: ■ The data and other information you relied on to calculate change schedule values (for example, highest contaminant concentration estimates, duration of employee respirator use, expected maximum humidity levels, user breathing rates, and safety factors)
• Procedures to ensure a safe air quantity and quality **IF** atmosphere-supplying respirators (air-line or SCBA) are selected
• Procedures for evaluating program effectiveness on a regular basis

[Statutory Authority: RCW 49.17.010, 49.17.040, 49.17.050, 49.17.060. 05-01-166, § 296-307-60005, filed 12/21/04, effective 4/2/05.]

WAC 296-307-60010 Keep respirator program records.

You must:

• Keep the following records:

– Your current respirator program

– Each employee's current fit test record, if fit testing is conducted. Fit test records must include:

■ Employee name

■ Test date

■ Type of fit-test performed

■ Description (type, manufacturer, model, style, and size) of the respirator tested

■ Results of fit tests, for example, for quantitative fit tests include the overall fit factor AND a print out, or other recording of the test.

– Training records that include employee's names and the dates trained

– Written recommendations from the LHCP.

• Allow records required by this section to be examined and copied by affected employees and their representatives.

[Statutory Authority: RCW 49.17.010, 49.17.040, 49.17.050, 49.17.060. 05-01-166, § 296-307-60010, filed 12/21/04, effective 4/2/05.]

WAC 296-307-602 Respirator selection.

Your responsibility:

To select and provide respirators that are appropriate for the hazard, user, and worksite conditions.

Exemption: This section does NOT apply to voluntary respirator use. See WAC 296-307-598 of this part for voluntary use program requirements.

[Statutory Authority: RCW 49.17.010, 49.17.040, 49.17.050, 49.17.060. 05-01-166, § 296-307-602, filed 12/21/04, effective 4/2/05.]

WAC 296-307-60205 Select and provide appropriate respirators.

IMPORTANT:

See WAC 296-307-624, Respiratory hazards, for:

• Hazard evaluation requirements. Evaluation results are necessary for respirator selection.

• A list of substance-specific rules that may also apply to you. Those listed rules have additional respirator selection requirements.

You must:

• Select and provide, at no cost to employees, appropriate respirators for routine use, infrequent use, and reasonably foreseeable emergencies (such as escape, emergency, and spill response situations) by completing the following process:

Respirator Selection Process

Step 1: If your only respirator use is for escape, skip to **Step 8** to select appropriate respirators.

Step 2: If the respiratory hazard is a biological aerosol, such as TB (tuberculosis), anthrax, psittacosis (parrot fever), or hanta virus, select a respirator appropriate for **nonemergency** activities recognized to present a health risk to workers AND skip to **Step 8.**

• If respirator use will occur during **emergencies,** skip to **Step 8** and document the analysis used to select the appropriate respirator.

• Use Centers for Disease Control (CDC) selection guidance for exposures to specific biological agents when this guidance exists. Visit http://www.cdc.gov.

Step 3: If the respiratory hazard is a pesticide, follow the respirator specification on the pesticide label AND skip to **Step 9.**

Step 4: Determine the expected exposure concentration for each respiratory hazard of concern. Use the results from the evaluation required by WAC 296-307-624, Respiratory hazards.

Step 5: Determine if the respiratory hazard is classified as IDLH; if it is NOT IDLH skip to **Step 7.**

• The respiratory hazard **IS** classified as IDLH if:

– The atmosphere is oxygen deficient or oxygen enriched

OR

– You CANNOT measure or estimate your expected exposure concentration

OR

– Your measured or estimated expected exposure concentration is greater or equal to the IDLH value in the NIOSH *Pocket Guide to Chemical Hazards*

Note:
- WISHA uses the IDLH values in the 1990 edition of the NIOSH *Pocket Guide to Hazardous Chemicals* to determine the existence of IDLH conditions. You may use more recent editions of this guide. Visit www.cdc.gov/niosh for more information.
- If your measured or estimated expected exposure concentration is below NIOSH's IDLH values, proceed to **Step 7.**

Step 6: Select an appropriate respirator from one of the following respirators for IDLH conditions and skip to **Step 8:**

• Full-facepiece, pressure demand, self-contained breathing apparatus (SCBA) certified by NIOSH for a minimum service life of thirty minutes

OR

• Full-facepiece, pressure demand air-line respirator equipped with an auxiliary self-contained air supply

Exception: If the respiratory hazard is oxygen deficiency AND you can show oxygen concentrations can be controlled within the ranges listed in Table 4 under ALL foreseeable conditions, you are allowed to select **ANY** type of SCBA or air-line respirator.

Table 4
Concentration Ranges for Oxygen Deficiency

Altitude (as ft. above sea level)	**Oxygen Concentration Range** (as percent oxygen)
Below 3,001	16.0 - 19.5
3,001 - 4,000	16.4 - 19.5
4,001 - 5,000	17.1 - 19.5
5,001 - 6,000	17.8 - 19.5
6,001 - 8,000	19.3 - 19.5
Above 8,000 feet the exception does not apply.	

Step 7: Identify respirator types with assigned protection factors (APFs) from Table 5 that are appropriate to protect employees from the expected exposure concentration.

Step 8: Consider hazards that could require selection of specific respirator types. For example, select full-facepiece respirators to prevent eye irritation or abrasive blasting helmets to provide particle rebound protection.

Step 9: Evaluate user and workplace factors that might compromise respirator performance, reliability or safety.

• If the respiratory hazard is a pesticide, follow the requirements on the pesticide label and skip to **Step 11.**

Examples:

• High humidity or temperature extremes in the workplace.

• Necessary voice communication.

• High traffic areas and moving machinery.

• Time or distance for escape.

Step 10: Follow Table 6 requirements to select an air-purifying respirator.

• If Table 6 requirements cannot be met, you must select an air-line respirator or an SCBA.

Step 11: Make sure respirators you select are certified by the National Institute for Occupational Safety and Health (NIOSH).

• To maintain certification, make sure the respirator is used according to cautions and limitations specified on the NIOSH approval label.

Note: While selecting respirators, you will need to select a sufficient number of types, models or sizes to provide for fit testing. You can also consider other respirator use issues, such as accommodating facial hair with a loose fitting respirator.

Use Table 5 to identify the assigned protection factor for different types of respirators.

Table 5
Assigned Protection Factors (APF) for Respirator Types

If the respirator is a(n) . . .	**Then the APF is . . .**
Air-purifying respirator with a:	
• Half-facepiece	10
• Full-facepiece	100
Note: Half-facepiece includes 1/4 masks, filtering facepieces, and elastomeric facepieces.	

If the respirator is a(n) . . .	Then the APF is . . .
Powered air-purifying respirator (PAPR) with a:	
• Loose-fitting facepiece	25
• Half-facepiece	50
• Full-facepiece, equipped with HEPA filters, chemical cartridges or canisters	1000
• Hood or helmet, equipped with HEPA filters, chemical cartridges or canisters	1000
Air-line respirator with a:	
• Half-facepiece and designed to operate in demand mode	10
• Loose-fitting facepiece and designed to operate in continuous flow mode	25
• Half-facepiece and designed to operate in continuous-flow, or pressure-demand mode	50
• Full-facepiece and designed to operate in demand mode	100
• Full-facepiece and designed to operate in continuous-flow OR pressure-demand mode	1000
• Helmet or hood and designed to operate in continuous-flow mode	1000
Self-contained breathing apparatus (SCBA) with a tight fitting:	
• Half-facepiece and designed to operate in demand mode	10
• Full-facepiece and designed to operate in demand mode	100
• Full-facepiece and designed to operate in pressure-demand mode	10,000
Combination respirators:	
• Find the APF for each type of respirator in the combination.	The lowest value
• Use the lower APF to represent the combination.	

Use Table 6 to select air-purifying respirators for particle, vapor, or gas contaminants.

Table 6
Requirements for Selecting Any Air-purifying Respirator

If the contaminant is a . . .	Then . . .
• Gas OR vapor	• Provide a respirator with canisters or cartridges equipped with a NIOSH-certified, end-of-service-life indicator (ESLI) **OR** • If a canister or cartridge with an ESLI is NOT available, develop a cartridge change schedule to make sure the canisters or cartridges are replaced before they are no longer effective **OR** • Select an atmosphere-supplying respirator
• Particle, such as a dust, spray, mist, fog, fume, or aerosol	• Select respirators with filters certified to be at least 95% efficient by NIOSH – For example, N95s, R99s, P100s, or High Efficiency Particulate Air filters (HEPA) **OR** • You may select respirators NIOSH certified as "dust and mist," "dust, fume, or mist," OR "pesticides." You can only use these respirators if particles primarily have a mass median aerodynamic diameter of at least two micrometers. **Note:** These respirators are no longer sold for occupational use.

[Statutory Authority: RCW 49.17.010, 49.17.040, 49.17.050, 49.17.060. 05-01-166, § 296-307-60205, filed 12/21/04, effective 4/2/05.]

WAC 296-307-604 Medical evaluations.

Your responsibility:

To make sure a respirator used under your specific worksite conditions is not a health risk to employees.

Exemption: This section does **NOT** apply to employees who **only** use:

- Filtering-facepiece respirators voluntarily. See WAC 296-307-598 of this part for voluntary use requirements

  OR

- Escape-only respirators that are mouthpiece, loose-fitting, or hooded respirators.

IMPORTANT:

• Using a respirator can create physical risks for an employee each time it is worn. The extent of these risks depends on these factors:

– Type of respirator

– Environmental conditions at the worksite

– Physical demands of the work

– Use of other protective clothing

– Employee's health status.

[Statutory Authority: RCW 49.17.010, 49.17.040, 49.17.050, 49.17.060. 05-01-166, § 296-307-604, filed 12/21/04, effective 4/2/05.]

WAC 296-307-60405 Provide medical evaluations.

IMPORTANT:

If you have provided an employee with a medical evaluation addressing respirator use, as required by another chapter, that evaluation will meet the requirements of this section.

You must:

• Follow the medical evaluation process, Steps 1 through 7 in this section, to provide medical evaluations for employees at no cost to them.

Medical Evaluation Process

Step 1: Identify employees who need medical evaluations AND determine the frequency of evaluations from Table 7. Include employees who:

• Are required to use respirators

OR

• Voluntarily use respirators that are **not** filtering-facepiece respirators

Note: You may use a previous employer's medical evaluation for an employee if you can:
- Show the employee's previous work and use conditions were substantially similar to yours

AND
- Obtain a copy of the licensed healthcare professional's (LHCP's) written recommendation approving the employee's use of the respirator chosen by you.

Step 2: Identify a licensed healthcare professional (LHCP) to perform your medical evaluations.

Note: If you select a different LHCP, you do not need to have new medical evaluations done.

Step 3: Make sure your LHCP has the following information **before** the evaluation is completed:

• Information describing the respirators employees may use, including the weight and type.

• How the respirators will be used, including:

– How often the respirator will be used, for example, daily, or once a month

– The duration of respirator use, for example, a minimum of one hour, or up to twelve hours

– The employee's expected physical work effort

– Additional personal protective clothing and equipment to be worn

– Temperature and humidity extremes expected during use

• A copy of your written respiratory protection program **and** this part.

Note:
- You may choose to send the questionnaire to the LHCP ahead of time, giving time to review it and add any necessary questions
- The LHCP determines what questions to add to the questionnaire, if any; however, questions in Parts 1-3 may not be deleted or substantially altered.

Step 4: Administer the medical questionnaire in WAC 296-307-61605 to employees, OR provide them a medical exam that obtains the same information.

Note: You may use on-line questionnaires if the questions are the same and requirements of this section are met.

• Administer the examination or questionnaire at no cost to employees:

– During the employee's normal working hours

OR

– At a time and place convenient to the employee

• Maintain employee confidentiality during examination or questionnaire administration:

– Do **not** view employee's answers on the questionnaire

– Do **not** act in a manner that may be considered a breach of confidentiality

Note: Providing confidentiality is important for securing successful medical evaluations. It helps make sure the LHCP gets complete and dependable answers on the questionnaire.

• Make sure employees understand the content of the questionnaire.

• Provide the employee with an opportunity to discuss the questionnaire or exam results with the LHCP.

Step 5: Provide follow-up evaluation for employees when:

• The LHCP needs more information to make a final recommendation

OR

• An employee gives any positive response to questions 1-8 in Part 2 OR to questions 1-6 in Part 3 of the WISHA medical evaluation questionnaire in WAC 296-307-61605.

Note: Follow-up may include:
- Employee consultation with the LHCP such as a telephone conversation to evaluate positive questionnaire responses
- Medical exams
- Medical tests or other diagnostic procedures.

Step 6: Obtain a written recommendation from the LHCP that contains only the following medical information:

• Whether or not the employee is medically able to use the respirator

• Any limitations of respirator use for the employee

• What future medical evaluations, if any, are needed

• A statement that the employee has been provided a copy of the written recommendation.

Step 7: Provide a powered, air-purifying respirator (PAPR) when the LHCP determines the employee should not wear a negative-pressure air-purifying respirator **AND** is able to wear a PAPR.

Reference: See WAC 296-307-602 for requirements regarding selection of air-purifying respirators.

Note:
- You may discontinue medical evaluations for an employee when the employee no longer uses a respirator.
- If you have staff conducting your medical evaluations, they may keep completed questionnaires and findings as confidential medical records, if they are maintained separately from other records.

Use Table 7 to determine medical evaluation frequency.

Table 7
Evaluation Frequency

Type of Evaluation:	When required:
Initial medical evaluations	• Before respirators are fit-tested or used in the workplace.
Subsequent medical evaluations	• If any of these occur: – Your licensed healthcare professional (LHCP) recommends them; for example, periodic evaluations at specified intervals. – A respirator program administrator or supervisor informs you that an employee needs reevaluation. – Medical signs or symptoms (such as breathing difficulties) are: ■ Observed during fit-testing or program evaluation **OR** ■ Reported by the employee – Changes in worksite conditions such as physical work effort, personal protective clothing, or temperature that could substantially increase the employee's physiological stress.

[Statutory Authority: RCW 49.17.010, 49.17.040, 49.17.050, 49.17.060. 05-01-166, § 296-307-60405, filed 12/21/04, effective 4/2/05.]

WAC 296-307-606 Fit testing.

Your responsibility:

To make sure negative and positive-pressure tight-fitting respirators can provide an adequate fit and acceptable level of comfort to employees.

Exemption: This section does **NOT** apply to any respirators that are:
- Voluntarily used. See WAC 296-307-598 for voluntary use requirements.
- Mouthpiece respirators.

IMPORTANT:

• Fit testing is an activity where the seal of a respirator is tested to determine if it is adequate.

• This section covers general **requirements** for fit testing. Fit-testing **procedures** are covered in WAC 296-307-62010 of this part.

[Statutory Authority: RCW 49.17.010, 49.17.040, 49.17.050, 49.17.060. 05-01-166, § 296-307-606, filed 12/21/04, effective 4/2/05.]

WAC 296-307-60605 Conduct fit testing.

You must:

• Provide, at no cost to the employee, fit tests for ALL tight fitting respirators on the following schedule:

– Before employees are assigned duties that may require the use of respirators

– At least every twelve months after initial testing

– Whenever any of the following occurs:

■ A different respirator facepiece is chosen such as a different type, model, style, or size

■ You become aware of a physical change in an employee that could affect respirator fit. For example, you may observe, or be told about, facial scarring, dental changes, cosmetic surgery, or obvious weight changes

■ An employee notifies you, or your LHCP, that the respirator fit is unacceptable. During the retest, you must give an employee reasonable opportunity to select a different respirator facepiece (size, model, etc.).

Note: You may accept a fit test completed by a previous employer **IF:**
- You obtain written documentation of the fit test

AND
- The results of the fit test are not more than twelve months old

AND
- The employee will use the same respirator (the same type, model, style, and size)

AND
- The fit test was conducted in a way that meets the requirements of WAC 296-307-606 and 296-307-62010.

You must:

• Select an appropriate fit-testing procedure from WAC 296-307-62010 of this part AND:

– Use quantitative fit-test methods when a negative pressure respirator will be used in concentrations requiring a protection factor greater than 10. This includes:

■ Full facepiece air-purifying respirators

■ SCBAs operated in demand (negative pressure) mode

■ Air-line respirators operated in demand mode.

– Make sure PAPRs, SCBAs, or air-line respirators are fit tested in negative-pressure mode.

• Make sure the person conducting fit testing is able to do ALL of the following:

– Prepare test solutions if required

– Make sure equipment works properly

– Perform tests properly

– Recognize invalid tests

– Calculate fit factors properly if required.

Note:
- No specific training program or certification is required for those who conduct fit tests.
- You should consider evaluating these individuals to determine their proficiency in the fit-testing method to be used.
- You can use an evaluation form such as the form included in the American National Standard for Respirator Fit Testing Methods, ANSI/AIHA Z88.10-2001 to determine if the individual meets these requirements. Visit www.ansi.org or www.aiha.org.

[Statutory Authority: RCW 49.17.010, 49.17.040, 49.17.050, 49.17.060. 05-01-166, § 296-307-60605, filed 12/21/04, effective 4/2/05.]

WAC 296-307-608 Training.

Your responsibility:

To make sure employees who are required to use respirators understand and can demonstrate proper respirator use and maintenance.

IMPORTANT:

This section applies to employees who voluntarily use respirators only when training is necessary to prevent the respirator from creating a hazard. See WAC 296-307-598 for voluntary use requirements.

[Statutory Authority: RCW 49.17.010, 49.17.040, 49.17.050, 49.17.060. 05-01-166, § 296-307-608, filed 12/21/04, effective 4/2/05.]

WAC 296-307-60805 Provide effective training.

You must:

• Train employees, based on their duties, if they do any of the following:

– Use respirators

– Supervise respirator users

– Issue, repair, or adjust respirators

• Present effective training in a way that employees understand.

Note:
- Training may be provided using audiovisuals, slide presentations, formal classroom instruction, informal discussions during safety meetings, training programs conducted by outside sources, or a combination of these methods.
- You may want to have instructors available when using video or automated training methods to:
  - Encourage and provide responses to questions for the benefit of employees
  - Evaluate employees' understanding of the material
  - Provide other instructional interaction to employees.

You must:

• Make sure a qualified instructor provides training

• Provide training, at no cost to the employee, at these times:

– Initially, before worksite respirator use begins

– Periodically, within twelve months of the previous training

– Additionally, when the following occur:

■ The employee has not retained knowledge or skills

OR

■ Changes in the worksite, or type of respirator make previous training incomplete or obsolete.

Note:
- You may accept an employee's previous training, such as training provided by another employer, to satisfy the initial training requirement if:
  - You can demonstrate the employee received training within the past twelve months

  AND
  - The employee can demonstrate the knowledge and skills to use required respirators effectively.
- If you accept an employee's previous training to satisfy the initial training requirement, you are still responsible for providing periodic, and additional training when needed. Periodic training would need to be provided within twelve months of the employee's previous training.

You must:

• Make sure employees can demonstrate the following knowledge and skills as required by their duties:

– Why the respirator is necessary. Include, for example, information identifying respiratory hazards such as hazardous chemicals, the extent of the employee's exposure, and potential health effects and symptoms

– The respirator's capabilities and limitations. Include, for example, how the respirator provides protection and why air-purifying respirators cannot be used in oxygen-deficient conditions

– How improper fit, use, or maintenance can compromise the respirator's effectiveness and reliability

– How to properly inspect, put on, seal check, use, and remove the respirator

– How to clean, disinfect, repair, and store the respirator, or how to get this done by someone else

– How to use the respirator effectively in emergency situations; including what to do when a respirator fails and where emergency respirators are stored

– Medical signs and symptoms that may limit or prevent the effective use of respirators such as shortness of breath or dizziness

– The employer's general obligations under this part. For example, developing a written program, selecting appropriate respirators, and providing medical evaluations.

[Statutory Authority: RCW 49.17.010, 49.17.040, 49.17.050, 49.17.060. 05-01-166, § 296-307-60805, filed 12/21/04, effective 4/2/05.]

WAC 296-307-610 Maintenance.

Your responsibility:

To make sure respirators are maintained so they will function properly and not create health hazards such as skin irritation.

You must:

Maintain respirators in a clean and reliable condition

WAC 296-307-61005

Store respirators properly

WAC 296-307-61010

Inspect and repair respirators

WAC 296-307-61015

IMPORTANT:

This section applies to employees who voluntarily use respirators only when maintenance is necessary to prevent the respirator from creating a hazard. See WAC 296-307-598 for voluntary use requirements.

[Statutory Authority: RCW 49.17.010, 49.17.040, 49.17.050, 49.17.060. 05-01-166, § 296-307-610, filed 12/21/04, effective 4/2/05.]

WAC 296-307-61005 Maintain respirators in a clean and reliable condition.

You must:

• Make sure respirators are kept, at no cost to the employee, clean, sanitary and in good working order. Do at least the following:

– Clean and disinfect respirators as often as specified in Table 8 of this section.

Note:
- Use required cleaning and disinfecting procedures in WAC 296-307-62015, **or** the manufacturer's procedures that:
  - Result in a clean and sanitary respirator
  - Do not damage the respirator
  - Do not harm the user
- Automated cleaning and disinfecting are permitted
- Cleaning and disinfecting may be done by a central facility as long as you make sure respirators provided are clean, sanitary, and function properly.

You must:

• Make sure respirators are assembled properly after cleaning or disinfecting.

Use Table 8 to determine how often to clean and disinfect respirators.

Table 8
Required Frequencies for Cleaning and Disinfecting Respirators

If, the respirator will be . . .	Then, clean and disinfect the respirator . . .
• **Used exclusively** by one employee	• As often as needed to: – Keep it clean and functional **AND** – To prevent health hazards such as skin irritation
• Shared for nonemergency use **OR** • Used for fit-testing or training	• **Before** it is worn by another employee
• Shared for emergency use	• **After** each use so the respirator is immediately ready for use at all times

[Statutory Authority: RCW 49.17.010, 49.17.040, 49.17.050, 49.17.060. 05-01-166, § 296-307-61005, filed 12/21/04, effective 4/2/05.]

WAC 296-307-61010 Store respirators properly.

You must:

• Store respirators to protect them from ALL of the following:

– Deformation of the facepiece or exhalation valve

– Sunlight or extreme temperatures or other conditions

– Contamination such as dust or damaging chemicals

– Excessive moisture.

Note: Use coffee cans, sealable plastic bags, or other suitable means of protection.

You must:

• Follow these additional requirements for emergency respirators:

– Keep respirators accessible to the work area

– Store respirators in compartments or with covers clearly marked as containing emergency respirators

– Follow additional storage instructions from the respirator manufacturer

– Store an adequate number of emergency respirators in each area where they may be needed.

Note: Emergency respirators include mouthpiece respirators and other respirators that are limited to escape-only use by their NIOSH certification.

[Statutory Authority: RCW 49.17.010, 49.17.040, 49.17.050, 49.17.060. 05-01-166, § 296-307-61010, filed 12/21/04, effective 4/2/05.]

WAC 296-307-61015 Inspect and repair respirators.

You must:

• Conduct respirator inspections as often as specified in Table 9.

• Make sure respirator inspections cover **all** of the following:

– Respirator function

– Tightness of connections

– The condition of the facepiece, head straps, valves, connecting tubes, and cartridge, canisters or filters

– Pliability and deterioration of elastomeric parts

– Maintenance of air or oxygen cylinders

– Making sure SCBA air cylinders are at ninety percent of the manufacturer's recommended pressure level

– Proper functioning of SCBA regulators when air-flow is activated

– Proper functioning of SCBA low-pressure warning devices when activated

• Certify inspections for emergency respirators by documenting the following:

– Inspection date

– Serial number of each respirator or other identifying information

– Inspector's name or signature

– Inspection findings

– Required action, if problems are found.

Note:
• When documenting inspections you may either:
– Provide the information on a tag or label and attach it to the respirator compartment
OR
– Include the information in an inspection report stored in paper or electronic files accessible to employees.

You must:

• Repair or replace any respirator that is not functioning properly **before** the employee returns to a situation where respirators are required.

– If respirators fail inspection or are not functioning properly during use due to problems such as leakage, vapor or gas breakthrough, or increased breathing resistance, **ALL** of the following apply:

■ Do **NOT** permit such respirators to be used until properly repaired or adjusted

■ Use only NIOSH-certified parts

■ Make sure repairs and adjustments are made by appropriately trained individuals

– Use the manufacturer or a technician trained by the manufacturer to repair or adjust reducing and admission valves, regulators, and warning devices on SCBAs or air-line respirators.

■ Follow the manufacturer's recommendations and specifications for the type and extent of repairs.

Use Table 9 to determine how often to inspect respirators.

Table 9
Required Frequencies for Respirator Inspections

If the respirator is . . .	Then inspect . . .
A SCBA in any use	• Before **each** use **AND** • During cleaning **OR** • Monthly if **NOT** used
Used for nonemergencies, including day-to-day or infrequent use	• Inspect before each use **AND** • During cleaning
Used only for emergencies	• Check for proper function before **and** after **each** use **AND** • Inspect at least monthly as instructed by the manufacturer

If the respirator is . . .	Then inspect . . .
Used for escape-only purposes	• Before carrying into a work place for use

[Statutory Authority: RCW 49.17.010, 49.17.040, 49.17.050, 49.17.060. 05-01-166, § 296-307-61015, filed 12/21/04, effective 4/2/05.]

WAC 296-307-612 Safe use and removal of respirators.

Your responsibility:

To make sure respirator use and removal is safe.

Exemption: These sections do **NOT** apply to employees who voluntarily use any type of respirator. See WAC 296-307-598 for voluntary use requirements.

You must:

Prevent sealing problems with tight-fitting respirators

WAC 296-307-61205

Make sure employees leave the use area before removing respirators

WAC 296-307-61210.

[Statutory Authority: RCW 49.17.010, 49.17.040, 49.17.050, 49.17.060. 05-01-166, § 296-307-612, filed 12/21/04, effective 4/2/05.]

WAC 296-307-61205 Prevent sealing problems with tight-fitting respirators.

You must:

• Make sure employees use the procedure in WAC 296-307-62020 to perform a user seal check each time they put on their tight-fitting respirator.

• Make sure you do NOT permit respirator use if employees have a characteristic that interferes with the respirator facepiece seal or valve function. For example, stubble, moustaches, sideburns, bangs, hairlines, or scars between the face and the sealing surface of the respirator will affect the seal.

• Make sure corrective glasses or personal protective equipment (PPE) do **NOT** interfere with the facepiece seal. Examples of PPE include safety glasses, goggles, faceshields, clothing, and hard hats.

[Statutory Authority: RCW 49.17.010, 49.17.040, 49.17.050, 49.17.060. 05-01-166, § 296-307-61205, filed 12/21/04, effective 4/2/05.]

WAC 296-307-61210 Make sure employees leave the use area before removing respirators.

You must:

• Make sure employees leave the use area for **any** of these reasons:

– To replace air-purifying filters, cartridges, or canisters

– When they smell or taste (detect) vapor or gas leakage from, for example, cartridges, canister, or the facepiece seal

– When they detect changes in breathing resistance

– To readjust their respirators

– To wash their faces and respirators as necessary to prevent skin or eye irritation

– If they become ill

– If they experience sensations of dizziness, nausea, weakness, breathing difficulty, coughing, sneezing, vomiting, fever, or chills.

[Statutory Authority: RCW 49.17.010, 49.17.040, 49.17.050, 49.17.060. 05-01-166, § 296-307-61210, filed 12/21/04, effective 4/2/05.]

WAC 296-307-614 Standby requirements for immediately dangerous to life or health (IDLH) conditions.

Your responsibility:

To provide adequate assistance to employees using respirators in conditions immediately dangerous to life or health (IDLH).

[Statutory Authority: RCW 49.17.010, 49.17.040, 49.17.050, 49.17.060. 05-01-166, § 296-307-614, filed 12/21/04, effective 4/2/05.]

WAC 296-307-61405 Provide standby assistance in immediately dangerous to life or health (IDLH) conditions.

IMPORTANT:

WISHA currently uses the IDLH values in the 1990 NIOSH *Pocket Guide to Chemical Hazards* to determine the existence of IDLH conditions. You may use more recent editions of this guide. Visit www.cdc.gov/niosh for more information.

You must:

• Provide at least two standby employees outside the IDLH area.

Note: You need only one standby employee **if** the IDLH condition is well characterized, will remain stable **AND** you can show one employee can adequately do **ALL** of the following:
- Monitor employees in the IDLH area
- Implement communication
- Initiate rescue duties.

• Train and equip standby employees to provide effective emergency rescue. Equip them with:

– A pressure-demand SCBA or a pressure-demand air-line respirator with an auxiliary SCBA, for each standby employee

– Appropriate retrieval equipment, when it would help with the effective rescue of the entrant, or an equivalent means of rescue

• Make sure standby employees maintain visual, voice, or signal line communication with employees in the IDLH area

• Make sure that in the event of an emergency:

– Standby employees notify you or your designee before they enter the IDLH area to provide emergency rescue

– You provide necessary assistance when notified.

[Statutory Authority: RCW 49.17.010, 49.17.040, 49.17.050, 49.17.060. 05-01-166, § 296-307-61405, filed 12/21/04, effective 4/2/05.]

WAC 296-307-616 Air quality for self-contained breathing apparatus (SCBA) and air-line respirators.

Your responsibility:

To provide employees who use SCBAs or air-line respirators with an acceptable air supply.

You must:

Make sure breathing air and oxygen meet established specifications

WAC 296-307-61605

Prevent conditions that could create a hazardous breathing air supply

WAC 296-307-61610

Make sure compressors do not create a hazardous breathing air supply

WAC 296-307-61615.

[Statutory Authority: RCW 49.17.010, 49.17.040, 49.17.050, 49.17.060. 05-01-166, § 296-307-616, filed 12/21/04, effective 4/2/05.]

WAC 296-307-61605 Make sure breathing air and oxygen meet established specifications.

You must:

• Make sure that all SCBAs and air-line respirators are provided with safe breathing air and oxygen according to the following:

– Compressed breathing air must meet the following specifications for Grade D air:

■ Oxygen (volume/volume) within 19.5-23.5%

■ Hydrocarbon (condensed): NO MORE than five milligrams per cubic meter of air

■ Carbon **monoxide** (CO): NO MORE than ten parts per million (ppm)

■ Carbon **dioxide** (CO_2): NO MORE than 1,000 ppm

■ No noticeable odor

Reference: See the American National Standards Institute - Compressed Gas Association Commodity Specification for Air (G-7.1.1989) for more information. Contact your local library to access a copy.

You must:

• Make sure the moisture content of the air supplied meets the following:

– Air supplied to respirators from cylinders must **NOT** exceed a dew point of -50°F (or -45.6°C) at 1 atmospheric pressure.

– Compressor supplied air must **NOT** exceed a dew point of 10°F (or 5.56°C) **BELOW** the use temperature at 1 atmospheric pressure.

• Cylinders obtained from a supplier of breathing air must have a certificate of analysis that verifies each cylinder's contents meet Grade D and dew point standards.

• Compressed and liquid oxygen must meet the United States Pharmacopoeia requirements for medical or breathing oxygen.

[Statutory Authority: RCW 49.17.010, 49.17.040, 49.17.050, 49.17.060. 05-01-166, § 296-307-61605, filed 12/21/04, effective 4/2/05.]

WAC 296-307-61610 Prevent conditions that could create a hazardous breathing air supply.

You must:

• Use SCBA and air-line respirators safely:

– Do **NOT** supply compressed oxygen to SCBAs or air-line respirators that previously used compressed air.

Note: Compressed air leaves residues containing hydrocarbons such as oil or grease. Fire or explosion can occur if compressed oxygen makes contact with these residues.

You must:

• Use breathing air couplings on air-line respirators that are **NOT** compatible with couplings for nonrespirable air or other gas systems, for example, utility air used for manufacturing purposes.

• Do **NOT** allow asphyxiating substances to enter breathing air lines; for example, do not flush nitrogen through worksite air lines also used for breathing air.

• Use equipment specifically designed for oxygen service or distribution **IF** oxygen concentrations greater than 23.5% are used.

Note: Respiratory equipment NOT designed for oxygen service or distribution can create fire or explosion hazards in oxygen concentrations higher than 23.5%.

You must:

• Make sure cylinders used to supply breathing air for SCBAs or air-line respirators are tested and maintained as described in the federal Department of Transportation's (DOT) Shipping Container Specification Regulations, Title 49 CFR Parts 173 and 178.

Note:
- Use only cylinders marked (with serial number, cylinder pressure, DOT exemption number, and test dates) according to these DOT regulations
- To find any Code of Federal Regulations (CFR) visit: www.access.gpo.gov.

[Statutory Authority: RCW 49.17.010, 49.17.040, 49.17.050, 49.17.060. 05-01-166, § 296-307-61610, filed 12/21/04, effective 4/2/05.]

WAC 296-307-61615 Make sure compressors do not create a hazardous breathing air supply.

IMPORTANT:

• Ambient-air movers (or pumps) used to supply air to respirators must be used according to the manufacturer's instructions.

• Respirators used with ambient-air movers must be approved by NIOSH to operate within the pressure ranges of the air mover.

You must:

(1) Locate or modify compressor intakes so they will not pick up contaminated air OR exhaust gases such as carbon monoxide from:

• Fuel-powered vehicles

OR

• The internal combustion motor of the compressor

OR

• Other contaminant sources in the area, for example, a ventilation system discharge.

Note:
- You may need to reposition or extend the compressor's intake or engine exhaust pipe or outlet, especially if they are located near each other.
- Be aware that exhaust gases may not adequately disperse when the compressor is operated in:
  - An enclosed space such as a small room, a corner, or near a wall

  OR
  - In turbulent wind conditions.

You must:

(2) Equip compressors with suitable air-purifying filters, water traps, and sorbents (such as charcoal beds) and maintain them as follows:

• Periodically change or clean them according to the manufacturer or supplier's instructions

• Keep a tag at the compressor with the following information:

– When the sorbent and filters were last replaced or cleaned

– The date of the most recent changes or cleaning

– The signature of the person authorized by the employer to perform changes or cleaning.

Note: To be sure you are providing the recommended operating pressure for respirators, you may need to install a delivery pressure gauge at the point where the manifold respirator hose is attached.

You must:

(3) Make sure the carbon monoxide (CO) level in breathing air from compressors does **NOT** exceed ten parts per million (ppm).

Note: If you do not have a reliable CO-free area available for locating your compressor intake, consider these examples of methods to prevent CO contamination of the air supply:
- Use of continuous and effective carbon monoxide alarms and filters
- Conduct frequent monitoring of air quality
- Use a CO converter (converts CO to carbon dioxide).

You must:

• Maintain CO levels in oil lubricated compressors by using at least one of the following:

– An effective CO alarm

– An effective high temperature alarm **AND** testing the air supply often enough to see if CO levels exceed ten ppm.

Note:
- How often to test depends on a number of considerations, for example:
  - Compressor age
  - Maintenance history of the compressor
  - Stability of CO readings
- If the CO or high temperature alarm cannot be heard by the employee, a flashing light or other effective alternative to an audio alarm needs to be used
- Safeguards, such as alarms, are necessary to prevent CO contamination resulting from compressor overheating
- Any type of oil-lubricated compressor, such as screw or piston types, may produce dangerous levels of CO if overheating occurs
  - Old compressors are known to leak oil due to worn parts, increasing the possibility for overheating. Newer compressors may also overheat if maintenance practices are poor. For example, poor maintenance practices may lead to disconnected or incorrectly set alarms, inoperative shut-offs, or an impaired cooling system
- You need to instruct employees to move to a safe area when the alarm sounds AND to stop using respirators.

[Statutory Authority: RCW 49.17.010, 49.17.040, 49.17.050, 49.17.060. 05-01-166, § 296-307-61615, filed 12/21/04, effective 4/2/05.]

WAC 296-307-618 Labeling of air-purifying respirator filters, cartridges, and canisters.

Your responsibility:

To make sure employees, their supervisors, and program administrators can easily check for the correct air-purifying filters, cartridges, and canisters on respirators.

Exemption: This section does **NOT** apply to filtering-facepiece respirators when used voluntarily. See WAC 296-307-598 for voluntary use requirements.

[Statutory Authority: RCW 49.17.010, 49.17.040, 49.17.050, 49.17.060. 05-01-166, § 296-307-618, filed 12/21/04, effective 4/2/05.]

WAC 296-307-61805 Keep labels readable on respirator filters, cartridges, and canisters during use.

You must:

• Make sure the NIOSH certification labeling and color-coding on air-purifying respirator filters, cartridges, and canisters remains readable and intact during use.

[Statutory Authority: RCW 49.17.010, 49.17.040, 49.17.050, 49.17.060. 05-01-166, § 296-307-61805, filed 12/21/04, effective 4/2/05.]

WAC 296-307-620 Required procedures for respiratory protection program.

Your responsibility:

To use the procedures and questionnaire provided in this section when implementing your respiratory protection program.

You must:

Use this medical questionnaire for medical evaluations

WAC 296-307-62005

Follow these fit-testing procedures for tight-fitting respirators

WAC 296-307-62010

Follow procedures established for cleaning and disinfecting respirators

WAC 296-307-62015

Follow procedures established for seal checking respirators

WAC 296-307-62020.

[Statutory Authority: RCW 49.17.010, 49.17.040, 49.17.050, 49.17.060. 05-01-166, § 296-307-620, filed 12/21/04, effective 4/2/05.]

WAC 296-307-62005 Use this medical questionnaire for medical evaluations.

You must:

• Use the medical questionnaire in Table 10 when conducting medical evaluations.

Note:
- You may use a physical exam instead of this questionnaire if the exam covers the same information as the questionnaire.
- You may use on-line questionnaires if the questions are the same and the requirements in WAC 296-307-604 of this part are met.
- You may choose to send the questionnaire to the LCHP ahead of time, giving time to review it and add any necessary questions.
- The LHCP determines what questions to add to the questionnaire, if any; however, questions in Parts 1-3 may not be deleted or substantially altered.

Table 10

WISHA Medical Evaluation Questionnaire
Employer instructions:
• You may use on-line questionnaires if the requirements in WAC 296-307-60405 are met. • You must tell your employee how to deliver or send the completed questionnaire to the healthcare provider you have selected. • You must **NOT** review employees' questionnaires.
Healthcare provider's instructions:
• Review the information in this questionnaire and any additional information provided to you by the employer. • You may add questions to this questionnaire at your discretion; HOWEVER, questions in Parts 1-3 may not be deleted or substantially altered. • Follow-up evaluation is required for any positive response to questions 1-8 in Part 2, or questions 1-6 in Part 3. This might include: Phone consultations to evaluate positive responses, medical tests, and diagnostic procedures. • When your evaluation is complete, send a copy of your written recommendation to the employer AND employee.
Employee information and instructions:
• Your employer must allow you to answer this questionnaire during normal working hours, or at a time and place that's convenient to you. • Your employer or supervisor must not look at or review your answers at any time.

Part 1 - Employee Background Information
ALL employees must complete this part
Please print

1. Today's date: _____
2. Your name: _____
3. Your age (to nearest year): ____
4. Sex (circle one): Male / Female
5. Your height: ___ft. ___in.
6. Your weight: ____lbs.
7. Your job title: _____
8. A phone number where you can be reached by the healthcare professional who reviews this questionnaire (include Area Code): _____
9. The best time to call you at this number: _____
10. Has your employer told you how to contact the healthcare professional who will review this questionnaire? Yes / No
11. Check the type of respirator(s) you will be using:
a. ____ N, R, or P filtering-facepiece respirator (for example, a dust mask, OR an N95 filtering-facepiece respirator).
b. Check all that apply.
❏ Half mask ❏ Full facepiece mask ❏ Helmet hood ❏ Escape
❏ Nonpowered cartridge or canister ❏ Powered air-purifying cartridge respirator (PAPR)
❏ Supplied-air or Air-line
Self-contained breathing apparatus (SCBA): ❏ Demand or ❏ Pressure demand
Other: _____
12. Have you previously worn a respirator? Yes / No
If "yes," describe what type(s): _____

Part 2 - General Health Information
ALL employees must complete this part
Please circle "Yes" or "No"

1. Do you *currently* smoke tobacco, or have you smoked tobacco in the last month? Yes / No
2. Have you *ever had* any of the following conditions?
a. Seizures (fits): Yes / No
b. Diabetes (sugar disease): Yes / No
c. Allergic reactions that interfere with your breathing: Yes / No
d. Claustrophobia (fear of closed-in places): Yes / No
e. Trouble smelling odors: Yes / No
3. Have you *ever had* any of the following pulmonary or lung problems?
a. Asbestosis: Yes / No
b. Asthma: Yes / No
c. Chronic bronchitis: Yes / No
d. Emphysema: Yes / No
e. Pneumonia: Yes / No
f. Tuberculosis: Yes / No
g. Silicosis: Yes / No
h. Pneumothorax (collapsed lung): Yes / No
i. Lung cancer: Yes / No
j. Broken ribs: Yes / No
k. Any chest injuries or surgeries: Yes / No
l. Any other lung problem that you have been told about: Yes / No
4. Do you *currently* have any of the following symptoms of pulmonary or lung illness?
a. Shortness of breath: Yes / No
b. Shortness of breath when walking fast on level ground or walking up a slight hill or incline: Yes / No
c. Shortness of breath when walking with other people at an ordinary pace on level ground: Yes / No
d. Have to stop for breath when walking at your own pace on level ground: Yes / No
e. Shortness of breath when washing or dressing yourself: Yes / No
f. Shortness of breath that interferes with your job: Yes / No
g. Coughing that produces phlegm (thick sputum): Yes / No
h. Coughing that wakes you early in the morning: Yes / No
i. Coughing that occurs mostly when you are lying down: Yes / No
j. Coughing up blood in the last month: Yes / No
k. Wheezing: Yes / No
l. Wheezing that interferes with your job: Yes / No

m. Chest pain when you breathe deeply:	Yes	/	No
n. Any other symptoms that you think may be related to lung problems:	Yes	/	No
5. Have you *ever had* any of the following cardiovascular or heart problems?	Yes	/	No
a. Heart attack:	Yes	/	No
b. Stroke:	Yes	/	No
c. Angina:	Yes	/	No
d. Heart failure:	Yes	/	No
e. Swelling in your legs or feet (not caused by walking):	Yes	/	No
f. Heart arrhythmia (heart beating irregularly):	Yes	/	No
g. High blood pressure:	Yes	/	No
h. Any other heart problem that you have been told about:	Yes	/	No
6. Have you *ever had* any of the following cardiovascular or heart symptoms?			
a. Frequent pain or tightness in your chest:	Yes	/	No
b. Pain or tightness in your chest during physical activity:	Yes	/	No
c. Pain or tightness in your chest that interferes with your job:	Yes	/	No
d. In the past 2 years, have you noticed your heart skipping or missing a beat:	Yes	/	No
e. Heartburn or indigestion that's not related to eating:	Yes	/	No
f. Any other symptoms that you think may be related to heart or circulation problems:	Yes	/	No
7. Do you *currently* take medication for any of the following problems?	Yes	/	No
a. Breathing or lung problems:	Yes	/	No
b. Heart trouble:	Yes	/	No
c. Blood pressure:	Yes	/	No
d. Seizures (fits):	Yes	/	No
8. If you have used a respirator, have you *ever had* any of the following problems? (If you have never used a respirator, check the following space and go to question 9): ____			
a. Eye irritation:	Yes	/	No
b. Skin allergies or rashes:	Yes	/	No
c. Anxiety:	Yes	/	No
d. General weakness or fatigue:	Yes	/	No
e. Any other problem that interferes with your use of a respirator?	Yes	/	No
9. Would you like to talk to the healthcare professional who will review this questionnaire about your answers?	Yes	/	No
Part 3 - Additional Questions for Users of Full-Facepiece Respirators or SCBAs			
Please circle "Yes" or "No"			
1. Have you *ever lost* vision in either eye (temporarily or permanently)?	Yes	/	No
2. Do you *currently* have any of these vision problems?			
a. Need to wear contact lenses:	Yes	/	No
b. Need to wear glasses:	Yes	/	No
c. Color blindness:	Yes	/	No
d. Any other eye or vision problem:	Yes	/	No
3. Have you *ever had* an injury to your ears, including a broken ear drum?	Yes	/	No
4. Do you *currently* have any of these hearing problems?			
a. Difficulty hearing:	Yes	/	No
b. Need to wear a hearing aid:	Yes	/	No
c. Any other hearing or ear problem:	Yes	/	No
5. Have you *ever had* a back injury?	Yes	/	No
6. Do you *currently* have any of the following musculoskeletal problems?			
a. Weakness in any of your arms, hands, legs, or feet:	Yes	/	No
b. Back pain:	Yes	/	No
c. Difficulty fully moving your arms and legs:	Yes	/	No
d. Pain or stiffness when you lean forward or backward at the waist:	Yes	/	No
e. Difficulty fully moving your head up or down:	Yes	/	No
f. Difficulty fully moving your head side to side:	Yes	/	No
g. Difficulty bending at your knees:	Yes	/	No
h. Difficulty squatting to the ground:	Yes	/	No
i. Climbing a flight of stairs or a ladder carrying more than 25 lbs:	Yes	/	No
j. Any other muscle or skeletal problem that interferes with using a respirator:	Yes	/	No
Part 4 - Discretionary Questions			
Complete questions in this part ONLY IF your employer's healthcare provider says they are necessary			
1. In your present job, are you working at high altitudes (over 5,000 feet) or in a place that has lower than normal amounts of oxygen?	Yes	/	No

If "yes," do you have feelings of dizziness, shortness of breath, pounding in your chest, or other symptoms when you are working under these conditions:	Yes	/	No
2. Have you ever been exposed (at work or home) to hazardous solvents, hazardous airborne chemicals (such as gases, fumes, or dust), OR have you come into skin contact with hazardous chemicals?	Yes	/	No
If "yes," name the chemicals, if you know them: _____			
3. Have you ever worked with any of the materials, or under any of the conditions, listed below:			
a. Asbestos?	Yes	/	No
b. Silica (for example, in sandblasting)?	Yes	/	No
c. Tungsten/cobalt (for example, grinding or welding this material)?	Yes	/	No
d. Beryllium?	Yes	/	No
e. Aluminum?	Yes	/	No
f. Coal (for example, mining)?	Yes	/	No
g. Iron?	Yes	/	No
h. Tin?	Yes	/	No
i. Dusty environments?	Yes	/	No
j. Any other hazardous exposures?	Yes	/	No
If "yes," describe these exposures: _____			
4. List any second jobs or side businesses you have: _____			
5. List your previous occupations: _____			
6. List your current and previous hobbies: _____			
7. Have you been in the military services?	Yes	/	No
If "yes," were you exposed to biological or chemical agents (either in training or combat)?	Yes	/	No
8. Have you ever worked on a HAZMAT team?	Yes	/	No
9. Other than medications for breathing and lung problems, heart trouble, blood pressure, and seizures mentioned earlier in this questionnaire, are you taking any other medications for any reason (including over-the-counter medications)?	Yes	/	No
If "yes," name the medications if you know them: _____			
10. Will you be using any of the following items with your respirator(s)?			
a. HEPA filters:	Yes	/	No
b. Canisters (for example, gas masks):	Yes	/	No
c. Cartridges:	Yes	/	No
11. How often are you expected to use the respirator(s)?			
a. Escape-only (no rescue):	Yes	/	No
b. Emergency rescue only:	Yes	/	No
c. Less than 5 hours *per week*:	Yes	/	No
d. Less than 2 hours *per day*:	Yes	/	No
e. 2 to 4 hours per day:	Yes	/	No
f. Over 4 hours per day:			
12. During the period you are using the respirator(s), is your work effort:			
a. *Light* (less than 200 kcal per hour):	Yes	/	No
If "yes," how long does this period last during the average shift: ____hrs. ____mins.			
Examples of a light work effort are sitting while writing, typing, drafting, or performing light assembly work; or standing while operating a drill press (1-3 lbs.) or controlling machines.			
b. *Moderate* (200 to 350 kcal per hour):	Yes	/	No
If "yes," how long does this period last during the average shift: ____hrs. ____mins.			
Examples of moderate work effort are sitting while nailing or filing; driving a truck or bus in urban traffic; standing while drilling, nailing, performing assembly work, or transferring a moderate load (about 35 lbs.) at trunk level; walking on a level surface about 2 mph or down a 5-degree grade about 3 mph; or pushing a wheelbarrow with a heavy load (about 100 lbs.) on a level surface.			
c. *Heavy* (above 350 kcal per hour):	Yes	/	No
If "yes," how long does this period last during the average shift: ____hrs. ____mins.			
Examples of heavy work are lifting a heavy load (about 50 lbs.) from the floor to your waist or shoulder; working on a loading dock; shoveling; standing while bricklaying or chipping castings; walking up an 8-degree grade about 2 mph; climbing stairs with a heavy load (about 50 lbs.).			
13. Will you be wearing protective clothing and/or equipment (other than the respirator) when you are using your respirator?	Yes	/	No
If "yes," describe this protective clothing and/or equipment: _____			
14. Will you be working under hot conditions (temperature exceeding 77°F):	Yes	/	No

15. Will you be working under humid conditions: Yes / No
16. Describe the work you will be doing while using your respirator(s): _____
17. Describe any special or hazardous conditions you might encounter when you are using your respirator(s) (for example, confined spaces, life-threatening gases): _____
18. Provide the following information, if you know it, for each toxic substance that you will be exposed to when you are using your respirator(s):
Name of the first toxic substance: _____
Estimated maximum exposure level per shift: _____
Duration of exposure per shift: _____
Name of the second toxic substance: _____
Estimated maximum exposure level per shift: _____
Duration of exposure per shift: _____
Name of the third toxic substance: _____
Estimated maximum exposure level per shift: _____
Duration of exposure per shift: _____
The name of any other toxic substances that you will be exposed to while using your respirator: _____
19. Describe any special responsibilities you will have while using your respirator(s) that may affect the safety and well-being of others (for example, rescue, security). _____

[Statutory Authority: RCW 49.17.010, 49.17.040, 49.17.050, 49.17.060. 05-01-166, § 296-307-62005, filed 12/21/04, effective 4/2/05.]

WAC 296-307-62010 Follow these fit-testing procedures for tight-fitting respirators.

IMPORTANT:

• This section contains procedural requirements that apply during actual fit testing.

• See WAC 296-307-606 of this part for fit-testing requirements that apply to your overall program.

Exemptions: This section does **NOT** apply to employees who:
- Voluntarily use respirators

OR
- Are required to use mouthpiece respirators.

You must:

• Conduct fit testing according to all of the following:

– Follow the procedure in Table 11 to choose a respirator for fit testing:

■ Prior to conducting fit tests

AND

■ Any time your employee must select a different respirator such as when a previously selected respirator fails a test

– Select and follow at least one of the following fit test procedures:

■ Qualitative fit-test procedures:

❖ Isoamyl acetate vapor (IAA, banana oil) in Table 12

❖ Saccharine aerosol in Table 13

❖ Bitrex™ aerosol in Table 14

❖ Irritant smoke in Table 15

■ Quantitative fit-test procedures:

❖ Ambient aerosol condensation nuclei counter such as the Portacount™, in Table 16

❖ Controlled negative pressure (CNP) such as the Fit-Tester 3000™, in Table 17

❖ Generated aerosol in Table 18

– Make sure employees perform the appropriate fit-test exercises listed in Table 19.

– Clean and maintain equipment according to the manufacturer's instructions.

– Make sure during fit testing employees wear any safety equipment that could:

■ Interfere with respirator fit

AND

■ Be worn in the workplace. For example, chemical splash goggles.

– Check, prior to fit testing, for conditions that may interfere with the respirator seal or valve functions. If you find such conditions, do **NOT** conduct fit testing for that individual.

Note: Examples of conditions that may interfere with the respirator seal or valve functions include:
- Moustache, stubble, sideburns, bangs, hairline, and other types of facial hair in areas where the respirator facepiece seals or that interfere with valve function
- Temple bars of corrective eyewear or headgear that extend through the face seal area.

Table 11

Procedure for Choosing a Respirator for Fit Testing
1. **Inform** the employee: • To choose the most comfortable respirator that provides an adequate fit • That each respirator sample represents a different size and, if more than one model is supplied, a different shape • That if fitted and used properly, the respirator chosen will provide adequate protection 2. **Provide** a mirror and show the employee how to: • Put on the respirator • Position the respirator on the face • Set strap tension. **Note:** This instruction does NOT take the place of the employee's formal training since it is only a review. 3. **Review** with the employee how to check for a comfortable fit around the nose, cheeks and other areas on the face. • Tell the employee the respirator should be comfortable while talking or wearing eye protection. 4. **Have the employee** hold each facepiece against the face, taking enough time to compare the fit of each. The employee can then either: • Reject any facepiece that clearly does not feel comfortable or fit adequately **OR**

Procedure for Choosing a Respirator for Fit Testing

• Choose which facepiece is most acceptable and which is less acceptable, if any.

Note:

• Supply as many respirator models and sizes as needed to make sure the employee finds a respirator that's acceptable and fits correctly

• To save time later, during this step note the more acceptable facepieces in case the one chosen fails the fit test or proves unacceptable later.

5. **Have the employee wear** the most acceptable respirator for **AT LEAST** 5 minutes to evaluate comfort and fit. Do **ALL** of the following during this time:

• Ask the employee to observe and comment about the comfort and fit:

– Around the nose, cheeks, and other areas on the face

– When talking or wearing eye protection

• Have the employee put on the respirator and adjust the straps until they show proficiency

• Evaluate the respirator's general fit by checking:

– Proper chin placement

– Properly tightened straps (do **NOT** over tighten)

– Acceptable fit across the nose bridge

– Respirator size; it must span the distance from nose to chin

– To see if the respirator stays in position

• Have the employee complete a successful seal check as specified in WAC 296-307-62020 of this chapter

– Prior to the seal check they must settle the respirator on their face by taking a few slow deep breaths **WHILE SLOWLY:**

■ Moving their head from side-to-side

AND

■ Up and down.

6. **If the employee finds the respirator unacceptable,** allow the employee to select another one and return to Step 5. Otherwise, proceed to Step 7.

7. **Before starting the fit test,** you must:

• Describe the fit test including screening procedures, employee responsibilities, and test exercises

AND

• Make sure the employee wears the respirator **AT LEAST** five minutes.

Table 12

Isoamyl Acetate (Banana Oil) Vapor Test Procedure

Important:

• This is a qualitative fit-test (QLFT) procedure

• The success of this test depends on preserving the employee's odor sensitivity to isoamyl acetate (IAA) vapor

– Vapor accumulations in ambient air can decrease odor sensitivity. To prevent this:

■ Prepare **ALL** solutions in a location separate from screening and test areas

■ Conduct screening and tests in separate well-ventilated rooms. For example, use an exhaust fan or laboratory hood to prevent IAA vapor from accumulating in the room air

– Always use odor-free water, for example, distilled or spring water that's 25°C (77°F).

• Isoamyl acetate is also known as isopentyl acetate.

Screening Preparations

Important:

Odor threshold screening determines if the employee can detect weak concentrations of IAA vapor.

1. Choose an appropriate location to conduct screening.

• Conduct screening and tests in separate well-ventilated rooms.

2. Prepare a stock solution **AT LEAST** weekly as follows:

• Add one milliliter (ml) of pure IAA to 800 ml of odor-free water in a one-liter glass jar with a metal lid using a measuring dropper or pipette

• Seal the jar with the lid and shake it for 30 seconds

• Clean the dropper or pipette.

3. Prepare the odor test solution daily as follows:

• Add 0.4 ml from the stock solution to 500 ml of water in a one liter glass jar with a metal lid using a clean pipette or dropper

• Seal the jar with the lid and shake it for 30 seconds

• Let this solution stand for 2-3 minutes so the IAA concentration above the liquid reaches equilibrium

• Label this jar so you know the contents but the employee cannot know its contents, for example, "1."

Note:

To maintain the integrity of the test, use labels that peel off easily **AND** periodically switch the labels.

4. Prepare a "test blank" solution as follows:

• Add 500 ml of odor-free water to a one liter glass jar with a metal lid

• Seal the jar

• Label the jar so you know the contents but the employee cannot know its contents.

5. Type or neatly print the following instructions on a card and place it on the table in front of the two test jars:

"*The purpose of this test is to find out if you can smell banana oil at a low concentration. While both jars contain water, one* ***ALSO*** *contains a small amount of banana oil.*

Make sure the lid is secure then pick up a jar and shake it for two seconds. Open the jar and sniff at the opening. Repeat this for the second jar.

Tell the individual conducting the fit test which jar contains banana oil."

Test Preparations

6. Choose an appropriate location to conduct fit testing.

• Conduct screening and tests in separate well-ventilated rooms.

7. Assemble the fit test enclosure in the room.

• Invert a clear 55-gallon drum liner over a circular 2-foot diameter frame made of plywood or other lightweight rigid material OR construct a similar enclosure using plastic sheeting

• Hang the frame with the plastic covering so the top of the enclosure is about six inches above the employee's head

• Attach a small hook inside top center of the enclosure

Isoamyl Acetate (Banana Oil) Vapor Test Procedure

- Tape a copy of the test exercises (see Table 28) to the inside of the test enclosure where the employee can read it.

8. Have organic vapor cartridges or equivalent on hand for each employee's chosen respirator.
9. Have ready a 6 x 5-inch piece of paper towel or other porous absorbent single-ply material **AND** 0.75 ml of pure IAA. Do NOT apply IAA yet.

Note:
As an alternative to using the paper towel, you may use an IAA test swab OR ampoule if it has been demonstrated to generate an equivalent test concentration.

Screening

10. Have the employee, while **NOT** wearing a respirator, follow the instructions on the card provided.
    - If the employee correctly identifies the jar containing IAA, proceed to conduct testing (Step 11)
    - If the employee is **NOT** able to correctly identify the jar containing IAA, you must **STOP** and use a different fit test protocol.

Test

11. **BEFORE** entering the fit test room, have the employee attach cartridges, put on, properly adjust, and seal check the respirator. Have the employee enter the test enclosure.
12. Wet the paper towel with 0.75 ml of **pure** IAA **AND** fold it in half.
13. Pass the paper towel to the employee inside the enclosure **AND** instruct the employee to hang it on the hook at the top of the enclosure.
14. Wait two minutes for the IAA vapor to fill the enclosure.
    - While waiting, explain the fit test, including the purpose of the test exercises, the importance of cooperation, and that you must be informed if a banana-like odor is detected during the test
    - You may also demonstrate the test exercises.
15. Have the employee perform the appropriate fit-test exercises in Table 19.
    - If the employee does **NOT** detect IAA while performing test exercises, the fit test has been **PASSED.** Proceed as follows:
      – **BEFORE** leaving the enclosure, have the employee break the respirator seal and inhale. If they **detect** IAA, the test is valid
      – When exiting the employee must remove the paper towel and give it to the individual conducting the fit test. This prevents IAA vapor from building up in the enclosure during subsequent tests
      – The individual conducting the fit test must keep used paper towels in a self-sealing plastic bag to prevent area contamination
    - If the employee detects IAA during any test exercise, the fit test has **FAILED. STOP** and have the employee do the following:
      – Quickly return to the selection room to remove the respirator. This avoids decreasing the employee's odor sensitivity
      – Select another respirator
      – Repeat screening and testing
      ■ At this stage, if the employee fails the screening part of this procedure, the employee can repeat it **AFTER** waiting at least five minutes for odor sensitivity to return.

Table 13

Saccharin Aerosol Test Procedure

Screening Preparations

Important:
- This is a qualitative fit-test (QLFT) procedure
- Taste threshold screening determines whether the employee being tested can detect the taste of saccharin
  – The employee must **NOT** eat, smoke, chew gum or drink anything but plain water for at least fifteen minutes **BEFORE** the fit test. Sweet foods or drink consumed before the test may make the employee unable to detect saccharin during screening
  – Nebulizers must be thoroughly rinsed in water and shaken dry:
    ■ Each morning and afternoon
    OR
    ■ At least every four hours.
- You may use commercially prepared solutions if they meet the requirements in this procedure.

1. Obtain a test enclosure (hood) that meets the following specifications:
   - Twelve inches in diameter by fourteen inches tall
   - A clear front portion
   - Enough space inside to allow free movement of the head when a respirator is worn
   - A 3/4 inch (or 1.9 centimeter) hole to accommodate the nebulizer nozzle. The hole must line up in front of the wearer's nose and mouth.

Note:
- An enclosure similar to the 3M hood assembly, parts #FT 14 and #FT 15 combined, meets these specifications
- This enclosure can also be used for testing.

2. Obtain and assemble two clean DeVilbiss Model 40 Inhalation Medication Nebulizers OR equivalent.
3. Prepare the screening solution as follows:
   - Dissolve 83.0 milligrams of sodium saccharin USP in 100 ml of warm distilled water
   OR
   - **IF** you have already prepared the fit-test solution, you can make the screening solution by adding 1 ml of this solution to 100 ml of distilled water.
4. Add about 1 ml of the screening solution to one of the nebulizers.
   - Mark this nebulizer to distinguish it from the one to be used for fit testing.

Test Preparations

5. Prepare the fit-test solution as follows:
   - Add 83.0 grams of sodium saccharin to 100 ml of warm water.
6. Add about 1 ml of the test solution to the second nebulizer.
   - Mark this nebulizer to distinguish it from the one used for screening

Saccharin Aerosol Test Procedure

7. Have particulate filters ready for the employee's chosen respirator or have filtering-facepiece respirators ready.

Screening

8. Have the employee, while NOT wearing a respirator, put on the test enclosure.
9. Instruct the employee to:
   - Breath through a slightly open mouth with tongue extended during screening **AND** testing
   - Immediately report when a sweet taste is detected.
10. Insert the nebulizer into the front hole of the test enclosure **AND** administer saccharin as follows:
   - Direct the nozzle away from the employee's nose and mouth
   - Complete 10 squeezes in rapid succession
   - Each time firmly squeeze the bulb so it collapses completely, then release and allow it to fully expand.
11. Ask the employee if a sweet taste is detected.
   - If **YES,** screening is completed. Proceed to conduct testing, Step 14, **AFTER** you:
     – Ask the employee to remember the taste for reference during the fit test
     – Note the employee's taste threshold as "10" regardless of the number of squeezes actually completed
   - If **NO,** screening must continue. Proceed to Step 12.
12. Repeat with 10 more squeezes. Then follow Step 11 again; **EXCEPT** this time note the employee's taste threshold as "20" **IF** a sweet taste is reported.
   - If a sweet taste is still **NOT** detected, repeat with 10 more squeezes and follow Step 11 one last time; **EXCEPT** this time note "30" for the taste threshold IF a sweet taste is reported.
13. If **NO** sweet taste is reported after 30 squeezes, you must **STOP** and choose a different fit-test protocol for the employee.

Test

Important!
- Periodically check nebulizers to make sure they do not clog during use. A test is **NOT** valid if the nebulizer is clogged at the end of the test.

14. Have the employee attach particulate filters, put on, properly adjust, and seal check the respirator. Have the employee put on the test enclosure (hood).
15. Instruct the employee to immediately report if a sweet taste is detected.
16. Insert the nebulizer into the front hole of the test enclosure **AND** administer the same number of squeezes, either 10, 20, or 30, as noted during screening.
17. Have the employee perform the appropriate fit-test exercises as described in Table 19. During this step:
   - Replenish the aerosol in the hood **EVERY** 30 seconds using 1/2 the number of squeezes used in Step 16, either 5, 10, or 15
   - The employee must report if a sweet taste is detected:
     – If **NO** saccharin is tasted, the test has been **PASSED**
       ■ If saccharin is tasted the test has **FAILED,** have the employee select another respirator

Saccharin Aerosol Test Procedure

AND
■ Repeat screening and testing.

Table 14

Bitrex™ Aerosol Test Procedure

Important!
- This is a qualitative fit-test (QLFT) procedure
- Bitrex™ (denatonium benzoate) is routinely used as a taste aversion agent in household liquids that children shouldn't drink and is endorsed by the American Medical Association, the National Safety Council, and the American Association of Poison Control Centers
- The employee must **NOT** eat, smoke, chew gum or drink anything but plain water for at least fifteen minutes **BEFORE** the fit test.

Screening Preparations

Important!
- Taste threshold screening determines whether the employee being tested can detect the taste of Bitrex™
- Nebulizers must be thoroughly rinsed in water and shaken dry:
  – Each morning and afternoon
  OR
  – At least every four hours.
- You may use commercially prepared solutions if they meet the requirements in this procedure.

1. Obtain a test enclosure that meets the following specifications:
   - Twelve inches in diameter by fourteen inches tall
   - A clear front portion
   - Enough space inside the front to allow free movement of the head when a respirator is worn
   - 3/4 inch (or 1.9 centimeter) hole to accommodate the nebulizer nozzle. The hole must line up in front of the wearer's nose and mouth.

   Note:
   - An enclosure similar to the 3M hood assembly, parts #FT 14 and #FT 15 combined, meets these specifications
   - This enclosure can also be used for testing.
2. Obtain and assemble two clean DeVilbiss Model 40 Inhalation Medication Nebulizers OR equivalent:
3. Prepare the screening solution as follows:
   - Make up a 5% salt solution by dissolving 5.0 grams of salt (sodium chloride) into 100 ml of distilled water
   - Dissolve 13.5 milligrams of Bitrex™ in the salt solution.
4. Add about 1 ml of the screening solution to one of the nebulizers.
   - Mark this nebulizer to distinguish it from the one to be used for fit testing.

Test Preparations

5. Prepare the fit test solution.
   - Dissolve 10.0 grams of salt (sodium chloride) into 200 ml of distilled water
   - Add 337.5 milligrams of Bitrex™ to the warmed salt solution.
6. Add about 1 ml of the test solution to the second nebulizer.

Bitrex™ Aerosol Test Procedure

- Mark this nebulizer to distinguish it from the one used for screening.

7. Have particulate filters ready for the employee's chosen respirator or have filtering-facepiece respirators ready.

Screening

Important:
The employee must **NOT** eat, smoke, chew gum or drink anything but plain water for at least fifteen minutes **BEFORE** the screening and test

8. Have the employee, while **NOT** wearing a respirator, put on the test enclosure.
9. Instruct the employee to:
   - Breath through a slightly opened mouth with tongue extended during screening **AND** testing
   - Immediately report when a bitter taste is detected.
10. Insert the nebulizer into the front hole of the test enclosure **AND** administer Bitrex™ as follows:
   - Direct the nozzle away from the employee's nose and mouth
   - Complete 10 squeezes in rapid succession
   - Each time firmly squeeze the bulb so it collapses completely, then release and allow it to fully expand.
11. Ask the employee whether a bitter taste is detected.
   - If **YES,** screening is completed. Proceed to conduct testing, Step 14, **AFTER** you:
     - Ask the employee to remember the taste for reference during the fit test
     - Note the employee's taste threshold as "10," regardless of the number of squeezes actually completed
   - If **NO,** screening must continue. Proceed to Step 12.
12. Repeat with 10 more squeezes. Then follow Step 11 again; **EXCEPT** this time note the employee's taste threshold as "20" **IF** a bitter taste is reported.
   - If a bitter taste is still **NOT** detected repeat with 10 more squeezes and follow Step 11 one last time; **EXCEPT** this time note "30" for the taste threshold IF a bitter taste is reported.
13. If **NO** bitter taste is reported after 30 squeezes, you must **STOP** and choose a different fit-test protocol for the employee.

Test

14. Have the employee attach particulate filters, put on, properly adjust, and seal check the respirator. Have the employee put on the test enclosure.
15. Instruct the employee to:
   - Breathe through a slightly opened mouth with tongue extended during screening **AND** testing
   - Immediately report when a bitter taste is detected.
16. Insert the nebulizer into the front hole of the test enclosure **AND** administer the same number of squeezes, either 10, 20, or 30, as noted during screening.
17. Have the employee perform the appropriate fit-test exercises as described in Table 19. During this step:
   - Replenish the aerosol in the hood **EVERY** 30 seconds using 1/2 the number of squeezes used in Step 16, either 5, 10, or 15
   - The employee must report if a bitter taste is detected:
     - If **NO** Bitrex™ is tasted, the test has been **PASSED**

Bitrex™ Aerosol Test Procedure

- If Bitrex™ is tasted the test has **FAILED.** Have the employee:
  - ■ Select another respirator

  AND
  - ■ Repeat all screening and testing steps.

Table 15

Irritant Smoke (Stannic Chloride) Test Procedure

Important:
- **DO NOT USE A TEST ENCLOSURE OR HOOD FOR THIS FIT TEST!**
- This is a qualitative fit-test (QLFT) procedure
- During this test an employee is exposed to irritating smoke containing hydrochloric acid produced by a stannic chloride ventilation smoke tube to detect leakage. The smoke will irritate eyes, lungs, and nasal passages
- Employee sensitivity varies, and certain employees may respond more intensely than others exposed to irritant smoke. The individual conducting the fit test must take precautions to minimize the employees' exposure to irritant smoke
- Conduct fit testing in an area with adequate ventilation to prevent exposure of the individual conducting the fit test and build-up of irritant smoke in the ambient air.

Screening AND Test Preparations

Important:
Sensitivity screening is necessary to determine whether the employee can detect a weak concentration of irritant smoke **AND** whether any gross facepiece leakage is detected.

1. Obtain only stannic chloride (ventilation) smoke tubes, **AND** an aspirator squeeze bulb **OR** use a low-flow air pump set to deliver 200 milliliters of air flow per minute.
2. Equip the employee's chosen respirator with P100 series filters if a negative pressure air-purifying respirator will be tested. If a powered air-purifying respirator (PAPR) will be tested equip the respirator with high-efficiency particulate air (HEPA) filters.

Screening

Important!
When performing sensitivity screening checks use only the **MINIMUM** amount of smoke necessary to elicit a response from the employee.

3. Advise the employee that the smoke can be irritating to eyes, lungs, and nasal passages **AND** instruct the employee to keep eyes closed while exposed.
4. Break both ends of the ventilation smoke tube **AND** fit a short piece of plastic tubing, for example, two-to-six inches of tygon tubing, over one end to prevent exposure to the sharp end of the tube. Connect the other end to an aspirator bulb or a low-flow air pump set to deliver a flow of 200 ml per minute.
5. While the employee is **NOT** wearing a respirator, have the employee smell a weak concentration of irritant smoke to become familiar with its irritating properties.
   - Carefully direct a small amount of irritant smoke toward the employee.

Irritant Smoke (Stannic Chloride) Test Procedure
Test
Test 6. Have the employee attach respirator filters, put on, adjust, and seal check the respirator without assistance. The employee must be proficient at these tasks. 7. Remind the employee to keep eyes closed during testing. 8. Direct a stream of irritant smoke toward the respirator's face seal area as follows: • Begin at least 12 inches from the facepiece **AND** move the smoke around the whole perimeter of the mask • Gradually make two more passes around the perimeter of the facepiece, moving to within 6 inches of the respirator • **STOP** at any time the employee detects smoke in the facepiece. If this occurs a different respirator will need to be chosen and tested, beginning with sensitivity screening. 9. Have the employee perform appropriate fit-test exercises in Table 19 **IF** the employee has **NOT** had an involuntary response such as evidence of coughing, flinching, or other response, **OR** detected smoke in the facepiece. • Continue to direct smoke from a distance of 6 inches around the facepiece perimeter – If smoke is detected at any time the test has **FAILED.** A different respirator must be chosen and tested, starting with sensitivity screening – If **NO** smoke is detected proceed to Step 10. 10. Have the employee remove the respirator **AND** perform another sensitivity screening check as follows: • Continue to use the smoke tube used for fit testing • Carefully direct a **SMALL** amount of irritant smoke toward the employee – The test has been **PASSED IF** the employee responds to the smoke – The fit test is **VOIDED IF** the employee does **NOT** respond to the smoke.

Table 16

Ambient Aerosol Condensation Nuclei Counter (Portacount™) Test Procedure
Important: • This is a quantitative (QNFT) fit-test procedure • This method uses a particle counting instrument that measures and compares the particle concentration both inside and outside the respirator facepiece while the employee performs a series of test exercises • Particles in the ambient air are used as the test aerosol.
Test Preparations
1. Obtain a test instrument such as a Portacount™. 2. Have probed respirators available for each respirator model and size the employer uses, **OR** have a sampling adapter available if the employee's actual or chosen respirator will be tested. **Note:** • A probed respirator has a special fitting installed on the facepiece designed to connect with the end of the test instrument's plastic sampling tube so that air samples can be taken inside the facepiece. Probed respirators can be obtained from the respirator manufacturer, or distributor, **AND** can only be used for fit-testing purposes • Contact TSI Inc., **OR** the respirator's manufacturer to obtain probed respirators or facepiece sampling adapters. 3. Follow the test instrument manufacturer's instructions for test preparation, including particle, zero, and system checks. Make sure the instrument's pass **OR** fail criterion is programmed to the following **MINIMUM** performance levels: • For half-facepiece respirators, an overall minimum fit factor of 100 as a passing level • For full-facepiece respirators, an overall minimum fit factor of 500 as a passing level 4. Have high-efficiency particulate air (HEPA) filters, **OR** other respirator filters available that are capable of preventing significant penetration by particles generated by the test instrument such as, P100 or N95 series filters. • If you'll use a sampling adapter instead of probed respirators be sure to have the correct type for the respirators chosen.
Test
5. Properly attach the sampling line to the facepiece probe or sampling adapter. 6. Have the employee attach respirator filters, put on, properly adjust, and wear the respirator five minutes **BEFORE** the fit test. During this time you and the employee must evaluate the respirator's general fit by checking: • Proper chin placement • Properly tightened straps (do **NOT** over tighten) • Acceptable fit across the nose bridge • Respirator size. It must span the distance from nose to chin • To see if the respirator stays in position. **Note:** Wearing the respirator for five minutes permits the employee to make certain the respirator is comfortable **AND** allows for purging of ambient particles trapped inside the facepiece. 7. Have the employee perform a seal check. Make sure the sampling line is crimped to avoid leakage during the seal check. If **NO** leakage is detected, proceed to Step 8. If leakage is detected: • Determine the cause **AND** • If leakage is due to a poorly fitting facepiece, have the employee: – Choose another respirator size or model **AND** – Start again at Step 6. 8. Start the fit test cycle. • Follow the manufacturer's instructions for operating the test instrument • Have the employee perform the appropriate fit-test exercises in Table 19 – The test instrument will automatically stop and calculate the overall fit factor. Use this result to determine whether or not the test is passed

Ambient Aerosol Condensation Nuclei Counter (Portacount™) Test Procedure
■ The test has been **PASSED** if the overall fit factor is at least 100 for a half facepiece, **OR** 500 for a full facepiece ■ The test has **FAILED** if the overall fit factor is below 100 for a half facepiece or 500 for a full facepiece. **Note:** If the test has failed, have the employee select another respirator model or size following Table 11 **AND** repeat this procedure.

Table 17

Controlled Negative Pressure (CNP) Test Procedure
Important! • This is a quantitative fit-test (QNFT) procedure • This method determines respirator fit by measuring how much the facepiece leaks when it is subject to a slight negative pressure **AFTER** various premeasurement activities • Measurements occur while employees remain still **AND** hold their breath for 10 seconds • No test aerosols are used. Respirator cartridges aren't needed for this test.
Test Preparations
1. Make sure the individual conducting the fit test is thoroughly trained to perform this test. 2. Obtain a CNP test instrument such as a FitTester 3000™. Make sure: • Defaults are set at: – -15mm (-0.58 inches) of water test pressure **AND** – A modeled inspiratory flow rate of 53.8 liters per minute • It has an effective audio warning device that signals when employees fail to hold their breath. **Note:** • You are not required to obtain test recording and printing equipment such as computers OR printers. Hand recording results is acceptable • To see default settings, check the instrument's "REDON protocol." 3. Obtain facepiece adapters appropriate for each test respirator. **Note:** • Adapters are either a one-piece (for SCBA facepieces), OR two-piece (for dual cartridge facepieces) device providing a manifold and breathing valve system. For positive pressure respirators, you will need to obtain an additional fitting, available from the respirator manufacturer, to convert the facepiece to negative pressure • To obtain adapters, contact the CNP instrument's distributor, Occupational Health Dynamics, **OR** the respirator manufacturer.

Controlled Negative Pressure (CNP) Test Procedure
Test
Important! After the test, you must ask the employee about the comfort of the respirator **AND** if the respirator has become unacceptable, another size or model must be chosen and tested. 4. Explain the test procedure to the employee. 5. Train the employee on how to hold a breath for at least 20 seconds. 6. Prepare the respirator for the fit test as follows: • Remove or prop open the inhalation valves. If a breathing tube is present, disconnect it • Replace cartridges, if present, with the manifold and breathing valve adapter – For positive pressure facepieces, mount the manufacturer's additional fitting followed by the manifold-breathing valve adapter • Connect the respirator to the CNP device according to the CNP instrument manufacturer's directions. 7. Have the employee put on, adjust, and seal check the respirator. 8. Turn on the instrument **AND** have the employee stand and perform the fit-test exercises in Table 19. 9. Interpret the test results: • The test is **PASSED IF** the overall fit factor obtained is at least 100 for a half facepiece, or at least 500 for a full facepiece • The test has **FAILED IF** the fit factor is less than 100 for a half facepiece; 500 for a full facepiece – If the test has **FAILED** you must have the employee select another respirator model or size following the steps in Table 11 **AND** repeat this procedure, starting at Step 6.

Table 18

Generated Aerosol Test Procedure
Important: • This is a quantitative (QNFT) fit-test procedure • In this method, a test aerosol is used to challenge the facepiece seal while aerosol concentrations inside and outside the facepiece are measured during test exercises • Special equipment is needed to generate, disperse, detect, and measure test aerosols.
Test Preparations
1. Test aerosol. • Use a particulate, for example, corn oil, polyethylene glycol 400, di-2-ethyl hexyl sebacate, or sodium chloride. 2. Instrumentation. • Do **ALL** the following: – Obtain and use aerosol generation, dilution, and measurement systems appropriate for particulates – Use an aerosol-generating instrument that will maintain test concentrations within a 10% variation – Select a sampling instrument that allows for a computer record or strip chart record to be created ■ The record must show the rise and fall of test agent concentration during each inhalation and exhalation at fit factors of at least 2000. **Note:** Integrators, or computers that integrate the amount of test agent penetration leakage into the respirator for each exercise, may be used if a record of the readings is made. – Minimize the time interval between the activity and the recording of the activity so you can clearly connect what you see to what is being recorded. For example, use a small diameter and length of sampling line. 3. Test enclosure. • Do **ALL** the following: – Make sure the enclosure is equipped and constructed to effectively: ■ Maintain a uniform concentration of the test agent inside the enclosure. For example, the enclosure must be large enough to allow **ALL** employees freedom of movement during testing **WITHOUT** disturbing the test concentration or measurement instrument ■ Keep the test agent from contaminating the air outside the enclosure. For example, use a HEPA filter to purify exhausted air ■ Allow the individual conducting the fit test to view the employee during the test – Make sure the tubing used to collect samples from the enclosure **AND** respirator is the same material, diameter, **AND** length. This makes the effect of aerosol loss caused by deposition in each sample line equal – If sodium chloride is used, relative humidity inside the enclosure must be kept below 50%. 4. Prepare test respirators. • Do **ALL** the following: – Inspect test respirators regularly for missing parts **AND** damage – Keep test respirators in proper working order – Make sure in-mask sampling probes are: ■ Designed and installed so the air sample will be drawn from the employee's breathing zone; midway between the nose and mouth **AND** ■ The probe extends inside the facepiece at least 1/4 inch – Make sure sampling ports such as probes, or adapters on respirators are constructed and installed so they do **NOT:** ■ Block air flow into the sampling line ■ Leak ■ Interfere with the respirator's fit or performance • Have high efficiency particulate air (HEPA) filters **OR** P100 series filter available – Replace filters when increased breathing resistance is detected **OR** when the test agent has altered the filter material's integrity.
Test
Important! • Throughout the test, maintain the employee's exposure to any test agent below the established exposure limit. Exposures allowed must be based on exposure time and exposure limit duration • If a single peak penetration exceeds 5% for half facepieces OR 1% for full facepieces: – **STOP** the test **AND** – Have the employee select another respirator for testing. 5. Have the employee attach filters, put on, adjust, and seal check the respirator. • Be sure to crimp the sampling line to avoid pressure leaks during the seal check **AND** • Have the employee adjust the respirator straps, without assistance, so the fit is comfortable. Do **NOT** over tighten.

Generated Aerosol Test Procedure

6. **OPTIONAL Step.** To save time conduct a screening test to quickly identify poorly fitting respirators.

Note:

You may use a qualitative screening test **OR** an ambient aerosol condensation nuclei counter instrument in the count mode.

7. Make sure test aerosol concentration is reasonably stable.
   - If a canopy or shower curtain enclosure is used, determine stability of the test aerosol concentration **AFTER** the employee enters the enclosure.
8. Have the employee enter the test enclosure and connect the respirator to the sample lines.
9. Immediately after entering the enclosure measure test aerosol concentration inside the respirator.
   - Make sure the peak penetration does **NOT** exceed 5% for half facepieces, **OR** 1% for full facepieces.
10. Have employee perform the appropriate fit-test exercises in Table 19.
    - Do **NOT** adjust the respirator once exercises begin.
11. Calculate the overall fit factor as specified in Steps 12-13. The fit test is:
    - **PASSED IF** the minimum fit factor of 100 for half facepieces **OR** 500 for full facepieces is obtained

    OR
    - IF a passing fit factor is **NOT** obtained, the test has **FAILED** and you must have the employee select and test another respirator.

Calculations

Important!

- Do **NOT** count the grimace exercise measurements during these calculations
- Take into account the limitations of instrument detection when determining fit factors.

12. Calculate individual fit factors for **EACH** exercise by applying the following:

$$\text{Exercise fit factor (ffE)} = \frac{\text{Average test enclosure concentration}}{\text{Test aerosol concentration inside the respirator}}$$

- To determine the average test enclosure concentration use one of the following methods:
  - Arithmetic average of the concentration before and after each **test** (an average of two values per entire test)
  - Arithmetic average of concentration before and after each **exercise** (an average of two values per exercise)
  - True average measured continuously during the respirator sample
- Determine the test aerosol concentration inside the respirator in one of the following ways:
  - Average peak penetration values. Determine aerosol penetration for each exercise by:
    - Using integrators or computers that calculate the actual test agent penetration

    OR
    - Average the peak heights shown on the strip chart recording, graph, or by computer integration
  - Maximum peak penetration. Use strip chart recordings to determine the highest peak penetration for each exercise and use this value
  - Area under the peaks. Use computerized integration or other appropriate calculations to integrate the area under individual peaks for each exercise.

13. Using individual exercise fit factors (ffE) calculate the **overall fit factor** by doing **ALL** of the following:
    - Convert each exercise fit factor to a penetration value
    - Determine the average penetration value
    - Convert the average penetration value back to a fit factor

    OR
    - Use this equation to calculate the **overall fit factor:**

$$\text{Overall fit factor} = \frac{n}{1/ffE1 + 1/ffE2 + 1/ffE3 \ldots + 1/ffEn}$$

Table 19

Fit-Test Exercises

Important:

- This list applies when you use any fit test
- Employees tested must perform **ALL** exercises marked with an "X" as described for the fit-test procedure used
  - Once exercises begin, any adjustments made void the test AND you must begin again
  - After test exercises are completed, you must ask the employee about the comfort of the respirator. If it has become unacceptable, have the employee choose another one for testing
- When the controlled negative pressure procedure is used, **STOP and repeat** the test if the employee adjusts the respirator OR takes a breath and fails to hold it for 10 seconds

Fit-Test Exercises			
• Controlled negative pressure tests conducted according to the method published in 29 CFR 1910.134, Appendix A are an acceptable alternative to the method outlined below.			
	Fit-Test Procedures		
Description of Required Fit-Test Exercises	Qualitative Procedures	Quantitative Procedures; **EXCEPT** the **CNPP**	Controlled Negative Pressure Procedure (CNPP)
• Normal breathing – Breathe normally, while standing for one minute	X	X	
• Deep breathing – Breathe slowly and deeply while standing for one minute – Take caution to avoid hyperventilating	X	X	
• Head side to side – Slowly turn head from side to side while standing for one minute, pausing at each extreme position to inhale – Be careful to **NOT** bump the respirator	X	X	
• Head up and down – Slowly move head up and down while standing for one minute, inhaling in the up position – Be careful to **NOT** bump the respirator	X	X	
• Talking – Talk slowly and loud enough to be heard clearly by the individual conducting fit testing for one minute. Choose **ONE** of the following: ■ Read from a prepared text such as the Rainbow Passage[1] ■ Count backward from 100 ■ Recite a memorized poem or song.	X	X	
• Grimace – Smile or frown for fifteen seconds.		X	
• Bending over – Bend over to touch toes while standing. Repeat at a comfortable pace for one minute **OR** – Jog in place for one minute if the test enclosure, such as a hood, does not permit bending over	X	X	
• Normal breathing – Breathe normally while standing for one minute	X	X	
• Face forward – **Premeasurement activity:** Stand and breath normally, without talking – **Measurement position:** Face forward while holding breath for 10 seconds			X
• Bending over – **Premeasurement activity:** While standing, bend over to touch toes – **Measurement position:** Hold the bending position with face parallel to the floor while holding breath for 10 seconds			X
• Head shaking – **Premeasurement activity:** Vigorously shake head from side to side for 3 seconds while shouting or making the sound of "BRRRR" loudly – **Measurement position:** Face forward, while holding breath for 10 seconds			X
• Redon-1 – **Premeasurement activity:** Remove the respirator completely and put it back on			X

Fit-Test Exercises			
– **Measurement position:** Face forward while holding breath for 10 seconds			
• Redon-2 – Repeat the premeasurement activity and measurement position described in Redon-1			X

[1] The Rainbow Passage:
"When the sunlight strikes raindrops in the air, they act like a prism and form a rainbow. The rainbow is a division of white light into many beautiful colors. These take the shape of a long round arch, with its path high above, and its two ends apparently beyond the horizon. There is, according to legend, a boiling pot of gold at one end. People look, but no one ever finds it. When a man looks for something beyond reach, his friends say he is looking for the pot of gold at the end of the rainbow."

[Statutory Authority: RCW 49.17.010, 49.17.040, 49.17.050, 49.17.060. 05-01-166, § 296-307-62010, filed 12/21/04, effective 4/2/05.]

WAC 296-307-62015 Follow procedures established for cleaning and disinfecting respirators.

You must:

• Follow the procedure in Table 20 for cleaning and disinfecting respirators.

Table 20
Respirator Cleaning Procedure

Step	Task
1.	Remove filters, cartridges, canisters, speaking diaphragms, demand and pressure valve assemblies, hoses, or any components recommended by the manufacturer. • Discard or repair any defective parts.
2.	Wash components in warm (43°C (110°F) maximum) water with a mild detergent or with a cleaner recommended by the manufacturer • A stiff bristle (not wire) brush may be used to help remove the dirt • If the detergent or cleaner does not contain a disinfecting agent, respirator components should be immersed for two minutes in one of the following: – A bleach solution (concentration of 50 parts per million of chlorine). Make this by adding approximately one milliliter of laundry bleach to one liter of water at 43°C (110°F) – A solution of iodine (50 parts per million iodine). Make this in two steps: ■ First, make a tincture of iodine by adding 6-8 grams of solid ammonium iodide and/or potassium iodide to 100 cc of 45% alcohol approximately ■ Second, add 0.8 milliliters of the tincture to one liter of water at 43°C (110°F) to get the final solution – Other commercially available cleansers of equivalent disinfectant quality when used as directed, if their use is recommended or approved by the respirator manufacturer.
3.	Rinse components thoroughly in clean, warm (43°C (110°F) maximum), preferably, running water. **Note:** The importance of thorough rinsing cannot be overemphasized. Detergents or disinfectants that dry on facepieces could cause dermatitis. In addition, some disinfectants may cause deterioration of rubber or corrosion of metal parts, if not completely removed.
4.	Drain components.
5.	Air-dry components or hand dry components with a clean, lint-free cloth.
6.	Reassemble the facepiece components. • Replace filters, cartridges, and canisters, if necessary (for testing).
7.	Test the respirator to make sure all components work properly.

[Statutory Authority: RCW 49.17.010, 49.17.040, 49.17.050, 49.17.060. 05-01-166, § 296-307-62015, filed 12/21/04, effective 4/2/05.]

WAC 296-307-62020 Follow procedures established for seal checking respirators.

IMPORTANT:

• User seal checks are **NOT** a substitute for fit tests. See WAC 296-307-62010 for fit test procedures.

• You may use a seal check procedure recommended by the respirator manufacturer **INSTEAD** of the procedure outlined in Table 21 if you can demonstrate the procedure is based on a scientific study that, for example, demonstrates the procedure effectively identifies respirators that fit poorly when put on or adjusted.

You must:

• Make sure employees perform a user seal check as outlined in Table 21, **EACH TIME** the respirator is worn, to make sure the seal is adequate.

Table 21

User Seal Check Procedure
Important information for employees: • You need to conduct a seal check **each time** you put your respirator on **BEFORE** you enter the respirator use area. The purpose of a seal check is to make sure your respirator (which has been previously fit tested by your employer) is properly positioned on your face to prevent leakage during use and to detect functional problems • The procedure below has two parts; a positive pressure check and a negative pressure check. **You must complete both parts each time.** It should only take a few seconds to perform, once you learn it – If you cannot pass both parts, your respirator is NOT functioning properly, see your supervisor for further instruction.
Positive pressure check: 1. Remove exhalation valve cover, if removable. 2. Cover the exhalation valve completely with the palm of your hand **WHILE** exhaling gently to inflate the facepiece slightly. 3. The respirator facepiece should remain inflated (indicating a build-up of positive pressure and **NO** outward leakage). • If you detect **NO** leakage, replace the exhalation valve cover (if removed), and proceed to conduct the negative pressure check • If you detect evidence of leakage, reposition the respirator (after removing and inspecting it), and try the positive pressure check again.
Negative pressure check: 4. Completely cover the inhalation opening(s) on the cartridges or canister with the palm(s) of your hands **WHILE** inhaling gently to collapse the facepiece slightly. • If you cannot use the palm(s) of your hands to effectively cover the inhalation openings on cartridges or canisters, you may use: – Filter seal(s) (if available) **OR** – Thin rubber gloves. 5. Once the facepiece is collapsed, hold your breath for 10 seconds **WHILE** keeping the inhalation openings covered. 6. The facepiece should remain slightly collapsed (indicating negative pressure and **NO** inward leakage). • If you detect **NO** evidence of leakage, the tightness of the facepiece is considered adequate, the procedure is completed, and you may now use the respirator • If you detect leakage, reposition the respirator (after removing and inspecting it) and repeat **BOTH** the positive and negative fit checks.

[Statutory Authority: RCW 49.17.010, 49.17.040, 49.17.050, 49.17.060. 05-01-166, § 296-307-62020, filed 12/21/04, effective 4/2/05.]

WAC 296-307-622 Definitions.

Air-purifying respirator (APR)

A respirator equipped with an air-purifying element such as a filter, cartridge, or canister, **OR** having a filtering facepiece, for example, a dust mask.

The element or filtering facepiece is designed to remove specific contaminants, such as particles, vapors, or gases, from air that passes through it.

Air-line respirator

An atmosphere-supplying respirator for which breathing air is drawn from a source separate from and not worn by the user, such as:

• A cylinder or a tank
• A compressor
• An uncontaminated environment.

Air supplied respirator (see air-line respirator)

Assigned protection factor (APF)

Indicates the expected level of workplace respiratory protection WHEN the respirator is:

• Functioning properly

AND

• Fitted to the user

AND

• Worn by trained individuals

AND

• Used with the limitations specified on the NIOSH approval label.

Atmosphere-supplying respirator

A respirator that supplies the user with breathing air from sources, such as:

• A cylinder or a tank
• A compressor
• An uncontaminated environment.

Breathing air

Air supplied to an atmosphere-supplying respirator. This air meets the specifications found in WAC 296-307-616.

Canister or cartridge (air-purifying)

Part of an air-purifying respirator that consists of a container holding materials such as fiber, treated charcoal, or a combination of the two, that removes contaminants from the air passing through the cartridge or canister.

Cartridge respirator (see also air-purifying respirator)

An air-purifying respirator equipped with one or more cartridges. These respirators have a facepiece made from silicone, rubber OR other plastic-like materials.

Demand respirator

An atmosphere-supplying respirator that sends breathing air to the facepiece only when suction (negative pressure) is created inside the facepiece by inhalation. Demand respirators are **"negative pressure"** respirators.

Dust mask

A name used to refer to filtering-facepiece respirators. Dust masks may or may not be NIOSH certified. See filtering facepiece.

Emergency respirator

Respirators suitable for rescue, escape, or other activities during emergency situations.

Emergency situation

Any occurrence that could **OR** does result in a significant uncontrolled release of an airborne contaminant. Causes of emergency situations include, but are not limited to, equipment failure, rupture of containers, or failure of control equipment.

End-of-service-life indicator (ESLI)

A system that warns the air-purifying respirator user that cartridges or canisters must be changed. An example of an ESLI is a dot on the respirator cartridge that changes color.

Escape-only respirator

A respirator that can only be used to exit during emergencies. Look for this use limitation on the respirator's NIOSH approval label.

Exposed, or exposure

The contact an employee has with a toxic substance, harmful physical agent, or oxygen deficient condition. Exposure can occur through various routes of entry, such as inhalation, ingestion, skin contact, or skin absorption.

Filter

Fibrous material that removes dust, spray, mist, fume, fog, smoke particles, **OR** other aerosols from the air.

Filtering-facepiece respirator

A tight-fitting, half-facepiece, negative-pressure, particulate air-purifying respirator with the facepiece **MAINLY** composed of filter material. These respirators do not use cartridges or canisters and may have sealing surfaces composed of rubber, silicone or other plastic-like materials. They are sometimes referred to as "dust masks."

Fit factor

A number providing an estimate of fit for a particular respiratory inlet covering to a specific individual during quantitative fit testing.

Fit test (see also qualitative fit test and quantitative fit test)

Fit testing is an activity where the facepiece seal of a respirator is challenged, using a WISHA accepted procedure, to determine if the respirator provides an adequate seal.

Full-facepiece respirator

A tight-fitting respirator that covers the wearer's nose, mouth, and eyes.

Gas mask

An air-purifying respirator equipped with one or more canisters. These respirators have a facepiece made from silicone, rubber OR other plastic-like materials.

Half-facepiece respirator

A tight-fitting respirator that only covers the wearer's nose and mouth.

Helmet

The rigid part of a respirator that covers the wearer's head AND also provides head protection against impact or penetration.

High-efficiency particulate air filter (HEPA)

A powered air purifying respirator (PAPR) filter that removes at least 99.97% of monodisperse dioctyl phthalate (DOP) particles with a mean particle diameter of 0.3 micrometer from contaminated air.

Note: Filters designated, under 42 CFR Part 84, as an "N100," "R100," or "P100" provide the same filter efficiency (99.97%) as HEPA filters.

Hood

The part of a respirator that completely covers the wearer's head and neck AND may also cover some or all of the shoulders and torso.

Immediately dangerous to life or health (IDLH)

An atmospheric condition that would:

• Cause an immediate threat to life

OR

• Cause permanent or delayed adverse health effects

OR

• Interfere with an employee's ability to escape.

Licensed healthcare professional (LHCP)

An individual whose legally permitted scope of medical practice allows him or her to provide **SOME OR ALL** of the healthcare services required for respirator users' medical evaluations.

Loose-fitting facepiece

A respiratory inlet covering that is designed to form a partial seal with the face.

Negative-pressure respirator

Any tight-fitting respirator in which the air pressure inside the facepiece is less than the air pressure outside the respirator during inhalation.

NIOSH

The National Institute for Occupational Safety and Health. NIOSH is the federal agency that certifies respirators for occupational use.

Oxygen deficient

An atmosphere with an oxygen content below 19.5% by volume.

Permissible exposure limit (PEL)

Permissible exposure limits (PELs) are employee exposures to toxic substances or harmful agents that must not be exceeded. PELs are specified in applicable WISHA chapters.

Positive-pressure respirator

A respirator in which the air pressure inside the respiratory-inlet covering is greater than the air pressure outside the respirator.

Powered air-purifying respirators (PAPRs)

An air-purifying respirator equipped with a blower that draws ambient air through cartridges or canisters. These respirators, as a group, are **NOT** classified as positive pressure respirators and must not be used as such.

Pressure-demand respirator

A positive-pressure atmosphere-supplying respirator that sends breathing air to the respiratory inlet covering when the positive pressure is reduced inside the facepiece by inhalation or leakage.

Qualitative fit test (QLFT)

A test that determines the adequacy of respirator fit for an individual. The test relies on the employee's ability to detect a test substance. Test results are either "pass" or "fail."

Quantitative fit test (QNFT)

A test that determines the adequacy of respirator fit for an individual. The test relies on specialized equipment that performs numeric measurements of leakage into the respiratory inlet covering. Test results are used to calculate a "fit factor."

Respiratory hazard

Harmful airborne hazards and oxygen deficiency that are addressed in WAC 296-307-624, Identifying and controlling airborne hazards and oxygen deficiency.

Required use

Respirator use:

• That is necessary to protect employees from respiratory hazards

OR

• That the employer decides to require for his or her own reasons. For example, the employer decides to follow more rigorous exposure limits

• The employer for his or her own reasons. For example, the employer decides to follow more rigorous exposure limits, **OR** the employer is required to follow a medical recommendation.

Respirator

A type of personal protective equipment designed to protect the wearer from harmful airborne hazards, oxygen deficiency, or both.

Respiratory inlet covering

The part of a respirator that forms the protective barrier between the user's respiratory tract and an air-purifying device or breathing air source or both. The respiratory inlet covering may be a facepiece, helmet, hood, suit, or mouthpiece respirator with nose clamp.

Seal check

Actions conducted by the respirator user each time the respirator is put on, to determine if the respirator is properly seated on the face.

Self-contained breathing apparatus (SCBA)

An atmosphere-supplying respirator designed for the breathing air source, to be carried by the user.

Service-life

The period of time that a respirator, filter or sorbent, or other respiratory equipment provides adequate protection to the wearer. For example, the period of time that sorbent cartridge is effective for removing a harmful substance from the air.

Sorbent

Rigid, porous material, such as charcoal, used to remove vapor or gas from the air.

Supplied-air respirator (see air-line respirator)

Tight-fitting facepiece

A respiratory inlet covering forming a complete seal with the face OR neck. Mouthpiece respirators aren't tight-fitting facepieces.

Voluntary use

Respirator use that is requested by the employee **AND** permitted by the employer when **NO** respiratory hazard exists.

[Statutory Authority: RCW 49.17.010, 49.17.040, 49.17.050, 49.17.060. 05-01-166, § 296-307-622, filed 12/21/04, effective 4/2/05.]

Part Y-6
Respiratory Hazards

WAC 296-307-624 Scope.

This part applies **only** if your employees:

• Are exposed to a respiratory hazard

OR

• Could be exposed to one of the specific hazards listed below.

This part applies to any workplace with potential or actual employee exposure to respiratory hazards. It requires you to protect employees from respiratory hazards by applying this protection strategy:

• Evaluate employee exposures to determine if controls are needed

• Use feasible controls. For example, enclose or confine the operation, use ventilation systems, or substitute with less toxic material

• Use respirators if controls are not feasible or if they cannot completely remove the hazard.

Definition:

Exposed or exposure:

The contact an employee has with a toxic substance, harmful physical agent or oxygen deficient condition, whether or not protection is provided by respirators or other personal protective equipment (PPE). Exposure can occur through various routes of entry, such as inhalation, ingestion, skin contact, or skin absorption.

Note: Examples of substances that may be respiratory hazards when airborne include:

- Chemicals listed in Table 3
- Any substance
  - Listed in the latest edition of the NIOSH Registry of Toxic Effects of Chemical Substances
  - For which positive evidence of an acute or chronic health hazard exists through tests conducted by, or known to, the employer
  - That may pose a hazard to human health as stated on a material safety data sheet kept by, or known to, the employer
- Atmospheres considered oxygen deficient
- Biological agents such as harmful bacteria, viruses or fungi
  - Examples include airborne TB aerosols and anthrax
- Pesticides with a label requirement for respirator use
- Chemicals used as crowd control agents such as pepper spray
- Chemicals present at clandestine drug labs.

These substances can be airborne as dusts, fibers, fogs, fumes, mists, gases, smoke, sprays, vapors, or aerosols.

Reference:

- Substances in Table 3 that are marked with an X in the "skin" column may require personal protective equipment (PPE). See WAC 296-307-100, Personal protective equipment, for additional information and requirements.
- If any of the following hazards are present in your workplace, you will need both this part and any of the following specific rules that apply:

Hazard	Rule that applies
Acrylonitrile	WAC 296-62-07336
Arsenic (inorganic)	WAC 296-62-07347
Asbestos	WAC 296-62-077
Benzene	WAC 296-62-07523
Butadiene	WAC 296-62-07460
Cadmium	WAC 296-62-074 through 296-62-07449 or 296-155-174
Carcinogens	Chapter 296-62 WAC, Part F
Coke ovens	Chapter 296-62 WAC, Part O
Cotton dust	Chapter 296-62 WAC, Part N
1,2-Dibromo-3-chloropropane	WAC 296-62-07342
Ethylene oxide	WAC 296-62-07355
Formaldehyde	WAC 296-62-07540
Lead	WAC 296-62-07521 or 296-155-176
Methylene chloride	WAC 296-62-07470
Methylenedianiline	WAC 296-62-076 or 296-155-173
Thiram	WAC 296-62-07519
Vinyl chloride	WAC 296-62-07329

[Statutory Authority: RCW 49.17.010, 49.17.040, 49.17.050, 49.17.060. 05-01-166, § 296-307-624, filed 12/21/04, effective 4/2/05.]

WAC 296-307-626 Evaluate and control employee exposures.

Summary:

Your responsibility:

To protect your employees from exposure to respiratory hazards in the workplace by identifying and controlling the hazards.

You must:

Identify and evaluate employee exposures
WAC 296-307-62605
Control employee exposures
WAC 296-307-62610
Use respirators
WAC 296-307-62615
Notify employees
WAC 296-307-62620
Permissible exposure limits of air contaminants
WAC 296-307-62625.

[Statutory Authority: RCW 49.17.010, 49.17.040, 49.17.050, 49.17.060. 05-01-166, § 296-307-626, filed 12/21/04, effective 4/2/05.]

WAC 296-307-62605 Identify and evaluate respiratory hazards.

You must:

• Make sure employees are protected from potentially hazardous exposure while you perform your evaluation

• Perform your evaluation without considering the protection provided to employees by a respirator

• Determine the form of the hazard, such as dust, mist, gas, oxygen deficiency, or biological agent

• Make sure you consider:

– Potential emergency and rescue situations that may occur, such as equipment or power failures, uncontrolled chemical reactions, fire, explosion, or human error

– Workplace conditions such as work processes, types of material, control methods, work practices and environmental conditions.

• Determine or reasonably estimate whether any employee is or could be exposed to any of the following:

– Any airborne substance above a permissible exposure limit (PEL) listed in Table 3

– A substance at or above the action level (AL) specified in the rule for that substance

– Any other respiratory hazard.

• Use **any** of the following to determine employee exposure:

– Information that would allow an estimate of the level of employee exposure, such as MSDSs or pesticide labels, observations, measurements or calculations

– Data demonstrating that a particular product, material or activity cannot result in employee exposure at or above the AL or PEL

– Personal air samples that represent an employee's usual or worst case exposure for the entire shift.

Note:
- Rules for specific substances may contain additional requirements for determining employee exposure.
- Use methods of sampling and analysis that have been validated by the laboratory performing the analysis.
- Samples from a representative group of employees may be used for other employees performing the same work activities when the duration and level of exposure are similar.

You must:

• Consider the atmosphere to be immediately dangerous to life or health (IDLH) when you cannot determine or reasonably estimate employee exposure

• Make sure employee exposure, to 2 or more substances with additive health effects, is evaluated using this formula:

$$E_m = \frac{C_1}{L_1} + \frac{C_2}{L_2} + \ldots + \frac{C_n}{L_n}$$

The symbol	Is the . . .
E	Equivalent exposure for the mixture. **When the value of E is greater than 1, a respiratory hazard is present.**
C	Concentration of a particular substance.
L	TWA, STEL, or ceiling for that substance from Table 3.

[Statutory Authority: RCW 49.17.010, 49.17.040, 49.17.050, 49.17.060. 05-01-166, § 296-307-62605, filed 12/21/04, effective 4/2/05.]

WAC 296-307-62610 Control employee exposures.

You must:

• Use feasible controls to protect employees from exposure to respiratory hazards by:

– Reducing employee exposure to a level that removes the respiratory hazard, such as to a level below the permissible exposure limit (PEL) in Table 3;

OR

– Reducing the exposure to the lowest achievable level, when the respiratory hazard cannot be removed.

Note: The following table gives you examples of control methods.

Table 1
Examples of Possible Controls

Control:	For example:
Using a different chemical (substitution)	• Choose a chemical with a lower evaporation rate or vapor pressure. • Choose a chemical without hazardous ingredients.
Changing a process to lessen emissions	• Use hand rolling or paint dipping instead of paint spraying. • Bolt items instead of welding them.
Separating employees from emissions areas and sources	• Use control rooms. • Build an enclosure around process machinery or other emissions sources. • Automate a process.
Removing emissions at or near the source (local exhaust ventilation)	• Install exhaust hoods or slots to capture emissions. • Use an exhausted enclosure (like a blasting cabinet or laboratory hood).
Diluting and removing emissions in the work area (general exhaust ventilation)	• Allow natural air movement to create an adequate airflow through an area. • Use mechanical fans.

Control:	For example:
Modify work practices	• Change the position of the worker relative to the work so fumes, vapors, or smoke do not go into their face.
Rotate employees – Some specific rules prohibit the use of this control method	• Move employees to another job that is without exposure, on a schedule to keep their total exposure below the permissible exposure limit.

[Statutory Authority: RCW 49.17.010, 49.17.040, 49.17.050, 49.17.060. 05-01-166, § 296-307-62610, filed 12/21/04, effective 4/2/05.]

WAC 296-307-62615 Use respirators.

You must:

• Require employees to use respiratory protection when respiratory hazards have not been removed using feasible controls. For example, use respirators at any of the following times:

– While controls are being evaluated or put in place

– When the respiratory hazard is not completely removed

– When controls are **not** feasible.

Reference: See WAC 296-307-594, Respirators, for respirator program requirements.

[Statutory Authority: RCW 49.17.010, 49.17.040, 49.17.050, 49.17.060. 05-01-166, § 296-307-62615, filed 12/21/04, effective 4/2/05.]

WAC 296-307-62620 Notify employees.

You must:

• Notify employees who are or may be exposed to respiratory hazards, as specified in Table 2.

Note: • The notification may be provided either individually, to a group, or by posting of results in an appropriate location that's accessible to affected employees.

Table 2
Notification Requirements

Notify employees of:	As follows:
Any exposure result above a permissible exposure limit (PEL)	Within five business days, after the employee's exposure result is known to the employer
The corrective action being taken to reduce employee exposure to or below the PEL **AND** The schedule for completion of the corrective action and any reasons why exposures cannot be lowered to below the PEL	Within fifteen business days, after the employee's exposure result is known to the employer
An exposure to these substances: • Acrylonitrile • Arsenic (inorganic) • Asbestos • Benzene • Butadiene • Cadmium • Coke oven emissions • Cotton dust • 1,2-Dibromo-3-chloropropane • Ethylene oxide • Formaldehyde • Lead • Methylene chloride • Methylenedianiline • Vinyl chloride	In writing, as specified in the rule specific to the substance

[Statutory Authority: RCW 49.17.010, 49.17.040, 49.17.050, 49.17.060. 05-01-166, § 296-307-62620, filed 12/21/04, effective 4/2/05.]

WAC 296-307-62625 Permissible exposure limits of air contaminants.

IMPORTANT:

The following information applies to Table 3, Permissible Exposure Limits for Air Contaminants.

• Exposure needs to be determined from personal air samples taken in the breathing zone or from monitoring representative of the employee's breathing zone.

• Ppm refers to parts of vapor or gas per million parts of air by volume, at 25 degrees C and 760 mm Hg pressure.

• Mg/m^3 refers to milligrams of substance per cubic meter of air.

• For a metal that is measured as the metal itself, only the CAS number for the metal is given. The CAS numbers for individual compounds of the metal are not provided. For more information about CAS registry numbers see the website: http://www.cas.org.

• Time weighted averages (TWA_8) represent the maximum allowed average exposure for any 8-hour time period. For work periods longer than 8 hours the TWA_8 needs to be determined using the 8 continuous hours with the highest average concentration.

• Short-term exposure limits (STEL) represent maximum allowed average exposure for any fifteen-minute period, unless another time period is noted in Table 3.

• The ceiling represents the maximum allowed exposure for the shortest time period that can feasibly be measured.

• An "X" in the "skin" column indicates the substance can be absorbed through the skin, either by airborne or direct contact.

• Requirements for the use of gloves, coveralls, goggles, and other personal protective equipment can be found in WAC 296-307-100.

• The respirable fraction of particulate is measured by sampling with a size-selector having the following characteristics:

Mean aerodynamic diameter in micrometers	Percent passing the selector
1	97
2	91
3	74
4	50
5	30
6	17
7	9
8	5
10	1

Table 3 "Permissible Exposure Limits for Air Contaminants"

Substance	CAS	TWA_8	STEL	Ceiling	Skin
Abate (Temephos)	3383-96-8	——	——	——	——
Total particulate	——	10 mg/m^3	20 mg/m^3	——	——
Respirable fraction	——	5 mg/m^3	10 mg/m^3	——	——
Acetaldehyde	75-07-0	100 ppm	150 ppm	——	——
Acetic acid	64-19-7	10 ppm	20 ppm	——	——
Acetic anhydride	108-24-7	——	——	5 ppm	——
Acetone	67-64-1	750 ppm	1,000 ppm	——	——
Acetonitrile	75-05-8	40 ppm	60 ppm	——	——
2-Acetylaminofluorene (see WAC 296-62-073)	53-96-3	——	——	——	——
Acetylene	74-86-2	Simple asphyxiant	——	——	——
Acetylene dichloride (1,2-Dichloroethylene)	540-59-0	200 ppm	250 ppm	——	——
Acetylene tetrabromide	79-27-6	1 ppm	3 ppm	——	——
Acetylsalicylic acid (Aspirin)	50-78-2	5 mg/m^3	10 mg/m^3	——	——
Acrolein	107-02-8	0.1 ppm	0.3 ppm	——	——
Acrylamide	79-06-1	0.03 mg/m^3	0.09 mg/m^3	——	X
Acrylic acid	79-10-7	10 ppm	20 ppm	——	X
Acrylonitrile (Vinyl cyanide) (see WAC 296-62-07336)	107-13-1	2 ppm	10 ppm	——	——
Aldrin	309-00-2	0.25 mg/m^3	0.75 mg/m^3	——	X
Allyl alcohol	107-18-6	2 ppm	4 ppm	——	X
Allyl chloride	107-05-1	1 ppm	2 ppm	——	——
Allyl glycidyl ether (AGE)	106-92-3	5 ppm	10 ppm	——	——
Allyl propyl disulfide	2179-59-1	2 ppm	3 ppm	——	——
alpha-Alumina (Aluminum oxide)	1344-28-1	——	——	——	——
Total particulate	——	10 mg/m^3	20 mg/m^3	——	——
Respirable fraction	——	5 mg/m^3	10 mg/m^3	——	——
Aluminum (as Al)	7429-90-5	——	——	——	——
Total particulate	——	10 mg/m^3	20 mg/m^3	——	——
Respirable fraction	——	5 mg/m^3	10 mg/m^3	——	——
Pyro powders	——	5 mg/m^3	10 mg/m^3	——	——
Welding fumes	——	5 mg/m^3	10 mg/m^3	——	——
Soluble salts	——	2 mg/m^3	4 mg/m^3	——	——
Alkyls (NOC)	——	2 mg/m^3	4 mg/m^3	——	——
Aluminum oxide (Alundum, Corundum)	7429-90-5	——	——	——	——
Total particulate	——	10 mg/m^3	20 mg/m^3	——	——
Respirable fraction	——	5 mg/m^3	10 mg/m^3	——	——
4-Aminodiphenyl (see WAC 296-62-073)	92-67-1	——	——	——	——
2-Aminoethanol (Ethanolamine)	141-43-5	3 ppm	6 ppm	——	——
2-Aminopyridine	504-29-0	0.5 ppm	1.5 ppm	——	——
Amitrole	61-82-5	0.2 mg/m^3	0.6 mg/m^3	——	——
Ammonia	7664-41-7	25 ppm	35 ppm	——	——
Ammonium chloride, fume	12125-02-9	10 mg/m^3	20 mg/m^3	——	——
Ammonium sulfamate (Ammate)	7773-06-0	——	——	——	——
Total particulate	——	10 mg/m^3	20 mg/m^3	——	——
Respirable fraction	——	5.0 mg/m^3	10 mg/m^3	——	——
n-Amyl acetate	628-63-7	100 ppm	150 ppm	——	——
sec-Amyl acetate	626-38-0	125 ppm	156 ppm	——	——
Aniline and homologues	62-53-3	2 ppm	4 ppm	——	X
Anisidine (o, p-isomers)	29191-52-4	0.1 ppm	0.3 ppm	——	X
Antimony and compounds (as Sb)	7440-36-0	0.5 mg/m^3	1.5 mg/m^3	——	——
ANTU (alpha Naphthyl thiourea)	86-88-4	0.3 mg/m^3	0.9 mg/m^3	——	——
Argon	7440-37-1	Simple asphyxiant	——	——	——
Arsenic, organic compounds (as As)	7440-38-2	0.2 mg/m^3	0.6 mg/m^3	——	——
Arsenic, inorganic compounds (as As) (when use is covered by WAC 296-62-07347)	7440-38-2	0.01 mg/m^3	——	——	——
Arsenic, inorganic compounds (as As) (when use is not covered by WAC 296-62-07347)	7440-38-2	0.2 mg/m^3	0.6 mg/m^3	——	——
Arsine	7784-42-1	0.05 ppm	0.15 ppm	——	——

Table 3 "Permissible Exposure Limits for Air Contaminants"

Substance	CAS	TWA_8	STEL	Ceiling	Skin
Asbestos (see WAC 296-62-077)	——	——	——	——	——
Asphalt (Petroleum fumes)	8052-42-4	5 mg/m^3	10 mg/m^3	——	——
Atrazine	1912-24-9	5 mg/m^3	10 mg/m^3	——	——
Azinphos methyl (Guthion)	86-50-0	0.2 mg/m^3	0.6 mg/m^3	——	X
Azodrin (Monocrotophos)	6923-22-4	0.25 mg/m^3	0.75 mg/m^3	——	——
Barium, soluble compounds (as Ba)	7440-39-3	0.5 mg/m^3	1.5 mg/m^3	——	——
Barium sulfate	7727-43-7	——	——	——	——
Total particulate	——	10 mg/m^3	20 mg/m^3	——	——
Respirable fraction	——	5 mg/m^3	10 mg/m^3	——	——
Baygon (Propoxur)	114-26-1	0.5 mg/m^3	1.5 mg/m^3	——	——
Benomyl	17804-35-2	——	——	——	——
Total particulate	——	10 mg/m^3	20 mg/m^3	——	——
Respirable fraction	——	5 mg/m^3	10 mg/m^3	——	——
Benzene (see WAC 296-62-07523)	71-43-2	1 ppm	5 ppm	——	——
Benzidine (see WAC 296-62-073)	92-87-5	——	——	——	——
p-Benzoquinone (Quinone)	106-51-4	0.1 ppm	0.3 ppm	——	——
Benzo(a) pyrene (Coal tar pitch volatiles)	65996-93-2	0.2 mg/m^3	0.6 mg/m^3	——	——
Benzoyl peroxide	94-36-0	5 mg/m^3	10 mg/m^3	——	——
Benzyl chloride	100-44-7	1ppm	3 ppm	——	——
Beryllium and beryllium compounds (as Be)	7440-41-7	0.002 mg/m^3	0.005 mg/m^3 (30 min.)	0.025 mg/m^3	——
Biphenyl (Diphenyl)	92-52-4	0.2 ppm	0.6 ppm	——	——
Bismuth telluride, undoped	1304-82-1	——	——	——	——
Total particulate	——	10 mg/m^3	20 mg/m^3	——	——
Respirable fraction	——	5 mg/m^3	10 mg/m^3	——	——
Bismuth telluride, Se-doped	——	5 mg/m^3	10 mg/m^3	——	——
Borates, tetra, sodium salts	——	——	——	——	——
Anhydrous	1330-43-4	1 mg/m^3	3 mg/m^3	——	——
Decahydrate	1303-96-4	5 mg/m^3	10 mg/m^3	——	——
Pentahydrate	12179-04-3	1 mg/m^3	3 mg/m^3	——	——
Boron oxide	1303-86-2	——	——	——	——
Total particulate	——	10 mg/m^3	20 mg/m^3	——	——
Boron tribromide	10294-33-4	——	——	1 ppm	——
Boron trifluoride	6737-07-2	——	——	1 ppm	——
Bromacil	314-40-9	1 ppm	3 ppm	——	——
Bromine	7726-95-6	0.1 ppm	0.3 ppm	——	——
Bromine pentafluoride	7789-30-2	0.1 ppm	0.3 ppm	——	——
Bromochloromethane (Chlorobromomthane)	74-97-5	200 ppm	250 ppm	——	——
Bromoform	15-25-2	0.5 ppm	1.5 ppm	——	X
Butadiene (1,3-butadiene)	106-99-0	1 ppm	5 ppm	——	——
Butane	106-97-8	800 ppm	1,000 ppm	——	——
Butanethiol (Butyl mercaptan)	109-79-5	0.5 ppm	1.5 ppm	——	——
2-Butanone (Methyl ethyl ketone)	78-93-3	200 ppm	300 ppm	——	——
2-Butoxy ethanol (Butyl cellosolve)	111-76-2	25 ppm	38 ppm	——	X
n-Butyl acetate	123-86-4	150 ppm	200 ppm	——	——
sec-Butyl acetate	105-46-4	200 ppm	250 ppm	——	——
tert-Butyl acetate	540-88-5	200 ppm	250 ppm	——	——
Butyl acrylate	141-32-2	10 ppm	20 ppm	——	——
n-Butyl alcohol	71-36-3	——	——	50 ppm	X
sec-Butyl alcohol	78-92-2	100 ppm	150 ppm	——	——
tert-Butyl alcohol	75-65-0	100 ppm	150 ppm	——	——
Butylamine	109-73-9	——	——	5 ppm	X
Butyl cellosolve (2-Butoxy ethanol)	111-76-2	25 ppm	38 ppm	——	——
tert-Butyl chromate (as CrOs)	1189-85-1	——	——	0.1 mg/m^3	X
n-Butyl glycidyl ether (BGE)	2426-08-6	25 ppm	38 ppm	——	——
n-Butyl lactate	138-22-7	5 ppm	10 ppm	—-	——
Butyl mercaptan	109-79-5	0.5 ppm	1.5 ppm	——	——
o-sec-Butylphenol	89-72-5	5 ppm	10 ppm	——	X
p-tert-Butyl-toluene	98-51-1	10 ppm	20 ppm	——	——

Table 3 "Permissible Exposure Limits for Air Contaminants"

Substance	CAS	TWA_8	STEL	Ceiling	Skin
Cadmium oxide fume (as Cd) (see WAC 296-62-074)	1306-19-0	0.005 mg/m^3	——	——	——
Cadmium dust and salts (as Cd) (see WAC 296-62-074)	7440-43-9	0.005 mg/m^3	——	——	——
Calcium arsenate (see WAC 296-62-07347)	——	0.01 mg/m^3	——	——	——
Calcium carbonate	1317-65-3	——	——	——	——
Total particulate	——	10 mg/m^3	20 mg/m^3	——	——
Respirable fraction	——	5 mg/m^3	10 mg/m^3	——	——
Calcium cyanamide	156-62-7	0.5 mg/m^3	1.5 mg/m^3	——	——
Calcium hydroxide	1305-62-0	5 mg/m^3	10 mg/m^3	——	——
Calcium oxide	1305-78-8	2 mg/m^3	4 mg/m^3	——	——
Calcium silicate	1344-95-2	——	——	——	——
Total particulate	——	10 mg/m^3	20 mg/m^3	——	——
Respirable fraction	——	5 mg/m^3	10 mg/m^3	——	——
Calcium sulfate	7778-18-9	——	——	——	——
Total particulate	——	10 mg/m^3	20 mg/m^3	——	——
Respirable fraction	——	5 mg/m^3	10 mg/m^3	——	——
Camphor (synthetic)	76-22-2	2 mg/m^3	4 mg/m^3	——	——
Caprolactam	105-60-2	——	——	——	——
Dust	——	1 mg/m^3	3 mg/m^3	——	——
Vapor	——	5 ppm	10 ppm	——	——
Captafol (Difolatan)	2425-06-1	0.1 mg/m^3	0.3 mg/m^3	——	X
Captan	133-06-2	5 mg/m^3	10 mg/m^3	——	——
Carbaryl (Sevin)	63-25-2	5 mg/m^3	10 mg/m^3	——	——
Carbofuran (Furadon)	1563-66-2	0.1 mg/m^3	0.3 mg/m^3	——	——
Carbon black	1333-86-4	3.5 mg/m^3	7 mg/m^3	——	——
Carbon dioxide	124-38-9	5,000 ppm	30,000 ppm	——	——
Carbon disulfide	75-15-0	4 ppm	12 ppm	——	X
Carbon monoxide	630-08-0	35 ppm	200 ppm (5 min.)	1,500 ppm	——
Carbon tetrabromide	558-13-4	0.1 ppm	0.3 ppm	——	——
Carbon tetrachloride (Tetrachloromethane)	56-23-5	2 ppm	4 ppm	——	X
Carbonyl chloride (Phosgene)	7803-51-2	0.1 ppm	0.3 ppm	——	——
Carbonyl fluoride	353-50-4	2 ppm	5 ppm	——	——
Catechol (Pyrocatechol)	120-80-9	5 ppm	10 ppm	——	X
Cellosolve acetate (2-Ethoxyethylacetate)	111-15-9	5 ppm	10 ppm	——	X
Cellulose (paper fiber)	9004-34-6	——	——	——	——
Total particulate	——	10 mg/m^3	20 mg/m^3	——	——
Respirable fraction	——	5 mg/m^3	10 mg/m^3	——	——
Cesium hydroxide	21351-79-1	2 mg/m^3	4 mg/m^3	——	——
Chlordane	57-74-9	0.5 mg/m^3	1.5 mg/m^3	——	X
Chlorinated camphene (Toxaphen)	8001-35-2	0.5 mg/m^3	1 mg/m^3	——	X
Chlorinated diphenyl oxide	55720-99-5	0.5 mg/m^3	1.5 mg/m^3	——	——
Chlorine	7782-50-5	0.5 ppm	——	1 ppm	——
Chlorine dioxide	10049-04-4	0.1 ppm	0.3 ppm	——	——
Chlorine trifluoride	7790-91-2	——	——	0.1 ppm	——
Chloroacetaldehyde	107-20-0	——	——	1 ppm	——
a-Chloroacetophenone (Phenacyl chloride)	532-21-4	0.05 ppm	0.15 ppm	——	——
Chloroacetyl chloride	79-04-9	0.05 ppm	0.15 ppm	——	——
Chlorobenzene (Monochlorobenzene)	108-90-7	75 ppm	113 ppm	——	——
o-Chlorobenzylidene malononitrile (OCBM)	2698-41-1	——	——	0.05 ppm	X
Chlorobromomethane	74-97-5	200 ppm	250 ppm	——	——
2-Chloro-1, 3-butadiene (beta-Chloroprene)	126-99-8	10 ppm	20 ppm	——	X
Chlorodifluoromethane	75-45-6	1,000 ppm	1,250 ppm	——	——
Chlorodiphenyl (42% Chlorine) (PCB) (Polychlorobiphenyls)	53469-21-9	1 mg/m^3	3 mg/m^3	——	X
Chlorodiphenyl (54% Chlorine) (Polychlorobiphenyls (PCB))	11097-69-1	0.5 mg/m^3	1.5 mg/m^3	——	X
1-Chloro-2, 3-epoxypropane (Epichlorhydrin)	106-89-8	2 ppm	4 ppm	——	X

Table 3 "Permissible Exposure Limits for Air Contaminants"

Substance	CAS	TWA_8	STEL	Ceiling	Skin
2-Chloroethanol (Ethylene chlorohydrin)	107-07-3	——	——	1 ppm	X
Chloroethylene (vinyl chloride) (See WAC 296-62-07329)	75-01-4	1 ppm	5 ppm	——	——
Chloroform (Trichloromethane)	67-66-3	2 ppm	4 ppm	——	——
1-Chloro-1-nitropropane	600-25-9	2 ppm	4 ppm	——	——
bis-Chloromethyl ether (see WAC 296-62-073)	542-88-1	——	——	——	——
Chloromethyl methyl ether (Methyl chloromethyl ether) (see WAC 296-62-073)	107-30-2	——	——	——	——
Chloropentafluoroethane	76-15-3	1,000 ppm	1,250 ppm	——	——
Chloropicrin (Nitrotrichloromethane)	76-06-2	0.1 ppm	0.3 ppm	——	——
beta-Chloroprene (2-Chloro-1, 3-butadiene)	126-99-8	10 ppm	20 ppm	——	X
o-Chlorostyrene	2039-87-4	50 ppm	75 ppm	——	——
o-Chlorotoluene	95-49-8	50 ppm	75 ppm	——	——
2-Chloro-6-trichloromethyl pyridine (Nitrapyrin)	1929-82-4	——	——	——	——
Total particulate	——	10 mg/m^3	20 mg/m^3	——	——
Respirable fraction	——	5 mg/m^3	10 mg/m^3	——	——
Chlorpyrifos	2921-88-2	0.2 mg/m^3	0.6 mg/m^3	——	X
Chromic acid and chromates (as CrO3)	Varies with compound	0.1 mg/m^3	0.3 mg/m^3	——	——
Chromium, soluble, chromic and chromous salts (as Cr)	7440-47-3	0.5 mg/m^3	1.5 mg/m^3	——	——
Chromium (VI) compounds (as Cr)	——	0.05 mg/m^3	0.15 mg/m^3	——	——
Chromium metal and insoluble salts	7440-47-3	0.5 mg/m^3	1.5 mg/m^3	——	——
Chromyl chloride	14977-61-8	0.025 ppm	0.075 ppm	——	——
Chrysene (Coal tar pitch volatiles)	65996-93-2	0.2 mg/m^3	0.6 mg/m^3	——	——
Clopidol	2971-90-6	——	——	——	——
Total particulate	——	10 mg/m^3	20 mg/m^3	——	——
Respirable fraction	——	5 mg/m^3	10 mg/m^3	——	——
Coal dust (less than 5% SiO2)	——	——	——	——	——
Respirable fraction	——	2 mg/m^3	4 mg/m^3	——	——
Coal dust (greater than or equal to 5% SiO2)	——	——	——	——	——
Respirable fraction	——	0.1 mg/m^3	0.3 mg/m^3	——	——
Coal tar pitch volatiles (benzene soluble fraction) (Particulate polycyclic aromatic hydrocarbons)	65996-93-2	0.2 mg/m^3	0.6 mg/m^3	——	——
Cobalt, metal fume & dust (as Co)	7440-48-4	0.05 mg/m^3	0.15 mg/m^3	——	——
Cobalt carbonyl (as Co)	10210-68-1	0.1 mg/m^3	0.3 mg/m^3	——	——
Cobalt hydrocarbonyl (as Co)	16842-03-8	0.1 mg/m^3	0.3 mg/m^3	——	——
Coke oven emissions (see WAC 296-62-200)	——	0.15 mg/m^3	——	——	——
Copper (as Cu)	7440-50-8	——	——	——	——
Fume	——	0.1 mg/m^3	0.3 mg/m^3	——	——
Dusts and mists	——	1 mg/m^3	3 mg/m^3	——	——
Cotton dust (raw) (waste sorting, blending, cleaning, willowing and garetting) (see WAC 296-62-14533)	——	1 mg/m^3	——	——	——
Corundum (Aluminum oxide)	7429-90-5	——	——	——	——
Total particulate	——	10 mg/m^3	20 mg/m^3	——	——
Respirable fraction	——	5 mg/m^3	10 mg/m^3	——	——
Crag herbicide (Sesone, Sodium-2, 4-dichloro-phenoxyethyl sulfate)	136-78-7	——	——	——	——
Total particulate	——	10 mg/m^3	20 mg/m^3	——	——
Respirable fraction	——	5 mg/m^3	10 mg/m^3	——	——
Cresol (all isomers)	1319-77-3	5 ppm	10 ppm	——	X
Crotonaldehyde	123-73-9; 4170-30-3	2 ppm	4 ppm	——	——
Crufomate	299-86-5	5 mg/m^3	10 mg/m^3	——	——
Cumene	98-82-8	50 ppm	75 ppm	——	X

Table 3 "Permissible Exposure Limits for Air Contaminants"

Substance	CAS	TWA_8	STEL	Ceiling	Skin
Cyanamide	420-04-2	2 mg/m^3	4 mg/m^3	——	——
Cyanide (as CN)	Varies with compound	5 mg/m^3	10 mg/m^3	——	X
Cyanogen	460-19-5	10 ppm	20 ppm	——	——
Cyanogen chloride	506-77-4	——	——	0.3 ppm	——
Cyclohexane	110-82-7	300 ppm	375 ppm	——	——
Cyclohexanol	108-93-0	50 ppm	75 ppm	——	X
Cyclohexanone	108-94-1	25 ppm	38 ppm	——	X
Cyclohexene	110-83-8	300 ppm	375 ppm	——	——
Cyclohexylamine	108-91-8	10 ppm	20 ppm	——	——
Cyclonite (RDX)	121-82-4	1.5 mg/m^3	3.0 mg/m^3	——	X
Cyclopentadiene	542-92-7	75 ppm	113 ppm	——	——
Cyclopentane	287-92-3	600 ppm	750 ppm	——	——
Cyhexatin (Tricyclohexyltin hydroxide)	13121-70-5	5 mg/m^3	10 mg/m^3	——	——
2,4-D (Dichlorophenoxy-acetic acid)	94-75-7	10 mg/m^3	20 mg/m^3	——	——
DBCP (1,2-Dibromo-3-chloropropane) (See WAC 296-62-07342)	96-12-8	0.001 ppm	——	0.005 ppm	——
DDT (Dichlorodiphenyltri-chloroethane)	50-29-3	1 mg/m^3	3 mg/m^3	——	X
DDVP, (Dichlorvos)	62-73-7	0.1 ppm	0.3 ppm	——	X
Dasanit (Fensulfothion)	115-90-2	0.1 mg/m^3	0.3 mg/m^3	——	——
Decaborane	17702-41-9	0.05 ppm	0.15 ppm	——	X
Demeton	8065-48-3	0.01 ppm	0.03 ppm	——	X
Diacetone alcohol (4-hydroxy-4-methyl-2-pentanone)	123-42-2	50 ppm	75 ppm	——	——
1, 2-Diaminoethane (Ethylenediamine)	107-15-3	10 ppm	20 ppm	——	——
Diazinon	333-41-5	0.1 mg/m^3	0.3 mg/m^3	——	X
Diazomethane	334-88-3	0.2 ppm	0.6 ppm	——	——
Diborane	19287-45-7	0.1 ppm	0.3 ppm	——	——
Dibrom (see Naled)	300-76-5	3 mg/m^3	6 mg/m^3	——	X
1, 2-Dibromo-3-chloropropane (DBCP) (see WAC 296-62-07342)	96-12-8	0.001 ppm	——	0.005 ppm	——
2-N-Dibutylamino ethanol	102-81-8	2 ppm	4 ppm	——	X
Dibutyl phosphate	107-66-4	1 ppm	2 ppm	——	——
Dibutyl phthalate	84-74-2	5 mg/m^3	10 mg/m^3	——	——
Dichloroacetylene	7572-29-4	——	——-	0.1 ppm	——
o-Dichlorobenzene	95-50-1	——	——	50 ppm	——
p-Dichlorobenzene	106-46-7	75 ppm	110 ppm	——	——
3, 3'-Dichlorobenzidine (see WAC 296-62-073)	91-94-1	——	——	——	——
Dichlorodiphenyltri-chloroethane (DDT)	50-29-3	1 mg/m^3	3 mg/m^3	——	X
Dichlorodifluoromethane	75-71-8	1,000 ppm	1,250 ppm	——	——
1, 3-Dichloro-5, 5-dimethyl hydantoin	118-52-5	0.2 mg/m^3	0.4 mg/m^3	——	——
1, 1-Dichloroethane (Ethylidine chloride)	75-34-3	100 ppm	150 ppm	——	——
1, 2-Dichloroethane (Ethylene dichloride)	107-06-2	1 ppm	2 ppm	——	——
1, 1-Dichloroethylene (Vinylidene chloride)	75-35-4	1 ppm	3 ppm	——	——
1, 2-Dichloroethylene (Acetylene dichloride)	540-59-0	200 ppm	250 ppm	——	——
Dichloroethyl ether	111-44-4	5 ppm	10 ppm	——	X
Dichlorofluoromethane	75-43-4	10 ppm	20 ppm	——	——
Dichloromethane (Methylene chloride) (See WAC 296-62-07470)	75-09-2	25 ppm	125 ppm	——	——
1, 1-Dichloro-1-nitroethane	594-72-9	2 ppm	10 ppm	——	——
Dichlorophenoxyacetic acid (2, 4-D)	94-75-7	10 mg/m^3	20 mg/m^3	——	——
1, 2-Dichloropropane (Propylene dichloride)	78-87-5	75 ppm	110 ppm	——	——
Dichloropropene	542-75-6	1 ppm	3 ppm	——	X
2, 2-Dichloropropionic acid	75-99-0	1 ppm	3 ppm	——	——

Table 3 "Permissible Exposure Limits for Air Contaminants"

Substance	CAS	TWA_8	STEL	Ceiling	Skin
Dichlorotetrafluoroethane	76-14-2	1,000 ppm	1,250 ppm	——	——
Dichlorvos (DDVP)	62-73-7	0.1 ppm	0.3 ppm	——	X
Dicrotophos	141-66-2	0.25 mg/m^3	0.75 mg/m^3	——	X
Dicyclopentadiene	77-73-6	5 ppm	10 ppm	——	——
Dicyclopentadienyl iron	102-54-5	——	——	——	——
Total particulate	——	10 mg/m^3	20 mg/m^3	——	——
Respirable fraction	——	5 mg/m^3	10 mg/m^3	——	——
Dieldrin	60-57-1	0.25 mg/m^3	0.75 mg/m^3	——	X
Diethanolamine	111-42-2	3 ppm	6 ppm	——	——
Diethylamine	109-89-7	10 ppm	25 ppm	——	——
2-Diethylaminoethanol	100-37-8	10 ppm	20 ppm	——	X
Diethylene triamine	111-40-0	1 ppm	3 ppm	——	X
Diethyl ether (Ethyl ether)	60-29-7	400 ppm	500 ppm	——	——
Diethyl ketone	96-22-0	200 ppm	250 ppm	——	——
Diethyl phthalate	84-66-2	5 mg/m^3	10 mg/m^3	——	——
Difluorodibromomethane	75-61-6	100 ppm	150 ppm	——	——
Difolatan (Captafol)	2425-06-1	0.1 mg/m^3	0.3 mg/m^3	——	X
Diglycidyl ether (DGE)	2238-07-5	0.1 ppm	0.3 ppm	——	——
Dihydroxybenzene (Hydroquinone)	123-31-9	2 mg/m^3	4 mg/m^3	——	——
Diisobutyl ketone (2, 6-Dimethylheptanone)	108-83-8	25 ppm	38 ppm	——	——
Diisopropylamine	108-18-9	5 ppm	10 ppm	——	X
Dimethoxymethane (Methylal)	109-87-5	1,000 ppm	1,250 ppm	——	——
Dimethyl acetamide	127-19-5	10 ppm	20 ppm	——	X
Dimethylamine	124-40-3	10 ppm	20 ppm	——	——
4-Dimethylaminoazo benzene (see WAC 296-62-073)	60-11-7	——	——	——	——
Dimethylaminobenzene (Xylidene)	1300-73-8	2 ppm	4 ppm	——	X
Dimethylaniline (N, N-Dimethylaniline)	121-69-7	5 ppm	10 ppm	——	X
Dimethylbenzene (Xylene)	1300-73-8	100 ppm	150 ppm	——	——
Dimethyl-1, 2-dibromo-2, 2-dichloroethyl phosphate (Naled)	300-76-5	3 mg/m^3	6 mg/m^3	——	X
Dimethylformamide	68-12-2	10 ppm	20 ppm	——	X
2, 6-Dimethylheptanone (Diisobutyl ketone)	108-83-8	25 ppm	38 ppm	——	——
1, 1-Dimethylhydrazine	57-14-7	0.5 ppm	1.5 ppm	——	X
Dimethyl phthalate	131-11-3	5 mg/m^3	10 mg/m^3	——	——
Dimethyl sulfate	77-78-1	0.1 ppm	0.3 ppm	——	X
Dinitolmide (3, 5-Dinitro-o-toluamide)	148-01-6	5 mg/m^3	10 mg/m^3	——	——
Dinitrobenzene (all isomers - alpha, meta and para)	528-29-0; 99-65-0; 100-25-4	0.15 ppm	0.45 ppm	——	X
Dinitro-o-cresol	534-52-1	0.2 mg/m^3	0.6 mg/m^3	——	X
3, 5-Dinitro-o-toluamide (Dinitolmide)	148-01-6	5 mg/m^3	10 mg/m^3	——	——
Dinitrotoluene	25321-14-6	1.5 mg/m^3	3 mg/m^3	——	X
Dioxane (Diethylene dioxide)	123-91-1	25 ppm	38 ppm	——	X
Dioxathion	78-34-2	0.2 mg/m^3	0.6 mg/m^3	——	X
Diphenyl (Biphenyl)	92-52-4	0.2 ppm	0.6 ppm	——	——
Diphenylamine	122-39-4	10 mg/m^3	20 mg/m^3	——	——
Diphenylmethane diisocyanate (Methylene bisphenyl isocyanate (MDI))	101-68-8	——	——	0.02 ppm	——
Dipropylene glycol methyl ether	34590-94-8	100 ppm	150 ppm	——	X
Dipropyl ketone	123-19-3	50 ppm	75 ppm	——	——
Diquat	85-00-7	0.5 mg/m^3	1.5 mg/m^3	——	——
Di-sec, Octyl phthalate (Di-2-ethylhexylphthalate)	117-81-7	5 mg/m^3	10 mg/m^3	——	——
Disulfram	97-77-8	2 mg/m^3	4 mg/m^3	——	——
Disulfoton	298-04-4	0.1 mg/m^3	0.3 mg/m^3	——	X
2, 6-Di-tert-butyl-p-cresol	128-37-0	10 mg/m^3	20 mg/m^3	——	——
Diuron	330-54-1	10 mg/m^3	20 mg/m^3	——	——
Divinyl benzene	1321-74-0	10 ppm	20 ppm	——	——
Emery	12415-34-8	——	——	——	——
Total particulate	——	10 mg/m^3	20 mg/m^3	——	——
Respirable fraction	——	5 mg/m^3	10 mg/m^3	——	——
Endosulfan (Thiodan)	115-29-7	0.1 mg/m^3	0.3 mg/m^3	——	X

Table 3 "Permissible Exposure Limits for Air Contaminants"

Substance	CAS	TWA_8	STEL	Ceiling	Skin
Endrin	72-20-8	0.1 mg/m^3	0.3 mg/m^3	——	X
Epichlorhydrin (1-Chloro-2, 3-epoxypropane)	106-89-8	2 ppm	4 ppm	——	X
EPN	2104-64-5	0.5 mg/m^3	1.5 mg/m^3	——	X
1, 2-Epoxypropane (Propylene oxide)	75-56-9	20 ppm	30 ppm	——	——
2, 3-Epoxy-1-propanol (Glycidol)	556-52-5	25 ppm	38 ppm	——	——
Ethane	——	Simple asphyxiant	——	——	——
Ethanethiol (Ethyl mercaptan)	75-08-1	0.5 ppm	1.5 ppm	——	——
Ethanol (Ethyl alcohol)	64-17-5	1,000 ppm	1,250 ppm	——	——
Ethanolamine (2-Aminoethanol)	141-43-5	3 ppm	6 ppm	——	——
Ethion	563-12-2	0.4 mg/m^3	1.2 mg/m^3	——	X
2-Ethoxyethanol (Glycol monoethyl ether)	110-80-5	5 ppm	10 ppm	——	X
2-Ethoxyethyl acetate (Cellosolve acetate)	111-15-9	5 ppm	10 ppm	——	X
Ethyl acetate	141-78-6	400 ppm	500 ppm	——	——
Ethyl acrylate	140-88-5	5 ppm	25 ppm	——	X
Ethyl alcohol (ethanol)	64-17-5	1,000 ppm	1,250 ppm	——	——
Ethylamine	75-04-07	10 ppm	20 ppm	——	——
Ethyl amyl ketone (5-Methyl-3-hepatone)	541-85-5	25 ppm	38 ppm	——	——
Ethyl benzene	100-41-4	100 ppm	125 ppm	——	——
Ethyl bromide	74-96-4	200 ppm	250 ppm	——	——
Ethyl butyl ketone (3-Heptanone)	106-35-4	50 ppm	75 ppm	——	——
Ethyl chloride	75-00-3	1,000 ppm	1,250 ppm	——	——
Ethylene	74-85-1	Simple asphyxiant	——	——	——
Ethylene chlorohydrin (2-Chloroethanol)	107-07-3	——	——	1 ppm	X
Ethylenediamine (1,2-Diaminoethane)	107-15-3	10 ppm	20 ppm	——	X
Ethylene dibromide	106-93-4	0.1 ppm	0.5 ppm	——	——
Ethylene dichloride (1,2-Dichloroethane)	107-06-2	1 ppm	2 ppm	——	——
Ethylene glycol	107-21-1	——	——	50 ppm	——
Ethylene glycol dinitrate	628-96-6	——	0.1 mg/m^3	——	X
Ethylene glycol monomethyl ether acetate (Methyl cellosolve acetate)	——	5 ppm	10 ppm	——	X
Ethyleneimine (see WAC 296-62-073)	151-56-4	——	——	——	X
Ethylene oxide (see WAC 296-62-07359)	75-21-8	1 ppm	5 ppm	——	——
Ethyl ether (Diethyl ether)	60-29-7	400 ppm	500 ppm	——	——
Ethyl formate	109-94-4	100 ppm	125 ppm	——	——
Ethylidine chloride (1, 1-Dichloroethane)	107-06-2	1 ppm	2 ppm	——	——
Ethylidene norbornene	16219-75-3	——	——	5.0 ppm	——
Ethyl mercaptan (Ethanethiol)	75-08-1	0.5 ppm	1.5 ppm	——	——
n-Ethylmorpholine	100-74-3	5 ppm	10 ppm	——	X
Ethyl sec-amyl ketone (5-methyl-3-heptanone)	541-85-5	25 ppm	38 ppm	——	——
Ethyl silicate	78-10-4	10 ppm	20 ppm	——	——
Fenamiphos	22224-92-6	0.1 mg/m^3	0.3 mg/m^3	——	X
Fensulfothion (Dasanit)	115-90-2	0.1 mg/m^3	0.3 mg/m^3	——	——
Fenthion	55-38-9	0.2 mg/m^3	0.6 mg/m^3	——	X
Ferbam	——	——	——	——	——
Total particulate	14484-64-1	10 mg/m^3	20 mg/m^3	——	——
Ferrovanadium dust	12604-58-9	1 mg/m^3	3 mg/m^3	——	——
Fluorides (as F)	Varies with compound	2.5 mg/m^3	5 mg/m^3	——	——
Fluorine	7782-41-4	0.1 ppm	0.3 ppm	——	——
Fluorotrichloromethane (see Trichlorofluoro methane)	75-69-4	——	——	1,000 ppm	——
Fonofos	944-22-9	0.1 mg/m^3	0.3 mg/m^3	——	X
Formaldehyde (see WAC 296-62-07540)	50-00-0	0.75 ppm	2 ppm	——	——
Formamide	75-12-7	20 ppm	30 ppm	——	——
Formic acid	64-18-6	5 ppm	10 ppm	——	——

Table 3 "Permissible Exposure Limits for Air Contaminants"

Substance	CAS	TWA_8	STEL	Ceiling	Skin
Furadon (carbofuran)	1563-66-2	0.1 mg/m^3	0.3 mg/m^3	——	——
Furfural	98-01-1	2 ppm	4 ppm	——	X
Furfuryl alcohol	98-00-0	10 ppm	15 ppm	——	X
Gasoline	8006-61-9	300 ppm	500 ppm	——	——
Germanium tetrahydride	7782-65-2	0.2 ppm	0.6 ppm	——	——
Glass, fibrous or dust	——	10 mg/m^3	20 mg/m^3	——	——
Gluteraldehyde	111-30-8	——	——	0.2 ppm	——
Glycerin mist	56-81-5	——	——	——	——
Total particulate	——	10 mg/m^3	20 mg/m^3	——	——
Respirable fraction	——	5 mg/m^3	10 mg/m^3	——	——
Glycidol (2, 3-Epoxy-1-propanol)	556-52-5	25 ppm	38 ppm	——	——
Glycol monoethyl ether (2-Ethoxyethanol)	110-80-5	5 ppm	10 ppm	——	X
Grain dust (oat, wheat, barley)	——	10 mg/m^3	20 mg/m^3	——	——
Graphite, natural	7782-42-5	——	——	——	——
Respirable particulate	——	2.5 mg/m^3	5 mg/m^3	——	——
Graphite, synthetic	——	——	——	——	——
Total particulate	——	10 mg/m^3	20 mg/m^3	——	——
Respirable fraction	——	5 mg/m^3	10 mg/m^3	——	——
Guthion (Azinphosmethyl)	86-50-0	0.2 mg/m^3	0.6 mg/m^3	——	X
Gypsum	13397-24-5	——	——	——	——
Total particulate	——	10 mg/m^3	20 mg/m^3	——	——
Respirable fraction	——	5 mg/m^3	10 mg/m^3	——	——
Hafnium	7440-58-6	0.5 mg/m^3	1.5 mg/m^3	——	——
Helium	——	Simple asphyxiant	——	——	——
Heptachlor	76-44-8	0.5 mg/m^3	1.5 mg/m^3	——	X
Heptane (n-heptane)	142-82-5	400 ppm	500 ppm	——	——
2-Heptanone (Methyl n-amyl ketone)	110-43-0	50 ppm	75 ppm	——	——
3-Heptanone (Ethyl butyl ketone)	106-35-4	50 ppm	75 ppm	——	——
Hexachlorobutadiene	87-68-3	0.02 ppm	0.06 ppm	——	X
Hexachlorocyclopentadiene	77-47-4	0.01 ppm	0.03 ppm	——	——
Hexachloroethane	67-72-1	1 ppm	3 ppm	——	X
Hexachloronaphthalene	1335-87-1	0.2 mg/m^3	0.6 mg/m^3	——	X
Hexafluoroacetone	684-16-2	0.1 ppm	0.3 ppm	——	X
Hexane	——	——	——	——	——
n-hexane	110-54-3	50 ppm	75 ppm	——	——
other isomers	Varies with compound	500 ppm	1,000 ppm	——	——
2-Hexanone (Methyl-n-butyl ketone)	591-78-6	5 ppm	10 ppm	——	——
Hexone (Methyl isobutyl ketone)	108-10-1	50 ppm	75 ppm	——	——
sec-Hexyl acetate	108-84-9	50 ppm	75 ppm	——	——
Hexylene glycol	107-41-5	——	——	25 ppm	——
Hydrazine	302-01-2	0.1 ppm	0.3 ppm	——	X
Hydrogen	——	Simple asphyxiant	——	——	——
Hydrogenated terphenyls	61788-32-7	0.5 ppm	1.5 ppm	——	——
Hydrogen bromide	10035-10-6	——	——	3.0 ppm	——
Hydrogen chloride	7647-01-0	——	——	5.0 ppm	——
Hydrogen cyanide	74-90-8	——	4.7 ppm	——	X
Hydrogen fluoride	7664-39-3	——	——	3 ppm	——
Hydrogen peroxide	7722-84-1	1 ppm	3 ppm	——	——
Hydrogen selenide (as Se)	7783-07-5	0.05 ppm	0.15 ppm	——	——
Hydrogen sulfide	7783-06-4	10 ppm	15 ppm	——	——
Hydroquinone (Dihydroxybenzene)	123-31-9	2 mg/m^3	4 mg/m^3	——	——
4-Hydroxy-4-methyl-2-pentanone (Diacetone alcohol)	123-42-2	50 ppm	75 ppm	——	——
2-Hydroxypropyl acrylate	99-61-1	0.5 ppm	1.5 ppm	——	X
Indene	95-13-6	10 ppm	20 ppm	——	——
Indium and compounds (as In)	7440-74-6	0.1 mg/m^3	0.3 mg/m^3	——	——
Iodine	7553-56-2	——	——	0.1 ppm	——
Iodoform	75-47-8	0.6 ppm	1.8 ppm	——	——
Iron oxide dust and fume (as Fe)	1309-37-1	——	——	——	——
Total particulate	——	5 mg/m^3	10 mg/m^3	——	——
Iron pentacarbonyl (as Fe)	13463-40-6	0.1 ppm	0.2 ppm	——	——
Iron salts, soluble (as Fe)	Varies with compound	1 mg/m^3	3 mg/m^3	——	——

Table 3 "Permissible Exposure Limits for Air Contaminants"

Substance	CAS	TWA_8	STEL	Ceiling	Skin
Isoamyl acetate	123-92-2	100 ppm	150 ppm	——	——
Isoamyl alcohol (primary and secondary)	123-51-3	100 ppm	125 ppm	——	——
Isobutyl acetate	110-19-0	150 ppm	188 ppm	——	——
Isobutyl alcohol	78-83-1	50 ppm	75 ppm	——	——
Isooctyl alcohol	26952-21-6	50 ppm	75 ppm	——	X
Isophorone	78-59-1	4 ppm	——	5 ppm	——
Isophorone diisocyanate	4098-71-9	0.005 ppm	0.02 ppm	——	X
Isopropoxyethanol	109-59-1	25 ppm	38 ppm	——	——
Isopropyl acetate	108-21-4	250 ppm	310 ppm	——	——
Isopropyl alcohol	67-63-0	400 ppm	500 ppm	——	——
Isopropylamine	75-31-0	5 ppm	10 ppm	——	——
N-Isopropylaniline	768-52-5	2 ppm	4 ppm	——	X
Isopropyl ether	108-20-3	250 ppm	313 ppm	——	——
Isopropyl glycidyl ether (IGE)	4016-14-2	50 ppm	75 ppm	——-	——
Kaolin	——	——	——	——	——
Total particulate	——	10 mg/m^3	20 mg/m^3	——	——
Respirable fraction	——	5 mg/m^3	10 mg/m^3	——	——
Ketene	463-51-4	0.5 mg/m^3	1.5 mg/m^3	——	——
Lannate (Methomyl)	16752-77-5	2.5 mg/m^3	5 mg/m^3	——	——
Lead, inorganic (as Pb) (see WAC 296-62-07521 and 296-155-176)	7439-92-1	0.05 mg/m^3	——	——	——
Lead arsenate (as Pb) (see WAC 296-62-07347)	3687-31-8	0.05 mg/m^3	——	——	——
Lead chromate (as Pb)	7758-97-6	0.05 mg/m^3	——	——	——
Limestone	1317-65-3	——	——	——	——
Total particulate	——	10 mg/m^3	20 mg/m^3	——	——
Respirable fraction	——	5 mg/m^3	10 mg/m^3	——	——
Lindane	58-89-9	0.5 mg/m^3	1.5 mg/m^3	——	X
Lithium hydride	7580-67-8	0.025 mg/m^3	0.075 mg/m^3	——	——
L.P.G. (liquified petroleum gas)	68476-85-7	1,000 ppm	1,250 ppm	——	——
Magnesite	546-93-0	——	——	——	——
Total particulate	——	10 mg/m^3	20 mg/m^3	——	——
Respirable fraction	——	5 mg/m^3	10 mg/m^3	——	——
Magnesium oxide fume	1309-48-4	——	——	——	——
Total particulate	——	10 mg/m^3	20 mg/m^3	——	——
Malathion	121-75-5	——	——	——	——
Total particulate	——	10 mg/m^3	20 mg/m^3	——	X
Maleic anhydride	108-31-6	0.25 ppm	0.75 ppm	——	——
Manganese and compounds (as Mn)	7439-96-5	——	——	5 mg/m^3	——
Manganese cyclopentadienyl tricarbonyl (as Mn)	12079-65-1	0.1 mg/m^3	0.3 mg/m^3	——	X
Manganese tetroxide and fume (as Mn)	7439-96-5	1 mg/m^3	3 mg/m^3	——	——
Marble	1317-65-3	——	——	——	——
Total particulate	——	10 mg/m^3	20 mg/m^3	——	——
Respirable fraction	——	5 mg/m^3	10 mg/m^3	——	——
MBOCA (4, 4'-Methylene bis (2-chloro-aniline)) (see WAC 296-62-073)	101-14-4	——	——	——	X
MDA (4, 4-Methylene dianiline) (see WAC 296-62-076)	101-77-9	0.01 ppm	0.1 ppm	——	X
MDI (Methylene bisphenyl isocyanate) (Diphenylmethane diisocyanate)	101-68-8	——	——	0.02 ppm	——
MEK (Methyl ethyl ketone) (2-Butanone)	78-93-3	200 ppm	300 ppm	——	——
MEKP (Methyl ethyl ketone peroxide)	1338-23-4	——	——	0.2 ppm	——
Mercury (as Hg)	7439-97-6	——	——	——	——
Aryl and inorganic	——	0.1 mg/m^3	0.3 mg/m^3	——	X
Organo-alkyl compounds	——	0.01 mg/m^3	0.03 mg/m^3	——	X
Vapor	——	0.05 mg/m^3	0.15 mg/m^3	——	X
Mesityl oxide	141-79-7	15 ppm	25 ppm	——	——

Table 3 "Permissible Exposure Limits for Air Contaminants"

Substance	CAS	TWA_8	STEL	Ceiling	Skin
Methacrylic acid	79-41-4	20 ppm	30 ppm	——	X
Methane	——	Simple asphyxiant	——	——	——
Methanethiol (Methyl mercaptan)	74-93-1	0.5 ppm	1.5 ppm	——	——
Methanol (Methyl alcohol)	67-56-1	200 ppm	250 ppm	——	X
Methomyl (lannate)	16752-77-5	2.5 mg/m^3	5 mg/m^3	——	——
Methoxychlor	72-43-5	——	——	——	——
Total particulate	——	10 mg/m^3	20 mg/m^3	——	——
2-Methoxyethanol (Methyl cellosolve)	109-86-4	5 ppm	10 ppm	——	X
2-Methoxyethyl acetate (Methyl cellosolve acetate)	110-49-6	5 ppm	10 ppm	——	X
4-Methoxyphenol	150-76-5	5 mg/m^3	10 mg/m^3	——	——
Methyl acetate	79-20-9	200 ppm	250 ppm	——	——
Methyl acetylene (propyne)	74-99-7	1,000 ppm	1,250 ppm	——	——
Methyl acetylene-propadiene mixture (MAPP)	——	1,000 ppm	1,250 ppm	——	——
Methyl acrylate	96-33-3	10 ppm	20 ppm	——	X
Methylacrylonitrile	126-98-7	1 ppm	3 ppm	——	X
Methylal (Dimethoxy-methane)	109-87-5	1,000 ppm	1,250 ppm	——	——
Methyl alcohol (methanol)	67-56-1	200 ppm	250 ppm	——	X
Methylamine	74-89-5	10 ppm	20 ppm	——	——
Methyl amyl alcohol (Methyl isobutyl carbinol)	108-11-2	25 ppm	40 ppm	——	X
Methyl n-amyl ketone (2-Heptanone)	110-43-0	50 ppm	75 ppm	——	——
N-Methyl aniline (Monomethyl aniline)	100-61-8	0.5 ppm	1.5 ppm	——	X
Methyl bromide	74-83-9	5 ppm	10 ppm	——	X
Methyl-n-butyl ketone (2-Hexanone)	591-78-6	5 ppm	10 ppm	——	——
Methyl cellosolve (2-Methoxyethanol)	109-86-4	5 ppm	10 ppm	——	X
Methyl cellosolve acetate (2-Methoxyethyl acetate)	110-49-6	5 ppm	10 ppm	——	X
Methyl chloride	74-87-3	50 ppm	100 ppm	——	——
Methyl chloroform (1, 1, 1-trichlorethane)	71-55-6	350 ppm	450 ppm	——	——
Methyl chloromethyl ether (chloromethyl methyl ether) (see WAC 296-62-073)	107-30-2	——	——	——	——
Methyl 2-cyanoacrylate	137-05-3	2 ppm	4 ppm	——	——
Methylcyclohexane	108-87-2	400 ppm	500 ppm	——	——
Methylcyclohexanol	25639-42-3	50 ppm	75 ppm	——	——
Methylcyclohexanone	583-60-8	50 ppm	75 ppm	——	X
Methylcyclopentadienyl manganese tricarbonyl (as Mn)	12108-13-3	0.2 mg/m^3	0.6 mg/m^3	——	X
Methyl demeton	8022-00-2	0.5 mg/m^3	1.5 mg/m^3	——	X
Methylene bisphenyl isocyanate (MDI) (Diphenylmethane diisocyanate)	101-68-8	——	——	0.02 ppm	——
4, 4'-Methylene bis (2-chloro-aniline) (MBOCA) (see WAC 296-62-073)	101-14-4	——	——	——	X
Methylene bis (4-cyclohexylisocyanate)	5124-30-1	——	——	0.01 ppm	——
Methylene chloride (Dichloromethane) (see WAC 296-62-07470)	75-09-2	25 ppm	125 ppm	——	——
4, 4-Methylene dianiline (MDA) (see WAC 296-62-076)	101-77-9	0.01 ppm	0.1 ppm	——	X
Methyl ethyl ketone (MEK) (2-Butanone)	78-93-3	200 ppm	300 ppm	——	——
Methyl ethyl ketone peroxide (MEKP)	1338-23-4	——	——	0.2 ppm	——
Methyl formate	107-31-3	100 ppm	150 ppm	——	——
5-Methyl-3-heptanone (Ethyl amyl ketone)	541-85-5	25 ppm	38 ppm	——	——
Methyl hydrazine (Monomethyl hydrazine)	60-34-4	——	——	0.2 ppm	X

Table 3 "Permissible Exposure Limits for Air Contaminants"

Substance	CAS	TWA_8	STEL	Ceiling	Skin
Methyl iodide	74-88-4	2 ppm	4 ppm	——	X
Methyl isoamyl ketone	110-12-3	50 ppm	75 ppm	——	——
Methyl isobutyl carbinol (Methyl amyl alcohol)	108-11-2	25 ppm	40 ppm	——	X
Methyl isobutyl ketone (Hexone)	108-10-1	50 ppm	75 ppm	——	——
Methyl isocyanate	624-83-9	0.02 ppm	0.06 ppm	——	X
Methyl isopropyl ketone	563-80-4	200 ppm	250 ppm	——	——
Methyl mercaptan (Methanethiol)	74-93-1	0.5 ppm	1.5 ppm	——	——
Methyl methacrylate	80-62-6	100 ppm	150 ppm	——	——
Methyl parathion	298-00-0	0.2 mg/m^3	0.6 mg/m^3	——	X
Methyl propyl ketone (2-Pentanone)	107-87-9	200 ppm	250 ppm	——	——
Methyl silicate	684-84-5	1 ppm	3 ppm	——	——
alpha-Methyl styrene	98-83-9	50 ppm	100 ppm	——	——
Mevinphos (Phosdrin)	7786-34-7	0.01 ppm	0.03 ppm	——	X
Metribuzin	21087-64-9	5 mg/m^3	10 mg/m^3	——	——
Mica (Silicates)					
Respirable fraction	12001-26-2	3 mg/m^3	6 mg/m^3	——	——
Molybdenum (as Mo)	7439-98-7	——	——	——	——
Soluble compounds	——	5 mg/m^3	10 mg/m^3	——	——
Insoluble compounds	——	10 mg/m^3	20 mg/m^3	——	——
Monochlorobenzene (Chlorobenzene)	108-90-7	75 ppm	113 ppm	——	——
Monocrotophos (Azodrin)	6923-22-4	0.25 mg/m^3	0.75 mg/m^3	——	——
Monomethyl aniline (N-Methyl aniline)	100-61-8	0.5 ppm	1.5 ppm	——	X
Monomethyl hydrazine	——	——	——	0.2 ppm	——
Morpholine	110-91-8	20 ppm	30 ppm	——	X
Naled (Dibrom)	300-76-5	3 mg/m^3	6 mg/m^3	——	X
Naphtha	8030-30-6	100 ppm	150 ppm	——	X
Naphthalene	91-20-3	10 ppm	15 ppm	——	——
alpha-Naphthylamine (see WAC 296-62-073)	134-32-7	——	——	——	——
beta-Naphthylamine (see WAC 296-62-073)	91-59-8	——	——	——	——
Neon	7440-01-9	Simple asphyxiant	——	——	——
Nickel carbonyl (as Ni)	13463-39-3	0.001 ppm	0.003 ppm	——	——
Nickel (as Ni)	7440-02-0	——	——	——	——
Metal and insoluble compounds	——	1 mg/m^3	3 mg/m^3	——	——
Soluble compounds	——	0.1 mg/m^3	0.3 mg/m^3	——	——
Nicotine	54-11-5	0.5 mg/m^3	1.5 mg/m^3	——	X
Nitrapyrin (2-Chloro-6 trichloromethyl pyridine)	1929-82-4	——	——	——	——
Total particulate	——	10 mg/m^3	20 mg/m^3	——	——
Respirable fraction	——	5 mg/m^3	10 mg/m^3	——	——
Nitric acid	7697-37-2	2 ppm	4 ppm	——	——
Nitric oxide	10102-43-9	25 ppm	38 ppm	——	——
p-Nitroaniline	100-01-6	3 mg/m^3	6 mg/m^3	——	X
Nitrobenzene	98-95-3	1 ppm	3 ppm	——	X
4-Nitrobiphenyl (see WAC 296-62-073)	92-93-3	——	——	——	——
p-Nitrochlorobenzene	100-00-5	0.5 mg/m^3	1.5 mg/m^3	——	X
4-Nitrodiphenyl (see WAC 296-62-073)	——	——	——	——	——
Nitroethane	79-24-3	100 ppm	150 ppm	——	——
Nitrogen	7727-37-9	Simple asphyxiant	——	——	——
Nitrogen dioxide	10102-44-0	——	1 ppm	——	——
Nitrogen oxide (Nitrous oxide)	10024-97-2	50 ppm	75 ppm	——	——
Nitrogen trifluoride	7783-54-2	10 ppm	20 ppm	——	——
Nitroglycerin	55-63-0	——	0.1 mg/m^3	——	X
Nitromethane	75-52-5	100 ppm	150 ppm	——	——
1-Nitropropane	108-03-2	25 ppm	38 ppm	——	——
2-Nitropropane	79-46-9	10 ppm	20 ppm	——	——
N-Nitrosodimethylamine (see WAC 296-62-073)	62-75-9	——	——	——	——
Nitrotoluene	——	——	——	——	——
o-isomer	88-72-2	2 ppm	4 ppm	——	X
m-isomer	98-08-2	2 ppm	4 ppm	——	X
p-isomer	99-99-0	2 ppm	4 ppm	——	X

Table 3 "Permissible Exposure Limits for Air Contaminants"

Substance	CAS	TWA_8	STEL	Ceiling	Skin
Nitrotrichloromethane (Chloropicrin)	76-06-2	0.1 ppm	0.3 ppm	——	——
Nitrous oxide (Nitrogen oxide)	10024-97-2	50 ppm	75 ppm	——	——
Nonane	111-84-2	200 ppm	250 ppm	——	——
Octachloronaphthalene	2234-13-1	0.1 mg/m^3	0.3 mg/m^3	——	X
Octane	111-65-9	300 ppm	375 ppm	——	——
Oil mist mineral (particulate)	8012-95-1	5 mg/m^3	10 mg/m^3	——	——
Osmium tetroxide (as Os)	20816-12-0	0.0002 ppm	0.0006 ppm	——	——
Oxalic acid	144-62-7	1 mg/m^3	2 mg/m^3	——	——
Oxygen difluoride	7783-41-7	——	——	0.05 ppm	——
Ozone	10028-15-6	0.1 ppm	0.3 ppm	——	——
Paper fiber					
(Cellulose)	9004-34-6	——	——	——	——
Total particulate	——	10 mg/m^3	20 mg/m^3	——	——
Respirable fraction	——	5 mg/m^3	10 mg/m^3	——	——
Paraffin wax fume	8002-74-2	2 mg/m^3	4 mg/m^3	——	——
Paraquat	——	——	——	——	——
Respirable fraction	4685-14-7 1910-42-5 2074-50-2	0.1 mg/m^3	0.3 mg/m^3	——	X
Parathion	56-38-2	0.1 mg/m^3	0.3 mg/m^3	——	X
Particulate polycyclic aromatic hydrocarbons (benzene soluble fraction) (coal tar pitch volatiles)	65996-93-2	0.2 mg/m^3	0.6 mg/m^3	——	——
Particulates not otherwise regulated	——	——	——	——	——
Total particulate	——	10 mg/m^3	20 mg/m^3	——	——
Respirable fraction	——	5 mg/m^3	10 mg/m^3	——	——
Pentaborane	19624-22-7	0.005 ppm	0.015 ppm	——	——
Pentachloronaphthalene	1321-64-8	0.5 mg/m^3	1.5 mg/m^3	——	X
Pentachlorophenol	87-86-5	0.5 mg/m^3	1.5 mg/m^3	——	X
Pentaerythritol	115-77-5	——	——	——	——
Total particulate	——	10 mg/m^3	20 mg/m^3	——	——
Respirable fraction	——	5 mg/m^3	10 mg/m^3	——	——
Pentane	109-66-0	600 ppm	750 ppm	——	——
2-Pentanone (methyl propyl ketone)	107-87-9	200 ppm	250 ppm	——	——
Perchloroethylene (tetrachloroethylene)	127-18-4	25 ppm	38 ppm	——	——
Perchloromethyl mercaptan	594-42-3	0.1 ppm	0.3 ppm	——	——
Perchloryl fluoride	7616-94-6	3 ppm	6 ppm	——	——
Perlite	——	——	——	——	——
Total particulate	——	10 mg/m^3	20 mg/m^3	——	——
Respirable fraction	——	5 mg/m^3	10 mg/m^3	——	——
Petroleum distillates (Naptha, rubber solvent)	——	100 ppm	150 ppm	——	——
Phenacyl chloride (a-Chloroacetophenone)	532-21-4	0.05 ppm	0.15 ppm	——	——
Phenol	108-95-2	5 ppm	10 ppm	——	X
Phenothiazine	92-84-2	5 mg/m^3	10 mg/m^3	——	X
p-Phenylene diamine	106-50-3	0.1 mg/m^3	0.3 mg/m^3	——	X
Phenyl ether (vapor)	101-84-8	1 ppm	3 ppm	——	——
Phenyl ether-diphenyl mixture (vapor)	——	1 ppm	3 ppm	——	——
Phenylethylene (Styrene)	100-42-5	50 ppm	100 ppm	——	——
Phenyl glycidyl ether (PGE)	122-60-1	1 ppm	3 ppm	——	——
Phenylhydrazine	100-63-0	5 ppm	10 ppm	——	X
Phenyl mercaptan	108-98-5	0.5 ppm	1.5 ppm	——	——
Phenylphosphine	638-21-1	——	——	0.05 ppm	——
Phorate	298-02-2	0.05 mg/m^3	0.2 mg/m^3	——	X
Phosdrin (Mevinphos)	7786-34-7	0.01 ppm	0.03 ppm	——	X
Phosgene (carbonyl chloride)	75-44-5	0.1 ppm	0.3 ppm	——	——
Phosphine	7803-51-2	0.3 ppm	1 ppm	——	——
Phosphoric acid	7664-38-2	1 mg/m^3	3 mg/m^3	——	——
Phosphorus (yellow)	7723-14-0	0.1 mg/m^3	0.3 mg/m^3	——	——
Phosphorous oxychloride	10025-87-3	0.1 ppm	0.3 ppm	——	——
Phosphorus pentachloride	10026-13-8	0.1 ppm	0.3 ppm	——	——
Phosphorus pentasulfide	1314-80-3	1 mg/m^3	3 mg/m^3	——	——
Phosphorus trichloride	12-2-19	0.2 ppm	0.5 ppm	——	——
Phthalic anhydride	85-44-9	1 ppm	3 ppm	——	——

Table 3 "Permissible Exposure Limits for Air Contaminants"

Substance	CAS	TWA_8	STEL	Ceiling	Skin
m-Phthalodinitrile	626-17-5	5 mg/m^3	10 mg/m^3	——	——
Picloram	1918-02-1	——	——	——	——
Total particulate	——	10 mg/m^3	20 mg/m^3	——	——
Respirable fraction	——	5 mg/m^3	10 mg/m^3	——	——
Picric acid (2, 4, 6-Trinitrophenol)	88-89-1	0.1 mg/m^3	0.3 mg/m^3	——	X
Pindone (2-Pivalyl-1, 3-indandione, Pival)	83-26-1	0.1 mg/m^3	0.3 mg/m^3	——	——
Piperazine dihydrochloride	142-64-3	5 mg/m^3	10 mg/m^3	——	——
Pival (Pindone)	83-26-1	0.1 mg/m^3	0.3 mg/m^3	——	——
Plaster of Paris	26499-65-0	——	——	——	——
Total particulate	——	10 mg/m^3	20 mg/m^3	——	——
Respirable fraction	——	5 mg/m^3	10 mg/m^3	——	——
Platinum (as Pt)	7440-06-4	——	——	——	——
Metal	——	1 mg/m^3	3 mg/m^3	——	——
Soluble salts	——	0.002 mg/m^3	0.006 mg/m^3	——	——
Polychlorobiphenyls (Chlorodiphenyls)	——	——	——	——	——
42% Chlorine (PCB)	53469-21-9	1 mg/m^3	3 mg/m^3	——	X
54% Chlorine (PCB)	11097-69-1	0.5 mg/m^3	1.5 mg/m^3	——	X
Portland cement	65997-15-1	——	——	——	——
Total particulate	——	10 mg/m^3	20 mg/m^3	——	——
Respirable fraction	——	5 mg/m^3	10 mg/m^3	——	——
Potassium hydroxide	1310-58-3	——	——	2 mg/m^3	——
Propane	74-98-6	1,000 ppm	1,250 ppm	——	——
Propargyl alcohol	107-19-7	1 ppm	3 ppm	——	X
beta-Propiolactone (see WAC 296-62-073)	57-57-8	——	——	——	——
Propionic acid	79-09-4	10 ppm	20 ppm	——	——
Propoxur (Baygon)	114-26-1	0.5 mg/m^3	1.5 mg/m^3	——	——
n-Propyl acetate	109-60-4	200 ppm	250 ppm	——	——
n-Propyl alcohol	71-23-8	200 ppm	250 ppm	——	X
n-Propyl nitrate	627-13-4	25 ppm	40 ppm	——	——
Propylene	——	Simple asphyxiant	——	——	——
Propylene dichloride (1, 2-Dichloropropane)	78-87-5	75 ppm	110 ppm	——	——
Propylene glycol dinitrate	6423-43-4	0.05 ppm	0.15 ppm	——	X
Propylene glycol monomethyl ether	107-98-2	100 ppm	150 ppm	——	——
Propylene imine	75-55-8	2 ppm	4 ppm	——	X
Propylene oxide (1,2-Epoxypropane)	75-56-9	20 ppm	30 ppm	——	——
Propyne (Methyl acetylene)	74-99-7	1,000 ppm	1,250 ppm	——	——
Pyrethrum	8003-34-7	5 mg/m^3	10 mg/m^3	——	——
Pyridine	110-86-1	5 ppm	10 ppm	——	——
Pyrocatachol (Catechol)	120-80-9	5 ppm	10 ppm	——	X
Quinone (p-Benzoquinone)	106-51-4	0.1 ppm	0.3 ppm	——	——
RDX (Cyclonite)	——	1.5 mg/m^3	3 mg/m^3	——	X
Resorcinol	108-46-3	10 ppm	20 ppm	——	——
Rhodium (as Rh)	7440-16-6	——	——	——	——
Insoluble compounds, metal fumes and dusts	——	0.1 mg/m^3	0.3 mg/m^3	——	——
Soluble compounds, salts	——	0.001 mg/m^3	0.003 mg/m^3	——	——
Ronnel	299-84-3	10 mg/m^3	20 mg/m^3	——	——
Rosin core solder, pyrolysis products (as formaldehyde)	8050-09-7	0.1 mg/m^3	0.3 mg/m^3	——	——
Rotenone	83-79-4	5 mg/m^3	10 mg/m^3	——	——
Rouge	——	——	——	——	——
Total particulate	——	10 mg/m^3	20 mg/m^3	——	——
Respirable fraction	——	5 mg/m^3	10 mg/m^3	——	——
Rubber solvent (naphtha)	8030-30-6	100 ppm	150 ppm	——	——
Selenium compounds (as Se)	7782-49-2	0.2 mg/m^3	0.6 mg/m^3	——	——
Selenium hexafluoride (as Se)	7783-79-1	0.05 ppm	0.15 ppm	——	——
Sesone (Crag herbicide)	136-78-7	——	——	——	——
Total particulate	——	10 mg/m^3	20 mg/m^3	——	——
Respirable fraction	——	5 mg/m^3	10 mg/m^3	——	——
Sevin (Carbaryl)	63-25-2	5 mg/m^3	10 mg/m^3	——	——
Silane (see Silicon tetrahydride)	7803-62-5	5 ppm	10 ppm	——	——

Table 3 "Permissible Exposure Limits for Air Contaminants"

Substance	CAS	TWA_8	STEL	Ceiling	Skin
Silica, amorphous, precipitated and gel	112926-00-8	6 mg/m^3	12 mg/m^3	——	——
Silica, amorphous, diatomaceous earth, containing less than 1% crystalline silica	61790-53-2	——	——	——	——
Total particulate	——	6 mg/m^3	12 mg/m^3	——	——
Respirable fraction	——	3 mg/m^3	6 mg/m^3	——	——
Silica, crystalline cristobalite	——	——	——	——	——
Respirable fraction	14464-46-1	0.05 mg/m^3	0.15 mg/m3	——	——
Silica, crystalline quartz	——	——	——	——	——
Respirable fraction	14808-60-7	0.1 mg/m^3	0.3 mg/m^3	——	——
Silica, crystalline tripoli (as quartz)	——	——	——	——	——
Respirable fraction	1317-95-9	0.1 mg/m^3	0.3 mg/m^3	——	——
Silica, crystalline tridymite	——	——	——	——	——
Respirable fraction	15468-32-3	0.05 mg/m^3	0.15 mg/m^3	——	——
Silica, fused	——	——	——	——	——
Respirable fraction	60676-86-0	0.1 mg/m^3	0.3 mg/m^3	——	——
Silicates (less than 1% crystalline silica)	——	——	——	——	——
Mica	——	——	——	——	——
Respirable fraction	12001-26-2	3 mg/m^3	6 mg/m^3	——	——
Soapstone	——	——	——	——	——
Total particulate	——	6 mg/m^3	12 mg/m^3	——	——
Respirable fraction	——	3 mg/m^3	6 mg/m^3	——	——
Talc (containing asbestos) (see WAC 296-62-07705)	——	——	——	——	——
Talc (containing no asbestos)	——	——	——	——	——
Respirable fraction	14807-96-6	2 mg/m^3	4 mg/m^3	——	——
Tremolite (see WAC 296-62-07705)	——	——	——	——	——
Silicon	7440-21-3	——	——	——	——
Total particulate	——	10 mg/m^3	20 mg/m^3	——	——
Respirable fraction	——	5 mg/m^3	10 mg/m^3	——	——
Silicon carbide	409-21-2	——	——	——	——
Total particulate	——	10 mg/m^3	20 mg/m^3	——	——
Respirable fraction	——	5 mg/m^3	10 mg/m^3	——	——
Silicon tetrahydride (Silane)	7803-62-5	5 ppm	10 ppm	——	——
Silver, metal dust and soluble compounds (as Ag)	7440-22-4	0.01 mg/m^3	0.03 mg/m^3	——	——
Soapstone	——	——	——	——	——
Total particulate	——	6 mg/m^3	12 mg/m^3	——	——
Respirable fraction	——	3 mg/m^3	6 mg/m^3	——	——
Sodium azide (as HN3 or NaN3)	26628-22-8	——	——	0.1 ppm	X
Sodium bisulfite	7631-90-5	5 mg/m^3	10 mg/m^3	——	——
Sodium-2, 4-dichloro-phenoxyethyl sulfate (Crag herbicide)	136-78-7	——	——	——	——
Total particulate	——	10 mg/m^3	20 mg/m^3	——	——
Respirable fraction	——	5 mg/m^3	10 mg/m^3	——	——
Sodium fluoroacetate	62-74-8	0.05 mg/m^3	0.15 mg/m^3	——	X
Sodium hydroxide	1310-73-2	——	——	2 mg/m^3	——
Sodium metabisulfite	7681-57-4	5 mg/m^3	10 mg/m^3	——	——
Starch	9005-25-8	——	——	——	——
Total particulate	——	10 mg/m^3	20 mg/m^3	——	——
Respirable fraction	——	5 mg/m^3	10 mg/m^3	——	——
Stibine	7803-52-3	0.1 ppm	0.3 ppm	——	——
Stoddard solvent	8052-41-3	100 ppm	150 ppm	——	——
Strychnine	57-24-9	0.15 mg/m^3	0.45 mg/m^3	——	——
Styrene (Phenylethylene, Vinyl benzene)	100-42-5	50 ppm	100 ppm	——	——
Subtilisins	9014-01-1	——	0.00006 mg/m^3 (60 min.)	——	——
Sucrose	57-50-1	——	——	——	——
Total particulate	——	10 mg/m^3	20 mg/m^3	——	——
Respirable fraction	——	5 mg/m^3	10 mg/m^3	——	——
Sulfotep (TEDP)	3689-24-5	0.2 mg/m^3	0.6 mg/m^3	——	X

Table 3 "Permissible Exposure Limits for Air Contaminants"

Substance	CAS	TWA_8	STEL	Ceiling	Skin
Sulfur dioxide	7446-09-5	2 ppm	5 ppm	——	——
Sulfur hexafluoride	2551-62-4	1,000 ppm	1,250 ppm	——	——
Sulfuric acid	7664-93-9	1 mg/m^3	3 mg/m^3	——	——
Sulfur monochloride	10025-67-9	——	——	1 ppm	——
Sulfur pentafluoride	5714-22-1	——	——	0.01 ppm	——
Sulfur tetrafluoride	7783-60-0	——	——	0.1 ppm	——
Sulfuryl fluoride	2699-79-8	5 ppm	10 ppm	——	——
Sulprofos	35400-43-2	1 mg/m^3	3 mg/m^3	——	——
Systox (Demeton)	8065-48-3	0.01 ppm	0.03 ppm	——	X
2, 4, 5-T	93-76-5	10 mg/m^3	20 mg/m^3	——	——
Talc (containing asbestos) (see WAC 296-62-07705)	——	——	——	——	——
Talc (containing no asbestos)	——	——	——	——	——
Respirable fraction	14807-96-6	2 mg/m^3	4 mg/m^3	——	——
Tantalum	——	——	——	——	——
Metal and oxide dusts	7440-25-7	5 mg/m^3	10 mg/m^3	——	——
TDI (Toluene-2, 4-diisocyanate)	584-84-9	0.005 ppm	0.02 ppm	——	——
TEDP (Sulfotep)	3689-24-5	0.2 mg/m^3	0.6 mg/m^3	——	X
Tellurium and compounds (as Te)	13494-80-9	0.1 mg/m^3	0.3 mg/m^3	——	——
Tellurium hexafluoride (as Te)	7783-80-4	0.02 ppm	0.06 ppm	——	——
Temephos (Abate)	3383-96-8	——	——	——	——
Total particulate	——	10 mg/m^3	20 mg/m^3	——	——
Respirable fraction	——	5 mg/m^3	10 mg/m^3	——	——
TEPP	107-49-3	0.004 ppm	0.012 ppm	——	X
Terphenyls	26140-60-3	——	——	0.5 ppm	——
1, 1, 1, 2-Tetrachloro-2, 2-difluoroethane	76-11-0	500 ppm	625 ppm	——	——
1, 1, 2, 2-Tetrachloro-1, 2-difluoroethane	76-12-0	500 ppm	625 ppm	——	——
1, 1, 2, 2-Tetrachloroethane	79-34-5	1 ppm	3 ppm	——	X
Tetrachloroethylene (Perchloroethylene)	127-18-4	25 ppm	38 ppm	——	——
Tetrachloromethane (Carbon tetrachloride)	56-23-5	2 ppm	4 ppm	——	X
Tetrachloronaphthalene	1335-88-2	2 mg/m^3	4 mg/m^3	——	X
Tetraethyl lead (as Pb)	78-00-2	0.075 mg/m^3	0.225 mg/m^3	——	X
Tetrahydrofuran	109-99-9	200 ppm	250 ppm	——	——
Tetramethyl lead (as Pb)	75-74-1	0.075 mg/m^3	0.225 mg/m^3	——	X
Tetramethyl succinonitrile	3333-52-6	0.5 ppm	1.5 ppm	——	X
Tetranitromethane	509-14-8	1 ppm	3 ppm	——	——
Tetrasodium pyrophosphate	7722-88-5	5 mg/m^3	10 mg/m^3	——	——
Tetryl (2, 4, 6-trinitrophenyl-methylnitramine)	479-45-8	1.5 mg/m^3	3 mg/m^3	——	X
Thallium (soluble compounds) (as Tl)	7440-28-0	0.1 mg/m^3	0.3 mg/m^3	——	X
4, 4-Thiobis (6-tert-butyl-m-cresol)	96-69-5	——	——	——	——
Total particulate	——	10 mg/m^3	20 mg/m^3	——	——
Respirable fraction	——	5 mg/m^3	10 mg/m^3	——	——
Thiodan (Endosulfan)	115-29-7	0.1 mg/m^3	0.3 mg/m^3	——	X
Thioglycolic acid	68-11-1	1 ppm	3 ppm	——-	X
Thionyl chloride	7719-09-7	——	——	1 ppm	——
Thiram (see WAC 296-62-07519)	137-26-8	5 mg/m^3	10 mg/m^3	——	——
Tin (as Sn)	——	——	——	——	——
Inorganic compounds	7440-31-5	2 mg/m^3	4 mg/m^3	——	——
Tin (as Sn)	——	——	——	——	——
Organic compounds	7440-31-5	0.1 mg/m^3	0.3 mg/m^3	——	X
Tin oxide (as Sn)	21651-19-4	2 mg/m^3	4 mg/m^3	——	——
Titanium dioxide	13463-67-7	——	——	——	——
Total particulate	——	10 mg/m^3	20 mg/m^3	——	——
TNT (2, 4, 6-Trinitrotoluene)	118-96-7	0.5 mg/m^3	1.5 mg/m^3	——	X
Toluene	108-88-3	100 ppm	150 ppm	——	——
Toluene-2, 4-diisocyanate (TDI)	584-84-9	0.005 ppm	0.02 ppm	——-	——
m-Toluidine	108-44-1	2 ppm	4 ppm	——	X
o-Toluidine	95-53-4	2 ppm	4 ppm	——	X
p-Toluidine	106-49-0	2.0 ppm	4 ppm	——	X
Toxaphene (Chlorinated camphene)	8001-35-2	0.5 mg/m^3	1 mg/m^3	——	X

Table 3 "Permissible Exposure Limits for Air Contaminants"

Substance	CAS	TWA_8	STEL	Ceiling	Skin
Tremolite (see WAC 296-62-07705)	——	——	——	——	——
Tributyl phosphate	126-73-8	0.2 ppm	0.6 ppm	——	——
Trichloroacetic acid	76-03-9	1 ppm	3 ppm	——	——
1, 2, 4-Trichlorobenzene	120-82-1	——	——	5 ppm	——
1, 1, 1-Trichloroethane (Methyl chloroform)	71-55-6	350 ppm	450 ppm	——	——
1, 1, 2-Trichloroethane	79-00-5	10 ppm	20 ppm	——	——
Trichloroethylene	79-01-6	50 ppm	200 ppm	——	——
Trichlorofluoromethane (Fluorotrichloromethane)	75-69-4	——	——	1,000 ppm	——
Trichloromethane (Chloroform)	67-66-3	2 ppm	4 ppm	——	——
Trichloronaphthalene	1321-65-9	5 mg/m^3	10 mg/m^3	——	X
1, 2, 3-Trichloropropane	96-18-4	10 ppm	20 ppm	——	X
1, 1, 2-Trichloro-1, 2, 2-trifluoroethane	76-13-1	1,000 ppm	1,250 ppm	——	——
Tricyclohexyltin hydroxide (Cyhexatin)	13121-70-5	5 mg/m^3	10 mg/m^3	——	——
Triethylamine	121-44-8	10 ppm	15 ppm	——	——
Trifluorobromomethane	75-63-8	1,000 ppm	1,250 ppm	——	——
Trimellitic anhydride	552-30-7	0.005 ppm	0.015 ppm	——	——
Trimethylamine	75-50-3	10 ppm	15 ppm	——	——
Trimethyl benzene	25551-13-7	25 ppm	38 ppm	——	——
Trimethyl phosphite	121-45-9	2 ppm	4 ppm	——	——
2, 4, 6-Trinitrophenol (Picric acid)	88-89-1	0.1 mg/m^3	0.3 mg/m^3	——	X
2, 4, 6-Trinitrophenyl-methylnitramine (Tetryl)	479-45-8	1.5 mg/m^3	3 mg/m^3	——-	X
2, 4, 6-Trinitrotoluene (TNT)	118-96-7	0.5 mg/m^3	1.5 mg/m^3	——	X
Triorthocresyl phosphate	78-30-8	0.1 mg/m^3	0.3 mg/m^3	——	X
Triphenyl amine	603-34-9	5 mg/m^3	10 mg/m^3	——	——
Triphenyl phosphate	115-86-6	3 mg/m^3	6 mg/m^3	——	——
Tungsten (as W)	7440-33-7	——	——	——	——
Soluble compounds	——	1 mg/m^3	3 mg/m^3	——	——
Insoluble compounds	——	5 mg/m^3	10 mg/m^3	——	——
Turpentine	8006-64-2	100 ppm	150 ppm	——	——
Uranium (as U)	7440-61-1	——	——	——	——
Soluble compounds	——	0.05 mg/m^3	0.15 mg/m^3	——	——
Insoluble compounds	——	0.2 mg/m^3	0.6 mg/m^3	——	——
n-Valeraldehyde	110-62-3	50 ppm	75 ppm	——	——
Vanadium (as V2O5)	——	——	——	——	——
Respirable fraction	1314-62-1	0.05 mg/m^3	0.15 mg/m^3	——	——
Vegetable oil mist	——	——	——	——	——
Total particulate	——	10 mg/m^3	20 mg/m^3	——	——
Respirable fraction	——	5 mg/m^3	10 mg/m^3	——	——
Vinyl acetate	108-05-1	10 ppm	20 ppm	——	——
Vinyl benzene (Styrene)	100-42-5	50 ppm	100 ppm	——	——
Vinyl bromide	593-60-2	5 ppm	10 ppm	——	——
Vinyl chloride (Chloroethylene) (see WAC 296-62-07329)	75-01-4	1 ppm	5 ppm	——	——
Vinyl cyanide (Acrylonitrile) (see WAC 296-62-07336)	107-13-1	2 ppm	10 ppm	——	——
Vinyl cyclohexene dioxide	106-87-6	10 ppm	20 ppm	——	X
Vinyl toluene	25013-15-4	50 ppm	75 ppm	——	——
Vinylidene chloride (1, 1-Dichloroethylene)	75-35-4	1 ppm	3 ppm	——	——
VM & P Naphtha	8032-32-4	300 ppm	400 ppm	——	——
Warfarin	81-81-2	0.1 mg/m^3	0.3 mg/m^3	——	——
Welding fumes (total particulate)	——	5 mg/m^3	10 mg/m^3	——	——
Wood dust	——	——	——	——	——
Nonallergenic; (All woods except allergenics)	——	5 mg/m^3	10 mg/m^3	——	——
Allergenics (e.g. cedar, mahogany and teak)	——	2.5 mg/m^3	5 mg/m^3	——	——
Xylenes (ortho, meta, and para isomers) (Dimethylbenzene)	1330-20-7	100 ppm	150 ppm	——	——
m-Xylene alpha, alpha-diamine	1477-55-0	——	——	0.1 mg/m^3	X

Table 3 "Permissible Exposure Limits for Air Contaminants"

Substance	CAS	TWA_8	STEL	Ceiling	Skin
Xylidine (Dimethylaminobenzene)	1300-73-8	2 ppm	4 ppm	——	X
Yttrium	7440-65-5	1 mg/m^3	3 mg/m^3	——	——
Zinc chloride fume	7646-85-7	1 mg/m^3	2 mg/m^3	——	——
Zinc chromate (as CrO3)	Varies with compound	0.05 mg/m^3	——	0.1 mg/m^3	——
Zinc oxide	1314-13-2	——	——	——	——
Total particulate	——	10 mg/m^3	20 mg/m^3	——	——
Respirable fraction	——	5 mg/m^3	10 mg/m	——	——
Zinc oxide fume	1314-13-2	5 mg/g^3	10 mg/m^3	——	——
Zinc stearate	557-05-1	——	——	——	——
Total particulate	——	10 mg/m^3	20 mg/m^3	——	——
Respirable fraction	——	5 mg/m^3	10 mg/m^3	——	——
Zirconium compounds (as Zr)	7440-67-2	5 mg/m^3	10 mg/m^3	——	——

[Statutory Authority: RCW 49.17.010, 49.17.040, 49.17.050, 49.17.060. 05-01-166, § 296-307-62625, filed 12/21/04, effective 4/2/05.]

WAC 296-307-628 Definitions.

Ceiling - An exposure limit, measured over the shortest time period feasible, that must not be exceeded during any part of the employee's workday.

Dust - Solid particles suspended in air. Dusts are generated by handling, drilling, crushing, grinding, rapid impact, detonation, or decrepitation of organic or inorganic materials such as rock, ore, metal, coal, wood, grain, etc.

Exposed or exposure - The contact an employee has with a toxic substance, harmful physical agent or oxygen deficient condition. Exposure can occur through various routes of entry, such as inhalation, ingestion, skin contact, or skin absorption.

Fume - Solid particles suspended in air, generated by condensation from the gaseous state, generally after volatilization from molten metals, etc.

Gas - A normally formless fluid which can be changed to the liquid or solid state by the effect of increased pressure or decreased temperature or both.

Mist - Liquid droplets suspended in air, generated by condensation from the gaseous to the liquid state or by breaking up a liquid into a dispersed state, such as by splashing, foaming, spraying or atomizing.

Oxygen deficient - An atmosphere with an oxygen content below 19.5% by volume.

Permissible exposure limits (PEL) - Permissible exposure limits (PELs) are employee exposures to toxic substances or harmful agents that must not be exceeded. PELs are specified in applicable WISHA rules.

Short-term exposure limit (STEL) - An exposure limit averaged over a short time period (usually measured for 15 minutes) that must not be exceeded during any part of an employee's workday.

Time weighted average (TWA_8) - An exposure limit averaged over 8 hours that must not be exceeded during an employee's workday.

Toxic substance - Any chemical substance or biological agent, such as bacteria, virus, and fungus, which is any of the following:

• Listed in the latest edition of the National Institute for Occupational Safety and Health (NIOSH) Registry of Toxic Effects of Chemical Substances (RTECS)

• Shows positive evidence of an acute or chronic health hazard in testing conducted by, or known to, the employer.

The subject of a material safety data sheet kept by or known to the employer showing the material may pose a hazard to human health.

Vapor - The gaseous form of a substance that is normally in the solid or liquid state.

[Statutory Authority: RCW 49.17.010, 49.17.040, 49.17.050, 49.17.060. 05-01-166, § 296-307-628, filed 12/21/04, effective 4/2/05.]

Part Y-7
Hearing Loss Prevention (Noise)

WAC 296-307-630 Scope. The purpose of this part is to:

• Prevent employee hearing loss by minimizing employee noise exposures

AND

• Make sure employees exposed to noise are protected.

These goals are accomplished by:

• Measuring and computing the employee noise exposure from all equipment and machinery in the workplace, as well as any other noise sources in the work area

• Protecting employees from noise exposure by using feasible noise controls

• Making sure employees use hearing protection, if you cannot feasibly control the noise

• Training employees about hearing loss prevention

• Evaluating your hearing loss prevention efforts by tracking employee hearing or periodically reviewing controls and protection

• Making appropriate corrections to your program.

Reference: Table 1 will help you determine the hearing loss prevention requirements for your workplace. For the specific requirements associated with Noise Evaluation Criteria, see WAC 296-307-63410 of this part.

Table 1
Noise Evaluation Criteria

Criteria	Description	Requirements
85 dBA TWA_8	Full-day employee noise exposure dose. If you have one or more employees whose exposure equals or exceeds this level, you must have a hearing loss prevention program	– Hearing protection – Training – Audiometric testing
90 dBA TWA_8	Full-day employee noise exposure dose. If you have one or more employees whose exposure equals or exceeds this level, you must reduce employee noise exposures in the workplace	– Noise controls **AND** – Hearing protection – Training – Audiometric testing
115 dBA measured using slow response	Extreme noise level (greater than one second in duration)	– Hearing protection – Signs posted in work areas warning of exposure
140 dBC measured using fast response	Extreme impulse or impact noise (less than one second in duration)	Hearing protection

[Statutory Authority: RCW 49.17.010, 49.17.040, 49.17.050, 49.17.060. 05-01-166, § 296-307-630, filed 12/21/04, effective 4/2/05.]

Hearing Loss Prevention Program

WAC 296-307-632 Summary.

Your responsibility:

To prevent employee hearing loss by minimizing, and providing protection from, noise exposures.

You must:

Conduct employee noise exposure monitoring

WAC 296-307-63205

Control employee noise exposures that equal or exceed 90 dBA TWA_8

WAC 296-307-63210

Make sure employees use hearing protection when their noise exposure equals or exceed 85 dBA TWA_8

WAC 296-307-63215

Make sure exposed employees receive training about noise and hearing protection

WAC 296-307-63220

Make sure warning signs are posted for areas with noise levels that equal or exceed 115 dBA

WAC 296-307-63225

Arrange for oversight of audiometric testing

WAC 296-307-63230

Identify and correct deficiencies in your hearing loss prevention program

WAC 296-307-63235

Document your hearing loss prevention activities

WAC 296-307-63240.

[Statutory Authority: RCW 49.17.010, 49.17.040, 49.17.050, 49.17.060. 05-01-166, § 296-307-632, filed 12/21/04, effective 4/2/05.]

WAC 296-307-63205 Conduct employee noise exposure monitoring.

You must:

• Conduct employee noise exposure monitoring to determine the employee's actual exposure when reasonable information indicates that any employee's exposure may equal or exceed 85 dBA TWA_8.

Note:
- Representative monitoring may be used where several employees perform the same tasks in substantially similar conditions
- Examples of information or situations that can indicate exposures which equal or exceed 85 dBA TWA_8, include:
  - Noise in the workplace that interferes with people speaking, even at close range
  - Information from the manufacturer of equipment you use in the workplace that indicates high noise levels for machines in use
  - Reports from employees of ringing in their ears or temporary hearing loss
  - Warning signals or alarms that are difficult to hear
  - Work near abrasive blasting or jack hammering operations
  - Use of tools and equipment such as the following:
    - Heavy equipment or machinery
    - Fuel-powered hand tools
    - Compressed air-driven tools or equipment in frequent use
    - Power saws, grinders or chippers
    - Powder-actuated tools.

You must:

• Follow applicable guidance in WAC 296-307-634 when conducting noise exposure monitoring

• Make sure your sampling for noise exposure monitoring identifies:

– All employees whose exposure equals or exceeds the following:

■ 85 dBA TWA_8 (noise dosimetry, providing an average exposure over an eight-hour time period)

■ 115 dBA (slow response sound level meter, identifying short-term noise exposures)

■ 140 dBC (fast response sound level meter, identifying almost instantaneous noise exposures).

– Exposure levels for selection of hearing protection.

• Provide exposed employees and their representatives with an opportunity to observe any measurements of employee noise exposure that are conducted

• Notify each employee whose exposure equals or exceeds 85 dBA TWA_8 of the monitoring results within five working days of when you receive the results

• Conduct additional noise monitoring whenever a change in production, process, equipment or controls, may reasonably be expected to result in:

– Additional employees whose exposure equals or exceeds 85 dBA TWA_8

– Employees exposed to higher level of noise requiring more effective hearing protection.

Note: Conditions that may be expected to increase exposure include:
- Adding machinery to the work area
- Increasing production rates
- Removal or deterioration of noise control devices

• Increased use of noisy equipment
• Change in work schedule
• Change of job duties.

[Statutory Authority: RCW 49.17.010, 49.17.040, 49.17.050, 49.17.060. 05-01-166, § 296-307-63205, filed 12/21/04, effective 4/2/05.]

WAC 296-307-63210 Control employee noise exposures that equal or exceed 90 dBA TWA_8.

IMPORTANT:

Hearing protection provides a barrier to noise and protects employees but is not considered a control of the noise hazard. Separate requirements apply to hearing protection and are found in WAC 296-307-63215.

You must:

• Reduce employee noise exposure, using feasible controls, wherever exposure equals or exceeds 90 dBA TWA_8.

Note:
• Once noise exposures are brought below 90 dBA TWA_8, no further reduction is required. However, further reduction of noise may reduce the need for other hearing loss prevention requirements
• Controls that eliminate noise at the source or establish a permanent barrier to noise are typically more reliable. For example:
– Replacing noisy equipment with quiet equipment
– Using silencers and mufflers
– Installing enclosures
– Damping noisy equipment and parts.
• Other controls and work practices may also be useful for reducing noise exposures. Examples include:
– Employee rotation
– Limiting use of noisy equipment
– Rescheduling work.

[Statutory Authority: RCW 49.17.010, 49.17.040, 49.17.050, 49.17.060. 05-01-166, § 296-307-63210, filed 12/21/04, effective 4/2/05.]

WAC 296-307-63215 Make sure employees use hearing protection when their noise exposure equals or exceeds 85 dBA TWA_8.

You must:

• Make sure employees wear hearing protectors that will provide sufficient protection when exposure equals or exceeds:

– 85 dBA TWA_8 (noise dosimetry, providing an average exposure over an eight-hour time period)

– 115 dBA (slow response sound level meter, identifying short-term noise exposures)

– 140 dBC (fast response sound level meter, identifying almost instantaneous noise exposures).

• Provide employees with an appropriate selection of hearing protectors:

– The selection must include at least two distinct types (such as molded earplugs, foam earplugs, custom-molded earplugs, earcaps, or earmuffs) for each exposed employee and must be sufficient to cover:

■ Different levels of hearing protection needed in order to reduce all employee exposures to a level below 85 dBA TWA_8

■ Different sizes

■ Different working conditions.

– Consider requests of the employees regarding:

■ Physical comfort

■ Environmental conditions

■ Medical needs

■ Communication requirements.

Note: Hearing protector selection should include earplugs, earcaps and earmuffs.

You must:

• Provide hearing protection at no cost to employees

• Supervise employees to make sure that hearing protection is used correctly

• Make sure hearing protectors are:

– Properly chosen for fit

– Replaced as necessary.

• Make sure all hearing protection is sufficient to reduce the employee's equivalent eight-hour noise exposure to 85 dBA or less. When using the A-weighted exposure measurements, reported as "dBA TWA_8," the reduction in noise exposure by hearing protectors is given by Table 2:

Table 2
Effective Protection of Hearing Protectors

Type of hearing protection	Effective protection
Single hearing protection (earplugs, earcaps or earmuffs)	7 dB less than the manufacturer assigned noise reduction rating (NRR); for example, earplugs with an NRR of 20 dB are considered to reduce employee exposures of 95 dBA TWA_8 to 82 dBA TWA_8
Dual hearing protection (earplug and earmuff worn together)	2 dB less than the higher NRR of the two protectors; for example, earplugs with an NRR of 20 dB and earmuffs with an NRR of 12 dB are considered to reduce employee exposures of 100 dBA TWA_8 to 82 dBA TWA_8

• In addition to protection based on daily noise dose, make sure hearing protection has an NRR of at least 20 dB when exposures involve noise that equals or exceeds 115 dBA (slow response sound level meter) or 140 dBC (fast response sound level meter).

Note: You may also evaluate hearing protection by using the other methods given in the NIOSH *Compendium of Hearing Protection* (DHHS (NIOSH)) Publication No. 95-105 or online at http://www.cdc.gov/niosh/topics/noise/hpcomp.html. These methods require additional monitoring and are more complex, but provide a more thorough evaluation of protection. This may be useful in cases where communication is critical or for evaluating hearing protection for employees with hearing impairment.

[Statutory Authority: RCW 49.17.010, 49.17.040, 49.17.050, 49.17.060. 05-01-166, § 296-307-63215, filed 12/21/04, effective 4/2/05.]

WAC 296-307-63220 Make sure exposed employees receive training about noise and hearing protection.

You must:

• Train all employees whose noise exposure equals or exceeds 85 dBA TWA_8

• Provide training when an employee is first assigned to a position involving noise exposure that equals or exceeds 85 dBA TWA_8 **and** at least annually after that

• Update information provided in the training program to be consistent with changes in controls, hearing protectors and work processes

• Make sure your noise and hearing protection training includes:

– The effects of noise on hearing (including both occupational and nonoccupational exposures)

– Noise controls used in your workplace

– The purpose of hearing protectors: The advantages, disadvantages, and attenuation of various types

– Instructions about selecting, fitting, using, and caring for hearing protection

– The purpose and procedures for program evaluation including audiometric testing and hearing protection auditing when you choose to rely upon auditing (see WAC 296-307-638)

– The employees' right to access records kept by the employer.

• Maintain a written program describing initial and refresher training.

[Statutory Authority: RCW 49.17.010, 49.17.040, 49.17.050, 49.17.060. 05-01-166, § 296-307-63220, filed 12/21/04, effective 4/2/05.]

WAC 296-307-63225 Make sure warning signs are posted for areas where noise levels equal or exceed 115 dBA.

You must:

• Make sure warning signs are posted at the entrances or boundaries of all well-defined work areas where employees may be exposed to noise that equals or exceeds 115 dBA (measured using a sound level meter with slow response).

– Warning signs must clearly indicate that the area is a high noise area and that hearing protectors are required.

[Statutory Authority: RCW 49.17.010, 49.17.040, 49.17.050, 49.17.060. 05-01-166, § 296-307-63225, filed 12/21/04, effective 4/2/05.]

WAC 296-307-63230 Arrange for oversight of audiometric testing.

You must:

• Make sure audiometric testing as described by WAC 296-307-636 is supervised and reviewed by one of the following licensed or certified individuals:

– An audiologist

– An otolaryngologist

– Another qualified physician.

• Make sure audiograms are conducted by one of the above individuals or by a technician certified by the Council of Accreditation in Occupational Hearing Conservation (CAOHC) and responsible to a qualified reviewer.

[Statutory Authority: RCW 49.17.010, 49.17.040, 49.17.050, 49.17.060. 05-01-166, § 296-307-63230, filed 12/21/04, effective 4/2/05.]

WAC 296-307-63235 Identify and correct deficiencies in your hearing loss prevention program.

You must:

• Use audiometric testing to identify hearing loss, which may indicate program deficiencies

• Take appropriate actions when deficiencies are found with your program.

– A deficiency may be indicated when:

■ Any employee experiences measurable hearing loss indicated by a standard threshold shift

OR

■ Any employee isn't wearing appropriate hearing protection during an audit when auditing is used in place of baseline audiograms for short term employees (see WAC 296-307-638, Option to audiometric testing).

Note: A standard threshold shift or audit deficiency does not necessarily indicate that a significant hearing loss has occurred. These criteria are intended to help identify where there may be flaws in your hearing loss prevention program that can be fixed before permanent hearing loss occurs.

There are additional statistical tools and tests that may be used to improve the effectiveness of your program. Staff conducting audiometric testing and auditing may be able to suggest additional ways to improve your hearing loss prevention program and tailor it to your worksite.

You must:

• Evaluate the following, at a minimum, when responding to a standard threshold shift:

– Employee noise exposure measurements

– Noise controls in the work area

– The selection of hearing protection available and refit employees as necessary

– Employee training on noise and the use of hearing protection and conduct additional training as necessary.

Reference: You may use the option of auditing hearing protection (see WAC 296-307-638) for employees hired or transferred to jobs with noise exposure for less than one year. You may also use audiograms provided by a third-party hearing loss prevention program in some circumstances. Details of these program options are found in WAC 296-307-638, Options to audiometric testing.

[Statutory Authority: RCW 49.17.010, 49.17.040, 49.17.050, 49.17.060. 05-01-166, § 296-307-63235, filed 12/21/04, effective 4/2/05.]

WAC 296-307-63240 Document your hearing loss prevention activities.

You must:

• Create and retain records documenting noise exposures. Include, at a minimum:

– Exposure measurements required by this part for at least two years and for as long as you rely upon them to determine employee exposure

– Audiometric test records for the duration of employment for the affected employees

– Hearing protection audits, if you choose to rely upon them, for the duration of employment of the affected employees.

Note:

- You need to keep as complete a record as possible. Records developed under previous rules or in other jurisdictions need to be kept, even when they do not fulfill the full requirements of this part. Similarly, records found to have errors in collection or processing need to be kept if they provide an indication of employee exposure or medical condition not found in other records
- You may want to consider your other business needs, such as worker's compensation claims management, before discarding these records.

[Statutory Authority: RCW 49.17.010, 49.17.040, 49.17.050, 49.17.060. 05-01-166, § 296-307-63240, filed 12/21/04, effective 4/2/05.]

Noise Measurement and Computation

WAC 296-307-634 Summary.

Your responsibility:

Conduct noise monitoring or measurement to evaluate employee exposures in your workplace.

You must:

Make sure that noise-measuring equipment meets recognized standards

WAC 296-307-63405

Measure employee noise exposure

WAC 296-307-63410

Use these equations when estimating full-day noise exposure from sound level measurements

WAC 296-307-63415.

[Statutory Authority: RCW 49.17.010, 49.17.040, 49.17.050, 49.17.060. 05-01-166, § 296-307-634, filed 12/21/04, effective 4/2/05.]

WAC 296-307-63405 Make sure that noise-measuring equipment meets recognized standards.

You must:

• Make sure that noise dosimetry equipment meets these specifications:

– Dosimeters must be equipment class 2AS-90/80-5 of the American National Rule Specification for Personal Noise Dosimeters, ANSI S1.25-1991, such dosimeters are normally marked "Type 2."

Note: Make sure any dosimeter you use is Type 2 equipment that:
- Uses slow integration and A-weighting of sound levels.
- Has the **criterion level** set to 90 dB, so the dosimeter will report a constant 8-hour exposure at 90 dBA as a 100% dose.
- Has the **threshold level** set at 80 dB, so the dosimeter will register all noise above 80 dB.
- Uses a 5 dB **exchange rate** for averaging of noise levels over the sample period.

You must:

• Make sure that sound level meters meet these specifications:

– American National Standard Specification for Sound Level Meters, S1.4-1984, Type 2 requirements for sound level meters, such sound level meters are normally marked "Type 2."

■ For continuous noise measurements, the meter must be capable of measuring A-weighted sound levels with slow response

■ For impulse or impact noise measurements, the meter must be capable of indicating maximum C-weighted sound level measurements with fast response.

• Calibrate dosimeters and sound level meters used to monitor employee noise exposure:

– Before and after each day's use

AND

– Following the instrument manufacturer's calibration instructions.

Note:
- You may conduct dosimetry using an exchange rate less than 5 dB and compare the results directly to the noise evaluation criteria in Table 1
- For measuring impulse and impact noise you may also use a sound level meter set to measure maximum impulse C-weighted sound levels or peak C-weighted sound levels.

[Statutory Authority: RCW 49.17.010, 49.17.040, 49.17.050, 49.17.060. 05-01-166, § 296-307-63405, filed 12/21/04, effective 4/2/05.]

WAC 296-307-63410 Measure employee noise exposure.

IMPORTANT:

A noise dosimeter is the basis for determining total daily noise exposure for employees. However, where you have constant noise levels, you may estimate employee noise exposure using measurements from a sound level meter. Calculation of the employee noise exposure must be consistent with WAC 296-307-63415.

You must:

• Include all:

– Workplace noise from equipment and machinery in use

– Other noise from sources necessary to perform the work

– Noise outside the control of the exposed employees.

• Use a noise dosimeter when necessary to measure employee noise dose

• Use a sound level meter to evaluate continuous and impulse noise levels

• Identify all employees whose exposures equal or exceed the Noise Evaluation Criteria as follows:

Noise Evaluation Criteria

Criteria	Description	Requirements
85 dBA TWA_8	Full-day employee noise exposure dose. If you have one or more employees whose exposure equals or exceeds this level, you must have a hearing loss prevention program	– Hearing protection – Training – Audiometric testing
90 dBA TWA_8	Full-day employee noise exposure dose. If you have one or more employees whose exposure equals or exceeds this level, you must reduce employee noise exposures in the workplace	Noise controls (in addition to the requirements for 85 dBA TWA_8)
115 dBA measured using slow response	Extreme noise level (greater than one second in duration)	– Hearing protection – Signs posted in work areas warning of exposure
140 dBC measured using fast response	Extreme impulse or impact noise (less than one second in duration)	Hearing protection

[Statutory Authority: RCW 49.17.010, 49.17.040, 49.17.050, 49.17.060. 05-01-166, § 296-307-63410, filed 12/21/04, effective 4/2/05.]

WAC 296-307-63415 Use these equations when estimating full-day noise exposure from sound level measurements.

You must:

• Compute employee's full-day noise exposure by using the appropriate equations from Table 3 "Noise Dose Computation" **when** using a sound level meter to estimate noise dose.

Table 3
Noise Dose Computation

Description	Equation
Compute the noise dose based on several time periods of constant noise during the shift	The total noise dose over the work day, as a percentage, is given by the following equation where C_n indicates the total time of exposure at a specific noise level, and T_n indicates the reference duration for that level. $D = 100*((C_1/T_1) + (C_2/T_2) + (C_3/T_3) + ... + (C_n/T_n))$
The reference duration is equal to the time of exposure to continuous noise at a specific sound level that will result in a one hundred percent dose	The reference duration, T, for sound level, L, is given in hours by the equation: $T = 8/(2^{((L - 90)/5)})$
Given a noise dose as a percentage, compute the equivalent eight-hour time weighted average noise level	The equivalent eight-hour time weighted average, TWA_8, is computed from the dose, D, by the equation: $TWA_8 = 16.61* Log_{10}(D/100) + 90$

[Statutory Authority: RCW 49.17.010, 49.17.040, 49.17.050, 49.17.060. 05-01-166, § 296-307-63415, filed 12/21/04, effective 4/2/05.]

Audiometric Testing

WAC 296-307-636 Summary.

Your responsibility:

To conduct audiometric testing of employees exposed to noise to make sure that their hearing protection is effective.

You must:

Provide audiometric testing at no cost to employees

WAC 296-307-63605

Establish a baseline audiogram for each exposed employee

WAC 296-307-63610

Conduct annual audiograms

WAC 296-307-63615

Review audiograms that indicate a standard threshold shift

WAC 296-307-63620

Keep the baseline audiogram without revision, unless annual audiograms indicate a persistent threshold shift or a significant improvement in hearing

WAC 296-307-63625

Make sure a record is kept of audiometric tests

WAC 296-307-63630

Make sure audiometric testing equipment meets these requirements

WAC 296-307-63635.

[Statutory Authority: RCW 49.17.010, 49.17.040, 49.17.050, 49.17.060. 05-01-166, § 296-307-636, filed 12/21/04, effective 4/2/05.]

WAC 296-307-63605 Provide audiometric testing at no cost to employees.

You must:

• Provide audiograms, including any required travel or necessary additional examinations or testing, at no cost to exposed employees.

[Statutory Authority: RCW 49.17.010, 49.17.040, 49.17.050, 49.17.060. 05-01-166, § 296-307-63605, filed 12/21/04, effective 4/2/05.]

WAC 296-307-63610 Establish a baseline audiogram for each exposed employee.

You must:

• Conduct a baseline audiogram when an employee is first assigned to work involving noise exposures that equal or exceed 85 dBA TWA_8.

– Make sure this audiogram is completed no more than one hundred eighty days after the employee is first assigned

OR

– Make sure employee is covered by a hearing protection audit program (as described by WAC 296-307-638 and available as an alternative only for employees hired for less than one year).

Note: Employers who utilize mobile test units are allowed up to one year to obtain a valid baseline audiogram for each exposed employee. The employees must still be given training and hearing protection as required by this part.

You must:

• Make sure employees are not exposed to workplace noise at least fourteen hours before testing to establish a baseline audiogram.

– Hearing protectors may be used to accomplish this.

• Notify employees of the need to avoid high levels of nonoccupational noise exposure (such as loud music, headphones, guns, power tools, motorcycles, etc.) during the fourteen-hour period immediately preceding the baseline audiometric examination.

[Statutory Authority: RCW 49.17.010, 49.17.040, 49.17.050, 49.17.060. 05-01-166, § 296-307-63610, filed 12/21/04, effective 4/2/05.]

WAC 296-307-63615 Conduct annual audiograms.

You must:

• Conduct annual audiograms for employees as long as they continue to be exposed to noise that equals or exceeds 85 dBA TWA_8.

Note: Annual audiometric testing may be conducted at any time during the work shift. By conducting the annual audiogram during the work shift with the employee exposed to typical noise for their job, the test may record a temporary threshold shift. This makes the test more sensitive to potential hearing loss and may help you improve employee protection before a permanent threshold shift occurs. A suspected temporary shift is one reason an employer may choose to retest employee hearing.

You must:

• Make sure each employee is informed of the results of his or her audiometric test.

– Include whether or not there has been a hearing level decrease or improvement since their previous test.

• Make sure each employee's annual audiogram is compared to his or her baseline audiogram by an audiologist, otolaryngologist, another qualified physician, or the technician conducting the test to determine if a standard threshold shift has occurred.

– If the annual audiogram indicates that an employee has suffered a standard threshold shift, you may obtain a retest within thirty days and consider the results of the retest as the annual audiogram.

• Make sure that an audiologist, otolaryngologist, or other qualified physician sees any annual audiogram that indicates a standard threshold shift.

[Statutory Authority: RCW 49.17.010, 49.17.040, 49.17.050, 49.17.060. 05-01-166, § 296-307-63615, filed 12/21/04, effective 4/2/05.]

WAC 296-307-63620 Review audiograms that indicate a standard threshold shift.

You must:

• Make sure the healthcare professional supervising audiograms has:

– A copy of this part

– The baseline audiogram and most recent audiogram of the employee to be evaluated

– Background noise level records for the testing room

– Calibration records for the audiometer.

• Obtain an opinion from the healthcare professional supervising audiograms as to whether the audiograms indicate possible occupational hearing loss and any recommendations for changes in hearing protection.

• Pay for any clinical audiological evaluation or otological examination required by the reviewer, if:

– Additional review is necessary to evaluate the cause of hearing loss

OR

– If there is indication of a medical condition of the ear caused or aggravated by the wearing of hearing protectors.

• Inform the employee in writing of the existence of a standard threshold shift within twenty-one calendar days of the determination.

• Make arrangements for the reviewer to communicate to the employee any suspected medical conditions that are found unrelated to your workplace. This information is confidential and must be handled appropriately.

[Statutory Authority: RCW 49.17.010, 49.17.040, 49.17.050, 49.17.060. 05-01-166, § 296-307-63620, filed 12/21/04, effective 4/2/05.]

WAC 296-307-63625 Keep the baseline audiogram without revision, unless annual audiograms indicate a persistent threshold shift or a significant improvement in hearing.

You must:

• Keep the baseline audiogram without revision, unless a qualified reviewer determines:

– The standard threshold shift revealed by the audiogram is persistent

OR

– The hearing threshold shown in the annual audiogram indicates significant improvement over the baseline audiogram.

[Statutory Authority: RCW 49.17.010, 49.17.040, 49.17.050, 49.17.060. 05-01-166, § 296-307-63625, filed 12/21/04, effective 4/2/05.]

WAC 296-307-63630 Make sure a record is kept of audiometric tests.

You must:

• Retain a legible copy of all employee audiograms conducted under this part.

– Make sure the record includes:

■ Name and job classification of the employee

■ Date of the audiogram

■ The examiner's name

■ Date of the last acoustic or exhaustive calibration of the audiometer

■ Employee's most recent noise exposure assessment

■ The background sound pressure levels in audiometric test rooms.

[Statutory Authority: RCW 49.17.010, 49.17.040, 49.17.050, 49.17.060. 05-01-166, § 296-307-63630, filed 12/21/04, effective 4/2/05.]

WAC 296-307-63635 Make sure audiometric testing equipment meets these requirements.

You must:

• Use pure tone, air conduction, hearing threshold examinations, with test frequencies including as a minimum 500, 1000, 2000, 3000, 4000, and 6000 Hz

– Tests at each frequency must be taken separately for each ear

– Supra-aural headphones must be used.

• Conduct audiometric tests with audiometers (including microprocessor audiometers) that meet the specifications of, and are maintained and used according to, American National Standard Specification for Audiometers, S3.6-1996

• Check the functional operation of the audiometer each day before use by doing all of the following:

– Make sure the audiometer's output is free from distorted or unwanted sound

– Test either a person with known, stable hearing thresholds or a bio-acoustic simulator

– Perform acoustic calibration for deviations of 10 dB or greater.

• Audiometer calibration must be checked acoustically at least annually to verify continued conformance with ANSI S3.6-1996. Test frequencies below 500 Hz and above 6000 Hz may be omitted from this check

• An exhaustive calibration must be performed at least every two years according to the American National Standard Specification for Audiometers, S3.6-1996. Test frequencies below 500 Hz and above 6000 Hz may be omitted from the calibration

• Provide audiometric test rooms that meet the requirements of ANSI S3.1-1999 American National Standard Maximum Permissible Ambient Noise Levels for Audiometric Test Rooms using the following table of Maximum Ambient Sound Pressure Levels:

Table 4
Maximum Ambient Sound Pressure Levels

Frequency (Hz)	500	1000	2000	4000	8000
Sound Pressure Level (dB)	40	40	47	57	62

Note: The American Industrial Hygiene Association and National Hearing Conservation Association recommend conducting audiograms using the requirements of ANSI S3.1-1999 American National Standard Maximum Permissible Ambient Noise Levels for Audiometric Test Rooms with adjustments at only 500 Hz and below.

[Statutory Authority: RCW 49.17.010, 49.17.040, 49.17.050, 49.17.060. 05-01-166, § 296-307-63635, filed 12/21/04, effective 4/2/05.]

Options to Audiometric Testing

WAC 296-307-638 Summary.

Your responsibility:

This section provides options to baseline audiometric testing for employees assigned to duties with noise exposures for **less than one year.** These program options may also be used to provide added assessment of longer-term employees in addition to audiometric testing.

The requirements of this section apply only if you decide to use auditing or a third-party hearing loss prevention program and do not conduct baseline audiometric testing for those employees.

Hearing Protection Audits

You must:

Conduct hearing protection audits at least quarterly

WAC 296-307-63805

Make sure staff conducting audits are properly trained

WAC 296-307-63810

Assess the hearing protection used by each employee during audits

WAC 296-307-63815

Document your hearing protection audits

WAC 296-307-63820

Third-Party Audiometric Testing

You must:

Make sure third-party hearing loss prevention programs meet the following requirements

WAC 296-307-63825

IMPORTANT:

Hearing protection audits are a tool for use in evaluating your hearing loss prevention program in cases where audiometric testing does not provide a useful measure. For example, if most of your employees are hired on a temporary basis for a few months at a time, audiometric testing may not identify the small changes in hearing acuity that could occur. Auditing provides an alternative to audiometric testing in these cases.

Auditing is not required unless you use it in place of baseline audiometric testing for employees hired for a period of **less than one year** and is permitted as a substitute for audiometric testing only for these employees.

Third-party hearing loss prevention programs are full hearing loss prevention programs and are distinct from audiometric testing provided by third parties as part of your own hearing loss prevention program. These programs may be organized by labor groups, trade associations, labor-management cooperatives, or other organizations to:

• Cover a specific group of employees

OR

• Combine efforts for several employers with common employees.

Although you remain responsible for the program, third-party programs can have at least two benefits over running your own program:

• The audiometric testing is portable between the participating employers so new testing will not be needed when an employee changes employers

• Employees who only work for short periods for any one employer can be monitored under the group program over a longer period of time increasing the effectiveness of the audiometric testing in preventing hearing loss for these employees.

[Statutory Authority: RCW 49.17.010, 49.17.040, 49.17.050, 49.17.060. 05-01-166, § 296-307-638, filed 12/21/04, effective 4/2/05.]

WAC 296-307-63805 Conduct hearing protection audits at least quarterly.

You must:

• Conduct audits at least quarterly to provide a representative assessment of your workplace

– The assessment is representative if it:

■ Covers all processes and work activities in your business at full production levels

AND

■ Covers all employees present on the audit day.

– If your business is mobile or involves variable processes, auditing may need to be repeated more often than quarterly

– Auditing does not need to be repeated more than monthly as long as a reasonable effort is made to cover:

■ The activities with greatest exposure

AND

■ As many employees as possible.

• Assess exposures and hearing protection for the full shift for each employee covered at the time of the audit.

[Statutory Authority: RCW 49.17.010, 49.17.040, 49.17.050, 49.17.060. 05-01-166, § 296-307-63805, filed 12/21/04, effective 4/2/05.]

WAC 296-307-63810 Make sure staff conducting audits are properly trained.

You must:

• Make sure staff conducting hearing protection audits:

– Can demonstrate competence in:

■ Evaluating hearing protection attenuation

■ Evaluating hearing protector choices

■ Assessing the correct use of hearing protectors.

– Are certified by the Council for Accreditation in Occupational Hearing Conservation (CAOHC) or have training in the following areas:

■ Noise and hearing loss prevention

■ Washington state noise regulations

■ Hearing protectors

■ Fitting of hearing protectors

■ Basic noise measurement

■ Hearing loss prevention recordkeeping.

[Statutory Authority: RCW 49.17.010, 49.17.040, 49.17.050, 49.17.060. 05-01-166, § 296-307-63810, filed 12/21/04, effective 4/2/05.]

WAC 296-307-63815 Assess the hearing protection used by each employee during audits.

You must:

• Confirm that:

– Current site conditions during audits are consistent with conditions existing during noise monitoring

– The hearing protection used by the employee is sufficient and appropriate for the conditions

– The hearing protection is worn properly

– The employees are satisfied with the performance and comfort of the hearing protection.

[Statutory Authority: RCW 49.17.010, 49.17.040, 49.17.050, 49.17.060. 05-01-166, § 296-307-63815, filed 12/21/04, effective 4/2/05.]

WAC 296-307-63820 Document your hearing protection audits.

You must:

• Keep a record of audit results for each employee assessed for the length of their employment and for the length of time you will rely upon the audit results

• Include the following information in the record:

– The make and model of the hearing protectors

– The size of the protectors

– Average noise exposure of the employee

– Any problems found with use of the hearing protection

– Any comments or complaints from the employee regarding the hearing protection.

[Statutory Authority: RCW 49.17.010, 49.17.040, 49.17.050, 49.17.060. 05-01-166, § 296-307-63820, filed 12/21/04, effective 4/2/05.]

Third-party Audiometric Tests

WAC 296-307-63825 Make sure third-party hearing loss prevention programs meet the following requirements.

IMPORTANT:

Third-party hearing loss prevention programs are intended:

• For short-term employees hired or assigned to duties having noise exposures **for less than one year**

AND

• For seasonal employees.

However, other employees may be included as long as you meet all requirements for hearing loss follow-ups and recordkeeping.

You must:

• Make sure that the third-party program is:

– Equivalent to an employer program as required by this part

AND

– Uses audiometric testing to evaluate hearing loss.

• Make sure a licensed or certified audiologist, otolaryngologist, or other qualified physician administers the third-party program

• Make sure the third-party program has written procedures for:

– Communicating with participating employers of program requirements

– Follow-up procedures for detected hearing loss

– Annual review of participating employer programs.

• Make sure the following program elements are corrected by you or the third-party program when deficiencies are found:

– Noise exposures

– Hearing protection

– Employee training

– Noise controls.

• Obtain a review of your hearing loss prevention program at least once per year, conducted by the third-party program administrator or their representative, in order to:

– Identify any tasks needing a revised selection of hearing protection

AND

– Provide an overall assessment of the employers' hearing loss prevention activities.

[Statutory Authority: RCW 49.17.010, 49.17.040, 49.17.050, 49.17.060. 05-01-166, § 296-307-63825, filed 12/21/04, effective 4/2/05.]

WAC 296-307-640 Noise definitions.

A-weighted - An adjustment to sound level measurements that reflects the sensitivity of the human ear. Used for evaluating continuous or average noise levels.

Audiogram - A chart, graph, or table resulting from an audiometric test showing an individual's hearing threshold levels as a function of frequency.

Audiologist - A professional, specializing in the study and rehabilitation of hearing, who is certified by the American Speech, Hearing, and Language Association, or the American Academy of Audiology, and is licensed by the state board of examiners.

Baseline audiogram - The audiogram against which future audiograms are compared. The baseline audiogram is collected when an employee is first assigned to work with noise exposure. The baseline audiogram may be revised if persistent standard threshold shift (STS) of improvement is found.

Continuous noise - Noise with peaks spaced no more than one second apart. Continuous noise is measured using sound level meters and noise dosimeters with the slow response setting.

Criterion sound level - A sound level of ninety decibels. An eight-hour exposure to constant 90 dBA noise is a one hundred percent noise dose exposure.

C-weighted - An adjustment to sound level measurements that evenly represents frequencies within the range of human hearing. Used for evaluating impact or impulse noise.

Decibel (dB) - Unit of measurement of sound level. A-weighting, adjusting for the sensitivity of the human ear, is indicated as "dBA." C-weighting, an even reading across the frequencies of human hearing, is indicated as "dBC."

Fast response - A setting for a sound level meter that will allow the meter to respond to noise events of less than one second. Used for evaluating impulse and impact noise levels.

Hertz (Hz) - Unit of measurement of frequency, numerically equal to cycles per second.

Impulsive or impact noise - Noise levels which involve maxima at intervals greater than one second. Impulse and impact noise are measured using the fast response setting on a sound level meter.

Noise dose - The total noise exposure received by an employee during their shift. It can be expressed as a percentage indicating the ratio of exposure received to the noise exposure received in an eight-hour exposure to constant noise at 90 dBA. It may also be expressed as the sound level that would produce the equivalent exposure during an eight-hour period (TWA_8).

Noise dosimeter - An instrument that integrates a function of sound pressure over a period of time in such a manner that it directly indicates a noise dose.

Occupational hearing loss - A reduction in the ability of an individual to hear either caused or contributed to by exposure in the work environment.

Otolaryngologist - A physician specializing in diagnosis and treatment of disorders of the ear, nose and throat.

Permanent threshold shift - A hearing level change that has become persistent and is not expected to improve.

Qualified reviewer - An audiologist, otolaryngologist, or other qualified physician who has experience and training in evaluating occupational audiograms.

Slow response - A setting for sound level meters and dosimeters in which the meter does not register events of less than about one second. Used for evaluating continuous and average noise levels.

Sound level - The intensity of noise as indicated by a sound level meter.

Sound level meter - An instrument that measures sound levels.

Standard threshold shift (STS) - A hearing level change, relative to the baseline audiogram, of an average of 10 dB or more at 2000, 3000, and 4000 Hz in either ear.

Temporary threshold shift - A hearing level change that improves. A temporary threshold shift may occur with exposure to noise and hearing will return to normal within a few days. Temporary threshold shifts can be indicators of exposures that lead to permanent hearing loss.

TWA_8 - Equivalent eight-hour time-weighted average sound level - That sound level, which if constant over an eight-hour period, would result in the same noise dose measured in an environment where the noise level varies.

[Statutory Authority: RCW 49.17.010, 49.17.040, 49.17.050, 49.17.060. 05-01-166, § 296-307-640, filed 12/21/04, effective 4/2/05.]

Part Y-8
Confined Spaces

WAC 296-307-642 Scope. This part applies to all confined spaces and provides requirements to protect employees from the hazards of entering and working in confined spaces. This part applies in any of the following circumstances:

• You have confined spaces in your workplace.

• Your employees will enter another employer's confined spaces.

• A contractor will enter your confined spaces.

• You provide confined space rescue services.

You can use Table 1 to help you decide which requirements to follow for confined spaces.

Table 1
Requirements for Confined Spaces

For confined spaces that are	**The requirements in the following sections apply**					
	644	**646**	**648**	**650**	**652**	**654**
Permit-required confined spaces	X	X	X	X	X	X
Entered by a contractor	X	X	X	X	X	X
Nonpermit confined spaces	X					X
Never entered	X					
If you only:						
Use alternate entry procedures	X	X	X		X	
Have a contractor enter your space	X					
Are a rescue service provider		X	X	X		

Definition:

A **confined space** is a space that is ALL of the following:

• Large enough and arranged so an employee could fully enter the space and work.

• Has limited or restricted entry or exit. Examples of spaces with limited or restricted entry are tanks, vessels, silos, storage bins, hoppers, vaults, excavations, and pits.

• Not primarily designed for human occupancy.

Note:
- Requirements in other chapters may apply to your work. You will find some safety and health requirements are addressed on a broad level in this part, while being addressed for a specific application in another rule. When this happens, both requirements apply and should not conflict. When a conflict does occur, you need to follow the more specific requirement.
- If you are uncertain which requirements to follow, contact your local labor and industries (L&I) office.

[Statutory Authority: RCW 49.17.010, 49.17.040, 49.17.050, 49.17.060. 05-01-166, § 296-307-642, filed 12/21/04, effective 4/2/05.]

WAC 296-307-644 Summary. Identifying and controlling permit-required confined spaces.

Your responsibility:

To identify your permit-required confined spaces and control employee entry.

You must:

Identify permit-required confined spaces.

WAC 296-307-64402

Inform employees and control entry to permit-required confined spaces.

WAC 296-307-64404

Follow these requirements when you contract with another employer to enter your confined space.

WAC 296-307-64406

[Statutory Authority: RCW 49.17.010, 49.17.040, 49.17.050, 49.17.060. 05-01-166, § 296-307-644, filed 12/21/04, effective 4/2/05.]

WAC 296-307-64402 Identify permit-required confined spaces.

IMPORTANT:

If your workplace contains only nonpermit confined spaces and your employees do not enter another employer's confined space, you may follow only the requirements in:

– WAC 296-307-644, Identifying and controlling permit-required confined spaces; and

– WAC 296-307-654, Nonpermit confined space requirements.

You must:

• Identify all permit-required confined spaces in your workplace.

• Assume any confined space is a permit-required confined space, unless you determine the space to be a nonpermit confined space.

– If you enter the space to determine the hazards, follow the requirements in WAC 296-307-650, Permit entry procedures.

– If you evaluate the confined space and there are no potential or actual hazards, you can consider it to be a nonpermit confined space.

• Document your determination that the space is nonpermit, as required by WAC 296-307-654.

Definitions:

A **permit-required confined space or permit space** is a confined space that has one or more of the following characteristics capable of causing death or serious physical harm:

– Contains or has a potential to contain a hazardous atmosphere.

– Contains a material with the potential for engulfing someone who enters the space.

– Has an internal configuration that could allow someone entering to be trapped or asphyxiated by inwardly converging walls or by a floor, which slopes downward and tapers to a smaller cross-section.

– Contains any physical hazard. This includes any recognized health or safety hazards including engulfment in solid or liquid material, electrical shock, or moving parts.

– Contains any other recognized safety or health hazard that could either:

• Impair the ability to self rescue;

OR

• Result in a situation that presents an immediate danger to life or health.

A **nonpermit confined space** is a confined space that does NOT contain actual hazards or potential hazards capable of causing death or serious physical harm.

[Statutory Authority: RCW 49.17.010, 49.17.040, 49.17.050, 49.17.060. 05-01-166, § 296-307-64402, filed 12/21/04, effective 4/2/05.]

WAC 296-307-64404 Inform employees and control entry to permit-required confined spaces.

You must:

(1) Provide information about confined spaces as follows:

• Make available to affected employees and their authorized representatives all information and documents required by this part.

• Inform affected employees about the existence, location, and danger of any permit-required confined spaces in your workplace by:

– Posting danger signs; or

– Using any other equally effective means to inform employees.

Note: A sign reading "Danger-Permit Required Confined Space, DO NOT ENTER" or using pictures or other similar wording employees can understand would satisfy the requirement for a sign.

You must:

(2) Take effective measures to prevent unauthorized employees from entering permit-required confined spaces.

Note: Examples of measures to prevent employee entry include padlocks, bolted covers, special tools to remove covers, and providing employee training.

[Statutory Authority: RCW 49.17.010, 49.17.040, 49.17.050, 49.17.060. 05-01-166, § 296-307-64404, filed 12/21/04, effective 4/2/05.]

WAC 296-307-64406 Follow these requirements when you contract with another employer to enter your confined space.

IMPORTANT:

The contractor is responsible for following all confined space requirements in this part and in other rules that apply.

You must:

• Do **all** of the following if you arrange to have another employer (contractor) perform work that involves entry into your permit-required confined space:

– Inform the contractor:

■ That the workplace contains permit-required confined spaces and entry is allowed only if the applicable requirements of this part are met.

■ Of the identified hazards and your experience with each permit-required confined space.

■ Of any precautions or procedures you require for the protection of employees in or near spaces where the contractor will be working.

– Coordinate entry operations with the contractor, when either employees or employers from the different companies will be working in or near permit-required confined spaces.

– Discuss entry operations with the contractor when they are complete. Include the following in your discussion:

■ The program followed during confined space entry; and

■ Any hazards confronted or created.

[Statutory Authority: RCW 49.17.010, 49.17.040, 49.17.050, 49.17.060. 05-01-166, § 296-307-64406, filed 12/21/04, effective 4/2/05.]

Permit-required Confined Space Program

WAC 296-307-646 Summary.

Your responsibility:

To develop your permit-required confined space program and practices.

IMPORTANT:

This section applies if employees will enter a permit-required confined space.

You must:

Develop a written permit-required confined space program.

WAC 296-307-64602

Meet these additional requirements if your employees enter another employer's confined space.

WAC 296-307-64604

[Statutory Authority: RCW 49.17.010, 49.17.040, 49.17.050, 49.17.060. 05-01-166, § 296-307-646, filed 12/21/04, effective 4/2/05.]

WAC 296-307-64602 Develop a written permit-required confined space program.

IMPORTANT:

• Identify and evaluate the hazards of permit-required confined spaces and the work performed, to assist you in developing your entry program.

You must:

• Develop a written program, before employees enter, that describes the means, procedures, and practices you use for the safe entry of permit-required confined spaces as required by this part. Include the following when applicable to your confined space entry program:

– Documentation of permit entry procedures.

– Documentation used for alternate entry procedures.

– How to reclassify permit-required confined spaces to nonpermit spaces.

– Designation of employee roles, such as entrants, attendants, entry supervisors, rescuers, or those who test or monitor the atmosphere in a permit-required space.

– Identification of designated employee duties.

– Training employees on their designated roles.

– How to identify and evaluate hazards.

– Use and maintenance of equipment.

– How to prevent unauthorized entry.

– How to coordinate entry with another employer.

– How to rescue entrants.

Note: For alternate entry, your written program only needs to meet the requirements of WAC 296-307-648, Employee training, and WAC 296-307-652, Alternate entry procedures, of this part.

You must:

• Consult with affected employees and their authorized representatives when developing and implementing all aspects of your permit-required confined space program.

• Make the written program available to employees and their authorized representatives.

• Update your written program as necessary.

[Statutory Authority: RCW 49.17.010, 49.17.040, 49.17.050, 49.17.060. 05-01-166, § 296-307-64602, filed 12/21/04, effective 4/2/05.]

WAC 296-307-64604 Meet these additional requirements if your employees enter another employer's confined space.

You must:

• Obtain any available information about permit-required confined space hazards and entry operations from the host employer.

• Coordinate entry operations with any other employers whose employees will be working in or near the permit-required confined space.

• Inform the host employer, either through a debriefing or during entry operations, about:

– The entry program you will follow; and

– Any hazards you confronted or created in the space during entry operations.

[Statutory Authority: RCW 49.17.010, 49.17.040, 49.17.050, 49.17.060. 05-01-166, § 296-307-64604, filed 12/21/04, effective 4/2/05.]

Employee Training

WAC 296-307-648 Summary.

Your responsibility:

To make sure employees are trained to perform their designated roles safely.

You must:

Provide employee training.

WAC 296-307-64802

Certify employee proficiency.

WAC 296-307-64804

[Statutory Authority: RCW 49.17.010, 49.17.040, 49.17.050, 49.17.060. 05-01-166, § 296-307-648, filed 12/21/04, effective 4/2/05.]

WAC 296-307-64802 Provide employee training.

You must:

• Provide training to each employee involved in permit-required confined space activities, so they acquire the understanding, knowledge and skills necessary to safely perform assigned duties.

– Establish employee proficiency in their confined space duties.

– Introduce new or revised procedures as necessary.

Note:
- Employers can determine employee proficiency by:
  - Observing employee performance during training exercises that simulate actual confined space conditions.
  - A comprehensive written examination; or
  - Any other method that is effective for the employer.

You must:

• Provide training at the following times:

– Before an employee is first assigned to duties covered by this part.

– Before there is a change in an employee's assigned duties.

– When there is a permit-required confined space hazard for which the employee has not already been trained.

– If you have reason to believe that there are either:

■ Deviations from your procedures for permit-required confined space entry; or

■ Employee knowledge or use of your procedures is inadequate.

[Statutory Authority: RCW 49.17.010, 49.17.040, 49.17.050, 49.17.060. 05-01-166, § 296-307-64802, filed 12/21/04, effective 4/2/05.]

WAC 296-307-64804 Certify employee proficiency.

You must:

• Certify employee proficiency in their assigned duties.

• Make sure the certification:

– Contains each employee's name, the trainer's written or electronic signature or initials, and the dates of training.

– Is available for inspection by employees and their authorized representatives.

[Statutory Authority: RCW 49.17.010, 49.17.040, 49.17.050, 49.17.060. 05-01-166, § 296-307-64804, filed 12/21/04, effective 4/2/05.]

Permit Entry Procedures

WAC 296-307-650 Summary.

Your responsibility:

To establish procedures for the safe permit-required entry of confined spaces.

Implement procedures for entry permits.

WAC 296-307-65002

Use an entry permit that contains all required information.

WAC 296-307-65004

Keep and review your entry permits.

WAC 296-307-65006

Prevent unauthorized entry.

WAC 296-307-65008

Provide, maintain, and use proper equipment.

WAC 296-307-65010

Evaluate and control hazards for safe entry.

WAC 296-307-65012

Make sure you have adequate rescue and emergency services available.

WAC 296-307-65014

Use nonentry rescue systems or methods whenever possible.

WAC 296-307-65016

Make sure entry supervisors perform their responsibilities and duties.

WAC 296-307-65018

Provide an attendant outside the permit-required confined space.

WAC 296-307-65020

Make sure entrants know the hazardous conditions and their duties.

WAC 296-307-65022

Implement procedures for ending entry.

WAC 296-307-65024

[Statutory Authority: RCW 49.17.010, 49.17.040, 49.17.050, 49.17.060. 05-01-166, § 296-307-650, filed 12/21/04, effective 4/2/05.]

WAC 296-307-65002 Implement procedures for entry permits.

You must:

• Identify and evaluate, before employees enter, potential hazards from:

– The permit-required confined space; and

– The work to be performed.

• Complete an entry permit before entry is authorized, documenting that you have completed the means, procedures and practices necessary for safe entry and work.

• Make sure that entrants or their representatives have an opportunity to observe any monitoring or testing, or any actions to eliminate or control hazards, performed to complete the permit.

• Identify the entry supervisor.

– Make sure the entry supervisor signs the entry permit, authorizing entry, before the space is entered.

• Make the completed permit available to entrants or their authorized representatives at the time of entry.

– Do this by either posting the completed permit at the entry location, or by any other equally effective means.

• Make sure the duration of the permit does not exceed the time required to complete the assigned task or job identified on the permit.

• Note any problems encountered during an entry operation on the permit. Use the information to make appropriate revisions to your program, entry operations, means, systems, procedures and practices.

[Statutory Authority: RCW 49.17.010, 49.17.040, 49.17.050, 49.17.060. 05-01-166, § 296-307-65002, filed 12/21/04, effective 4/2/05.]

WAC 296-307-65004 Use an entry permit that contains all required information.

You must:

• Make sure your entry permit identifies **all** of the following that apply to your entry operation:

– The space to be entered.

– Purpose of the entry.

– Date and the authorized duration of the entry permit.

– Hazards of the space to be entered.

– Acceptable entry conditions.

– Results of initial and periodic tests performed to evaluate and identify the hazards and conditions of the space, accompanied by the names or initials of the testers and by an indication of when the tests were performed.

– Appropriate measures used before entry to isolate the space, and eliminate or control hazards.

• Examples of appropriate measures include the lockout or tagging of equipment and procedures for purging, inerting, ventilating, and flushing permit-required confined spaces.

– Names of entrants and current attendants.

• Other means include the use of rosters or tracking systems as long as the attendant can determine quickly and accurately, for the duration of the permit, which entrants are inside the space.

– The current entry supervisor.

– A space for the signature or initials of the original supervisor authorizing entry.

– Communication procedures for entrants and attendants to maintain contact during the entry.

– Equipment provided for safe entry, such as:

■ Personal protective equipment (PPE).

■ Testing equipment.

■ Communications equipment.

■ Alarm systems.

■ Rescue equipment.

– Rescue and emergency services available, and how to contact them. Include equipment to use, and names and contact information.

– Other information needed for safety in the particular confined space.

– Additional permits issued for work in the space, such as for hot work.

[Statutory Authority: RCW 49.17.010, 49.17.040, 49.17.050, 49.17.060. 05-01-166, § 296-307-65004, filed 12/21/04, effective 4/2/05.]

WAC 296-307-65006 Keep and review your entry permits.

You must:

• Keep entry permits for at least one year.

• Keep entry permits or other atmospheric monitoring records that show the actual atmosphere an employee entered or worked in, as employee exposure records.

• Review your permit-required confined space entry program as follows:

– Conduct a review when you have any reason to believe your entry program may not protect employees, and revise your program before allowing subsequent entries.

Note: Examples of circumstances requiring the review of your program include the following:
- There is unauthorized entry of a permit space.
- A permit space hazard not covered by the permit is found.
- A condition prohibited by the permit occurs.
- An injury or near-miss occurs during entry.
- There is a change in the use or configuration of a permit space.
- An employee complains about the effectiveness of the program.

You must:

• Review canceled entry permits within one year following each entry to evaluate:

– Your permit-required confined space program.

– The protection provided to employees entering permit-required confined spaces.

• Update your written permit-required confined space entry program as necessary.

Note: Employers may perform a single annual review covering all entries performed during a twelve-month period. If no entry is performed during a twelve-month period, no review is necessary.

[Statutory Authority: RCW 49.17.010, 49.17.040, 49.17.050, 49.17.060. 05-01-166, § 296-307-65006, filed 12/21/04, effective 4/2/05.]

WAC 296-307-65008 Prevent unauthorized entry.

You must:

• Implement measures necessary to prevent unauthorized entry into permit-required confined spaces, when conducting authorized entry.

Note:
- When removing entrance covers to open the confined space, protect entrants and those outside the confined space from hazards.
- Examples of measures to prevent unauthorized entry are signs, barricades, warning tape, and an attendant.

[Statutory Authority: RCW 49.17.010, 49.17.040, 49.17.050, 49.17.060. 05-01-166, § 296-307-65008, filed 12/21/04, effective 4/2/05.]

WAC 296-307-65010 Provide, maintain, and use proper equipment.

You must:

• Provide the equipment in Table 2, when needed and at no cost to employees.

• Make sure that employees use provided equipment properly.

• Maintain the provided equipment.

Table 2
Equipment Provided to Employees at No Cost

Type of equipment	For
Testing and monitoring equipment	Evaluating permit-required confined space conditions
Ventilating equipment	Obtaining and maintaining acceptable entry conditions
Communication equipment	Effective communication between the attendant and the entrants and to initiate rescue when required
Personal protective equipment (PPE)	Protecting employees from hazards of the space or the work performed
Lighting equipment	Employees to see well enough to work safely and to exit the space quickly in an emergency
Barriers or shields, such as pedestrian, vehicle or other barriers	Protecting employees from hazards outside of the space
Ladders	Safe entry and exit by entrants
Rescue and emergency equipment, except for equipment provided by the rescue service provider	Safe and effective rescue
Any other equipment	Safe entry into and rescue from permit-required confined spaces

[Statutory Authority: RCW 49.17.010, 49.17.040, 49.17.050, 49.17.060. 05-01-166, § 296-307-65010, filed 12/21/04, effective 4/2/05.]

WAC 296-307-65012 Evaluate and control hazards for safe entry.

• Evaluate and control hazards for safe entry into permit-required confined spaces by doing all the following:

– Test for atmospheric hazards, in this order:

■ Oxygen.

■ Combustible gases and vapors.

■ Toxic gases and vapors.

– Provide each entrant or their authorized representative an opportunity to observe any of the following:

■ Preentry testing.

■ Subsequent testing.

■ Monitoring of permit-required spaces.

– Reevaluate the permit-required space in the presence of any entrant, or their authorized representative, who requests this to be done because they have reason to believe that the evaluation of that space may not have been adequate.

– Upon request, immediately provide each entrant or their authorized representative, with the results of any testing required by this rule.

– Continuously monitor conditions in areas where entrants are working, when isolation of the space is not feasible.

• Examples would be a large space or space that is part of a continuous system, such as a sewer.

• Evaluate space conditions during entry as follows:

Table 3
Evaluating Space Conditions

You must:	In order to
Test conditions before entry	Determine that acceptable entry conditions exist before entry is authorized by the entry supervisor
Test or evaluate space conditions during entry	Determine that acceptable entry conditions are being maintained during entry operations
Evaluate entry operations	Make sure entrants of more than one employer working at the same time in or around a permit-required confined space, do not endanger each other

IMPORTANT:

This section applies to both:

• Employers whose employees use permit entry procedures; and

• Employers who provide rescue services.

[Statutory Authority: RCW 49.17.010, 49.17.040, 49.17.050, 49.17.060. 05-01-166, § 296-307-65012, filed 12/21/04, effective 4/2/05.]

WAC 296-307-65014 Make sure you have adequate rescue and emergency services available.

You must:

(1) Make sure you have adequate rescue and emergency services available during your permit-required confined space entry operations.

• Evaluate and select rescue teams or services who can:

– Respond to a rescue call in a timely manner. Timeliness is based on the identified hazards. Rescuers must have the capability to reach potential victims within an appropriate time frame based on the identified permit space hazards.

– Proficiently rescue employees from a permit-required confined space in your workplace. Rescuers must have the appropriate equipment for the type of rescue.

• Make sure that at least one member of the rescue team or service holds a current certification in first aid and cardiopulmonary resuscitation (CPR).

• Inform each rescue team or service about the hazards they may confront when called to perform rescue.

• Provide the rescue team or service with access to all permit spaces from which rescue may be necessary.

– This will allow them to develop appropriate rescue plans and to practice rescue operations.

Note: What will be considered timely will vary according to the specific hazards involved in each entry. For example, WAC 296-307-594, Respirators, requires that employers provide a standby person or persons capable of immediate action to rescue employee(s) for work areas considered to contain an IDLH atmosphere.

You must:

(2) Provide employees, assigned to provide permit-required confined space rescue and emergency services, with:

• Personal protective equipment (PPE) needed for safe entry.

• Other equipment required to conduct rescues safely.

• Training so they are:

– Proficient in the use of the PPE and other equipment.

– Proficient as an entrant of permit-required confined spaces.

– Able to safely perform assigned rescue and emergency duties.

– Knowledgeable in basic first aid and cardiopulmonary resuscitation (CPR).

• Practice sessions for permit-required confined space rescues **at least** once every twelve months where dummies, manikins, or actual persons are removed from either:

– The actual permit spaces; or

– Representative permit spaces that simulate the opening size, configuration, and accessibility, of permit spaces where rescue will be performed.

(3) Establish procedures for:

• Contacting rescue and emergency services.

• Rescuing entrants from permit-required confined spaces.

• Providing necessary emergency services to rescued entrants.

• Preventing unauthorized persons from attempting a rescue.

[Statutory Authority: RCW 49.17.010, 49.17.040, 49.17.050, 49.17.060. 05-01-166, § 296-307-65014, filed 12/21/04, effective 4/2/05.]

WAC 296-307-65016 Use nonentry rescue systems or methods whenever possible.

You must:

• Use nonentry retrieval systems or methods to rescue entrants in a permit-required confined space unless this:

– Would increase the overall risk of injury to entrants; or

– Would not contribute to the rescue of the entrant.

• Make sure each entrant uses a chest or full-body harness, with a retrieval line attached to the harness at one of the following locations:

– At the center of the employee's back, near shoulder level.

– Above the employee's head.

– At another point which presents a profile small enough for the successful removal of the employee.

• Attach the retrieval line to a mechanical device or fixed point outside the space, so rescue can begin as soon as necessary.

• Make sure a mechanical device is available to retrieve entrants from vertical spaces more than five feet (1.52 m) deep.

Note: When you can demonstrate that the use of a chest or full-body harness is not feasible or creates a greater hazard, then you may use wristlets or another method shown to be the safest and most effective alternative.

[Statutory Authority: RCW 49.17.010, 49.17.040, 49.17.050, 49.17.060. 05-01-166, § 296-307-65016, filed 12/21/04, effective 4/2/05.]

WAC 296-307-65018 Make sure entry supervisors perform their responsibilities and duties.

You must:

• Make sure that an entry supervisor:

– Authorizes the entry into a permit-required confined space by signing the entry permit.

– Oversees entry operations.

– Knows about the hazards that may be faced during entry, including the mode, signs or symptoms, and consequences of the exposure.

– Verifies and checks **all** of the following:

■ The appropriate entries have been made on the permit.

■ All tests specified by the permit have been conducted.

■ All procedures and equipment specified by the permit are in place before approving the permit and allowing entry to the space.

– Terminates the entry and cancels the permit when:

■ The assigned task or job has been completed.

■ A condition in the space that is not covered by the entry permit is discovered.

– Verifies that rescue services are available and that there is a way to contact them.

– Removes unauthorized individuals who enter or attempt to enter the permit-required confined space during entry operations.

– Determines that entry operations remain consistent with the terms of the entry permit and acceptable entry conditions are maintained:

■ Whenever responsibility for a permit-required space entry operation is transferred; and

■ At regular intervals dictated by the hazards and operations performed within the space.

Note:
- Make sure entry supervisors have the required knowledge and proficiency to perform the job duties and responsibilities required by this part.
- The entry supervisor may also perform other duties under this part, such as attendant or entrant, if they are trained and proficient in those duties.
- The responsibility of the entry supervisor may be passed from one supervisor to another during an entry operation.

[Statutory Authority: RCW 49.17.010, 49.17.040, 49.17.050, 49.17.060. 05-01-166, § 296-307-65018, filed 12/21/04, effective 4/2/05.]

WAC 296-307-65020 Provide an attendant outside the permit-required confined space.

IMPORTANT:

• The number of attendants assigned should be tailored to the requirements of the space and the work performed.

• You need to assess if it is appropriate or possible to have multiple permit spaces monitored by a single attendant, or have an attendant stationed at a location outside each space. Video cameras and radios are examples of tools that may assist an attendant monitoring more than one space.

• Attendants may be stationed at any location outside the permit-required confined space if the duties described in this section can be effectively performed for each space that is monitored.

You must:

• Provide at least one attendant outside the permit-required confined space during entry operations.

• Make sure each permit-required confined space attendant:

– Understands the hazards that may be faced during entry, including the mode, signs or symptoms, and results of exposure to the hazards.

– Is aware of the behavioral effects of exposure to the hazard.

– Continuously maintains an accurate count of entrants in the space.

– Maintains an accurate record of who is in the permit-required confined space.

– Communicates with entrants as necessary to monitor their status or alert them of the need to evacuate the space.

– Monitors activities inside and outside the space to determine if it is safe for entrants to remain in the space.

– Orders entrants to evacuate the space immediately if **any** of the following conditions occur:

■ A prohibited condition.

■ The behavioral effects of hazardous exposure on an entrant.

■ A situation outside the space that could endanger entrants.

■ The attendant cannot effectively and safely perform all the duties required in this part.

– Takes the following actions when unauthorized persons approach or enter a space:

■ Warns unauthorized persons to stay away from the space.

■ Tells the unauthorized persons to exit immediately if they have entered the space.

■ Informs entrants and the entry supervisor if unauthorized persons have entered the space.

– Performs nonentry rescues as specified by your rescue procedure.

– Has the means to respond to an emergency affecting one or more of the permit spaces being monitored without preventing performance of the attendant's duties to the other spaces being monitored.

– Carries out no duties that might interfere with their primary duty to monitor and protect the entrants.

– Calls for rescue and other emergency services as soon as entrants may need assistance to escape from the space.

– Monitors entry operations until relieved by another attendant or all entrants are out of the space.

[Statutory Authority: RCW 49.17.010, 49.17.040, 49.17.050, 49.17.060. 05-01-166, § 296-307-65020, filed 12/21/04, effective 4/2/05.]

WAC 296-307-65022 Make sure entrants know the hazardous conditions and their duties.

You must:

• Make sure that all entrants:

– Know the hazards they may face during entry, including the mode, signs or symptoms, and results of exposure to the hazards.

– Use equipment properly.

– Communicate with the attendant as necessary so the attendant can:

■ Monitor entrant status.

■ Alert entrants of the need to evacuate.

– Alert the attendant whenever either of these situations exist:

■ A warning sign or symptom of exposure to a dangerous situation such as, behavioral changes, euphoria, giddiness potentially from lack of oxygen or exposure to solvents.

■ A prohibited condition.

– Exit from the permit-required confined space as quickly as possible when one of the following occurs:

■ The attendant or entry supervisor gives an order to evacuate.

■ The entrant recognizes any warning sign or symptom of exposure to a dangerous situation.

■ The entrant detects a prohibited condition.

■ An evacuation alarm is activated.

[Statutory Authority: RCW 49.17.010, 49.17.040, 49.17.050, 49.17.060. 05-01-166, § 296-307-65022, filed 12/21/04, effective 4/2/05.]

WAC 296-307-65024 Implement procedures for ending entry.

You must:

• Make sure you terminate the entry when entry operations are completed, including securing an entrance cover and canceling the permit.

[Statutory Authority: RCW 49.17.010, 49.17.040, 49.17.050, 49.17.060. 05-01-166, § 296-307-65024, filed 12/21/04, effective 4/2/05.]

WAC 296-307-652 Alternate entry procedures.

Summary:

Your responsibility:

To choose alternate entry procedures for spaces where the only hazard is a hazardous atmosphere.

IMPORTANT:

In addition to this section, you also need to meet the requirements in the following sections of this part:

– WAC 296-307-644, Identifying and controlling permit-required confined spaces.

– WAC 296-307-646, Permit-required confined space program.

– WAC 296-307-648, Employee training.

You must:

Make sure the following conditions are met if using alternate entry procedures.

WAC 296-307-65202

Follow these alternate entry procedures for permit-required confined spaces.

WAC 296-307-65204

[Statutory Authority: RCW 49.17.010, 49.17.040, 49.17.050, 49.17.060. 05-01-166, § 296-307-652, filed 12/21/04, effective 4/2/05.]

WAC 296-307-65202 Make sure the following conditions are met if using alternate entry procedures.

You must:

• Make sure, when using alternate entry procedures, instead of permit entry procedures, that you have monitoring and inspection data that supports the following:

– That the only hazard of the permit-required confined space is an actual or potentially hazardous atmosphere.

– That continuous forced air ventilation alone is all that is needed to maintain the permit-required confined space for safe entry.

• Make sure an entry to obtain monitoring and inspection data or to eliminate hazards is performed according to WAC 296-307-500, Permit entry procedures.

• Make sure all documentation produced is available to each affected employee and their authorized representative.

[Statutory Authority: RCW 49.17.010, 49.17.040, 49.17.050, 49.17.060. 05-01-166, § 296-307-65202, filed 12/21/04, effective 4/2/05.]

WAC 296-307-65204 Follow these alternate entry procedures for permit-required confined spaces.

You must:

• Use the following alternate entry procedures:

– Eliminate any unsafe conditions before removing an entrance cover.

■ When entrance covers are removed, promptly guard the opening with a railing, temporary cover, or other temporary barrier to prevent accidental falls through the opening and protect entrants from objects falling into the space.

■ Certify that preentry measures have been taken (such as safe removal of the cover and having protection needed to gather preentry data), with the date, location of the space, and signature of the person certifying.

• Make the preentry certification available before entry to each entrant.

– Before an employee enters the confined space, test the internal atmosphere with a calibrated, direct-reading instrument for all of the following, in this order:

■ Oxygen content.

■ Flammable gases and vapors.

■ Potential toxic air contaminants.

– Provide entrants, or their authorized representatives, with an opportunity to observe the preentry and periodic testing.

– Make sure the atmosphere within the space is not hazardous when entrants are present.

– Use continuous forced air ventilation, as follows:

■ Wait until the forced air ventilation has removed any hazardous atmosphere before allowing entrants into the space.

■ Direct forced air ventilation toward the immediate areas where employees are, or will be, and continue ventilation until all employees have left the space.

• Provide the air supply from a clean source and make sure it does not increase hazards in the space.

– Test the atmosphere within the space as needed to make sure hazards do not accumulate.

– If a hazardous atmosphere is detected during entry, do all of the following:

■ Evacuate employees from the space immediately.

■ Evaluate the space to determine how the hazardous atmosphere developed.

■ Implement measures to protect employees from the hazardous atmosphere before continuing the entry operation.

■ Verify the space is safe for entry before continuing the entry operation.

[Statutory Authority: RCW 49.17.010, 49.17.040, 49.17.050, 49.17.060. 05-01-166, § 296-307-65204, filed 12/21/04, effective 4/2/05.]

WAC 296-307-654 Nonpermit confined spaces requirements.

Summary:

IMPORTANT:

A confined space may be classified as a nonpermit confined space for as long as the hazards remain eliminated. Once a hazard is present, you must follow all requirements of this part that apply.

Your responsibility:

To make sure any space you classify as nonpermit does not have the potential to contain serious health or safety hazards.

You must:

Follow these requirements when classifying a confined space as a nonpermit confined space.

WAC 296-307-65402

Reevaluate nonpermit confined spaces if hazards develop.

WAC 296-307-65404

[Statutory Authority: RCW 49.17.010, 49.17.040, 49.17.050, 49.17.060. 05-01-166, § 296-307-654, filed 12/21/04, effective 4/2/05.]

WAC 296-307-65402 Follow these requirements when classifying a confined space as a nonpermit confined space.

You must:

• Make sure the confined space meets these conditions to be classified as nonpermit confined spaces:

– The confined space does not contain an actual or potential hazardous atmosphere.

– The confined space does not contain hazards capable of causing death or serious physical harm. This includes any recognized health or safety hazards including engulfment in solid or liquid material, electrical shock, or moving parts.

– If you must enter to remove hazards, the space must be treated as a permit-required confined space until hazards have been eliminated.

Note:
- Controlling atmospheric hazards through forced air ventilation does not eliminate the hazards.
- You should evaluate the use of lockout-tagout, as covered in WAC 296-307-320, to determine if using it fully eliminates the hazard.
- You are allowed to use alternate entry procedures covered in WAC 296-307-652, if you can demonstrate that forced air ventilation alone will control all hazards in the space.

You must:

• Document how you determined the confined space contained no permit-required confined space hazards. Certify this documentation with the following:

– Date.

– Location of the space.

– Signature of the person making the determination.

• Make the certification available to each entrant, or their authorized representative.

Note: This certification must be completed every time a permit-required confined space is reclassified as a nonpermit space.

[Statutory Authority: RCW 49.17.010, 49.17.040, 49.17.050, 49.17.060. 05-01-166, § 296-307-65402, filed 12/21/04, effective 4/2/05.]

WAC 296-307-65404 Reevaluate nonpermit confined spaces if hazards develop.

You must:

• Reclassify a nonpermit confined space to a permit-required confined space, if necessary, when changes in the use or configuration of the space increase the hazards to entrants.

• Make sure all employees exit the space if hazards develop. You must then reevaluate the space and determine whether it must be reclassified as a permit-required confined space.

[Statutory Authority: RCW 49.17.010, 49.17.040, 49.17.050, 49.17.060. 05-01-166, § 296-307-65404, filed 12/21/04, effective 4/2/05.]

WAC 296-307-656 Definitions.

Acceptable entry conditions:

The conditions that must exist in a permit-required confined space to allow safe entry and work.

Attendant:

An individual stationed outside one or more permit-required confined spaces to monitor the entrants.

Blanking or blinding:

The absolute closure of a pipe, line, or duct by fastening a solid plate (such as a spectacle blind or a skillet blind) that completely covers the bore. It is capable of withstanding the maximum pressure of the pipe, line, or duct with no leakage beyond the plate.

Confined space:

A space that is **all** of the following:

• Large enough and arranged so an employee could fully enter the space and work.

• Has limited or restricted entry or exit. Examples of spaces with limited or restricted entry are tanks, vessels, silos, storage bins, hoppers, vaults, excavations, and pits.

• Not primarily designed for human occupancy.

Double block and bleed:

The closure of a line, duct, or pipe by closing and locking or tagging two in-line valves and by opening and locking or tagging a drain or vent valve in the line between the two closed valves.

Emergency:

Any occurrence (including any failure of hazard control or monitoring equipment) or event internal or external to the permit-required confined space that could endanger authorized entrants.

Engulfment:

The surrounding capture of a person by a liquid or finely divided (flowable) solid substance that can be inhaled to cause death by filling or plugging the respiratory system or that can exert enough force on the body to cause death by strangulation, constriction, or crushing.

Enter (entry):

The action by which a person passes through an opening into a permit-required confined space and includes work activities in that space. Entry is considered to have occurred as soon as any part of the entrant's body breaks the plane of an opening into the space.

Note: If the opening is large enough for the worker to fully enter the space, a permit is required even for partial body entry. Permits are not required for partial body entry where the opening is not large enough for full entry, although other rules such as lockout-tagout, WAC 296-307-320 or respiratory hazards, WAC 296-307-624 may apply.

Entrant:

An employee who is authorized by the employer to enter a permit-required confined space.

Entry permit (permit):

The written or printed document that is provided by you to allow and control entry into a permit-required confined space and that contains the information required in WAC 296-307-650, Permit entry procedures.

Entry supervisor:

The person (such as the employer, crew leader, or crew chief) responsible for:

• Determining if acceptable entry conditions are present at a permit-required confined space where entry is planned;

• Authorizing entry and overseeing entry operations; and

• Terminating entry as required.

Hazardous atmosphere:

An atmosphere that may expose employees to the risk of death, incapacitation, impairment of ability to self-rescue (that is, escape unaided from a permit-required confined space), injury, or acute illness caused by one or more of the following:

• Flammable gas, vapor, or mist in excess of ten percent of its lower flammable limit (LFL).

• Airborne combustible dust at a concentration that meets or exceeds its LFL.

Note: This concentration may be approximated as a condition in which the dust obscures vision at a distance of five feet (1.52 m) or less.

• Atmospheric oxygen concentration below 19.5 percent or above 23.5 percent.

• Atmospheric concentration of any substance which may exceed a permissible exposure limit. For additional information about atmospheric concentration, see chapter 296-62 WAC, Parts F, G, and I, General occupational health standards and WAC 296-307-624, Respiratory hazards.

Note: An airborne concentration of a substance that is not capable of causing death, incapacitation, impairment of ability to self-rescue, injury, or acute illness due to its health effects is not covered by this definition.

• Any other atmospheric condition that is immediately dangerous to life or health.

Note: You can find guidance on establishing acceptable atmospheric conditions for air contaminants, which have no WISHA-determined doses or permissible exposure limits using other sources of information, such as:

- Material safety data sheets required by WAC 296-307-550, Employer chemical hazard communication.
- Published information.
- Internal documents.

Hot work permit:

A written authorization to perform operations, for example, riveting, welding, cutting, burning, and heating, that can provide a source of ignition.

Immediately dangerous to life or health (IDLH):

Any of the following conditions:

• An immediate or delayed threat to life.

• Anything that would cause irreversible adverse health effects.

• Anything that would interfere with an individual's ability to escape unaided from a permit-required confined space.

Note: Some materials - hydrogen fluoride gas and cadmium vapor, for example - may produce immediate transient effects that, even if severe, may pass without medical attention, but are followed by sudden, possibly fatal collapse twelve to seventy-two hours after exposure. The victim "feels normal" after recovery from transient effects until collapse. Such materials in hazardous quantities are considered to be "immediately" dangerous to life or health (IDLH).

Inerting:

The displacement of the atmosphere in a permit-required confined space by a noncombustible gas (such as nitrogen) to such an extent that the resulting atmosphere is noncombustible.

Note: This procedure produces an IDLH oxygen-deficient atmosphere.

Isolation:

The process by which a permit-required confined space is removed from service and completely protected against the release of energy and material into the space by such means as: Blanking or blinding; misaligning or removing sections of lines, pipes, or ducts; a double block and bleed system; lockout or tagout of all sources of energy; or blocking or disconnecting all mechanical linkages.

Line breaking:

The intentional opening of a pipe, line, or duct that is or has been carrying flammable, corrosive, or toxic material, an inert gas, or any fluid at a volume, pressure, or temperature capable of causing injury.

Nonpermit confined space:

A confined space that does NOT contain actual hazards or potential hazards capable of causing death or serious physical harm.

Oxygen deficient atmosphere:

An atmosphere containing less than 19.5 percent oxygen by volume.

Oxygen enriched atmosphere:

An atmosphere containing more than 23.5 percent oxygen by volume.

Permit-required confined space or permit space:

A confined space that has one or more of the following characteristics capable of causing death or serious physical harm:

• Contains or has a potential to contain a hazardous atmosphere.

• Contains a material with the potential for engulfing someone who enters.

• Has an internal configuration that could allow someone entering to be trapped or asphyxiated by inwardly converging walls or by a floor, which slopes downward and tapers to a smaller cross section.

• Contains any physical hazard. This includes any recognized health or safety hazards including engulfment in solid or liquid material, electrical shock, or moving parts.

• Contains any other recognized serious safety or health hazard that could either:

– Impair the ability to self-rescue; or

– Result in a situation that presents an immediate danger to life or health.

Permit-required confined space program:

An overall program for:

• Controlling and appropriately protecting employees from permit-required confined space hazards; and

• Regulating employee entry into permit-required confined spaces.

Prohibited condition:

Any condition in a permit-required confined space that is not allowed by the permit during the authorized entry period.

Rescue service:

The personnel designated to rescue employees from permit-required confined spaces.

Retrieval system:

The equipment used for nonentry rescue of persons from permit-required confined spaces, such as a retrieval line, full-body harness or wristlets, and a lifting device or anchor.

Testing:

The process of identifying and evaluating the hazards that entrants may be exposed to in a permit-required confined space. Testing includes specifying the tests that are to be performed in the permit-required confined space.

Note: Testing allows employers to devise and implement adequate controls to protect entrants during entry, and to determine if acceptable entry conditions are present.

[Statutory Authority: RCW 49.17.010, 49.17.040, 49.17.050, 49.17.060. 05-01-166, § 296-307-656, filed 12/21/04, effective 4/2/05.]

Part Y-10
Emergency Response

WAC 296-307-704 Scope. What is the purpose of WAC 296-307-704, Emergency response to hazardous substance releases?

To state the minimum requirements that help you protect the safety and health of your employees during a response to hazardous substance releases in your workplace or any other location.

Do the requirements of this rule apply to your workplace?

This section applies if your employees are, or could become, involved in responding to uncontrolled releases of hazardous substances in your workplace or any other location. Use the scope flow chart, and definitions that follow, to determine if this section applies to your workplace(s). Defined words are *italicized* in the flow chart.

307 - FLOWCHART

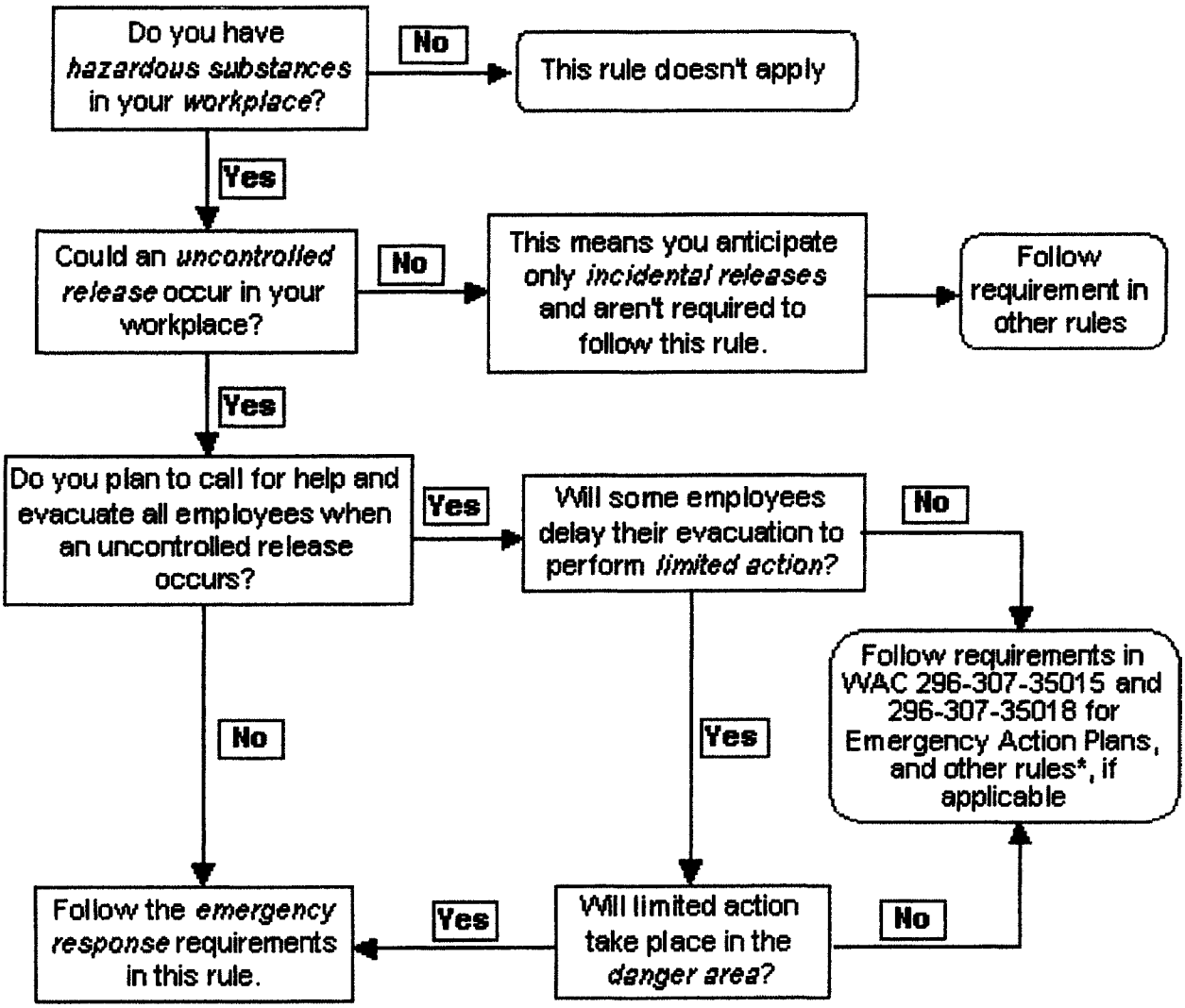

* The flow chart references other rules applicable to your workplace depending on conditions and hazards. Examples include:

- WAC 296-62-400, Hazardous chemicals in laboratories
- WAC 296-307-594, Respiratory protection.

Definitions applicable to the flow chart (see WAC 296-307-70480 for additional definitions used in this section):

Danger area

Areas where conditions pose a serious danger to employees, such as areas where:

• Immediately dangerous to life or health (IDLH) conditions could exist

OR

• High levels of exposure to toxic substances could exist

OR

• There is a potential for exceeding the lower explosive limit (LEL), also known as the lower flammability limit (LFL), of a substance.

Emergency response

A response to an anticipated release of a hazardous substance that is, or could become, an *uncontrolled release*.

Hazardous substance

Any biological, radiological, or chemical substance that can have adverse effects on humans. (See WAC 296-307-70480 for a more specific definition.)

Immediately dangerous to life or health (IDLH)

Any atmospheric condition that would:

• Cause an immediate threat to life

• Cause permanent or delayed adverse health effects

• Interfere with an employee's ability to escape.

Incidental release

A release that can be safely controlled at the time of the release and does not have the potential to become an *uncontrolled release*.

Example of a situation that results in an incidental release:

A tanker truck is receiving a load of hazardous liquid when a leak occurs. The driver knows the only hazard from the liquid is minor skin irritation. The employer has trained the driver on procedures and provided equipment to use for a release of this quantity. The driver puts on skin protection and stops the leak. A spill kit is used to contain, absorb, and pick up the spilled material for disposal.

Limited action

Action necessary to:

• Secure an operation during emergency responses,

OR

• Prevent an incident from increasing in severity.

Examples include shutting down processes and closing emergency valves.

Release

A spill, leak, or other type of hazardous substance discharge.

Uncontrolled release

A release where significant safety and health risks could be created. Releases of hazardous substances that are either incidental or could not create a safety or health hazard (i.e., fire, explosion or chemical exposure) are not considered to be uncontrolled releases.

Examples of conditions that could create a significant safety and health risk:

• Large-quantity releases

• Small-releases that could be highly toxic

• Airborne exposures that could exceed a WISHA permissible exposure limit or a published exposure limit and employees are not adequately trained or equipped to control the release.

Example of an uncontrolled release:

A forklift driver knocks over a container of a solvent-based liquid, releasing the contents onto the warehouse floor. The driver has been trained to recognize the vapor is flammable and moderately toxic when inhaled. The driver has not been trained or provided appropriate equipment to address this type of spill. In this situation, it is not safe for the driver to attempt a response. The driver needs to notify someone of the release so an emergency response can be initiated.

Workplace

• A fixed facility

OR

• A temporary location (such as a traffic corridor)

OR

• Locations where employees respond to emergencies.

Summary:

Your responsibility:

To anticipate, plan for, and manage emergency response operations so employees are protected from hazardous substances and conditions.

Note: Other chapters may apply to your workplace, such as:
• Chapter 296-62 WAC, General occupational health standards.

You will find some safety and health requirements (for example, personal protective equipment) are addressed on a general level in the core rules, while being addressed for a specific application in this section. When this happens, both requirements apply and should not conflict.

If you are uncertain which requirements to follow, you must comply with the more protective requirement. Contact your local L&I office if you need assistance in making this determination.

You must:

WAC 296-307-70410 Planning

WAC 296-307-70415 Training

WAC 296-307-70420 Medical surveillance

WAC 296-307-70425 Keep records

WAC 296-307-70430 Incident requirements

WAC 296-307-70435 Implement and maintain an incident command system (ICS) (incident command system)

WAC 296-307-70440 Prepare skilled support personnel

WAC 296-307-70445 Make sure the incident commander oversees activities during the response

WAC 296-307-70450 Use the buddy system in danger areas

WAC 296-307-70455 Provide rescue and medical assistance

WAC 296-307-70460 Personal protective equipment

WAC 296-307-70465 Control hazards created by personal protective equipment (PPE)

WAC 296-307-70470 Use personal protective equipment (PPE) properly

WAC 296-307-70475 Postemergency response

WAC 296-307-70480 Definitions.

[Statutory Authority: RCW 49.17.010, 49.17.040, 49.17.050, 49.17.060. 05-01-166, § 296-307-704, filed 12/21/04, effective 4/2/05.]

WAC 296-307-70410 Planning. Develop an emergency response plan.

Note:
- You may already have an emergency response plan, such as required by chapter 296-843 WAC, Hazardous waste operations or by state and locally coordinated response efforts (Section 303 of Superfund Amendments and Reauthorization Act (SARA), Title III). You may use those plans to comply with this section, if they include the items listed below.
- Before a written emergency response plan can be developed, you will need to anticipate the types of uncontrolled releases that employees could encounter in your workplace(s).

You must:

(1) Make sure your plan is written and adequately addresses, as a minimum, all of the following:

• Preemergency planning and coordination with additional responders (including personnel from other employers such as: Fire departments, law enforcement agencies, emergency medical services, and state or federal agencies).

• Personnel roles, (see Table 1) and lines of authority and communications for all affected parties including responders.

• Employee training (see WAC 296-307-70415, train your employees), for more detail:

Note:
- Responders' level of training depends on the duties and roles the employer assigns.
- Training for the employees' role should address the competencies specified in Tables 3 through 6.
- Training on specific substances may be appropriate depending on the number and characteristics of hazardous substances expected to be encountered. For example, if employees may only respond to one substance, you could provide training (covering the knowledge and skills specified in Tables 3 through 6) relevant to that single substance. If employees might respond to a range of hazardous substances, training may be required to cover categories of hazardous substances.

You must:

• Videos and automated training methods (for example: Interactive computer based programs) may be used in training; however, instructors must be readily available to:

– Encourage and provide responses to questions for the benefit of the group

– Evaluate employees' understanding of the material

– Provide instructional interaction to the group.

• Emergency recognition

• Immediate emergency procedures including:

– Methods of alerting employees (see WAC 296-307-345, Employee alarm systems) and outside responders

– Procedures for limited action (emergency prevention).

Note: ***Limited action*** includes shutting down processes, closing emergency valves and other critical actions to secure the operation, or prevent the incident from increasing in severity.

Limited Action and Employee Roles	
If. . .	**Then employees involved would be:**
Limited action could be conducted in the danger area	Considered emergency responders
Limited action will not be conducted in IDLH conditions	Considered evacuees, not emergency responders

• Details of who will evacuate immediately and who will remain behind for limited action

• Evacuation routes and procedures

• How to establish safe distances and places of refuge (for example, during emergency response the incident commander (IC) decides to make changes based on new developments, i.e., changes in the wind direction).

You must:

• Methods of securing and controlling access to the site

• Emergency medical treatment and first aid

• A complete personal protective equipment (PPE) program that addresses:

– Selection of PPE including selection criteria to be used and the identification, specified use and limitations of the PPE selected

– Training on proper use of PPE (including maintenance)

– Hazards created by wearing PPE including heat stress during temperature extremes, and/or other appropriate medical considerations

– Criteria used for determining the proper fit of PPE

– Procedures covering proper use of PPE including procedures for inspection, putting it on (donning) and removing it (doffing)

– Maintenance of PPE including procedures for decontamination, disposal and storage

– Methods used to evaluate the effectiveness of your PPE program.

Note:
- If a manufacturer's printed information or WISHA rule adequately addresses procedural requirements (such as donning or doffing for PPE), it is not necessary to rewrite this into your program; simply attach the printed information.
- You may use written procedures provided by the equipment manufacturer when they meet the requirements of other chapters, including chapter 296-307 WAC, Part Y-5, Respirators.

– Emergency equipment

– Emergency response procedures

– Decontamination procedures determined by a hazardous materials specialist or other qualified individual

– Methods to critically assess the response and conduct appropriate follow-up.

You must:

(2) Make your written emergency response plan available to employees, their representatives, and WISHA personnel for inspecting or copying.

Note: In situations where multiple employers could respond to an incident, all plans should consistently address:
- Who will be designated as the incident commander (IC)

AND
- If, when, and how transfer of the incident commander (IC) position will take place.

Table 1 Roles and Duties of Emergency Responders	
If the employee's role is:	**Then all the following apply. They:**
First responder at the awareness level	• Are likely to witness or discover a hazardous substance release • Are trained to initiate an emergency response by notifying the proper authorities of the release • Take no further action beyond notifying the authorities
First responder at the operations level	• Respond to actual or potential releases in order to protect nearby persons, property, and/or the environment from the effects of the release • Are trained to respond defensively, without trying to stop the release • May try to: - Confine the release from a safe distance - Keep it from spreading - Protect others from hazardous exposures
Hazardous materials technician	• Respond to releases or potential releases, with the intent of stopping the release • Are trained to approach the point of release offensively in order to, either: - Plug - Patch - Stop the release using other methods
Hazardous materials specialist	• Respond along with, and provide support to, hazardous materials technicians • Are required to have more specific knowledge of hazardous substances than a hazardous materials technician • Act as the site activity liaison when federal, state, local, and other government authorities participate
Incident commander	• Have ultimate responsibility for: - Direction - Control - Coordination of the response effort - Will assume control of the incident beyond the first responder awareness level
Specialist employee	• Are a technical, medical, environmental, or other type of expert • May represent a hazardous substance manufacturer, shipper, or a government agency • May be present at the scene or may assist from an off-site location • Regularly work with specific hazardous substances • Are trained in the hazards of specific substances • Are expected to give technical advice or assistance to the incident commander or incident safety officer, when requested
Skilled support personnel	• Are needed to perform an immediate, specific emergency support task at the site • Are skilled in the operation of equipment including: – Earth moving equipment – Cranes – Hoisting equipment
Incident safety officer	• Are designated by the incident commander • Are knowledgeable in operations being implemented at the site • Have specific responsibility to – Identify and evaluate hazards – Provide direction on employee safety matters

[Statutory Authority: RCW 49.17.010, 49.17.040, 49.17.050, 49.17.060. 05-01-166, § 296-307-70410, filed 12/21/04, effective 4/2/05.]

WAC 296-307-70415 Training. Train your employees

Note:
- Use Tables 3 through 6 to identify your employees' training competencies.
- You may conduct training internally, or use outside training services to comply with this section.
  - When outside trainers are hired, you are still responsible for making sure the requirements of this section are met. For example, employers may compare the course outline to the competencies listed in Tables 3 through 6.

You must:

• Make sure employees are appropriately trained for their assigned roles and duties as follows:

Exemption: Skilled support employees are not covered by the training requirements of this section (see WAC 296-307-70440).

Initial training:

• Provide initial training before the employee is allowed to participate in an actual emergency response operation.

Note: When first responders at the awareness or operations level have sufficient experience to objectively demonstrate competencies specified in Table 3, you may accept experience instead of training.

• Make sure initial training adequately addresses the competencies in Tables 3 through 6 and the minimum training durations in Table 2.

• Certify that employees objectively demonstrate competencies specified in Tables 3 through 6 (except for employees trained as first responders at the awareness level).

You must:

Retraining (refresher) training:

• Provide retraining annually.

• Make sure retraining covers necessary content.

• Document training or demonstrated competency.

Note: Retraining is not required when employees demonstrate competencies annually and a record is kept of the demonstration methodology used.

You must:

Trainer qualifications:

• Verify trainers have satisfactorily completed an instructors' training course for the subjects they teach. For example, courses offered by the United States National Academy, or equivalent courses are acceptable.

OR

• Have the educational and instructional experience necessary for training.

Specialist employees:

• Specialist employees who have been sent to the scene to advise or assist must receive training or demonstrate competency in their specialty, annually.

Table 2
Minimum Training Durations for all Responders

If you are a:	Then:
First responder at the awareness level	Training duration needs to be sufficient to provide the required competencies
First responder at the operations level	You need a minimum of 8 hours training (see Table 3)
Hazardous materials technician	You need a minimum of 24 hours training (see Table 4)
Hazardous materials specialist	You need a minimum of 24 hours training (see Table 4)
Incident commander	You need a minimum of 24 hours training (see Table 5)

Table 3
Competencies for First Responders at the Awareness Level and Operations Level

Employees must be able to show they:	When they are designated as First Responders at the:	
	Awareness Level	Operations Level
Understand what hazardous substances are and their associated risks.	X	X
Recognize the presence of hazardous substances in an emergency.	X	X
Can identify the hazardous substances, when possible.	X	X
Understand the potential consequences of hazardous substances in an emergency.	X	X
Understand the role of a first responder at the awareness level as described in: • The employer's emergency response plan, including site security and control. • The United States Department of Transportation's Emergency Response Guidebook. (*Search at: http://www.dot.gov.*)	X	X
Can use The United States Department of Transportation's Emergency Response Guidebook.	X	X
Recognize the need for additional resources and the need to notify the incident's communication center accordingly.	X	X
Know basic hazard and risk assessment techniques.		X
Can select and use personal protective equipment (PPE) appropriate for first responder operations level.		X
Understand basic hazardous materials terms.		X
Can perform basic control, containment, and/or confinement operations within the capabilities of the resources and PPE available.		X
Can implement decontamination procedures to their level of training.		X
Understand relevant standard operating and termination procedures.		X

Table 4
Competencies for Hazardous Materials Technicians and Hazardous Materials Specialist

Employees must be able to show they:	When they are designated as a Hazardous Materials:	
	Technician	Specialist
Have the competencies specified for the first responder operations level. (See Table 3)	X	X
Can implement an employer's emergency response plan.	X	X
Can function within their assigned role in the incident command system.	X	X

Table 4 Competencies for Hazardous Materials Technicians and Hazardous Materials Specialist		
Understand hazard and risk assessment techniques.	X	X
Understand basic chemical and toxicological terminology and behavior.	X	X
Can use field survey instruments and equipment to classify, identify, and verify materials at the incident.	X	X
Can select and use personal protective equipment (PPE) appropriate for hazardous materials technicians.	X	X
Can perform advance control, containment, and/or confinement operations within the capabilities of the resources and PPE available.	X	X
Can implement decontamination procedures to their level of training.	X	X
Understand termination procedures.	X	X
Can implement the local emergency response plan.		X
Know of the state emergency response plan.		X
Can develop a site safety and control plan.		X
Understand chemical, radiological, and toxicological terminology and behavior.		X
Understand in-depth hazard and risk techniques.		X
Can use advanced survey instruments and equipment to classify, identify and verify materials at the incident.		X
Can select and use proper specialized chemical PPE given to hazardous materials specialists.		X
Can perform specialized control, containment, and/or confinement operations within the capabilities of the resources and PPE available.		X
Can determine decontamination procedures.		X

Table 5 Competencies for Incident Commanders
Employees designated as Incident Commanders must be able to show they:
• Have competencies specified for the First Responder Operations Level. (See Table 3.)
• Know of the state emergency response plan and the Federal Regional Response Team.
• Can implement the local emergency response plan.
• Can implement the employer's emergency response plan.
• Have knowledge of the incident command system (ICS) and understand how they relate to it.
• Can implement the employer's ICS.
• Understand the hazards and risks associated with employees working in chemical protective clothing.
• Understand the importance of decontamination procedures.
Note: If the first employee arriving at the scene is not trained as an IC, they may take control of the incident within their designated role and training level.

Table 6 Competencies for Specialist Employees
Employees designated as Specialist Employees must be able to show they:
• Have current knowledge in their field regarding safety and health practices relating to the specific hazardous substances.
• Have the knowledge of the ICS and understand how they relate to it.
• Understand the care and use of personal protective equipment (PPE).

[Statutory Authority: RCW 49.17.010, 49.17.040, 49.17.050, 49.17.060. 05-01-166, § 296-307-70415, filed 12/21/04, effective 4/2/05.]

WAC 296-307-70420 Medical surveillance. Provide medical surveillance to employees.

You must:

(1) Provide medical surveillance for employees to comply with Tables 7 and 8, and the following:

• Make medical surveillance available at:

– Reasonable times and places.

– No cost to employees, including travel associated costs such as mileage, gas or bus fare if the employee is required to travel off site

AND

– Wages for additional time spent outside of employees' normal work hours.

• Make sure a licensed physician performs or supervises exams and procedures.

• Give complete information to the examining physician including:

– A copy of this section.

– A description of the employee's duties that relate to hazardous substance exposure.

– The hazardous substance exposure levels anticipated for the employee.

– A description of the personal protective equipment (PPE) the employee could use.

– Information available from previous medical examinations.

– The medical evaluation information required by chapter 296-307 WAC, Part Y-5, Respirators.

• Medical exams must include, at a minimum:

– A medical history.

– A work history (or updated history if on file).

– A special emphasis on:

■ Assessment of symptoms related to handling hazardous substances.

■ Health hazards.

■ Evaluation of fitness for duty (including the ability to wear any personal protective equipment (PPE) or other conditions that may be expected at the workplace).

– Other content as determined by the examining physician.

Note: The physician should consult the *Occupational Safety and Health Guidance Manual for Hazardous Waste Site Activities* and the *Medical Management Guidelines for Acute Chemical Exposure* (search OSHA website: http://www.osha.gov).

You must:

(2) Obtain the physician's written opinion and give a copy to the employee that includes:

• A statement of whether or not medical conditions were found which would increase the employee's risk for impairment during emergency response work or respirator use.

– Do not include specific findings or diagnoses unrelated to occupational exposures.

• Limitations recommended to the employee's assigned work, if any.

• Exam and test results if the employee requests this information.

• A statement that affirms the employee has been confidentially informed of medical exam results (including medical conditions requiring follow-up).

Table 7
Medical Surveillance for Employee Categories

If the employee is covered by this section and is:	Then you must:
• Exposed for at least 30 days a year to health hazards or hazardous substances at or above the permissible exposure limit or published exposure levels (even when respirators are used), **OR** • Required to wear a respirator for at least 30 days a year.*	• Offer standard medical surveillance as specified in Table 8.*
• A hazardous materials (HAZMAT) team member. • A hazardous materials specialist.	• Provide standard medical surveillance as specified in Table 8.
• An emergency responder who shows immediate or delayed signs or symptoms possibly resulting from exposure to hazardous substances during an incident.	• Provide incident-specific medical surveillance as specified in Table 8.
• Not an emergency responder and: – May be injured. – Shows immediate or delayed signs or symptoms possibly resulting from exposure to hazardous substances. – May have been exposed to hazardous substances at concentrations above the permissible exposure limits (PELs) or the published exposure levels without appropriate PPE.	• Offer incident-specific medical surveillance as specified in Table 8.

*Note: A medical evaluation for respirator use is required by chapter 296-307 WAC, Part Y-5, Respiratory protection, for those employees who have not been cleared for respirator use during medical surveillance activities.

Table 8
Frequency of Exams and Consultations

If the employee is covered by:	Then medical surveillance must include:
• Standard medical surveillance	Exams and consultations: • Before assignment. **Note:** If the employee is a hazardous materials (HAZMAT) team member or a hazardous materials specialist, the employee must receive a baseline physical examination. • At least once every 12 months after their initial assignment unless the physician believes a shorter, or longer interval (but no more than 24 months) is appropriate. • Whenever employees are reassigned to an area where they will no longer be covered by medical surveillance and they have not been examined within the past 6 months.

Table 8 Frequency of Exams and Consultations	
	• As soon as possible after an employee reports: – Signs or symptoms of possible overexposure to hazardous substances or health hazards. – Injury. – Exposure above the permissible exposure limits or published exposure levels. • At the termination of their employment unless they were examined within the past 6 months.
• Incident-specific medical surveillance	Medical consultations and exams: • As soon as possible following the incident or development of signs or symptoms. • At additional times, if the physician determines follow-up is medically necessary.

[Statutory Authority: RCW 49.17.010, 49.17.040, 49.17.050, 49.17.060. 05-01-166, § 296-307-70420, filed 12/21/04, effective 4/2/05.]

WAC 296-307-70425 Keep records.

You must:

• Keep a record of:

– Name and Social Security number of the employee receiving medical surveillance

– Physicians' written opinions, recommended limitations, and results of examinations and tests

– Any employee medical complaints regarding hazardous substance exposures

– A copy of all information given to the examining physician (except a copy of this section).

[Statutory Authority: RCW 49.17.010, 49.17.040, 49.17.050, 49.17.060. 05-01-166, § 296-307-70425, filed 12/21/04, effective 4/2/05.]

WAC 296-307-70430 Incident requirements. Recognize emergencies and initiate a response.

You must:

• Make sure employees follow procedures in your emergency response plan to:

– Recognize when an emergency response must be initiated

– Notify employees, and others designated in your plan, of the release

– Follow immediate emergency procedures

– Prevent the incident from increasing in severity or to secure the operation.

[Statutory Authority: RCW 49.17.010, 49.17.040, 49.17.050, 49.17.060. 05-01-166, § 296-307-70430, filed 12/21/04, effective 4/2/05.]

WAC 296-307-70435 Implement and maintain an incident command system (ICS).

You must:

(1) Make sure a single individual, acting as the incident commander (IC), is in charge of the site-specific incident command system (ICS) and acts within their designated role and training level.

Note:
- For multiemployer worksites:
  – The IC has responsibility for controlling emergency response operations at the site for all employers.
  – Emergency response plans should be consistent in designating who assumes the IC position.
- ■ If the first employee arriving at the scene is not trained as an IC (see Table 5, Training Requirements for Incident Commanders and Specialist Employees, WAC 296-307-70415), they may take control of the incident within their designated role and training level.

You must:

(2) Make sure all employers' emergency responders and their communications are coordinated and controlled by the IC.

Note: The IC may delegate tasks to subordinates (within their training level).

You must:

(3) Make sure each employer at the scene has designated a representative to assist the IC.

(4) Establish security and control of the site as specified in your written emergency response plan.

[Statutory Authority: RCW 49.17.010, 49.17.040, 49.17.050, 49.17.060. 05-01-166, § 296-307-70435, filed 12/21/04, effective 4/2/05.]

WAC 296-307-70440 Prepare skilled support personnel.

Note: The duties of skilled support personnel are described in Table 1, Roles and Duties of Emergency Responders.

You must:

(1) Make sure that your skilled support personnel (including those employees who are not regularly employed by you) who could be exposed to on-scene hazards are given an initial briefing at the site before they participate in any emergency response. The initial briefing must include:

• What chemical hazards are involved

• What duties are to be performed

• Instruction in the wearing of appropriate personal protective equipment.

Note: Skilled support personnel do not need to comply with the other training requirements of this section.

You must:

(2) Make sure the safety and health precautions given to your employees are also given to skilled support personnel.

[Statutory Authority: RCW 49.17.010, 49.17.040, 49.17.050, 49.17.060. 05-01-166, § 296-307-70440, filed 12/21/04, effective 4/2/05.]

WAC 296-307-70445 Make sure the incident commander oversees activities during the response. The employer of the incident commander (IC) must:

(1) Identify all hazardous substances and conditions present, within their training level, using site analysis and maximum exposure limits, when appropriate.

(2) Implement emergency response procedures appropriate to the hazardous substances and conditions present, such as:

• Procedures that address the use of engineering controls, hazardous substance handling, and new technologies

• Procedures that address decontamination

• Procedures that address PPE

• Procedures that limit the number of personnel to those who are actively performing emergency response operations, in areas where exposure could exist.

(3) Designate an incident safety officer (ISO).

• Make sure the ISO demonstrates knowledge about operations being implemented at the emergency response site. They must:

– Identify and evaluate hazards

– Communicate with the IC about hazards, immediately informing the IC of corrective actions that must be taken when conditions are judged to be:

■ An imminent danger

OR

■ Immediately dangerous to life or health (IDLH).

– Provide direction about the safety of operations.

[Statutory Authority: RCW 49.17.010, 49.17.040, 49.17.050, 49.17.060. 05-01-166, § 296-307-70445, filed 12/21/04, effective 4/2/05.]

WAC 296-307-70450 Use the buddy system in danger areas.

You must:

• Make sure operations and tasks (including limited actions) in danger areas are conducted using the buddy system in teams of two or more.

Definition:

Danger areas are areas where conditions pose a serious danger to employees, such as areas where:

• Immediately dangerous to life or health (IDLH) conditions could exist.

OR

• High levels of exposure to toxic substances could exist.

OR

• There is a potential for exceeding the lower explosive limit (LEL), also known as the lower flammability limit (LFL) of a hazardous substance.

[Statutory Authority: RCW 49.17.010, 49.17.040, 49.17.050, 49.17.060. 05-01-166, § 296-307-70450, filed 12/21/04, effective 4/2/05.]

WAC 296-307-70455 Provide rescue and medical assistance.

You must:

(1) Provide stand-by employees equipped with the same level of personal protective equipment (PPE) as the entrants, for assistance or rescue.

Note:
• The buddy system applies to stand-by employees (WAC 296-307-70450).
• One of the two stand-by employees can be assigned to another task provided it does not interfere with the performance of the stand-by role.
• Rescue equipment should be selected and provided based on the types of rescue situations that could occur.

You must:

(2) Make sure employees trained in first aid are readily available with necessary medical equipment and have a way to transport the injured.

Note:
• Employers who require their employees to provide first aid must comply with the bloodborne pathogen rule, chapter 296-823 WAC.

[Statutory Authority: RCW 49.17.010, 49.17.040, 49.17.050, 49.17.060. 05-01-166, § 296-307-70455, filed 12/21/04, effective 4/2/05.]

WAC 296-307-70460 Personal protective equipment.

Note:
• Only properly trained employees should select PPE. Hazardous materials technicians and hazardous materials specialists can select PPE within the competencies specified in Table 4.
• Selection requirements in other PPE rules also apply, including:
– Chapter 296-307 WAC, Part Y-5, Respirators.
– Chapter 296-305 WAC, Safety standards for fire fighting.

You must:

• Provide employees with appropriate PPE and make sure it is used if hazards could be present.

• Select PPE (such as respirators, gloves, protective suits and other PPE) based on:

– An evaluation of the performance characteristics (such as breakthrough time and hazardous substance-specificity of the material or item) relevant to the requirements and limitations of the site.

– Task-specific conditions and durations.

– The hazards and potential hazards of the site (see Table 9, Selecting PPE for Specific Hazards).

• Select totally encapsulating chemical protective (TECP) suits, as specified in Table 9, that:

– Maintain positive air pressure.

– Prevent inward test gas leakage of more than 0.5 percent.

Note: Follow the manufacturer's recommended procedure for testing a TECP suit's ability to maintain positive air pressure and prevent inward gas leakage. Other established test protocols for these suits, for example NFPA 1991 and ASTM F1052-97, may also be used.

Table 9
Selecting PPE for Specific Hazards

If:	Then use:
• Inhalation hazards could be present.	• Positive-pressure (pressure-demand) self-contained breathing apparatus (SCBA) **OR** • A decreased level of respiratory protection only when the incident commander determines, from air monitoring results, that employees will be adequately protected.

Chemical exposure levels will create a substantial possibility of: • Immediate death. • Immediate serious illness or injury. • Reduced ability to escape.	Either positive-pressure (pressure-demand): • SCBA • Air-line respirators equipped with an escape air supply.
Skin absorption of a hazardous substance may result in a substantial possibility of: • Immediate death. • Immediate serious illness or injury. • Reduced ability to escape.	Protection equivalent to Level A including a totally encapsulating chemical protective (TECP) suit.

[Statutory Authority: RCW 49.17.010, 49.17.040, 49.17.050, 49.17.060. 05-01-166, § 296-307-70460, filed 12/21/04, effective 4/2/05.]

WAC 296-307-70465 Control hazards created by personal protective equipment (PPE).

You must:

• Control hazards created by the use of PPE, including:

– Heat stress due to extremely high temperatures.

– Any other employee health hazard and consideration.

[Statutory Authority: RCW 49.17.010, 49.17.040, 49.17.050, 49.17.060. 05-01-166, § 296-307-70465, filed 12/21/04, effective 4/2/05.]

WAC 296-307-70470 Use personal protective equipment (PPE) properly.

You must:

(1) Make sure employees inspect PPE before, during and after use, following your plan's procedures.

(2) Make sure employees put on (don) and remove (doff) PPE following your plan's procedures.

(3) Make sure employees do not interchange self-contained breathing apparatus (SCBA) air cylinders from different manufacturers, unless all of the following apply:

• There is a life-saving emergency

• You need a supplemental air supply

• The cylinders are of the same capacity and pressure rating.

(4) Make sure compressed air cylinders used with SCBAs meet the testing and service life requirements of the United States Department of Transportation (USDOT). Search at: *http://www.dot.gov*.

Note: You can also check with the cylinder manufacturers to obtain USDOT test and service life specifications.

You must:

(5) Make sure PPE is maintained in a safe and reliable condition using your plan's procedures. PPE maintenance includes:

• Decontamination

• Cleaning

• Inspection

• Identification of damage or defects

• Parts repair or replacement

• Storage or disposal.

[Statutory Authority: RCW 49.17.010, 49.17.040, 49.17.050, 49.17.060. 05-01-166, § 296-307-70470, filed 12/21/04, effective 4/2/05.]

WAC 296-307-70475 Postemergency response.

IMPORTANT:

Postemergency response is the stage of the emergency response where the immediate threat from the release has been stabilized or eliminated, and cleanup of the site has started.

When cleanup is done by the employees who were part of the initial emergency response, the employees are not covered by this section (however, training, PPE and other requirements in WAC 296-307-70460 through 296-307-70470 apply to these employees).

You must:

(1) Follow Table 10 to determine which requirements apply to your postemergency response activities.

(2) Maintain clean-up equipment as specified in Table 10.

Table 10
Rules that Apply to Postemergency Response Activities

When postemergency response cleanup is performed by employees who were not part of the initial emergency response and:	**The following rules or requirements apply:**
It is necessary to remove hazardous substances, health hazards and contaminated materials (example: Soil) from the site.	Chapter 296-843 WAC, Hazardous waste operations.
Cleanup is done on plant property using plant or workplace employees **AND** It is not necessary to remove hazardous substances, health hazards and contaminated materials from the site.	For training: • WAC 296-307-35015 and 296-307-35018, Employee emergency action plans • Chapter 296-307 WAC, Part Y-5, Respiratory protection • WAC 296-307-550, Employer chemical hazard communication • Other appropriate training requirements relevant to personal protective equipment (PPE) and decontamination For equipment: • Make sure that all equipment used for clean-up work is serviced and inspected before use.

[Statutory Authority: RCW 49.17.010, 49.17.040, 49.17.050, 49.17.060. 05-01-166, § 296-307-70475, filed 12/21/04, effective 4/2/05.]

WAC 296-307-70480 Definitions. The following definitions are specific to this section:

Annually

Any twelve-month cycle.

Buddy system

A system of organizing employees (who enter or stand by danger areas) into work groups, so each employee can be observed by at least one other member of the group. The purpose of this system is to provide rapid assistance to employees in an emergency.

Clean-up operation(s)

An operation where hazardous substances are removed, contained, incinerated, neutralized, stabilized, cleared up or, in any other manner, processed or handled with the goal of making the site safer for people or the environment.

Danger area

Areas where conditions pose a serious danger to employees, such as areas where:

• Immediately dangerous to life or health (IDLH) conditions could exist

OR

• High levels of exposure to toxic substances could exist

OR

• There is a potential for exceeding the lower explosive limit (LEL), also known as the lower flammability limit (LFL), of a substance.

Decontamination

Removing hazardous substances from employees and their equipment so potential adverse health effects will not occur.

Emergency response

An organized response to an anticipated release of a hazardous substance that is, or could become, an uncontrolled release.

Emergency response plan

A written plan that requires coordination between emergency response participants, and contains procedures, criteria, and other information that will be applied to emergency response operations. Each employer's plan should be compatible with local and state plans.

Engineering controls

Methods of controlling employee exposures by modifying the source or reducing the quantity of contaminants.

Hazardous materials team (HAZMAT team)

A group of employees who are expected to perform responses to releases, or possible releases, of hazardous substances for the purpose of control and stabilization. As a result of their duties, HAZMAT team members may have close contact with hazardous substances.

Note: A HAZMAT team may be a separate component of a fire brigade or fire department.

Hazardous substance

Any of the following substances that could adversely affect an exposed employee's health or safety:

• Substances defined under section 101(14) of the Comprehensive Environmental Response, Compensation and Liability Act of 1980 (CERCLA) or "Superfund" Act (visit: *http://www.epa.gov*)

• Biological or other disease-causing agents released that could reasonably be expected to cause death, disease, behavioral abnormalities, cancer, genetic mutation, physiological malfunctions (including malfunctions in reproduction) or physical deformations in a person or their offspring when the person:

– Is directly exposed to the agent in the environment

– Directly ingests, inhales, or assimilates the agent from the environment

– Indirectly ingests the agent through a food chain

• Substances listed by the United States Department of Transportation as hazardous materials under Title 49 (Transportation) in the Code of Federal Regulations (CFR), Part 172, section 101 and appendices (visit: *http://www.nara.gov* and search for "List of CFR subjects")

• Hazardous wastes as defined in this section.

Hazardous waste

A substance designated by chapter 173-303 WAC, Dangerous waste regulations, department of ecology, as a dangerous waste or an extremely hazardous waste and any waste fitting the definition of "health hazard" in this section.

Note: For department of ecology regulations, visit: *http://www.ecy.wa.gov.*

Health hazard

A chemical, a mixture of chemicals, or a pathogen for which there is statistically significant evidence, based on at least one study conducted according to established scientific principles, that acute or chronic health effects may occur in exposed employees.

The term "health hazard" includes stress due to temperature extremes and chemicals that are:

• Carcinogens

• Toxic or highly toxic agents

• Reproductive toxins, irritants, corrosives, sensitizers, hepatotoxins, nephrotoxins, or neurotoxins

• Agents acting on the hematopoietic system agents that damage lungs, skin, eyes, or mucous membranes. (Detailed definitions of these chemical terms can be found in the Safety and health core rules, WAC 296-307-550, chemical hazard communication.)

Immediately dangerous to life or health (IDLH)

Any atmospheric condition that would:

• Cause an immediate threat to life

OR

• Cause permanent or delayed adverse health effects

OR

• Interfere with an employee's ability to escape.

Incident command system (ICS)

An organized approach to control and manage operations at an emergency response incident.

Incidental release

A release that can be safely controlled at the time of the release and does not have the potential to become an uncontrolled release.

Note: Example of a situation that results in an incidental release: A tanker truck is receiving a load of hazardous liquid when a leak occurs. The driver knows the only hazard from the liquid is minor skin irritation. The employer has trained the driver on procedures and provided equipment to use for a release of this quantity. The driver puts on skin protection and stops the leak. A spill kit is used to contain, absorb, and pick up the spilled material for disposal.

Limited action

Action necessary to:

• Secure an operation during emergency responses,

OR

• Prevent an incident from increasing in severity.

Examples include shutting down processes and closing emergency valves.

Lines of authority

A preestablished ranking of individuals, qualified to assume a commanding role during an emergency response, noted in an emergency response plan and implemented during a response. This is most important when responders from multiple employers could participate in an emergency response.

Lower explosive limit (LEL)

See lower flammable limit (LFL).

Lower flammable limit (LFL)

The lowest concentration of a material that will propagate a flame. The LFL is usually expressed as a percent (by volume) of the material in air (or other oxidant).

Must

Must means mandatory.

Permissible exposure limit (PEL)

Means the established time-weighted-average (TWA) concentration or ceiling concentration of a contaminant that must not be exceeded.

The exposure, inhalation, or dermal permissible limit specified in chapter 296-307 WAC, Part Y-6, Respiratory hazards.

Personal protective equipment (PPE)

Protective items designed to be worn by the user to protect them against airborne, skin contact and other hazards. This includes items such as respiratory protection, protective suits, gloves, eye protection, etc.

Postemergency response

The stage of the emergency response where the immediate threat from the release has been stabilized or eliminated, and cleanup of the site has started.

Published exposure level

Exposure limits published in "*National Institute for Occupational Safety and Health (NIOSH) Recommendations for Occupational Safety and Health*" (DHHS publication #92-100, 1992).

If an exposure limit is not published by NIOSH, then "published exposure level" means the exposure limits published by the American Conference of Governmental Industrial Hygienists (ACGIH) in "*TLVs and BEIs-Threshold Limit Values for Chemical Substances and Physical Agents*" (1999 edition).

Note: Additional exposure levels published by recognized organizations such as the American Industrial Hygiene Association are not required to be observed by this rule; however, they may be a useful resource when a hazardous substance is not covered by NIOSH and ACGIH publications.

Release

A spill, leak, or other type of hazardous substance discharge.

Uncontrolled release

A release where significant safety and health risks could be created. Releases of hazardous substances that are either incidental or could not create a safety or health hazard (i.e., fire, explosion or chemical exposure) are not considered to be uncontrolled releases.

Examples of conditions that could create a significant safety and health risk:

Large-quantity releases

Small releases that could be highly toxic

Airborne exposures that could exceed a WISHA permissible exposure limit or a published exposure limit and employees are not adequately trained or equipped to control the release.

Example of an uncontrolled release:

A forklift driver knocks over a container of a solvent-based liquid, releasing the contents onto the warehouse floor. The driver has been trained to recognize the vapor is flammable and moderately toxic when inhaled. The driver has not been trained or provided appropriate equipment to address this type of spill. In this situation, it is not safe for the driver to attempt a response. The driver needs to notify someone of the release so an emergency response can be initiated.

Workplace

• A fixed facility

OR

• A temporary location (such as a traffic corridor)

OR

• Locations where employees respond to emergencies.

[Statutory Authority: RCW 49.17.010, 49.17.040, 49.17.050, 49.17.060. 05-01-166, § 296-307-70480, filed 12/21/04, effective 4/2/05.]

Chapter 296-310 WAC
FARM LABOR CONTRACTING RULES

WAC

296-310-010	Definitions.
296-310-020	Application for initial and renewed licenses.
296-310-030	Denial of license.
296-310-040	Requirements for a license to transport employees.
296-310-050	Amount of bond or security.
296-310-060	Fees.
296-310-070	Duplicate licenses.
296-310-080	Length of license period.
296-310-090	Change in business structure, name, address, or number of employees.
296-310-100	Cancellation of insurance or bond.
296-310-110	Refund of security deposited with the department.
296-310-120	Revocation or suspension of license.
296-310-130	Submission of complaint.
296-310-140	Investigation of complaint.
296-310-150	Notice of violation.
296-310-160	Appeal of notices.
296-310-170	Hearing on appeal of notice.
296-310-180	Effect of final decision.
296-310-190	Suit by department for unpaid wages or damages.
296-310-200	Procedures for filing suit against a contractor.
296-310-210	Collection of judgments.
296-310-220	Priority for payment of judgments.
296-310-230	Civil penalties.
296-310-240	Adjustment of controversies.
296-310-250	Filing and service.
296-310-260	Liability of person who uses services of unlicensed contractor.
296-310-270	Inspection of records.

WAC 296-310-010 Definitions. For the purposes of this chapter:

(1) "Agricultural employee" means any person who renders personal services to, or under the direction of, an agricultural employer in connection with the employer's agricultural activity.

(2) "Agricultural employer" means any person engaged in agricultural activity, including the growing, producing, or harvesting of farm or nursery products, or engaged in the forestation or reforestation of lands, which includes but is not limited to the planting, transplanting, tubing, precommercial thinning, and thinning of trees and seedlings, the clearing, piling, and disposal of brush and slash, the harvest of Christmas trees, and other related activities.

(3) "Bonded contractor" means a contractor who obtained a surety bond in order to comply with RCW 19.30.030(5).

(4) "Contractor" means a farm labor contractor.

(5) "Department" means the department of labor and industries.

(6) "Director" means the director of the department of labor and industries.

(7) "Employee" means an agricultural employee.

(8) "Farm labor contractor" means any person, or his or her agent or subcontractor, who, for a fee, performs any farm labor contracting activity.

(9) "License" means a farm labor contractor license.

(10) "Secured contractor" means a contractor who assigned a savings account to, or deposited cash or other security with, the department in order to comply with RCW 19.30.030(5).

(11) "Security" means a savings account assigned to, or cash or other security deposited with, the department.

[Statutory Authority: RCW 19.30.130. 86-01-027 (Order 85-34), § 296-310-010, filed 12/11/85.]

WAC 296-310-020 Application for initial and renewed licenses. (1) To obtain a license, a contractor must:

(a) Complete an application for a license;

(b) Provide the information required by RCW 19.30.030 (1), (6), and (7);

(c) Obtain a surety bond or provide other acceptable security to the department. If the contractor obtains a bond, it must submit the original bond to the department;

(d) Obtain insurance and supply the information required by WAC 296-310-040(2) if the contractor seeks a license to transport workers; and

(e) Pay the fee set by WAC 296-310-060.

(2) The department shall send a renewal notice to the contractor's last recorded address at least forty-five days before the contractor's license expires. The contractor may renew its license if it submits the renewal notice and provides the materials required in subsection (1)(b), (c), (d) if appropriate, and (e) of this section.

(3) The contractor must submit all materials to the department in one package. Each of the materials must name the contractor exactly as it is named on the application for license or the renewal notice. If the contractor is renewing its license, each of the materials must include the contractor's license number. If any of the materials are missing, do not properly name the contractor, or do not include the license number, the department shall refuse to license or renew the license of the contractor.

(4) The bond and the insurance policy must expire no sooner than the expiration date of the license for which the contractor has applied.

(5) Applications for issuance or renewal of a license must be sent to:

Department of Labor and Industries
ESAC Division
General Administration Building
Olympia WA 98504

[Statutory Authority: RCW 19.30.130. 86-01-027 (Order 85-34), § 296-310-020, filed 12/11/85.]

WAC 296-310-030 Denial of license. (1) The department may refuse to issue or renew a license for the reasons listed in RCW 19.30.050 and 19.30.060. If the department refuses a license for any of these reasons, it shall serve on the contractor a notice of denial of license. The notice of denial of license shall:

(a) Describe concisely the ground for denial of the license; and

(b) Specify the statutory authority for the denial.

The notice of denial shall inform the contractor that it may request a hearing pursuant to WAC 296-310-160 on the denial. The notice shall specify that if no hearing is requested within thirty days of the date of issuance of the notice the director shall issue a final, unappealable order denying the license.

(2) The department also shall refuse to issue a license to or renew the license of a contractor who fails to comply with WAC 296-310-020. The department shall inform the contractor of the problem either in writing or, if appropriate, orally. Because compliance with WAC 296-310-020 involves technical requirements that are entirely within the control of the contractor, no hearing shall be granted on a failure to comply.

[Statutory Authority: RCW 19.30.130. 86-01-027 (Order 85-34), § 296-310-030, filed 12/11/85.]

WAC 296-310-040 Requirements for a license to transport employees. (1) A contractor who intends to transport employees must obtain liability insurance. The department shall require public liability and property damage insurance that provides coverage, for each single occurrence and for each vehicle used to transport employees, in the following minimum amounts:

(a) $50,000 for injury or damage to property;

(b) $100,000 for injury or damage, including death, to any one person; and

(c) $500,000 for injury or damage, including death, to more than one person.

(2) The contractor must also provide to the department evidence of the insurance policy or policies.

[Statutory Authority: RCW 19.30.130. 86-01-027 (Order 85-34), § 296-310-040, filed 12/11/85.]

WAC 296-310-050 Amount of bond or security. (1) A contractor must provide a bond or security in the following minimum amount:

(a) If the contractor employs or intends to employ:

(i)	From one to ten employees:	$ 5,000
(ii)	From eleven to fifty employees:	$10,000
(iii)	From fifty-one to one hundred employees:	$15,000
(iv)	Over one hundred employees:	$20,000

(b) If the contractor does not employ agricultural employees, but only recruits, solicits, supplies, transports, or hires employees for another person, and that person takes complete responsibility for payment of wages to the employees, the contractor shall obtain a $5,000 bond or other security.

(2) If the contractor obtains a two-year license, the bond or security shall be twice the minimum amounts stated in subsection (1) of this section.

(3) The department may order the contractor to obtain a bond or security for an amount greater than the minimums set by subsections (1) and (2) of this section if the security or bond is insufficient to satisfy the contractor's potential liability for the license period. If the department determines that an increased bond is necessary, it shall serve on the contractor a notice to increase bond or security. The notice shall:

(a) Describe concisely the reasons an increase in the bond or security is necessary;

(b) Specify the statutory authority for the required increase; and

(c) Grant the contractor thirty days from the date of issuance of the notice to obtain and provide to the department the increased bond or security.

The notice shall inform the contractor that it may request a hearing pursuant to WAC 296-310-160 on the order to increase the bond or security. The notice shall specify that if no hearing is requested within thirty days of the date of issuance of the notice the director shall issue a final, unappealable order requiring the contractor to submit the increased bond or security. The notice shall also specify that, if the contractor neither appeals nor obtains the increased bond or security within the thirty days, the department shall suspend the contractor's license.

(4) If the director issues a final, unappealed decision raising the amount of the bond or security, the raised amount shall be required for all license periods after the date of issuance of the final decision unless the decision specifically states otherwise. A contractor may, if the circumstances that led to the increased amount change, file with the department a written petition to lower the amount. The petition shall specify the grounds that justify a lowering of the bond or security. The department shall investigate the petition and shall issue a new notice stating its decision on the bond amount. The contractor, if aggrieved, may appeal this new notice as provided in subsection (3) of this section.

[Statutory Authority: RCW 19.30.130. 86-01-027 (Order 85-34), § 296-310-050, filed 12/11/85.]

WAC 296-310-060 Fees. (1) The fee for a one-year license is:

(a) For a contractor engaged in forestation or reforestation:	$100.00
(b) For all other contractors:	$ 35.00

(2) The fee for a two year license is:

(a) For a contractor engaged in forestation or reforestation:	$200.00
(b) For all other contractors:	$ 70.00

[Statutory Authority: RCW 19.30.130. 86-01-027 (Order 85-34), § 296-310-060, filed 12/11/85.]

WAC 296-310-070 Duplicate licenses. If a contractor loses its license, or if the license is stolen or destroyed, the contractor may obtain a duplicate license upon application to the department. The application must specify the reason a duplicate is necessary.

The duplicate license shall be stamped prominently with the word "duplicate." A new contractor license number shall be supplied to the contractor.

[Statutory Authority: RCW 19.30.130. 86-01-027 (Order 85-34), § 296-310-070, filed 12/11/85.]

WAC 296-310-080 Length of license period. A contractor who is obtaining its initial license shall be licensed for one year only. A contractor who is renewing its license may choose to obtain either a one-year or two-year license, unless the department informs the contractor that it may obtain only a one-year license.

All one-year licenses shall expire on December 31 of the year of issuance. All two-year licenses shall expire on December 31 of the year following the year of issuance.

[Statutory Authority: RCW 19.30.130. 86-01-027 (Order 85-34), § 296-310-080, filed 12/11/85.]

WAC 296-310-090 Change in business structure, name, address, or number of employees. (1) If a contractor changes its business structure (for example, if it changes from a partnership to a corporation, or if the partners in a partnership change), the contractor must apply for a new license in the manner required by WAC 296-310-020. If a contractor does not obtain a new license after a change in its business structure, its previous license may be invalid.

(2) If a contractor changes its name or address, it must notify the department within ten days.

(3) If a contractor begins employing agricultural employees, or increases the number of its employees, so that the bond or security is insufficient for that number of employees, the contractor must obtain a new bond or security in the amount required by WAC 296-310-050 and submit it to the department. The department need not issue a notice to increase the amount of bond or security in this situation.

[Statutory Authority: RCW 19.30.130. 86-01-027 (Order 85-34), § 296-310-090, filed 12/11/85.]

WAC 296-310-100 Cancellation of insurance or bond. (1) No surety company may cancel any bond issued to a contractor pursuant to RCW 19.30.040, unless the contractor previously submits another bond or other security, for the same amount, that covers the contractor's liability for the same period as that for the bond that is to be cancelled.

(2) A cancellation of a surety bond or insurance policy is effective thirty days after the department receives the cancellation notice, if the cancellation notice contains the following information:

(a) The name of the contractor, exactly as it appears on the contractor's license;

(b) The contractor's license number;

(c) The contractor's business address;

(d) The number of the bond or insurance policy that is to be cancelled;

(e) The effective date of the bond or insurance policy that is to be cancelled; and

(f) If the cancellation is of a surety bond, a certification that the contractor has previously obtained and submitted to the department a new bond or other security as required by subsection (1) of this section.

(3) To help the department process cancellations, the information in subsection (2) of this section should be provided in the order shown.

(4) The insurance and bonding companies should send cancellation notices to the department by certified or registered mail.

[Statutory Authority: RCW 19.30.130. 86-01-027 (Order 85-34), § 296-310-100, filed 12/11/85.]

WAC 296-310-110 Refund of security deposited with the department. (1) If a contractor is secured, the department shall release its interest in the security three years after the contractor's last license expired. The department shall not release its interest, however, if an unsatisfied judgment or claim is outstanding against the contractor.

(2) The department shall in any case release its interest in the security if the contractor provides a surety bond in the same amount that covers all of the periods in which the contractor was licensed for the previous three years, plus for the contractor's current license period if applicable.

[Statutory Authority: RCW 19.30.130. 86-01-027 (Order 85-34), § 296-310-110, filed 12/11/85.]

WAC 296-310-120 Revocation or suspension of license. (1) The department may revoke a contractor's license for the reasons listed in RCW 19.30.050(1) and 19.30.060. If the department revokes a license, it shall serve on the contractor a notice of revocation. The notice of revocation shall:

(a) Describe concisely the ground for the revocation; and

(b) Specify the statutory authority for the revocation.

The notice of revocation shall inform the contractor that it may request a hearing on the revocation. The notice shall specify that if no hearing is requested within thirty days after the date of issuance of the notice, the director shall issue a final, unappealable order revoking the contractor's license. The hearing may be requested pursuant to WAC 296-310-160.

(2) A contractor is entitled to retain its license only if it remains in compliance with the bonding and insurance requirements of RCW 19.30.030 and 19.30.040. If a contractor's surety bond or other security is impaired or becomes insufficient, the contractor's insurance policy is cancelled, or the contractor transports employees without insurance, the department shall suspend the contractor's license until the contractor obtains a new bond, other security, or insurance policy, eliminates the impairment to the bond or security, or ceases to transport workers. The contractor may not do business while its license is suspended.

The department shall inform the contractor in writing of the suspension and of the steps the contractor must take to remove the suspension. The contractor may not appeal a suspension of licensing.

[Statutory Authority: RCW 19.30.130. 86-01-027 (Order 85-34), § 296-310-120, filed 12/11/85.]

WAC 296-310-130 Submission of complaint. Any person may submit to the department a complaint alleging a violation of chapter 19.30 RCW or challenging an application for a license. The complaint must describe the alleged violation or ground for denying a license, and must identify the alleged violator or applicant. It would aid the department's investigation if the complaint also specifies:

(1) The name and address of the complainant; and

(2) The address of the alleged violator or applicant.

[Statutory Authority: RCW 19.30.130. 86-01-027 (Order 85-34), § 296-310-130, filed 12/11/85.]

WAC 296-310-140 Investigation of complaint. The department shall investigate a complaint unless the complaint was submitted more than three years after the date of the alleged violation. The department shall not investigate any complaint filed more than three years after the date of the violation.

[Statutory Authority: RCW 19.30.130. 86-01-027 (Order 85-34), § 296-310-140, filed 12/11/85.]

WAC 296-310-150 Notice of violation. (1) If the department determines that there is reasonable cause to believe that chapter 19.30 RCW has been violated, the department shall serve on the violator a notice of violation. The notice of violation shall:

(a) Describe concisely the violation;

(b) Specify which statute was violated;

(c) If known, identify the employees who were affected by the violation;

(d) If known and applicable, state the amount of unpaid wages or damages the violator owes;

(e) State the penalty, if any, the department will assess for the violation; and

(f) State whether the contractor's license is being revoked as a result of the violation.

(2) If the notice alleges that the contractor owes unpaid wages or damages, the department shall serve a copy of the notice of violation on the violator's surety bond company.

(3) The notice of violation shall inform the violator and, if applicable, its surety that they may request a hearing on the violation, the amount of unpaid wages or damages owed, or the penalty assessed. The notice shall specify that if no hearing is requested within thirty days after the date the notice was issued the director shall issue a final, unappealable order finding that the violation did occur, ordering the violator to pay any unpaid wages or damages, and assessing penalties.

[Statutory Authority: RCW 19.30.130. 86-01-027 (Order 85-34), § 296-310-150, filed 12/11/85.]

WAC 296-310-160 Appeal of notices. (1) The contractor or violator, or the violator's surety if the surety has an interest in the matter, may request a hearing on the matter

asserted in a notice of denial of license, a notice of revocation, a notice of increased bond amount, or a notice of violation. One original and four copies of the request must be filed with the director within thirty days after the date the department issued the notice. A party requesting a hearing on a notice of violation must also serve a copy of the request on the surety or the violator as appropriate.

(2) The request for hearing must be in writing and must specify:

(a) The name and address of the party requesting the hearing;

(b) The name and date of issuance of the notice that is being appealed;

(c) The matters contained in the notice that the requestor believes are erroneous;

(d) The reasons the notice is erroneous; and

(e) If a surety is appealing a notice of violation, the name and address of the violating contractor.

[Statutory Authority: RCW 19.30.130. 86-01-027 (Order 85-34), § 296-310-160, filed 12/11/85.]

WAC 296-310-170 Hearing on appeal of notice. (1) The director may hear an appeal personally or may delegate the authority to hold the hearing and draft a proposed decision to an administrative law judge pursuant to chapter 34.12 RCW. The plaintiff at the hearing shall be the department and the defendants shall be the contractor or the violator and its surety. The department shall have the burden of proving, by a preponderance of the evidence, that the matters stated in the notice occurred.

(2) Any person who has standing may, upon motion, be allowed to intervene as a plaintiff in a hearing on a notice of violation. Any interested person, whether or not admitted as a plaintiff, may submit written arguments and affidavits in any hearing.

(3) The hearing shall be conducted in accordance with the uniform procedure rules, chapter 1-08 WAC.

(4) If the director presides over the hearing, the director shall issue a final decision that includes findings of fact and conclusions of law and, if appropriate for a violation, an order to pay unpaid wages, damages, or a penalty.

(5) If an administrative law judge presides over the hearing, she or he shall issue a proposed decision that includes findings of fact and conclusions of law and, if appropriate for a violation, an order to pay unpaid wages, damages, or a penalty. The proposed decision shall be served on the contractor or the violator and its surety, the department, and any persons who have intervened as plaintiffs. Any of these parties, if aggrieved by the proposed decision, may appeal to the director within thirty days after the date of issuance of the proposed decision. If none of the parties appeals within thirty days, the proposed decision may not be appealed either to the director or the courts. A copy of the proposed decision shall also be mailed to all persons who submitted written arguments or affidavits at the hearing.

(6) An appellant must file with the director an original and four copies of its notice of appeal. The notice of appeal must specify which findings and conclusions are erroneous. The appellant must attach to the notice the written arguments supporting its appeal.

The appellant must serve a copy of the notice of appeal and the arguments on the other parties. The respondent parties must file with the director their written arguments within thirty days after the date the notice of appeal and the arguments were served upon them.

(7) The director shall review the proposed decision in accordance with the Administrative Procedure Act, chapter 34.04 RCW. The director may: Require the parties to specify the portions of the record on which the parties rely; require the parties to submit additional information by affidavit or certificate; remand the matter to the administrative law judge for further proceedings; and require a department employee to prepare a summary of the record for the department to review. The director may allow the parties to present oral arguments as well as the written arguments. The director shall issue a final decision that can affirm, modify, or reverse the proposed decision.

(8) The director shall serve the final decision on all parties. Any aggrieved party may appeal the final decision to superior court pursuant to RCW 34.04.130 unless the final decision affirms an unappealed proposed decision. If no party appeals within the period set by RCW 34.04.130, the director's decision is conclusive and binding on all parties. The director shall also mail a copy of the final decision to all persons who submitted written arguments or affidavits at the hearing.

[Statutory Authority: RCW 19.30.130. 86-01-027 (Order 85-34), § 296-310-170, filed 12/11/85.]

WAC 296-310-180 Effect of final decision. If the director issues a final decision that includes a finding that a violator owes unpaid wages or damages, and the finding is not appealed or is affirmed by the courts, the finding and the decision are res judicata in any action by the department, or by any other person who was a plaintiff at the hearing, against the violator and its surety to recover the unpaid wages or damages. The finding and decision are not res judicata in any action by a person who was not a party at the hearing.

[Statutory Authority: RCW 19.30.130. 86-01-027 (Order 85-34), § 296-310-180, filed 12/11/85.]

WAC 296-310-190 Suit by department for unpaid wages or damages. (1) RCW 19.30.160(4) authorizes the department to sue a violator and its surety on behalf of an employee to recover unpaid wages and other damages. The department is not required to bring suit and, in its sole discretion, may decide not to do so in any case. The department also shall not sue on behalf of any employee who has already brought a suit against the violator and its surety in the matter.

(2) The department may file a suit against the violator and its surety at any time and without regard to whether administrative proceedings have been exhausted.

(3) The department may include in any suit a request for an injunction against the violator.

[Statutory Authority: RCW 19.30.130. 86-01-027 (Order 85-34), § 296-310-190, filed 12/11/85.]

WAC 296-310-200 Procedures for filing suit against a contractor. (1) A suit against a contractor and its bond or security for unpaid wages or damages may be brought in any

court with jurisdiction. The venue may be in the county in which the claim arose, or in which either the damaged person or the defendant resides.

(2) When a contractor is sued, the plaintiff must serve the summons and complaint on the contractor and its surety by serving three copies of the summons and complaint by certified or registered mail on the department. The department shall not accept personal service of the summons and complaint.

(3) The department may be unable to process a summons and complaint if the summons and complaint do not contain the following information:

(a) The contractor's name exactly as it appears on the contractor's license;

(b) The contractor's business address;

(c) The names of the owners, partners, or officers of the contractor; and

(d) The contractor's license number.

If the suit names a surety as a defendant, the summons and complaint should also include:

(e) The name and address of the surety that issued the contractor's bond;

(f) The bond number; and

(g) The effective date of the bond.

If the information is insufficient for the department to identify the contractor or surety that is being sued, the department shall not attempt to serve the summons and complaint and shall return them to the plaintiff.

[Statutory Authority: RCW 19.30.130. 86-01-027 (Order 85-34), § 296-310-200, filed 12/11/85.]

WAC 296-310-210 Collection of judgments. (1) If a contractor is secured, a plaintiff who has received a final judgment against a contractor may satisfy the judgment out of the security held by the department.

(2) The department shall satisfy a final judgment if the plaintiff serves on the department three certified copies of the unsatisfied judgment. The plaintiff must include the following information with the copies of the judgment:

(a) The name of the contractor, exactly as it appears on the contractor's license;

(b) The contractor's business address;

(c) The names of the owners, partners, or officers of the contractor;

(d) The contractor's license number; and

(e) The exact amount of the judgment awarded by the court, including attorney's fees and interest.

If the department does not receive sufficient information to enable it to pay the judgment, it shall inform the plaintiff that more information is needed.

(3) If a contractor is bonded, a plaintiff can satisfy a final judgment only against the contractor or the bonding company. The department can neither satisfy the judgment nor, unless the department itself is the plaintiff, force the contractor or the bonding company to pay the judgment. The plaintiff must join the bonding company in the suit if it wants the bonding company to pay the judgment.

[Statutory Authority: RCW 19.30.130. 86-01-027 (Order 85-34), § 296-310-210, filed 12/11/85.]

WAC 296-310-220 Priority for payment of judgments. RCW 19.30.170 contains two different provisions for priority in paying judgments from the contractor's bond or security.

(1) If a contractor is secured, the department shall satisfy final judgments against the contractor in the order the department receives the judgments.

(2) If a contractor is bonded, claims for unpaid wages and benefits are satisfied first, claims for damages are satisfied second, and claims for costs and attorney's fees are satisfied last. No claim in a lesser category may be satisfied until all pending claims in the preceding categories are satisfied, unless the total amount of all pending claims in the preceding categories is less than the amount of the bond that remains unimpaired.

[Statutory Authority: RCW 19.30.130. 86-01-027 (Order 85-34), § 296-310-220, filed 12/11/85.]

WAC 296-310-230 Civil penalties. (1) In determining the amount of any civil penalty to be imposed under RCW 19.30.160 the department shall consider the following factors:

(a) Previous violations by the violator;

(b) The history of the violator in taking all necessary measures to prevent or correct violations;

(c) The magnitude and seriousness of the violation;

(d) The remedial purpose of chapter 19.30 RCW;

(e) Any mitigating circumstances; and

(f) Any other factors the department considers relevant.

(2) It is the violator's responsibility to inform the department of mitigating evidence.

(3) The penalties for acting as a contractor without a license, or for transporting employees without an endorsement to do so, are:

(a) Up to $500 for the first violation;

(b) Up to $750 for the second violation; and

(c) Up to $1000 for the third and any further violations.

[Statutory Authority: RCW 19.30.130. 86-01-027 (Order 85-34), § 296-310-230, filed 12/11/85.]

WAC 296-310-240 Adjustment of controversies. (1) Upon receipt of a complaint or on its own motion, the department shall attempt to adjust equitably a controversy between a contractor and its employees.

(2) No particular form of proceeding is necessary for resolving disputes. The supervisor of employment standards shall, in each case, use his or her best judgment in designing a procedure. However, in every case in which the supervisor determines that a hearing should be held, the supervisor shall notify the affected persons, or their representatives, of the time, date, place, and purpose of the hearing.

(3) A hearing shall be informal and shall not be subject to chapter 34.04 RCW. The supervisor's suggestions for resolution are advisory and not binding, and may not be appealed to any person or court.

(4) The director may delegate the resolution of any particular case to a person other than the supervisor of employment standards. That person shall have the same authority as the supervisor to determine the form of the proceeding.

[Statutory Authority: RCW 19.30.130. 86-01-027 (Order 85-34), § 296-310-240, filed 12/11/85.]

WAC 296-310-250 Filing and service. All papers required to be filed with the director under this chapter or chapter 19.30 RCW shall be addressed to Director, Department of Labor and Industries, General Administration Building, Olympia, WA 98504.

Filing and service may be made as provided in WAC 1-08-090 through 1-08-140.

[Statutory Authority: RCW 19.30.130. 86-01-027 (Order 85-34), § 296-310-250, filed 12/11/85.]

WAC 296-310-260 Liability of person who uses services of unlicensed contractor. (1) A person who knowingly uses the services of an unlicensed contractor is liable for unpaid wages, damages, and civil and criminal penalties to the same extent as the unlicensed contractor.

(2) Pursuant to RCW 19.30.200, a person may prove lack of knowledge by proving that she or he relied on a license issued by the department under chapter 19.30 RCW, or upon the department's representation that the contractor was licensed. The department shall not make oral representations that a contractor is or is not licensed. All representations by the department that a contractor is licensed shall be made in writing and shall be signed by the director or the employment standards supervisor or the assistant director. The department shall not accept reliance on a supposed oral representation as proof in any administrative enforcement proceeding.

[Statutory Authority: RCW 19.30.130. 86-01-027 (Order 85-34), § 296-310-260, filed 12/11/85.]

WAC 296-310-270 Inspection of records. A contractor or any person using a contractor's services shall allow a representative of the department to inspect at any reasonable time the records it is required to keep by chapter 19.30 RCW.

[Statutory Authority: RCW 19.30.130. 86-01-027 (Order 85-34), § 296-310-270, filed 12/11/85.]

Chapter 296-350 WAC
WISHA ADMINISTRATIVE RULES

WAC

296-350-010 Definitions.

VARIANCES FROM WISHA RULES

296-350-700 Variance from WISHA rules.
296-350-70010 Purpose of variances.
296-350-70015 Permanent variances—Description.
296-350-70020 Temporary variances—Description.
296-350-70025 Interim orders—Description and requesting.
296-350-70030 Requesting a permanent variance.
296-350-70035 Requesting a temporary variance.
296-350-70040 Renewing temporary variances.
296-350-70045 Submitting variance requests.
296-350-70050 Notifying employees about variance requests.
296-350-70055 Department review and decision.
296-350-70060 Your responsibilities once we make a decision.
296-350-70065 Changing a variance.
296-350-70070 Variance hearings.
296-350-990 Appendix A—Form F418-023-000—Application for copies of citations and notices.

DISPOSITION OF SECTIONS FORMERLY CODIFIED IN THIS CHAPTER

296-350-020 Reassumption of jurisdiction—Purpose. [Order 75-14, § 296-350-020, filed 4/14/75; Order 74-21, § 296-350-020, filed 5/6/74.] Repealed by 00-11-098, filed 5/17/00, effective 8/1/00. Statutory Authority: RCW 49.17.010, [49.17].040, and [49.17].050.

296-350-030 Notice of appeal—Filing and service. [Statutory Authority: Chapter 49.17 RCW. 94-15-096 (Order 94-07), § 296-350-030, filed 7/20/94, effective 9/20/94; 90-09-026 (Order 90-01), § 296-350-030, filed 4/10/90, effective 5/25/90. Statutory Authority: RCW 49.17.040, 49.17.050, 49.17.240, chapters 42.30 and 43.22 RCW. 80-17-014 (Order 80-20), § 296-350-030, filed 11/13/80; Order 75-14, § 296-350-030, filed 4/14/75; Order 74-21, § 296-350-030, filed 5/6/74.] Repealed by 00-11-098, filed 5/17/00, effective 8/1/00. Statutory Authority: RCW 49.17.010, [49.17].040, and [49.17].050.

296-350-040 Notice of appeal—Contents. [Statutory Authority: Chapter 49.17 RCW. 94-15-096 (Order 94-07), § 296-350-040, filed 7/20/94, effective 9/20/94; Order 75-14, § 296-350-040, filed 4/14/75; Order 74-21, § 296-350-040, filed 5/6/74.] Repealed by 00-11-098, filed 5/17/00, effective 8/1/00. Statutory Authority: RCW 49.17.010, [49.17].040, and [49.17].050.

296-350-050 Reassumption of jurisdiction—Time—Notice of reassumption of jurisdiction and informal conference. [Statutory Authority: Chapter 49.17 RCW. 94-15-096 (Order 94-07), § 296-350-050, filed 7/20/94, effective 9/20/94. Statutory Authority: RCW 49.17.040 and 49.17.050. 86-16-008 (Order 86-27), § 296-350-050, filed 7/25/86; Order 76-6, § 296-350-050, filed 3/1/76; Order 75-14, § 296-350-350 (codified as WAC 296-350-050), filed 4/14/75; Order 74-21, § 296-350-050, filed 5/6/74.] Repealed by 00-11-098, filed 5/17/00, effective 8/1/00. Statutory Authority: RCW 49.17.010, [49.17].040, and [49.17].050.

296-350-060 Notices of reassumption of jurisdiction and informal conferences—Service—Posting record. [Order 75-14, § 296-350-060, filed 4/14/75; Order 74-21, § 296-350-060, filed 5/6/74.] Repealed by 00-11-098, filed 5/17/00, effective 8/1/00. Statutory Authority: RCW 49.17.010, [49.17].040, and [49.17].050.

296-350-070 Reassumption of jurisdiction—Informal conferences—Procedure—Evidence. [Statutory Authority: Chapter 49.17 RCW. 94-15-096 (Order 94-07), § 296-350-070, filed 7/20/94, effective 9/20/94; Order 75-14, § 296-350-070, filed 4/14/75; Order 74-21, § 296-350-070, filed 5/6/74.] Repealed by 00-11-098, filed 5/17/00, effective 8/1/00. Statutory Authority: RCW 49.17.010, [49.17].040, and [49.17].050.

296-350-080 Reassumption of jurisdiction—Final determination—Mailing. [Statutory Authority: RCW 49.17.040 and 49.17.050. 86-16-008 (Order 86-27), § 296-350-080, filed 7/25/86; 82-13-045 (Order 82-22), § 296-350-080, filed 6/11/82; Order 76-6, § 296-350-080, filed 3/1/76; Order 75-14, § 296-350-080, filed 4/14/75; Order 74-21, § 296-350-080, filed 5/6/74.] Repealed by 00-11-098, filed 5/17/00, effective 8/1/00. Statutory Authority: RCW 49.17.010, [49.17].040, and [49.17].050.

296-350-090 Reassumption of jurisdiction—Statement of redetermination—Appeal. [Order 75-14, § 296-350-090, filed 4/14/75; Order 74-21, § 296-350-090, filed 5/6/74.] Repealed by 00-11-098, filed 5/17/00, effective 8/1/00. Statutory Authority: RCW 49.17.010, [49.17].040, and [49.17].050.

296-350-095 Settlement agreements. [Statutory Authority: RCW 49.17.040 and 49.17.050. 82-13-045 (Order 82-22), § 296-350-095, filed 6/11/82.] Repealed by 00-11-098, filed 5/17/00, effective 8/1/00. Statutory Authority: RCW 49.17.010, [49.17].040, and [49.17].050.

296-350-100 Inspections and citations. [Statutory Authority: RCW 49.17.010, [49.17].040, and [49.17].050. 00-11-098, § 296-350-100, filed 5/17/00, effective 8/1/00.] Repealed by 01-11-038, filed 5/9/01, effective 9/1/01. Statutory Authority: RCW 49.17.010, [49.17].040, and [49.17].050.

296-350-10010 Selecting workplaces to inspect. [Statutory Authority: RCW 49.17.010, [49.17].040, and [49.17].050. 00-11-098, § 296-350-10010, filed 5/17/00, effective 8/1/00.] Repealed by 01-11-038, filed 5/9/01, effective 9/1/01. Statutory Authority: RCW 49.17.010, [49.17].040, and [49.17].050.

296-350-10020 Inspections—Site visit. [Statutory Authority: RCW 49.17.010, [49.17].040, and [49.17].050. 00-11-098, § 296-350-10020, filed 5/17/00, effective 8/1/00.] Repealed by 01-11-038, filed 5/9/01, effective 9/1/01. Statutory Authority: RCW 49.17.010, [49.17].040, and [49.17].050.

296-350-10030 Complaints by employees or employee representatives. [Statutory Authority: RCW 49.17.010, [49.17].040, and [49.17].050. 00-11-098, § 296-350-10030, filed 5/17/00, effective 8/1/00.] Repealed by 01-11-038, filed 5/9/01, effective 9/1/01. Statutory Authority: RCW 49.17.010, [49.17].040, and [49.17].050.

296-350-10040 Results of a WISHA inspection—Notice of violations. [Statutory Authority: RCW 49.17.010, [49.17].040, and [49.17].050. 00-11-098, § 296-350-10040, filed 5/17/00, effective 8/1/00.] Repealed by 01-11-038, filed 5/9/01, effective 9/1/01. Statutory Authority: RCW 49.17.010, [49.17].040, and [49.17].050.

296-350-10050 Posting a citation and notice. [Statutory Authority: RCW 49.17.010, [49.17].040, and [49.17].050. 00-11-098, § 296-350-10050, filed 5/17/00, effective 8/1/00.] Repealed by 01-11-038, filed 5/9/01, effective 9/1/01. Statutory Authority: RCW 49.17.010, [49.17].040, and [49.17].050.

296-350-150 Civil penalties. [Statutory Authority: RCW 49.17.010, [49.17].040, and [49.17].050. 00-11-098, § 296-350-150, filed 5/17/00, effective 8/1/00.] Repealed by 01-11-038, filed 5/9/01, effective 9/1/01. Statutory Authority: RCW 49.17.010, [49.17].040, and [49.17].050.

296-350-15010 Assessing civil penalties—Purpose. [Statutory Authority: RCW 49.17.010, [49.17].040, and [49.17].050. 00-11-098, § 296-350-15010, filed 5/17/00, effective 8/1/00.] Repealed by 01-11-038, filed 5/9/01, effective 9/1/01. Statutory Authority: RCW 49.17.010, [49.17].040, and [49.17].050.

296-350-15015 Minimum penalty amounts. [Statutory Authority: RCW 49.17.010, [49.17].040, and [49.17].050. 00-11-098, § 296-350-15015, filed 5/17/00, effective 8/1/00.] Repealed by 01-11-038, filed 5/9/01, effective 9/1/01. Statutory Authority: RCW 49.17.010, [49.17].040, and [49.17].050.

296-350-15020 Severity and probability determine base penalties. [Statutory Authority: RCW 49.17.010, [49.17].040, and [49.17].050. 00-11-098, § 296-350-15020, filed 5/17/00, effective 8/1/00.] Repealed by 01-11-038, filed 5/9/01, effective 9/1/01. Statutory Authority: RCW 49.17.010, [49.17].040, and [49.17].050.

296-350-15025 Severity. [Statutory Authority: RCW 49.17.010, [49.17].040, and [49.17].050. 00-11-098, § 296-350-15025, filed 5/17/00, effective 8/1/00.] Repealed by 01-11-038, filed 5/9/01, effective 9/1/01. Statutory Authority: RCW 49.17.010, [49.17].040, and [49.17].050.

296-350-15030 Probability. [Statutory Authority: RCW 49.17.010, [49.17].040, and [49.17].050. 00-11-098, § 296-350-15030, filed 5/17/00, effective 8/1/00.] Repealed by 01-11-038, filed 5/9/01, effective 9/1/01. Statutory Authority: RCW 49.17.010, [49.17].040, and [49.17].050.

296-350-15035 Gravity and base penalties. [Statutory Authority: RCW 49.17.010, [49.17].040, and [49.17].050. 00-11-098, § 296-350-15035, filed 5/17/00, effective 8/1/00.] Repealed by 01-11-038, filed 5/9/01, effective 9/1/01. Statutory Authority: RCW 49.17.010, [49.17].040, and [49.17].050.

296-350-15040 Adjustments to base penalties. [Statutory Authority: RCW 49.17.010, [49.17].040, and [49.17].050. 00-11-098, § 296-350-15040, filed 5/17/00, effective 8/1/00.] Repealed by 01-11-038, filed 5/9/01, effective 9/1/01. Statutory Authority: RCW 49.17.010, [49.17].040, and [49.17].050.

296-350-15045 Increasing penalty amounts. [Statutory Authority: RCW 49.17.010, [49.17].040, and [49.17].050. 00-11-098, § 296-350-15045, filed 5/17/00, effective 8/1/00.] Repealed by 01-11-038, filed 5/9/01, effective 9/1/01. Statutory Authority: RCW 49.17.010, [49.17].040, and [49.17].050.

296-350-200 Variances—Foreword. [Statutory Authority: Chapter 49.17 RCW. 94-15-096 (Order 94-07), § 296-350-200, filed 7/20/94, effective 9/20/94; Order 75-14, § 296-350-200, filed 4/14/75.] Repealed by 00-11-098, filed 5/17/00, effective 8/1/00. Statutory Authority: RCW 49.17.010, [49.17].040, and [49.17].050.

296-350-210 Types of orders granting a variance. [Statutory Authority: Chapter 49.17 RCW. 94-15-096 (Order 94-07), § 296-350-210, filed 7/20/94, effective 9/20/94; Order 75-14, § 296-350-210, filed 4/14/75.] Repealed by 00-11-098, filed 5/17/00, effective 8/1/00. Statutory Authority: RCW 49.17.010, [49.17].040, and [49.17].050.

296-350-230 Effect of variances. [Statutory Authority: Chapter 49.17 RCW. 94-15-096 (Order 94-07), § 296-350-230, filed 7/20/94, effective 9/20/94; Order 75-14, § 296-350-230, filed 4/14/75.] Repealed by 00-11-098, filed 5/17/00, effective 8/1/00. Statutory Authority: RCW 49.17.010, [49.17].040, and [49.17].050.

296-350-240 Variance applications—Form of documents—Subscription. [Statutory Authority: Chapter 49.17 RCW. 94-15-096 (Order 94-07), § 296-350-240, filed 7/20/94, effective 9/20/94; Order 75-14, § 296-350-240, filed 4/14/75.] Repealed by 00-11-098, filed 5/17/00, effective 8/1/00. Statutory Authority: RCW 49.17.010, [49.17].040, and [49.17].050.

296-350-250 Order granting a temporary variance—Application. [Statutory Authority: Chapter 49.17 RCW. 94-15-096 (Order 94-07), § 296-350-250, filed 7/20/94, effective 9/20/94; Order 75-14, § 296-350-250, filed 4/14/75.] Repealed by 00-11-098, filed 5/17/00, effective 8/1/00. Statutory Authority: RCW 49.17.010, [49.17].040, and [49.17].050.

296-350-255 Order granting a permanent variance—Application. [Statutory Authority: Chapter 49.17 RCW. 94-15-096 (Order 94-07), § 296-350-255, filed 7/20/94, effective 9/20/94. Statutory Authority: RCW 49.17.040, 49.17.050, 49.17.240, chapters 42.30 and 43.22 RCW. 80-17-014 (Order 80-20), § 296-350-255, filed 11/13/80; Order 75-14, § 296-350-255, filed 4/14/75.] Repealed by 00-11-098, filed 5/17/00, effective 8/1/00. Statutory Authority: RCW 49.17.010, [49.17].040, and [49.17].050.

296-350-260 Interim order—Application—Notice of grant. [Statutory Authority: Chapter 49.17 RCW. 94-15-096 (Order 94-07), § 296-350-260, filed 7/20/94, effective 9/20/94; Order 75-14, § 296-350-260, filed 4/14/75.] Repealed by 00-11-098, filed 5/17/00, effective 8/1/00. Statutory Authority: RCW 49.17.010, [49.17].040, and [49.17].050.

296-350-270 Notice of denial of application for variance. [Order 75-14, § 296-350-270, filed 4/14/75.] Repealed by 00-11-098, filed 5/17/00, effective 8/1/00. Statutory Authority: RCW 49.17.010, [49.17].040, and [49.17].050.

296-350-280 Hearings on applications for variances—Temporary and permanent. [Statutory Authority: Chapter 49.17 RCW. 94-15-096 (Order 94-07), § 296-350-280, filed 7/20/94, effective 9/20/94. Statutory Authority: RCW 49.17.040, 49.17.050, 49.17.240, chapters 42.30 and 43.22 RCW. 80-17-014 (Order 80-20), § 296-350-280, filed 11/13/80; Order 75-14, § 296-350-280, filed 4/14/75.] Repealed by 00-11-098, filed 5/17/00, effective 8/1/00. Statutory Authority: RCW 49.17.010, [49.17].040, and [49.17].050.

296-350-300 Repeat violations. [Statutory Authority: RCW 49.17.040 and 49.17.050. 86-06-002 (Order 86-17), § 296-350-300, filed 2/20/86.] Repealed by 91-24-017 (Order 91-07), filed 11/22/91, effective 12/24/91. Statutory Authority: Chapter 49.17 RCW.

296-350-350 Extension of abatement date(s)—Application—Authority. [Statutory Authority: Chapter 49.17 RCW. 94-15-096 (Order 94-07), § 296-350-350, filed 7/20/94, effective 9/20/94; Order 75-14, § 296-350-350, filed 4/14/75.] Repealed by 01-11-038, filed 5/9/01, effective 9/1/01. Statutory Authority: RCW 49.17.010, [49.17].040, and [49.17].050.

296-350-35010 Application for extension of abatement date(s). [Statutory Authority: Chapter 49.17 RCW. 94-15-096 (Order 94-07), § 296-350-35010, filed 7/20/94, effective 9/20/94. Statutory Authority: RCW 49.17.040, 49.17.050, 49.17.240, chapters 42.30 and 43.22 RCW. 80-17-014 (Order 80-20), § 296-350-35010, filed 11/13/80; Order 76-29, § 296-350-35010, filed 9/30/76; Order 75-14, § 296-350-35010, filed 4/14/75.] Repealed by 01-11-038, filed 5/9/01, effective 9/1/01. Statutory Authority: RCW 49.17.010, [49.17].040, and [49.17].050.

296-350-35015 Extension of abatement date(s)—Application—Timeliness. [Order 76-29, § 296-350-35015, filed 9/30/76; Order 75-14, § 296-350-35015, filed 4/14/75.] Repealed by 01-11-038, filed 5/9/01, effective 9/1/01. Statutory Authority: RCW 49.17.010, [49.17].040, and [49.17].050.

296-350-35020 Extension of abatement date(s)—Application—Service. [Order 75-14, § 296-350-35020, filed 4/14/75.] Repealed by 01-11-038, filed 5/9/01, effective 9/1/01. Statutory Authority: RCW 49.17.010, [49.17].040, and [49.17].050.

296-350-35025 Extension of abatement date(s)—Application—Contents. [Order 75-14, § 296-350-35025, filed 4/14/75.]

Repealed by 01-11-038, filed 5/9/01, effective 9/1/01. Statutory Authority: RCW 49.17.010, [49.17].040, and [49.17].050.

296-350-35030 Extension of abatement date(s)—Provisional determination. [Statutory Authority: RCW 49.17.040, 49.17.050, 49.17.240, chapters 42.30 and 43.22 RCW. 80-17-014 (Order 80-20), § 296-350-35030, filed 11/13/80; Order 75-14, § 296-350-35030, filed 4/14/75.] Repealed by 01-11-038, filed 5/9/01, effective 9/1/01. Statutory Authority: RCW 49.17.010, [49.17].040, and [49.17].050.

296-350-35035 Extension of abatement date(s)—Notice of application—Notice of opportunity for hearing—Notice of provisional determination. [Statutory Authority: RCW 49.17.040, 49.17.050, 49.17.240, chapters 42.30 and 43.22 RCW. 80-17-014 (Order 80-20), § 296-350-35035, filed 11/13/80; Order 75-14, § 296-350-35035, filed 4/14/75.] Repealed by 01-11-038, filed 5/9/01, effective 9/1/01. Statutory Authority: RCW 49.17.010, [49.17].040, and [49.17].050.

296-350-35040 Extension of abatement date(s)—Posting. [Order 75-14, § 296-350-35040, filed 4/14/75.] Repealed by 01-11-038, filed 5/9/01, effective 9/1/01. Statutory Authority: RCW 49.17.010, [49.17].040, and [49.17].050.

296-350-35045 Extension of abatement date(s)—Application for hearing. [Statutory Authority: RCW 49.17.040, 49.17.050, 49.17.240, chapters 42.30 and 43.22 RCW. 80-17-014 (Order 80-20), § 296-350-35045, filed 11/13/80; Order 75-14, § 296-350-35045, filed 4/14/75.] Repealed by 01-11-038, filed 5/9/01, effective 9/1/01. Statutory Authority: RCW 49.17.010, [49.17].040, and [49.17].-050.

296-350-35050 Extension of abatement date(s)—Notice of hearing. [Statutory Authority: RCW 49.17.040, 49.17.050, 49.17.240, chapters 42.30 and 43.22 RCW. 80-17-014 (Order 80-20), § 296-350-35050, filed 11/13/80; Order 75-14, § 296-350-35050, filed 4/14/75.] Repealed by 01-11-038, filed 5/9/01, effective 9/1/01. Statutory Authority: RCW 49.17.010, [49.17].040, and [49.17].-050.

296-350-35055 Extension of abatement date(s)—Hearings. [Statutory Authority: Chapter 49.17 RCW. 94-15-096 (Order 94-07), § 296-350-35055, filed 7/20/94, effective 9/20/94. Statutory Authority: RCW 49.17.040 and 49.17.050. 82-13-045 (Order 82-22), § 296-350-35055, filed 6/11/82. Statutory Authority: RCW 49.17.040, 49.17.050, 49.17.240, chapters 42.30 and 43.22 RCW. 80-17-014 (Order 80-20), § 296-350-35055, filed 11/13/80; Order 75-14, § 296-350-35055, filed 4/14/75.] Repealed by 01-11-038, filed 5/9/01, effective 9/1/01. Statutory Authority: RCW 49.17.010, [49.17].-040, and [49.17].050.

296-350-35060 Extension of abatement date(s)—Decision and order. [Statutory Authority: RCW 49.17.040, 49.17.050, 49.17.240, chapters 42.30 and 43.22 RCW. 80-17-014 (Order 80-20), § 296-350-35060, filed 11/13/80; Order 75-14, § 296-350-35060, filed 4/14/75.] Repealed by 01-11-038, filed 5/9/01, effective 9/1/01. Statutory Authority: RCW 49.17.010, [49.17].040, and [49.17].-050.

296-350-400 Posting of notices—Posting of citation and notice—Availability of act and applicable standards. [Statutory Authority: Chapter 49.17 RCW. 94-15-096 (Order 94-07), § 296-350-400, filed 7/20/94, effective 9/20/94; 91-24-017 (Order 91-07), § 296-350-400, filed 11/22/91, effective 12/24/91. Statutory Authority: RCW 49.17.040 and 49.17.050. 86-03-064 (Order 86-02), § 296-350-400, filed 1/17/86; 82-13-045 (Order 82-22), § 296-350-400, filed 6/11/82; Order 75-14, § 296-350-400, filed 4/14/75. Formerly WAC 296-27-200.] Repealed by 00-11-098, filed 5/17/00, effective 8/1/00. Statutory Authority: RCW 49.17.010, [49.17].040, and [49.17].050.

296-350-450 Complaints by employees or their representatives. [Statutory Authority: Chapter 49.17 RCW. 94-15-096 (Order 94-07), § 296-350-450, filed 7/20/94, effective 9/20/94; Order 75-14, § 296-350-450, filed 4/14/75.] Repealed by 00-11-098, filed 5/17/00, effective 8/1/00. Statutory Authority: RCW 49.17.010, [49.17].040, and [49.17].050.

296-350-460 Complaints—Inspection not warranted—Informal review. [Statutory Authority: Chapter 49.17 RCW. 94-15-096 (Order 94-07), § 296-350-460, filed 7/20/94, effective 9/20/94. Statutory Authority: RCW 49.17.040, 49.17.050, 49.17.240, chapters 42.30 and 43.22 RCW. 80-17-014 (Order 80-20, § 296-350-460, filed 11/13/80; Order 75-41, § 296-350-460, filed 12/19/75; Order 75-14, § 296-350-460, filed 4/14/75.] Repealed by 00-11-098, filed 5/17/00, effective 8/1/00. Statutory Authority: RCW 49.17.010, [49.17].040, and [49.17].050.

296-350-470 Citation not issued following complaint. [Statutory Authority: Chapter 49.17 RCW. 94-15-096 (Order 94-07), § 296-350-470, filed 7/20/94, effective 9/20/94. Statutory Authority: RCW 49.17.040, 49.17.050, 49.17.240, chapters 42.30 and 43.22 RCW. 80-17-014 (Order 80-20), § 296-350-470, filed 11/13/80; Order 75-14, § 296-350-470, filed 4/14/75.] Repealed by 00-11-098, filed 5/17/00, effective 8/1/00. Statutory Authority: RCW 49.17.010, [49.17].040, and [49.17].050.

296-350-500 Citation and notice—Copy to employee representative. [Statutory Authority: Chapter 49.17 RCW. 94-15-096 (Order 94-07), § 296-350-500, filed 7/20/94, effective 9/20/94; 87-24-051 (Order 87-24), § 296-350-500, filed 11/30/87. Statutory Authority: RCW 49.17.040, 49.17.050, 49.17.240, chapters 42.30 and 43.22 RCW. 80-17-014 (Order 80-20), § 296-350-500, filed 11/13/80; Order 75-14, § 296-350-500, filed 4/14/75.] Repealed by 01-11-038, filed 5/9/01, effective 9/1/01. Statutory Authority: RCW 49.17.010, [49.17].040, and [49.17].050.

296-350-600 WISHA appeals. [Statutory Authority: RCW 49.17.-010, [49.17].040, and [49.17].050. 00-11-098, § 296-350-600, filed 5/17/00, effective 8/1/00.] Repealed by 01-11-038, filed 5/9/01, effective 9/1/01. Statutory Authority: RCW 49.17.010, [49.17].040, and [49.17].-050.

296-350-60010 Filing an appeal—Who, when and where. [Statutory Authority: RCW 49.17.010, [49.17].040, and [49.17].-050. 00-11-098, § 296-350-60010, filed 5/17/00, effective 8/1/00.] Repealed by 01-11-038, filed 5/9/01, effective 9/1/01. Statutory Authority: RCW 49.17.010, [49.17].040, and [49.17].050.

296-350-60015 What must be in a WISHA appeal. [Statutory Authority: RCW 49.17.010, [49.17].040, and [49.17].050. 00-11-098, § 296-350-60015, filed 5/17/00, effective 8/1/00.] Repealed by 01-11-038, filed 5/9/01, effective 9/1/01. Statutory Authority: RCW 49.17.010, [49.17].040, and [49.17].050.

296-350-60020 Why we reassume jurisdiction. [Statutory Authority: RCW 49.17.010, [49.17].040, and [49.17].050. 00-11-098, § 296-350-60020, filed 5/17/00, effective 8/1/00.] Repealed by 01-11-038, filed 5/9/01, effective 9/1/01. Statutory Authority: RCW 49.17.010, [49.17].040, and [49.17].050.

296-350-60025 Reassuming jurisdiction or forwarding an appeal to the board. [Statutory Authority: RCW 49.17.010, [49.17].040, and [49.17].050. 00-11-098, § 296-350-60025, filed 5/17/00, effective 8/1/00.] Repealed by 01-17-033, filed 8/8/01, effective 9/1/01. Statutory Authority: RCW 49.17.010, [49.17].040, and [49.17].050.

296-350-60030 Reviewing appeals and extending review time. [Statutory Authority: RCW 49.17.010, [49.17].040, and [49.17].050. 00-11-098, § 296-350-60030, filed 5/17/00, effective 8/1/00.] Repealed by 01-11-038, filed 5/9/01, effective 9/1/01. Statutory Authority: RCW 49.17.010, [49.17].040, and [49.17].050.

296-350-60035 Informal WISHA conferences. [Statutory Authority: RCW 49.17.010, [49.17].040, and [49.17].050. 00-11-098, § 296-350-60035, filed 5/17/00, effective 8/1/00.] Repealed by 01-11-038, filed 5/9/01, effective 9/1/01. Statutory Authority: RCW 49.17.010, [49.17].040, and [49.17].050.

296-350-60040 Issuing and appealing corrective notices. [Statutory Authority: RCW 49.17.010, [49.17].040, and [49.17].-050. 00-11-098, § 296-350-60040, filed 5/17/00, effective 8/1/00.] Repealed by 01-11-038, filed 5/9/01, effective 9/1/01. Statutory Authority: RCW 49.17.010, [49.17].040, and [49.17].050.

296-350-60045 Notifying employees. [Statutory Authority: RCW 49.17.010, [49.17].040, and [49.17].050. 00-11-098, § 296-350-60045, filed 5/17/00, effective 8/1/00.] Repealed by 01-11-038, filed 5/9/01, effective 9/1/01. Statutory Authority: RCW 49.17.010, [49.17].040, and [49.17].050.

WAC 296-350-010 Definitions. The following definitions apply to terms used in chapter 296-350 WAC.

Abatement date means the date on the citation when you must comply with specific safety and health standards listed on the citation and notice of assessment or the corrective notice of redetermination.

Board means the board of industrial insurance appeals.

Citation and notice refers to the citation issued to an employer under RCW 49.140.120 for any violations of WISHA safety and health rules, also known as a citation and notice of assessment.

Corrective notice refers to a corrective notice of redetermination issued after we have reassumed jurisdiction over a citation and notice.

Interim order is an order we grant allowing you to vary from WISHA requirements until we have determined whether to grant either a permanent or temporary variance.

Our refers to the department of labor and industries.

Permanent variance is an order we grant allowing you to vary from WISHA requirements when you use an alternate means that provides equal worker protection. It is in effect until we modify or revoke it.

Temporary variance is an order we grant allowing you to vary from WISHA requirements under certain circumstances (see WAC 296-350-70020).

Us refers to the department of labor and industries.

Variance refers to any order granted by us allowing you to vary from WISHA safety and health rules, including a permanent variance, temporary variance, or interim order.

We means the WISHA services division of the department of labor and industries and any other divisions charged with enforcing chapter 49.17 RCW, Washington Industrial Safety and Health Act.

Working days mean weekdays that do not fall on state holidays (see RCW 1.16.050 for a complete description of state holidays). State holidays include:

- January 1—New Year's Day;
- Martin Luther King, Jr. Day;
- Presidents' Day;
- Memorial Day;
- July 4—Independence Day;
- Labor Day;
- November 11—Veterans' Day;
- Thanksgiving Day;
- The day after Thanksgiving Day; and
- December 25—Christmas Day.

You means the employer as defined in RCW 49.17.020.

Your refers to the employer as defined in RCW 49.17.-020.

[Statutory Authority: RCW 49.17.010, [49.17].040, and [49.17].050. 00-11-098, § 296-350-010, filed 5/17/00, effective 8/1/00. Statutory Authority: Chapter 49.17 RCW. 94-15-096 (Order 94-07), § 296-350-010, filed 7/20/94, effective 9/20/94. Statutory Authority: RCW 49.17.040, 49.17.050, 49.17.240, chapters 42.30 and 43.22 RCW. 80-17-014 (Order 80-20), § 296-350-010, filed 11/13/80; Order 75-14, § 296-350-010, filed 4/14/75; Order 74-21, § 296-350-010, filed 5/6/74.]

VARIANCES FROM WISHA RULES

WAC 296-350-700 Variance from WISHA rules. Rules covering variances are found in WAC 296-350-70010 through 296-350-70070. These rules interpret RCW 49.17.080 and 49.17.090.

[Statutory Authority: RCW 49.17.010, [49.17].040, and [49.17].050. 00-11-098, § 296-350-700, filed 5/17/00, effective 8/1/00.]

WAC 296-350-70010 Purpose of variances. In certain circumstances, we allow you to deviate from a specific WISHA safety and health standard when you use agency-approved substitute measures to protect workers.

You may request the following as described in WAC 296-350-70015 through 296-350-70025:

- Permanent variances.
- Temporary variances.
- Interim orders.

[Statutory Authority: RCW 49.17.010, [49.17].040, and [49.17].050. 00-11-098, § 296-350-70010, filed 5/17/00, effective 8/1/00.]

WAC 296-350-70015 Permanent variances—Description. (1) You may request a permanent variance if you can show that you are providing an alternate means of protecting your employees from hazards. These alternative means must be as effective as the methods required by the standard.

(2) We review permanent variances periodically to decide whether they are still needed or need to be changed (see WAC 296-350-70065(1)).

(3) A permanent variance remains in effect unless we modify or revoke it.

[Statutory Authority: RCW 49.17.010, [49.17].040, and [49.17].050. 00-11-098, § 296-350-70015, filed 5/17/00, effective 8/1/00.]

WAC 296-350-70020 Temporary variances—Description. (1) You may request a temporary variance if you cannot meet one or more new WISHA requirements because:

- Professional or technical people are not available;
- Materials or equipment are not available; or
- You cannot complete construction or alteration of facilities by the effective date of a standard.

If you request a temporary variance, you must have an effective plan for coming into compliance with the applicable safety and health standards as quickly as possible.

(2) You must show that you are taking all available steps to safeguard your employees against hazards covered by the standard.

(3) Temporary variances remain in effect until you comply with the requirements of current WISHA rules or no longer than one year, whichever is shorter.

(4) You may renew a temporary variance twice for no more than one hundred eighty days each time it is renewed (see WAC 296-350-70040).

[Statutory Authority: RCW 49.17.010, [49.17].040, and [49.17].050. 00-11-098, § 296-350-70020, filed 5/17/00, effective 8/1/00.]

WAC 296-350-70025 Interim orders—Description and requesting. (1) You may request an interim order when requesting a permanent or temporary variance, or anytime after. Interim orders allow you to vary from existing WISHA requirements until we make a final decision on your variance request.

(2) We may choose to issue an interim order in response to a variance request, even when the interim order was not specifically requested.

(3) Our decision to grant or deny an interim order will not restrict our decision on a permanent or temporary variance request.

(4) Interim orders will be effective until revoked or until we approve or deny your variance request.

[Statutory Authority: RCW 49.17.010, [49.17].040, and [49.17].050. 00-11-098, § 296-350-70025, filed 5/17/00, effective 8/1/00.]

WAC 296-350-70030 Requesting a permanent variance. (1) Request for a permanent variance must be in writing and signed by you or your representative. You must include the following items in your variance request:

• Employer name and address;

• What work locations and situations that you want the variance to apply to;

• The requirements from which you want the variance (be specific and include WAC numbers);

• A specific description of your proposed alternate means of protecting employees from hazards;

• How the proposed alternative means will protect employees;

• How you have notified your employees you are applying for a variance as required in WAC 296-350-70050; and

• How you have notified your employees that they may request a hearing. All applications for variances must contain the following notice on the first page, written large enough and clearly enough to be read easily:

"Attention Employees: Your employer is applying to the department of Labor and Industries for a variance from safety and health standards. You have a right to ask the Department to have a hearing on this application, but you must ask for the hearing in writing by (date**), or the Department may act on this application without a hearing."

** This date must be at least twenty-one calendar days but not more than one month after submitting your variance request.

(2) Department forms for requesting variances are available from any labor and industries office in the state.

[Statutory Authority: RCW 49.17.010, [49.17].040, and [49.17].050. 00-11-098, § 296-350-70030, filed 5/17/00, effective 8/1/00.]

WAC 296-350-70035 Requesting a temporary variance. Requests for a temporary variance must be in writing and signed by you or your representative. You must include:

• All items listed in WAC 296-350-70030, Requesting a permanent variance.

• A specific explanation of why you cannot comply with the requirements, including documentation that supports your belief.

• What steps you will take to protect your employees until you can comply:

• What you are doing to come into compliance.

• When you will be able to come into compliance.

• A statement that this request is from a qualified person having first hand knowledge of the facts represented.

[Statutory Authority: RCW 49.17.010, [49.17].040, and [49.17].050. 00-11-098, § 296-350-70035, filed 5/17/00, effective 8/1/00.]

WAC 296-350-70040 Renewing temporary variances. You must apply for a renewal at least ninety days before the expiration date of the order. To apply for renewal, write to us, explaining why you need more time to come into compliance.

[Statutory Authority: RCW 49.17.010, [49.17].040, and [49.17].050. 00-11-098, § 296-350-70040, filed 5/17/00, effective 8/1/00.]

WAC 296-350-70045 Submitting variance requests. Submit permanent variance, temporary variance, or interim order requests using one of the following:

• Mail to:

Assistant Director, WISHA Services Division
P.O. Box 44625
Olympia, Washington 98504-4625

• Fax to: (360) 902-5459

• Bring to any labor and industries office in the state.

[Statutory Authority: RCW 49.17.010, [49.17].040, and [49.17].050. 00-11-098, § 296-350-70045, filed 5/17/00, effective 8/1/00.]

WAC 296-350-70050 Notifying employees about variance requests. You must notify your employees before requesting a permanent variance, temporary variance, or interim order by:

• Posting a copy of the application on your safety bulletin board; and

• Using other appropriate means for employees who cannot be expected to receive notices posted on the safety bulletin board (such as, providing a copy to an authorized representative or the safety committee).

[Statutory Authority: RCW 49.17.010, [49.17].040, and [49.17].050. 00-11-098, § 296-350-70050, filed 5/17/00, effective 8/1/00.]

WAC 296-350-70055 Department review and decision. (1) Review. We will review your request to determine whether to grant a variance to WISHA safety and health rules.

• If we need more information, we may contact you or others who may have relevant information.

• If we need to visit your workplace, we will contact you to make arrangements.

• If you do not provide us with the information we need or do not let us visit your workplace, we will deny your request.

(2) Decision. After reviewing your request, we will issue a written order either granting or denying it.

• We will not make a decision before the date for requesting a hearing that is listed on the variance request.

• If you have appealed a citation and notice that relates to the subject of the variance request, we may choose not to make a decision until after your appeal is resolved.

• If granted, the order will include where it applies, what rules it covers, what you must do instead of following the existing rules, an effective date, and any expiration dates, if applicable. Variances will not be retroactive. The effective date will be on or after the day we issue the order granting the variance.

• If denied, the order will include a brief statement with reason(s) supporting our decision.

[Statutory Authority: RCW 49.17.010, [49.17].040, and [49.17].050. 00-11-098, § 296-350-70055, filed 5/17/00, effective 8/1/00.]

WAC 296-350-70060 Your responsibilities once we make a decision. When you receive a written decision regarding a variance request or interim order, you must:

• Immediately notify affected employees using the same means used for the variance application (see WAC 296-350-70050); and

• Abide by the requirements specified in any variance. We can issue citations for violations of any variance.

[Statutory Authority: RCW 49.17.010, [49.17].040, and [49.17].050. 00-11-098, § 296-350-70060, filed 5/17/00, effective 8/1/00.]

WAC 296-350-70065 Changing a variance. (1) Permanent variances. We cannot change the terms of a permanent variance for the first six months it is in effect. Any time after six months, we will consider changing the terms of a variance when:

• You or your employees request changes; or

• We decide that changes may be warranted.

(2) Temporary variances. We will only consider changing a temporary variance as part of the renewal process.

(3) Interim orders. We will not change an interim order.

(4) Hearings. You, your employees, or employee representatives may request a hearing on variance changes as with variance applications (see WAC 296-350-70070).

[Statutory Authority: RCW 49.17.010, [49.17].040, and [49.17].050. 00-11-098, § 296-350-70065, filed 5/17/00, effective 8/1/00.]

WAC 296-350-70070 Variance hearings. (1) Requesting a hearing. You, any affected employee, or an employee representative may request a hearing on a variance request, temporary variance request, or changes to existing variances. All requests must be received in writing, signed by the applicant(s), and must be received by the assistant director within twenty-one calendar days of the date of the application for the variance.

(2) Department notice. We will issue a notice of the hearing ten days after receiving your request advising all interested parties that they will have the opportunity to participate. We will schedule the hearing so that you will receive notice at least twenty calendar days in advance of the hearing date.

(3) Notifying employees. Upon receiving notice of the hearing, you must immediately post copies of the notice, give copies to affected employees and employee representatives, and use any other appropriate means (see WAC 296-350-70050).

(4) Description of hearing. At the hearing, our representative will explain our view of your request for a variance or any proposed change to a variance. You, your employees, or employee representatives will then have an opportunity to explain your views and provide any relevant documents or information. Information gathered at the hearing will be used in making a decision about whether to grant or deny the request.

(5) We may tape or record a variance hearing. You, your employees, or employee representatives may request copies at cost.

[Statutory Authority: RCW 49.17.010, [49.17].040, and [49.17].050. 00-11-098, § 296-350-70070, filed 5/17/00, effective 8/1/00.]

WAC 296-350-990 Appendix A—Form F418-023-000—Application for copies of citations and notices.

APPENDIX A

DEPT. OF LABOR & INDUSTRIES
Div. of Industrial Safety & Health
P.O. Box 207
Olympia, WA 98504

APPLICATION FOR COPIES OF CITATION AND NOTICES

ISSUED PURSUANT TO THE WASHINGTON INDUSTRIAL SAFETY AND HEALTH ACT

Any employee of an employer who has been selected by the employees of that employer to act as their representative as defined in WAC 296-350-500 may apply for copies of CITATION AND NOTICES issued to said employer.

DEFINITION:

WAC 296-350-500(2) - "Employee representative" means:

(a) Any officer of the recognized bargaining unit of employees, acting on behalf of the employees of the employer.

(b) Any employee representative of an employer-employee safety committee within an establishment of the firm of the employer.

(c) Any employee of an employer who has been selected by the employees of that employer to act as their representative for the purposes indicated in subsection (1) of this section. Such selection shall be evidenced by a letter or other written communication to the Division of Industrial Safety and Health stating the name of the employee so selected and signed by not less than one-half of the employees of the employer.

Applicant certifies he/she is an employee representative by virtue of WAC 296-350-500(2)

CERTIFICATION: I HEREBY CERTIFY UNDER PENALTY OF PERJURY THAT THE ABOVE STATEMENT IS TRUE TO THE BEST OF MY KNOWLEDGE.

Signature	position	date

Name and address of applicant to which copies of CITATION AND NOTICES should be sent:

Name, address and Labor & Industries account I.D. and/or Unified Business Identifier of EMPLOYER HAVING EMPLOYEES WHO ARE REPRESENTED by the applicant (please give full information for each employer you represent - use extra paper if required):

The director or his/her authorized representative may deny this application if more than one employee representative has applied or if the applicant does not qualify as an employee representative.

For Department Use Only
Application Rcvd._____ Application Granted by_____ Date Application Granted_____
Applicant Notified_____ Expiration Date _____
Comment:

F418-023-000 app for copies of citation and notice 4-87 (Wish 300)

[Statutory Authority: Chapter 49.17 RCW. 87-24-051 (Order 87-24), § 296-350-990, filed 11/30/87. Statutory Authority: RCW 49.17.040, 49.17.050, 49.17.240, chapters 42.30 and 43.22 RCW. 80-17-014 (Order 80-20), § 296-350-990, filed 11/13/80; Order 75-14, Appendix A—Form 300 (codified as WAC 296-350-990), filed 4/14/75.]

Chapter 296-360 WAC
DISCRIMINATION, PURSUANT TO RCW 49.17.160

WAC

296-360-005	Definitions.
296-360-010	Introduction.
296-360-020	General requirements of RCW 49.17.160 of WISHA.
296-360-030	Filing a complaint of discrimination.
296-360-040	Notification of assistant director's determination.
296-360-050	Withdrawal of complaint.
296-360-060	Arbitration or other agency proceedings.
296-360-070	Persons prohibited from discriminating.
296-360-080	Persons protected by RCW 49.17.160.
296-360-090	Unprotected activities distinguished.
296-360-100	Discrimination because of a complaint under or related to WISHA.
296-360-110	Discrimination because of a proceeding under or related to the act.
296-360-120	Discrimination because of testimony.
296-360-130	Discrimination because of exercise of any right afforded by WISHA—In general.
296-360-140	Discrimination because of exercise of right afforded by WISHA—Walkaround pay.
296-360-150	Discrimination because of exercise of right afforded by WISHA—Refusal to work in an unsafe condition.
296-360-160	Payment of damages to employee discriminated against.
296-360-170	Employee's refusal to comply with safety rules.

WAC 296-360-005 Definitions. For the purposes of this chapter.

(1) "Assistant director" - the assistant director for the division of consultation and compliance.

(2) "Division" - the division of consultation and compliance of the department of labor and industries.

[Statutory Authority: Chapter 49.17 RCW. 94-15-096 (Order 94-07), § 296-360-005, filed 7/20/94, effective 9/20/94. Statutory Authority: RCW 49.17.040, 49.17.050, 49.17.240, chapters 43.22 and 42.30 RCW. 80-17-015 (Order 80-21), § 296-360-005, filed 11/13/80.]

WAC 296-360-010 Introduction. (1) Chapter 49.17 RCW, the Washington Industrial Safety and Health Act (WISHA), is designed to regulate employment conditions affecting industrial safety and health and to achieve safer and healthier work places throughout the state. WISHA requires every person who has employees to furnish each of his or her employees employment and a place of employment free from recognized hazards that are causing or likely to cause death or serious physical harm, and to comply with industrial safety and health standards promulgated under WISHA.

(2) Employees and representatives of employees are afforded a wide range of substantive and procedural rights under WISHA. Effective implementation of WISHA and achievement of its goals depend in large part upon the active but orderly participation of employees, individually and through their representatives.

(3) This chapter deals essentially with the rights of employees afforded under RCW 49.17.160. RCW 49.17.160 prohibits reprisals, in any form, against employees who exercise rights under WISHA. The purpose of this chapter is to make available in one place interpretations of the various provisions of section 16 of WISHA that will guide the assistant director in the performance of his or her duties thereunder.

[Statutory Authority: RCW 49.17.040, 49.17.050, 49.17.240, chapters 43.22 and 42.30 RCW. 80-17-015 (Order 80-21), § 296-360-010, filed 11/13/80.]

WAC 296-360-020 General requirements of RCW 49.17.160 of WISHA. RCW 49.17.160 provides that no person shall discharge or in any manner discriminate against any employee because the employee has filed any complaint under or related to WISHA, instituted or caused to be instituted any proceeding under or related to WISHA, testified or is about to testify in any proceeding under or related to WISHA, or exercised on his or her own behalf or on behalf of others any right afforded by WISHA. Any employee who believes that he/she has been discriminated against in violation of section 16 of WISHA may, within thirty days after the violation occurs, file a complaint with the assistant director alleging the violation. The division shall investigate the complaint and, if the assistant director determines that section 16 of WISHA has been violated, the division may bring a civil action against the violator in superior court. The suit may ask the court to restrain violations of RCW 49.17.160 and to grant other appropriate relief, including rehiring or reinstating the employee to his or her former position with back pay.

[Statutory Authority: RCW 49.17.040, 49.17.050, 49.17.240, chapters 43.22 and 42.30 RCW. 80-17-015 (Order 80-21), § 296-360-020, filed 11/13/80.]

WAC 296-360-030 Filing a complaint of discrimination. (1) Who may file. A complaint of RCW 49.17.160 discrimination may be filed by the employee him- or herself, or by a representative authorized to do so on his or her behalf.

(2) Nature of filing. No particular form of complaint is required.

(3) Place of filing. The complaint should be filed with the division.

(4) Time for filing. RCW 49.17.160(3) provides that an employee who believes that he or she has been discriminated against in violation of RCW 49.17.160 "may, within thirty days after such violation occurs" file a complaint with the assistant director. A major purpose of the thirty-day period is to allow the assistant director to decline to entertain complaints that have become stale. Accordingly, the division will presume that complaints not filed within thirty days of an alleged violation are untimely. There may be circumstances, however, that justify tolling the thirty-day period on recognized equitable principles or because strongly extenuating circumstances exist, e.g., where the employer has concealed, or misled the employee regarding the grounds for, discharge or other adverse action. In the absence of circumstances justifying a tolling of the thirty-day period, the division shall not accept untimely complaints.

[Statutory Authority: RCW 49.17.040 and 49.17.050. 82-13-045 (Order 82-22), § 296-360-030, filed 6/11/82. Statutory Authority: RCW 49.17.040, 49.17.050, 49.17.240, chapters 43.22 and 42.30 RCW. 80-17-015 (Order 80-21), § 296-360-030, filed 11/13/80.]

WAC 296-360-040 Notification of assistant director's determination. (1) RCW 49.17.160(3) provides that the assistant director is to notify a complainant within ninety days of the complaint of his determination whether prohibited discrimination has occurred. This ninety-day provision is directory, not mandatory. Although every effort will be made to notify complainants of the assistant director's determination within ninety days, there may be instances when it is not possible to do so.

(2) If a complainant receives a determination from the assistant director that prohibited discrimination has not occurred, the complainant may file a written request for

review by the director within fifteen working days of receipt of the determination. The request for review must set forth the basis for the request. The request shall be filed by mailing or delivering the request to the Director of Labor and Industries, P.O. Box 44000, Olympia, Washington 98504-4000. Upon review the director may set aside the assistant director's determination, remand the matter for further investigation, or affirm the determination of the assistant director. The director shall notify the complainant of the decision after review.

[Statutory Authority: Chapter 49.17 RCW. 94-15-096 (Order 94-07), § 296-360-040, filed 7/20/94, effective 9/20/94. Statutory Authority: RCW 49.17.040 and 49.17.050. 85-10-004 (Order 85-09), § 296-360-040, filed 4/19/85. Statutory Authority: RCW 49.17.040, 49.17.050, 49.17.240, chapters 43.22 and 42.30 RCW. 80-17-015 (Order 80-21), § 296-360-040, filed 11/13/80.]

WAC 296-360-050 Withdrawal of complaint. Enforcing the provisions of RCW 49.17.160 is not only a matter of protecting rights of individual employees, but also of protecting the public interest. Attempts by an employee to withdraw a filed complaint will not necessarily result in termination of the division's investigation. The division's jurisdiction cannot be foreclosed as a matter of law by unilateral action of the employee. However, a voluntary and uncoerced request from a complainant to withdraw his/her complaint shall generally be accepted.

[Statutory Authority: Chapter 49.17 RCW. 94-15-096 (Order 94-07), § 296-360-050, filed 7/20/94, effective 9/20/94. Statutory Authority: RCW 49.17.040, 49.17.050, 49.17.240, chapters 43.22 and 42.30 RCW. 80-17-015 (Order 80-21), § 296-360-050, filed 11/13/80.]

WAC 296-360-060 Arbitration or other agency proceedings. (1) General.

(a) An employee who files a complaint under RCW 49.17.160 may pursue remedies under grievance arbitration proceedings in collective bargaining agreements, and may also resort to other agencies, such as the National Labor Relations Board, for relief. The division's jurisdiction to entertain RCW 49.17.160 complaints, to investigate, and to determine whether discrimination has occurred, is independent of the jurisdiction of other agencies or bodies. The division may file an action in superior court regardless of the pendency of other proceedings.

(b) Where it is possible, however, the division favors voluntary resolution of disputes under procedures in collective bargaining agreements. Also, the division should defer to the jurisdiction of other forums established to resolve disputes that may also be related to RCW 49.17.160 complaints. Thus, where a complainant is pursuing remedies other than those provided by RCW 49.17.160 it may be proper to postpone the assistant director's determination whether discrimination has occurred, and defer to the results of such proceedings.

(2) Postponement of determination. Postponement of determination is justified where the rights asserted in other proceedings are substantially the same as rights under RCW 49.17.160 and those proceedings are not likely to violate the rights guaranteed by RCW 49.17.160. The factual issues in the such proceedings must be substantially the same as those raised by the RCW 49.17.160 complaint, and the forum hearing the matter must have the power to determine the ultimate issue of discrimination.

(3) Deferral to outcome of other proceedings. Determinations to defer to the outcome of another proceeding begun by a complainant must be made after careful scrutiny. It must be clear that the proceeding dealt adequately with all factual issues, that it was fair, regular, and free of procedural infirmities, and that its outcome did not violate the purpose and policy of WISHA. If another action begun by a complainant is dismissed without an adjudicatory hearing on the merits, the division will not necessarily regard the dismissal as determinative of the merits of the RCW 49.17.160 complaint.

[Statutory Authority: RCW 49.17.040, 49.17.050, 49.17.240, chapters 43.22 and 42.30 RCW. 80-17-015 (Order 80-21), § 296-360-060, filed 11/13/80.]

WAC 296-360-070 Persons prohibited from discriminating. RCW 49.17.160 specifically states that "no person shall discharge or in any manner discriminate against any employee" because the employee has exercised rights under WISHA. RCW 49.17.020(5), defines "person" as "one or more individuals, partnerships, associations, corporations, business trusts, legal representatives, or any organized group of persons." Consequently, the prohibitions of RCW 49.17.160 are not limited to actions taken by employers against their own employees. A person may be charged with discriminating against an employee of another person. RCW 49.17.160 extends to such entities as organizations representing employees in collective bargaining, employment agencies, or any other person in a position to discriminate against an employee. See Meek v. United States, 136 F.2d 679 (6th Cir., 1943); Bowe v. Judson C. Burns, 137 F.2d 37 (3rd Cir., 1943).

[Statutory Authority: RCW 49.17.040, 49.17.050, 49.17.240, chapters 43.22 and 42.30 RCW. 80-17-015 (Order 80-21), § 296-360-070, filed 11/13/80.]

WAC 296-360-080 Persons protected by RCW 49.17.160. (1) All employees are afforded the full protection of RCW 49.17.160. WISHA defines an employee as "an employee of an employer who is employed in a business of his/her employer which affects commerce." RCW 49.17.020(4). WISHA does not define "employ"; however, the broad remedial nature of WISHA demonstrates a clear intent that the existence of an employment relationship, for purposes of RCW 49.17.160, is to be based upon economic realities rather than upon common law doctrines and concepts. See U.S. v. Silk, 331 U.S. 704 (1947); Rutherford Food Corporation v. McComb, 331 U.S. 722 (1947).

(2) For purposes of RCW 49.17.160, an applicant for employment could be considered an employee. See NLRB v. Lamar Creamery, 246 F.2d 8 (5th Cir., 1957).

[Statutory Authority: Chapter 49.17 RCW. 94-15-096 (Order 94-07), § 296-360-080, filed 7/20/94, effective 9/20/94. Statutory Authority: RCW 49.17.040, 49.17.050, 49.17.240, chapters 43.22 and 42.30 RCW. 80-17-015 (Order 80-21), § 296-360-080, filed 11/13/80.]

WAC 296-360-090 Unprotected activities distinguished. (1) An employer or others may base actions that adversely affect an employee upon nondiscriminatory grounds. An employee's engagement in activities protected by WISHA does not automatically render him/her immune from discharge or discipline for legitimate reasons, or from adverse action dictated by nonprohibited considerations. See

NLRB v. Dixie Motor Coach Corp. 128 F.2d 201 (5th Cir., 1942).

(2) To establish a violation of RCW 49.17.160, the employee's engagement in protected activity need not be the sole consideration behind discharge or other adverse action. If protected activity was a substantial reason for the action, or if the discharge or other adverse action would not have taken place "but for" the employee's engagement in protected activity, RCW 49.17.160 has been violated.

[Statutory Authority: Chapter 49.17 RCW. 94-15-096 (Order 94-07), § 296-360-090, filed 7/20/94, effective 9/20/94. Statutory Authority: RCW 49.17.040, 49.17.050, 49.17.240, chapters 43.22 and 42.30 RCW. 80-17-015 (Order 80-21), § 296-360-090, filed 11/13/80.]

WAC 296-360-100 Discrimination because of a complaint under or related to WISHA. RCW 49.17.160 prohibits discharge of, or discrimination against, an employee because the employee has filed any complaint under or related to this act.

(1) An example of a complaint made "under" WISHA would be an employee request for inspection pursuant to section 11 (RCW 49.17.110). This is not the only type of complaint protected by RCW 49.17.160, however. The range of complaints "related to" WISHA is commensurate with the broad remedial purposes of this legislation and the sweeping scope of its application.

(2) Complaints registered with other state or federal agencies that have the authority to regulate or investigate industrial safety and health conditions are complaints "related to" WISHA.

(3) The protection offered employees by WISHA would be seriously undermined if employees were discouraged from lodging complaints about industrial safety and health matters with their employers. Complaints to employers, if made in good faith, are related to WISHA, and an employee is protected against discharge or discrimination caused by a complaint to the employer.

(4) To come within the protection of RCW 49.17.160, a complaint must relate to conditions at the work place, as distinguished from complaints touching only upon general public safety and health.

[Statutory Authority: RCW 49.17.040, 49.17.050, 49.17.240, chapters 43.22 and 42.30 RCW. 80-17-015 (Order 80-21), § 296-360-100, filed 11/13/80.]

WAC 296-360-110 Discrimination because of a proceeding under or related to the act. (1) RCW 49.17.160 prohibits discharge of, or discrimination against, any employee because the employee has "instituted or caused to be instituted any proceeding under or related to WISHA." Proceedings that can arise specifically under WISHA include inspections of worksites under RCW 49.17.070, employee contest of an abatement date under RCW 49.17.140, employee initiation of proceedings for promulgation of an industrial safety and health standard, employee application for modification or revocation of a variance under RCW 49.17.080, employee judicial challenge of a standard, and employee appeal of board of industrial insurance appeals order under RCW 49.17.140. In determining whether a "proceeding" is "related to" WISHA, the considerations discussed in WAC 296-360-100 are also applicable.

(2) An employee need not directly institute a proceeding. It is sufficient if he or she sets into motion acts of others that result in proceedings under or related to WISHA.

[Statutory Authority: RCW 49.17.040, 49.17.050, 49.17.240, chapters 43.22 and 42.30 RCW. 80-17-015 (Order 80-21), § 296-360-110, filed 11/13/80.]

WAC 296-360-120 Discrimination because of testimony. RCW 49.17.160 prohibits discharge of, or discrimination against, any employee because the employee "has testified or is about to testify" in proceedings under or related to WISHA. This protection is not limited to testimony in proceedings instituted or caused to be instituted by the employee, but extends to any statements given in the course of judicial, quasijudicial, and administrative proceedings, including inspections, investigations, administrative adjudications, and rules hearings.

[Statutory Authority: RCW 49.17.040, 49.17.050, 49.17.240, chapters 43.22 and 42.30 RCW. 80-17-015 (Order 80-21), § 296-360-120, filed 11/13/80.]

WAC 296-360-130 Discrimination because of exercise of any right afforded by WISHA—In general. In addition to protecting employees who file complaints, institute proceedings, or testify in proceedings under or related to WISHA, RCW 49.17.160 also protects employees from discrimination occurring because of the exercise "of any right afforded by this chapter." Certain rights are explicitly stated in WISHA. Other rights exist by necessary implication. For example, employees may request information from the occupational safety and health administration or the department of labor and industries. Also, employees interviewed by agents of the division in the course of inspections or investigations cannot subsequently be discriminated against because of their cooperation.

[Statutory Authority: RCW 49.17.040, 49.17.050, 49.17.240, chapters 43.22 and 42.30 RCW. 80-17-015 (Order 80-21), § 296-360-130, filed 11/13/80.]

WAC 296-360-140 Discrimination because of exercise of right afforded by WISHA—Walkaround pay. Employee participation in walkaround inspections under RCW 49.17.100 is essential. Employees are a vital source of information to the division about work place hazards. Employees must be able freely to exercise their statutory right to participate in walkarounds without fear of economic loss, such as the denial of pay for the time spent helping WISHA inspectors during the walkaround. To ensure the unimpeded flow of information to the inspectors, and the unfettered statutory right of employees to participate in walkaround inspections, an employer's failure to pay employees for time they spend in walkaround inspections is discrimination under RCW 49.17.160. In addition, an employer's failure to pay employees for time spent in other inspection-related activities, such as answering questions of inspectors or participating in the opening and closing conferences, is discrimination under RCW 49.17.160.

[Statutory Authority: Chapter 49.17 RCW. 94-15-096 (Order 94-07), § 296-360-140, filed 7/20/94, effective 9/20/94. Statutory Authority: RCW 49.17.040, 49.17.050, 49.17.240, chapters 43.22 and 42.30 RCW. 80-17-015 (Order 80-21), § 296-360-140, filed 11/13/80.]

WAC 296-360-150 Discrimination because of exercise of right afforded by WISHA—Refusal to work in an unsafe condition. (1) Review of WISHA and examination of the legislative history discloses that, as a general matter, WISHA grants no specific right to employees to walk off the job because of potential unsafe conditions at the work place. A hazardous condition that may violate WISHA will ordinarily be corrected by the employer, once brought to its attention. If the employer does not correct a hazard, or if there is a dispute about the existence of a hazard, the employee normally can ask the division to inspect the work place pursuant to RCW 49.17.110, or can seek help from other public agencies that have responsibility for safety and health. Under such circumstances, an employer would not violate RCW 49.17.160 by disciplining an employee who refuses to work because of an alleged safety or health hazard.

(2) Occasions arise, however, when an employee is confronted with a choice between not performing assigned tasks or subjecting him- or herself to serious injury or death arising from a hazard at the work place. If the employee, with no reasonable alternative, refuses in good faith to expose him- or herself to the dangerous condition, he or she is protected against subsequent discrimination.

(3) An employee's refusal to work is protected if he or she meets the following requirements:

(a) The refusal to work must be in good faith, and must not be a disguised attempt to harass the employer or disrupt the employer's business;

(b) The hazard causing the employee's apprehension of death or injury must be such that a reasonable person, under the circumstances then confronting the employee, would conclude that there is a real danger of death or serious injury; and

(c) There must be insufficient time, due to the urgency of the situation, to eliminate the danger through resort to regular statutory enforcement channels.

(4) As indicated in subsection (3), an employee's refusal to work is not protected unless it is a good faith response to a hazardous condition. To determine whether an employee has acted in good faith, the division will consider, among other factors, whether the employee:

(a) Asked the employer to correct the hazard;

(b) Asked for other work;

(c) Remained on the job until ordered to leave by the employer; or

(d) Informed the employer that, if the hazard was not corrected, the employee would refuse to work.

The lack of one or more of these factors shall not necessarily preclude a finding of good faith if other factors do establish good faith. The division will also consider whether the employer knew that the hazard could cause serious injury or death, or that the hazard was prescribed by a specific safety standard promulgated under WISHA or any other law that relates to the safety and health of a place of employment.

[Statutory Authority: RCW 49.17.040, 49.17.050, 49.17.240, chapters 43.22 and 42.30 RCW. 80-17-015 (Order 80-21), § 296-360-150, filed 11/13/80.]

WAC 296-360-160 Payment of damages to employee discriminated against. (1) If an employer discriminates against an employee such that the employee earns less than he or she would have earned absent the discrimination, the employer shall pay the employee the difference between the wages that the employee would have earned absent the discrimination and the wages the employee actually earned after the discrimination.

(2) If an employer discriminates against an employee for a refusal to work that is protected under WAC 296-360-150, the employer need not pay the employee's wages for the time spent fixing the hazard, or that would have been spent fixing the hazard, if the employer (a) had to or would have had to shut down the job to make the repair and (b) had not other work the employee could have done.

[Statutory Authority: RCW 49.17.040, 49.17.050, 49.17.240, chapters 43.22 and 42.30 RCW. 80-17-015 (Order 80-21), § 296-360-160, filed 11/13/80.]

WAC 296-360-170 Employee's refusal to comply with safety rules. An employee who refuses to comply with industrial safety and health standards or valid safety rules implemented by the employer in furtherance of WISHA is not exercising a right afforded by WISHA. Discipline taken by employers solely in response to an employee's refusal to comply with appropriate safety rules and regulations is not discrimination prohibited by RCW 49.17.160. This situation should be distinguished from refusals to work discussed in WAC 296-360-150.

[Statutory Authority: RCW 49.17.040, 49.17.050, 49.17.240, chapters 43.22 and 42.30 RCW. 80-17-015 (Order 80-21), § 296-360-170, filed 11/13/80.]

Chapter 296-400A WAC
PLUMBER CERTIFICATION RULES

(Formerly chapter 296-400 WAC)

WAC

296-400A-005 What definitions do I need to know to understand these rules?
296-400A-020 How do I obtain a certificate of competency?
296-400A-021 How do I obtain a medical gas piping installer endorsement?
296-400A-023 What process is required for renewal of journeyman and residential specialty plumber certificates of competency?
296-400A-025 Who approves medical gas piping installer endorsement training courses?
296-400A-026 What training course approval procedures for medical gas will the department follow?
296-400A-027 Where can I obtain information regarding department approved training course providers?
296-400A-028 What are the requirements for continuing education and classroom training?
296-400A-029 What is the implementation schedule for the continuing education course requirements?
296-400A-030 Do I need a temporary permit?
296-400A-031 How do I qualify for a temporary permit?
296-400A-032 How do I obtain a temporary permit?
296-400A-033 What is the duration of a temporary permit?
296-400A-035 How can I be placed on inactive status?
296-400A-045 What fees will I have to pay?
296-400A-050 When does the advisory board of plumbers meet?
296-400A-070 Can I work as a certified plumber in Washington without taking the Washington state plumbers' competency examination?
296-400A-100 For certification purposes, how are "years of employment" computed and documented?
296-400A-110 Does previous work experience count toward my trainee certificate?
296-400A-120 What do I need to know about plumber trainee certificates (excluding backflow assembly maintenance and repair specialty certification)?
296-400A-121 What do I need to know about trainee experience and plumber examination requirements for the journeyman and specialty plumber (excluding the backflow assembly maintenance and repair specialty)?

296-400A-122	What do I need to know about trainee experience and the backflow assembly maintenance and repair specialty examination requirements?
296-400A-130	What if I make a false statement or a material misrepresentation on an application, an employment report or a trainee certificate?
296-400A-135	How does the department enforce trainee supervision?
296-400A-140	How does the department enforce plumbers certification requirements?
296-400A-150	May the department audit the records of a contractor?
296-400A-155	Audit of trainee hours.
296-400A-300	What procedures does the department follow when issuing a notice of infraction?
296-400A-400	What are the monetary penalties for violating certification requirements?
296-400A-425	What if I owe outstanding penalties related to a department issued plumber infraction?
296-400A-430	If I am a certified backflow assembly maintenance and repair, journeyman, or specialty plumber do I need to be a registered contractor under chapter 18.27 RCW?

WAC 296-400A-005 What definitions do I need to know to understand these rules? Unless a different meaning is clearly required by the context, the following terms and definitions are important:

"Advisory board" is the state advisory board of plumbers.

"Audit" means an assessment, evaluation, examination or investigation of, contractor's accounts, books and records for the purpose of verifying the contractor's compliance with RCW 18.106.320.

"Backflow assembly" or **"backflow prevention assembly"** or **"backflow preventer"** is a device as described in the Uniform Plumbing Code used to prevent the undesired reversal of flow of water or other substances through a cross-connection into the public water system or consumer's potable water system.

"Backflow assembly tester" is an individual certified by the department of health to perform tests to backflow assemblies.

"Continuing education" is approved plumbing and electrical courses for journeyman and residential specialty plumbers, to meet the requirements to maintain their plumbing certification and for trainees or individuals to become certified plumbers in Washington.

"Continuing education course provider" is an entity approved by the department, in consultation with the state advisory board of plumbers, to provide continuing education training for journeyman, specialty residential plumbers and trainees. All training course providers must comply with the requirements in WAC 296-400A-028.

"Continuity affidavit" is a form developed by the department that is used to verify whether medical gas pipe installation work has been performed. This form is provided to the department annually by the person holding the medical gas piping installer endorsement and requires the signature of the employer of the medical gas piping installer.

"Contractor" means any person, corporate or otherwise, who engages in, or offers or advertises to engage in, any work covered by the provisions of chapter 18.106 RCW by way of trade or business, or any person, corporate or otherwise, who employs anyone, or offers or advertises to employ anyone, to engage in any work covered by the provisions of chapter 18.106 RCW and is registered as a contractor under chapter 18.27 RCW.

"Dispatcher" means the contractor's employee who authorized the work assignment of the person employed in violation of chapter 18.106 RCW.

"Department" is the department of labor and industries.

"Director" is the director of the department of labor and industries.

"Journeyman plumber" is anyone who has learned the commercial plumbing trade and has been issued a journeyman certificate of competency by the department. A journeyman plumber may work on plumbing projects including residential, commercial and industrial worksite locations.

"Medical gas piping installer" is anyone who has been issued a medical gas piping installer endorsement of competency by the department.

"Medical gas piping systems" are piping systems that convey or involve oxygen, nitrous oxide, high pressure nitrogen, medical compressed air and medical vacuum systems.

"Plumbing" is that craft involved in installing, altering, repairing and renovating potable water systems, liquid waste systems and medical gas piping systems within a building. The installation of water softening or water treatment equipment into a water system is not considered plumbing.

"Records" include, but are not limited to, all bids, invoices, billing receipts, time cards and payroll records that show the work was performed, advertised, or bid.

"Specialty plumber" is anyone who has been issued a specialty plumbers certificate of competency by the department limited to:

(a) Installation, maintenance and repair of plumbing for single-family dwellings, duplexes and apartment buildings which do not exceed three stories; or

(b) Maintenance and repair of backflow assemblies located within a residential or commercial building or structure. For the purposes of this subsection, "maintenance and repair" includes cleaning and replacing internal parts of an assembly, but does not include installing or replacing backflow assemblies.

"Supervision" for the purpose of these rules means within sight or sound. Supervision requirements are met when the supervising plumber is on the premises and within sight or sound of the individual who is being trained.

"Training course provider" is an entity approved by the department, in consultation with the state advisory board of plumbers, to provide medical gas piping installer training. All training course providers must comply with the requirements in WAC 296-400A-026.

"Trainee plumber" is anyone who has been issued a trainee certificate and is learning or being trained in the plumbing trade with direct supervision of either a journeyman plumber or specialty plumber working in their specialty.

[Statutory Authority: RCW 18.106.040, 18.106.140, 2002 c 82, and 2003 c 399. 04-12-046, § 296-400A-005, filed 5/28/04, effective 6/30/04. Statutory Authority: RCW 18.106.040, 18.106.140, 2001 c 281, and chapter 18.106 RCW. 02-14-074, § 296-400A-005, filed 6/28/02, effective 7/1/02. Statutory Authority: Chapter 18.106 RCW. 98-13-126, § 296-400A-005, filed 6/17/98, effective 7/20/98. Statutory Authority: RCW 18.106.050, [18.106.]070, [18.106.]110, [18.106.]125, [18.106.]140 and [18.106.]270. 97-11-052, § 296-400A-005, filed 5/20/97, effective 6/30/97.]

WAC 296-400A-020 How do I obtain a certificate of competency? You can obtain a certificate of competency by completing the following requirements for:

(1) Journeyman and specialty plumber certificate (excluding backflow assembly maintenance and repair specialty certification):

(a) Submitting a competency examination application to the department;

(b) Paying the examination fee shown in WAC 296-400A-045(1);

(c) Submitting the required evidence of competency and experience to the department as required under WAC 296-400A-120 and 296-400A-121;

(d) Passing the competency examination; and

(e) Providing documentation to the department with continuing education requirements.

(2) Backflow assembly maintenance and repair specialty certificate:

(a) Submitting a competency examination application to the department;

(b) Paying the application and certificate fee shown in WAC 296-400A-045(2); and

(c) Passing the competency examination.

[Statutory Authority: RCW 18.106.040, 18.106.140, 2002 c 82, and 2003 c 399. 04-12-046, § 296-400A-020, filed 5/28/04, effective 6/30/04. Statutory Authority: RCW 18.106.040, 18.106.140, 2001 c 281, and chapter 18.106 RCW. 02-14-074, § 296-400A-020, filed 6/28/02, effective 7/1/02. Statutory Authority: RCW 18.106.050, [18.106.]070, [18.106.]110, [18.106.]125, [18.106.]140 and [18.106.]270. 97-11-052, § 296-400A-020, filed 5/20/97, effective 6/30/97.]

WAC 296-400A-021 How do I obtain a medical gas piping installer endorsement? (*Only journeyman plumbers holding active state of Washington certification may apply for this endorsement.*)

You can obtain a medical gas piping installer endorsement by completing the following requirements:

(1) Submit an application to the department; and

(2) Pay the examination application fee shown in WAC 296-400A-045; and

(3) Submit the required evidence of approved training to the department; and

(4) Pass the written and practical competency examination;* and

(5) Pay the endorsement issuance fee shown in WAC 296-400A-045 to the department.

At the effective date of these medical gas piping installer rules, you may apply for the state of Washington medical gas piping installer endorsement in lieu of taking the medical gas piping installer examination, if you hold a current medical gas piping installers certificate issued by a department recognized training course provider. This opportunity to obtain your endorsement without taking the examination will expire one year from the effective date of these medical gas piping installer rules.

*The written and practical competency examination is performed under contract with a nationally recognized testing agency. The results of the competency examination will be forwarded to the department for processing.

[Statutory Authority: RCW 18.106.040, 18.106.140, 2002 c 82, and 2003 c 399. 04-12-046, § 296-400A-021, filed 5/28/04, effective 6/30/04. Statutory Authority: Chapter 18.106 RCW. 98-13-126, § 296-400A-021, filed 6/17/98, effective 7/20/98.]

WAC 296-400A-023 What process is required for renewal of journeyman and residential specialty plumber certificates of competency? (1) An individual must apply for renewal of their plumbing certificate before the expiration date of the certificate. The individual may not apply for renewal more than ninety days prior to the expiration date. Renewed certificates are valid for two years.

(2) An individual may renew their certificate within ninety days after the expiration date without reexamination if the individual pays the late renewal fee listed in WAC 296-400A-045.

(3) All applications for renewal received more than ninety days after the expiration date of the plumbing certificate require that the plumber pass the appropriate competency examination before being recertified.

(4) All applicants for plumbing certificate renewal must:

(a) Submit a complete renewal application;

(b) Pay all appropriate fees; and

(c) Provide accurate evidence on the renewal form that the individual has completed the continuing education requirements described in WAC 296-400A-028.

If an individual files inaccurate or false evidence of continuing education information when renewing a plumbing certificate, the individual's plumbing certificate may be suspended or revoked.

(5) A journeyman or residential specialty plumber certificate holder who has not completed the required hours of continuing education prior to the renewal date must pay a doubled fee according to RCW 18.106.070. Also, if the required hours of continuing education are not completed within ninety days after the expiration date the applicant will be required to retake the examination and pay the appropriate fees prior to being placed in active status.

(6) An individual may renew a suspended plumbing certificate by submitting a complete renewal application including obtaining and submitting the continuing education required for renewal. However, the certificate will remain in a suspended status for the duration of the suspension period.

(7) An individual may not renew a revoked plumbing certificate.

[Statutory Authority: RCW 18.106.040, 18.106.140, 2002 c 82, and 2003 c 399. 04-12-046, § 296-400A-023, filed 5/28/04, effective 6/30/04.]

WAC 296-400A-025 Who approves medical gas piping installer endorsement training courses? RCW 18.106.-050 authorizes the department to:

(1) Approve training courses for the medical gas piping installer endorsement; and

(2) Set training course fees.

[Statutory Authority: Chapter 18.106 RCW. 98-13-126, § 296-400A-025, filed 6/17/98, effective 7/20/98.]

WAC 296-400A-026 What training course approval procedures for medical gas will the department follow? (1) The department will review and approve courses submitted by training course providers that offer medical gas piping systems training. Course approvals will be decided in consultation with the state advisory board of plumbers.

(2) All providers seeking course approval, must submit the required information (see subsection (5) of this section) to the department at least thirty days before a regularly sched-

uled advisory board meeting. **No course can be offered as meeting the requirements of a medical gas endorsement until it has been approved.**

(3) All material required for approval will be reviewed without testimony and the review will be based solely upon the information submitted. Once reviewed, the department has five working days to give a provider written notification of acceptance or rejection. In the case of rejection, the department must specify its reasons.

(4) If a provider has a course rejected, it may request a hearing before the advisory board at the next regularly scheduled meeting. Any information supporting the provider's position, which was not included with the original approval request, must be submitted to the board at least twenty days before the meeting at which the hearing will be held.

At the hearing, the department and the provider may produce witnesses and give testimony. The hearing must be conducted according to chapter 34.05 RCW. The board must base its decision upon the testimony and evidence presented and must notify the parties immediately upon reaching its decision. A majority of the board is necessary to render a decision.

(5) Specific course approval criteria:

(a) All training courses must conform to and be based upon current standards and requirements governing the installation of medical gas piping systems.

(b) All course approval requests must include:

(i) A general description of the course including its scope, the instructional materials to be used and the instructional methods to be followed; and

(ii) A copy of the complete medical gas piping installer training curriculum; and

(iii) A detailed course outline; and

(iv) The name and qualifications of the course instructor(s); and

(v) The locations where the course will be taught; and

(vi) The days and hours the course will be offered; and

(vii) The specific fees associated with the course, as well as, the total cost of the course.

(c) All fees for approved training courses must be reasonable and in line with fees charged for other comparable code based training courses.

(6) Training courses are approved for a three-year period.

(7) A provider, whose courses are approved, must give the department literature describing the courses so the department can share this information to prospective applicants.

(8) It is the responsibility of the provider to annually review and update its courses and to notify the department of any changes.

(9) The department may withdraw its approval of any training course if it determines the provider is no longer in compliance with the requirements of this chapter. If the department withdraws its approval of a training course, it must give the provider written notification of the withdrawal specifying the reasons for its decision. If the department withdraws its approval of a training course the provider may request a hearing before the advisory board at the next regularly scheduled meeting. Any information supporting the provider's position must be submitted to the board at least twenty days before the meeting at which the hearing will be held. At the hearing the department and the provider may produce witnesses and give testimony. The hearing must be conducted according to chapter 34.05 RCW. The board must base its decision upon the testimony and evidence presented and must notify the parties immediately upon reaching its decision. A majority of the board is necessary to render a decision.

[Statutory Authority: RCW 18.106.040, 18.106.140, 2002 c 82, and 2003 c 399. 04-12-046, § 296-400A-026, filed 5/28/04, effective 6/30/04. Statutory Authority: Chapter 18.106 RCW. 98-13-126, § 296-400A-026, filed 6/17/98, effective 7/20/98.]

WAC 296-400A-027 Where can I obtain information regarding department approved training course providers? The department will produce a list of all approved training course providers and/or course contact persons. This list will be available to all applicants who request it. It will also be available at all department service locations.

[Statutory Authority: Chapter 18.106 RCW. 98-13-126, § 296-400A-027, filed 6/17/98, effective 7/20/98.]

WAC 296-400A-028 What are the requirements for continuing education and classroom training?

What are the general and continuing education course requirements for journeyman, residential specialty plumbers and plumber trainees?

(1) Journeyman, residential specialty plumber and plumber trainee.

(a) To be eligible for renewal of a journeyman plumber or residential specialty plumber certificate, the individual must have completed at least sixteen hours of approved continuing education for each two years of the prior certification period. Individuals will be required in the prior two-year period to have completed at least eight hours of plumbing code and at least four hours of electrical code from the currently adopted Washington state plumbing and electrical codes. The remaining four hours may be plumbing or electrical trade related classes.

(b) Plumber trainees must complete at least eight hours per year of classroom training from an approved continuing education course for each year of the prior certification period. Trainee will be required during a two-year period to complete at least eight hours of plumbing code and at least four hours of electrical code from the currently adopted Washington state plumbing and electrical codes. The remaining four hours may be plumbing or electrical trade related classes.

(c) Any portion of a year of a prior plumber certification period is equal to one year for the purposes of the required continuing education.

(2) An individual will not be given credit for the same approved continuing education course taken more than once in the two years prior to the renewal date. No credit will be granted for any course not approved by the department.

(3) Continuing education requirements do not apply to backflow specialty plumbers under chapter 18.106 RCW and this chapter.

Note: Subsections (1), (2) and (3) of this section take effect July 1, 2005.

Approval process - continuing education course.

(4) The advisory board of plumbers or plumbing board subcommittee will review each continuing education course. The advisory board of plumbers or plumbing board subcommittee will recommend approval or disapproval to the department. The department will either approve or disapprove the course.

(5) To be considered for approval, a continuing education course must consist of not less than two hours of instruction and must be open to monitoring by a representative of the department and/or the plumbing board at no charge. If the department determines that the continuing education course does not meet or exceed the minimum requirements for approval, the department may revoke the course approval or reduce the number of credited hours.

(6) Approved courses must be based on:

(a) Currently adopted edition of the *Uniform Plumbing Code and National Electrical Code*;

(b) Chapters 18.106 or 19.28 RCW or chapters 296-400A or 296-46B WAC; or

(c) Materials and methods as they pertain to the industrial practices of plumbing or electrical construction, building management systems, plumbing or electrical maintenance, or workplace health and safety.

(7) Code-update courses must be based on the entire currently adopted Uniform Plumbing Code or National Electrical Code.

Application - for continuing education course approval.

(8) All applications for course approval must be on forms provided by the department. The plumbing board and the department will only consider the written information submitted with the application when considering approval of the continuing education training course.

(9) The department will provide continuing education application forms to sponsors upon request. The course sponsor must submit an original completed application for course approval and three copies (unless submitted electronically using department prescribed technology) to the department. The department must receive the complete course application from the sponsor in writing at least forty-five days before the first class requested for approval is offered.

(10) A complete application for course approval must include:

(a) The appropriate course application fee;

(b) Course title, number of classroom instruction hours, and whether the training is open to the public;

(c) Sponsor's name, address, contact's name and phone number;

(d) Course outline (general description of the training, including specific Uniform Plumbing Code or National Electrical Code articles referenced);

(e) Lists of resources (texts, references, visual aids);

(f) Names and qualifications of instructors. Course instructors must show prior instructor qualification and experience similar to that required by the work force training and education coordinating board under chapter 28C.10 RCW;

(g) Any additional documentation to be considered; and

(h) A sample copy of the completion certificate issued to the course participants.

(11) The course sponsor seeking approval of a continuing education course will be notified of the subcommittee's decision within five days of the completed review of the application.

(12) If the application is not approved, the rejection notice will include an explanation of the reason(s) for rejection. If the course sponsor disagrees with the subcommittee's decision, the course sponsor may request a reconsideration hearing by the full plumbing board. A request to appeal course rejection must be received by the department forty-five days before a regularly scheduled board meeting. The course sponsor must submit, to the department, any additional information to be considered during the hearing, in writing, at least thirty days before the board hearing. The course sponsor must provide at least twenty copies of any written information to be submitted to the board.

Offering - continuing education course.

(13) The course sponsor may offer an approved course for up to three years without additional approval. However, if the course is classified as code-update or code-related and a new edition of the *Uniform Plumbing Code* or *National Electrical Code* is adopted within the course approval period, the course approval will be considered automatically revoked and the course sponsor must submit a new application for review by the department and approval by the plumbing board subcommittee.

(14) A continuing education course attended or completed by an individual before final approval by the plumbing board subcommittee cannot be used to meet the plumbing certificate renewal requirements.

Documentation - Washington approved training course attendance/completion.

(15) The department is not responsible for providing verification of an individual's continuing education history with the course sponsor.

(16) The course sponsor must provide the department with an accurate and typed course attendance/completion roster for each course given.

(a) The attendance/completion roster must be provided within thirty days of course completion.

(b) In addition, the course sponsor must provide the attendance/completion roster in an electronic format provided by the department.

(c) The attendance/completion roster must show each participant's name, Washington certificate number, course number, location of course, date of completion, and instructor's name. The typed roster must contain the signature of the course sponsor's authorized representative.

(17) If the course sponsor fails to submit the required attendance/completion rosters within thirty days of the course completion, the department may revoke or suspend the course approval.

(18) Course sponsors must award a certificate to each participant completing the course from which the participant will be able to obtain:

(a) Name of course sponsor;

(b) Name of course;

(c) Date of course;

(d) Course approval number;

(e) The number of continuing education units; and

(f) The type of continuing education units.

(19) The department will only use a copy of the sponsor's attendance/completion roster as final evidence that the participant completed the training course.

(20) The department will keep submitted rosters of the continuing education courses on file only for audit purposes. The department is not responsible for the original of any completion certificate issued.

Documentation - out-of-state training course attendance/completion.

(21) To apply continuing education units earned out-of-state from course sponsors who do not have state of Washington approved courses, one of the following conditions must be met:

(a) The individual must request that the course sponsor submit a complete continuing education course application and requirements as described in this section for in-state courses.

Application for course approval will not be considered more than three years after the date of the course.

(b) The department must have entered into a reciprocal agreement with the state providing course approval.

The participant must provide a copy of an accurate and completed award or certificate from the course sponsor identifying the course location, date of completion, participant's name, and Washington certificate number. The department will only accept a copy of the sponsor's certificate or form as evidence that the participant attended and completed the course.

[Statutory Authority: RCW 18.106.040, 18.106.140, 2002 c 82, and 2003 c 399. 04-12-046, § 296-400A-028, filed 5/28/04, effective 6/30/04.]

WAC 296-400A-029 What is the implementation schedule for the continuing education course requirements?

• Individuals that renew between July 1, 2005, and June 30, 2006, are required to complete eight hours of continuing education courses.

• Effective July 1, 2006, all renewals will require sixteen hours of continuing education.

[Statutory Authority: RCW 18.106.040, 18.106.140, 2002 c 82, and 2003 c 399. 04-12-046, § 296-400A-029, filed 5/28/04, effective 6/30/04.]

WAC 296-400A-030 Do I need a temporary permit? You need a temporary permit if you are an active out-of-state journeyman plumber or a residential specialty plumber residing in a state that does not have a reciprocal agreement with Washington and you would like to work as a plumber in Washington. Temporary permits are not issued for installers of medical gas piping systems.

Temporary permits are not issued for the backflow assembly maintenance and repair specialty. Therefore, WAC 296-400A-030 through 296-400A-033 do not apply to this specialty.

[Statutory Authority: RCW 18.106.040, 18.106.140, 2002 c 82, and 2003 c 399. 04-12-046, § 296-400A-030, filed 5/28/04, effective 6/30/04. Statutory Authority: RCW 18.106.040, 18.106.140, 2001 c 281, and chapter 18.106 RCW. 02-14-074, § 296-400A-030, filed 6/28/02, effective 7/1/02. Statutory Authority: Chapter 18.106 RCW. 98-13-126, § 296-400A-030, filed 6/17/98, effective 7/20/98. Statutory Authority: RCW 18.106.050, [18.106.]070, [18.106.]110, [18.106.]125, [18.106.]140 and [18.106.]270. 97-11-052, § 296-400A-030, filed 5/20/97, effective 6/30/97.]

WAC 296-400A-031 How do I qualify for a temporary permit? To qualify for a temporary permit, you must:

(1) Have an active state-issued journeyman plumbers or a residential specialty plumber certificate;

(2) Give the department sufficient qualifying evidence for a journeyman plumber or a residential specialty plumber certificate of competency;

(3) Never have taken the journeyman or a residential specialty plumber competency examination in Washington state; and

(4) Not be an apprentice plumber.

[Statutory Authority: RCW 18.106.040, 18.106.140, 2002 c 82, and 2003 c 399. 04-12-046, § 296-400A-031, filed 5/28/04, effective 6/30/04. Statutory Authority: RCW 18.106.040, 18.106.140, 2001 c 281, and chapter 18.106 RCW. 02-14-074, § 296-400A-031, filed 6/28/02, effective 7/1/02. Statutory Authority: Chapter 18.106 RCW. 98-13-126, § 296-400A-031, filed 6/17/98, effective 7/20/98. Statutory Authority: RCW 18.106.050, [18.106.]070, [18.106.]110, [18.106.]125, [18.106.]140 and [18.106.]270. 97-11-052, § 296-400A-031, filed 5/20/97, effective 6/30/97.]

WAC 296-400A-032 How do I obtain a temporary permit? If you qualify, you can obtain a temporary permit by applying to the department and paying both the examination application fee and the temporary permit fee shown in WAC 296-400A-045.

[Statutory Authority: RCW 18.106.050, [18.106.]070, [18.106.]110, [18.106.]125, [18.106.]140 and [18.106.]270. 97-11-052, § 296-400A-032, filed 5/20/97, effective 6/30/97.]

WAC 296-400A-033 What is the duration of a temporary permit? A temporary permit is valid for ninety days and is nonrenewable.

[Statutory Authority: RCW 18.106.050, [18.106.]070, [18.106.]110, [18.106.]125, [18.106.]140 and [18.106.]270. 97-11-052, § 296-400A-033, filed 5/20/97, effective 6/30/97.]

WAC 296-400A-035 How can I be placed on inactive status? To be placed on inactive status, you must meet these three requirements:

(1) You must currently be a certified plumber;

(2) Have your inactive status request submitted and approved by the department prior to the expiration date of your plumbing certificate; and

(3) Not be working in the plumbing trade.

Inactive status means that you are not currently working in the plumbing trade and you are not required to pay the annual certificate renewal fee. If you have been in inactive status for less than five years, you may return to active status, without reexamination, by paying the reinstatement fee shown in WAC 296-400A-045. If you have been in inactive status for five or more years, you are required to reapply and pass the competency examination pursuant to WAC 296-400A-020 and pay the appropriate fees shown in WAC 296-400A-045.

(4) Required to meet a minimum of sixteen hours continuing education with four of the hours being in electrical training before being reinstated.

[Statutory Authority: RCW 18.106.040, 18.106.140, 2002 c 82, and 2003 c 399. 04-12-046, § 296-400A-035, filed 5/28/04, effective 6/30/04. Statutory

Authority: RCW 18.106.040, 18.106.140, 2001 c 281, and chapter 18.106 RCW. 02-14-074, § 296-400A-035, filed 6/28/02, effective 7/1/02. Statutory Authority: Chapter 18.106 RCW. 98-13-126, § 296-400A-035, filed 6/17/98, effective 7/20/98. Statutory Authority: RCW 18.106.050, [18.106.]070, [18.106.]110, [18.106.]125, [18.106.]140 and [18.106.]270. 97-11-052, § 296-400A-035, filed 5/20/97, effective 6/30/97.]

WAC 296-400A-045 What fees will I have to pay? The following are the department's plumbers fees:

(1) Fees related to journeyman and specialty plumber certification:

Type of Fee	Period Covered by Fee	Dollar Amount of Fee
Examination application	Per examination	$115.30
Reciprocity application*	Per application	$115.30
Trainee certificate**	One year	$34.50
Temporary permit (not applicable for backflow assembly maintenance and repair specialty)	90 days	$57.40
Journeyman or residential specialty certificate***	Two years (fee may be prorated based on months)	$92.40
Backflow assembly maintenance and repair specialty certificate	Two years (fee may be prorated based on months)	$63.80
Medical gas endorsement examination application	Per application	$42.60
Medical gas endorsement***	One year	$31.80
Medical gas endorsement examination fee****		See note below.
Medical gas endorsement training course fee*****		See note below.
Reinstatement fee for residential and journeyman certificates		$184.90
Reinstatement fee for backflow assembly maintenance and repair specialty certificates		$106.50
Replacement fee for all certificates		$15.80
Refund processing fee		$25.00
Unsupervised trainee endorsement		$25.00
Inactive status fee		$25.00
Certified letter fee		$25.00
Continuing education new course fee******		$150.00
Continuing education renewal course fee******		$75.00
Continuing education classes provided by the department		$12 per continuing education training hour $8 per continuing education training hour for correspondence and internet courses

* Reciprocity application is only allowed for applicants that are applying work experience toward certification that was obtained in state(s) with which the department has a reciprocity agreement.

** The trainee certificate shall expire one year from the date of issuance and must be renewed on or before the date of expiration.

*** This fee applies to either the original issuance or a renewal of a certificate. If you have passed the plumbers certificate of competency examination or the medical gas piping installer endorsement examination and paid the certificate fee, you will be issued a plumber certificate of competency or a medical gas endorsement that will expire on your birth date.

The annual renewal of a Medical Gas Piping Installer Endorsement shall include a continuity affidavit verifying that brazing work has been performed within the past year.

**** This fee is paid directly to a nationally recognized testing agency under contract with the department. It covers the cost of preparing and administering the written competency examination and the materials necessary to conduct the practical competency examination required for the medical gas piping system installers endorsement. **This fee is not paid to the department.**

***** This fee is paid directly to a training course provider approved by the department, in consultation with the state advisory board of plumbers. It covers the cost of providing training courses required for the medical gas piping system installer endorsement. **This fee is not paid to the department.**

****** This fee is for a three-year period or code cycle.

(2) If your birth year is:

(a) In an even-numbered year, your certificate will expire on your birth date in the next even-numbered year.

(b) In an odd-numbered year, your certificate will expire on your birth date in the next odd-numbered year.

[Statutory Authority: RCW 18.106.040, 18.106.140, 2002 c 82, and 2003 c 399. 04-12-046, § 296-400A-045, filed 5/28/04, effective 6/30/04. Statutory Authority: RCW 43.22.350, 43.22.434, 43.22.480, 43.22.500, 70.87.030, 18.106.070, 18.106.125, 2001 c 7, and chapters 18.106, 43.22, and 70.87 RCW. 03-12-045, § 296-400A-045, filed 5/30/03, effective 6/30/03. Statutory Authority: RCW 18.106.040, 18.106.140, 2001 c 281, and chapter 18.106 RCW. 02-14-074, § 296-400A-045, filed 6/28/02, effective 7/1/02. Statutory Authority: RCW 18.106.125. 99-07-101, § 296-400A-045, filed 3/23/99, effective 4/23/99. Statutory Authority: Chapter 18.106 RCW. 98-13-126, § 296-400A-045, filed 6/17/98, effective 7/20/98. Statutory Authority: Chapters 18.106, 18.27 and 43.22 RCW. 98-12-041, § 296-400A-045, filed 5/29/98, effective 6/30/98. Statutory Authority: RCW 18.106.050, [18.106.]070, [18.106.]110, [18.106.]125, [18.106.]140 and [18.106.]270. 97-11-052, § 296-400A-045, filed 5/20/97, effective 6/30/97.]

WAC 296-400A-050 When does the advisory board of plumbers meet? The advisory board of plumbers meets every quarter on the third Tuesday of January, April, July and October.

[Statutory Authority: RCW 18.106.050, [18.106.]070, [18.106.]110, [18.106.]125, [18.106.]140 and [18.106.]270. 97-11-052, § 296-400A-050, filed 5/20/97, effective 6/30/97.]

WAC 296-400A-070 Can I work as a certified plumber in Washington without taking the Washington state plumbers' competency examination? You may be eligible to work in Washington state without taking an examination if:

(1) You have a current plumbers certificate or license from another state; and

(2) That state has a current reciprocal agreement with the department of labor and industries; and

(3) You pay the reciprocity application fee and journeyman or specialty certificate fee shown in WAC 296-400A-045.

The director of labor and industries negotiates reciprocal agreements with states that have equivalent requirements for certification and licensing of journeyman and specialty plumbers. The agreement allows plumbers from those states to work in Washington and Washington-certified plumbers to work in the other state without taking competency examinations. To find out if your state has an agreement with the department, contact the plumber's certification clerk at the department's Tumwater, WA headquarters.

Reciprocity agreements cannot be used to take the Washington state competency examination instead of the examination in your home state.

(4)(a) Those actively certified by the department of health on or before July 1, 2001, as backflow assembly testers and registered as a contractor under chapter 18.27 RCW or employed by a registered contractor, may perform maintenance and repair of backflow prevention assemblies, without being a certified plumber under chapter 18.106 RCW and these rules, until January 1, 2003.

(b) After January 1, 2003, backflow assembly testers exempted under (a) of this subsection are required to meet the eligibility requirements for a specialty plumber's certificate of competency under chapter 18.106 RCW and these rules.

[Statutory Authority: RCW 18.106.040, 18.106.140, 2001 c 281, and chapter 18.106 RCW. 02-14-074, § 296-400A-070, filed 6/28/02, effective 7/1/02. Statutory Authority: Chapter 18.106 RCW. 98-13-126, § 296-400A-070, filed 6/17/98, effective 7/20/98. Statutory Authority: RCW 18.106.050, [18.106.]070, [18.106.]110, [18.106.]125, [18.106.]140 and [18.106.]270. 97-11-052, § 296-400A-070, filed 5/20/97, effective 6/30/97.]

WAC 296-400A-100 For certification purposes, how are "years of employment" computed and documented? (1) For certification purposes, 2,000 hours of employment is considered one year. See RCW 18.106.070(2).

(2) When you renew your certificate, you must document your previous years' plumbing work by accurately completing the department's approved form and submitting it to the department.

(3) If you have completed a one, two, three, four or more years plumbing construction trainee program, you must have the necessary training hours for the year in which you are registered. See RCW 18.106.040.

(4) Subsections (1) through (3) of this section do not apply to the backflow assembly maintenance and repair specialty certification as years of employment are not required for this specialty. Applicants for this specialty designation are required to have fulfilled the requirements in WAC 296-400A-122 and pay the applicable fees in WAC 296-400A-045(2).

(5) Experience obtained as a backflow assembly maintenance and repair specialty may not be applied toward journeyman or specialty plumber certification.

[Statutory Authority: RCW 18.106.040, 18.106.140, 2001 c 281, and chapter 18.106 RCW. 02-14-074, § 296-400A-100, filed 6/28/02, effective 7/1/02. Statutory Authority: RCW 18.106.050, [18.106.]070, [18.106.]110, [18.106.]125, [18.106.]140 and [18.106.]270. 97-11-052, § 296-400A-100, filed 5/20/97, effective 6/30/97.]

WAC 296-400A-110 Does previous work experience count toward my trainee certificate? If your work experience was in plumbing construction, you will be given credit for all verifiable hours that are properly submitted on the department's approved form. Plumber trainee hours accumulated in the state of Washington will be credited only if an active Washington state trainee card was in place when the work occurred. (Refer to the definition of "plumbing" in WAC 296-400A-005.)

[Statutory Authority: Chapter 18.106 RCW. 98-13-126, § 296-400A-110, filed 6/17/98, effective 7/20/98. Statutory Authority: RCW 18.106.050, [18.106.]070, [18.106.]110, [18.106.]125, [18.106.]140 and [18.106.]270. 97-11-052, § 296-400A-110, filed 5/20/97, effective 6/30/97.]

WAC 296-400A-120 What do I need to know about plumber trainee certificates (excluding backflow assembly maintenance and repair specialty certification)? (1) **Journeyman and specialty plumber trainee certification:**

(a) The department issues separate trainee certificates once a year.

(b) The plumbing trainee may not apply for renewal more than ninety days prior to the expiration date. Renewed certificates are valid for one year.

(c) All applicants for trainee certificate of renewal must:

(i) Submit a complete renewal application;

(ii) Pay all appropriate fees; and

(iii) Provide accurate evidence on the renewal form that the individual has completed the continuing education requirements described in chapter 296-400A WAC.

(d) If an individual files inaccurate or false evidence of continuing education information when renewing a plumbing trainee certificate, the individual's certificate may be suspended or revoked.

(e) An individual who has not completed the required hours of continuing education cannot renew a trainee certificate.

(f) Individuals will not be able to apply to test for journeyman or specialty residential plumber certificates until the continuing education requirements have been met.

(g) If continuing education hours have not been met, trainee certificates will become expired and any experience obtained by the trainee in expired status will not be credited toward plumbing certificate application.

(h) An individual may renew an expired certificate of competency by submitting a complete renewal application including obtaining and submitting the continuing education required for renewal. However, the certificate will remain in an expired status for the duration of the expired period.

(i) An individual may not renew a revoked trainee certificate.

(j) Apprentices registered in an approved program according to chapter 49.04 RCW who are obtaining classroom training consistent with the continuing education requirements under chapter 18.106 RCW and this chapter, as approved by the department, are deemed to have met the continuing education requirements necessary to renew a trainee certificate.

(k) If you are a trainee applying for a journeyman certificate, you must complete a minimum of two of the required four years in commercial plumbing experience.

(l) A certified residential specialty plumber working on a commercial job site may work as a journeyman trainee only if they have a current trainee certificate on their person while performing commercial plumbing work.

(m) On a job site, the ratio of certified plumbers to noncertified plumbers must be:

(i) One residential specialty plumber or journeyman working on a residential plumbing job site may supervise no more than two trainees.

(ii) One journeyman plumber working on a commercial job site may supervise no more than one trainee or one residential specialty plumber who holds a current trainee certificate.

(n) A plumber trainee who has a current trainee certificate with the state of Washington and has successfully completed or is enrolled in an approved medical gas piping installer training course may work on medical gas piping systems. Work may only occur when there is direct supervision by an active Washington state certified journeyman plumber with an active medical gas piping installer endorsement issued by the department. Supervision must be one hundred percent of the working day on a one-to-one ratio.

(2) **Trainee work hours.** Trainees shall renew the certificate annually but not more than ninety days before the expiration date.

(a) An annual fee shall be charged for the issuance or renewal of the certificate.

(b) The trainee will not be issued a renewed or reinstated training certificate if the individual owes the department money as a result of an outstanding final judgment.

(c) Trainee hours will not be credited if the trainee owes outstanding penalties for violations of this chapter.

(3) At the time of renewal, the holder shall provide the department with an accurate list of the holder's employers in the plumbing construction industry for the previous annual period. The individual must submit a completed, signed, and notarized affidavit(s) of experience. The affidavit of experience must accurately attest to:

(a) The plumbing installation work performed for each employer the individual worked for in the plumbing trade during the previous period;

(b) The correct plumbing category the individual worked in; and

(c) The actual number of hours worked in each category, worked under the proper supervision of a Washington certified journeyman plumber or residential specialty plumber.

(4) The trainee should ask each employer and/or apprenticeship-training director for an accurately completed, signed, and notarized affidavit of experience for the previous certification period. The employer(s) or apprenticeship training director(s) must provide the previous period's affidavit of experience to the individual within twenty days of the request.

(5) If hours for previous period are not submitted within the thirty days after renewing a plumbing training certificate, the individual may not receive credit for these previous period hours.

[Statutory Authority: RCW 18.106.040, 18.106.140, 2002 c 82, and 2003 c 399. 04-12-046, § 296-400A-120, filed 5/28/04, effective 6/30/04. Statutory Authority: RCW 18.106.040, 18.106.140, 2001 c 281, and chapter 18.106 RCW. 02-14-074, § 296-400A-120, filed 6/28/02, effective 7/1/02. Statutory Authority: Chapter 18.106 RCW. 98-13-126, § 296-400A-120, filed 6/17/98, effective 7/20/98. Statutory Authority: RCW 18.106.050, [18.106.]070, [18.106.]110, [18.106.]125, [18.106.]140 and [18.106.]270. 97-11-052, § 296-400A-120, filed 5/20/97, effective 6/30/97.]

WAC 296-400A-121 What do I need to know about trainee experience and plumber examination requirements for the journeyman and specialty plumber (excluding the backflow assembly maintenance and repair specialty)? (1) If you possess a trainee certificate:

(a) You may take the residential specialty plumber examination after completing 6,000 hours of documented training.

(b) You may take the journeyman examination after completing 8,000 hours of documented training which must include 4,000 hours of commercial plumbing experience.

(2) All journeyman trainees must work under the direct supervision of a journeyman plumber until they have completed 8,000 hours of training.

When 8,000 training hours have been completed, the trainee must take the journeyman examination. Any trainee who has failed the journeyman plumber examination cannot retake the examination for at least one month and must work under the direct supervision of a journeyman plumber until the examination is passed.

(3) To be eligible for the residential specialty plumber's examination, a residential specialty trainee must complete 6,000 hours of training under the direct supervision of either a certified specialty plumber or a journeyman plumber. Any residential specialty trainee who has failed the residential specialty examination, cannot retake the examination for at least one month and must work under the direct supervision of a certified plumber until the examination is passed.

(4) Effective January 1, 2005, all plumber trainees will be required to meet the current hour requirements to test.

(5) **Apprentice/trade school endorsement requirements.** An individual who has a current journeyman or residential specialty plumber trainee certificate and who has successfully completed or is currently enrolled in an approved apprenticeship program or in a technical school program in the plumbing construction trade in a school approved by the work force training and education coordinating board, may work without direct on-site supervision during the last six months of meeting the practical experience requirements of this chapter. In order to work without direct on-site supervision applicable to the type (residential or journeyman) of training hours for which certification is being sought by the individual. This individual must obtain an apprentice/trade school trainee endorsement by submitting the applicable forms provided by the department and paying the applicable fees. This individual may work without direct on-site supervision until he or she receives the remaining hours required to

be eligible to take the applicable examination. This individual may not supervise trainees. (See RCW 18.106.070.)

(6) **Any applicant** (trainee, specialty plumber or journeyman) who fails an examination, will be required to wait at least until the next scheduled examination date and location. Examinations are held the first Thursday of every month, unless that date falls on a holiday. Applications shall be submitted and received by the plumbing certification program office two weeks before the next scheduled date.

[Statutory Authority: RCW 18.106.040, 18.106.140, 2002 c 82, and 2003 c 399. 04-12-046, § 296-400A-121, filed 5/28/04, effective 6/30/04. Statutory Authority: RCW 18.106.040, 18.106.140, 2001 c 281, and chapter 18.106 RCW. 02-14-074, § 296-400A-121, filed 6/28/02, effective 7/1/02. Statutory Authority: RCW 18.106.050, [18.106.]070, [18.106.]110, [18.106.]125, [18.106.]140 and [18.106.]270. 97-11-052, § 296-400A-121, filed 5/20/97, effective 6/30/97.]

WAC 296-400A-122 What do I need to know about trainee experience and the backflow assembly maintenance and repair specialty examination requirements? (1) A trainee certificate must be obtained by an individual performing backflow assembly maintenance and repair work who is not a certified plumber. The individual must work under the direct supervision of a certified backflow assembly maintenance and repair specialty, journeyman plumber, or residential specialty plumber for a minimum of one hundred percent of each working day while the backflow assembly maintenance and repair work is being performed.

(2) Each applicant for a backflow assembly maintenance and repair specialty certificate must furnish written evidence that he or she has a valid backflow assembly tester certification administered and enforced by the department of health.

(3) **Any applicant** who fails an examination will be required to wait at least until the next scheduled examination date and location. Examinations are held the first Thursday of every month, unless that date falls on a holiday. In the event of a holiday, the examination will be held on the second Thursday of the month. Applications shall be submitted and received by the plumbing certification program office two weeks before the next scheduled examination date.

[Statutory Authority: RCW 18.106.040, 18.106.140, 2002 c 82, and 2003 c 399. 04-12-046, § 296-400A-122, filed 5/28/04, effective 6/30/04. Statutory Authority: RCW 18.106.040, 18.106.140, 2001 c 281, and chapter 18.106 RCW. 02-14-074, § 296-400A-122, filed 6/28/02, effective 7/1/02.]

WAC 296-400A-130 What if I make a false statement or a material misrepresentation on an application, an employment report or a trainee certificate? (1) All required applications and annual statements of employment hours are made under oath. Making false statements and/or material misrepresentations carry serious consequences. Any person who knowingly makes a false statement or material misrepresentation on an application, an affidavit of experience or a trainee certificate may have their certificate suspended, revoked, and/or be referred to the county prosecutor for criminal prosecution. In addition, the department may issue an infraction for a violation of this chapter.

(2) The annual statements of employment described in subsection (1) of this section do not apply to the backflow assembly maintenance and repair specialty certification.

[Statutory Authority: RCW 18.106.040, 18.106.140, 2002 c 82, and 2003 c 399. 04-12-046, § 296-400A-130, filed 5/28/04, effective 6/30/04. Statutory Authority: RCW 18.106.040, 18.106.140, 2001 c 281, and chapter 18.106 RCW. 02-14-074, § 296-400A-130, filed 6/28/02, effective 7/1/02. Statutory Authority: RCW 18.106.050, [18.106.]070, [18.106.]110, [18.106.]125, [18.106.]140 and [18.106.]270. 97-11-052, § 296-400A-130, filed 5/20/97, effective 6/30/97.]

WAC 296-400A-135 How does the department enforce trainee supervision? (1) A journeyman plumber on each and every commercial job site shall supervise either a residential specialty plumber with a current plumber trainee card or trainee with a current plumber trainee card.

(a) The ratio on each commercial site shall be not more than one residential plumber or one plumber trainee working on any one job site for every certified journeyman plumber working as a journeyman plumber on that site.

(b) The time of supervision shall be a minimum of seventy-five percent of the time spent on each and every job site.

(2) A journeyman plumber or residential specialty plumber on each and every residential specialty job site shall supervise a plumber trainee with a current plumber trainee card.

(a) The ratio on each residential specialty job site shall be not more than two trainees with current plumber trainee cards on any one residential specialty job site for every certified journeyman plumber or residential specialty plumber on that site.

(b) The time of supervision shall be a minimum of seventy-five percent of the time spent on each and every job site.

(3) A journeyman plumber with current medical gas endorsement may supervise either a residential specialty plumber with a current trainee card or a plumber trainee with a current trainee card.

(a) The residential specialty plumber or the plumber trainee has to have successfully completed or is currently enrolled in an approved medical gas piping installer training course approved by the department.

(b) The residential specialty plumber or other plumber trainee is under the direct supervision of a certified medical gas journeyman plumber on one-to-one ratio for one hundred percent of the time on each and every medical gas site.

(4) A backflow specialty plumber, a journeyman plumber or a residential specialty plumber shall supervise a backflow trainee to do maintenance and repair work on every backflow assembly on potable water systems, inside every commercial or residential building. The ratio shall be one-to-one for one hundred percent of the time on every job site.

[Statutory Authority: RCW 18.106.040, 18.106.140, 2002 c 82, and 2003 c 399. 04-12-046, § 296-400A-135, filed 5/28/04, effective 6/30/04.]

WAC 296-400A-140 How does the department enforce plumbers certification requirements? The department enforces plumber certification requirements by means of job-site inspections conducted by an authorized representative of the department. The representative must determine whether:

(1) Each person doing plumbing work has a proper certificate on their person; and

(2) The ratio of certified specialty and/or journeyman plumbers to certified trainees is correct; and

(3) Each certified trainee is directly supervised by either a certified specialty plumber or a certified journeyman; and

(4) Persons who are installing medical gas piping systems have active medical gas piping installer endorsements in addition to their active plumber certification.

(5) Persons who are certified as backflow assembly maintenance and repair specialties must have an active backflow assembly tester certification from the department of health.

[Statutory Authority: RCW 18.106.040, 18.106.140, 2002 c 82, and 2003 c 399. 04-12-046, § 296-400A-140, filed 5/28/04, effective 6/30/04. Statutory Authority: RCW 18.106.040, 18.106.140, 2001 c 281, and chapter 18.106 RCW. 02-14-074, § 296-400A-140, filed 6/28/02, effective 7/1/02. Statutory Authority: Chapter 18.106 RCW. 98-13-126, § 296-400A-140, filed 6/17/98, effective 7/20/98. Statutory Authority: RCW 18.106.050, [18.106.]070, [18.106.]110, [18.106.]125, [18.106.]140 and [18.106.]270. 97-11-052, § 296-400A-140, filed 5/20/97, effective 6/30/97.]

WAC 296-400A-150 May the department audit the records of a contractor? Yes, for any reason such as: Dispatching, ratio, supervision, excessive hours, and certification. The department may audit the records of contractors as authorized under RCW 18.106.320 when the department has reason to believe that a violation of the plumbing certification laws has occurred.

[Statutory Authority: RCW 18.106.040, 18.106.140, 2002 c 82, and 2003 c 399. 04-12-046, § 296-400A-150, filed 5/28/04, effective 6/30/04.]

WAC 296-400A-155 Audit of trainee hours. (1) The department, under RCW 18.106.320, may audit the employment records of the plumbing contractor or employer who verified the plumbing trainee hours.

(2) Every contractor must keep a record of trainee employment so the department may obtain the necessary information to verify plumbing trainee work experience.

(a) The contractor must keep the records of jobs performed for a least five years.

(b) Upon request, these records must be made available to the department for inspection within seven business days.

(3) The contractor must maintain time cards or similar records to verify:

(a) The number of hours the trainee worked as a supervised trainee by category.

(b) The type of plumbing work the trainee performed (e.g., commercial or residential).

(4) Any information obtained from the trainee's contractor or employer during the audit under the provisions of RCW 18.106.320 is confidential and is not open to public inspection under chapter 42.17 RCW.

(5) The department's audit may include, but will not be limited to, the following:

(a) An audit to determine whether the trainee was employed by the contractor or employer during the period for which the hours were submitted, the actual number of hours the trainee worked, and the category of plumbing work performed; and

(b) An audit covering a specific time period and examination of a contractor's or employer's books and records which may include their reporting of the trainee's payroll hours required for industrial insurance, employment security or prevailing wage purposes.

[Statutory Authority: RCW 18.106.040, 18.106.140, 2002 c 82, and 2003 c 399. 04-12-046, § 296-400A-155, filed 5/28/04, effective 6/30/04.]

WAC 296-400A-300 What procedures does the department follow when issuing a notice of infraction? (1) If an authorized representative of the department determines that an individual has violated plumber certification requirements, including medical gas piping installer endorsement requirements, the department must issue a notice of infraction describing the reasons for the infraction.

(2) For plumber certification violations, the department may issue a notice of infraction to either:

(a) An individual who is plumbing without a current plumber certificate; or

(b) The employer of the individual who is plumbing without a current plumber certificate; or

(c) The employer's authorizing agent or foreman that made the work assignment to the individual who is plumbing without a current plumber certificate.

(3) For medical gas piping installer endorsement violations, the department may issue a notice of infraction to either:

(a) An individual who is installing medical gas piping systems without a current plumber certificate and a current medical gas piping installer endorsement; or

(b) The employer of the individual who is installing medical gas piping systems without a current plumber certificate and a current medical gas piping installer endorsement; or

(c) The employer's authorizing agent or foreman that made the work assignment to the individual who is installing medical gas piping systems without a current plumber certificate and a current medical gas piping installer endorsement.

(4) The department may issue an infraction to a contractor advertising or performing work under this chapter or chapter 18.27 RCW who is not properly registered under chapter 18.27 RCW.

(5) An individual may appeal a notice of infraction by complying with the appropriate provisions of RCW 18.106.-220.

(6) If good cause is shown, an administrative law judge may waive, reduce or suspend any monetary penalties resulting from the infraction.

(7) Any monetary penalties collected under this chapter, must be deposited in the plumbing certificate fund.

[Statutory Authority: RCW 18.106.040, 18.106.140, 2002 c 82, and 2003 c 399. 04-12-046, § 296-400A-300, filed 5/28/04, effective 6/30/04. Statutory Authority: Chapter 18.106 RCW. 98-13-126, § 296-400A-300, filed 6/17/98, effective 7/20/98. Statutory Authority: RCW 18.106.050, [18.106.]070, [18.106.]110, [18.106.]125, [18.106.]140 and [18.106.]270. 97-11-052, § 296-400A-300, filed 5/20/97, effective 6/30/97.]

WAC 296-400A-400 What are the monetary penalties for violating certification requirements? (1) A person cited for an infraction under RCW 18.106.020 or 18.106.320 shall be assessed a monetary penalty based upon the following schedule:

(a) Individual

First Infraction	$250.00
Second Infraction	$500.00
Third Infraction	$750.00
Fourth and each additional infraction	Not more than $1,000.00

(b) Contractor or dispatcher

First Infraction	$250.00
Second Infraction	$500.00
Third and each additional infraction	Not more than $1,000.00

(2) Each day a person is in violation is considered a separate infraction.

(3) Each job site at which a person is in violation is considered a separate infraction.

[Statutory Authority: RCW 18.106.040, 18.106.140, 2002 c 82, and 2003 c 399. 04-12-046, § 296-400A-400, filed 5/28/04, effective 6/30/04. Statutory Authority: RCW 18.106.050, [18.106.]070, [18.106.]110, [18.106.]125, [18.106.]140 and [18.106.]270. 97-11-052, § 296-400A-400, filed 5/20/97, effective 6/30/97.]

WAC 296-400A-425 What if I owe outstanding penalties related to a department issued plumber infraction? The department may deny your application or renewal of your certificate or endorsement if you owe outstanding penalties. The department must notify you of their denial by registered mail, return receipt requested. This notice of denial will be mailed to the address on your application.

Upon receipt of the notice, you have twenty days to file a notice of appeal with the department. Your notice of appeal must be accompanied by a certified check for two hundred dollars. This amount will be returned to you if the department's decision is not upheld by the hearings officer. If the hearings officer upholds the department's decision, the two hundred dollars will be applied to the cost of the hearing.

The office of administrative hearings shall conduct the hearing under chapter 34.05 RCW.

[Statutory Authority: RCW 18.106.040, 18.106.140, 2002 c 82, and 2003 c 399. 04-12-046, § 296-400A-425, filed 5/28/04, effective 6/30/04. Statutory Authority: RCW 18.106.050, [18.106.]070, [18.106.]110, [18.106.]125, [18.106.]140 and [18.106.]270. 97-11-052, § 296-400A-425, filed 5/20/97, effective 6/30/97.]

WAC 296-400A-430 If I am a certified backflow assembly maintenance and repair, journeyman, or specialty plumber do I need to be a registered contractor under chapter 18.27 RCW? Anyone who advertises, offers to do work, submits a bid, or performs any work under chapter 18.106 RCW and these rules must be a registered contractor as required under chapter 18.27 RCW, or an employee of such a registered contractor, with wages as their sole compensation.

[Statutory Authority: RCW 18.106.040, 18.106.140, 2001 c 281, and chapter 18.106 RCW. 02-14-074, § 296-400A-430, filed 6/28/02, effective 7/1/02.]

Chapter 296-403A WAC
AMUSEMENT RIDES OR STRUCTURES

(Formerly chapter 296-403 WAC)

WAC

296-403A-100	Definitions.
296-403A-110	Insurance.
296-403A-120	Application for and renewal of operating permit.
296-403A-130	Operating permit.
296-403A-140	Temporary operating permit.
296-403A-150	Fees.
296-403A-160	Appeals.
296-403A-170	Amusement ride inspector qualifications.
296-403A-180	Safety and maintenance seminar.
296-403A-190	Safety standards for amusement rides and amusement structures.
296-403A-195	Incident reporting.
296-403A-200	Reciprocal certificate.
296-403A-210	Revocation and suspension of certification of amusement ride inspectors—Reinstatement.
296-403A-220	Fees for examination, certification, and renewal of certification for inspectors.
296-403A-230	Electrical requirements for amusement rides and amusement structures.
296-403A-240	Department on-site electrical inspection.

WAC 296-403A-100 Definitions. Definitions as found in ASTM F 747-97 Standard Terminology Related to Amusement Rides and Devices are adopted in addition to the following:

(1) **"Air supported"** structure or device means an amusement device that incorporates a structural and mechanical system and employs a high-strength fabric or film that achieves its strength, shape and stability by pretensioning with internal air pressure (inflation).

(2) **"Amusement ride"** means any vehicle, boat, or other mechanical or air supported device moving upon or within a structure, along cables or rails, through the air by centrifugal force or otherwise, or across water, that is used to convey one or more individuals for amusement, entertainment, diversion, or recreation. For purposes of this chapter, "boats" does not refer to personal watercraft or vessels operated on the waters of this state according to chapter 79A.60 RCW. Examples of an amusement ride include, but are not limited to, devices commonly known as skyrides, ferris wheels, carousels, parachute towers, tunnels of love, roller coasters, mechanical bulls, gyrotron, space balls, bungee operated, simulators and similar devices.

Conveyances for persons in recreational winter sports activities such as: Ski lifts, ski tows, j-bars, t-bars, and similar devices subject to regulation under chapter 70.88 RCW are not amusement rides. Any single-passenger coin-operated ride that is manually, mechanically, or electrically operated and customarily placed in a public location that does not normally require the supervision or services of an operator is not an amusement ride. Nonmechanized playground equipment including, but not limited to, swings, seesaws, stationary spring-mounted animal features, rider-propelled merry-go-rounds, climbers, slides, trampolines, and physical fitness devices are not amusement rides. Permanent water slides are not amusement rides. Animal rides such as: Pony rides, riding stables, hay rides and elephant rides are not amusement rides.

(a) **"Portable amusement ride"** means an amusement ride which is relocated at least once per year with or without disassembly.

(b) **"Permanent amusement ride"** means an amusement ride which is erected to remain a lasting part of the premises.

(3) **"Amusement structure"** means any electrical, mechanical, nonmechanical, or air-supported device or any combinations thereof operated for revenue and to provide amusement or entertainment to viewers or audiences at carnivals, fairs, or amusement parks. A game or concession where a member of the public performs an act or makes a purchase is not an amusement structure. Examples of an amusement structure include, but are not limited to, structures commonly known as permanent steel or wooden roller coasters, a permanent dark ride or fun house, a permanent drop tower, or a permanent building enclosing a portable amusement device.

(4) **"ASTM"** means the American Society for Testing and Materials (F-24 committee) as it relates to amusement rides and devices. Copies of the ASTM are available from ASTM International, 100 Barr Harbor Drive, P.O. Box C700, West Conshohocken, Pennsylvania 19428-2959.

(5) **"Authority having jurisdiction"** means the department.

(6) **"Carnival"** means a mobile enterprise principally devoted to offering amusement or entertainment to patrons in, upon, or by means of portable amusement rides or structures.

(7) **"Certificate of inspection"** means a document given under oath or affirmation from an insurer or a person with whom the insurer has contracted to make a safety inspection of the amusement ride or structure. The certificate must contain: The name, address and signature of the inspector, the complete description of the amusement ride or structure and the name and address of the owner or operator.

(8) **"Certificate of insurance"** means a document certifying that the insurance required by chapter 67.42 RCW is in effect. Copies of this document/form are available from the department upon request.

(9) **"Department"** means the department of labor and industries.

(10) **"Insurance policy"** means an insurance policy written by an insurer authorized to do business in this state under Title 48 RCW.

(11) **"Major modification"** means any change to the original configuration or layout of components or replacement of components that are not like-for-like.

(12) **"NEC"** means the 2002 edition of the National Electrical Code (NFPA 70-2002) including Annex A, B, and C, but excluding Article 80. Copies of the NEC, NFPA 70-2002 are available from the NFPA (National Fire Protection Association), 1 Batterymarch Park, Quincy, Massachusetts 02169-7471.

(13) **"Operating permit"** means a permit that is issued by the department.

(14) **"Operating permit decal"** is a decal issued by the department that must be affixed on or adjacent to the control panel of the amusement ride or structure in a location visible to the patrons of the ride or structure.

(15) **"RCW"** means the *Revised Code of Washington*. Copies of RCWs are available from the office of the code reviser.

(16) **"Safety inspection"** means a procedure to be conducted by a safety inspector to determine whether an amusement ride or device is assembled, maintained, tested, operated, and inspected in accordance with the current ASTM standards, the manufacturer's or insurer's standards, and this chapter, whichever is the most stringent, and that determines the current operational safety of the ride or device.

(17) **"Safety inspector"** and **"amusement ride inspector"** both mean a third-party inspector authorized by the department to conduct safety inspections of amusement rides or devices in compliance with this chapter. The inspector must be an independent, third party with no organizational, managerial, financial, design, or promotional affiliation with the amusement ride or amusement structure being inspected. The inspector must not be a principal, owner, or employee of any amusement company or manufacturer doing business in the state of Washington, unless authorized by the department to conduct specific inspections on a case-by-case basis.

Inspectors who have installed, modified or repaired an amusement ride or structure may not perform the initial inspection on the equipment they have installed, modified, or repaired. The inspector must have an adequate diversity of clients or activity so that the loss or award of a specific contract regarding amusement ride or amusement structure safety certification would not be a deciding factor in the financial well being of the inspector.

(18) **"WAC"** means the *Washington Administrative Code*. Copies of WACs are available from the department and the office of the code reviser.

[Statutory Authority: RCW 19.28.010, 19.28.031, 19.28.061, 19.28.101, 19.28.171, 19.28.191, 19.28.201, 19.28.251, 19.28.271, 19.28.311, 19.28.321, 67.42.020, 67.42.025, 67.42.050, and chapters 19.28 and 67.42 RCW. 02-21-103, § 296-403A-100, filed 10/22/02, effective 11/22/02.]

WAC 296-403A-110 Insurance. The following are the requirements for insurance for amusement rides and structures:

(1) An original copy of the insurance policy in an amount not less than one million dollars per occurrence from an insurer authorized to do business in the state of Washington must be filed with the department.

(2) A certificate of insurance must be presented to either the sponsor, lessor, landowner or other person responsible for an amusement ride being offered for use by the public.

(3) The insurance company must notify the department at least thirty days before canceling or revoking a policy and upon the nonrenewal of the policy.

(4) If the insurance company withdraws, cancels, revokes, suspends, or excludes coverage of any ride(s) from any policy furnished to the department, such withdrawal, cancellation, revocation, suspension, or exclusion must be plainly stated in documents furnished to the department.

(5) The department must be notified within twenty-four hours of the withdrawal, cancellation, revocation, suspension, or exclusion of insurance coverage of an amusement ride or structure for which an operating permit has been issued by the department.

[Statutory Authority: RCW 19.28.010, 19.28.031, 19.28.061, 19.28.101, 19.28.171, 19.28.191, 19.28.201, 19.28.251, 19.28.271, 19.28.311, 19.28.321, 67.42.020, 67.42.025, 67.42.050, and chapters 19.28 and 67.42 RCW. 02-21-103, § 296-403A-110, filed 10/22/02, effective 11/22/02.]

WAC 296-403A-120 Application for and renewal of operating permit. (1) The person(s) making application for an operating permit for an amusement structure or an amusement ride must provide the following documentation on an application form provided by the department and pay the appropriate fee:

(a) The name, address and telephone number of the owner or operator of the amusement ride or structure together with the name and signature of the applicant.

(b) Description of amusement ride or structure. Each amusement ride or structure must be individually identified:

(i) By a trade name or title and a narrative description from which the amusement structure or ride can be identified; and

(ii) A serial number which is welded onto the frame or contained on an identification plate which is permanently affixed to the amusement structure or ride.

(c) Certificate of inspection. The amusement ride inspector or insurer per RCW 67.42.020(2) must certify that the amusement ride or structure has been inspected for safety and meets the standards for compliance with all applicable requirements of the National Electrical Code and this chapter, manufacturer's specifications, American Society of Testing and Materials (ASTM) Standards on Amusement Rides and Devices, and insurance company inspection requirements.

(d) Amusement rides or structures that undergo major modification must be recertified by an amusement ride inspector or insurer per RCW 67.42.020(2) before being placed into operation.

(2) Renewal of operating permit. An operating permit may be renewed before the expiration date by submitting an application with the proper fee and a certificate of safety inspection. The safety inspection must have been performed within thirty days before the expiration date of the operating permit.

[Statutory Authority: RCW 19.28.010, 19.28.031, 19.28.061, 19.28.101, 19.28.171, 19.28.191, 19.28.201, 19.28.251, 19.28.271, 19.28.311, 19.28.321, 67.42.020, 67.42.025, 67.42.050, and chapters 19.28 and 67.42 RCW. 02-21-103, § 296-403A-120, filed 10/22/02, effective 11/22/02.]

WAC 296-403A-130 Operating permit. An amusement ride or structure must not be operated unless the owner or operator has obtained an operating permit and an operating permit decal is posted on the ride, unless a temporary operating permit has been issued as outlined in WAC 296-403A-140. The owner or operator of the amusement ride or structure must have available for inspection, at the location where the amusement ride or structure is to be operated, a copy of the operating permit for each amusement ride or structure. Each operating permit that has been issued to an owner or operator is valid for one year from the date of issue or the date of inspection whichever is less, unless revoked. The operating permit will become null and void in the event that the insurance policy is canceled or is no longer in effect or if an amusement ride or structure is materially rebuilt or materially modified.

[Statutory Authority: RCW 19.28.010, 19.28.031, 19.28.061, 19.28.101, 19.28.171, 19.28.191, 19.28.201, 19.28.251, 19.28.271, 19.28.311, 19.28.321, 67.42.020, 67.42.025, 67.42.050, and chapters 19.28 and 67.42 RCW. 02-21-103, § 296-403A-130, filed 10/22/02, effective 11/22/02.]

WAC 296-403A-140 Temporary operating permit. A temporary operating permit expires after fifteen days and will not be renewed or extended unless authorized by the chief electrical inspector. The department electrical section may issue a temporary operating permit when:

(1) The insurance policy required by chapter 67.42 RCW is on file with the department; and

(2) The safety inspection of the amusement ride or structure has been performed within the last year; and

(3) The department has received a complete application for an operating permit.

[Statutory Authority: RCW 19.28.010, 19.28.031, 19.28.061, 19.28.101, 19.28.171, 19.28.191, 19.28.201, 19.28.251, 19.28.271, 19.28.311, 19.28.321, 67.42.020, 67.42.025, 67.42.050, and chapters 19.28 and 67.42 RCW. 02-21-103, § 296-403A-140, filed 10/22/02, effective 11/22/02.]

WAC 296-403A-150 Fees. The fee for issuing each operating permit (including bungee jumping operating permits) and operating permit decal is ten dollars.

[Statutory Authority: RCW 19.28.010, 19.28.031, 19.28.061, 19.28.101, 19.28.171, 19.28.191, 19.28.201, 19.28.251, 19.28.271, 19.28.311, 19.28.321, 67.42.020, 67.42.025, 67.42.050, and chapters 19.28 and 67.42 RCW. 02-21-103, § 296-403A-150, filed 10/22/02, effective 11/22/02.]

WAC 296-403A-160 Appeals. (1) Decisions by the department under this chapter can be appealed when:

(a) An operating permit has been denied or revoked.

(b) The department has ordered the cessation of the operation of an amusement ride or structure.

(c) An amusement ride inspector application has been denied, or certificate has been suspended or revoked.

The appeal will be conducted in accordance with chapter 34.05 RCW. An appeal does not stay the decision of the department. The appeal must be filed within twenty days after notice of the decision of the department is sent by certified mail, return receipt requested, or is served upon the owner or operator.

(2) An appeal is made by filing a written notice of appeal with the department's chief electrical inspector and must state the decision by the department that is being appealed and the relief that is desired. The formal appeal must be accompanied by a certified check for two hundred dollars which will be returned to the holder of the certificate or permit if the department's decision is overturned. If the department's decision is not overturned, the two hundred dollars will be applied to pay the costs associated with the appeal, and any balance remaining after payment of per diem and expenses will be paid into the electrical license fund.

(3) All requests for appeals must be filed with the department's chief electrical inspector, Department of Labor and Industries, 7273 Linderson Way, P.O. Box 44460, Olympia, WA 98504-4460. The filings may be submitted by ordinary mail, certified or registered mail, or by personal delivery. The date of filing is the date the paper is actually received in the office of the chief electrical inspector.

(4) See chapter 34.05 RCW and chapter 10-08 WAC for additional information on appeals.

[Statutory Authority: RCW 19.28.010, 19.28.031, 19.28.061, 19.28.101, 19.28.171, 19.28.191, 19.28.201, 19.28.251, 19.28.271, 19.28.311, 19.28.321, 67.42.020, 67.42.025, 67.42.050, and chapters 19.28 and 67.42 RCW. 02-21-103, § 296-403A-160, filed 10/22/02, effective 11/22/02.]

WAC 296-403A-170 Amusement ride inspector qualifications. An amusement ride inspector must meet the following minimum qualifications:

(1) Two years experience with an insurance company as an amusement ride inspector; or

(2) Two years experience inspecting amusement rides and enforcing amusement ride codes while employed by a state or other governmental body regulating amusement rides; or

(3) Not less than five years documented field operating and maintenance experience with amusement rides and devices, including responsibility for erection, assembly, disassembly; personnel supervision responsibility for erection, maintenance, and operating functions; or

(4) Not less than ten years documented practical experience in the design, construction, maintenance, repair, field inspection, and operation of amusement rides and devices as an authorized representative of a recognized amusement ride manufacturer; and

(5) In addition to the above criteria an amusement ride inspector must be certified by the department after demonstrating competency by:

(a) Passing a competency examination administered by the department; or

(b) Passing a test administered by the National Association of Amusement Ride Safety Officials for NAARSO Level II or other certification organizations recognized by the department, as an amusement ride inspector.

Those individuals who are certified by the department before December 31, 2000, will have until December 31, 2003, to take and successfully pass one of the examinations in (a) or (b) of this subsection. Individuals with at least ten years as an amusement ride inspector may become certified without testing if they were certified with the department on December 31, 2000.

(6) An amusement ride inspector may work without certification, as a trainee, if directly and continually supervised during the inspection process by a certified amusement ride inspector.

(7) This section does not apply to insurers or a person with whom the insurer has contracted with per RCW 67.42.020(2).

[Statutory Authority: RCW 19.28.010, 19.28.031, 19.28.061, 19.28.101, 19.28.171, 19.28.191, 19.28.201, 19.28.251, 19.28.271, 19.28.311, 19.28.321, 67.42.020, 67.42.025, 67.42.050, and chapters 19.28 and 67.42 RCW. 02-21-103, § 296-403A-170, filed 10/22/02, effective 11/22/02.]

WAC 296-403A-180 Safety and maintenance seminar. Every amusement ride inspector must annually attend at least one amusement ride safety and maintenance seminar sponsored by the Amusement Industry Manufacturers and Equipment Suppliers, Northwestern Showman's Club, National Association of Amusement Ride Safety Officials, International Association of Amusement Parks and Attractions, or an equivalent approved by the department. All experience and schooling must be documented and verified and must be furnished to the department with an application for an amusement ride inspector certificate.

[Statutory Authority: RCW 19.28.010, 19.28.031, 19.28.061, 19.28.101, 19.28.171, 19.28.191, 19.28.201, 19.28.251, 19.28.271, 19.28.311, 19.28.321, 67.42.020, 67.42.025, 67.42.050, and chapters 19.28 and 67.42 RCW. 02-21-103, § 296-403A-180, filed 10/22/02, effective 11/22/02.]

WAC 296-403A-190 Safety standards for amusement rides and amusement structures. (1) A certified amusement ride inspector will inspect amusement rides and structures for safety. Amusement rides and structures must comply with all applicable requirements of the National Electrical Code and this chapter, manufacturer's specifications, American Society of Testing and Materials (ASTM) Standards on Amusement Rides and Devices, insurance company inspection requirements, and the requirements established by the local authority having jurisdiction.

(2) The amusement ride inspector must verify the correction of all deficiencies noted on the application for an amusement ride operating decal. The correction of any deficiencies must be completed within fifteen calendar days unless the inspector has determined that deficiencies are of a serious nature that will prohibit operation of the amusement ride or amusement structure. The period to correct deficiencies may be extended for a specific period at the discretion of the safety inspector and/or the department. The amusement ride inspector must report to the department any amusement ride or structure that is not allowed to operate because of serious safety deficiencies. Any deficiencies must be reinspected by the amusement ride inspector/company or other qualified inspector/company authorized by the original ride inspector/company.

[Statutory Authority: RCW 19.28.010, 19.28.031, 19.28.061, 19.28.101, 19.28.171, 19.28.191, 19.28.201, 19.28.251, 19.28.271, 19.28.311, 19.28.321, 67.42.020, 67.42.025, 67.42.050, and chapters 19.28 and 67.42 RCW. 02-21-103, § 296-403A-190, filed 10/22/02, effective 11/22/02.]

WAC 296-403A-195 Incident reporting. (1) Amusement structure/ride owner(s) and/or operator(s) must report to the department:

(a) Any incident or accident where evacuation of a ride results from an electrical or mechanical malfunction or when emergency personnel are required to assist in the evacuation; and

(b) Any incident/accident involving an amusement ride or structure involving personal injury that requires medical treatment, other than ordinary first aid. Medical treatment other than ordinary first aid means treatment beyond that which occurs at the location of the incident/accident and is provided by or under the supervision of a physician licensed to practice medicine, and the treatment is in response to a medical concern that is related directly to the incident/accident.

(2) Reports meeting the above criteria must be made in writing within twenty-four hours after any incident/accident. This report may be faxed to a phone number supplied by the department followed by the original report in the mail. The report must include a detailed description of all available facts regarding the incident/accident for review by the department. After review, the department may require the amusement ride or structure to be inspected by an amusement ride inspector before continuing the operation of the ride or structure. When the department revokes a ride operating permit, a complete and detailed account of the incident/accident must be provided to the department before a new operating permit will be issued following an incident/accident.

[Statutory Authority: RCW 19.28.010, 19.28.031, 19.28.061, 19.28.101, 19.28.171, 19.28.191, 19.28.201, 19.28.251, 19.28.271, 19.28.311,

19.28.321, 67.42.020, 67.42.025, 67.42.050, and chapters 19.28 and 67.42 RCW. 02-21-103, § 296-403A-195, filed 10/22/02, effective 11/22/02.]

WAC 296-403A-200 Reciprocal certificate. The department may upon proper application, issue an amusement ride inspector certificate to an individual who meets the minimum qualifications as set forth in this chapter and who possesses a current, valid amusement ride inspector certificate in a state or province which has equal or higher standards for amusement ride inspectors as those contained in this chapter. No amusement ride inspection examination will be required of those persons who qualify for a reciprocal amusement ride inspector certificate.

[Statutory Authority: RCW 19.28.010, 19.28.031, 19.28.061, 19.28.101, 19.28.171, 19.28.191, 19.28.201, 19.28.251, 19.28.271, 19.28.311, 19.28.321, 67.42.020, 67.42.025, 67.42.050, and chapters 19.28 and 67.42 RCW. 02-21-103, § 296-403A-200, filed 10/22/02, effective 11/22/02.]

WAC 296-403A-210 Revocation and suspension of certification of amusement ride inspectors—Reinstatement. (1) An amusement ride inspector's certificate of competency may be suspended or revoked for cause such as: Certifying the safety of an unsafe ride, falsifying records or reports or certifying an amusement ride or structure which he or she has not personally inspected.

(2) The suspension or revocation of a certificate of competency that is not contested will be suspended or revoked immediately. If the suspension or revocation of a certificate of competency is contested, the suspension or revocation will not occur until after a hearing has been held before the department. The inspector and his or her employer are entitled to appear at such hearings and to be heard.

(3) The department must deliver to both the inspector charged and to his or her employer (if known), not less than ten days prior to the hearing, a written notice of the charges and of the time and place of such hearing.

(4) An inspector whose certificate of competency has been suspended may apply for reinstatement not less than ninety days after the time of suspension. If the certificate of competency has been revoked, the inspector will need to reapply for certification according to this chapter.

[Statutory Authority: RCW 19.28.010, 19.28.031, 19.28.061, 19.28.101, 19.28.171, 19.28.191, 19.28.201, 19.28.251, 19.28.271, 19.28.311, 19.28.321, 67.42.020, 67.42.025, 67.42.050, and chapters 19.28 and 67.42 RCW. 02-21-103, § 296-403A-210, filed 10/22/02, effective 11/22/02.]

WAC 296-403A-220 Fees for examination, certification, and renewal of certification for inspectors. (1) Fee for each application for inspector's certificate of competency and examination, one hundred dollars.

(2) Application fee (nonrefundable), twenty dollars.

(3) Fee for annual renewal of certificate of competency or reciprocal inspector certificate, twenty dollars.

[Statutory Authority: RCW 19.28.010, 19.28.031, 19.28.061, 19.28.101, 19.28.171, 19.28.191, 19.28.201, 19.28.251, 19.28.271, 19.28.311, 19.28.321, 67.42.020, 67.42.025, 67.42.050, and chapters 19.28 and 67.42 RCW. 02-21-103, § 296-403A-220, filed 10/22/02, effective 11/22/02.]

WAC 296-403A-230 Electrical requirements for amusement rides and amusement structures. (1) Electrical distribution system. Service equipment, separately derived systems, feeders and circuits for each amusement ride, amusement structure or concession must comply with all applicable requirements of the National Electrical Code and chapter 296-46A WAC, as amended.

(2) Flexible multiconductor cords must be connected to equipment by approved connectors designed for the purpose or by listed cord caps. Individual conductors of multiconductor cords in sizes #2 AWG and larger are permitted to be connected by listed and labeled connection systems in accordance with Article 520-53(k) of the National Electrical Code. Where conductors are connected individually by such connection systems, the outer jacket of multiconductor cord must be secured to the electrical equipment independent from the receptacles and plugs by approved cable grips that are installed in a manner to prevent pressure from being applied to the receptacles and plugs.

(3) Individual, single conductor, insulated, portable power cable, in addition to complying with Section 525-13 of the National Electrical Code, must comply with the following:

(a) All conductors of the feeder or circuit including the equipment grounding conductor must originate in the same electrical equipment and terminate in the same equipment.

(b) All conductors of the feeder or circuit including the ungrounded, grounded, and equipment grounding conductors must run together, except for portions installed within approved cable protection systems.

(c) The cables must be secured to the electrical equipment independent from the cable receptacles and plugs by approved cable grips that prevent pressure from being applied to the connectors.

(d) The cables must be connected to electrical equipment by approved listed and labeled connection systems in compliance with Section 520-53(k) of the National Electrical Code.

(4) Disconnecting means. A separate, enclosed, externally operable fused switch or circuit breaker must be installed on each amusement ride, structure or concession to disconnect all electrical equipment. The disconnecting means must be readily accessible and identified as the disconnecting means. The disconnecting means is not required to be readily accessible when a disconnecting means meeting the requirements of NEC 525-30 is also installed. Where more than one power supply is employed, the disconnecting means must be grouped.

(5) Rotating equipment. Components of amusement rides or structures that rotate more than three hundred sixty degrees and which have electrically operated equipment, must be supplied by approved collector rings that are totally enclosed or located so they are accessible to authorized personnel only. The collector rings must be factory produced with an equipment grounding segment having a voltage and current rating that equals or exceeds the rating of the current carrying segments. Collector rings must have an ampacity not less than one hundred twenty-five percent of the full-load current of the largest device served plus the full-load current of all other devices served. Collector rings for control and signal purposes must have an ampacity not less than one hundred twenty-five percent of the full-load current of the largest device served plus the full-load current of all other devices served.

(6) Equipment grounding. All noncurrent carrying metal parts of amusement rides and structures must be grounded by

an equipment grounding conductor routed with the feeder or circuit conductors in accordance with the National Electrical Code and these rules. The metallic structure must not be used as a current carrying conductor.

EXCEPTION: The metallic structure is permitted to be used as the return path for low voltage systems that do not exceed thirty volts, provided that the ungrounded conductors are protected by an overcurrent device in accordance with the National Electrical Code and the system is factory built for such use.

(7) Existing concessions or games electrical systems must comply with the National Electrical Code and must be maintained in full compliance with codes and standards in effect at the time they were manufactured. When new concessions or games are purchased, manufactured or constructed, or where existing concessions or games have major modification, the electrical system must comply with this chapter and the edition of the National Electrical Code in effect at the time. All concessions and games must be identified in or on the disconnecting means and in records furnished to the department with the edition of the National Electrical Code the electrical system is intended to comply with, or be certified and labeled by the department as a factory assembled structure.

[Statutory Authority: RCW 19.28.010, 19.28.031, 19.28.061, 19.28.101, 19.28.171, 19.28.191, 19.28.201, 19.28.251, 19.28.271, 19.28.311, 19.28.321, 67.42.020, 67.42.025, 67.42.050, and chapters 19.28 and 67.42 RCW. 02-21-103, § 296-403A-230, filed 10/22/02, effective 11/22/02.]

WAC 296-403A-240 Department on-site electrical inspection. (1) Department electrical inspection will be done each time an amusement ride or structure is set up. Fees will be paid in accordance with chapter 296-46A WAC, as amended. An on-site electrical inspection permit and fee is not required for any amusement ride or structure when all of the following conditions are met:

(a) The ride is equipped with a supply cord that does not exceed 120 volts or 20 amps.

(b) The amusement ride inspector, on the operating permit application, has documented the size and length of the supply cord.

(c) No extension cords are used to supply the equipment.

(d) The amusement ride or structure has a current amusement ride operating permit decal.

(2) Itinerary for set-up locations must be made available to the chief electrical inspector upon request.

(3) Amusement rides that are leased and set up for private use (not operated for revenue) must also comply with the following in addition to the on-site inspection and operating permit requirements established by this chapter:

(a) The lessor must provide the lessee with manufacturer's set up instructions.

(b) The lessor or their authorized agent is responsible for providing proper set up and tear down of each amusement ride or structure (authorized agents must be under written contract to the owner or operator).

(c) The lessor is responsible to maintain proper documentation assuring that each lessee has been provided with proper manufacturer's instructions for operating and setting up each individual leased amusement ride or structure.

[Statutory Authority: RCW 19.28.010, 19.28.031, 19.28.061, 19.28.101, 19.28.171, 19.28.191, 19.28.201, 19.28.251, 19.28.271, 19.28.311, 19.28.321, 67.42.020, 67.42.025, 67.42.050, and chapters 19.28 and 67.42 RCW. 02-21-103, § 296-403A-240, filed 10/22/02, effective 11/22/02.]

Chapter 296-800 WAC
SAFETY AND HEALTH CORE RULES

WAC

296-800-100 Introduction.

EMPLOYER RESPONSIBILITIES: SAFE WORKPLACE

296-800-110 Employer responsibilities: Safe workplace—Summary.
296-800-11005 Provide a workplace free from recognized hazards.
296-800-11010 Provide and use means to make your workplace safe.
296-800-11015 Prohibit employees from entering, or being in, any workplace that is not safe.
296-800-11020 Construct your workplace so it is safe.
296-800-11025 Prohibit alcohol and narcotics from your workplace.
296-800-11030 Prohibit employees from using tools and equipment that are not safe.
296-800-11035 Establish, supervise, and enforce rules that lead to a safe and healthy work environment that are effective in practice.
296-800-11040 Control chemical agents.
296-800-11045 Protect employees from biological agents.

EMPLOYEE RESPONSIBILITIES

296-800-120 Rule.
296-800-12005 Employee responsibilities.

SAFETY COMMITTEES AND SAFETY MEETINGS

296-800-130 Safety committees/safety meetings—Summary.
296-800-13020 Establish and conduct safety committees.
296-800-13025 Follow these rules to conduct safety meetings.

ACCIDENT PREVENTION PROGRAM

296-800-140 Accident prevention program.
296-800-14005 Develop a formal, written accident prevention program.
296-800-14020 Develop, supervise, implement, and enforce safety and health training programs that are effective in practice.
296-800-14025 Make sure your accident prevention program is effective in practice.

FIRST-AID SUMMARY

296-800-150 Rule summary.
296-800-15005 Make sure that first-aid trained personnel are available to provide quick and effective first aid.
296-800-15020 Make sure appropriate first-aid supplies are readily available.
296-800-15030 Make sure emergency washing facilities are functional and readily accessible.
296-800-15035 Inspect and activate your emergency washing facilities.
296-800-15040 Make sure supplemental flushing equipment provides sufficient water.

PERSONAL PROTECTIVE EQUIPMENT (PPE)

296-800-160 Summary.
296-800-16005 Do a hazard assessment for PPE.
296-800-16010 Document your hazard assessment for PPE.
296-800-16015 Select appropriate PPE for your employees.
296-800-16020 Provide PPE to your employees.
296-800-16025 Train your employees to use PPE.
296-800-16030 Retrain employees to use PPE, if necessary.
296-800-16035 Document PPE training.
296-800-16040 Require your employees to use necessary PPE on the job.
296-800-16045 Keep PPE in safe and good condition.
296-800-16050 Make sure your employees use appropriate eye and face protection.
296-800-16055 Make sure your employees use appropriate head protection.
296-800-16060 Make sure your employees use appropriate foot protection.
296-800-16065 Make sure your employees use appropriate hand protection.
296-800-16070 Make sure your employees are protected from drowning.

EMPLOYER—CHEMICAL HAZARD COMMUNICATION INTRODUCTION

296-800-170 Employer chemical hazard communication—Introduction.
296-800-17005 Develop, implement, maintain, and make available a written Chemical Hazard Communication Program.
296-800-17007 Include multiemployer workplaces in your program if necessary.
296-800-17010 Identify and list all the hazardous chemicals present in your workplace.
296-800-17015 Obtain and maintain material safety data sheets (MSDSs) for each hazardous chemical used.
296-800-17020 Make sure material safety data sheets (MSDSs) are readily accessible to your employees and NIOSH.
296-800-17025 Label containers holding hazardous chemicals.
296-800-17030 Inform and train your employees about hazardous chemicals in your workplace.
296-800-17035 Follow these rules for laboratories using hazardous chemicals.
296-800-17040 Follow these rules for handling chemicals in factory-sealed containers.
296-800-17045 Translate certain chemical hazard communication documents upon request.
296-800-17050 Attempt to obtain a material safety data sheet (MSDS) upon request.
296-800-17055 Items or chemicals exempt from the rule, and exemptions from labeling.
296-800-180 Material safety data sheets (MSDSs) as exposure records.
296-800-18005 Preserve exposure records for at least 30 years.
296-800-18010 Inform current employees of exposure records.
296-800-18015 Provide access to exposure records.
296-800-18020 Transfer records when ceasing to do business.

SAFETY BULLETIN BOARD

296-800-190 Summary/rule.
296-800-19005 Provide a safety bulletin board in your workplace.

WISHA POSTER

296-800-200 WISHA poster.
296-800-20005 Post and keep a WISHA poster in your workplace.

LIGHTING

296-800-210 Lighting.
296-800-21005 Provide and maintain adequate lighting.

HOUSEKEEPING, DRAINAGE, AND STORAGE

296-800-220 Housekeeping, drainage, and storage—Summary.

HOUSEKEEPING

296-800-22005 Keep your workplace clean.
296-800-22010 Sweep and clean your workplace to minimize dust.
296-800-22015 Keep your workplace free of obstacles that interfere with cleaning.
296-800-22020 Control pests in your workplace.
296-800-22022 Make sure floors are maintained in a safe condition.

DRAINAGE

296-800-22025 Keep your workroom floors dry, when practical.
296-800-22030 Provide proper drainage.

STORAGE AREAS

296-800-22035 Store things safely.
296-800-22040 Control vegetation in your storage areas.

SANITATION AND HYGIENE FACILITIES AND PROCEDURES

296-800-230 Summary.

DRINKING WATER

296-800-23005 Provide safe drinking (potable) water in your workplace.
296-800-23010 Clearly mark the water outlets that are not fit for drinking (nonpotable).
296-800-23015 Make sure that systems delivering not-fit-for-drinking (nonpotable) water prevent backflow into drinking water systems.

BATHROOMS AND WASHING FACILITIES

296-800-23020 Provide bathrooms for your employees.
296-800-23025 Provide convenient and clean washing facilities.

EATING AREAS AND FOOD SERVICE

296-800-23040 Make sure eating areas are safe and healthy.
296-800-23045 Follow these requirements if you provide food service to your employees.

GARBAGE AND WASTE DISPOSAL

296-800-23050 Dispose of garbage and waste safely.
296-800-23055 Remove garbage and waste in a way that does not create a health hazard.

LUNCHROOMS AND PERSONAL SERVICE ROOMS

296-800-23060 Provide a separate lunchroom if employees are exposed to toxic substances if they are allowed to eat and drink on the job site.
296-800-23065 Provide showers when required for employees working with chemicals.
296-800-23070 Provide change rooms when required.
296-800-23075 Make sure any work clothes you provide are dry.

ENVIRONMENTAL TOBACCO SMOKE IN THE OFFICE

296-800-240 Summary.
296-800-24005 Control tobacco smoke in your building.
296-800-24010 Control tobacco smoke that comes in from the outside.

STAIRS AND STAIR RAILINGS SUMMARY

296-800-250 Summary.
296-800-25005 Provide fixed stairs where required.
296-800-25010 Provide stairs that minimize hazards.
296-800-25015 Provide handrails and stair railings.

FLOOR OPENINGS, FLOOR HOLES AND OPEN-SIDED FLOORS

296-800-260 Summary.
296-800-26005 Guard or cover floor openings and floor holes.
296-800-26010 Protect open-sided floors and platforms.

WORKPLACE STRUCTURAL INTEGRITY

296-800-270 Summary.
296-800-27005 Do not overload floors or roofs.
296-800-27010 Make sure that floors are safe.
296-800-27015 Make sure floors can support equipment that moves or has motion.
296-800-27020 Post approved load limits (weight limits) for floors.

BASIC ELECTRICAL RULES

296-800-280 Basic electrical rules.
296-800-28005 Inspect all electrical equipment your employees use to make sure the equipment is safe.
296-800-28010 Make sure all electrical equipment is used for its approved or listed purpose.
296-800-28015 Make sure electrical equipment used or located in wet or damp locations is designed for such use.
296-800-28020 Make sure electrical equipment that is not marked is not used.
296-800-28022 Identify disconnecting means.
296-800-28025 Maintain electrical fittings, boxes, cabinets and outlets in good condition.
296-800-28030 Maintain all flexible cords and cables in good condition and use safely.
296-800-28035 Guard electrical equipment to prevent your employees from electrical hazards.
296-800-28040 Make sure electrical equipment is effectively grounded.
296-800-28045 Make sure electrical equipment has overcurrent protection.

PORTABLE LADDERS: METAL AND WOODEN

296-800-290 Summary.

PORTABLE METAL LADDERS

296-800-29005 Inspect your portable metal ladders periodically.
296-800-29010 Make sure your portable metal ladders are kept in good condition.
296-800-29015 Use your portable metal ladders safely.

PORTABLE WOODEN LADDERS

296-800-29020 Inspect your portable wooden ladders frequently.
296-800-29025 Make sure your portable wooden ladders are kept in a good condition.
296-800-29030 Use your portable wooden ladders safely and for their intended purpose.

296-800-29035 Safely use a portable wooden ladder when working more than 25 feet above ground.
296-800-29040 Use wooden stepladders safely.

PORTABLE FIRE EXTINGUISHERS

296-800-300 Summary—Portable fire extinguishers.
296-800-30005 Provide portable fire extinguishers in your workplace.
296-800-30010 Select and distribute portable fire extinguishers in your workplace.
296-800-30015 Make sure that portable fire extinguishers are kept fully charged, in operable condition, and left in their designated places.
296-800-30020 Inspect and test all portable fire extinguishers.
296-800-30025 Train your employees to use portable fire extinguishers.

EXIT ROUTES AND EMPLOYEE ALARM SYSTEMS

296-800-310 Summary.

EXIT ROUTES

296-800-31005 Provide an adequate number of exit routes.
296-800-31010 Make sure that exit routes are large enough.
296-800-31015 Make sure that exit routes meet their specific design and construction requirements.
296-800-31020 Make sure that each exit route leads outside.
296-800-31025 Provide unobstructed access to exit routes.
296-800-31030 Exit doors must be readily opened from the inside.
296-800-31035 Use side-hinged doors to connect rooms to exit routes.
296-800-31040 Provide outdoor exit routes that meet these requirements.
296-800-31045 Minimize danger to employees while they are using emergency exit routes.
296-800-31050 Mark exits adequately.
296-800-31053 Provide adequate lighting for exit routes and signs.
296-800-31055 Maintain the fire retardant properties of paints or other coatings.
296-800-31060 Maintain emergency safeguards.
296-800-31065 Maintain exit routes during construction and repair.
296-800-31067 Provide doors in freezer or refrigerated rooms that open from the inside.
296-800-31070 Install and maintain an appropriate employee alarm system.
296-800-31075 Establish procedures for sounding emergency alarms.
296-800-31080 Test the employee alarm system.

ACCIDENT REPORTING AND INVESTIGATING

296-800-320 Summary.
296-800-32005 Report the death, probable death of any employee, or the in-patient hospitalization of 2 or more employees within 8 hours.
296-800-32010 Make sure that any equipment involved in an accident is not moved.
296-800-32015 Assign people to assist the department of labor and industries.
296-800-32020 Conduct a preliminary investigation for all serious injuries.
296-800-32025 Document the preliminary investigation findings.

RELEASING ACCIDENT INVESTIGATION REPORTS

296-800-330 Releasing accident investigation reports.

PROTECTING THE IDENTITY OF THE SOURCE OF CONFIDENTIAL INFORMATION

296-800-340 Protecting the identity of the source of confidential information.

WISHA APPEALS, PENALTIES AND OTHER PROCEDURAL RULES

296-800-350 Introduction.

WISHA INSPECTIONS AND CITATIONS

296-800-35002 Types of workplace inspections.
296-800-35004 Scheduling inspections.
296-800-35006 Inspection techniques.
296-800-35008 Response to complaints submitted by employees or their representatives.
296-800-35010 Citations mailed after an inspection.
296-800-35012 Employees (or their representatives) can request a citation and notice.
296-800-35016 Posting a citation and notice and employee complaint information.

CIVIL PENALTIES FOR VIOLATING WISHA REQUIREMENTS

296-800-35018 Reasons to assess civil penalties.
296-800-35020 Minimum penalties.

HOW CIVIL PENALTIES ARE CALCULATED

296-800-35022 Base penalty calculations—Severity and probability.
296-800-35024 Severity rate determination.
296-800-35026 Probability rate determination.
296-800-35028 Determining the gravity of a violation.
296-800-35030 Base penalty adjustments.
296-800-35032 Types of base penalty adjustments.
296-800-35038 Minimum and maximum adjusted base penalty amounts.
296-800-35040 Reasons for increasing civil penalty amounts.

CERTIFY THAT VIOLATIONS HAVE BEEN ABATED

296-800-35042 Employers must certify that violations have been abated.
296-800-35044 For willful, repeated, or serious violations, submit additional documentation.
296-800-35046 Submitting correction action plans.
296-800-35048 Submit progress reports to the department when required.
296-800-35049 WISHA determines the date by which abatement documents must be submitted.
296-800-35050 Inform affected employees and their representatives of abatement actions you have taken.
296-800-35052 Tag cited moveable equipment to warn employees of a hazard.

REQUESTING MORE TIME TO COMPLY

296-800-35056 You can request more time to comply.
296-800-35062 WISHA's response to your request for more time.
296-800-35063 Post the department's response.
296-800-35064 A hearing can be requested about the department's response.
296-800-35065 Post the department's hearing notice.
296-800-35066 Hearing procedures.
296-800-35072 Post the hearing decision.

REQUESTING AN APPEAL OF WISHA CITATIONS AND CORRECTIVE NOTICES

296-800-35076 Employers and employees can request an appeal of a citation and notice.
296-800-35078 Await the department's response to your appeal request.
296-800-35080 Department actions when reassuming jurisdiction over an appeal.
296-800-35082 Appealing a corrective notice.
296-800-35084 Notify employees.

USING STANDARDS FROM NATIONAL ORGANIZATIONS AND FEDERAL AGENCIES

296-800-360 Rule.
296-800-36005 Comply with standards national organizations or of federal agencies when referenced in WISHA rules.
296-800-370 Definitions.

DISPOSITION OF SECTIONS FORMERLY CODIFIED IN THIS CHAPTER

296-800-13005 Establish a safety committee or have safety meetings. [Statutory Authority: RCW 49.17.010, [49.17].040, and [49.17].050. 01-23-060, § 296-800-13005, filed 11/20/01, effective 12/1/01; 01-11-038, § 296-800-13005, filed 5/9/01, effective 9/1/01.] Repealed by 02-16-047, filed 8/1/02, effective 10/1/02. Statutory Authority: RCW 49.17.010, [49.17].040, and [49.17].-050.

296-800-13010 Make sure that each meeting includes a discussion of established safety topics. [Statutory Authority: RCW 49.17.010, [49.17].040, and [49.17].050. 01-23-060, § 296-800-13010, filed 11/20/01, effective 12/1/01; 01-11-038, § 296-800-13010, filed 5/9/01, effective 9/1/01.] Repealed by 02-16-047, filed 8/1/02, effective 10/1/02. Statutory Authority: RCW 49.17.010, [49.17].040, and [49.17].050.

296-800-13015 Make sure that safety committee meeting minutes are recorded and preserved. [Statutory Authority: RCW 49.17.010, [49.17].040, and [49.17].050. 01-11-038, § 296-800-13015, filed 5/9/01, effective 9/1/01.] Repealed by 02-16-047, filed 8/1/02, effective 10/1/02. Statutory Authority: RCW 49.17.010, [49.17].040, and [49.17].050.

296-800-15010 Make sure first-aid training contains required subjects. [Statutory Authority: RCW 49.17.010, [49.17].040, and [49.17].050. 01-23-060, § 296-800-15010, filed 11/20/01, effective 12/1/01; 01-11-038, § 296-800-15010, filed 5/9/01, effective 9/1/01.] Repealed by 04-07-160, filed 3/23/04, effective 5/1/04. Statutory Authority: RCW 49.17.010, 49.17.040, 49.17.050, and 49.17.060.

296-800-15015 Document your first-aid training. [Statutory Authority: RCW 49.17.010, [49.17].040, and [49.17].050. 01-11-038, § 296-800-15015, filed 5/9/01, effective 9/1/01.] Repealed by 04-07-160, filed 3/23/04, effective 5/1/04. Statutory Authority: RCW 49.17.010, 49.17.040, 49.17.050, and 49.17.060.

296-800-15025 Provide a first-aid station when required. [Statutory Authority: RCW 49.17.010, [49.17].040, and [49.17].050. 01-11-038, § 296-800-15025, filed 5/9/01, effective 9/1/01.] Repealed by 04-07-160, filed 3/23/04, effective 5/1/04. Statutory Authority: RCW 49.17.010, 49.17.040, 49.17.050, and 49.17.060.

296-800-23030 Keep containers used for garbage or waste in a sanitary condition. [Statutory Authority: RCW 49.17.010, [49.17].040, and [49.17].050. 01-11-038, § 296-800-23030, filed 5/9/01, effective 9/1/01.] Repealed by 03-18-090, filed 9/2/03, effective 11/1/03. Statutory Authority: RCW 49.17.010, 49.17.040, 49.17.050, and 49.17.060. Later promulgation, see WAC 296-800-23050.

296-800-23035 Remove garbage and waste in a way that does not create a health hazard. [Statutory Authority: RCW 49.17.010, [49.17].040, and [49.17].050. 01-11-038, § 296-800-23035, filed 5/9/01, effective 9/1/01.] Repealed by 03-18-090, filed 9/2/03, effective 11/1/03. Statutory Authority: RCW 49.17.010, 49.17.040, 49.17.050, and 49.17.060. Later promulgation, see WAC 296-800-23055.

WAC 296-800-100 Introduction. The WISHA Core Rules: Your foundation for a safe and healthful workplace. This book contains 26 basic safety and health rules that affect all employers and should cover almost everything small, nonmanufacturing employers need for a safe and healthful workplace. These core rules include requirements for your Accident Prevention Program, personal protective equipment, first aid, and hazard communication program.

Note: You may need to comply with other WISHA rules. For a complete list of WISHA rules, see the resources section of this book.

Why does workplace safety and health matter to you?

On average, two people lose their lives every week in job-related incidents in Washington state. Each year, more than 250,000 workers' compensation claims are accepted for work-related injuries and illnesses. Medical care and wage replacement for these injured workers costs more than a billion dollars. The indirect costs of workplace injuries are even larger in terms of lost quality of life, personal financial ruin, operating costs of business, and decreased profitability. Employers and employees who work together to identify and control hazards on the job can save lives and money while improving business and productivity.

What are L&I and WISHA?

The department of labor and industries (L&I) is a state agency that provides many different services:

• Workplace safety and health, including inspections and enforcement, consultation, technical assistance, training, education and grants. (WISHA)

• Workers' compensation (or industrial insurance), including claims management, rate setting, medical payments, and research.

• Specialty compliance services, including contractor registration, electrical inspections, boiler and elevator inspections, apprenticeship programs and employment standards.

Many of these services are available from L&I's twenty-two regional offices (see the resource section of this book for a list of regional offices).

In 1973, the legislature passed the Washington Industrial Safety and Health Act or WISHA (Revised Code of Washington (chapter 49.17 RCW)). WISHA requires employers to provide safe and healthful workplaces for all employees. It gives L&I the responsibility to establish and enforce workplace safety and health rules. These rules are the Washington Administrative Code (WAC).

How does WISHA work?

WISHA covers nearly all employers and employees in Washington, including employees who work for the state, counties, and cities. L&I inspectors enforce WISHA rules by inspecting workplaces without advance notice including investigations of work-related deaths, injuries, and employees' complaints. When WISHA inspectors find a violation in a workplace, they issue a citation to the employer and a penalty may be attached. If you have questions about whether you are covered by WISHA, call 1-800-4BE SAFE (1-800-423-7233) or a local office of L&I.

What is OSHA and its relationship to WISHA?

The U.S. Congress created the Occupational Safety and Health Administration (OSHA) in 1971 to develop and enforce workplace safety and health rules throughout the country. States may choose to run their own safety and health programs as long as they are at least as effective as OSHA. Washington state has chosen to run its own program and most employers in the state, therefore, are subject to enforcement by L&I and not by federal OSHA.

In Washington state, OSHA covers workplaces with federal employees, nonfederal employees working on federal reservations and military bases, employees working on floating worksites (floating dry docks, fishing boats, construction barges), and employees working for tribal employers on tribal lands.

Does WISHA apply to you?

WISHA applies to almost every employer and employee in Washington. WISHA applies to you if:

• You hire someone to work for you as an employee, including workers from a temporary agency.

• You are hired to work for someone as their employee.

• You own your own business or you are a corporate officer and have elected industrial insurance coverage for yourself.

• You have a contract with someone else that primarily involves personal labor, even though you are not required to pay industrial insurance or unemployment insurance premiums.

• You volunteer your personal labor, or you have volunteers working for you who receive any benefit or compensation.

If you have any questions about your particular situation, call **1-800-4BE SAFE (1-800-423-7233)** or contact your local office of L&I for help. See the resource section of this book for a complete list of L&I offices.

Are there other safety and health rules I need to know about?

In addition to the rules in the WISHA *Safety and Health Core Rules* book, there are other general WISHA rules that may apply to employers, depending upon the industry and workplace activities. See the resource section of this book for a complete list of WISHA rules or go to the website for all the state rules administered by L&I at http://www.wa.gov/lni/home/wacs.htm. If you have questions about these rules or would like copies of them, call 1-800-4BE SAFE (1-800-423-7233) or your local office of L&I.

How do the WISHA rules relate to fire, building and electrical codes?

Fire codes: WISHA rules contain basic requirements for portable fire extinguishers, exit routes, housekeeping, storage, stairs and electrical hazards for the protection of employees in your workplace. The rules contained in this book are the most basic requirements to make sure that as an employer you provide a safe and healthy work environment. However, these are not the only rules regarding the requirements for portable fire extinguishers, exit routes, housekeeping, storage, stairs and electrical equipment. The fire marshal and local fire authorities enforce the Uniform Fire Code (UFC). WISHA and UFC differ in some areas, for example UFC requires exit sign lettering to be 6" or more and WISHA only states that the letters have to be clearly visible. Fire codes have more detailed and extensive requirements for the protection of the public than WISHA. Some codes overlap with WISHA requirements.

Building and electrical codes: WISHA rules are minimum requirements regardless of when the building was built or remodeled. Buildings must also comply with building and electrical codes at the time of construction. If you remodel, you must comply with the building and electrical codes applicable at that time. Building authorities and electrical inspection authorities enforce rules from the Uniform Building Code (UBC), and the National Electrical Code (NEC).

You are encouraged to call your local fire, building or electrical authority. For more information on the requirements in your area look in the government section of your phone book. Copies of these codes are available at your local library.

How can WISHA help employers and employees?

Employers can ask WISHA safety and health consultation staff for free, confidential consulting services in your workplace. WISHA safety and health professionals can examine your workplace and make recommendations about how to comply with WISHA rules. If the consultant finds hazards, the employer will be given a reasonable period of time to correct the hazard without citation or penalty.

Sometimes you might have to wait for an appointment because of the demand for these services. You still must provide a safe workplace while you wait for a consultation.

WISHA offers a wide variety of free services:

• Safety and health workshops held in locations throughout the state

• A comprehensive safety and health video lending library

• Safety and health publications geared for both employer and employee

• Website with on-line publications and learning opportunities

Note: By law, WISHA consultants do not have any enforcement authority.

Link: For more information, call 1-800-4BE SAFE (1-800-423-7233) or visit http://www.wa.gov/lni/home/training.htm.

[Statutory Authority: RCW 49.17.010, [49.17].040, and [49.17].050. 01-23-060, § 296-800-100, filed 11/20/01, effective 12/1/01; 01-11-038, § 296-800-100, filed 5/9/01, effective 9/1/01.]

EMPLOYER RESPONSIBILITIES: SAFE WORKPLACE

WAC 296-800-110 Employer responsibilities: Safe workplace—Summary.

Your responsibility:

To provide a safe and healthy workplace free from recognized hazards.

IMPORTANT:

Use these rules where there are no specific rules applicable to the particular hazard.

You must:

Provide a workplace free from recognized hazards.

WAC 296-800-11005.

Provide and use means to make your workplace safe.

WAC 296-800-11010.

Prohibit employees from entering, or being in, any workplace that is not safe.

WAC 296-800-11015.

Construct your workplace so it is safe.

WAC 296-800-11020.

Prohibit alcohol and narcotics from your workplace.

WAC 296-800-11025.

Prohibit employees from using tools and equipment that are not safe.

WAC 296-800-11030.

Establish, supervise, and enforce rules that lead to a safe and healthy work environment that are effective in practice.

WAC 296-800-11035.

Control chemical agents.

WAC 296-800-11040.

Protect employees from biological agents.

WAC 296-800-11045.

Note: Employees may discuss and participate in any WISHA safety and health related practice and may refuse to perform dangerous tasks without fear of discrimination. Discrimination includes: Dismissal, demotion, loss of seniority, denial of a promotion, harassment, etc. See chapter 296-360 WAC, Discrimination pursuant to RCW 49.17.160, for a complete description of discrimination and the department's responsibility to protect employees.

[Statutory Authority: RCW 49.17.010, 49.17.040, 49.17.050, and 49.17.060. 03-18-090, § 296-800-110, filed 9/2/03, effective 11/1/03. Statutory Authority: RCW 49.17.010, [49.17].040, and [49.17].050. 02-16-047, § 296-800-110, filed 8/1/02, effective 10/1/02; 01-23-060, § 296-800-110, filed 11/20/01, effective 12/1/01; 01-11-038, § 296-800-110, filed 5/9/01, effective 9/1/01.]

WAC 296-800-11005 Provide a workplace free from recognized hazards. You must:

• Provide your employees a workplace free from recognized hazards that are causing, or are likely to cause, serious injury or death.

Note: A hazard is recognized if it is commonly known in the employer's industry, or if there is evidence that the employer knew or should have known of the existence of the hazard, or if it can be established that any reasonable person would have recognized the hazard.

[Statutory Authority: RCW 49.17.010, [49.17].040, and [49.17].050. 01-23-060, § 296-800-11005, filed 11/20/01, effective 12/1/01; 01-11-038, § 296-800-11005, filed 5/9/01, effective 9/1/01.]

WAC 296-800-11010 Provide and use means to make your workplace safe. You must:

• Provide and use safety devices, safeguards, and use work practices, methods, processes, and means that are reasonably adequate to make your workplace safe.

– Do not remove, displace, damage, destroy or carry off any safety device, safeguard, notice or warning, furnished for use in any employment or place of employment.

– Do not interfere with use of any of the above.

– Do not interfere with the use of any method or process adopted for the protection of any employee.

– Do everything reasonably necessary to protect the life and safety of your employees.

[Statutory Authority: RCW 49.17.010, [49.17].040, and [49.17].050. 01-11-038, § 296-800-11010, filed 5/9/01, effective 9/1/01.]

WAC 296-800-11015 Prohibit employees from entering, or being in, any workplace that is not safe. You must:

• Prohibit employees from entering, or being in, any workplace that is not safe.

[Statutory Authority: RCW 49.17.010, [49.17].040, and [49.17].050. 01-11-038, § 296-800-11015, filed 5/9/01, effective 9/1/01.]

WAC 296-800-11020 Construct your workplace so it is safe. You must:

• Not construct, or cause to be constructed, a workplace that is not safe.

– This rule applies to employers, owners, and renters of property used as a place of employment.

[Statutory Authority: RCW 49.17.010, [49.17].040, and [49.17].050. 01-23-060, § 296-800-11020, filed 11/20/01, effective 12/1/01; 01-11-038, § 296-800-11020, filed 5/9/01, effective 9/1/01.]

WAC 296-800-11025 Prohibit alcohol and narcotics from your workplace. You must:

• Prohibit alcohol and narcotics from your workplace, except in industries and businesses that produce, distribute, or sell alcohol and narcotic drugs.

• Prohibit employees under the influence of alcohol or narcotics from the worksite.

EXEMPTION: Employees who are taking prescription drugs, as directed by a physician or dentist, are exempt from this section, if the employees are not a danger to themselves or other employees.

[Statutory Authority: RCW 49.17.010, [49.17].040, and [49.17].050. 01-11-038, § 296-800-11025, filed 5/9/01, effective 9/1/01.]

WAC 296-800-11030 Prohibit employees from using tools and equipment that are not safe.

You must:

• Take responsibility for the safe condition of tools and equipment used by employees.

Note: This applies to all equipment, materials, tools, and machinery whether owned by the employer or another firm or individual.

[Statutory Authority: RCW 49.17.010, 49.17.040, 49.17.050, and 49.17.060. 03-18-090, § 296-800-11030, filed 9/2/03, effective 11/1/03. Statutory Authority: RCW 49.17.010, [49.17].040, and [49.17].050. 01-11-038, § 296-800-11030, filed 5/9/01, effective 9/1/01.]

WAC 296-800-11035 Establish, supervise, and enforce rules that lead to a safe and healthy work environment that are effective in practice. You must:

• Establish, supervise, and enforce rules that lead to a safe and healthy work environment that are effective in practice.

[Statutory Authority: RCW 49.17.010, [49.17].040, and [49.17].050. 01-11-038, § 296-800-11035, filed 5/9/01, effective 9/1/01.]

WAC 296-800-11040 Control chemical agents. You must:

• Control chemical agents in a manner that they will not present a hazard to your workers; or

• Protect workers from the hazard of contact with, or exposure to, chemical agents.

Note: Pesticides are considered to be chemical agents. As required by this rule, you must control them or provide protection to workers from exposure to pesticide hazards. Pesticide manufacturers supply precautionary statements in the information provided with the pesticide that tells you how to protect your workers from these hazards.

[Statutory Authority: RCW 49.17.010, [49.17].040, and [49.17].050. 02-16-047, § 296-800-11040, filed 8/1/02, effective 10/1/02.]

WAC 296-800-11045 Protect employees from biological agents.

You must:

(1) Protect employees from exposure to hazardous concentrations of biological agents that may result from processing, handling or using materials or waste.

Note: Potential exposure to biological agents occurs during cleanup, or other tasks, where employees handle:
– Animals or animal waste
– Body fluids
– Biological agents in a medical research lab
– Mold or mildew
Check The Center of Disease Control website (www.cdc.gov) to find published guidelines and information on safe handling and protection from specific biological agents (examples: Hanta virus, TB).

You must:

(2) Warn employees of biohazards.

• Use signs, tags, or labels to identify:

– The actual or potential presence of a biohazard;

AND

– Equipment, containers, rooms, materials, experimental animals, or any combinations of these that contain viable hazardous agents.

Definition:

Biohazard means those infectious agents presenting a risk or potential risk of death, injury or illness to employees.

You must:

• Make sure the sign, tag, or label includes the biohazard symbol that is designed and proportioned in the illustration that follows.

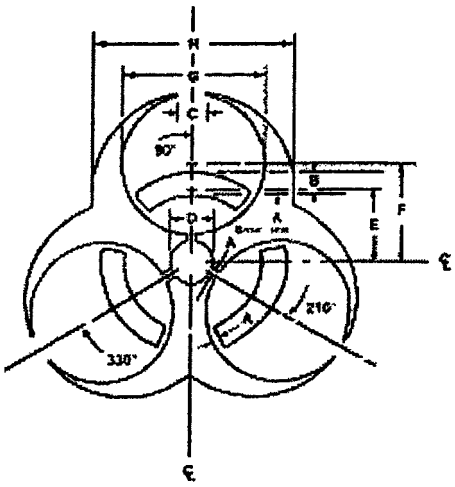

Dimension	A	B	C	D	E	F	G	H
Limits	1	3½	4	5	11	16	21	30

You must:

• Make sure that there is sufficient contrast for the symbol to be clearly defined, if the sign, tag, or label has a background color.

Reference: Additional requirements for biohazard signs, tags, and labels may apply. See WAC 296-823-14025 and 296-823-18040 of the *Bloodborne Pathogens* book.

Note:
- It's recommended that the sign, tag, or label have a key color of fluorescent orange or orange-red and lettering or symbols in a contrasting color.
- Appropriate wording may be used in association with the symbol to indicate:
  – The nature or identity of the hazard;
  – Name of individual responsible for its control;
  – Precautionary information;

  OR
  – Other information.
- This information should not be written on the symbol.

[Statutory Authority: RCW 49.17.010, 49.17.040, 49.17.050, 49.17.060. 04-18-080, § 296-800-11045, filed 8/31/04, effective 11/1/04. Statutory Authority: RCW 49.17.010, [49.17].040, and [49.17].050. 02-16-047, § 296-800-11045, filed 8/1/02, effective 10/1/02.]

EMPLOYEE RESPONSIBILITIES

WAC 296-800-120 Rule. Employee's responsibility: To play an active role in creating a safe and healthy workplace and comply with all applicable safety and health rules.

Note: Employees may discuss and participate in any WISHA safety and health related practice and may refuse to perform dangerous tasks without fear of discrimination. Discrimination includes: Dismissal, demotion, loss of seniority, denial of a promotion, harassment, etc. (see chapter 296-360 WAC, Discrimination) pursuant to RCW 49.17.160 for a complete description of discrimination and the department's responsibility to protect employees.

[Statutory Authority: RCW 49.17.010, [49.17].040, and [49.17].050. 01-23-060, § 296-800-120, filed 11/20/01, effective 12/1/01; 01-11-038, § 296-800-120, filed 5/9/01, effective 9/1/01.]

WAC 296-800-12005 Employee responsibilities. Employees must:

• Study and follow all safe practices that apply to their work.

• Coordinate and cooperate with all other employees in the workplace to try to eliminate on-the-job injuries and illnesses.

• Apply the principles of accident prevention in their daily work and use proper safety devices and protective equipment as required by their employment or employer.

• Take care of all personal protective equipment (PPE) properly.

• Not wear torn or loose clothing while working around machinery.

Note: Things such as clothing, hair, and jewelry can get caught in machinery and be a hazard on the job.

Employees must:

• Report promptly to their supervisor every industrial injury or occupational illness.

• Not remove, displace, damage, or destroy or carry off any safeguard, notice, or warning provided to make the workplace safe.

• Not interfere with use of any safeguard by anyone in the workplace.

• Not interfere with the use of any work practice designed to protect them from injuries.

• Do everything reasonably necessary to protect the life and safety of employees.

[Statutory Authority: RCW 49.17.010, [49.17].040, and [49.17].050. 01-23-060, § 296-800-12005, filed 11/20/01, effective 12/1/01; 01-11-038, § 296-800-12005, filed 5/9/01, effective 9/1/01.]

SAFETY COMMITTEES AND SAFETY MEETINGS

WAC 296-800-130 Safety committees/safety meetings—Summary. Important:

This rule requires you to have a method of communicating and evaluating safety and health issues brought up by you or your employees in your workplace. Larger employers **must** establish a safety committee. Smaller employers have the choice of either establishing a safety committee or holding safety meetings with a management representative present.

There is a difference between a safety committee and a safety meeting.

• A safety committee is an organizational structure where members represent a group. This gives everyone a voice but keeps the meeting size to an effective number of participants.

• A safety meeting includes all employees and a management person is there to ensure that issues are addressed. Typically, the safety committee is an effective safety management tool for a larger employer and safety meetings are more effective for a smaller employer.

Your responsibility:

To establish a safety committee or hold safety meetings to create and maintain a safe and healthy workplace for all employees.

You must:

Establish and conduct safety committees.

WAC 296-800-13020.

Follow these rules to conduct safety meetings.

WAC 296-800-13025.

[Statutory Authority: RCW 49.17.010, [49.17].040, and [49.17].050. 02-16-047, § 296-800-130, filed 8/1/02, effective 10/1/02; 01-11-038, § 296-800-130, filed 5/9/01, effective 9/1/01.]

WAC 296-800-13020 Establish and conduct safety committees. You must:

If:	Then:
You employ 11 or more employees on the same shift at the same location	You must establish a safety committee

(1) Establish a safety committee.

• Make sure your committee:

– Has employee-elected and employer-selected members.

❖ The number of employee-elected members must equal or exceed the number of employer-selected members.

Note: Employees selected by the employees bargaining representative or union qualify as employee-elected.

❖ The term of employee-elected members must be a maximum of one year. (There is no limit to the number of terms a representative can serve.)

❖ If there is an employee-elected member vacancy, a new member must be elected prior to the next scheduled meeting.

– Has an elected chairperson.

– Determines how often, when, and where, the safety committee will meet.

Note:
- Meetings should be one hour or less, unless extended by a majority vote of the committee.
- If the committee cannot agree on the frequency of meetings, the department of labor and industries regional safety consultation representative should be consulted for recommendations. (See the resources section of this book for contacts.)

You must:

(2) Cover these topics:

• Review safety and health inspection reports to help correct safety hazards.

• Evaluate the accident investigations conducted since the last meeting to determine if the cause(s) of the unsafe situation was identified and corrected.

• Evaluate your workplace accident and illness prevention program and discuss recommendations for improvement, if needed.

• Document attendance.

• Write down subjects discussed.

(3) Record meetings.

• Prepare minutes from each safety committee and:

– Preserve them for one year.

– Make them available for review by safety and health consultation personnel of the department of labor and industries.

[Statutory Authority: RCW 49.17.010, [49.17].040, and [49.17].050. 02-16-047, § 296-800-13020, filed 8/1/02, effective 10/1/02.]

WAC 296-800-13025 Follow these rules to conduct safety meetings. You must:

If:	Then:
You have 10 or fewer employees **OR** If you have 11 or more employees that • Work on different shifts with 10 or fewer employees on each shift **OR** • Work in widely separate locations with 10 or fewer employees at each location	You may choose to hold a safety meeting instead of a safety committee

(1) Do the following for safety meetings.

• Make sure your safety meetings:

– Are held monthly. You may meet more often to discuss safety issues as they come up.

– Have at least one management representative.

(2) Cover these topics.

• Review safety and health inspection reports to help correct safety hazards.

• Evaluate the accident investigations conducted since the last meeting to determine if the cause(s) of the unsafe situation was identified and corrected.

• Evaluate your workplace accident and illness prevention program and discuss recommendations for improvement, if needed.

• Document attendance.

• Write down subjects discussed.

Note: There are no formal documentation requirements for safety meetings except for writing down who attended and the topics discussed.

[Statutory Authority: RCW 49.17.010, [49.17].040, and [49.17].050. 02-16-047, § 296-800-13025, filed 8/1/02, effective 10/1/02.]

ACCIDENT PREVENTION PROGRAM

WAC 296-800-140 Accident prevention program. Summary.

Your responsibility: To establish, supervise and enforce an accident prevention program (APP) that is effective in practice. (You may call this your total safety and health plan.)

You must:

Develop a formal, written accident prevention program (APP).

WAC 296-800-14005.

Develop, supervise, implement, and enforce safety and health training programs that are effective in practice.

WAC 296-800-14020.

Make sure your accident prevention program (APP) is effective in practice.

WAC 296-800-14025.

[Statutory Authority: RCW 49.17.010, [49.17].040, and [49.17].050. 01-11-038, § 296-800-140, filed 5/9/01, effective 9/1/01.]

WAC 296-800-14005 Develop a formal, written accident prevention program. You must:

• Develop a formal accident prevention program that is outlined in writing. The program must be tailored to the

needs of your particular workplace or operation and to the types of hazards involved.

Note: The term "accident prevention program" refers to your written plan to prevent accidents, illnesses, and injuries on the job. Your accident prevention program may be known as your safety and health plan, injury prevention program, or by some other name.

You must:

• Make sure your Accident Prevention Program contains at least the following elements:

– A safety orientation:

❖ A description of your total safety and health program.

❖ On-the-job orientation showing employees what they need to know to perform their initial job assignments safely.

❖ How and when to report on-the-job injuries including instruction about the location of first-aid facilities in your workplace.

❖ How to report unsafe conditions and practices.

❖ The use and care of required personal protective equipment (PPE).

❖ What to do in an emergency, including how to exit the workplace.

❖ Identification of hazardous gases, chemicals, or materials used on-the-job and instruction about the safe use and emergency action to take after accidental exposure.

– A safety and health committee.

(*WAC 296-800-130.*)

[Statutory Authority: RCW 49.17.010, [49.17].040, and [49.17].050. 01-11-038, § 296-800-14005, filed 5/9/01, effective 9/1/01.]

WAC 296-800-14020 Develop, supervise, implement, and enforce safety and health training programs that are effective in practice. You must:

• Develop, supervise, implement, and enforce training programs to improve the skill, awareness, and competency of all your employees in the field of occupational safety and health.

• Make sure training includes on-the-job instruction to employees prior to their job assignment about hazards such as:

– Safe use of powered materials-handling equipment, such as forklifts, backhoes, etc.

– Safe use of machine tool operations.

– Use of toxic materials.

– Operation of utility systems.

[Statutory Authority: RCW 49.17.010, [49.17].040, and [49.17].050. 01-11-038, § 296-800-14020, filed 5/9/01, effective 9/1/01.]

WAC 296-800-14025 Make sure your accident prevention program is effective in practice. You must:

• Establish, supervise, and enforce your accident prevention program in a manner that is effective in practice.

[Statutory Authority: RCW 49.17.010, [49.17].040, and [49.17].050. 01-11-038, § 296-800-14025, filed 5/9/01, effective 9/1/01.]

FIRST-AID SUMMARY

WAC 296-800-150 Rule summary. Your responsibility: Make sure first-aid trained personnel are available to provide quick and effective first aid.

You must:

Make sure that first-aid trained personnel are available to provide quick and effective first aid.

WAC 246-800-15005.

Make sure appropriate first-aid supplies are readily available.

WAC 296-800-15020.

Make sure emergency washing facilities are functional and readily accessible.

WAC 296-800-15030.

Inspect and activate your emergency washing facilities.

WAC 296-800-15035.

Make sure supplemental flushing equipment provides sufficient water.

WAC 296-800-15040.

Note:
- Employers who require their employees to provide first aid must comply with chapter 296-823 WAC, Occupational exposure to bloodborne pathogens.
- Your workplace may be covered by separate first-aid rules. If you do any of the types of work listed below, you must follow separate industry specific rules:

Industry	Chapter (WAC)
Agriculture	296-307
Compressed air	296-36
Construction	296-155
Fire fighting	296-305
Logging	296-54
Sawmill	296-78
Ship building and repairing	296-304

You can get copies of these rules by calling 1-800-4BE SAFE (1-800-423-7233), or by going to http://www.lni.wa.gov.

[Statutory Authority: RCW 49.17.010, 49.17.040, 49.17.050, and 49.17.060. 04-07-160, § 296-800-150, filed 3/23/04, effective 5/1/04. Statutory Authority: RCW 49.17.010, [49.17].040, and [49.17].050. 02-16-047, § 296-800-150, filed 8/1/02, effective 10/1/02; 01-11-038, § 296-800-150, filed 5/9/01, effective 9/1/01.]

WAC 296-800-15005 Make sure that first-aid trained personnel are available to provide quick and effective first aid.

You must:

Comply with the first-aid training requirements of 29 CFR 1910.151(b) which states:

"In the absence of an infirmary, clinic, or hospital in near proximity to the workplace, which is used for the treatment of all injured employees, a person or persons shall be adequately trained to render first aid."

[Statutory Authority: RCW 49.17.010, 49.17.040, 49.17.050, and 49.17.060. 04-07-160, § 296-800-15005, filed 3/23/04, effective 5/1/04; 03-09-110, § 296-800-15005, filed 4/22/03, effective 8/1/03. Statutory Authority: RCW 49.17.010, [49.17].040, and [49.17].050. 01-23-060, § 296-800-15005, filed 11/20/01, effective 12/1/01; 01-11-038, § 296-800-15005, filed 5/9/01, effective 9/1/01.]

WAC 296-800-15020 Make sure appropriate first-aid supplies are readily available. You must:

• Make sure first-aid supplies are readily available.

• Make sure first-aid supplies at your workplace are appropriate to:

– Your occupational setting.

– The response time of your emergency medical services.

Note: First-aid kits from your local retailer or safety supplier should be adequate for most nonindustrial employers.

You must:

• Make sure that first-aid supplies are:

– Easily accessible to all your employees.

– Stored in containers that protect them from damage, deterioration, or contamination. Containers must be clearly marked, not locked, and may be sealed.

– Able to be moved to the location of an injured or acutely ill worker.

[Statutory Authority: RCW 49.17.010, [49.17].040, and [49.17].050. 01-11-038, § 296-800-15020, filed 5/9/01, effective 9/1/01.]

WAC 296-800-15030 Make sure emergency washing facilities are functional and readily accessible. You must:

• Provide an emergency shower:

– When there is potential for major portions of an employee's body to contact corrosives, strong irritants, or toxic chemicals.

– That delivers water to cascade over the user's entire body at a minimum rate of 20 gallons (75 liters) per minute for fifteen minutes or more.

• Provide an emergency eyewash:

– When there is potential for an employee's eyes to be exposed to corrosives, strong irritants, or toxic chemicals.

– That irrigates and flushes both eyes simultaneously while the user holds their eyes open.

– With an on-off valve that activates in one second or less and remains on without user assistance until intentionally turned off.

– That delivers at least 0.4 gallons (1.5 liters) of water per minute for fifteen minutes or more.

Note: Chemicals that require emergency washing facilities:

- You can determine whether chemicals in your workplace require emergency washing facilities by looking at the material safety data sheet (MSDS) or similar documents. The MSDS contains information about first-aid requirements and emergency flushing of skin or eyes.
- For chemicals developed in the workplace, the following resources provide information about first-aid requirements:

– NIOSH Pocket Guide to Chemical Hazards
* DHHS (NIOSH) Publication No. 97-140
* http://www.cdc.gov/niosh/npg/ggdstart.html
– Threshold Limit Values for Chemical Substances and Physical Agents American Conference of Governmental Industrial Hygienists (ACGIH)

You must:

• Make sure emergency washing facilities:

– Are located so that it takes no more than ten seconds to reach.

– Are kept free of obstacles blocking their use.

– Function correctly.

– Provide the quality and quantity of water that is satisfactory for emergency washing purposes.

Note:
- If water in emergency washing facilities is allowed to freeze, they will not function correctly. Precautions need to be taken to prevent this from happening.
- The travel distance to an emergency washing facility should be no more than fifty feet (15.25 meters).
- For further information on the design, installation, and maintenance of emergency washing facilities, see American National Standards Institute (ANSI) publication Z358.1 - 1998, *Emergency Eyewash and Shower Equipment*. Emergency washing facilities that are designed to meet ANSI Z358.1 - 1998 also meet the requirements of this standard. The ANSI standard can be obtained from the American National Standards Institute, 1430 Broadway, New York, New York 10018.

Reference:
- Training in the location and use of your emergency washing facilities is required under the employer chemical hazard communication rule, WAC 296-800-170, and the accident prevention program rule, WAC 296-800-140.
- All emergency washing facilities using "not fit for drinking" (nonpotable) water must have signs stating the water is "not fit for drinking." See WAC 296-800-23010.

[Statutory Authority: RCW 49.17.010, [49.17].040, and [49.17].050. 02-16-047, § 296-800-15030, filed 8/1/02, effective 10/1/02.]

WAC 296-800-15035 Inspect and activate your emergency washing facilities. You must:

• Make sure all plumbed emergency washing facilities are inspected once a year to make sure they function correctly.

Note: Inspections should include:
- Examination of the piping
- Making sure that water is available at the appropriate temperature and quality
- Activation to check that the valves and other hardware work properly
- Checking the water flow rate.

You must:

• Make sure plumbed emergency eyewashes and hand-held drench hoses are activated weekly to check the proper functioning of the valves, hardware, and availability of water

• Make sure all self-contained eyewash equipment and personal eyewash units are inspected and maintained according to manufacturer instructions.

– Inspections to check proper operation must be done once a year

– Sealed personal eyewashes must be replaced after the manufacturer's expiration date.

Note: Most manufacturers recommend replacing fluid in open self-contained eyewashes every six months. The period for sealed containers is typically two years.

[Statutory Authority: RCW 49.17.010, [49.17].040, and [49.17].050. 02-16-047, § 296-800-15035, filed 8/1/02, effective 10/1/02.]

WAC 296-800-15040 Make sure supplemental flushing equipment provides sufficient water.

Note: Supplemental flushing equipment cannot be used in place of required emergency showers or eyewashes.

You must:

• Make sure hand-held drench hoses deliver at least 3.0 gallons (11.4 liters) of water per minute for fifteen minutes or more.

Note: Why use a drench hose? A drench hose is useful when:
- The spill is small and does not require an emergency shower
- Used with a shower for local rinsing, particularly on the lower extremities.

You must:

• Make sure personal eyewash equipment delivers only clean water or other medically approved eye flushing solutions.

[Statutory Authority: RCW 49.17.010, [49.17].040, and [49.17].050. 02-16-047, § 296-800-15040, filed 8/1/02, effective 10/1/02.]

PERSONAL PROTECTIVE EQUIPMENT (PPE)

WAC 296-800-160 Summary. Your responsibility: To make sure that your employees have, use, and care for the appropriate personal protective equipment (PPE).

PPE is an item or items used to protect the eyes, face, head, body, arms, hands, legs, and feet such as goggles, helmets, head covers, gloves, rubber slickers, disposable coveralls, safety shoes, protective shields, and barriers.

You must:

Do a hazard assessment for PPE.
WAC 296-800-16005.

Document your hazard assessment for PPE.
WAC 296-800-16010.

Select appropriate PPE for your employees.
WAC 296-800-16015.

Provide PPE to your employees.
WAC 296-800-16020.

Train your employees to use PPE.
WAC 296-800-16025.

Retrain employees to use PPE, if necessary.
WAC 296-800-16030.

Document PPE training.
WAC 296-800-16035.

Require your employees to use necessary PPE on the job.
WAC 296-800-16040.

Keep your PPE safe and in good condition.
WAC 296-800-16045.

Make sure your employees use appropriate face and eye protection.
WAC 296-800-16050.

Make sure your employees use appropriate head protection.
WAC 296-800-16055.

Make sure your employees use appropriate foot protection.
WAC 296-800-16060.

Make sure your employees use appropriate hand protection.
WAC 296-800-16065.

Make sure your employees are protected from drowning.
WAC 296-800-16070.

Exemption: • WAC 296-800-16015, 296-800-16025, 296-800-16030, and 296-800-16035 do not apply to electrical protective equipment or respiratory protection. See chapters 296-24 WAC, Part L and chapter 296-62 WAC, Part E, for rules about these types of protective equipment.

[Statutory Authority: RCW 49.17.010, [49.17].040, and [49.17].050. 01-23-060, § 296-800-160, filed 11/20/01, effective 12/1/01; 01-11-038, § 296-800-160, filed 5/9/01, effective 9/1/01.]

WAC 296-800-16005 Do a hazard assessment for PPE. You must:

• Look for and identify hazards or potential hazards in your workplace and determine if PPE is necessary on the job.

Note: PPE alone should not be relied on to provide protection for your employees. PPE should be used after all other reasonable means of reducing hazards have been carried out. Identifying hazards in your workplace should be built into your regular routine. You should take active steps to get rid of all identified hazards. For example, you can:
- Consider other ways to get hazardous jobs done.
- Reduce hazardous materials or processes.
- Apply engineering controls to reduce or eliminate hazards.

[Statutory Authority: RCW 49.17.010, [49.17].040, and [49.17].050. 01-11-038, § 296-800-16005, filed 5/9/01, effective 9/1/01.]

WAC 296-800-16010 Document your hazard assessment for PPE. You must:

• Verify that a hazard assessment for PPE has been done at your workplace and complete a written certification (paper or electronic format) that includes the:

– Name of the workplace

– Address of the workplace you inspected for hazards

– Name of person certifying that a workplace hazard assessment was done

– Date(s) the workplace hazard assessment was done

– Statement identifying the document as the certification of hazard assessment for PPE for the workplace

[Statutory Authority: RCW 49.17.010, [49.17].040, and [49.17].050. 01-11-038, § 296-800-16010, filed 5/9/01, effective 9/1/01.]

WAC 296-800-16015 Select appropriate PPE for your employees. You must:

(1) Select appropriate PPE.

• Select appropriate PPE for your employees if hazards are present, or likely to be present.

• Select PPE for each at-risk employee to use for protection from the hazards identified in your workplace hazard assessment.

(2) Select PPE that properly fits each at-risk employee.

Note: The hazards in your workplace have special rules that apply to them.
For information about PPE for specific workplaces, see these WISHA rule books:

Construction Work	Chapter 296-155 WAC
Electrical Workers	Chapter 296-45 WAC
Fire Fighters	Chapter 296-305 WAC
General Occupational Health Standards	Chapter 296-62 WAC
General Safety and Health Standards	Chapter 296-24 WAC
Logging Operations	Chapter 296-54 WAC
Pulp, Paper and Paper Board Mills and Converters	Chapter 296-79 WAC
Ship Repairing, Ship Building and Shipbreaking	Chapter 296-304 WAC
Ski Area Facilities and Operations	Chapter 296-59 WAC
Telecommunication	Chapter 296-32 WAC
Textile Industry	Chapter 296-301 WAC

Note: For help in selecting PPE for your employees, you have several options. You may:
- Visit the OSHA website http://www.osha-slc.gov/SLTC/personalprotectiveequipment/index.html.
- Call 1-800-4BE SAFE (1-800-423-7233) for guidelines for selecting PPE.
- Consult with safety and health professionals knowledgeable in this area. See resource section for links to professional organizations.
- Discuss PPE choices with your employees.

[Statutory Authority: RCW 49.17.010, [49.17].040, and [49.17].050. 01-23-060, § 296-800-16015, filed 11/20/01, effective 12/1/01; 01-11-038, § 296-800-16015, filed 5/9/01, effective 9/1/01.]

WAC 296-800-16020 Provide PPE to your employees. You must:

• Provide PPE wherever hazards exist from:

– Processes or the environment

– Chemical hazards

– Radiological hazards or

– Mechanical irritants that could cause injury or impairment to the function of any body part through absorption, inhalation, or physical contact.

• Provide necessary PPE to employees at no cost to the employee if the PPE:

– Will be used to protect against hazardous materials

– Is the type that would not reasonably or normally be worn away from the workplace, such as single use or disposable PPE.

Note: Examples of PPE that the employer **must** provide are:
- Boots or gloves that could become contaminated with hazardous materials in the workplace.
- Safety glasses, goggles, and nonprescription protective eye wear.
- Goggles that fit over prescription eye wear.
- Hard hats.
- Full body harnesses and lanyards.
- Single use or disposable PPE such as plastic type gloves used in the food service or medical industries.

Examples of PPE that the employer may **not** have to provide are:
- Coats to protect against inclement weather.
- Leather boots, with or without steel toes, that will not become contaminated on the job.
- Prescription protective eye wear (except as part of a full face piece or hooded respirator).

[Statutory Authority: RCW 49.17.010, [49.17].040, and [49.17].050. 01-23-060, § 296-800-16020, filed 11/20/01, effective 12/1/01; 01-11-038, § 296-800-16020, filed 5/9/01, effective 9/1/01.]

WAC 296-800-16025 Train your employees to use PPE. You must:

• Communicate your PPE selection decision to each at-risk employee.

• Provide training to each employee who is required to use PPE on the job. Each affected employee must be trained to know at least the following:

– When PPE is necessary

– What PPE is necessary

– How to put on, take off, adjust, and wear PPE

– Limitations of PPE

– Proper care, maintenance, useful life, and disposal of PPE.

• Make sure before an employee is allowed to perform work requiring the use of PPE that the employee can:

– Demonstrate an understanding of the training specified above; and

– Demonstrate the ability to use PPE properly.

[Statutory Authority: RCW 49.17.010, [49.17].040, and [49.17].050. 01-23-060, § 296-800-16025, filed 11/20/01, effective 12/1/01; 01-11-038, § 296-800-16025, filed 5/9/01, effective 9/1/01.]

WAC 296-800-16030 Retrain employees to use PPE, if necessary. You must:

• Retrain an employee when you have reason to believe the understanding, motivation, and skills required to use the PPE has not been retained. Circumstances where retraining is required include:

– Changes in the workplace that make previous training out of date.

– Changes in the types of PPE to be used make previous training out of date.

– Work habits or demonstrated knowledge indicate that the employee has not retained the necessary understanding, skill, or motivation to use PPE.

[Statutory Authority: RCW 49.17.010, [49.17].040, and [49.17].050. 01-11-038, § 296-800-16030, filed 5/9/01, effective 9/1/01.]

WAC 296-800-16035 Document PPE training. You must:

• Document in writing that each employee using PPE has received and understood the required training.

This documentation must include:

– Name of each employee

– Date(s) of training

– Subject of the training

Note: Documentation may be stored on a computer as long as it is available to safety and health personnel from the department of labor and industries.

[Statutory Authority: RCW 49.17.010, [49.17].040, and [49.17].050. 01-11-038, § 296-800-16035, filed 5/9/01, effective 9/1/01.]

WAC 296-800-16040 Require your employees to use necessary PPE on the job. You must:

• Require your employees to use necessary PPE on the job.

[Statutory Authority: RCW 49.17.010, [49.17].040, and [49.17].050. 01-11-038, § 296-800-16040, filed 5/9/01, effective 9/1/01.]

WAC 296-800-16045 Keep PPE in safe and good condition. You must:

• Make sure all PPE is safe for the work to be performed. It must:

– Be durable.

– Fit snugly.

– Not interfere with the employee's movements.

• Make sure PPE is used and maintained in a clean and reliable condition.

– Defective equipment MUST NOT be used.

• Make sure if employees provide their own PPE, that it is adequate for the workplace hazards, and maintained in a clean and reliable condition.

[Statutory Authority: RCW 49.17.010, [49.17].040, and [49.17].050. 01-11-038, § 296-800-16045, filed 5/9/01, effective 9/1/01.]

WAC 296-800-16050 Make sure your employees use appropriate eye and face protection. You must:

• Make sure that employees exposed to hazards that could injure their eyes and/or face use appropriate protection. Examples of these hazards include:

– Flying particles.

– Molten metal.

– Liquid chemicals.

– Acids or caustic liquids.

– Chemical gases or vapors.

– Any light that could injure the eyes such as lasers, ultraviolet, or infrared light.

– Objects that puncture.

• Make sure employees exposed to hazards from flying objects have eye protection with side protection, such as safety glasses with clip-on or slide-on side shields.

• Make sure eye protection for employees who wear prescription lenses:

– Incorporates the prescription into the design of the eye protection; or

– Is large enough to be worn over the prescription lenses without disturbing them.

• Make sure PPE used to protect the eyes and face meet the following specific ANSI (American National Standards Institute) standards. Most commercially available PPE is marked with the specific ANSI requirements.

– PPE bought before February 20, 1995, must meet ANSI standard Z87.1-1968.

– PPE bought on or after February 20, 1995, must meet ANSI standard Z87.1-1989.

– If you use eye or face protection that does not meet these ANSI standards, you must show they are equally effective.

Note: ANSI is the American National Standards Institute that publishes nationally recognized safety and health requirements. Their address is:
ANSI (American National Standards Institute)
1819 L Street NW
Washington, DC 20036
Phone: (202) 293-8020
Fax: (202) 293-9287
http://www.ansi.org

[Statutory Authority: RCW 49.17.010, [49.17].040, and [49.17].050. 02-16-047, § 296-800-16050, filed 8/1/02, effective 10/1/02; 01-23-060, § 296-800-16050, filed 11/20/01, effective 12/1/01; 01-11-038, § 296-800-16050, filed 5/9/01, effective 9/1/01.]

WAC 296-800-16055 Make sure your employees use appropriate head protection. You must:

(1) Make sure employees wear appropriate protective helmets.

• Where employees are exposed to hazards that could cause a head injury. Examples of this type of hazard include:

– Flying or propelled objects.

– Falling objects or materials.

• Where employees are working around or under scaffolds or other overhead structures.

• That helmets meet the following specific ANSI standards (most commercially available PPE is marked with specific ANSI requirements):

– Protective helmets bought before February 20, 1995, must meet ANSI standard Z89.1-1969.

– Protective helmets bought after February 20, 1995, must meet ANSI standard Z89.1-1986.

– If you use protective helmets that do not meet these ANSI standards, you must show they are equally effective.

(2) Make sure employees working near exposed electrical conductors that could contact their head wear a protective helmet designed (that meet the above ANSI standards) to reduce electrical shock hazard.

• Caps with metal buttons or metal visors must **not** be worn around electrical hazards.

(3) Make sure employees working around machinery or in locations that present a hair-catching or fire hazard wear caps or head coverings that completely cover their hair.

• Employees must wear a hair net that controls all loose ends when:

– Hair is as long as the radius of pressure rolls with exposed in-running nip points.

– Hair is twice as long as the circumference of exposed revolving shafts or tools in fixed machines.

• Employees must wear a hair covering of solid material when:

– The employee is exposed to an ignition source and may run into an area containing class-1 flammable liquids, such as ether, benzene, or combustible atmospheres if their hair is on fire.

[Statutory Authority: RCW 49.17.010, [49.17].040, and [49.17].050. 01-11-038, § 296-800-16055, filed 5/9/01, effective 9/1/01.]

WAC 296-800-16060 Make sure your employees use appropriate foot protection. You must:

(1) Use appropriate foot protection.

• Where employees are exposed to hazards that could injure their feet. Examples of these hazards are:

– Falling objects

– Rolling objects

– Piercing/cutting injuries

– Electrical hazards

• That meets specific ANSI requirements. (Most commercially available PPE is marked with specific ANSI requirements.)

– PPE bought before February 20, 1995, must meet ANSI standard Z41.1-1967.

– PPE bought after February 20, 1995, must meet ANSI standard Z41-1991.

– If you use foot protection that does not meet these ANSI standards, you must show it is equally effective.

(2) Make sure your employees wear calks or other suitable footwear to protect against slipping while they are working on top of logs.

[Statutory Authority: RCW 49.17.010, [49.17].040, and [49.17].050. 01-11-038, § 296-800-16060, filed 5/9/01, effective 9/1/01.]

WAC 296-800-16065 Make sure your employees use appropriate hand protection. You must:

• Make sure employees exposed to hazards that could injure their hands use appropriate hand protection. Examples of these hazards include:

– Absorbing harmful substances

– Severe cuts, lacerations or abrasions

– Punctures

– Chemical burns and/or thermal burns

– Harmful temperature extremes

• Make sure when choosing hand protection, you consider how well the hand protection performs relative to the:

– Task

– Conditions present

– Duration of use

– Hazards

– Potential hazards

[Statutory Authority: RCW 49.17.010, [49.17].040, and [49.17].050. 01-11-038, § 296-800-16065, filed 5/9/01, effective 9/1/01.]

WAC 296-800-16070 Make sure your employees are protected from drowning. You must:

(1) Provide and make sure your employees wear personal flotation devices (PFD).

• When they work in areas where the danger of drowning exists, such as:

– On the water.

– Over the water.

– Alongside the water.

Note: Employees are not exposed to the danger of drowning when:
– Employees are working behind standard height and strength guardrails.
– Employees are working inside operating cabs or stations that eliminate the possibility of accidentally falling into the water.
– Employees are wearing an approved safety belt with a lifeline attached that prevents the possibility of accidentally falling into the water.

You must:

• Provide your employees with PFDs approved by the United States Coast Guard for use on commercial or merchant vessels. The following are appropriate or allowable United States Coast Guard-approved PFDs:

Type of PFD	General Description
Type I	Off-shore life jacket - effective for all waters or where rescue may be delayed.
Type II	Near-shore buoyant vest - intended for calm, inland water or where there is a good chance of quick rescue.
Type III	Flotation aid - good for calm, inland water, or where there is a good chance of rescue.
Type V	Flotation aids such as board-sailing vests, deck suits, work vests and inflatable PFDs marked for commercial use.

Note:
• Commercially available PFDs are marked or imprinted with the type of PFD.
• Type IV PFDs are throwable devices. They are used to aid persons who have fallen into the water.

You must:

• Inspect PFDs before and after each use for defects and make sure that defective PFDs are not used.

(2) Provide approved life rings with an attached line on all docks, walkways, and fixed installations on or adjacent to water more than five feet deep.

• Life rings must:

– Be United States Coast Guard approved 30 inch size.

– Have attached lines that are at least 90 feet in length.

– Have attached lines at least 1/4 inch in diameter.

– Have attached lines with a minimum breaking strength of 500 pounds.

– Be spaced no more than 200 feet apart.

– Be kept in easily visible and readily accessible locations.

• Life rings and attached lines must:

– Be maintained to retain at least 75 percent of their designed buoyancy and strength.

– Be provided in the immediate vicinity when employees are assigned work at other casual locations where the risk of drowning exists.

– Work assigned over water where the vertical drop from an accidental fall would be more than 50 feet, must be subject to specific procedures as approved by the department.

[Statutory Authority: RCW 49.17.010, [49.17].040, and [49.17].050. 02-16-047, § 296-800-16070, filed 8/1/02, effective 10/1/02; 01-11-038, § 296-800-16070, filed 5/9/01, effective 9/1/01.]

EMPLOYER—CHEMICAL HAZARD COMMUNICATION INTRODUCTION

WAC 296-800-170 Employer chemical hazard communication—Introduction.

IMPORTANT:

Thousands of chemicals can be found in today's workplaces. These chemicals may have the capacity to cause health problems, from minor skin irritations to serious injuries or diseases like cancer. You should review the type of chemicals you use and consider using less hazardous chemicals (such as less toxic and nonflammable chemicals).

The Employer Chemical Hazard Communication rule was developed to make sure employers and employees are informed about chemical hazards in the workplace.

This rule applies to:

• Employers engaged in businesses where chemicals are used, distributed, or produced for use or distribution.

• Contractors or subcontractors that work for employers engaged in businesses where chemicals are used, distributed, or produced for use or distribution.

Exemptions:
• Certain products, chemicals, or items are exempt from this rule. Below is a summarized list of these exemptions. See WAC 296-800-17055 at the end of this rule to get complete information about these exemptions:
– Any hazardous waste or substance
– Tobacco or tobacco products
– Wood or wood products that are not chemically treated and will not be processed, for example, by sawing and sanding
– Food or alcoholic beverages
– Some drugs, such as retail or prescription medications
– Retail cosmetics
– Ionizing and nonionizing radiation
– Biological hazards
– Any consumer product or hazardous substance when workplace exposure is the same as that of a consumer
❖ Retail products used in offices in the same manner and frequency used by consumers can be termed "consumer products", and include things such as: Correction fluid, glass cleaner, and dishwashing liquid.

Example: If you use a household cleaner in your workplace in the same manner and frequency that a consumer would use it when cleaning their house, your exposure should be the same as the consumer's, you are exempt. A janitor using a household cleaner, such as bleach, throughout the day, is not considered to be a consumer, and is not exempt.
– Manufactured items that remain intact are exempt from this rule.
– Manufactured items that are fluids or in the form of particles are not exempt from this rule.

The following are examples:

Item	Covered by this rule	Not covered by this rule
Brick	Sawed or cut in half	Used whole or intact
Pipe	Cut by a torch	Bent with a tube bender
Nylon Rope	Burning the ends	Tying a knot

Reference:
- If you produce, import, distribute and/or repackage chemicals, or choose not to rely on labels or material safety data sheets provided by the manufacturer or importer, you must comply with chemical hazard communication for manufacturers, importers and distributers, WAC 296-62-054.
- You may withhold trade secret information under certain circumstances. See trade secrets, WAC 296-62-053, to find out what information may be withheld as a trade secret and what information must be released.

Your responsibility:

To inform and train your employees about the hazards of chemicals they may be exposed to during normal working conditions, or in foreseeable emergencies by:

• Making a list of the hazardous chemicals present in your workplace

• Preparing a written Chemical Hazard Communication Program for your workplace

• Informing your employees about this rule and your program

• Providing training to your employees about working in the presence of hazardous chemicals

• Getting and keeping the material safety data sheets (MSDSs) for the hazardous chemicals

• Making sure that labels on containers of hazardous chemicals are in place and easy to read.

You must:

Develop, implement, maintain, and make available a written Chemical Hazard Communication Program.

WAC 296-800-17005.

Include multiemployer workplaces in your program if necessary.

WAC 296-800-17007.

Identify and list all the hazardous chemicals present in your workplace.

WAC 296-800-17010.

Obtain and maintain material safety data sheets (MSDS) for each hazardous chemical used.

WAC 296-800-17015.

Make sure that material safety data sheets (MSDS) are readily accessible to your employees and NIOSH.

WAC 296-800-17020.

Label containers holding hazardous chemicals.

WAC 296-800-17025.

Inform and train your employees about hazardous chemicals in your workplace.

WAC 296-800-17030.

Follow these rules for laboratories using hazardous chemicals.

WAC 296-800-17035.

Follow these rules for handling chemicals in factory sealed containers.

WAC 296-800-17040.

The department must:

Translate certain chemical hazard communication documents upon request.

WAC 296-800-17045.

Attempt to obtain a material safety data sheet (MSDS) upon request.

WAC 296-800-17050.

Exemption:

Items or chemicals exempt from the rule, and exemptions from labeling.

WAC 296-800-17055.

[Statutory Authority: RCW 49.17.010, 49.17.040, 49.17.050, and 49.17.060. 03-18-090, § 296-800-170, filed 9/2/03, effective 11/1/03. Statutory Authority: RCW 49.17.010, [49.17].040, and [49.17].050. 02-16-047, § 296-800-170, filed 8/1/02, effective 10/1/02; 01-23-060, § 296-800-170, filed 11/20/01, effective 12/1/01; 01-11-038, § 296-800-170, filed 5/9/01, effective 9/1/01.]

WAC 296-800-17005 Develop, implement, maintain, and make available a written Chemical Hazard Communication Program.

You must:

• Develop, implement, maintain, and make available a written Chemical Hazard Communication Program specific to your workplace. The Chemical Hazard Communication Program must, at a minimum, include:

– A list of hazardous chemicals known to be present in your workplace.

– Procedures for making sure all containers are properly labeled.

– A description of how you are going to obtain and maintain your material safety data sheets (MSDSs).

– A description of how you are going to train and inform your employees about hazardous chemicals in their workplace.

– A description of how you are going to inform your employees about:

❖ Chemical hazards used during nonroutine tasks.

❖ The hazards associated with chemicals contained in unlabeled pipes in employee work areas.

You must:

• Make your Chemical Hazard Communication Program available to your employees.

Note:
- You must make the written Chemical Hazard Communication Program available, upon request, to employees, their designated representatives, the department and NIOSH, in accordance with the requirements of chapter 296-802 WAC, Employee medical and exposure records.
- Where employees must travel between workplaces during a workshift, that is, if their work is carried out at more than one geographical location, the written Chemical Hazard Communication Program may be kept at the primary workplace facility.

[Statutory Authority: RCW 49.17.010, 49.17.040, 49.17.050, and 49.17.060. 04-10-026, § 296-800-17005, filed 4/27/04, effective 8/1/04; 03-18-090, § 296-800-17005, filed 9/2/03, effective 11/1/03. Statutory Authority: RCW 49.17.010, [49.17].040, and [49.17].050. 01-23-060, § 296-800-17005, filed 11/20/01, effective 12/1/01; 01-11-038, § 296-800-17005, filed 5/9/01, effective 9/1/01.]

WAC 296-800-17007 Include multiemployer workplaces in your program if necessary.

IMPORTANT:

• Sharing chemical hazard information at multiemployer workplaces is required for the success of your hazard communication program and the success of other employers' programs.

• This section applies to a site where you or your employees work if:

– Your employees may be exposed to hazardous chemicals used by another employer;

OR

– Another employer's employees may be exposed to hazardous chemicals you or your employees use.

Examples include employees of construction companies, cleaning services, or maintenance contractors visiting or working on-site.

You must:

• Include, in your written Chemical Hazard Communication Program, the methods you will use to share the following hazard information with other employers when their employees share a workplace with you and are potentially exposed to chemicals you produce, use, or store:

– How you will provide other employers with a copy of the relevant material safety data sheets (MSDSs), or provide access to the MSDSs in a specified location.

– How you will inform the other employers of any precautionary measures needed to protect employees during normal operating conditions and in foreseeable emergencies.

– A description of how you will inform other employers of the labeling system you use.

Note: You may rely on another employer's Chemical Hazard Communication Program to share the information required if the program meets the requirements of this rule.

[Statutory Authority: RCW 49.17.010, 49.17.040, 49.17.050, and 49.17.060. 03-18-090, § 296-800-17007, filed 9/2/03, effective 11/1/03.]

WAC 296-800-17010 Identify and list all the hazardous chemicals present in your workplace. You must:

• Identify all hazardous chemicals at your workplace.

– This includes any chemical that is known to be present in your workplace in such a way that employees may be exposed to it under normal conditions of use or in a foreseeable emergency.

• Create a list of these chemicals using the chemical or common name on the material safety data sheet (MSDS).

This list:

– Must be compiled for the workplace as a whole, or for individual work areas.

– Is necessary to make sure that all hazardous chemicals are identified and that MSDS, and labeling rules are met.

– Must be current.

Note: The following are some ways to determine whether a product is hazardous:

- Look for words on the label, such as "CAUTION," "WARNING," or "DANGER."
- Look for words or "hazard coding" that indicate that the chemical is flammable, an irritant, corrosive, carcinogenic, etc. "Hazard coding" refers to words, numbers, or colors that tell you a chemical is dangerous.
- Check the product's MSDS for hazard information.

Examples of hazardous chemicals are: Acids, adhesives, caustics, fuels, paints, varnishes, shellacs and pesticides. Too many other classes of hazardous chemicals exist to list them all here. If you have any questions about a chemical you have at your workplace, contact your local L&I office (see the resource section of this book).

[Statutory Authority: RCW 49.17.010, [49.17].040, and [49.17].050. 01-23-060, § 296-800-17010, filed 11/20/01, effective 12/1/01; 01-11-038, § 296-800-17010, filed 5/9/01, effective 9/1/01.]

WAC 296-800-17015 Obtain and maintain material safety data sheets (MSDSs) for each hazardous chemical used.

Note: MSDSs are a type of employee exposure record. Therefore, you must comply with the material safety data sheets (MSDSs) as exposure records, WAC 296-800-180, located in this book.

You must:

• Obtain a MSDS for each hazardous chemical used as soon as possible if the MSDS is not provided with the shipment of a hazardous chemical, from the chemical manufacturer or importer.

Note:

- To obtain a MSDS, you may try calling the manufacturer or checking their website.
- If you have a commercial account with a retailer or wholesaler, you have the right to request and receive a MSDS about hazardous chemicals you purchase.
- If a chemical is purchased from a retailer with no commercial accounts, you have the right to request and receive the manufacturer's name and address so that you can contact them and request a MSDS for the chemical.
- Whoever prepares the MSDS is required to mark all blocks on the form, even if there is no relevant information for that section.
- If you have problems getting a MSDS within 30 calendar days after making a written request to the chemical manufacturer, importer, or distributor, you can get help from WISHA. You may contact your local regional office for assistance or make a written request for assistance to the:
  Department of Labor and Industries
  Right-to-Know Program
  P.O. Box 44610
  Olympia, Washington 98504-4610.
  Include in your request:
  - A copy of the purchaser's written request to the chemical manufacturer, importer, or distributor.
  - The name of the product suspected of containing a hazardous chemical.
  - The identification number of the product, if available.
  - A copy of the product label, if available.
  - The name and address of the chemical manufacturer, importer, or distributor from whom the product was obtained.

You must:

• Maintain a MSDS for each hazardous chemical:

– Keep copies of the required MSDSs for each hazardous chemical present in your workplace.

– Each MSDS must be in English. You may also keep copies in other languages.

Reference: See material safety data sheets and label preparation, chapter 296-839 WAC, if you choose to create your own MSDS or label.

[Statutory Authority: RCW 49.17.010, 49.17.040, 49.17.050, and 49.17.060. 03-18-090, § 296-800-17015, filed 9/2/03, effective 11/1/03. Statutory Authority: RCW 49.17.010, [49.17].040, and [49.17].050. 01-23-060, § 296-800-17015, filed 11/20/01, effective 12/1/01; 01-11-038, § 296-800-17015, filed 5/9/01, effective 9/1/01.]

WAC 296-800-17020 Make sure material safety data sheets (MSDSs) are readily accessible to your employees and NIOSH.

You must:

• Make sure that MSDSs are readily accessible, easily obtained without delay during each work shift by employees when they are in their work area(s).

• Make sure that employees, who must travel between workplaces during a work shift, such as when their work is carried out at more than one geographical location, can immediately obtain the required MSDS information in an emergency. (MSDSs may be kept at a central location at the

primary workplace facility and accessed by means such as voice communication or laptop computer.)

Note:
- Electronic access (such as computer or fax), microfiche, and other alternatives to maintaining paper copies of the MSDSs are permitted as long as they do not create barriers to immediate employee access in each workplace.
- Barriers to immediate access of electronic MSDSs may include:
  - Power outages
    Equipment failure
  - System delays
  - Deficient user knowledge to operate equipment
  - Location of equipment outside the work area.
    Solutions to eliminating these and other possible barriers to access may require the availability of back-up systems, employee training, and providing access equipment in the work areas.

You must:

• Make MSDSs readily available, when requested, to representatives of the National Institute for Occupational Safety and Health (NIOSH).

[Statutory Authority: RCW 49.17.010, 49.17.040, 49.17.050, and 49.17.060. 03-18-090, § 296-800-17020, filed 9/2/03, effective 11/1/03. Statutory Authority: RCW 49.17.010, [49.17].040, and [49.17].050. 02-16-047, § 296-800-17020, filed 8/1/02, effective 10/1/02; 01-23-060, § 296-800-17020, filed 11/20/01, effective 12/1/01; 01-11-038, § 296-800-17020, filed 5/9/01, effective 9/1/01.]

WAC 296-800-17025 Label containers holding hazardous chemicals.

Exemptions:
- The following is a summary of items that are exempt from this rule:
  - Pesticides, when labeled as required by the Environmental Protection Agency (EPA).
  - Food, food additives, color additives, drugs, cosmetics, or medical/veterinary devices or products.
  - Alcoholic beverages not intended for industrial use.
  - Consumer products labeled as required by the Consumer Product Safety Commission.
  - Agriculture or vegetable seeds treated and labeled as required by the Federal Seed Act.
    For complete information about each of these, see WAC 296-800-17055.

Note: You are not required to label portable containers into which hazardous chemicals are transferred from labeled containers, if the chemical is used and controlled by the same employee who performed the transfer within the same shift.

You must:

• Make sure that each container of hazardous chemicals in the workplace is labeled, tagged, or marked with the following information:

– The identity of the hazardous chemical(s) using either the chemical or common name.

– Appropriate hazard warnings which give general information about the relevant health and physical hazards of the chemicals. This includes health effects information, such as information about organs most likely to be affected by the chemicals.

– For individual stationary process containers, you may use alternate labeling methods such as:

❖ Signs
❖ Placards
❖ Process sheets
❖ Batch tickets
❖ Operating procedures or
❖ Other such written materials,

as long as the alternate method identifies the containers and conveys the required label information.

Note:
- You do not need to put on new labels if existing labels already provide the required information.
- You are not required to list each component in a hazardous mixture on the label. If a mixture is referred to on an MSDS by a product name, then the product name should be used as the identifier.
- You may use words, pictures, symbols, or any combination of these, to communicate the hazards of the chemical.

Sample Container Labels

- Be sure to train your employees so they can demonstrate a knowledge of the labeling system you use.
- Some alternative labeling systems do no communicate target organ information, so the employee will have to rely on training provided by the employer to obtain this information.

You must:

• Not remove or deface existing labels on incoming containers of hazardous chemicals unless the container is immediately labeled with the required information.

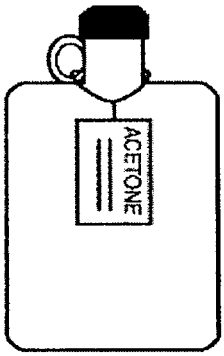

This is an example of a labeled container. You may use a laminated or coated label, affixed to the container with a wire, to avoid deterioration of labels due to a solvent, such as acetone.

You must:

• Make sure that labels or other forms of warning are legible, in English, and prominently displayed on the container, or readily available in the work area throughout each work shift.

Note: Employers with non-English speaking employees may use other languages in the warning information in addition to the English language.

• Make sure if the hazardous chemical is regulated by WISHA or OSHA in a substance-specific health rule, that the labels or other warnings are used according to those rules.

[Statutory Authority: RCW 49.17.010, [49.17].040, and [49.17].050. 02-16-047, § 296-800-17025, filed 8/1/02, effective 10/1/02; 01-23-060, § 296-800-17025, filed 11/20/01, effective 12/1/01; 01-11-038, § 296-800-17025, filed 5/9/01, effective 9/1/01.]

WAC 296-800-17030 Inform and train your employees about hazardous chemicals in your workplace. You must:

• Provide employees with effective information on hazardous chemicals in their work area at the time of their initial job assignment. Whenever a new physical or health hazard related to chemical exposure is introduced into their employees' work areas, information must be provided.

– Inform employees of:

❖ The requirements of this rule

❖ Any operations in their work area where hazardous chemicals are present

❖ The location and availability of your written Chemical Hazard Communication Program, including the list(s) of hazardous chemicals and material safety data sheets (MSDSs) required by this rule.

• Provide employees with effective training about hazardous chemicals in their work area at the time of their initial job assignment. Whenever a new physical or health hazard related to chemical exposure is introduced, the employees must be trained.

• Make sure employee training includes:

– Methods and observations that may be used to detect the presence or release of a hazardous chemical in the work area. Examples of these methods and observations may include:

❖ Monitoring conducted by you

❖ Continuous monitoring devices

❖ Visual appearance or odor of hazardous chemicals when being released

– Physical and health hazards of the chemicals in the work area, including the likely physical symptoms or effects of overexposure

– Steps employees can take to protect themselves from the chemical hazards in your workplace, including specific procedures implemented by you to protect employees from exposure to hazardous chemicals. Specific procedures may include:

❖ Appropriate work practices

❖ Engineering controls

❖ Emergency procedures

❖ Personal protective equipment to be used

– Details of the chemical hazard communication program developed by you, including an explanation of the labeling system and the MSDS, and how employees can obtain and use the appropriate hazard information.

• Tailor information and training to the types of hazards to which employees will be exposed. The information and training may be designed to cover categories of hazards, such as flammability or cancer-causing potential, or it may address specific chemicals. Chemical-specific information must always be available through labels and MSDSs

• Make reasonable efforts to post notices in your employees' native languages (as provided by the department) if those employees have trouble communicating in English.

Note:
- Interactive computer-based training or training videos can be used provided they are effective.
- Your MSDSs may not have WISHA permissible exposure limits (PELs) listed. In some cases, WISHA PELs are stricter than the OSHA PELs and other exposure limits listed on the MSDSs you receive. If this is the case, you must refer to the WISHA PEL table, WAC 296-62-075, for the appropriate exposure limits to be covered during training.

[Statutory Authority: RCW 49.17.010, [49.17].040, and [49.17].050. 02-16-047, § 296-800-17030, filed 8/1/02, effective 10/1/02; 01-23-060, § 296-800-17030, filed 11/20/01, effective 12/1/01; 01-11-038, § 296-800-17030, filed 5/9/01, effective 9/1/01.]

WAC 296-800-17035 Follow these rules for laboratories using hazardous chemicals.

Note:
- Laboratories are required to have a written Chemical hygiene plan under WAC 296-62-400, if applicable. They are **not** required to have a written Chemical Hazard Communication Program.
- You may combine your accident prevention program and chemical hazard communication program to assist you in developing a chemical hygiene plan for your laboratory.

You must:

(1) Make sure that labels on incoming containers of hazardous chemicals are in place and readable.

(2) Maintain material safety data sheets (MSDSs) received with incoming shipments of hazardous chemicals and make them readily accessible to laboratory employees when they are in their work areas.

(3) Provide laboratory employees with information and training as described in: "Inform and train your employees about hazardous chemicals in your workplace," WAC 296-800-17030. You do not have to cover the location and the availability of the Hazard Communication Program.

Note: Laboratory employers that ship hazardous chemicals are considered to be either chemical manufacturers or distributors. When laboratory employers ship hazardous chemicals they must comply with the rule, "hazard communication standards for chemical manufacturers, importers and distributors," WAC 296-62-054.

[Statutory Authority: RCW 49.17.010, [49.17].040, and [49.17].050. 01-23-060, § 296-800-17035, filed 11/20/01, effective 12/1/01; 01-11-038, § 296-800-17035, filed 5/9/01, effective 9/1/01.]

WAC 296-800-17040 Follow these rules for handling chemicals in factory-sealed containers. This applies to situations where employees only handle chemicals in factory-sealed containers that are not opened under normal use (such as those found in marine cargo handling, trucking, warehousing, or retail sales).

You must:

(1) Make sure that labels on incoming containers of hazardous chemicals are in place and readable.

(2) Keep or obtain material safety data sheets (MSDSs).

• Keep any MSDSs that are received with incoming shipments of the sealed containers of hazardous chemicals.

• If a factory-sealed container of hazardous chemicals comes without a MSDS, obtain one as soon as possible, if an employee requests it.

(3) Make sure that the MSDSs are readily accessible during each work shift to employees when they are in their work area(s).

(4) Inform and train your employees about hazardous chemicals in your workplace, to protect them in case of a hazardous chemical spill or leak from a factory-sealed container. You do not have to cover the location and availability of the written Chemical Hazard Communication Program.

[Statutory Authority: RCW 49.17.010, [49.17].040, and [49.17].050. 01-23-060, § 296-800-17040, filed 11/20/01, effective 12/1/01; 01-11-038, § 296-800-17040, filed 5/9/01, effective 9/1/01.]

WAC 296-800-17045 Translate certain chemical hazard communication documents upon request. The department must:

• Upon receipt of a written or verbal request, prepare and make available (within available resources) to employers or the public, a translation into Cambodian, Chinese, Korean, Spanish, or Vietnamese of any of the following:

– An employer's written Chemical Hazard Communication Program.

– A material safety data sheet or

– Written materials prepared by the department to inform employees of their rights described in this rule, regarding chemical hazard communication.

Note: Written requests for translations should be directed to:
Department of Labor and Industries
Right-to-Know Program
P.O. Box 44610
Olympia, Washington 98504-4610.

[Statutory Authority: RCW 49.17.010, [49.17].040, and [49.17].050. 01-11-038, § 296-800-17045, filed 5/9/01, effective 9/1/01.]

WAC 296-800-17050 Attempt to obtain a material safety data sheet (MSDS) upon request. The department must:

• Upon receipt of an employer's written request for a material safety data sheet, attempt to obtain the MSDS from the chemical manufacturer, importer, or distributor. When the department receives the MSDS, the department must forward a copy of it to the purchaser at no cost. Small business employers will be given priority for this service.

[Statutory Authority: RCW 49.17.010, [49.17].040, and [49.17].050. 01-11-038, § 296-800-17050, filed 5/9/01, effective 9/1/01.]

WAC 296-800-17055 Items or chemicals exempt from the rule, and exemptions from labeling.

• Listed below are the full descriptions of the items or chemicals that are exempt, or not covered, by this rule:

– Any consumer product or hazardous substance, defined in the Consumer Product Safety Act (15 U.S.C. 2051 et seq.) and Federal Hazardous Substance Act (15 U.S.C. 1261 et seq.) respectively, where you can show that it is used in the workplace for the purpose intended by the chemical manufacturer or importer of the product, and the use results in a duration and frequency of exposure that is not greater than the range of exposures that could reasonably be experienced by consumers when used for the purpose intended.

– Any hazardous waste defined by the Hazardous Waste Management Act chapter 70.105 RCW, when subject to regulations issued under that act by the department of ecology that describes specific safety, labeling, personnel training, and other rules for the accumulation, handling and management of hazardous waste.

– Any hazardous waste defined by the Solid Waste Disposal Act, as amended by the Resource Conservation and Recovery Act of 1976, as amended (42 U.S.C. 6901 et seq.), when subject to regulations issued under that act by the Environmental Protection Agency.

– Any hazardous substance defined by the Comprehensive Environmental Response, Compensation and Liability Act (CERCLA) (42 U.S.C. 9601 et seq.), when the hazardous substance is the focus of remedial or removal action being conducted under CERCLA in accordance with Environmental Protection Agency regulations.

– Tobacco or tobacco products.

– Wood or wood products, including lumber that will not be processed, where the chemical manufacturer or importer can establish that the only hazard they pose to the employees is the potential for flammability or combustibility. Wood or wood products that have been treated with hazardous chemicals covered by this rule, and wood that may be subsequently sawed or cut, generating dust, are not exempted.

– Articles, meaning manufactured items other than a fluid or particle that:

❖ Are formed to a specific shape or design during manufacture;

❖ Have end use function(s) dependent in whole or in part upon their shape or design during end use; and

❖ Under normal conditions of use, do not release more than very small quantities, for example, minute or trace amounts of a hazardous chemical such as, emissions from a marking pen or a newly varnished wood chair, and do not pose a physical hazard or health risk to employees

– Food or alcoholic beverages that are sold, used, or prepared in a retail establishment such as a grocery store, restaurant, or drinking place, and foods intended for personal consumption by employees while in the workplace.

– Any drug, defined in the Federal Food, Drug, and Cosmetic Act (21 U.S.C. 301 et seq.), when it is in solid, final form for direct administration to the patient (for example, tablets or pills); drugs that are packaged by the chemical manufacturer for sale to consumers in a retail establishment (for example, over-the-counter drugs); and drugs intended for personal consumption by employees while in the workplace (for example, first-aid supplies). Aerosolized or cytotoxic drugs administered by a health care worker are not excluded.

– Cosmetics packaged for sale to consumers in a retail establishment, and cosmetics intended for personal consumption by employees while in the workplace.

– Ionizing and nonionizing radiation.

– Biological hazards.

• This rule does not require labeling of the following chemicals:

– Any pesticide defined in the Federal Insecticide, Fungicide, and Rodenticide Act (7 U.S.C. 136 et seq.), when subject to the labeling requirements of that act and labeling regulations issued under that act by the Environmental Protection Agency.

– Any chemical substance or mixture defined in the Toxic Substance Control Act (15 U.S.C. 2601 et seq.), when subject to the labeling requirements of that act, and labeling requirements issued under that act by the Environmental Protection Agency.

– Any food, food additive, color additive, drug, cosmetic, or medical/veterinary device or product, including materials intended for use as ingredients in such products (for example, flavors and fragrances), are defined in the Federal Food, Drug, and Cosmetic Act (21 U.S.C. 301 et seq.) or the Virus-Serum Toxin Act of 1913 (21 U.S.C. 151 et seq.) and regulations issued under those acts, when they are subject to the labeling requirements under those acts by either the Food and Drug Administration or the Department of Agriculture.

– Any distilled spirits (beverage alcohols), wine, or malt beverage intended for nonindustrial use, defined in the Federal Alcohol Administration Act (27 U.S.C. 201 et seq.) and regulations issued under that act, when subject to the labeling requirements of that act and labeling regulations issued under that act by the Bureau of Alcohol, Tobacco, and Firearms.

– Any consumer product or hazardous substance defined in the Consumer Product Safety Act (15 U.S.C. 2051 et seq.) and Federal Hazardous Substances Act (15 U.S.C. 1261 et seq.) respectively, when subject to a consumer product safety rule or labeling requirement of those acts, or regulations issued under those acts by the Consumer Product Safety Commission.

– Agricultural or vegetable seed treated with pesticides and labeled in accordance with the Federal Seed Act (7 U.S.C. 1551 et seq.) and the labeling requirements issued under that act by the Department of Agriculture.

[Statutory Authority: RCW 49.17.010, [49.17].040, and [49.17].050. 01-11-038, § 296-800-17055, filed 5/9/01, effective 9/1/01.]

WAC 296-800-180 Material safety data sheets (MSDSs) as exposure records. Important: Exposure records contain information about employees' exposure to toxic substances or harmful physical agents. Material safety data sheets (MSDSs) are one type of exposure record. The preservation of and access to exposure records is necessary to improve detection, treatment, and prevention of occupational diseases.

This rule supplements the chemical hazard communication rule by extending access to MSDSs, or their alternative, after employment and after the hazardous chemical is no longer used in the workplace.

Your responsibility:

To preserve and provide access to material safety data sheets (MSDSs) or their alternative as exposure records.

You must:

Preserve exposure records for at least 30 years.

WAC 296-800-18005.

Inform current employees of exposure records.

WAC 296-800-18010.

Provide access to exposure records.

WAC 296-800-18015.

Transfer records when ceasing to do business.

WAC 296-800-18020.

Note:
- Employee medical and exposure records, chapter 296-802 WAC, requires the preservation and access to other exposure records including records such as workplace monitoring data and biological monitoring results and medical records. If you keep these other types of employee exposure records or employee medical records, you must comply with these additional requirements.
- This rule applies to every employer who maintains, makes, contracts for, or has access to MSDSs for chemicals used in their workplace.
- The specific identity of a toxic substance may be withheld from a disclosable record if it is a verifiable trade secret. For trade secret requirements see chapter 296-816 WAC.

[Statutory Authority: RCW 49.17.010, 49.17.040, 49.17.050, and 49.17.060. 04-10-026, § 296-800-180, filed 4/27/04, effective 8/1/04. Statutory Authority: RCW 49.17.010, [49.17].040, and [49.17].050. 01-23-060, § 296-800-180, filed 11/20/01, effective 12/1/01; 01-11-038, § 296-800-180, filed 5/9/01, effective 9/1/01.]

WAC 296-800-18005 Preserve exposure records for at least 30 years. You must:

• Keep material safety data sheets (MSDSs) and analysis using MSDSs for at least thirty years, including current, former, and future employers receiving transferred records. Preserve MSDSs in any form, as long as the information is not altered and is retrievable. You may keep alternative records instead of MSDSs concerning the identity of a substance. The alternative record must also be kept for thirty years and contain the following information:

– Some record of the identity (chemical name, if known) of a substance or agent

– Where the substance or agent was used

– When the substance or agent was used

Note: Keeping alternative records may be less work than you think. When developing your hazard communication program's list of hazardous chemicals (WAC 296-800-17010), add the "where used" and "when used" information required by this rule.

[Statutory Authority: RCW 49.17.010, [49.17].040, and [49.17].050. 01-11-038, § 296-800-18005, filed 5/9/01, effective 9/1/01.]

WAC 296-800-18010 Inform current employees of exposure records. You must:

• Inform current employees who are, or will be exposed to a toxic chemical of:

Note: A chemical is toxic if:
- The latest printed edition of the National Institute for Occupational Safety and Health (NIOSH) Registry of Toxic Effects of Chemical Substances (RTECS) lists the substance. This may be obtained on-line, CD-ROM, or on a computer tape.
- Testing by or known to the employer has shown positive evidence that the substance is an acute or chronic health hazard.
- A material safety data sheet (MSDS) kept by or known to the employer shows the material may be a hazard to human health.

– The existence, location, and availability of MSDSs or alternative records, and any other records covered by this rule.

– The person responsible for maintaining and providing access to records.

– Exposure records when the employee first enters into employment and then once a year thereafter.

– Existence and their rights of access to these records.

Note: Informing employees of the availability of these records may be accomplished by posting, group discussion or by individual notifications.

You must:

• Keep a copy of this rule and make copies available upon request to employees.

• Distribute to employees any informational materials about this rule that are made available to the employer by the department.

[Statutory Authority: RCW 49.17.010, [49.17].040, and [49.17].050. 02-16-047, § 296-800-18010, filed 8/1/02, effective 10/1/02; 01-11-038, § 296-800-18010, filed 5/9/01, effective 9/1/01.]

WAC 296-800-18015 Provide access to exposure records. You must:

• Provide access, whenever requested by an employee or their designated representative, to a relevant exposure record:

– In a reasonable time, place, and manner.

– Within fifteen working days. If the employer cannot meet this requirement, they must inform the requesting party of the reason for the delay and the earliest date the record will be made available.

Note: • Employee means any current, former or transferred worker.
• A relevant exposure record is an MSDS or its alternative or analysis using MSDSs or their alternative.

You must:

• Make sure labor and industries has prompt access to any exposure records and related analysis. This must be done without violation of any rights under the Constitution or the Washington Industrial Safety and Health Act that the employer chooses to exercise.

Note: Nothing in this rule is meant to prevent employees and collective bargaining agents from getting access to information beyond that is required by this rule.

You must:

• Make sure that whenever an employee or designated representative requests an initial copy of an exposure record, related analysis or new information added to the record:

– A copy of the record is provided without cost to the employee or their representative or

– The facilities are made available for copying without cost to the employee or their representative or

– The record is loaned to the employee or their representative for a reasonable time to enable a copy to be made.

Note: Whenever a record has been previously provided without cost to an employee or designated representative, and they request additional copies, the employer may charge reasonable, nondiscriminatory administrative costs (e.g., search and copying expenses, but no overhead expenses).

[Statutory Authority: RCW 49.17.010, [49.17].040, and [49.17].050. 02-16-047, § 296-800-18015, filed 8/1/02, effective 10/1/02; 01-23-060, § 296-800-18015, filed 11/20/01, effective 12/1/01; 01-11-038, § 296-800-18015, filed 5/9/01, effective 9/1/01.]

WAC 296-800-18020 Transfer records when ceasing to do business. You must:

• Transfer all material safety data sheets (MSDSs) as exposure records to the successor employer, who must do the following to these records:

– Received

– Preserve

– Keep unchanged

• If there is no successor to receive and preserve the employee exposure records:

– Notify affected current employees of their rights of access to records at least 3 months prior to the cessation of the employer's business

and

– Transfer the records to the department, if required by a specific WISHA safety and health rule.

[Statutory Authority: RCW 49.17.010, [49.17].040, and [49.17].050. 01-23-060, § 296-800-18020, filed 11/20/01, effective 12/1/01; 01-11-038, § 296-800-18020, filed 5/9/01, effective 9/1/01.]

SAFETY BULLETIN BOARD

WAC 296-800-190 Summary/rule. Your responsibility: To provide a safety bulletin board.

[Statutory Authority: RCW 49.17.010, [49.17].040, and [49.17].050. 01-11-038, § 296-800-190, filed 5/9/01, effective 9/1/01.]

WAC 296-800-19005 Provide a safety bulletin board in your workplace. You must:

• Install and maintain a safety bulletin board in every fixed workplace (establishment) that has eight or more employees. Make sure the safety bulletin board is large enough to post information such as the following:

– Safety bulletins

– Safety newsletters

– Safety posters

– Accident statistics

– Other safety educational material.

Note: You may want to post your emergency phone numbers on the safety bulletin board.

[Statutory Authority: RCW 49.17.010, [49.17].040, and [49.17].050. 01-11-038, § 296-800-19005, filed 5/9/01, effective 9/1/01.]

WISHA POSTER

WAC 296-800-200 WISHA poster. Your responsibility: To post the WISHA poster, which informs your employees of their job safety and health protection rights.

[Statutory Authority: RCW 49.17.010, [49.17].040, and [49.17].050. 01-11-038, § 296-800-200, filed 5/9/01, effective 9/1/01.]

WAC 296-800-20005 Post and keep a WISHA poster in your workplace. You must:

• Post it where it can easily be seen by employees and keep it in good condition.

Note: • Other programs within labor and industries may require other workplace posters. These are:
– Job safety and health protection
AND
– Notice to employees—If a job injury occurs
AND
– Your rights as a nonagricultural worker
• You can obtain a free copy of labor and industries posters from any labor and industries office or by printing it off our website (http://www.lni.wa.gov/ipub/101-054-000.htm). You can find the labor and industries office closest to you by:
• Checking the resource section of this book for regional offices.
OR
– Calling 1-800-4BE SAFE (1-800-423-7233)
OR
– http://www.lni.wa.gov/wisha/question.htm#contact.

[Statutory Authority: RCW 49.17.010, [49.17].040, and [49.17].050. 02-16-047, § 296-800-20005, filed 8/1/02, effective 10/1/02; 01-23-060, § 296-800-20005, filed 11/20/01, effective 12/1/01; 01-11-038, § 296-800-20005, filed 5/9/01, effective 9/1/01.]

LIGHTING

WAC 296-800-210 Lighting. Your responsibility: To provide and maintain adequate lighting in your workplace.

[Statutory Authority: RCW 49.17.010, [49.17].040, and [49.17].050. 01-11-038, § 296-800-210, filed 5/9/01, effective 9/1/01.]

WAC 296-800-21005 Provide and maintain adequate lighting.

Note: This section establishes minimal levels of lighting for safety purposes only. Guidelines pertaining to optimal levels of lighting and illumination may be found in Practice for Industrial Lighting, ANSI/IES RP7-1979. (See the resource section of this book on how to contact ANSI.)

You must:

• Provide and maintain adequate lighting for all work activities in your workplace. See the following table.

Lighting Table

Activity	Minimum acceptable average lighting level in an area: (Foot-candles)	Any one single measurement used to determine the average lighting level* cannot be less than: (Foot-candles)
Indoor task	10	5
Outdoor task	5	2.5
Nontask activities for both indoor and outdoor	3	1.5

* Lighting levels must be measured at thirty inches above the floor/working surface at the task.

You must:

• Have adequate light for employees to see nearby objects that might be potential hazards or to see to operate emergency controls or other equipment, if general lighting is not available.

Note: • Lighting levels can be measured with a light meter.
• Conversion information: 1 foot-candle = 1 lumen incident per square foot = 10.76 lux.

[Statutory Authority: RCW 49.17.010, [49.17].040, and [49.17].050. 01-23-060, § 296-800-21005, filed 11/20/01, effective 12/1/01; 01-11-038, § 296-800-21005, filed 5/9/01, effective 9/1/01.]

HOUSEKEEPING, DRAINAGE, AND STORAGE

WAC 296-800-220 Housekeeping, drainage, and storage—Summary. Your responsibility: To provide your employees with a clean, dry, pest-free workplace.

Note: The introduction has important information about building, electrical and fire codes that may apply to you in addition to WISHA rules. See "How do the WISHA rules relate to building, fire, and electrical codes" in the introduction section of this book.

You must:

Housekeeping

Keep your workplace clean.
WAC 296-800-22005.

Sweep and clean your workplace to minimize dust.
WAC 296-800-22010.

Keep your workplace free of obstacles that interfere with cleaning.
WAC 296-800-22015.

Control pests in your workplace.
WAC 296-800-22020.

Make sure floors are maintained in a safe condition.
WAC 296-800-22022.

Drainage

Keep your workroom floors dry, when practical.
WAC 296-800-22025.

Provide proper drainage.
WAC 296-800-22030.

Storage areas

Store things safely.
WAC 296-800-22035.

Control vegetation in your storage areas.
WAC 296-800-22040.

[Statutory Authority: RCW 49.17.010, [49.17].040, and [49.17].050. 01-11-038, § 296-800-220, filed 5/9/01, effective 9/1/01.]

HOUSEKEEPING

WAC 296-800-22005 Keep your workplace clean. You must:

• Keep all areas of you workplace, passageways, storage rooms, and service rooms in a clean, orderly and sanitary condition to the extent the nature of the work allows.

[Statutory Authority: RCW 49.17.010, [49.17].040, and [49.17].050. 01-11-038, § 296-800-22005, filed 5/9/01, effective 9/1/01.]

WAC 296-800-22010 Sweep and clean your workplace to minimize dust. You must:

• Sweep and clean your workplace in a way that minimizes dust in the air as much as possible.

• When practical, clean after hours so that your employees are not exposed to dust in the air on the job.

[Statutory Authority: RCW 49.17.010, [49.17].040, and [49.17].050. 01-11-038, § 296-800-22010, filed 5/9/01, effective 9/1/01.]

WAC 296-800-22015 Keep your workplace free of obstacles that interfere with cleaning. You must:

• Keep your workplace clear of obstructions such as nails, splinters, loose boards and unnecessary holes and openings to make cleaning easier and more effective.

[Statutory Authority: RCW 49.17.010, [49.17].040, and [49.17].050. 01-11-038, § 296-800-22015, filed 5/9/01, effective 9/1/01.]

WAC 296-800-22020 Control pests in your workplace. You must:

• Make sure each building in your workplace is constructed, equipped and maintained so it restricts pests from entering or living in it. Pests include animals such as:

– Rodents (rats, mice, and squirrels)
– Birds (starlings, pigeons, and swallows)
– Insects (bees, wasps, and mosquitoes)

• Take steps to effectively control pests in your workplace, if they are detected.

– Carry out a continuing and effective control program in the areas of your workplace where pests have been detected.

Note: • By handling dead or live pests including their waste products, attached parasites and other contaminated materials, your employees may be exposed to certain health risks. These risks include, but are not limited to: Hanta virus, rabies, lyme disease and psittacosis. Contact your local L&I office (see resource section of this book) or the public health department for more information about health risks and proper pest handling and disposal techniques.
• "Workplace" includes storage areas.

[Statutory Authority: RCW 49.17.010, [49.17].040, and [49.17].050. 01-23-060, § 296-800-22020, filed 11/20/01, effective 12/1/01; 01-11-038, § 296-800-22020, filed 5/9/01, effective 9/1/01.]

WAC 296-800-22022 Make sure floors are maintained in a safe condition. You must:

• Make sure floors are kept free of debris. This includes:

– Buildings
– Platforms
– Walkways and driveways

– Storage yards
– Docks
• Use a nonslip coating on all polished floors.

[Statutory Authority: RCW 49.17.010, [49.17].040, and [49.17].050. 01-11-038, § 296-800-22022, filed 5/9/01, effective 9/1/01.]

DRAINAGE

WAC 296-800-22025 Keep your workroom floors dry, when practical. You must:

• Do the following to help keep your employees dry if wet processes are used in your work area:

– Maintain drainage away from the work area; and

– Provide false floors, platforms, or other dry places where employees can stand, where practical, or

– Provide appropriate waterproof footgear.

[Statutory Authority: RCW 49.17.010, [49.17].040, and [49.17].050. 01-11-038, § 296-800-22025, filed 5/9/01, effective 9/1/01.]

WAC 296-800-22030 Provide proper drainage. You must:

• Provide all areas where employees work, such as yards, basements, or garages, with adequate drainage.

[Statutory Authority: RCW 49.17.010, [49.17].040, and [49.17].050. 01-11-038, § 296-800-22030, filed 5/9/01, effective 9/1/01.]

STORAGE AREAS

WAC 296-800-22035 Store things safely. You must:

• Store materials so they do not create a hazard.

• Keep workplace storage areas free from accumulation of materials that could create hazards from tripping, fire, or explosion.

• Secure stored items such as bundles, containers, and bags to prevent them from falling, sliding, or collapsing by doing one or more of the following:

– Stacking
– Racking
– Blocking
– Interlocking
– Otherwise securing them

• Make sure stored items are limited in height so that they are stable and secure to prevent sliding or collapse.

Examples of Proper Material Storage

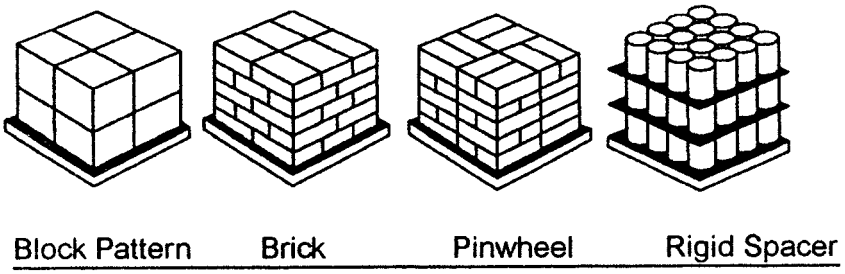

[Statutory Authority: RCW 49.17.010, [49.17].040, and [49.17].050. 01-11-038, § 296-800-22035, filed 5/9/01, effective 9/1/01.]

WAC 296-800-22040 Control vegetation in your storage areas. You must:

• Control vegetation in your storage areas when necessary to create a safe working environment.

[Statutory Authority: RCW 49.17.010, [49.17].040, and [49.17].050. 01-11-038, § 296-800-22040, filed 5/9/01, effective 9/1/01.]

SANITATION AND HYGIENE FACILITIES AND PROCEDURES

WAC 296-800-230 Summary.

Your responsibility:

To provide safe drinking (potable) water, bathrooms, washing facilities, eating areas and garbage and waste disposal in your workplace.

You must:

General requirements for all workplaces.

Drinking water

Provide safe drinking (potable) water in your workplace.

WAC 296-800-23005.

Clearly mark water outlets that are not fit for drinking (nonpotable).

WAC 296-800-23010.

Make sure systems delivering not fit for drinking (nonpotable) water prevent backflow into drinking water systems.

WAC 296-800-23015.

Bathrooms and washing facilities

Provide bathrooms for your employees.

WAC 296-800-23020.

Provide convenient, clean washing facilities.

WAC 296-800-23025.

Eating areas and food service

Make sure eating areas are safe and healthy.

WAC 296-800-23040.

Follow these requirements if you provide food service to your employees.

WAC 296-800-23045.

Garbage and waste disposal

Dispose of garbage and waste safely.

WAC 296-800-23050.

Remove garbage and waste in a way that does not create a health hazard.

WAC 296-800-23055.

Lunchrooms and personal service rooms

Provide a separate lunchroom if employees are exposed to toxic substances if they are allowed to eat and drink on the job site.

WAC 296-800-23060.

Provide showers when required for employees working with chemicals.

WAC 296-800-23065.

Provide change rooms when required.

WAC 296-800-23070.

Make sure any work clothes you provide are dry.

WAC 296-800-23075.

Note: Some industries may have additional rules on bathrooms and washing facilities. Some examples include:

Industry	WAC
Agriculture; indoor sanitation and temporary labor camps	chapter 296-307 WAC
Carcinogens; general regulated area requirements	WAC 296-62-07308
Charter boats	WAC 296-115-050
Compressed air work	WAC 296-36-160(5)
Construction	WAC 296-155-140
Temporary labor camps	WAC 296-24-12507

[Statutory Authority: RCW 49.17.010, 49.17.040, 49.17.050, and 49.17.060. 03-18-090, § 296-800-230, filed 9/2/03, effective 11/1/03. Statutory Authority: RCW 49.17.010, [49.17].040, and [49.17].050. 01-23-060, § 296-800-230, filed 11/20/01, effective 12/1/01; 01-11-038, § 296-800-230, filed 5/9/01, effective 9/1/01.]

DRINKING WATER

WAC 296-800-23005 Provide safe drinking (potable) water in your workplace.

You must:

(1) Provide safe drinking (potable) water for employees for:

- Washing themselves
- Personal service rooms
- Cooking
- Washing premises where food is prepared or processed
- Washing food, eating utensils, or clothing

(2) Make sure when providing movable or portable drinking water dispensers that they are:

- Capable of being closed
- Kept in sanitary condition
- Equipped with a tap

(3) Prohibit employees from:

- Using shared drinking cups or utensils.
- Using open containers such as barrels, pails, and tanks that require employees to dip or pour drinking water, even if the containers have covers.

Definition:

- Potable water is water that you can safely drink that meets specific safety standards prescribed by the United States Environmental Protection Agency's *National Interim Primary Drinking Water Regulations*, published in 40 CFR Part 141, and 40 CFR 147.2400.
- Personal service rooms are used for activities not directly connected with a business' production or service function such as first aid, medical services, dressing, showering, bathrooms, washing and eating.

[Statutory Authority: RCW 49.17.010, 49.17.040, 49.17.050, and 49.17.060. 03-18-090, § 296-800-23005, filed 9/2/03, effective 11/1/03. Statutory Authority: RCW 49.17.010, [49.17].040, and [49.17].050. 01-23-060, § 296-800-23005, filed 11/20/01, effective 12/1/01; 01-11-038, § 296-800-23005, filed 5/9/01, effective 9/1/01.]

WAC 296-800-23010 Clearly mark the water outlets that are not fit for drinking (nonpotable).

You must:

(1) Mark water outlets that are not fit for drinking (nonpotable), such as those used for industrial processes or fire fighting, so they will not be used for:

- Drinking
- Washing themselves, except in emergencies
- Cooking
- Washing food, eating utensils, or clothing.

(2) Prohibit the use of nonpotable water containing substances that could create unsafe conditions such as:

- Concentrations of chemicals, such as lead or chlorine
- Fecal coliform bacteria.

Note: As long as the nonpotable water is free of substances that could create unsafe conditions, the water can be used for cleaning both:

– Work premises used for activities other than food preparation or processing

AND

– Personal service rooms, such as bathrooms.

Reference: You may need to follow additional requirements for emergency washing facilities. See WAC 296-800-150 First aid, for more information.

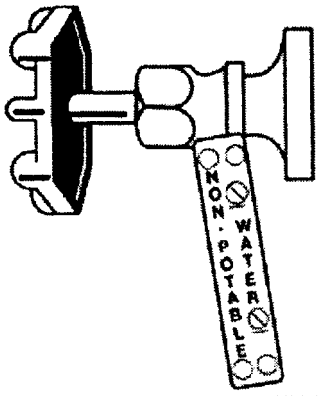

Outlets for water not fit to drink must be marked.

[Statutory Authority: RCW 49.17.010, 49.17.040, 49.17.050, and 49.17.060. 03-18-090, § 296-800-23010, filed 9/2/03, effective 11/1/03. Statutory Authority: RCW 49.17.010, [49.17].040, and [49.17].050. 02-16-047, § 296-800-23010, filed 8/1/02, effective 10/1/02; 01-23-060, § 296-800-23010, filed 11/20/01, effective 12/1/01; 01-11-038, § 296-800-23010, filed 5/9/01, effective 9/1/01.]

WAC 296-800-23015 Make sure that systems delivering not-fit-for-drinking (nonpotable) water prevent backflow into drinking water systems. You must:

- Make sure that systems delivering not-fit-for-drinking (nonpotable) water prevent backflow into drinking water systems.

[Statutory Authority: RCW 49.17.010, [49.17].040, and [49.17].050. 01-11-038, § 296-800-23015, filed 5/9/01, effective 9/1/01.]

BATHROOMS AND WASHING FACILITIES

WAC 296-800-23020 Provide bathrooms for your employees.

Exemption: You do not have to provide bathrooms:
For mobile crews or at work locations not normally attended by employees, if there is transportation immediately available to nearby bathrooms that meet the requirements of this section.

Exemption: You do not have to provide bathrooms:
For mobile crews or at work locations not normally attended by employees, if there is transportation immediately available to nearby bathrooms that meet the requirements of this section.

You must:

(1) Provide bathrooms with the appropriate number of toilets for your employees at every workplace based on Table 1.

• Have an appropriate number of toilets for each gender, based on the number of male and female employees at your workplace.

– For example, if you have thirty-seven men and seventeen women, you need to have three toilets for the men and two toilets for the women, based on Table 1.

• Make sure each toilet is in a separate compartment with a door and walls or partitions for privacy.

Table 1
Required Number of Employee Toilets at Every Workplace

Maximum Number of Employees Present at Any One Time During a Shift	Minimum Number of Toilets Required
1 to 15	1
16 to 35	2
36 to 55	3
56 to 80	4
81 to 110	5
111 to 150	6
Over 150	One additional toilet for each additional 40 employees

Note: A shared bathroom (multiple toilets without enclosures) counts as one toilet no matter how many toilets it contains. In bathrooms used only by men, urinals may be substituted for up to 1/3 of the required toilets.

You must:

(2) Provide toilet paper and a toilet paper roll holder for each toilet.

(3) Make sure bathrooms are maintained in a clean and sanitary condition.

(4) Make sure the sewage disposal method does not endanger the health of employees.

Exemption: Separate bathrooms for men and women are not required if the bathroom:
• Will only be occupied by one person at a time.
• Can be locked from the inside.
• Contains at least one toilet.

[Statutory Authority: RCW 49.17.010, 49.17.040, 49.17.050, and 49.17.060. 03-18-090, § 296-800-23020, filed 9/2/03, effective 11/1/03. Statutory Authority: RCW 49.17.010, [49.17].040, and [49.17].050. 02-16-047, § 296-800-23020, filed 8/1/02, effective 10/1/02; 01-11-038, § 296-800-23020, filed 5/9/01, effective 9/1/01.]

WAC 296-800-23025 Provide convenient and clean washing facilities.

Exemption: You do **not** have to provide washing facilities for:
• Mobile crews or work locations not normally attended by employees, if there is immediately available transportation to nearby washing facilities that meet the requirements of this rule.

You must:

• Provide convenient and clean washing facilities for employees including:

– Sinks or basins for personal washing

– Hot and cold water, or lukewarm (tepid), running water in each sink and basin

– Hand soap or similar cleaning agents

– One of the following:

• Individual paper or cloth hand towels

• Individual sections of clean continuous cloth toweling

• Warm air blowers for drying hands, located near the sinks and basins.

[Statutory Authority: RCW 49.17.010, 49.17.040, 49.17.050, and 49.17.060. 03-18-090, § 296-800-23025, filed 9/2/03, effective 11/1/03. Statutory Authority: RCW 49.17.010, [49.17].040, and [49.17].050. 01-23-060, § 296-800-23025, filed 11/20/01, effective 12/1/01; 01-11-038, § 296-800-23025, filed 5/9/01, effective 9/1/01.]

EATING AREAS AND FOOD SERVICE

WAC 296-800-23040 Make sure eating areas are safe and healthy.

You must:

(1) Make sure employees are not allowed to eat and drink in:

• Bathrooms.

• Areas exposed to toxic substances.

(2) Make sure food is not stored in bathrooms or areas exposed to toxic substances.

[Statutory Authority: RCW 49.17.010, 49.17.040, 49.17.050, and 49.17.060. 03-18-090, § 296-800-23040, filed 9/2/03, effective 11/1/03.]

WAC 296-800-23045 Follow these requirements if you provide food service to your employees.

You must:

• Make sure all food service facilities and operations you make available follow sound hygiene principles.

• Make sure the food is:

– Unspoiled.

– Protected from contamination during processing, preparation, handling, and storage.

[Statutory Authority: RCW 49.17.010, 49.17.040, 49.17.050, and 49.17.060. 03-18-090, § 296-800-23045, filed 9/2/03, effective 11/1/03.]

GARBAGE AND WASTE DISPOSAL

WAC 296-800-23050 Dispose of garbage and waste safely.

You must:

(1) Make sure garbage containers are:

• Kept in a clean and sanitary condition.

• Made from smooth, corrosion resistant materials.

• Easily cleaned or are disposable.

• Equipped with a solid tight-fitting cover unless you can keep them in a sanitary condition without a cover.

(2) Provide enough garbage containers to make sure they:

• Are conveniently located to encourage their use.

• Won't be overfilled.

[Statutory Authority: RCW 49.17.010, 49.17.040, 49.17.050, and 49.17.060. 03-18-090, § 296-800-23050, filed 9/2/03, effective 11/1/03.]

WAC 296-800-23055 Remove garbage and waste in a way that does not create a health hazard.

You must:

• Remove all sweepings, solid and liquid wastes, refuse, and garbage as often as needed to keep the workplace in a sanitary condition.

[Statutory Authority: RCW 49.17.010, 49.17.040, 49.17.050, and 49.17.060. 03-18-090, § 296-800-23055, filed 9/2/03, effective 11/1/03.]

LUNCHROOMS AND PERSONAL SERVICE ROOMS

WAC 296-800-23060 Provide a separate lunchroom if employees are exposed to toxic substances if they are allowed to eat and drink on the job site.

You must:

(1) Provide a lunchroom separate from the work area if employees are exposed to toxic substances.

(2) Use Table 2 to determine the required square footage in your lunchroom based on the number of employees using the room at any one time.

Table 2
Maximum Number of Employees Using Lunchroom at One Time

Number of Persons	Square Feet per Person
25 and less	13
26-74	12
75-149	11
150 and over	10

Note: You do not have to provide a separate lunchroom if it is convenient for employees to leave the workplace to eat and drink.

[Statutory Authority: RCW 49.17.010, 49.17.040, 49.17.050, and 49.17.060. 03-18-090, § 296-800-23060, filed 9/2/03, effective 11/1/03.]

WAC 296-800-23065 Provide showers when required for employees working with chemicals.

You must:

• Provide showers for employees if:

– They work with chemicals that could cause an occupational illness;

AND

– The chemicals remain on the skin between work shifts.

• Make sure employees who work with such chemicals shower at the end of their shifts.

– Make sure showers have:

• Soap or other cleansing agents.

• Hot and cold water with a common discharge line.

– Provide individual, clean towels for each employee who is required to shower.

• Provide at least one shower for every ten employees (or every fraction of 10) of each gender.

Note: Table 3 shows the number of showers to provide based on a "fraction of 10."

Table 3

Number of Employees of Each Gender	Number of Showers
1-10	1
11-20	2
21-30	3
31-40	4
41-50	5

[Statutory Authority: RCW 49.17.010, 49.17.040, 49.17.050, and 49.17.060. 03-18-090, § 296-800-23065, filed 9/2/03, effective 11/1/03.]

WAC 296-800-23070 Provide change rooms when required.

You must:

• Provide change rooms when employees are required by a particular standard to wear protective clothing because of the possibility of contamination with toxic materials.

• Make sure change rooms have separate storage facilities for street clothes and protective clothing.

[Statutory Authority: RCW 49.17.010, 49.17.040, 49.17.050, and 49.17.060. 03-18-090, § 296-800-23070, filed 9/2/03, effective 11/1/03.]

WAC 296-800-23075 Make sure any work clothes you provide are dry.

You must:

• Make sure when providing work clothes to employees that the clothing provided is dry if the clothing:

– Gets wet during use;

OR

– Is washed before it is reused.

[Statutory Authority: RCW 49.17.010, 49.17.040, 49.17.050, and 49.17.060. 03-18-090, § 296-800-23075, filed 9/2/03, effective 11/1/03.]

ENVIRONMENTAL TOBACCO SMOKE IN THE OFFICE

WAC 296-800-240 Summary. Your responsibility: To control exposure to *environmental tobacco smoke* in your *office work environment*.

You must:

Control tobacco smoke in your building *WAC 296-800-24005*.

Control tobacco smoke that comes in from the outside *WAC 296-800-24010*.

Note: This rule does not preempt any federal, state, municipal, or other local authority's regulation of indoor smoking that is more protective than this section.

Definition: Office work environment is an indoor or enclosed occupied space where clerical work, administration, or business is carried out. In addition, it includes:

- Other workplace spaces controlled by the employer and used by office workers, such as cafeterias, meeting rooms, and washrooms.
- Office areas of manufacturing and production facilities, not including process areas.
- Office areas of businesses such as food and beverage establishments, agricultural operations, construction, commercial trade, services, etc.

[Statutory Authority: RCW 49.17.010, [49.17].040, and [49.17].050. 01-11-038, § 296-800-240, filed 5/9/01, effective 9/1/01.]

WAC 296-800-24005 Control tobacco smoke in your building. Exemption: The minimum criteria specified in this

rule do not apply to outdoor structures provided for smokers such as gazebos or lean-tos.

You must:

• Prohibit *smoking* in your office work environment or

• Restrict *smoking* inside your office work environment to designated enclosed smoking rooms that meet the following minimum criteria:

– Identify *smoking* rooms clearly with signs.

– Make sure the designated *smoking* rooms are not in common areas, such as:

❖ Places where nonsmoking employees are required to work or visit

❖ Restrooms

❖ Washrooms

❖ Hallways

❖ Stairways

❖ Cafeterias/lunchrooms

❖ Meeting rooms

– Make sure that no employee is required to enter a designated *smoking* room while someone is smoking there.

– Conduct cleaning and maintenance work in designated *smoking* rooms when smokers are not present.

You must:

• Ventilate designated smoking rooms at a rate of at least 60 cubic feet per minute per smoker (calculated on the basis of the maximum number of smokers expected during the course of a normal working day), which can be supplied by transfer air from adjacent areas.

– Maintain enough negative air pressure in designated *smoking* areas to prevent smoke from migrating into nonsmoking areas, at all times.

– Operate a separate mechanical exhaust system in designated *smoking* rooms, to make sure exhausted air moves directly outside, and does not recirculate into nonsmoking areas.

– Prohibit use of the designated *smoking* room if the mechanical exhaust system is not working properly, until repairs are completed.

Note: This ventilation rate is recommended for occupancies of no more than seven people for every 100 square feet of net occupied space in the designated smoking room.

[Statutory Authority: RCW 49.17.010, [49.17].040, and [49.17].050. 01-11-038, § 296-800-24005, filed 5/9/01, effective 9/1/01.]

WAC 296-800-24010 Control tobacco smoke that comes in from the outside.

You must:

• Use *engineering or administrative controls* to minimize the amount of tobacco smoke that comes into your office(s) from outside the building.

– Make sure that outside smoking areas used by your employees are not close to doorways, air intakes, and other openings that may allow airflow directly into an office.

Note:
- Administrative controls change the way workers do their job, reducing work exposure to potential hazards. This includes such things as:
  - Job rotation
  - Wetting down dusty areas
  - Having employees shower after exposure to potentially harmful substances
  - Maintaining equipment properly
  - Cleaning up work areas to control the effect of potential hazards
- Engineering controls let you plan or physically change the machinery or work environment to prevent employee exposure to potential hazards. This includes any modification of plant equipment, processes, or materials to reduce employees' exposure to toxic materials or harmful physical agents.

[Statutory Authority: RCW 49.17.010, [49.17].040, and [49.17].050. 01-23-060, § 296-800-24010, filed 11/20/01, effective 12/1/01; 01-11-038, § 296-800-24010, filed 5/9/01, effective 9/1/01.]

STAIRS AND STAIR RAILINGS SUMMARY

WAC 296-800-250 Summary. Your responsibility: To make sure stairs used by employees are safe

You must:

Provide fixed stairs where required

WAC 296-800-25005

Provide stairs that minimize hazards

WAC 296-800-25010

Provide handrails and stair railings

WAC 296-800-25015.

Exemptions: This rule does **not** apply to:

❖ Stairs used exclusively for fire exit purposes

❖ Construction operations (See WAC 296-24-76503 for the specifications for the safe design and construction of fixed general industrial stairs.)

❖ Private buildings or residences

❖ Articulated stairs (for example, stairs used at a marina)

❖ Nonindustrial and monumental stairs are excluded as they are not industrial stairs; however, when public and private building steps are located at loading or receiving docks, in maintenance areas, etc., or are used exclusively by employees, the requirements of this rule must apply.

Note: The introduction has important information about building, electrical and fire codes that may apply to you in addition to WISHA rules. See "How do the WISHA rules relate to building, fire, and electrical codes" in the introduction section of this book.

[Statutory Authority: RCW 49.17.010, [49.17].040, and [49.17].050. 01-23-060, § 296-800-250, filed 11/20/01, effective 12/1/01; 01-11-038, § 296-800-250, filed 5/9/01, effective 9/1/01.]

WAC 296-800-25005 Provide fixed stairs where required. You must:

• Install fixed stairs where:

– Employees travel between different levels on a predictable and regular basis.

– Access to platforms is required to give routine attention to equipment under operation.

– Daily movement between elevations is required to gauge, inspect, and maintain equipment where those work assignments may expose employees to acids, caustics, gases, or other harmful substances.

– Carrying tools or equipment by hand is a normal work requirement.

• Not use spiral stairways except as secondary exit routes.

Note:
- You can use fixed ladders for climbing elevated structures, such as tanks, towers, and overhead traveling cranes, when their use is common practice in your industry.
- You can use winding stairways on tanks and similar round structures if the structure's diameter is at least five feet.

- You could use a spiral stairway as an exit route in a restricted area that lacks room for a conventional stairway.

Definitions:
- A stairway or fixed stairs is a series of steps and landings:
  - Leading from one level or floor to another.
  - Leading to platforms, pits, boiler rooms, crossovers, or around machinery, tanks, and other equipment.
  - Used more or less continuously or routinely by employees or only occasionally by specific individuals.
  - With three or more risers.
- A riser is the vertical part of the step at the back of a tread that rises to the front of the tread above.
- A tread is the horizontal part of the step. Tread width is the distance from the front of the tread to the back.

Stair Components

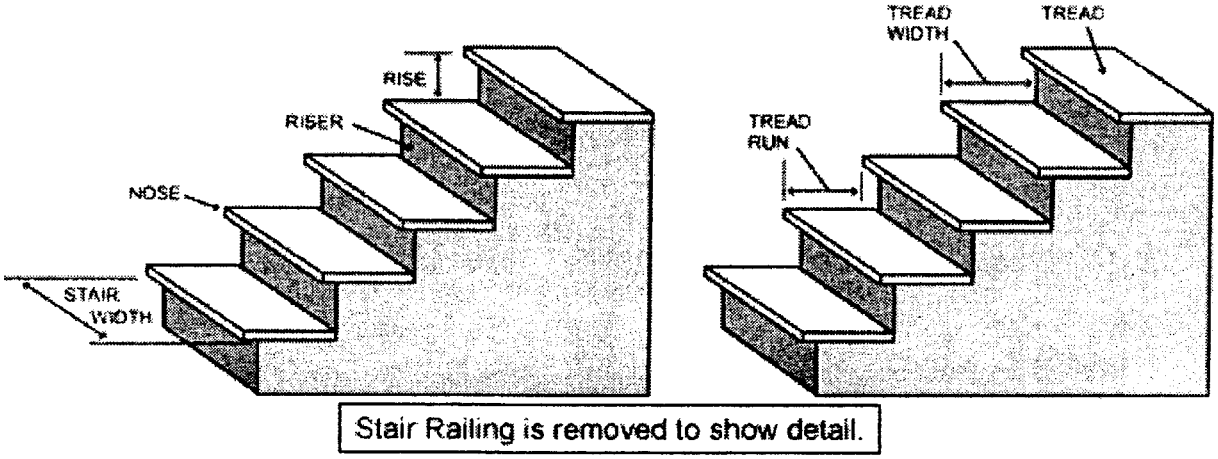

[Statutory Authority: RCW 49.17.010, [49.17].040, and [49.17].050. 01-23-060, § 296-800-25005, filed 11/20/01, effective 12/1/01; 01-11-038, § 296-800-25005, filed 5/9/01, effective 9/1/01.]

WAC 296-800-25010 Provide stairs that minimize hazards. You must:

(1) Make sure stairs have slip-resistant treads.

(2) Make sure that stairs with four or more risers have:

• Railings on the open sides of all exposed stairways and stair platforms

• Handrails on at least one side of closed stairways, preferably on the right side while descending

(3) Provide a platform where doors or gates open directly on a stairway. The swing of the door must not reduce the effective width of the platform to less than 20 inches.

Note: To see all of the rules for building fixed stairs, refer to WAC 296-24-75011 and 296-24-765 of the General safety and health standard.

[Statutory Authority: RCW 49.17.010, [49.17].040, and [49.17].050. 01-11-038, § 296-800-25010, filed 5/9/01, effective 9/1/01.]

WAC 296-800-25015 Provide handrails and stair railings.

Exemption: Vehicle service pit stairways are exempt from the rules for stairway railing and guards, if they would prevent a vehicle from moving into a position over the pit.

Definition:
- A handrail is a single bar or pipe on brackets from a wall or partition to provide a continuous handhold for persons using a stair.
- A stair railing is a vertical barrier attached to a stairway with an open side, to prevent falls. The top surface of the stair railing is used as a handrail.

You must:

• Make sure stairways less than forty-four inches wide have:

– At least one handrail, preferably on your right side as you go down the stairs, if both sides are enclosed.

OR

– At least one stair railing on the open side, if one side is open.

OR

– One stair railing on each side, if both sides are open.

• Make sure stairways more than forty-four inches wide but less than eighty-eight inches wide have:

– One handrail on each enclosed side.

– One stair railing on each open side.

• Make sure stairways at least eighty-eight inches wide have:

– One handrail on each enclosed side.

– One stair railing on each open side.

– One intermediate stair railing located approximately midway of the width.

• Equip winding stairs with a handrail, offset to prevent walking on all portions of the treads, less than six inches wide.

Reference: Railings must consist of a top rail, intermediate rail, and posts. To see all of the rules for building handrails and stairway railings, refer to WAC 296-24-75011, of the general safety and health standard.

[Statutory Authority: RCW 49.17.010, [49.17].040, and [49.17].050. 02-16-047, § 296-800-25015, filed 8/1/02, effective 10/1/02; 01-23-060, § 296-800-25015, filed 11/20/01, effective 12/1/01; 01-11-038, § 296-800-25015, filed 5/9/01, effective 9/1/01.]

FLOOR OPENINGS, FLOOR HOLES AND OPEN-SIDED FLOORS

WAC 296-800-260 Summary. Your responsibility: To safely guard floor openings, floor holes, and open-sided floors in your workplace.

You must:

Guard or cover floor openings and floor holes.

WAC 296-800-26005.

Protect open-sided floors and platforms.

WAC 296-800-26010.

[Statutory Authority: RCW 49.17.010, [49.17].040, and [49.17].050. 01-11-038, § 296-800-260, filed 5/9/01, effective 9/1/01.]

WAC 296-800-26005 Guard or cover floor openings and floor holes.

Definition: A **floor opening** is an opening in any floor, platform, pavement, or yard that measures at least twelve inches in its smallest dimension and through which a person can fall.

Examples of floor openings are:
- Hatchways
- Stair or ladder openings
- Pits
- Large manholes.

The following are **not** considered **floor openings:**
- Openings occupied by elevators
- Dumbwaiters
- Conveyors
- Machinery
- Containers

A **floor hole** is an opening in any floor, platform, pavement, or yard that measures at least one inch but less than twelve inches at its smallest dimension and through which materials and tools (but not people) can fall.

Examples of floor holes are:
- Belt holes
- Pipe openings
- Slot openings

You must:

(1) Guard stairway floor openings, temporary floor openings and floor holes.

• Protect all stairway floor openings with a railing. The railing must protect all open sides except the stairway entrance side.

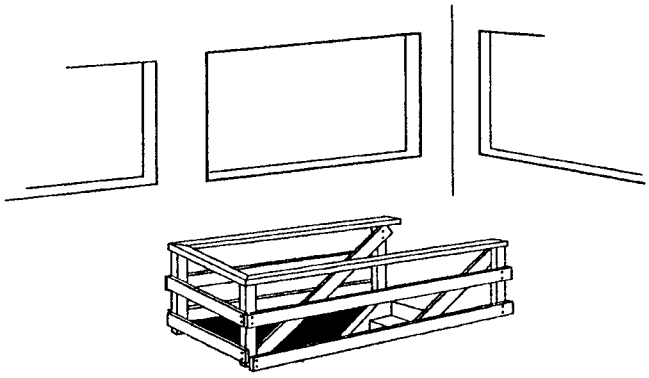

Guardrail installed around all sides of stairway opening except at the entrance.

• Use a hinged cover and a removable railing where traffic across an infrequently used stairway floor opening prevents the installation of a fixed railing. This removable railing must protect all open sides except the stairway entrance side.

• Protect temporary floor openings by either a railing or by a person who constantly attends the opening.

• Protect exposed floor holes into which a person can accidentally walk by either:

– A railing with a toeboard on all open sides or

– A floor hole cover of standard strength and construction that can be hinged in place. When a floor hole cover is not in place, the hole must be protected by a removable railing or constantly attended by someone.

• Provide covers for floor openings. Floor opening covers may be of any material that has a safety factor of four, or is strong enough to hold up to four times the intended load. Covers that do not project more than one inch above the floor level may be used providing all edges are beveled (slanted) to prevent tripping. All hinges, handles, bolts, or other parts of a cover must set flush with the floor or cover surface.

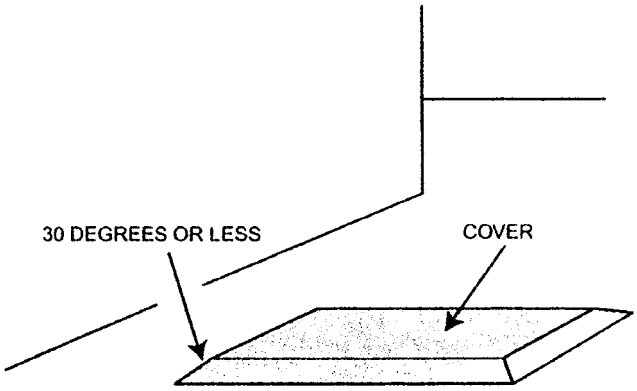

A cover that projects above the surface must be beveled to reduce the tripping hazard.

(2) Prevent tools and materials from falling through a floor hole. The floor hole must be protected by a cover that leaves an opening no more than one inch wide and is securely held in place. This applies only to floor holes that persons cannot accidentally walk into on account of fixed machinery, equipment, or walls.

[Statutory Authority: RCW 49.17.010, [49.17].040, and [49.17].050. 01-11-038, § 296-800-26005, filed 5/9/01, effective 9/1/01.]

WAC 296-800-26010 Protect open-sided floors and platforms.

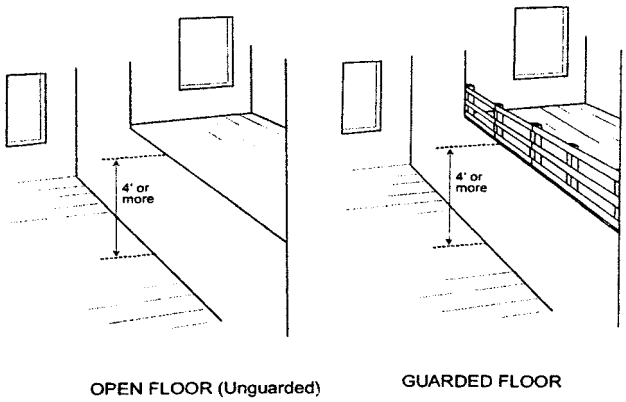

You must:

(1) Guard open-sided floors and platforms.

• Guard open-sided floors and platforms four feet or more above adjacent floor or ground level by a railing. The entrance to a ramp, stairway, or fixed ladder does not need a railing.

• Guard open-sided floors, walkways and platforms above or adjacent to dangerous equipment, pickling or galvanizing tanks, degreasing units, and other similar hazards, regardless of height with a railing and toeboard.

(2) Make sure tools and loose materials are not left on overhead platforms and scaffolds.

Note: • Where the guarding rules above do not apply because employees exposure to falls is infrequent (not on a predictable and regular basis), you must comply with the Personal Protective Equipment (PPE) rules (WAC 296-800-160) or other effective fall protection must be provided.
• You can find the minimum requirements for standard railings of various types of construction in WAC 296-24-75011.

[Statutory Authority: RCW 49.17.010, [49.17].040, and [49.17].050. 01-23-060, § 296-800-26010, filed 11/20/01, effective 12/1/01; 01-11-038, § 296-800-26010, filed 5/9/01, effective 9/1/01.]

WORKPLACE STRUCTURAL INTEGRITY

WAC 296-800-270 Summary. Your responsibility: To make sure that the buildings, floors, and other structures in your workplace are safe, well-built, and not overloaded

You must:

Not overload floors or roofs

WAC 296-800-27005.

Make sure that floors are safe

WAC 296-800-27010.

Make sure floors can support equipment that moves or has motion

WAC 296-800-27015.

Post approved load limits (weight limits) for floors

WAC 296-800-27020.

Note: The introduction has important information about fire, building and electrical codes that may apply to you in addition to WISHA rules. See "How do the WISHA rules relate to fire, building and electrical codes" in the introduction section of this book.

[Statutory Authority: RCW 49.17.010, [49.17].040, and [49.17].050. 01-11-038, § 296-800-270, filed 5/9/01, effective 9/1/01.]

WAC 296-800-27005 Do not overload floors or roofs. You must:

• Prohibit overloading roofs and floors of any building or other structure with more weight than is approved by the building official.

[Statutory Authority: RCW 49.17.010, [49.17].040, and [49.17].050. 01-11-038, § 296-800-27005, filed 5/9/01, effective 9/1/01.]

WAC 296-800-27010 Make sure that floors are safe. You must:

• Make sure that floors including their parts and structural members are safe.

• Make sure floors are of substantial construction and kept in good repair. This includes floors of:

– Buildings
– Platforms
– Walks and driveways
– Storage yards
– Docks

• Make sure that structures are designed, constructed, and maintained to provide a safety factor of 4 times the imposed maximum strain.

– If you notice bowing, cracking, or other indications of excessive strain on a structure, you must take action to make sure it is safe.

Note: This rule applies to all buildings or those that have had complete or major changes or repairs built after 5/7/74.

[Statutory Authority: RCW 49.17.010, [49.17].040, and [49.17].050. 01-11-038, § 296-800-27010, filed 5/9/01, effective 9/1/01.]

WAC 296-800-27015 Make sure floors can support equipment that moves or has motion. You must:

• Make sure flooring of buildings, ramps, docks, trestles and other fixed structures that supports equipment that moves or has motion such as vibration, must not be less than two and one-half inch material.

Note: Where flooring is covered by steel floor plates, 2-inch material may be used.

[Statutory Authority: RCW 49.17.010, [49.17].040, and [49.17].050. 01-11-038, § 296-800-27015, filed 5/9/01, effective 9/1/01.]

WAC 296-800-27020 Post approved load limits (weight limits) for floors. You must:

• Post approved load limits (weight limits) for floors used for mercantile, business, industrial or storage purposes in an obvious place.

• As the owner, or owner's agent, of a building (or other part of a workplace) post the load approved by the building official by:

– Supplying and affixing a durable metal sign that is marked with the approved load.

– Placing the metal sign in an obvious spot in the space to which it applies.

– Replacing the metal sign if it is lost, defaced, damaged, or removed.

Note: This rule applies to the floor that supports shelving, but not to the shelves themselves.

[Statutory Authority: RCW 49.17.010, [49.17].040, and [49.17].050. 01-23-060, § 296-800-27020, filed 11/20/01, effective 12/1/01; 01-11-038, § 296-800-27020, filed 5/9/01, effective 9/1/01.]

BASIC ELECTRICAL RULES

WAC 296-800-280 Basic electrical rules. Summary. Your responsibility: To protect your employees from hazards when working with electrical equipment, tools, and appliances.

You must:

Inspect all electrical equipment your employees use to make sure the equipment is safe.

WAC 296-800-28005.

Make sure all electrical equipment is used for its approved or listed purpose.

WAC 296-800-28010.

Make sure electrical equipment used or located in wet or damp locations is designed for such use.

WAC 296-800-28015.

Make sure electrical equipment that is not marked by the manufacturer cannot be used.

WAC 296-800-28020.

Identify disconnecting means.

WAC 296-800-28022.

Maintain electrical fittings, boxes, cabinets, and outlets in good condition.

WAC 296-800-28025.

Maintain all flexible cords and cables in good condition and use safely.

WAC 296-800-28030.

Guard electrical equipment to prevent your employees from electrical hazards.

WAC 296-800-28035.

Make sure electrical equipment is effectively grounded.

WAC 296-800-28040.

Make sure electrical equipment has overcurrent protection.

WAC 296-800-28045.

Exemptions:

- These rules apply to all electrical equipment used in the workplace, except for:
  - Electrical installations and equipment on ships, aircraft and all automotive vehicles other than mobile homes and recreational vehicles.
  - Electrical installations and equipment used to generate, transmit, transform or distribute power exclusively for operation of rolling stock.
  - Electrical installations used exclusively for signaling and communicating with rolling stock.
  - Installations underground in mines.
  - Installations of communication equipment located outdoors or inside buildings used and controlled exclusively by communication utilities.
  - Installations controlled and used exclusively by electric utilities for communication or metering, or

  For generating, controlling, transforming, transmitting and distributing electric energy in buildings used exclusively by the company located:
  - ✦ Outdoors on property owned or leased by the utility; or
  - ✦ On public highways, streets and roads; or
  - ✦ Outdoors by established rights on private property.

Note:

- The introduction has important information about fire, building and electrical codes that may apply to you in addition to WISHA rules. See "How do the WISHA rules relate to fire, building and electrical codes" in the introduction section of this book.
- These rules guide how electrical equipment is used and maintained in your workplace. They should not be used in place of your local electrical codes if you are installing electrical wiring, electrical circuits or electrical distribution equipment.
- This rule applies to 600 volts or less. Requirements for specific equipment or special installation are found in chapter 296-24 WAC, Part L.

[Statutory Authority: RCW 49.17.010, [49.17].040, and [49.17].050. 01-23-060, § 296-800-280, filed 11/20/01, effective 12/1/01; 01-11-038, § 296-800-280, filed 5/9/01, effective 9/1/01.]

WAC 296-800-28005 Inspect all electrical equipment your employees use to make sure the equipment is safe. You must:

• Inspect electrical equipment to make sure there are no recognized hazards likely to cause your employees' death or serious physical harm. Determine the safety of the equipment by using the following list:

– Has been approved or listed by a recognized testing laboratory, such as Underwriters Laboratories (UL) or other approving agency.

– Is approved, or listed as approved, for the purpose it is being used.

– Has strong and durable guards providing adequate protection including parts designed to enclose and protect other equipment.

– Is insulated.

– Will not overheat under conditions of use.

– Will not produce arcs during normal use.

– Is classified by:

✦ Type

✦ Size

✦ Voltage

✦ Current capacity

✦ Specific use

✦ Other factors

[Statutory Authority: RCW 49.17.010, [49.17].040, and [49.17].050. 01-23-060, § 296-800-28005, filed 11/20/01, effective 12/1/01; 01-11-038, § 296-800-28005, filed 5/9/01, effective 9/1/01.]

WAC 296-800-28010 Make sure all electrical equipment is used for its approved or listed purpose.

Definitions:

- Electrical outlets are places on an electric circuit where power is supplied to equipment through receptacles, sockets and outlets for attachment plugs.
- Receptacles are outlets that accept a plug to supply electric power to equipment through a cord or cable.

You must:

• Make sure electrical outlets are rated equal or greater to the electrical load supplied.

• Make sure the proper mating configuration exists when connecting the attachment plug to a receptacle.

• Make sure when electrical outlets, cord connectors, and receptacles are joined, they accept the attachment plug with the same voltage or current rating.

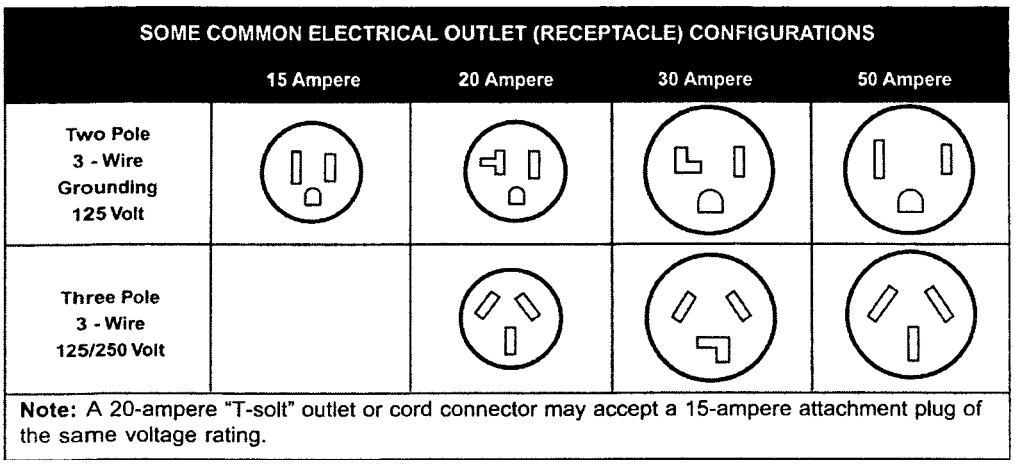

[Statutory Authority: RCW 49.17.010, [49.17].040, and [49.17].050. 01-23-060, § 296-800-28010, filed 11/20/01, effective 12/1/01; 01-11-038, § 296-800-28010, filed 5/9/01, effective 9/1/01.]

WAC 296-800-28015 Make sure electrical equipment used or located in wet or damp locations is designed for such use. You must:

• Make sure fixtures and receptacles located in wet or damp locations are approved for such use. They must be constructed or installed so that water cannot enter or accumulate in wireways, lampholders, or other electrical parts.

• Make sure cabinets, fittings, boxes, and other enclosures in wet or damp locations are installed to prevent moisture or water from entering and accumulating inside.

– In wet locations these enclosures must be weatherproof.

– Switches, circuit breakers, and switchboards located in wet locations must be in weatherproof enclosures.

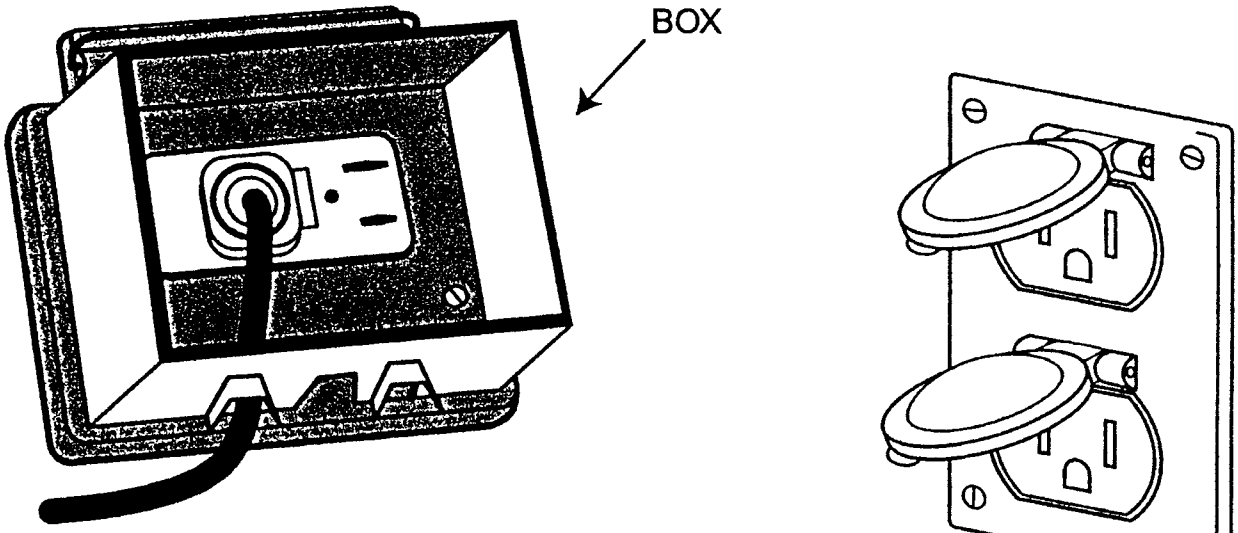

Electrical equipment used in wet locations must be weatherproof.

[Statutory Authority: RCW 49.17.010, [49.17].040, and [49.17].050. 01-11-038, § 296-800-28015, filed 5/9/01, effective 9/1/01.]

WAC 296-800-28020 Make sure electrical equipment that is not marked is not used. You must:

• Make sure markings are durable and appropriate to the environment.

• Appropriate markings include:

– The manufacturer's name;

or

– Trademark;

or

– The organization responsible for the product;

and

– Voltage, current and wattage or other ratings as necessary.

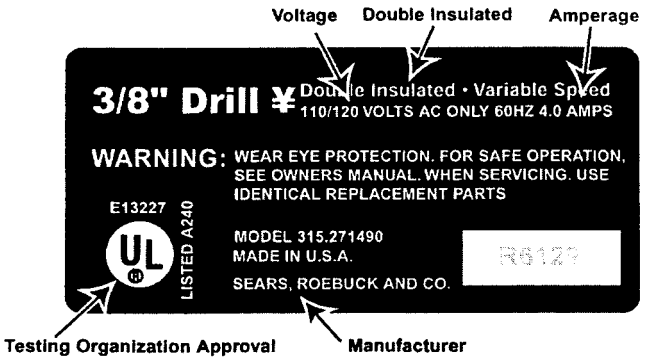

Electrical tools and equipment marked to show manufacturer, approvals and power requirements.

[Statutory Authority: RCW 49.17.010, [49.17].040, and [49.17].050. 01-23-060, § 296-800-28020, filed 11/20/01, effective 12/1/01; 01-11-038, § 296-800-28020, filed 5/9/01, effective 9/1/01.]

WAC 296-800-28022 Identify disconnecting means. You must:

• Make sure the disconnect means (such as on/off switches and circuit breakers) is marked to show when it is open and closed and what equipment it controls, unless located and arranged so the purpose is obvious.

• Make sure each service, feeder and branch circuit is marked, at its disconnecting means or overcurrent device, to show when the circuit is open and closed and what circuit it controls, unless located and arranged so the purpose is obvious.

• Make sure markings are durable and appropriate to the environment.

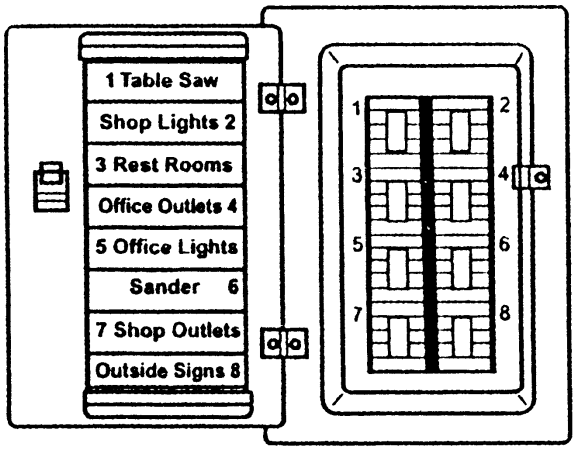

Electrical panel circuit breakers labeled to show the equipment or circuits they control.

[Statutory Authority: RCW 49.17.010, [49.17].040, and [49.17].050. 01-11-038, § 296-800-28022, filed 5/9/01, effective 9/1/01.]

WAC 296-800-28025 Maintain electrical fittings, boxes, cabinets and outlets in good condition. You must:

(1) Do the following to covers and openings:

• Do the following when conductors enter boxes, cabinets, or fittings:

– Protect the conductor (wires) from abrasion.

– Effectively close the openings where conductors enter.

– Effectively close all unused openings.

• Provide pull boxes, junction boxes, and fittings with covers approved for the purpose.

• Make sure each outlet box has a cover, faceplate, or fixture canopy in completed installations.

• Make sure covers for outlet boxes with openings for flexible cord pendants have bushings to protect the cord, or have a smooth and well rounded surface where the cord touches the opening.

• Ground metal covers.

(2) Make sure the area in front of electrical panels, circuit breaker boxes and similar equipment which operates at 600 volts or less:

• Has sufficient working area at least thirty inches wide for operation and maintenance of the equipment.

• Is kept clear and free of stored materials so that employees can access this equipment for servicing, adjustments or maintenance.

• Has at least one access route to provide free and unobstructed access.

• Has at least three feet of working space in front, measured from the exposed live parts or the enclosure front. (See the work clearance table on the following page.)

• Has adequate indoor lighting.

(*WAC 296-800-210.*)

• Has at least six feet three inches of headroom.

This table shows the area you must keep clear depending on the layout of the electrical equipment.

Conditions*	0 - 150 volts to ground	151 - 600 volts to ground
a	3 ft.	3 ft.
b	3 ft.	3 1/2 ft.
c	3 ft.	4 ft.

Minimum clear distances may be 2 feet 6 inches for equipment built or installed before 3/20/82.

• Conditions a, b, and c are as follows:

–a = Exposed live parts on one side and no live or grounded parts on the other side of the working space, or exposed live parts on both sides effectively guarded by suitable wood or other insulating material. Insulated wire or insulated bus bars operating at not over 300 volts are not considered live parts.

–b = Exposed live parts on one side and grounded parts on the other side.

–c = Exposed live parts on both sides of the workspace (not guarded as provided in condition (a) with the operator between the panels).

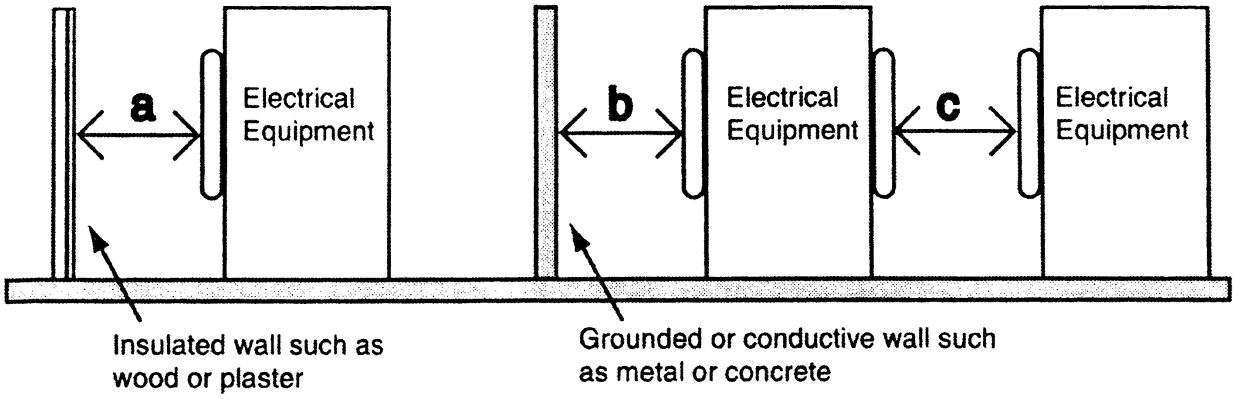

Distances are measured from live parts if they are exposed or from the enclosure front if live parts are enclosed.

[Statutory Authority: RCW 49.17.010, [49.17].040, and [49.17].050. 01-23-060, § 296-800-28025, filed 11/20/01, effective 12/1/01; 01-11-038, § 296-800-28025, filed 5/9/01, effective 9/1/01.]

WAC 296-800-28030 Maintain all flexible cords and cables in good condition and use safely.

Exemption: These rules do not apply to cords and cables that are an internal part of factory assembled appliances and equipment, like the windings on motors or wiring inside electrical panels.

Note: Flexible cords and cables are typically used to connect electrical equipment to a power source. These cords can have an electrical plug to connect to a power source or can be permanently wired into the power source. The terms flexible cords, extension cord, cables and electrical cords all refer to a type of flexible cord.

You must:

(1) Perform visual inspections.

• On portable cord- and plug-connected equipment and extension cords before use on each work shift. Defects and damage to look for include:

– Loose parts.

– Deformed or missing pins.

– External defects and damage.

– Damage to the outer covering or insulation.

– Pinched or crushed covering or insulation that might indicate internal damage.

Exemption: You do not need to visually inspect portable cord- and plug-connected equipment and extension cords that stay connected once in place and are not exposed to damage until they are moved.

You must:

• Remove from service any defective or damaged cord until repaired and tested.

• Make sure flexible cords and cables are used as described.

(2) Use.

• Use flexible cords only as follows:

– Wiring of equipment and appliances.

– Data processing cables approved as a part of the data processing system.

– Pendants.

– Wiring for fixtures.

– Connecting portable lamps or appliances to an approved outlet with an attachment plug.

– Connecting stationary equipment that is frequently changed with an attachment plug energized from an approved outlet.

– Preventing noise or vibration transmission.

– Appliances that have been designed to permit removal for maintenance and repair if the appliance is equipped with an attachment plug energized from an approved outlet.

– Elevator cables.

– Wiring of cranes and hoists.

Common Acceptable Uses of Flexible Cords

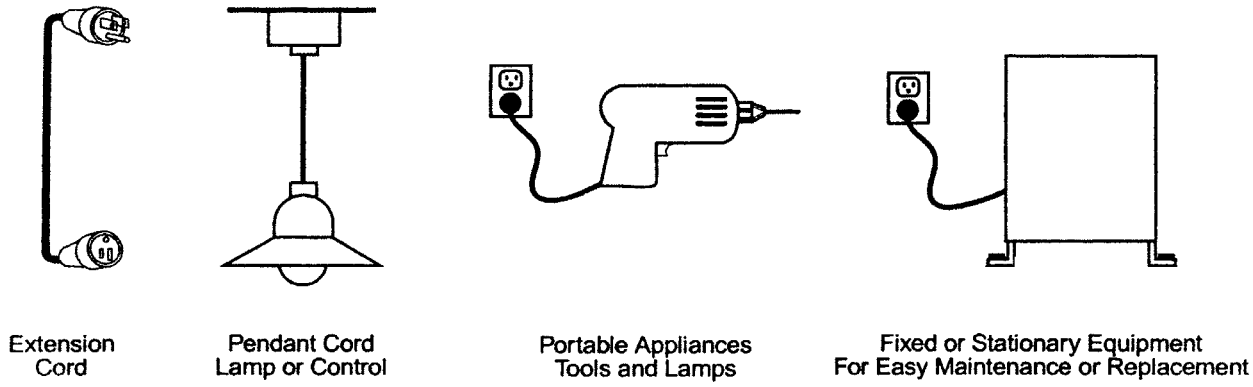

Note: Extension cords (flexible cord sets) may be used on a temporary basis if you follow the rules described in the temporary use section, WAC 296-800-28030(3).

You must:

• Not use flexible cords in the following ways:

– As a substitute for fixed wiring of a structure.

– To run through holes in walls, ceilings, or floors.

– To run through doorways, windows, or similar openings.

– To attach to building surfaces.

– To conceal behind building walls, ceilings, or floors.

– To raise or lower equipment.

• Make sure flexible cords and cables are approved and suitable for:

– The way they will be used.

– The location where they will be used.

• Not fasten or hang cords and equipment in any way that could cause damage to the outer jacket or insulation of the cord.

• Make sure insulation on flexible cords and cables is intact.

• Make sure flexible cords and electrical cords are:

– Connected to devices and fittings so that any pulling force on the cord is prevented from being directly transmitted to joints or terminal screws on the plug.

– Used only in continuous lengths without splice or tap.

• Prohibit your employees from using wet hands to plug or unplug equipment or extension cords if the equipment is energized.

Note: Hard service flexible cords No. 12 or larger may be repaired or spliced if the insulation, outer sheath properties, and use characteristics of the cord are retained.

You must:

(3) Provide the following for temporary use.

• Make sure temporary electrical power and lighting installations that operate at 600 volts or less are used only:

– During and for remodeling, maintenance, repair or demolition of buildings and similar activities.

– Experimental or developmental work.

– For no more than ninety days for:

❖ Christmas decorative lighting.

❖ Carnivals.

❖ Other similar purposes.

• Make sure flexible cords and electrical cords used on a temporary basis are protected from accidental damage:

– By avoiding sharp corners and projections

– If they pass through doorways or other pinchpoints.

[Statutory Authority: RCW 49.17.010, [49.17].040, and [49.17].050. 01-23-060, § 296-800-28030, filed 11/20/01, effective 12/1/01; 01-11-038, § 296-800-28030, filed 5/9/01, effective 9/1/01.]

WAC 296-800-28035 Guard electrical equipment to prevent your employees from electrical hazards. You must:

(1) Guard live parts of electric equipment operating at 50 volts or more against accidental contact by any of the following means:

• By approved cabinets or other forms of approved enclosures.

• By location in a room, vault, or similar enclosure that is accessible only to employees qualified to work on the equipment. Entrances to rooms and other guarded locations containing exposed live parts must be marked with conspicuous warning signs forbidding unqualified persons to enter.

• By permanent, substantial partitions or screens so that only employees qualified to work on the equipment will have access within reach of the live parts. Any openings must prevent accidental contact with live parts by employees or objects employees carry.

• By location on a balcony, gallery, or platform that will exclude unqualified persons.

• By being located eight feet or more above the floor or other working surface.

(2) Make sure all electrical appliances, fixtures, lampholders, lamps, rosettes, and receptacles do not have live parts normally exposed to employee contact.

– Rosettes and cleat type lampholders at least 8 feet above the ground may have exposed parts.

(3) In locations where electric equipment would be exposed to physical damage, enclosures or guards must be so arranged and of such strength as to prevent such damage.

Live Parts Guarded by Distance

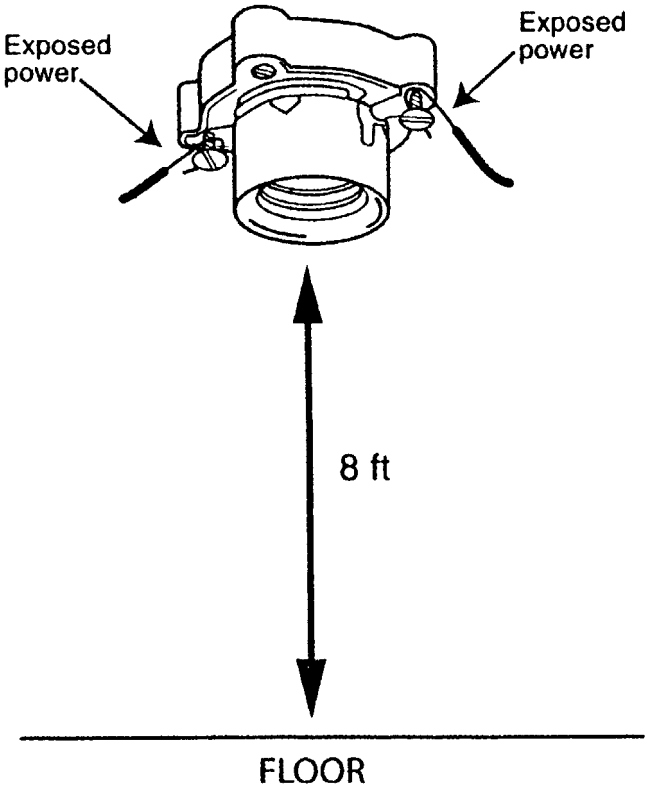

[Statutory Authority: RCW 49.17.010, [49.17].040, and [49.17].050. 01-11-038, § 296-800-28035, filed 5/9/01, effective 9/1/01.]

WAC 296-800-28040 Make sure electrical equipment is effectively grounded. You must:

• Make sure the path to ground from circuits, equipment, and enclosures is permanent and continuous.

• Make sure equipment connected by cord and plug is grounded under these conditions:

– Equipment with exposed noncurrent carrying metal parts.

– Cord and plug connected equipment which may become energized.

– Equipment that operates at over 150 volts to ground.

– Equipment in hazardous locations. (WAC 296-24-95613)

Exemption: This does not apply to guarded motors and metal frames of electrically heated appliances, if the appliance frames are permanently and effectively insulated from ground.

You must:

• Ground the following type of equipment:

– Hand-held motor-operated tools

– Refrigerators

– Freezers

– Air conditioners

– Clothes washers and dryers

– Dishwashers

– Electrical aquarium equipment

– Hedge clippers

– Electric lawn mowers

– Electric snow blowers

– Wet scrubbers
– Tools likely to be used in damp or wet locations
– Appliances used by employees standing on the ground, on metal floors or working inside of metal tanks or boilers
– Portable hand lamps

Note: Grounding can be achieved by: Using tools and appliances equipped with an equipment grounding conductor (three-prong plug and grounded electrical system).

Grounded Plug	Double Insulated
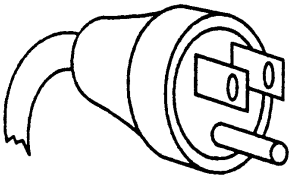	Double Insulated 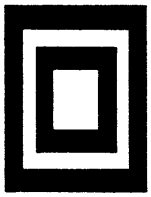
Hand held tools and some other types of equipment must use a 3-wire plug or the tool label must show the tool as insulated by words or symbol.	

You must:

• Make sure exposed metal parts of fixed equipment that do not conduct electricity, but may become energized, are grounded if the equipment is in a wet or damp location and is not isolated.

• Make sure ground wires are identified and look different than the other conductors (wires).

• Make sure grounded conductors are not attached to any terminal or lead to reverse polarity of the electrical outlet or receptacle. See illustration - Examples of wiring.

• Make sure grounding terminals or grounding-type devices on receptacles, cords, connectors, or attachments plugs are not used for purposes other than grounding.

EXAMPLES OF WIRING

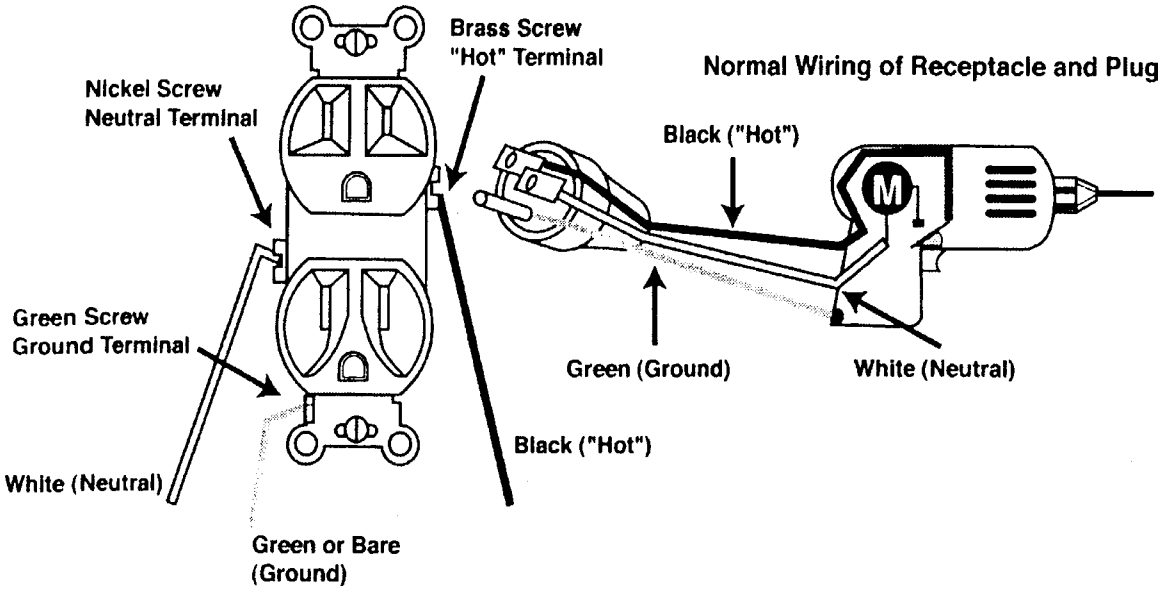

CORRECT WIRING

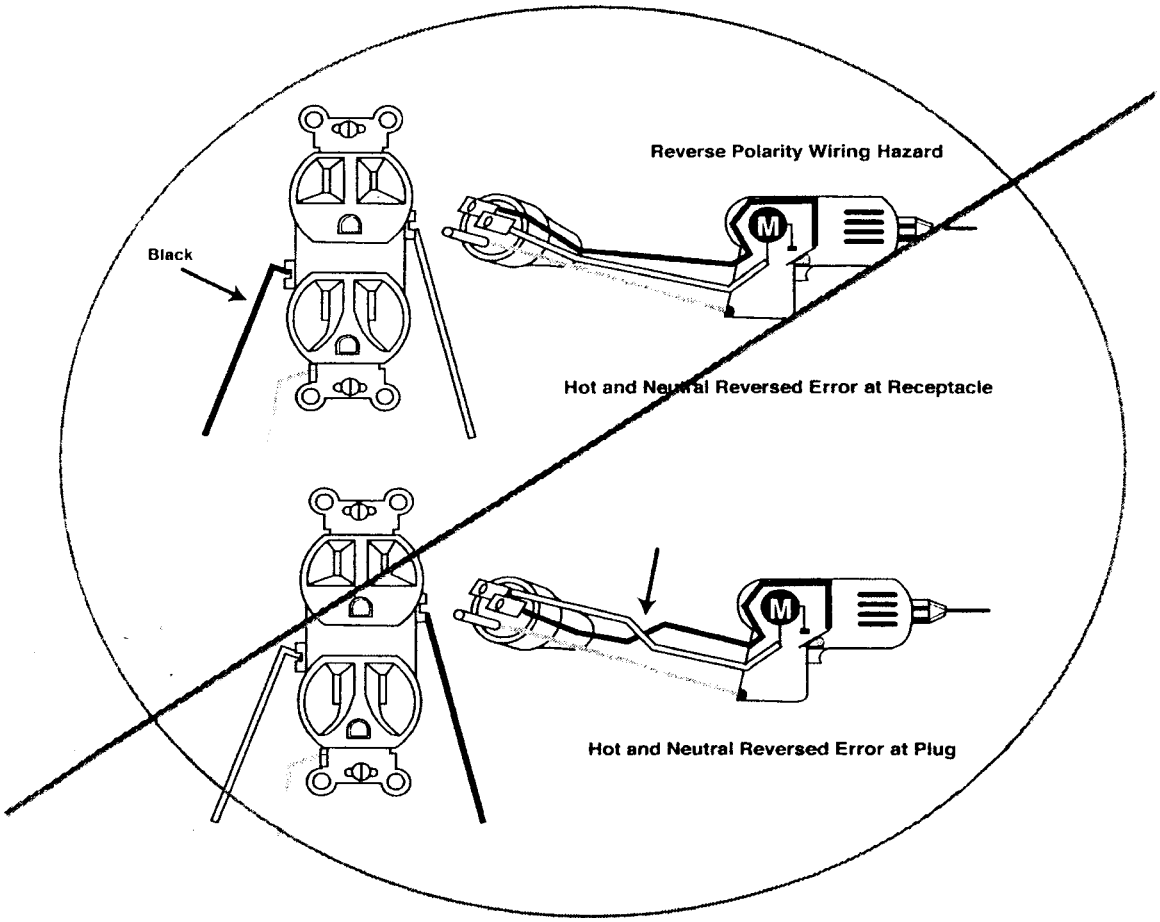

INCORRECT WIRING

[Statutory Authority: RCW 49.17.010, [49.17].040, and [49.17].050. 02-16-047, § 296-800-28040, filed 8/1/02, effective 10/1/02; 01-23-060, § 296-800-28040, filed 11/20/01, effective 12/1/01; 01-11-038, § 296-800-28040, filed 5/9/01, effective 9/1/01.]

WAC 296-800-28045 Make sure electrical equipment has overcurrent protection. You must:

• Make sure all electrical circuits that are rated at 600 volts or less have overcurrent protection.

• Protect conductors and equipment according to their ability to safely conduct electrical current.

• Make sure overcurrent devices do not interrupt the continuity of grounded conductors unless all conductors are opened at the same time, except for motor running overload protection.

– Protect employees from electrical arcing or suddenly moving electrical parts by locating fuses and circuit breakers in safe places. If this is not possible, install shields on fuses and circuit breakers.

• Make sure the following fuses and thermo cutouts have disconnecting mechanisms:

– All cartridge fuses accessible to nonqualified persons

– All fuses on circuits over 150 volts to ground

– All thermal cutouts on circuits over 150 volts to ground

– The disconnecting mechanisms must be installed so you can disconnect the fuses or thermal cutouts without disrupting service to equipment and circuits unrelated to those protected by the overcurrent device.

• Provide easy access to overcurrent devices for each employee or authorized building management personnel.

• Protect the overcurrent devices by locating them away from easily ignitable material.

– They must be placed to avoid exposure to physical damage.

• Make sure circuit breakers:

– Clearly indicate when they are open (off) and closed (on)

– That operate vertically are installed so the handle is in the "up" position when the breaker is closed (on). See WAC 296-24-95603 (2)(c) for more information

– Used as switches in 120-volt, fluorescent lighting circuit must be approved for that purpose and marked "SWD." See WAC 296-24-95603 (2)(c) for more information

– That have arcing or suddenly moving parts, are shielded or located so employees will not get burned or injured by the operation of the circuit breaker.

❖ Make sure fuses that have arcing or suddenly moving parts, are shielded or located so employees will not get burned or injured by the operation of the fuses.

[Statutory Authority: RCW 49.17.010, [49.17].040, and [49.17].050. 02-16-047, § 296-800-28045, filed 8/1/02, effective 10/1/02; 01-11-038, § 296-800-28045, filed 5/9/01, effective 9/1/01.]

PORTABLE LADDERS: METAL AND WOODEN

WAC 296-800-290 Summary. Your responsibility: To make sure the portable ladders in your workplace are used safely and kept in good condition.

Portable metal ladders.

You must:

Inspect your portable metal ladders periodically.

WAC 296-800-29005.

Make sure your portable metal ladders are kept in good condition.

WAC 296-800-29010.

Use your portable metal ladders safely.

WAC 296-800-29015.

Portable wooden ladders.

You must:

Inspect your portable wooden ladders frequently.

WAC 296-800-29020.

Make sure your portable wooden ladders are kept in a good condition.

WAC 296-800-29025.

Use your portable wooden ladders safely and for their intended purpose.

WAC 296-800-29030.

Safely use a portable wooden ladder when working more than 25 feet above ground.

WAC 296-800-29035.

Use wooden stepladders safely.

WAC 296-800-29040.

Exemption: These rules apply to common types of portable wooden ladders except:
- Fruit picker ladders
- Industrial tripod ladders
- Combination step and extension ladders
- Stockroom step ladders
- Aisle way step ladders
- Shelf ladders
- Library ladders
- Other special ladders

Note:
- For design and construction requirements for wood and metal ladders, see WAC 296-24-780 and 296-24-79503 of the General safety and health standard.
- There are different types of ladders. Be sure to use one that is capable of handling the combined weight of the climber and the load being carried (working load).

Type	Duty Rating	Working Load
IAA	Industrial	Special duty—375 lbs. maximum
IA	Industrial	Extra heavy—300 lbs. maximum
I	Industrial	Heavy—250 lbs. maximum
II	Commercial	Medium—225 lbs. maximum
III	Household	Light—200 lbs. maximum

[Statutory Authority: RCW 49.17.010, [49.17].040, and [49.17].050. 01-11-038, § 296-800-290, filed 5/9/01, effective 9/1/01.]

PORTABLE METAL LADDERS

WAC 296-800-29005 Inspect your portable metal ladders periodically. You must:

• Immediately inspect a ladder if it:

– Tips over.

– Is exposed to oil or grease.

– Is exposed to excessive heat as in the case of fire.

– Is subjected to certain acids or alkali solutions.

• If it tips over, look at:

– The rails for dents, bends or dented rungs.

– All the rungs to side rail connections.

– The hardware connections.

– Rivets for shear damage.

• Inspect the cables and ropes on portable metal ladders and replace them if they are defective

• Check hardware fittings and accessories frequently and keep them in good condition

• Mark defective ladders and take them out of service until repaired by a maintenance department or the manufacturer.

[Statutory Authority: RCW 49.17.010, [49.17].040, and [49.17].050. 01-11-038, § 296-800-29005, filed 5/9/01, effective 9/1/01.]

WAC 296-800-29010 Make sure your portable metal ladders are kept in good condition. You must:

• Maintain your portable metal ladders in good, usable condition, at all times.

• Handle portable metal ladders with care and avoid dropping, jarring, or misusing them.

• Store your portable metal ladders on racks designed to protect them when not in use. The racks must have enough supporting points to prevent any possibility of excessive sagging.

• Properly support your ladder while transporting on vehicles. To prevent chafing and the effects of road shock, use supports that are made of material softer than the metal ladder, such as hardwood or rubber-covered iron pipe.

Note: Tying the ladder to each support point will greatly reduce damage due to road shock.

[Statutory Authority: RCW 49.17.010, [49.17].040, and [49.17].050. 01-11-038, § 296-800-29010, filed 5/9/01, effective 9/1/01.]

WAC 296-800-29015 Use your portable metal ladders safely. You must:

(1) Use metal ladders only for their intended purpose.

(2) Make sure the base section of the portable metal ladder has secure footing.

Examples of Securing the Ladder Base

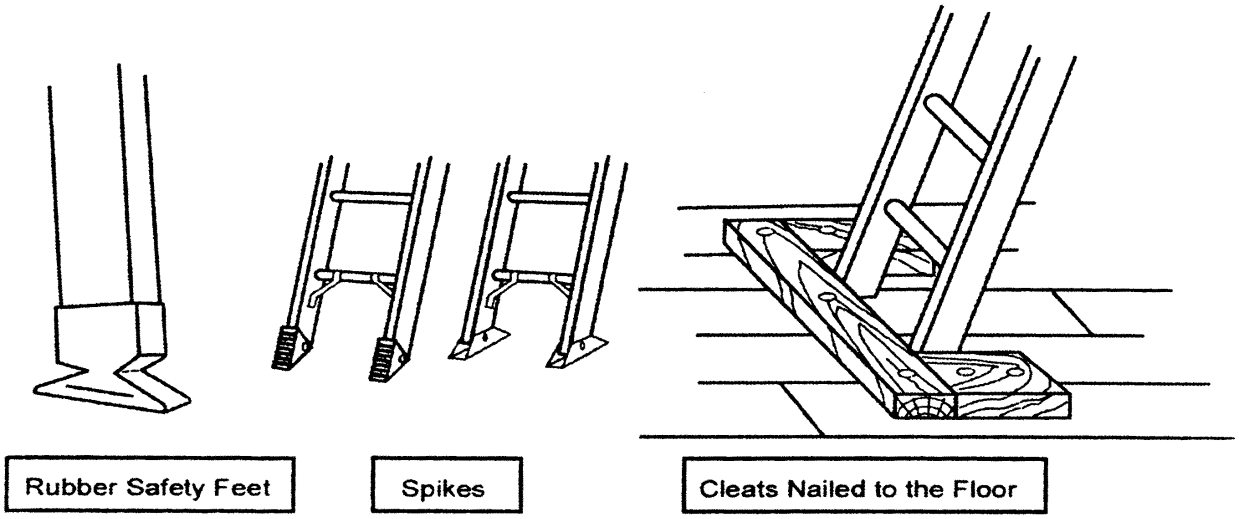

(3) Make sure both rails are supported at the top, unless the ladder has a single support attachment.

Examples of Securing the Ladder at the Top

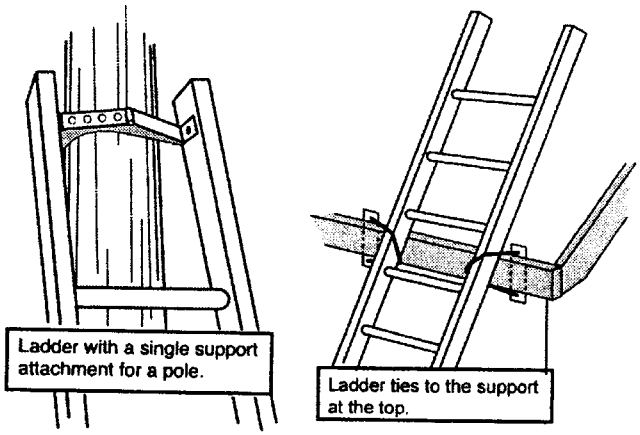

(4) Make sure while climbing portable metal ladders, your employees:

• Have both hands free to hold on to the ladder.

• Face the ladder when you are climbing up or down.

(5) Not tie or fasten ladder sections together to make longer ladders (unless the ladder manufacturer endorses this type of use, and you have hardware fittings specifically designed for this use).

(6) Make sure a nonself-supporting portable ladder is set at a safe angle. The proper angle is to place the base a distance from the vertical wall equal to one-fourth the working length of the ladder.

Note: Safe ladder angle. A simple rule for setting up a ladder at the proper angle is to place the base a distance from the wall, equal to 1/4 the working length of the ladder.

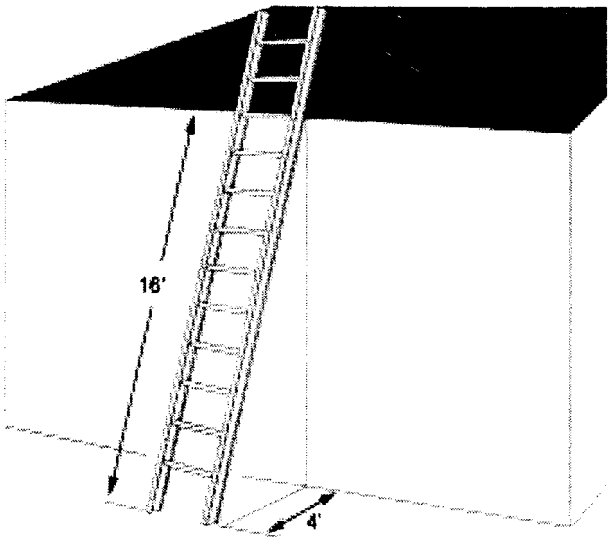

[Statutory Authority: RCW 49.17.010, [49.17].040, and [49.17].050. 01-23-060, § 296-800-29015, filed 11/20/01, effective 12/1/01; 01-11-038, § 296-800-29015, filed 5/9/01, effective 9/1/01.]

PORTABLE WOODEN LADDERS

WAC 296-800-29020 Inspect your portable wooden ladders frequently. You must:

• Make sure ladders with defects are:

– Withdrawn from service to be repaired or destroyed

– Tagged as "dangerous do not use."

[Statutory Authority: RCW 49.17.010, [49.17].040, and [49.17].050. 01-11-038, § 296-800-29020, filed 5/9/01, effective 9/1/01.]

WAC 296-800-29025 Make sure your portable wooden ladders are kept in a good condition. You must:

• Make sure your portable wooden ladders are maintained in good condition, and:

– Joints between the steps or rungs and side rails are tight

– Hardware and fittings are securely attached

– Moveable parts operate freely without binding or excessive play

– Metal bearings are lubricated frequently

– Frayed or badly worn ropes are replaced

– Safety feet and other auxiliary equipment are kept in good condition

• Not use portable wooden ladders with:

– Broken or missing steps

– Broken or missing rungs or cleats

– Broken side rails

– Other faulty equipment

• Not make improvised repairs on your portable wooden ladders.

• Not store your portable wooden ladders near sources of heat, moisture, or dampness.

[Statutory Authority: RCW 49.17.010, [49.17].040, and [49.17].050. 01-23-060, § 296-800-29025, filed 11/20/01, effective 12/1/01; 01-11-038, § 296-800-29025, filed 5/9/01, effective 9/1/01.]

WAC 296-800-29030 Use your portable wooden ladders safely and for their intended purpose. You must:

(1) Use the appropriate length of ladder.

• Use single ladders less than or equal to 30 feet long.

• Use 2-section extension ladders less than or equal to 60 feet long.

(2) Make sure ladders meet the following rules:

• Shorter sections cannot be spliced to make longer sections.

• Ladders cannot be made by fastening cleats across a single rail.

(3) Use ladders safely.

• Make sure ladders are not used as guys, braces, or skids.

• Putting ladders on boxes, barrels or other unstable bases to make the ladder taller is not allowed.

• Make sure ladders are not used in a horizontal position.

(4) Make sure that rung and cleat ladders are set up at a safe angle. (See note and illustration on safe ladder angle in WAC 296-800-29015.)

(5) Make sure that where the top of the ladder rests is reasonably rigid and strong enough to support the load.

(6) Place the bottom of a portable wooden ladder so it will not slip, or the bottom must be tied or held in position.

(7) Not place a portable wooden ladder in front of doors that open towards the ladder, UNLESS YOU:

• Block the door open, or

• Lock the door, or

• Guard the door to keep it from opening into the ladder

(8) Make sure 2-section extension ladders overlap as follows:

Length of section of extension ladders (feet)	Minimum overlap allowed (feet)
Less than 36	3
37-48	4
49-60	5

(9) Make sure ladders with metal reinforced rails are used with the reinforcement on the underside to avoid hazards such as tripping and electrocution.

(10) Not place ladders in elevator shafts and hoistways, except where used by workers assigned to that type of work.

• Employees must be protected from falling objects, when assigned to work on ladders in elevator shafts and hoistways.

(11) Not support more than one section of plank per ladder rung.

• Do not allow more than 2 persons on one section of planking at a time.

(12) Brace the ladder to reduce the spring caused by weight on the ladder.

(13) Keep shoes free and clean of greasy and slippery substances when climbing.

(14) Have both hands free to hold on to the ladder when climbing.

[Statutory Authority: RCW 49.17.010, [49.17].040, and [49.17].050. 01-23-060, § 296-800-29030, filed 11/20/01, effective 12/1/01; 01-11-038, § 296-800-29030, filed 5/9/01, effective 9/1/01.]

WAC 296-800-29035 Safely use a portable wooden ladder when working more than 25 feet above ground. You must:

(1) Secure the ladder at the top and bottom.

(2) Not perform work that requires the use of both hands unless wearing a safety belt and lanyard secured to the ladder.

(3) Not perform work requiring eye protection, respirators and/or pressure equipment if thirty feet above the ground.

[Statutory Authority: RCW 49.17.010, [49.17].040, and [49.17].050. 01-11-038, § 296-800-29035, filed 5/9/01, effective 9/1/01.]

WAC 296-800-29040 Use wooden stepladders safely. You must:

(1) Use stepladders that are less than twenty feet.

(2) Not climb on the bracing or the back legs.

(3) Not use as single ladders.

(4) Not stand on a step higher than the third step from the top, if working five feet or higher from the ground.

(5) Not use the tops of stepladders as steps.

[Statutory Authority: RCW 49.17.010, [49.17].040, and [49.17].050. 01-11-038, § 296-800-29040, filed 5/9/01, effective 9/1/01.]

PORTABLE FIRE EXTINGUISHERS

WAC 296-800-300 Summary—Portable fire extinguishers. Important:

The following WISHA rule applies to the placement, use, maintenance, and testing of portable fire extinguishers provided for the use of employees. Your local fire marshal also enforces fire codes which address fire safety that are more comprehensive and may go beyond WISHA rules.

Your responsibility:

To provide readily accessible, appropriate portable fire extinguishers for employees in your workplace

You must:

Provide portable fire extinguishers in your workplace

WAC 296-800-30005

Select and distribute portable fire extinguishers in your workplace

WAC 296-800-30010

Make sure that portable fire extinguishers are kept fully charged, in good operating condition, and left in their designated places

WAC 296-800-30015

Inspect and test all portable fire extinguishers

WAC 296-800-30020

Train your employees to use portable fire extinguishers

WAC 296-800-30025

Exemptions:

• You are exempt from the requirements of portable fire extinguishers if you have the following:

– A written fire safety policy that requires the immediate and total evacuation of employees from the workplace when there is a fire alarm signal,

AND

– An emergency action plan and a fire prevention plan which meet the requirements of WAC 296-24-567

AND

– Portable fire extinguishers in your workplace that are not accessible for employee use

• If another WISHA rule requires portable fire extinguishers, then you must comply with these requirements.

• Where extinguishers are provided but are not intended for employee use and you have an emergency action plan and a fire prevention plan (which meet the requirements of WAC 296-24-567), then only the requirements of WAC 296-800-30020 apply.

Note: The introduction has important information about building, electrical and fire codes that may apply to you in addition to WISHA rules. See "How do the WISHA rules relate to building, fire and electrical codes" in the introduction section of this book.

[Statutory Authority: RCW 49.17.010, [49.17].040, and [49.17].050. 01-23-060, § 296-800-300, filed 11/20/01, effective 12/1/01; 01-11-038, § 296-800-300, filed 5/9/01, effective 9/1/01.]

WAC 296-800-30005 Provide portable fire extinguishers in your workplace. You must:

(1) Provide approved portable fire extinguishers for your workplace and distribute them so they are readily accessible

• Make sure that your portable fire extinguisher does not use extinguishing agents such as carbon tetrachloride or chlorobromomethane extinguishing agents. In addition, soda-acid foam, loaded stream, antifreeze and water extinguishers of the inverting type shall not be recharged or placed into service.

(2) Mount, locate, and identify portable fire extinguishers so employees can easily reach them, without being subjected to possible injury.

[Statutory Authority: RCW 49.17.010, [49.17].040, and [49.17].050. 01-11-038, § 296-800-30005, filed 5/9/01, effective 9/1/01.]

WAC 296-800-30010 Select and distribute portable fire extinguishers in your workplace. Exemption:

• This does not apply to the portable fire extinguishers provided for employees to use outside of workplace buildings or structures.

• You are exempt from the distribution requirements of this rule if you have an emergency action plan (that meets requirements of WAC 296-24-567):

– Which designates certain employees to be the only employees authorized to use the available portable fire extinguishers; and

– Requires all other employees in the fire area to immediately evacuate the affected work area upon the sounding of the fire alarm

You must:

• Provide the correct type of portable fire extinguishers and distribute them in your workplace, depending on the type, size, and severity of fire that could occur

– The type of portable fire extinguishers you must have in your workplace depends on the types of fire hazards that exist in your workplace

Fire Extinguisher Distance Table

Type of fire hazard extinguisher	Maximum distance from the fire hazard to a fire extinguisher
Type of fire hazard Wood, cloth, paper, rubber (Class A fire hazards)	No more than 75 feet (22.9 m) Note: You may use uniformly spaced standpipe systems or hose stations instead of Class A portable fire extinguishers, if they meet the requirements of WAC 296-24-602 or 296-24-607.
Liquids, grease, gases (Class B fire hazards)	No more than 50 feet (15.2 m) Note: You may choose to use a smaller fire extinguisher in lieu of that required for the 50 foot distance. If you choose to have the smaller fire extinguisher, the travel distance must not be greater than 30 feet. See UFC Standard 10 Chapter 3 for the basic minimum extinguisher rating allowed.
Live electrical equipment and circuits (Class C fire hazards)	Distribute any Class C portable fire extinguishers the same pattern that you have for any Class A or Class B fire hazards. Note: If the electrical equipment is deenergized, you may use a Class A or Class B portable fire extinguisher.
Powder, flakes, and residue from combustible metals, like magnesium and titanium, that build up over a 2-week period (Class D fire hazards)	No more than 75 feet (22.9 m)

[Statutory Authority: RCW 49.17.010, [49.17].040, and [49.17].050. 01-23-060, § 296-800-30010, filed 11/20/01, effective 12/1/01; 01-11-038, § 296-800-30010, filed 5/9/01, effective 9/1/01.]

WAC 296-800-30015 Make sure that portable fire extinguishers are kept fully charged, in operable condition, and left in their designated places. You must:

• Make sure that fire extinguishers found with deficiencies are removed from service and replaced with a suitable fire extinguisher.

[Statutory Authority: RCW 49.17.010, [49.17].040, and [49.17].050. 01-11-038, § 296-800-30015, filed 5/9/01, effective 9/1/01.]

WAC 296-800-30020 Inspect and test all portable fire extinguishers. You must:

• Perform inspections:

– Make sure that portable fire extinguishers or hose systems (used instead of fire extinguishers) are visually inspected monthly

• Perform maintenance checks:

– Make sure that all portable fire extinguishers are subjected to an annual maintenance check

– Keep records of all annual maintenance checks and make available to the department upon request

❖ For 1 year after the last maintenance check;

OR

❖ For the life of the shell, whichever is less

– Make sure that equal protection is provided when portable fire extinguishers are removed from service for maintenance and recharging

Exemption: Most stored pressure extinguishers do not require an internal examination. Examples of those that do require an internal examination are those containing a loaded stream agent.

You must:

• Perform hydrostatic testing:

Exemption:

• Dry chemical extinguishers that have nonrefillable disposable containers are exempt from this requirement.

• Manually pressurized pumptanks are exempt from this requirement.

You must:

• Make sure that portable extinguishers are hydrostatically tested:

– At the intervals listed in Table 1, of this section

– Whenever they show evidence of corrosion or mechanical injury

• Not perform hydrostatic testing on fire extinguishers if:

– The unit has been repaired by soldering, welding, brazing, or use of patching compounds

– The cylinder or shell threads are damaged

– Corrosion has caused pitting, including corrosion under removable name plate assemblies

– The extinguisher has been burned in a fire

– Calcium chloride extinguishing agents have been used in a stainless steel shell

Note: Specific rules regarding conducting hydrostatic tests are covered in WAC 296-24-59212.

You must:

• Maintain records showing that hydrostatic testing has been performed. Provide the following evidence to the department upon request:

– Date of test

– Test pressure used

– The serial number, or other identifier of the fire extinguisher that was tested

– Person or agency performing the test

• Keep records until:

– The extinguisher is retested;

OR

– The extinguisher is taken out of service, whichever comes first

• Empty and maintain stored-pressure dry chemical extinguishers requiring a 12-year hydrostatic test, every six years:

– When recharging or hydrostatic testing is performed, the 6-year requirement begins from that date

Hydrostatic Test Table

Type of Extinguisher	Test Interval (Years)
Stored pressure water and/or antifreeze	5
Wetting agent	5
Foam (stainless steel shell)	5
Aqueous film forming form (AFFF)	5
Loaded stream	5
Dry chemical with stainless steel	5
Carbon dioxide	5
Dry chemical, stored pressure, with mild steel, brazed brass or aluminum shells	12
Halon 1211	12
Halon 1301	12
Dry powder, cartridge or cylinder operated, with mild steel shell	12

Note: Due to a manufacturer's recall, stored pressure water extinguishers with fiberglass shell (pre-1976) are prohibited from hydrostatic testing.

[Statutory Authority: RCW 49.17.010, [49.17].040, and [49.17].050. 01-23-060, § 296-800-30020, filed 11/20/01, effective 12/1/01; 01-11-038, § 296-800-30020, filed 5/9/01, effective 9/1/01.]

WAC 296-800-30025 Train your employees to use portable fire extinguishers. You must:

• Train your employees where you have provided portable fire extinguisher for their use in:

– The hazards involved with incipient stage fire fighting (the early stage of a fire when it can be extinguished by a portable fire extinguisher)

– The general principles of fire extinguisher use

• Provide the training when they are first hired and then annually.

[Statutory Authority: RCW 49.17.010, [49.17].040, and [49.17].050. 01-11-038, § 296-800-30025, filed 5/9/01, effective 9/1/01.]

EXIT ROUTES AND EMPLOYEE ALARM SYSTEMS

WAC 296-800-310 Summary. Your responsibility: To provide and maintain emergency exit routes and to install and maintain adequate employee alarm systems.

Exit routes:

You must:

Provide an adequate number of exit routes.

WAC 296-800-31005.

Make sure that exit routes are large enough.

WAC 296-800-31010.

Make sure that exit routes meet their specific design and construction requirements.

WAC 296-800-31015.

Make sure that each exit route leads outside.

WAC 296-800-31020.

Provide unobstructed access to exit routes.

WAC 296-800-31025.

Exit doors must be readily opened from the inside.

WAC 296-800-31030.

Use side-hinged doors to connect rooms to exit routes.

WAC 296-800-31035.

Provide outdoor exit routes that meet requirements.

WAC 296-800-31040.

Minimize danger to employees while they are using emergency exit routes.

WAC 296-800-31045.

Mark exits adequately.

WAC 296-800-31050.

Provide adequate lighting for exit routes and signs.

WAC 296-800-31053.

Maintain the fire retardant properties of paints or other coatings.

WAC 296-800-31055.

Maintain emergency safeguards.

WAC 296-800-31060.

Maintain exit routes during construction and repair.

WAC 296-800-31065.

Provide doors in freezer or refrigerated rooms that open from the inside.

WAC 296-800-31067.

Employee alarm systems:

You must:

Install and maintain an appropriate employee alarm system.

WAC 296-800-31070.

Establish procedures for sounding emergency alarms.

WAC 296-800-31075.

Test the employee alarm system.

WAC 296-800-31080.

Exemption: This rule does not apply to vehicles, vessels, or other mobile structures.

Note: The introduction has important information about building, electrical and fire codes that may apply to you in addition to WISHA rules. See "How do the WISHA rules relate to building, fire, and electrical codes" in the introduction section of this book.

[Statutory Authority: RCW 49.17.010, [49.17].040, and [49.17].050. 01-23-060, § 296-800-310, filed 11/20/01, effective 12/1/01; 01-11-038, § 296-800-310, filed 5/9/01, effective 9/1/01.]

EXIT ROUTES

WAC 296-800-31005 Provide an adequate number of exit routes. You must:

• Provide a minimum of two exit routes to provide different ways for employees to leave the workplace safely during an emergency (at least two of the exit routes must be remote from one another so employees can safely exit if one exit route becomes blocked or unavailable).

• Provide an adequate number (at least two) of exit routes, considering the kind, number, location and capacity, appropriate to each building according to the following conditions:

– Number of employees

– Size of building

– Arrangement of workplace

– Building occupancy

Note: A single exit route is permitted where the number of employees, the size of the building, its occupancy, or the arrangement of the workplace indicates that a single exit will allow all employees to exit safely during an emergency. Other means of escape, such as fire exits or accessible windows, should be available where only one exit route is provided.

[Statutory Authority: RCW 49.17.010, [49.17].040, and [49.17].050. 01-11-038, § 296-800-31005, filed 5/9/01, effective 9/1/01.]

WAC 296-800-31010 Make sure that exit routes are large enough. You must:

• Make sure each exit route is large enough to accommodate the maximum-permitted occupant load for each floor served by the route.

• Make sure the capacity of an exit route does not decrease at any point.

• Make sure an exit route is at least 6 feet 8 inches high at all points.

– Make sure objects that stick out into the exit route, such as fans hanging from the ceilings or cabinets on walls, do not reduce the minimum height and width of the exit route.

• Make sure exit routes are at least 28 inches wide at all points between any handrails.

– If necessary, routes must be wider than 28 inches to accommodate the expected occupant load.

[Statutory Authority: RCW 49.17.010, [49.17].040, and [49.17].050. 01-23-060, § 296-800-31010, filed 11/20/01, effective 12/1/01; 01-11-038, § 296-800-31010, filed 5/9/01, effective 9/1/01.]

WAC 296-800-31015 Make sure that exit routes meet their specific design and construction requirements. You must:

• Make sure each exit is a permanent part of the workplace.

• Make sure an exit route has only those openings necessary to permit access to, or exit from, occupied areas of the workplace.

• Make sure any opening into an exit through a fire wall is protected by a self-closing fire door that remains closed.

• Make sure each fire door, its frame, and its hardware is listed or approved by a nationally recognized testing laboratory.

• Make sure construction materials, used to separate an exit route, have at least:

– One-hour fire resistance rating if the exit connects three stories or less.

– Two-hour fire resistance rating if the exit connects four stories or more.

• Make sure employees are provided with stairs or a ramp, if the exit route is not substantially level.

[Statutory Authority: RCW 49.17.010, [49.17].040, and [49.17].050. 01-11-038, § 296-800-31015, filed 5/9/01, effective 9/1/01.]

WAC 296-800-31020 Make sure that each exit route leads outside. You must:

• Make sure that building exit routes lead:

– Directly outside or to a street, walkway; or to an open space with access to the outside.

– To streets, walkways, or open spaces large enough to accommodate all building occupants likely to use the exit.

• Make sure the exit routes clearly show the route employees use to leave the building in an emergency.

• Install a standard safeguard with a warning sign, if a doorway or corner of a building could allow an employee to walk in front of an engine or trolley.

• Use doors, partitions, or other effective means to show employees the correct route out of the building, if the stairs in your exit route lead anywhere but out of the building.

Note: If the stairs in your exit route lead past the exit to the basement, you might install a gate at the point they lead towards that basement. The gate could help your employees stay on the exit route taking them out of the building.

[Statutory Authority: RCW 49.17.010, [49.17].040, and [49.17].050. 01-11-038, § 296-800-31020, filed 5/9/01, effective 9/1/01.]

WAC 296-800-31025 Provide unobstructed access to exit routes. You must:

(1) Provide exit routes that are always free of obstructions so all employees can safely exit the building during an emergency.

(2) Make sure employees are not required to travel to a dead end or through a room that can be locked, such as a restroom.

[Statutory Authority: RCW 49.17.010, [49.17].040, and [49.17].050. 01-11-038, § 296-800-31025, filed 5/9/01, effective 9/1/01.]

WAC 296-800-31030 Exit doors must be readily opened from the inside.

Exemption: An exit door may be locked or blocked from the inside in a mental, penal, or correctional institution, if supervisory personnel are continuously on duty and a plan exists to remove employees and inmates during an emergency.

You must:

• Make sure all exit doors readily open from the inside without keys, tools, or special knowledge. A device that locks only from the outside, such as a panic bar, is permitted. An exit door must be free of any device or alarm that could restrict emergency use of an exit if the device or alarm fails.

[Statutory Authority: RCW 49.17.010, [49.17].040, and [49.17].050. 01-11-038, § 296-800-31030, filed 5/9/01, effective 9/1/01.]

WAC 296-800-31035 Use side-hinged doors to connect rooms to exit routes. You must:

• Use a side-hinged exit door to connect any room to an exit route. The door must swing out when the room:

– Is occupied by more than fifty persons or

– Contains highly flammable or explosive materials.

[Statutory Authority: RCW 49.17.010, [49.17].040, and [49.17].050. 01-23-060, § 296-800-31035, filed 11/20/01, effective 12/1/01; 01-11-038, § 296-800-31035, filed 5/9/01, effective 9/1/01.]

WAC 296-800-31040 Provide outdoor exit routes that meet these requirements. You must:

• Make sure an outdoor exit route (such as an interior balcony, porch, gallery, or roof) meets all requirements for an indoor exit route. In addition, an outdoor exit route must also:

– Have guardrails to protect unenclosed sides.

– Be covered if snow or ice is likely to accumulate without regular removal.

– Be reasonably straight with smooth, solid, substantially level floors.

– Have no dead ends more than twenty feet long that branch off of the exit route.

[Statutory Authority: RCW 49.17.010, [49.17].040, and [49.17].050. 01-11-038, § 296-800-31040, filed 5/9/01, effective 9/1/01.]

WAC 296-800-31045 Minimize danger to employees while they are using emergency exit routes. You must:

• Maintain each exit route to minimize danger to employees during an emergency.

• Keep each exit route free of explosive or highly flammable furnishings and decorations.

• Not require employees to travel toward areas where high hazard materials are stored, unless the route is protected by partitions or physical barriers. High hazard materials are materials that:

– Burn quickly

– Emit poisonous fumes when burned

– Are explosive

[Statutory Authority: RCW 49.17.010, [49.17].040, and [49.17].050. 01-11-038, § 296-800-31045, filed 5/9/01, effective 9/1/01.]

WAC 296-800-31050 Mark exits adequately.

You must:

• Mark each exit with a clearly visible, distinctive sign reading "exit."

• Make sure the letters in the word "EXIT" are at least six inches high and 3/4 inch wide.

• Mark any doorway or passage that might be mistaken for an exit with "not an exit" or with an indication of its actual use.

• Make sure exit signs are a distinctive color.

• Make sure signs are posted and arranged along exit routes to adequately show how to get to the nearest exit and clearly indicate the direction of travel.

• Not obstruct or conceal exit signs in any way.

• Keep exit doors free of signs or decorations that obscure their visibility.

[Statutory Authority: RCW 49.17.010, 49.17.040, 49.17.050, and 49.17.060. 03-18-090, § 296-800-31050, filed 9/2/03, effective 11/1/03. Statutory Authority: RCW 49.17.010, [49.17].040, and [49.17].050. 01-11-038, § 296-800-31050, filed 5/9/01, effective 9/1/01.]

WAC 296-800-31053 Provide adequate lighting for exit routes and signs. You must:

• Illuminate each exit route adequately and reliably.

• Have at least five foot-candles illumination from a reliable light source.

• Make sure any exit signs illuminated by artificial lights and made of translucent material (other than internally illuminated types)

– Have screens, discs or lens of at least twenty-five square inches in size; and

– Show red or other designated color on the approach side of the exit.

• Make sure brightly lit signs, displays, or objects in or near the line of vision do not distract attention from the exit sign.

• Make sure exit signs that are self-lighting have a minimum luminance surface value of .06 footlamberts.

[Statutory Authority: RCW 49.17.010, [49.17].040, and [49.17].050. 01-11-038, § 296-800-31053, filed 5/9/01, effective 9/1/01.]

WAC 296-800-31055 Maintain the fire retardant properties of paints or other coatings. You must:

• Maintain any paints or other coatings with fire retardant properties so they retain their fire retardant properties.

[Statutory Authority: RCW 49.17.010, [49.17].040, and [49.17].050. 01-11-038, § 296-800-31055, filed 5/9/01, effective 9/1/01.]

WAC 296-800-31060 Maintain emergency safeguards. You must:

• Maintain each safeguard in proper working order to protect employees during an emergency. Emergency safeguards include items such as:

– Sprinkler systems.

– Alarm systems.

– Fire doors.

– Exit lighting.

[Statutory Authority: RCW 49.17.010, [49.17].040, and [49.17].050. 01-11-038, § 296-800-31060, filed 5/9/01, effective 9/1/01.]

WAC 296-800-31065 Maintain exit routes during construction and repair. You must:

• Have enough exit routes that comply with these rules before letting your employees occupy a workplace under new construction.

• Make sure that employees do not occupy an existing workplace unless:

– All exits and existing fire protection are maintained; or

– Alternate fire protection is provided that ensures an equivalent level of safety.

• Make sure that flammable or explosive materials used during construction or repair do not expose employees to additional hazards or prevent emergency escape.

[Statutory Authority: RCW 49.17.010, [49.17].040, and [49.17].050. 01-11-038, § 296-800-31065, filed 5/9/01, effective 9/1/01.]

WAC 296-800-31067 Provide doors in freezer or refrigerated rooms that open from the inside. You must:

• Make sure that walk-in refrigerators or freezer rooms have doors with opening devices allowing them to be opened from the inside even when they are locked from the outside.

[Statutory Authority: RCW 49.17.010, [49.17].040, and [49.17].050. 01-11-038, § 296-800-31067, filed 5/9/01, effective 9/1/01.]

WAC 296-800-31070 Install and maintain an appropriate employee alarm system.

Exemptions:

- If you have ten or fewer employees in a particular workplace, you can use direct voice communication to sound the alarm, if all employees can hear it. For this kind of workplace, you do not need a back-up system.
- In workplaces where employees would not otherwise be able to recognize audible or visible alarms, you can use tactile devices to alert them.

You must:

• Make sure that a working employee alarm system with a distinctive signal to warn employees of fire or other emergencies is installed and maintained, unless employees can see or smell a fire or other hazard.

• Make sure that the following systems meet the requirements of this rule, if you use them as your employee alarm system:

– Supervisory alarms

– Discharge alarms

– Detection systems required on fixed extinguishing systems

– Detection systems required on fire suppression systems

• Make sure that your employee alarm systems are:

– Providing enough warning to allow employees to safely escape from the workplace, the immediate work area, or both.

– Noticeable above surrounding noise or light levels by all employees in the affected portions of the workplace.

– Distinctive and recognizable as a signal, to evacuate the work area.

– Restored to working order as soon as possible, after each test or alarm.

– Supervised, if installed after July 1, 1982, and if it has that capacity.

– Able to alert assigned personnel whenever a malfunction exists in the system.

– Adequately warning employees of emergencies.

– Serviced, maintained, and tested by a person trained in the alarm system's design and functions to keep the system operating reliably and safely.

– In working order, except when undergoing repairs or maintenance.

– Warning employees of fire or other emergencies with a distinctive signal, if they are not able to see or smell a fire or other hazard.

– Manual actuation devices that, if provided, are unobstructed, easy to find, and readily accessible.

– Using alarm devices, components, combinations of devices, or systems with approved construction and installation. This applies to steam whistles, air horns, strobe lights, or similar lighting devices, as well as tactile devices.

– Supplied with spare alarm devices available to restore the system promptly if a component breaks, is worn, or destroyed.

– Kept in full operating condition by maintaining and replacing power supplies as often as necessary.

– Supplied with a back-up means of alarm, such as employee runners or telephones, when regular systems are out of service.

[Statutory Authority: RCW 49.17.010, [49.17].040, and [49.17].050. 01-11-038, § 296-800-31070, filed 5/9/01, effective 9/1/01.]

WAC 296-800-31075 Establish procedures for sounding emergency alarms. You must:

• Explain to each employee how to sound the alert for emergencies. Methods of reporting emergencies can include:

– Manual pull box alarms.

– Public address systems.

– Radio.

– Telephones.

• Post emergency numbers near telephones, employee notice boards, or other conspicuous locations, if you use telephones to report emergencies.

• Require that all emergency messages have priority over all nonemergency messages if the communication system also serves as an employee alarm system.

[Statutory Authority: RCW 49.17.010, [49.17].040, and [49.17].050. 01-11-038, § 296-800-31075, filed 5/9/01, effective 9/1/01.]

WAC 296-800-31080 Test the employee alarm system. You must:

• Test the reliability and adequacy of your employee alarm system every two months.

– Use a different activation device in each test of a multiactuation device system, so the entire alarm system gets tested.

• Make sure that supervised (monitored) employee alarm systems are tested at least once a year for reliability and adequacy.

[Statutory Authority: RCW 49.17.010, [49.17].040, and [49.17].050. 01-11-038, § 296-800-31080, filed 5/9/01, effective 9/1/01.]

ACCIDENT REPORTING AND INVESTIGATING

WAC 296-800-320 Summary. Your responsibility:

To report and conduct an investigation of certain types of accidents.

You must:

Report the death, or probable death, of any employee, or the in-patient hospitalization of 2 or more employees within 8 hours

WAC 296-800-32005

Make sure that any equipment involved in an accident is not moved.

WAC 296-800-32010

Assign people to assist the department of labor and industries

WAC 296-800-32015

Conduct a preliminary investigation for all serious injuries

WAC 296-800-32020

Document the investigation findings

WAC 296-800-32025

Note: Call the nearest office of the department of labor and industries at 1-800-4BE SAFE or call Occupational Safety and Health Administration (OSHA) at 1-800-321-6742, to report the death, probable death of any employee or the in-patient hospitalization of 2 or more employees within 8 hours, after handling medical emergencies.

[Statutory Authority: RCW 49.17.010, [49.17].040, and [49.17].050. 01-23-060, § 296-800-320, filed 11/20/01, effective 12/1/01; 01-11-038, § 296-800-320, filed 5/9/01, effective 9/1/01.]

WAC 296-800-32005 Report the death, probable death of any employee, or the in-patient hospitalization of 2 or more employees within 8 hours. You must:

• Contact the nearest office of the department of labor and industries in person or by phone at 1-800-4BE SAFE to report within 8 hours of the work-related incident or accident,

– A death

– A probable death

– 2 or more employees are admitted to the hospital, or

– Contact the Occupational Safety and Health Administration (OSHA) by calling its central number at 1-800-321-6742.

• Provide the following information within 30 days concerning any accident involving a fatality or hospitalization of 2 or more employees:

– Name of the work place

– Location of the incident

– Time and date of the incident

– Number of fatalities or hospitalized employees

– Contact person

– Phone number

– Brief description of the incident

Note: If you do not learn about the incident at the time it occurs, you must report the incident within 8 hours of the time it was reported to you, your agent, or employee.

[Statutory Authority: RCW 49.17.010, [49.17].040, and [49.17].050. 01-23-060, § 296-800-32005, filed 11/20/01, effective 12/1/01; 01-11-038, § 296-800-32005, filed 5/9/01, effective 9/1/01.]

WAC 296-800-32010 Make sure that any equipment involved in an accident is not moved. You must:

• Not move equipment involved in a work or work related accident or incident if any of the following results:

– A death

– A probable death

– 2 or more employees are sent to the hospital

• Not move the equipment until a representative of the department of labor and industries investigates the incident and releases the equipment unless:

– Moving the equipment is necessary to:

❖ Remove any victims

❖ Prevent further incidents and injuries

[Statutory Authority: RCW 49.17.010, [49.17].040, and [49.17].050. 01-11-038, § 296-800-32010, filed 5/9/01, effective 9/1/01.]

WAC 296-800-32015 Assign people to assist the department of labor and industries. You must:

• Assign witnesses and other employees to assist department of labor and industries personnel who arrive at the scene to investigate the incident involving:

– A death

– Probable death

– 2 or more employees are sent to the hospital.

Include:

– The immediate supervisor

– Employees who were witnesses to the incident

– Other employees the investigator feels are necessary to complete the investigation

[Statutory Authority: RCW 49.17.010, [49.17].040, and [49.17].050. 01-11-038, § 296-800-32015, filed 5/9/01, effective 9/1/01.]

WAC 296-800-32020 Conduct a preliminary investigation for all serious injuries. You must:

• Make sure your preliminary investigation is conducted to evaluate the facts relating to the cause of the incident by the following people:

– A person designated by the employer

– The immediate supervisor of the injured employee

– Witnesses

– An employee representative, such as a shop steward or other person chosen by the employees to represent them

– Any other person who has the experience and skills.

• If the employee representative is the business agent of the employee bargaining unit and is unavailable to participate without delaying the investigation group, you may proceed, by using one of the following:

– The shop steward

– An employee representative member of your safety committee

– A person selected by all employees to represent them

Note: A preliminary investigation includes noting information such as the following:
- Where did the accident or incident occur?
- What time did it occur?
- What people were present?
- What was the employee doing at the time of the accident or incident?
- What happened during the accident or incident?

[Statutory Authority: RCW 49.17.010, [49.17].040, and [49.17].050. 01-11-038, § 296-800-32020, filed 5/9/01, effective 9/1/01.]

WAC 296-800-32025 Document the preliminary investigation findings. You must:

• Document the preliminary investigation findings for use at any formal investigation.

[Statutory Authority: RCW 49.17.010, [49.17].040, and [49.17].050. 02-16-047, § 296-800-32025, filed 8/1/02, effective 10/1/02; 01-11-038, § 296-800-32025, filed 5/9/01, effective 9/1/01.]

RELEASING ACCIDENT INVESTIGATION REPORTS

WAC 296-800-330 Releasing accident investigation reports. The department must:

• Keep accident investigations and related reports confidential.

• Not freely release results of accident investigations and related reports that are confidential.

• Make available accident investigation reports, without the need of a court order, only to the following:

– Injured workers, their legal representatives, or their labor organization representatives.

– The legal representative or labor organization representative of a deceased worker.

– The employer of any injured or deceased worker.

– Any other employer or person whose actions or business operations are the subject of the report or investigation.

– Any attorney representing a party in any pending legal action in which an investigative report constitutes material and relevant evidence.

– Employees of governmental agencies in the performance of their official duties.

– Any beneficiary of a deceased worker actually receiving benefits under the terms of Title 51 RCW, the Industrial Insurance Act.

Note: The records officer may provide accident investigation reports to the closest surviving member of the deceased worker's immediate family.

[Statutory Authority: RCW 49.17.010, [49.17].040, and [49.17].050. 01-11-038, § 296-800-330, filed 5/9/01, effective 9/1/01.]

PROTECTING THE IDENTITY OF THE SOURCE OF CONFIDENTIAL INFORMATION

WAC 296-800-340 Protecting the identity of the source of confidential information. The department must:

• Not reveal the source of information when a promise has been made to keep the identity of the source confidential.

• Not disclose information that would reveal the source's identity, whenever a department file contains an investigative report or information from a source under a promise of confidentiality.

– The contents of an investigative report may be withheld only to the extent necessary to conceal the identity of the source.

– When information is withheld, the records officer must give a general characterization of the information withheld, but must not reveal the identity of the information's source.

[Statutory Authority: RCW 49.17.010, [49.17].040, and [49.17].050. 01-11-038, § 296-800-340, filed 5/9/01, effective 9/1/01.]

WISHA APPEALS, PENALTIES AND OTHER PROCEDURAL RULES

WAC 296-800-350 Introduction.

This section describes actions WISHA takes during or after inspections, and your related obligation and rights.

Your responsibility: You must follow posting requirements and notify your employees of the information listed in these rules, as indicated.

You must:

WISHA INSPECTIONS AND CITATIONS

Types of workplace inspections
WAC 296-800-35002 . . . . . .
Scheduling inspections
WAC 296-800-35004 . . . . . .
Inspection techniques
WAC 296-800-35006 . . . . . .
Response to complaints submitted by employees or their representatives
WAC 296-800-35008 . . . . . .
Citations mailed after an inspection
WAC 296-800-35010 . . . . . .
Employees (or their representatives) can request a citation and notice
WAC 296-800-35012 . . . . . .
Posting a citation and notice and employee complaint information
WAC 296-800-35016 . . . . . .

CIVIL PENALTIES FOR VIOLATING WISHA REQUIREMENTS

Reasons to assess civil penalties
WAC 296-800-35018 . . . . . .
Minimum penalties
WAC 296-800-35020 . . . . . .

HOW CIVIL PENALTIES ARE CALCULATED

Base penalty calculations - severity and probability
WAC 296-800-35022 . . . . . .
Severity rate determination

WAC 296-800-35024 . . . . . .
Probability rate determination
WAC 296-800-35026 . . . . . .
Determining the gravity of a violation
WAC 296-800-35028 . . . . . .
Base penalty adjustments
WAC 296-800-35030 . . . . . .
Types of base penalty adjustments
WAC 296-800-35032 . . . . . .
Minimum and maximum adjusted base penalty amounts
WAC 296-800-35038 . . . . . .
Reasons for increasing civil penalty amounts
WAC 296-800-35040 . . . . . .

CERTIFY THAT VIOLATIONS HAVE BEEN ABATED

Employers must certify that violations have been abated
WAC 296-800-35042 . . . . . .
For willful, repeated, or serious violations, submit additional documentation
WAC 296-800-35044 . . . . . .
Submitting correction action plans
WAC 296-800-35046 . . . . . .
Submit progress reports to the department, when required
WAC 296-800-35048 . . . . . .
WISHA determines the date by which abatement documents must be submitted
WAC 296-800-35049 . . . . . .
Inform affected employees and their representatives of abatement actions you have taken
WAC 296-800-35050 . . . . . .
Tag cited moveable equipment to warn employees of a hazard
WAC 296-800-35052 . . . . . .

REQUESTING MORE TIME TO COMPLY

You can request more time to comply
WAC 296-800-35056 . . . . . .
WISHA's response to your request for more time
WAC 296-800-35062 . . . . . .
Post the department's response
WAC 296-800-35063 . . . . . .
A hearing can be requested about the department's response
WAC 296-800-35064 . . . . . .
Post the department's hearing notice
WAC 296-800-35065 . . . . . .
Hearing procedures
WAC 296-800-35066 . . . . . .
Post the hearing decision
WAC 296-800-35072 . . . . . .

REQUESTING AN APPEAL OF WISHA CITATIONS AND CORRECTIVE NOTICES

Employers and employees can request an appeal of a citation and notice
WAC 296-800-35076 . . . . . .
Await the department's response to your appeal request
WAC 296-800-35078 . . . . . .
Department actions when reassuming jurisdiction over an appeal
WAC 296-800-35080 . . . . . .
Appealing a corrective notice
WAC 296-800-35082 . . . . . .
Notify employees
WAC 296-800-35084 . . . . . .

[Statutory Authority: RCW 49.17.010, 49.17.040, 49.17.050, and 49.17.060. 03-18-090, § 296-800-350, filed 9/2/03, effective 11/1/03. Statutory Authority: RCW 49.17.010, [49.17].040, and [49.17].050. 01-23-060, § 296-800-350, filed 11/20/01, effective 12/1/01; 01-11-038, § 296-800-350, filed 5/9/01, effective 9/1/01.]

WISHA INSPECTIONS AND CITATIONS

WAC 296-800-35002 Types of workplace inspections.

• WISHA conducts the following types of inspections:

– **Programmed inspections** of hazardous workplaces.

WISHA identifies hazardous workplaces using objective criteria and inspection-scheduling systems that may look at any of the following factors:

❖ Type of industry

❖ Available data of injuries and illnesses where an inspection might eliminate the hazards causing them

❖ Employer's industrial insurance experience

❖ Number, type, and toxicity of contaminants in the workplace

❖ Degree of exposure to hazards

❖ Number of employees exposed

❖ Other factors, such as history of employee complaints

WISHA periodically reviews the scheduling systems and may adjust the factors used and/or the weight given to each factor

– **Routine programmed inspections** in the following high hazard industries:

❖ Agriculture

❖ Asbestos renovation and demolition

❖ Construction

❖ Electrical utilities and communications

❖ Logging

❖ Maritime

– **Unprogrammed inspections** of workplaces that may be in violation of WISHA safety or health rules or chapter 49.17 RCW, the Washington Industrial Safety and Health Act. Unprogrammed inspections may result because of:

❖ Complaints from employees, former employees, or employee representatives who believe they have been exposed to a hazard because of a violation

❖ Referrals from anyone who reasonably believes that workers under WISHA jurisdiction are being or have been exposed to a hazard because of a violation

– **Workplace deaths and serious injuries or illnesses investigations** to determine if they were caused by a violation of safety and health rules or chapter 49.17 RCW, the Washington Industrial Safety and Health Act. WISHA may also initiate comprehensive inspections based on such investigations

– **Imminent danger of serious injury or death inspections** when there is a reason to believe that employees may be in imminent danger of serious injury or death

– **Follow-up inspections** at later dates to verify that you have corrected any hazards identified in a citation

[Statutory Authority: RCW 49.17.010, [49.17].040, and [49.17].050. 01-11-038, § 296-800-35002, filed 5/9/01, effective 9/1/01.]

WAC 296-800-35004 Scheduling inspections.

• WISHA distributes staff performing inspections as efficiently as possible to ensure maximum protection for workers.

[Statutory Authority: RCW 49.17.010, [49.17].040, and [49.17].050. 01-11-038, § 296-800-35004, filed 5/9/01, effective 9/1/01.]

WAC 296-800-35006 Inspection techniques.

• During an inspection, WISHA staff may:

– Take samples, photographs, videotapes, or audiotapes

– Conduct tests

– Ask employees to wear sampling devices

– Conduct interviews

– Privately question, on or off the worksite, any:

❖ Employer

❖ Employer representative

❖ Owner

❖ Operator

❖ Employee

❖ Employee representative

– Employ any other reasonable investigative techniques

[Statutory Authority: RCW 49.17.010, [49.17].040, and [49.17].050. 01-11-038, § 296-800-35006, filed 5/9/01, effective 9/1/01.]

WAC 296-800-35008 Response to complaints submitted by employees or their representatives.

• When an employee or their representative has filed a complaint, WISHA will:

– Remove the name of the person submitting the complaint and the names of any employees identified in the complaint before giving a copy of the complaint to an employer, unless the person filing the complaint gives WISHA written permission to release the names involved

– Give a copy of the citation and notice to the employee (or their representative) who submitted the complaint, or explain to them why an inspection was not conducted

– Review any department decision refusing to inspect or cite violations alleged in a complaint, if requested in writing

– Notify the person in writing of the review results. If the person requesting the review is not satisfied with the results, they may request a second review by the department

[Statutory Authority: RCW 49.17.010, [49.17].040, and [49.17].050. 01-11-038, § 296-800-35008, filed 5/9/01, effective 9/1/01.]

WAC 296-800-35010 Citations mailed after an inspection.

• After an inspection or an investigation, WISHA will mail a citation to you within 6 months following the inspection or investigation

• The citation will include

– A description of any violations found

– The amount and type of assessed penalties

– The length of time given to correct the violations

• If no violations are found, WISHA will normally send you a citation and notice indicating that no violations were found

Note:
- Copies of WISHA safety and health inspection reports can be requested. The request should be mailed to:
  DEPARTMENT OF LABOR AND INDUSTRIES
  PUBLIC DISCLOSURE UNIT
  P.O. BOX 44632
  OLYMPIA WA 98504-4632
- You can also contact your local labor and industries field office for information on requesting copies of inspection reports (see the resource section of this book).

[Statutory Authority: RCW 49.17.010, [49.17].040, and [49.17].050. 01-23-060, § 296-800-35010, filed 11/20/01, effective 12/1/01; 01-11-038, § 296-800-35010, filed 5/9/01, effective 9/1/01.]

WAC 296-800-35012 Employees (or their representatives) can request a citation and notice.

• Employees or their representatives may request copies of citation and notices issued to the employer

– Complete the Request for Copy of Citation and Notice form, and mail it to:

DEPARTMENT OF LABOR AND INDUSTRIES
STANDARDS AND INFORMATION
P.O. BOX 44638
OLYMPIA WA 98504-4638

Note:
- To obtain a copy of the Request for Copy of Citation and Notice form, call 360-902-5534, or contact your local labor and industries office (see the resource section for a complete list of the offices.)
- If you submit this form, you'll receive all citation and notices issued to that employer for the next 12 months.
  – When the department approves the request for a copy of a citation and notice, WISHA will indicate the date the application is approved, and the date it expires. Once approved, your application is valid for one year. Once expired, a one-year extension may be requested.
  – You can waive the one-year period when you make your initial request.
  – If more than one employee representative requests a copy of the same citation and notice, the department may decide which person will receive the copy of the citation and notice.
- The department can deny requests for copies of citation and notices if the person filing the request is not an employee representative.

[Statutory Authority: RCW 49.17.010, [49.17].040, and [49.17].050. 01-23-060, § 296-800-35012, filed 11/20/01, effective 12/1/01; 01-11-038, § 296-800-35012, filed 5/9/01, effective 9/1/01.]

WAC 296-800-35016 Posting a citation and notice and employee complaint information. You must:

• Immediately notify your employees of a citation and notice by posting them and/or any correspondence related to an employee complaint on the safety bulletin board for 3 working days, or until all violations have been corrected, whichever is longer.

• Use any other appropriate means to notify employees who cannot receive notices posted on the safety bulletin board; for example, a copy to authorized employee representatives or the safety committee, or copies sent electronically.

[Statutory Authority: RCW 49.17.010, [49.17].040, and [49.17].050. 01-11-038, § 296-800-35016, filed 5/9/01, effective 9/1/01.]

CIVIL PENALTIES FOR VIOLATING WISHA REQUIREMENTS

WAC 296-800-35018 Reasons to assess civil penalties.

• WISHA may assess civil penalties when a citation and notice is issued for any violation of health and safety rules, or statutes found during an inspection.

• WISHA will assess civil penalties:

– When a citation for a serious violation is issued.

– Under other circumstances specified by statute (such as RCW 49.17.180, 49.26.016, 49.17.177, 49.70.190).

• Civil penalties promote compliance, encouraging employers to correct violations before an inspection takes place and avoiding the risk of receiving a penalty assessment. Civil penalties help promote a level playing field for employers complying with the rules by assessing penalties for those who do not comply.

[Statutory Authority: RCW 49.17.010, [49.17].040, and [49.17].050. 01-11-038, § 296-800-35018, filed 5/9/01, effective 9/1/01.]

WAC 296-800-35020 Minimum penalties.

• The minimum penalty amounts assessed by WISHA are:

– $100 for any penalty

– $5,000 per violation for all willful violations

[Statutory Authority: RCW 49.17.010, [49.17].040, and [49.17].050. 01-11-038, § 296-800-35020, filed 5/9/01, effective 9/1/01.]

HOW CIVIL PENALTIES ARE CALCULATED

WAC 296-800-35022 Base penalty calculations—Severity and probability.

• Except for specific penalty amounts that are dictated by statute, WISHA calculates the base civil penalty for a violation by evaluating:

– The severity of the injury, illness, or disease that could result from the alleged hazard

– The probability that an injury, illness, or disease could occur as a result of the alleged hazard

[Statutory Authority: RCW 49.17.010, [49.17].040, and [49.17].050. 01-11-038, § 296-800-35022, filed 5/9/01, effective 9/1/01.]

WAC 296-800-35024 Severity rate determination.

• Severity describes how serious an injury, illness, or disease might be because of a hazardous condition. Severity ratings are based on the most serious injury, illness, or disease that could be reasonably expected to occur because of a hazardous condition (see Table 1).

• Severity ratings are expressed in whole numbers and range from 1 (lowest) to 6 (highest). A violation with a severity rating of 4, 5, or 6 is considered to be a serious violation.

Table 1: Severity Ratings

Severity	Most serious injury, illness, or disease likely to result in:
6	Death from injury, illness or disease; injuries involving permanent severe disability; chronic, irreversible illness.
5	Permanent disability of a limited or less severe nature, injuries or reversible illnesses resulting in hospitalization.
4	Injuries or temporary, reversible illnesses resulting in serious physical harm (but less than 5 or 6 above) and may require removal from exposure or supportive treatment without hospitalization for recovery.
3	Injuries or illness would probably not cause death or serious physical harm, but violations have at least major impact and an indirect relationship to serious injury, illness or disease. Violations could have direct and immediate relationship to safety and health of employees. No need for medical treatment beyond first aid.
2	Nonserious or general violations of minor impact, including violations that have an indirect relationship to nonserious injury, illness or disease. No injury, illness or disease without additional violations.
1	No injury, and not likely to result in injury in the presence of other violations.

[Statutory Authority: RCW 49.17.010, [49.17].040, and [49.17].050. 01-11-038, § 296-800-35024, filed 5/9/01, effective 9/1/01.]

WAC 296-800-35026 Probability rate determination.

• Probability refers to the likelihood of an injury, illness or disease occurring, and is expressed in whole numbers ranging from 1 (lowest) to 6 (highest). Probability does not change severity.

• When determining probability, WISHA considers the number of employees affected and other factors, depending on the situation. Other factors may include:

– Frequency of employee exposure

– Instances (number of times the same violation occurs in the workplace)

– How close an employee is to the hazard

– Weather and other working conditions

– Employee skill level

– Employee awareness of the hazard

– The pace, speed, and nature of the task or work

– Use of personal protective equipment

– Amount of exposure (for health violations)

– Other mitigating or contributing circumstances

[Statutory Authority: RCW 49.17.010, [49.17].040, and [49.17].050. 01-23-060, § 296-800-35026, filed 11/20/01, effective 12/1/01; 01-11-038, § 296-800-35026, filed 5/9/01, effective 9/1/01.]

WAC 296-800-35028 Determining the gravity of a violation.

• WISHA calculates most base penalties by assigning a weight to a violation. This weight is called "gravity." Gravity is calculated by multiplying a violation's severity by its probability. Expressed as a formula, gravity is:

Gravity = Severity x Probability

• Unless a particular rule establishes penalty amounts for specific violations, WISHA uses Table 2 to determine the dollar amount for each base penalty

Table 2: Penalty Amount Using Gravity

Gravity	Base Penalty
1	$100
2	$200
3	$300
4	$400
Gravity	**Base Penalty**
5	$500
6	$1000
8	$1500
9	$2000
10	$2500
12	$3000
15	$3500
16	$4000
18	$4500
20	$5000
24	$5500
25	$6000
30	$6500
36	$7000

[Statutory Authority: RCW 49.17.010, [49.17].040, and [49.17].050. 01-11-038, § 296-800-35028, filed 5/9/01, effective 9/1/01.]

WAC 296-800-35030 Base penalty adjustments.

• WISHA may adjust an employer's base penalty amount because of the good faith effort, size, and compliance history. No adjustments are made to penalty amounts specified by statute.

[Statutory Authority: RCW 49.17.010, [49.17].040, and [49.17].050. 02-16-047, § 296-800-35030, filed 8/1/02, effective 10/1/02; 01-23-060, § 296-800-35030, filed 11/20/01, effective 12/1/01; 01-11-038, § 296-800-35030, filed 5/9/01, effective 9/1/01.]

WAC 296-800-35032 Types of base penalty adjustments. Employer's Good Faith

• An employer's good faith effort (or lack of) may justify increasing or decreasing a base penalty. No single factor determines good faith. Good faith is a reflection of an employer's:

– Effort before an inspection to provide a safe and healthful workplace for employees

– Effort to comply with a standard they have violated

– Cooperation during an inspection that is measured by a desire to comply with the cited standard and immediately correct identified hazards

• WISHA uses Table 3 to adjust base penalty amounts because of good faith effort

Table 3: Good Faith Adjustments

Good Faith Rating	Adjustment to Base Penalty
Excellent	35% reduction
Good	20% reduction
Average	No adjustment
Poor	20% increase

Employer's Work Force Size

• WISHA may adjust base penalties due to the size of an employer's work force in the state of Washington by using Table 4:

Table 4: Size Adjustments

Number of Employees	Adjustment to Base Penalty
1-25	60% reduction
26-100	40% reduction
101-250	20% reduction
More than 250	No adjustment

Employer's Compliance History

• WISHA may adjust a base penalty based on an employer's history of safety and health violations in the state of Washington, using previous citations as well as injury and illness rates (see Table 5).

Table 5: History Adjustments

History Rating	Adjustment to Base Penalty
Good	10% reduction
Average	No adjustment
Poor	10% increase

[Statutory Authority: RCW 49.17.010, [49.17].040, and [49.17].050. 01-11-038, § 296-800-35032, filed 5/9/01, effective 9/1/01.]

WAC 296-800-35038 Minimum and maximum adjusted base penalty amounts.

• The maximum penalty for a violation other than repeat, willful, egregious or failure-to-abate is $7,000.

• The minimum adjusted base penalty for any violation carrying a penalty is $100.00.

[Statutory Authority: RCW 49.17.010, 49.17.040, 49.17.050, and 49.17.060. 03-18-090, § 296-800-35038, filed 9/2/03, effective 11/1/03. Statutory Authority: RCW 49.17.010, [49.17].040, and [49.17].050. 01-11-038, § 296-800-35038, filed 5/9/01, effective 9/1/01.]

WAC 296-800-35040 Reasons for increasing civil penalty amounts.

• WISHA may **increase** civil penalties by applying a multiplier to an adjusted base penalty. Multipliers may be applied for the following reasons:

Repeat violations:

A violation is a repeat violation if the employer has been cited one or more times previously for a substantially similar hazard.

• WISHA cites such violations if the final order for the previous citation was dated no more than three years prior to the employer committing the violation being cited.

• The adjusted base penalty will be multiplied by the total number of citations with violations involving similar hazards, including the current inspection.

• The maximum penalty cannot exceed $70,000 for each violation.

Willful violations:

A willful violation is a voluntary action done either with an intentional disregard of, or plain indifference to, the requirements of the applicable WISHA rule(s):

– For all willful violations, the adjusted base penalty will be multiplied by 10

– All willful violations will receive at least the statutory minimum penalty of $5,000

– The maximum penalty cannot exceed $70,000 for each violation

For example: When management is aware that employees are resistant to following specific WAC rule(s); employee resistance results in imminent danger situation or a serious violation; and management fails to make efforts that are effective in practice to overcome the resistance, then WISHA will presume that the failure constitutes voluntary action.

Egregious violations:

An egregious violation may be issued for exceptionally flagrant cases involving willful violations. In these cases, WISHA will issue a separate penalty for each instance of an employer failing to comply with a particular rule

Failure-to-abate violations:

A failure-to-abate violation occurs when an employer who has been cited for a WISHA violation, fails to correct the violation on time (certifying corrected violations is covered in WAC 296-800-35042 through 296-800-35052)

• Based on the facts at the time of reinspection, WISHA will:

– Multiply the adjusted base penalty by a factor of at least 5, but up to 10, based on the employer's effort to comply

– Multiply the adjusted base penalty by the number of calendar days past the correction date.

• The maximum penalty cannot exceed $7,000 per day for every day the violation is not corrected.

[Statutory Authority: RCW 49.17.010, 49.17.040, 49.17.050, and 49.17.060. 03-18-090, § 296-800-35040, filed 9/2/03, effective 11/1/03. Statutory Authority: RCW 49.17.010, [49.17].040, and [49.17].050. 02-16-047, § 296-800-35040, filed 8/1/02, effective 10/1/02; 01-23-060, § 296-800-35040, filed 11/20/01, effective 12/1/01; 01-11-038, § 296-800-35040, filed 5/9/01, effective 9/1/01.]

CERTIFY THAT VIOLATIONS HAVE BEEN ABATED

WAC 296-800-35042 Employers must certify that violations have been abated. You must:

• Certify within 10 calendar days following the correction date that you have abated each violation, unless the compliance officer indicates in your citation and notice that you have corrected the violations. Include the following:

– Your name and address

– The inspection number your written statement applies to

– The citation and item numbers your written statement applies to

– The date and method you used to abate each violation

– That you informed your affected employees and their representatives that each violation was corrected

– That the information you submitted is accurate

– Your signature or the signature of your authorized representative

[Statutory Authority: RCW 49.17.010, [49.17].040, and [49.17].050. 01-11-038, § 296-800-35042, filed 5/9/01, effective 9/1/01.]

WAC 296-800-35044 For willful, repeated, or serious violations, submit additional documentation. You must:

• Submit additional documentation for each willful or repeated violation supporting that abatement is completed. This documentation may include, but is not limited to:

– Evidence of the purchase, or repair, of equipment

– Photographic or video evidence of corrections

– Other written records

• Submit additional documentation for a serious violation, when required by the citation and notice.

[Statutory Authority: RCW 49.17.010, [49.17].040, and [49.17].050. 01-11-038, § 296-800-35044, filed 5/9/01, effective 9/1/01.]

WAC 296-800-35046 Submitting correction action plans. You must:

• Submit a correction action plan within 25 calendar days from the final order date if the Citation and Notice requires it. Your plan must:

– Identify the violation

– List the steps you will take to correct the violation

– Include a schedule to complete the steps

– Describe how employees will be protected until the corrections are completed

Note:
- The department will notify you in writing if there is anything inadequate about your plan and will work out the problems.
- When determining if required documents are submitted on time, the department looks at the postmark date for documents sent by standard mail and the date received by other means, such as personal delivery or fax.

[Statutory Authority: RCW 49.17.010, [49.17].040, and [49.17].050. 01-11-038, § 296-800-35046, filed 5/9/01, effective 9/1/01.]

WAC 296-800-35048 Submit progress reports to the department when required. You must:

• Submit progress reports on the abatement if the citation and notice requires it and briefly state (a single sentence is normally adequate for each violation):

– The action taken to abate each violation

– The date each action was taken

Note: If progress reports are required, the citation and notice will include:
- The items for which periodic progress reports are required,
- The date when an initial progress report must be submitted (no sooner than 30 calendar days after you submit a correction plan),
- Whether additional progress reports are required.
- The date(s) on which additional progress reports must be submitted.

[Statutory Authority: RCW 49.17.010, [49.17].040, and [49.17].050. 01-23-060, § 296-800-35048, filed 11/20/01, effective 12/1/01; 01-11-038, § 296-800-35048, filed 5/9/01, effective 9/1/01.]

WAC 296-800-35049 WISHA determines the date by which abatement documents must be submitted.

• When determining if required documents are submitted on time, the department looks at:

– Date of postmark for documents sent by mail

– Date the department receives the documents, if transmitted by a means other than mail

[Statutory Authority: RCW 49.17.010, [49.17].040, and [49.17].050. 01-11-038, § 296-800-35049, filed 5/9/01, effective 9/1/01.]

WAC 296-800-35050 Inform affected employees and their representatives of abatement actions you have taken. You must:

• Post a copy of each abatement action document you submit to the department (or a summary) near the place where the violations occurred, if practical.

• Do the following if posting near the violation site is not practical, such as with a mobile work operation:

– Post each document (or a summary) in a location that is readily accessible by affected employees and their representatives

– Take other steps to fully communicate abatement actions to affected employees and their representatives

• Make sure that:

– Notice is given to your employees and their representatives on or before the date you submit abatement information to the department

– All abatement documents remain posted for at least 3 working days after they are submitted to the department

– All posted abatement documents are not altered, defaced, or covered by other materials

• Inform employees and their representatives of their right to examine and copy all abatement documents you submit to the department. If they ask to examine or copy your documents within 3 working days of receiving notice that you submitted them to the department, you have 5 days to comply with their request after receiving it.

[Statutory Authority: RCW 49.17.010, [49.17].040, and [49.17].050. 01-23-060, § 296-800-35050, filed 11/20/01, effective 12/1/01; 01-11-038, § 296-800-35050, filed 5/9/01, effective 9/1/01.]

WAC 296-800-35052 Tag cited moveable equipment to warn employees of a hazard.

You must:

• Tag cited moveable equipment to warn employees of a hazard if it has not been abated.

– Attach a warning tag or a copy of the citation to the equipment's operating controls or to the cited component:

– For hand-held equipment, tag it immediately after you receive a citation

– For other equipment, tag it before moving it within the worksite or between worksites

– The tag should properly warn employees about the nature of the violation and tell them where the citation is posted (see the Helpful Tools Section for a sample tag that can be used to meet this requirement)

• Make sure that the tag or copy of the citation attached to movable equipment is not altered, defaced, or covered by other materials

• Make sure that the tag or copy of the citation attached to movable equipment remains attached until:

– You have abated the violation and submitted all abatement certification documents required by the department

– You have permanently removed the cited equipment from service

– You no longer have control over the cited equipment

– A final order sets aside the violation

Note: Chapter 296-155 WAC, Safety Standards for Construction Work has information on warning tags. You can use warning tags that meet the requirements in those rules instead of the warning tags required by this rule.

[Statutory Authority: RCW 49.17.010, 49.17.040, 49.17.050, 49.17.060. 04-18-080, § 296-800-35052, filed 8/31/04, effective 11/1/04. Statutory Authority: RCW 49.17.010, [49.17].040, and [49.17].050. 01-11-038, § 296-800-35052, filed 5/9/01, effective 9/1/01.]

REQUESTING MORE TIME TO COMPLY

WAC 296-800-35056 You can request more time to comply.

• You can request more time to comply if you:

– Have made a good faith effort to comply with a citation's abatement requirements

– Have not completed your abatement because of factors beyond your control

• Requests for more time must:

– Be submitted in writing by you or your representative, and include:

– The name of your business

– The address of the workplace(s)

– Identification of the citation and the abatement date(s) you want extended

– The new abatement date and length of abatement period you are seeking

– A description of the actions you have taken to comply with the abatement date(s) in the citation

– Identification of the factors beyond your control that are preventing you from complying with the abatement date(s)

– The means you will use to protect your employees during the time you are abating the violation.

– Be received before midnight of the date you are asking to be extended

• The department may accept late requests if they are:

– Received within 5 days following the applicable correction date.

– Accompanied by your written statement explaining the exceptional circumstances that caused the delay.

• The assistant director may respond to a request received by telephone or personal conversation if the request is timely.

Note: The department does not accept late requests when compliance activity related to the abatement starts before the request is received.

• The department accepts requests by:

– First class mail postage prepaid. Mailed to:

Department of Labor and Industries
WISHA Appeals
P.O. Box 44604
Olympia, WA 98504-4604

– Personal delivery

– Fax: (360) 902-5581

[Statutory Authority: RCW 49.17.010, [49.17].040, and [49.17].050. 02-16-047, § 296-800-35056, filed 8/1/02, effective 10/1/02; 01-11-038, § 296-800-35056, filed 5/9/01, effective 9/1/01.]

WAC 296-800-35062 WISHA's response to your request for more time.

• Before making a decision, WISHA may conduct an investigation. Once made, the decision remains in effect unless a hearing is requested by the employee or employee representative.

• Unless you receive a response from the department granting your request for more time, the original abatement date will remain in effect.

Note: Although the department may grant more time to correct hazards at its discretion, an employee can appeal if an extension is granted.

[Statutory Authority: RCW 49.17.010, 49.17.040, 49.17.050, and 49.17.060. 03-18-090, § 296-800-35062, filed 9/2/03, effective 11/1/03. Statutory Authority: RCW 49.17.010, [49.17].040, and [49.17].050. 01-23-060, § 296-800-35062, filed 11/20/01, effective 12/1/01; 01-11-038, § 296-800-35062, filed 5/9/01, effective 9/1/01.]

WAC 296-800-35063 Post the department's response. You must:

• Post notices with the citation for which you are requesting additional abatement time immediately upon receipt. The notices must remain posted until:

– The abatement date has passed or

– A hearing notice is posted.

[Statutory Authority: RCW 49.17.010, [49.17].040, and [49.17].050. 01-11-038, § 296-800-35063, filed 5/9/01, effective 9/1/01.]

WAC 296-800-35064 A hearing can be requested about the department's response.

• The affected employees or their authorized representative may request a hearing if they disagree with the department's response to a request for more time to comply.

• All hearing requests must be sent or delivered to the assistant director and be received no later than 10 calendar days after the issue date of the notice.

• Upon receiving a hearing request, the assistant director will issue a notice of hearing to the requesting party and the employer at least 20 days before the hearing date. The hearing notice will:

– state that all interested parties can participate in the hearing

– set the time and date, including:

❖ The time, place, and nature of the proceeding

❖ The legal authority and jurisdiction under which the hearing will be held

❖ A reference to the particular sections of the statute and rules involved, and

❖ A short and clear explanation why a hearing was requested.

• The employer must post the department's hearing notice or a complete copy until the hearing is held. This includes the:

– Citation containing the correction date for which more time was requested.

[Statutory Authority: RCW 49.17.010, 49.17.040, 49.17.050, and 49.17.060. 03-18-090, § 296-800-35064, filed 9/2/03, effective 11/1/03. Statutory Authority: RCW 49.17.010, [49.17].040, and [49.17].050. 01-23-060, § 296-800-35064, filed 11/20/01, effective 12/1/01; 01-11-038, § 296-800-35064, filed 5/9/01, effective 9/1/01.]

WAC 296-800-35065 Post the department's hearing notice. You must:

• Post the department's hearing notice or a complete copy until the hearing is held. This includes the:

– Citation containing the correction date for which more time was requested

– Department notices issued in response to the employer's request for more time

[Statutory Authority: RCW 49.17.010, [49.17].040, and [49.17].050. 01-11-038, § 296-800-35065, filed 5/9/01, effective 9/1/01.]

WAC 296-800-35066 Hearing procedures.

• The assistant director for WISHA services will appoint someone from the department to act as a hearings officer.

• The hearings officer must be present at, and conduct, the hearing. An assistant attorney general may be present to give legal advice to the hearings officer.

• If the hearings officer requests, the assistant attorney general may conduct the hearing.

• The hearings officer may discuss the material to be presented to determine how the hearing will proceed.

• The hearing must be conducted according to the Administrative Procedure Act. Copies of hearing transcripts will be available to the parties, at cost, upon request.

[Statutory Authority: RCW 49.17.010, [49.17].040, and [49.17].050. 01-23-060, § 296-800-35066, filed 11/20/01, effective 12/1/01; 01-11-038, § 296-800-35066, filed 5/9/01, effective 9/1/01.]

WAC 296-800-35072 Post the hearing decision.

• After the hearing, the assistant director will issue an order:

– Affirming or modifying the correction date that caused the hearing

AND

– Complying with the provisions of the Administrative Procedure Act, chapter 34.05 RCW and the Practice and Procedure Rules, chapter 296-08 WAC.

You must:

• Post a complete, unedited copy of this decision, along with the citation to which it applies, as soon as it is received.

[Statutory Authority: RCW 49.17.010, [49.17].040, and [49.17].050. 01-11-038, § 296-800-35072, filed 5/9/01, effective 9/1/01.]

REQUESTING AN APPEAL OF WISHA CITATIONS AND CORRECTIVE NOTICES

WAC 296-800-35076 Employers and employees can request an appeal of a citation and notice.

EMPLOYER REQUESTS

• Any employer cited for a violation of WISHA safety and health rules may appeal a citation or corrective notice.

• Your request must include:

– Business name, address, telephone number; and the name, address and telephone number of any person representing you.

– Citation number.

– What you think is wrong with the citation or corrective notice and any related facts.

– What you think should be changed, and why.

EMPLOYEE REQUESTS

• Any employee or employee representative who could be affected by a citation or its correction may appeal the abatement date in the citation or corrective notice.

• Your request must include:

– Your name, address, telephone number, and the name, address and telephone number of any person representing you

– Citation number

– What you think is wrong with the abatement date

SUBMITTING APPEAL REQUESTS

• All appeal requests must be in writing and submitted to the department within 15 working days after receiving the citation corrective notice. If you mail your request, the postmark is considered the submission date.

• All requests must be:

– Mailed to:

Department of Labor and Industries
WISHA Appeals
P.O. Box 44604
Olympia, WA 98504-4604

or

– Faxed to: (360) 902-5581

or

– Brought to any department service location.

[Statutory Authority: RCW 49.17.010, [49.17].040, and [49.17].050. 02-16-047, § 296-800-35076, filed 8/1/02, effective 10/1/02; 01-11-038, § 296-800-35076, filed 5/9/01, effective 9/1/01.]

WAC 296-800-35078 Await the department's response to your appeal request.

• When an appeal request is received, the department decides whether to reassume jurisdiction over the citation and notice being appealed or forward the appeal to the Board of Industrial Insurance Appeals. The department will notify the person who submitted the appeal when the department reassumes jurisdiction.

Definition: Reassume jurisdiction means that the department has decided to hear the appeal.

• The department may reassume jurisdiction to:

– Provide an employer and affected employees an opportunity to present relevant information, facts, and opinions during an informal conference

– Give an employer, affected employees and the department an opportunity to resolve appeals rapidly and without further contest, especially in routine compliance cases

– Educate employers about the citation and notice, the WISHA appeals process, and WISHA compliance

– Review citations, penalties, and correction dates for fairness and accuracy to ensure quality work by the department

• If the department does not reassume jurisdiction, it will send the appeal to the Board of Industrial Insurance Appeals. The board will send the person submitting the appeal a notice with the time and location of any board proceedings.

[Statutory Authority: RCW 49.17.010, [49.17].040, and [49.17].050. 01-11-038, § 296-800-35078, filed 5/9/01, effective 9/1/01.]

WAC 296-800-35080 Department actions when reassuming jurisdiction over an appeal.

• The department has 30 working days after receipt of the appeal to review it, gather more information and decide whether to make changes to the citation and notice. The 30 working days begin with the first working day after the appeal is received. For example, if an appeal is received on Friday, the 30 days will begin on the following Monday unless it is a state holiday.

• The department may extend the appeal review period up to an additional 15 working days if everyone involved agrees to the extension.

• During the review period, the department will hold an informal conference about the appeal.

– An informal conference is not an evidentiary hearing. It is an opportunity for interested parties to briefly explain their positions and provide any additional information they would like the department to consider when reviewing the citation and notice.

– Although informal, the conference is an official conference and the department may record all or part of it. The department will tell participants when the conference will be recorded.

• After the review period, the department will issue a corrective notice reflecting any changes made to the citation and notice. This notice will be sent to the employer and any employee representatives participating in the appeal process.

[Statutory Authority: RCW 49.17.010, [49.17].040, and [49.17].050. 01-11-038, § 296-800-35080, filed 5/9/01, effective 9/1/01.]

WAC 296-800-35082 Appealing a corrective notice.

• Anyone who can appeal a citation and notice may appeal a corrective notice. All corrective notice appeals must be submitted within 15 working days after the notice was received.

[Statutory Authority: RCW 49.17.010, [49.17].040, and [49.17].050. 01-11-038, § 296-800-35082, filed 5/9/01, effective 9/1/01.]

WAC 296-800-35084 Notify employees. You must:

• Immediately post all correspondence from the department in a conspicuous place after submitting an appeal. This correspondence includes:

– The notice of appeal

– The notice explaining that the department reassumed jurisdiction over the citation and notice

– Any extensions to the review period

– The notice for an informal conference

– Corrective notices

• Post all notices and information related to the appeal in the place where WISHA citations and notices are posted (see WAC 296-800-35050). These include:

– A notice of appeal until the appeal is resolved

– Notices about the department reassuming jurisdiction and any extension of the review period until the end of review period

– A notice of an informal conference until after the conference is held

– Corrective notices for as long as citations and notices must be posted

– Requesting alternate means of compliance with WISHA rules.

Note: If you wish to develop an alternate means of compliance with WISHA rules, you may do so by following the instructions in WAC 296-350-700, Variances from WISHA rules.

• In certain circumstances, the department allows an employer to vary from a specific WISHA safety and health standard if the employer uses department-approved substitute measures to protect employees. The substitute measure must provide at least the same protection from workplace hazards as provided by the WISHA standard.

[Statutory Authority: RCW 49.17.010, [49.17].040, and [49.17].050. 01-23-060, § 296-800-35084, filed 11/20/01, effective 12/1/01; 01-11-038, § 296-800-35084, filed 5/9/01, effective 9/1/01.]

USING STANDARDS FROM NATIONAL ORGANIZATIONS AND FEDERAL AGENCIES

WAC 296-800-360 Rule. Your responsibility: To use the safety and health standards from national organizations and federal agencies, when directed to by WISHA rules.

[Statutory Authority: RCW 49.17.010, [49.17].040, and [49.17].050. 01-11-038, § 296-800-360, filed 5/9/01, effective 9/1/01.]

WAC 296-800-36005 Comply with standards national organizations or of federal agencies when referenced in WISHA rules. You must:

• Use the following to be in compliance with WISHA rules:

– The edition of the standard specified in the WISHA rule or

– Any edition published after the edition specified in the WISHA rule.

Note: The specific standards referenced in the WISHA rules are available:

• For review at your local department of labor and industries office.

• See http://www.wa.gov/lni/pa/direct.htm

• Through the local library system

• Through the issuing organization.

[Statutory Authority: RCW 49.17.010, [49.17].040, and [49.17].050. 01-11-038, § 296-800-36005, filed 5/9/01, effective 9/1/01.]

WAC 296-800-370 Definitions.

Abatement Action Plans

Refers to your written plans for correcting a WISHA violation.

Abatement date

The date on the citation when you must comply with specific safety and health standards listed on the citation and notice of assessment or the corrective notice of redetermination.

Acceptable

As used in **Electrical, WAC 296-800-280** means an installation or equipment is acceptable to the director of labor and industries, and approved:

• If it is accepted, or certified, or listed, or labeled, or otherwise determined to be safe by a nationally recognized testing laboratory; or

• With respect to an installation or equipment of a kind which no nationally recognized testing laboratory accepts, certifies, lists, labels, or determines to be safe, if it is inspected or tested by another federal agency, or by a state, municipal, or other local authority responsible for enforcing occupational safety provisions of the National Electrical Code, and found in compliance with the provisions of the National Electrical Code as applied in this section;

OR

• With respect to custom-made equipment or related installations which are designed, fabricated for, and intended for use by a particular customer, if it is determined to be safe for its intended use by its manufacturer on the basis of test data which the employer keeps and makes available for inspection to the director and his/her authorized representatives. Refer to federal regulation 29 CFR 1910.7 for definition of nationally recognized testing laboratory.

Accepted

As used in Electrical, WAC 296-800-280 means an installation is accepted if it has been inspected and found by a nationally recognized testing laboratory to conform to specified plans or to procedures of applicable codes.

Access

As used in material safety data sheets (MSDSs) as Exposure Records, WAC 296-800-180 means the right and opportunity to examine and copy exposure records.

Affected employees

As used in WISHA appeals, penalties and other procedural rules, WAC 296-800-350 means employees exposed to hazards identified as violations in a citation.

Analysis using exposure or medical records

• An analysis using exposure records or medical records can be any collection of data or a statistical study. It can be based on either:

– Partial or complete information from individual employee exposure or medical records or

– Information collected from health insurance claim records

• The analysis is not final until it has been:

– Reported to the employer or

– Completed by the person responsible for the analysis

ANSI

This is an acronym for the American National Standards Institute.

Approved means:

• Approved by the director of the department of labor and industries or their authorized representative, or by an organization that is specifically named in a rule, such as Underwriters' Laboratories (UL), Mine Safety and Health Administration (MSHA), or the National Institute for Occupational Safety and Health (NIOSH).

• As used in Electrical, WAC 296-800-280 means acceptable to the authority enforcing this section. The authority enforcing this section is the director of labor and industries. The definition of acceptable indicates what is acceptable to the director and therefore approved.

Assistant director

The assistant director for the WISHA services division at the department of labor and industries or his/her designated representative.

ASTM

This is an acronym for American Society for Testing and Materials.

Attachment plug or plug

As used in the basic electrical rules, WAC 296-800-280 means the attachment at the end of a flexible cord or cable that is part of a piece of electrical equipment. When it is inserted into an outlet or receptacle, it connects the conductors supplying electrical power from the outlet to the flexible cable.

Bare conductor

A conductor that does not have any covering or insulation.

Bathroom

A room maintained within or on the premises of any place of employment, containing toilets that flush for use by employees.

Biological agents

Organisms or their by-products.

Board

As used in WISHA appeals, penalties and other procedural rules, WAC 296-800-350 means the board of industrial insurance appeals.

Ceiling

An exposure limit that must not be exceeded during any part of the employee's workday. The ceiling must be determined over the shortest time period feasible and should not exceed fifteen minutes.

Certification

As used in WISHA appeals, penalties and other procedural rules, WAC 296-800-350 means refers to an employer's written statement describing when and how a citation violation was corrected.

CFR

This is an acronym for Code of Federal Regulations.

Chemical

Any element, chemical compound, or mixture of elements and/or compounds.

Chemical agents (airborne or contact)

A chemical agent is any of the following:

• Airborne chemical agent which is any of the following:

– Dust - solid particles suspended in air, that are created by actions such as:

• Handling.

• Drilling.

• Crushing.

• Grinding.

• Rapid impact.

• Detonation.

• Decrepitation of organic or inorganic materials such as rock, ore, metal, coal, wood, and grain.

– Fume - solid particles suspended in air, that are created by condensation from the gaseous state.

– Gas - a normally formless fluid, such as air, which can be changed to the liquid or solid state by the effect of increased pressure or decreased temperature or both.

– Mist - liquid droplets suspended in air. Mist is created by:

• Condensation from the gaseous to the liquid state;

OR

• Converting a liquid into a dispersed state with actions such as splashing, foaming, spraying or atomizing.

– Vapor - the gaseous form of a substance that is normally in the solid or liquid state.

• Contact chemical agent which is any of the following:

– Corrosive - a substance that, upon contact, causes destruction of living tissue by chemical action, including acids with a pH of 2.5 or below or caustics with a pH of 11.0 or above.

– Irritant - a substance that will induce a local inflammatory reaction upon immediate, prolonged, or repeated contact with normal living tissue.

– Toxicant - a substance that has the inherent capacity to produce personal injury or illness to individuals by absorption through any body surface.

Chemical manufacturer

An employer with a workplace where one or more chemicals are produced for use or distribution.

Chemical name

The scientific designation of a chemical in accordance with one of the following:

• The nomenclature system developed by the International Union of Pure and Applied Chemistry (IUPAC)

• The Chemical Abstracts Service (CAS) rules of nomenclature

• A name which will clearly identify the chemical for the purpose of conducting a hazard evaluation.

Circuit breaker

• Is a device used to manually open or close a circuit. This device will also open the circuit automatically and without damage to the breaker when a predetermined overcurrent is applied. (600 volts nominal or less)

• Is a switching device capable of making, carrying, and breaking currents under normal circuit conditions, and also making, carrying for a specified time, and breaking currents under specified abnormal circuit conditions, such as those of short circuit. (Over 600 volts nominal)

Citation

Refers to the citation and notice issued to an employer for any violation of WISHA safety and health rules. A citation and notice may be referred to as a citation and notice of assessment but is more commonly referred to as a citation.

Combustible liquid

A combustible liquid has a flashpoint of at least 100°F (37.8°C) and below 200°F (93.3°C). Mixtures with at least 99% of their components having flashpoints of 200°F (93.3°C) or higher are not considered combustible liquids.

Commercial account

As used in Employer Chemical Hazard Communication, WAC 296-800-170 means an arrangement in which a retail distributor sells hazardous chemical(s) to an employer, generally in large quantities over time, and/or at costs that are below the regular retail price.

Common name

As used in Employer Chemical Hazard Communication, WAC 296-800-170 means any designation or identification such as:

• Code name

• Code number

• Trade name

• Brand name

• Generic name used to identify a chemical other than by its chemical name.

Compressed gas

A gas or mixture of gases that, when in a container, has an absolute pressure exceeding:

• 40 psi at 70°F (21.1°C)

OR

• 104 psi at 130°F (54.4°C) regardless of the pressure at 70°F (21.1°C)

Compressed gas can also mean a liquid with a vapor pressure that exceeds 40 psi at 100°F (37.8°C)

Conductor

A wire that transfers electric power.

Container

As used in Employer Chemical Hazard Communication, WAC 296-800-170 means any container, except for pipes or piping systems, that contains a hazardous chemical. It can be any of the following:

• Bag
• Barrel
• Bottle
• Box
• Can
• Cylinder
• Drum
• Reaction vessel
• Storage tank

Correction date

The date by which a violation must be corrected. Final orders or extensions that give additional time to make corrections establish correction dates. A correction date established by an order of the board of industrial insurance appeals remains in effect during any court appeal unless the court suspends the date.

Corrective notice

Refers to a notice changing a citation and is issued by the department after a citation has been appealed.

Corrosive

A substance that, upon contact, causes destruction of living tissue by chemical action, including acids with a pH of 2.5 or below or caustics with a pH of 11.0 or above.

Covered conductor

A conductor that is covered by something else besides electrical insulation.

Damp location

As used in basic electrical rules, WAC 296-800-280 means partially protected areas that are exposed to moderate moisture. Outdoor examples include roofed open porches and marquees. Interior examples include basements and barns.

Department

Those portions of the department of labor and industries responsible for enforcing the Washington Industrial Safety Act (WISHA).

Designated representative

• Any individual or organization to which an employee gives written authorization.

• A recognized or certified collective bargaining agent without regard to written authorization.

• The legal representative of a deceased or legally incapacitated employee.

Director

The director means the director of the department of labor and industries or their designee.

Distributor

A business, other than a chemical manufacturer or importer, that supplies hazardous chemicals to other distributors or to employers.

Documentation

As used in WISHA appeals, penalties and other procedural rules, WAC 296-800-350 means material that you submit to prove that a correction is completed. Documentation includes, but is not limited to, photographs, receipts for materials and/or labor.

Dry location

As used in basic electrical rules, WAC 296-800-280 means areas not normally subjected to damp or wet conditions. Dry locations may become temporarily damp or wet, such as when constructing a building.

Dust

Solid particles suspended in air that are created by actions such as:

• Handling.
• Drilling.
• Crushing.
• Grinding.
• Rapid impact.
• Detonation.
• Decrepitation of organic or inorganic materials such as rock, ore, metal, coal, wood, and grain.

Emergency washing facilities

Emergency washing facilities are emergency showers, eyewashes, eye/face washes, hand-held drench hoses, or other similar units.

Electrical outlets

Places on an electric circuit where power is supplied to equipment through receptacles, sockets, and outlets for attachment plugs.

Employee

Based on chapter 49.17 RCW, the term employee and other terms of like meaning, unless the context of the provision containing such term indicates otherwise, means an employee of an employer who is employed in the business of his or her employer whether by way of manual labor or otherwise and every person in this state who is engaged in the employment of or who is working under an independent contract the essence of which is personal labor for an employer under this standard whether by way of manual labor or otherwise.

Employee exposure record

As used in material safety data sheets (MSDSs) as exposure records, WAC 296-800-180 means a record containing any of the following kinds of information:

• Environmental (workplace) monitoring or measuring of a toxic substance or harmful physical agent, including personal, area, grab, wipe, or other form of sampling, as well as related collection and analytical methodologies, calculations, and other background data relevant to interpretation of the results obtained;

• Biological monitoring results which directly assess the absorption of a toxic substance or harmful physical agent by body systems (e.g., the level of a chemical in the blood, urine, breath, hair, fingernails, etc.) but not including results which assess the biological effect of a substance or agent or which assess an employee's use of alcohol or drugs;

• Material safety data sheets indicating that the material may pose a hazard to human health;

OR

• In the absence of the above, a chemical inventory or any other record which reveals where and when used and the identity (e.g., chemical, common or trade name) of a toxic substance or harmful physical agent.

Employer

Based on chapter 49.17 RCW, an employer is any person, firm, corporation, partnership, business trust, legal representative, or other business entity which engages in any business, industry, profession, or activity in this state and employs one or more employees or who contracts with one or more persons, the essence of which is the personal labor of such person or persons and includes the state, counties, cities,

and all municipal corporations, public corporations, political subdivisions of the state, and charitable organizations: Provided, That any persons, partnership, or business entity not having employees, and who is covered by the Industrial Insurance Act must be considered both an employer and an employee.

Exit

Provides a way of travel out of the workplace.

Exit route

A continuous and unobstructed path of exit travel from any point within a workplace to safety outside.

Explosive

A chemical that causes a sudden, almost instant release of pressure, gas, and heat when exposed to a sudden shock, pressure, or high temperature.

Exposed live parts

Electrical parts that are:

• Not suitably guarded, isolated, or insulated

AND

• Capable of being accidentally touched or approached closer than a safe distance.

Exposed wiring methods

Involve working with electrical wires that are attached to surfaces or behind panels designed to allow access to the wires.

Exposure or exposed

As used in employer chemical hazard communication, WAC 296-800-170 and material safety data sheets (MSDSs) as exposure records, WAC 296-800-180. An employee has been, or may have possibly been, subjected to a hazardous chemical, toxic substance or harmful physical agent while working. An employee could have been exposed to hazardous chemicals, toxic substances, or harmful physical agents in any of the following ways:

• Inhalation
• Ingestion
• Skin contact
• Absorption
• Related means.

The terms exposure and exposed only cover workplace exposure involving a toxic substance or harmful physical agent in the workplace different from typical nonoccupational situations in the way it is:

• Used
• Handled
• Stored
• Generated
• Present

Exposure record

See definition for employee exposure record.

Extension ladder

A portable ladder with 2 or more sections and is not self-supporting. The 2 or more sections travel in guides or brackets that let you change the length. The size of a portable ladder is determined by adding together the length of each section.

Failure-to-abate

Any violation(s) resulting from not complying with an abatement date.

Final order

Any of the following (unless an employer or other party files a timely appeal):

• Citation and notice;
• Corrective notice;
• Decision and order from the board of industrial insurance appeals;
• Denial of petition for review from the board of industrial insurance appeals; or
• Decision from a Washington State superior court, court of appeals, or the state supreme court.

Final order date

The date a final order is issued.

First aid

The extent of treatment you would expect from a person trained in basic first aid, using supplies from a first-aid kit.

Tests, such as X rays, must not be confused with treatment.

Flammable

A chemical covered by one of the following categories:

• Aerosol flammable means an aerosol that, when tested by the method described in 16 CFR 1500.45 yields either a flame projection more than 18 inches at full valve opening or a flashback (a flame extending back to the valve) at any degree of valve opening;

• Gas, flammable means:

– A gas that, at temperature and pressure of the surrounding area, forms a flammable mixture with air at a concentration of 13% by volume or less or

– A gas that, at temperature and pressure of the surrounding area, forms a range of flammable mixtures with air wider than 12% by volume, regardless of the lower limit.

• Liquid, flammable means any liquid having a flashpoint below 100°F (37.8°C), except any mixture having components with flashpoints of 100°F (37.8°C) or higher, the total of which make up 99% or more of the total volume of the mixture.

• Solid, flammable means a solid, other than a blasting agent or explosive as defined in 29 CFR 1910.109(a), that is likely to cause fire through friction, moisture absorption, spontaneous chemical change, or retained heat from manufacturing or processing, or which can be ignited readily. Solid, inflammable also means that when the substance is ignited, it burns so powerfully and persistently that it creates a serious hazard. A chemical must be considered to be a flammable solid if, when tested by the method described in 16 CFR 1500.44, it ignites and burns with a self-sustained flame at a rate greater than one-tenth of an inch per second along its major axis.

Flashpoint

• The minimum temperature at which a liquid gives off a vapor in sufficient concentration to ignite when tested by any of the following measurement methods:

– Tagliabue closed tester: (See American National Standard Method of Test for Flash Point by Tag Closed Tester, Z11.24-1979 (ASTM D 56-79)) for liquids with a viscosity of less than 45 Saybolt Universal Seconds (SUS) at 100°F (37.8°C), that do not contain suspended solids and do not have a tendency to form a surface film under test; or

– Pensky-Martens closed tester: (See American National Standard Method of Test for Flash Point by Pensky-

Martens Closed Tester, Z11.7-1979 (ASTM D 93-79)) for liquids with a viscosity equal to or greater than 45 SUS at 100°F (37.8°C), or that contain suspended solids, or that have a tendency to form a surface film under test; or

– Setaflash closed tester: (See American National Standard Method of Test for Flash Point by Setaflash Closed Tester (ASTM D 3278-78).)

Note: Organic peroxides, which undergo auto accelerating thermal decomposition, are excluded from any of the flashpoint measurement methods specified above.

Flexible cords and cables

Typically used to connect electrical equipment to an outlet or receptacle. These cords can have an attachment plug to connect to a power source or can be permanently wired into the power source. Flexible cords, extension cords, cables and electrical cords are all examples of flexible cord.

Floor hole

An opening in any floor, platform, pavement, or yard that measures at least one inch but less than 12 inches at its smallest dimension and through which materials and tools (but not people) can fall.

Examples of floor holes are:

• Belt holes
• Pipe openings
• Slot openings

Floor opening

An opening in any floor, platform, pavement, or yard that measures at least 12 inches in its smallest dimension and through which a person can fall.

Examples of floor openings are:

• Hatchways
• Stair or ladder openings
• Pits
• Large manholes

The following are NOT considered floor openings:

• Openings occupied by elevators
• Dumbwaiters
• Conveyors
• Machinery
• Containers

Foreseeable emergency

As used in Employer Chemical Hazard Communication, WAC 296-800-170 means any potential event that could result in an uncontrolled release of a hazardous chemical into the workplace. Examples of foreseeable emergencies include equipment failure, rupture of containers, or failure of control equipment.

Fume

Solid particles suspended in air that are created by condensation from the gaseous state.

Gas

A normally formless fluid, such as air, which can be changed to the liquid or solid state by the effect of increased pressure or decreased temperature or both.

Ground

As used in Electrical, WAC 296-800-280, a connection between an electrical circuit or equipment and the earth or other conducting body besides the earth. This connection can be intentional or accidental.

Grounded

A connection has been made between an electrical circuit or equipment and the earth or another conducting body besides the earth.

Grounded conductor

A system or circuit conductor that is intentionally grounded.

Ground-fault circuit-interrupter

A device whose function is to interrupt the electric circuit to the load when a fault current to ground exceeds some predetermined value that is less than that required to operate the overcurrent protective device of the supply circuit.

Grounding conductor

Is used to connect equipment or the grounded circuit of a wiring system to a grounding electrode or electrodes.

Grounding conductor, equipment

A conductor used to connect noncurrent-carrying metal parts of equipment, raceways, and other enclosures to the system grounded conductor and/or the grounding electrode conductor at the service equipment or at the source of a separately derived system.

Guarded

Covered, shielded, fenced, enclosed, or otherwise protected by means of suitable covers, casings, barriers, rails, screens, mats, or platforms to remove the likelihood of being accidentally touched or approached closer than a safe distance.

Hand-held drench hoses

Hand-held drench hoses are single-headed emergency washing devices connected to a flexible hose that can be used to irrigate and flush the face or other body parts.

Handrail

A single bar or pipe supported on brackets from a wall or partition to provide a continuous handhold for persons using a stair.

Harmful physical agent

Any physical stress such as noise, vibration, repetitive motion, heat, cold, ionizing and nonionizing radiation, and hypo- or hyperbaric pressure which:

• Is listed in the latest edition of the National Institute for Occupational Safety and Health (NIOSH) *Registry of Toxic Effects of Chemical Substances* (RTECS); or

• Has shown positive evidence of an acute or chronic health hazard in testing conducted by, or known to, the employer;

OR

• Is the subject of a material safety data sheet kept by or known to the employer showing that the material may pose a hazard to human health.

Hazard

Any condition, potential or inherent, which can cause injury, death, or occupational disease.

Hazard warning

As used in Employer Chemical Hazard Communication, WAC 296-800-170 can be a combination of words, pictures, symbols, or combination appearing on a label or other appropriate form of warning which shows the specific physical and health hazard(s), including target organ effects, of the chemical(s) in the container(s).

Note: See definition for physical hazard and health hazard to determine which hazards must be covered.

Hazardous chemical

Any chemical that is a physical or health hazard.

Health hazard

A chemical, mixture, biological agent, or physical agent that may cause health effects in short- or long-term exposed employees. Based on statistically significant evidence from at least one study conducted using established scientific principles. Health hazards include:

• Carcinogens
• Toxic or highly toxic agents
• Reproductive toxins
• Irritants
• Corrosives
• Sensitizers
• Hepatotoxins (liver toxins)
• Nephrotoxins (kidney toxins)
• Neurotoxins (nervous system toxins)
• Substances that act on the hematopoietic system (blood or blood-forming system)
• Substances that can damage the lungs, skin, eyes, or mucous membranes
• Hot or cold conditions.

Hospitalization

To be sent to, to go to, or be admitted to, a hospital or an equivalent medical facility and receive medical treatment beyond first-aid treatment, regardless of the length of stay in the hospital or medical facility.

Identity

As used in Employer Chemical Hazard Communication, WAC 296-800-170 means any chemical or common name listed on the material safety data sheet (MSDS) for the specific chemical. Each identity used must allow cross-references among the:

• Required list of hazardous chemicals
• Chemical label
• MSDSs

Imminent danger violation

Any violation(s) resulting from conditions or practices in any place of employment, which are such that a danger exists which could reasonably be expected to cause death or serious physical harm, immediately or before such danger can be eliminated through the enforcement procedures otherwise provided by the Washington Industrial Safety and Health Act.

Importer

The first business within the Customs Territory of the USA that:

• Receives hazardous chemicals produced in other countries

AND

• Supplies them to distributors or employers within the USA

Insulated

A conductor has been completely covered by a material that is recognized as electrical insulation and is thick enough based on:

• The amount of voltage involved

AND

• The type of covering material

Interim waiver

An order granted by the department allowing an employer to vary from WISHA requirements until the department decides to grant a permanent or temporary waiver.

Irritant

A substance that will induce a local inflammatory reaction upon immediate, prolonged, or repeated contact with normal living tissue.

Ladder

Consists of 2 side rails joined at regular intervals by crosspieces called steps, rungs, or cleats. These steps are used to climb up or down.

Listed

Equipment is listed if it:

• Is listed in a publication by a nationally recognized laboratory (such as UL, underwriters laboratory) that inspects the production of that type of equipment,

AND

• States the equipment meets nationally recognized standards or has been tested and found safe to use in a specific manner.

Material safety data sheet (MSDS)

Written, printed, or electronic information (on paper, microfiche, or on-screen) that informs manufacturers, distributors, employers or employees about a hazardous chemical, its hazards, and protective measures as required by material safety data sheet and label preparation, chapter 296-839 WAC.

Medical treatment

Treatment provided by a physician or by registered professional personnel under the standing orders of a physician. Medical treatment does not include first-aid treatment even if provided by a physician or registered professional personnel.

Mist

Liquid droplets suspended in air. Mist is created by:

• Condensation from the gaseous to the liquid state;

OR

• Converting a liquid into a dispersed state with actions such as splashing, foaming, spraying or atomizing.

Mixture

As used in Employer Chemical Hazard Communication, WAC 296-800-170, any combination of 2 or more chemicals (if that combination did not result from a chemical reaction).

Movable equipment

As used in WAC 296-800-35052, a hand-held or non-hand-held machine or device;

• That is powered or nonpowered;

AND

• Can be moved within or between worksites

Must

Must means mandatory.

NEMA

These initials stand for National Electrical Manufacturing Association.

NFPA

This is an acronym for National Fire Protection Association.

Nose

The portion of the stair tread that projects over the face of the riser below it.

Occupational Safety and Health Administration (OSHA)

Created in 1970 when the U.S. Congress passed the Occupational Safety and Health Act, the Occupational Safety and Health Administration (OSHA) provides safety on the job for workers. OSHA oversees state plans (such as WISHA in Washington) that have elected to administer the safety and health program for their state. OSHA requires WISHA rules to be at least as effective as OSHA rules.

Office work environment

An indoor or enclosed occupied space where clerical work, administration, or business is carried out.

In addition, it includes:

• Other workplace spaces controlled by the employer and used by office workers, such as cafeterias, meeting rooms, and washrooms.

• Office areas of manufacturing and production facilities, not including process areas.

• Office areas of businesses such as food and beverage establishments, agricultural operations, construction, commercial trade, services, etc.

Open riser

A stair step with an air space between treads has an open riser.

Organic peroxide

This is an organic compound containing the bivalent-0-0-structure. It may be considered a structural derivative of hydrogen peroxide if one or both of the hydrogen atoms has been replaced by an organic radical.

Outlet

See definition for electrical outlets.

Oxidizer

A chemical other than a blasting agent or explosive as defined in WAC 296-52-60130 or CFR 1910.109(a), that starts or promotes combustion in other materials, causing fire either of itself or through the release of oxygen or other gases.

Permissible exposure limits (PELs)

Permissible exposure limits (PELs) are employee exposures to toxic substances or harmful physical agents that must not be exceeded. PELs are specified in applicable WISHA rules.

Person

Based on chapter 49.17 RCW, one or more individuals, partnerships, associations, corporations, business trusts, legal representatives, or any organized group of persons.

Personal eyewash units

Personal eyewash units are portable, supplementary units that support plumbed units or self-contained units, or both, by delivering immediate flushing for less than fifteen minutes.

Personal service room

Used for activities not directly connected with a business' production or service function such as:

• First aid
• Medical services
• Dressing
• Showering
• Bathrooms
• Washing
• Eating

Personnel

See the definition for employees.

Physical hazard

As used in Employer Chemical Hazard Communication, WAC 296-800-170 means a chemical that has scientifically valid evidence to show it is one of the following:

• Combustible liquid
• Compressed gas
• Explosive
• Flammable
• Organic peroxide
• Oxidizer
• Pyrophoric
• Unstable (reactive)
• Water reactive

Platform

Platform means an extended step or landing that breaks a continuous run of stairs.

Plug

See definition for attachment plug.

Potable water

Water that you can safely drink. It meets specific safety standards prescribed by the United States Environmental Protection Agency's National Interim Primary Drinking Water Regulations, published in 40 CFR Part 141, and 40 CFR 147.2400.

Predictable and regular basis

Employee functions such as, but not limited to, inspection, service, repair and maintenance which are performed

• at least once every 2 weeks

OR

• 4 man-hours or more during any sequential 4-week period (to calculate man-hours multiply the number of employees by the number of hours during a 4-week period).

Produce

As used in Employer Chemical Hazard Communication, WAC 296-800-170, any one of the following:

• Manufacture
• Process
• Formulate
• Blend
• Extract
• Generate
• Emit
• Repackage

Purchaser

As used in Employer Chemical Hazard Communication, WAC 296-800-170, an employer who buys one or more hazardous chemicals to use in their workplace.

Pyrophoric

A chemical is pyrophoric if it will ignite spontaneously in the air when the temperature is 130°F (54.4°C) or below.

Qualified person

A person who has successfully demonstrated the ability to solve problems relating to the subject matter, work, or project, either by:

• Possession of a recognized degree, certificate, or professional standing;

OR

• Extensive knowledge, training and experience.

Railing or standard railing

A vertical barrier erected along exposed edges of a floor opening, wall opening, ramp, platform, or runway to prevent falls of persons.

Reassume jurisdiction

The department has decided to take back its control over a citation and notice being appealed.

Receptacle or receptacle outlet

As used in basic electrical rules, WAC 296-800-280 means outlets that accept a plug to supply electric power to equipment through a cord or cable.

Record

A record is any item, collection, or grouping of information. Examples include:

• Paper document
• Microfiche
• Microfilm
• X-ray film
• Computer record

Repeat violation

A violation is a repeat violation if the employer has been cited one or more times previously for a substantially similar hazard.

Responsible party

As used in employer chemical hazard communication, WAC 296-800-170. Someone who can provide appropriate information about the hazardous chemical and emergency procedures.

Rise

The vertical distance from the top of a tread to the top of the next higher tread.

Riser

The vertical part of the step at the back of a tread that rises to the front of the tread above.

Rungs

Rungs are the cross pieces on ladders that are used to climb up and down the ladder.

Runway

An elevated walkway above the surrounding floor or ground level. Examples of runways are footwalks along shafting or walkways between buildings.

Safety factor

The term safety factor means the ratio of when something will break versus the actual working stress or safe load when it is used.

Serious violation

Serious violation must be deemed to exist in a workplace if there is a substantial probability that death or serious physical harm could result from a condition which exists, or from one or more practices, means, methods, operations, or processes which have been adopted or are in use in such workplace, unless the employer did not, and could not with the exercise of reasonable diligence, know of the presence of the violation.

Short-term exposure limit (STEL)

An exposure limit, averaged over a short time period (usually measured for 15 minutes) that must not be exceeded during any part of an employee's workday.

Should

Should means recommended.

Single ladder

A type of portable ladder with one section.

It is distinguished by all of the following:

• It has one section
• It cannot support itself
• Its length cannot be adjusted

Smoking

A person is smoking if they are:

• Lighting up
• Inhaling
• Exhaling
• Carrying a pipe, cigar or cigarette of any kind that is burning

Specific chemical identity

This term applies to chemical substances. It can mean the:

• Chemical name
• Chemical Abstracts Service (CAS) registry number
• Any other information that reveals the precise chemical designation of the substance.

Stair railing

A vertical barrier attached to a stairway with an open side to prevent falls. The top surface of the stair railing is used as a handrail

Stairs or stairway

A series of steps and landings:

– leading from one level or floor to another,

– leading to platforms, pits, boiler rooms, crossovers, or around machinery, tanks, and other equipment

– Used more or less continuously or routinely by employees, or only occasionally by specific individuals.

– With three or more risers

Standard safeguard

Safety devices that prevent hazards by their attachment to:

• Machinery
• Appliances
• Tools
• Buildings
• Equipment

These safeguards must be constructed of:

• Metal
• Wood
• Other suitable materials

The department makes the final determination about whether a safeguard is sufficient for its use.

Step ladder

A portable ladder with:

• Flat steps
• A hinge at the top allowing the ladder to fold out and support itself
• Its length that cannot be adjusted.

Time weighted average (TWA_8)

An exposure limit, averaged over 8 hours, that must not be exceeded during an employee's work shift.

Toeboard

A barrier at floor level along exposed edges of a floor opening, wall opening, platform, runway, or ramp, to prevent falls of materials.

Toxic chemical

As used in first aid, WAC 296-800-150, is a chemical that produces serious injury or illness when absorbed through any body surface.

Toxic substance

Any chemical substance or biological agent, such as bacteria, virus, and fungus, which is any of the following:

• Listed in the latest edition of the National Institute for Occupational Safety and Health (NIOSH) *Registry of Toxic Effects of Chemical Substances* (RTECS)

• Shows positive evidence of an acute or chronic health hazard in testing conducted by, or known to, the employer

• The subject of a material safety data sheet kept by or known to the employer showing the material may pose a hazard to human health.

Toxicant

A substance that has the inherent capacity to produce personal injury or illness to individuals by absorption through any body surface.

Trade secret

Any confidential:

• Formula
• Pattern
• Process
• Device
• Information
• Collection of information

The trade secret is used in an employer's business and gives an opportunity to gain an advantage over competitors who do not know or use it.

See WAC 296-62-053 for requirements dealing with trade secrets.

Tread

As used in stairs and stair railings, WAC 296-800-250 means the horizontal part of the stair step.

Tread run

As used in stairs and stair railings, WAC 296-800-250 means the distance from the front of one stair tread to the front of an adjacent tread.

Tread width

The distance from front to rear of the same tread including the nose, if used.

UL (Underwriters' Laboratories, Inc.)

You will find these initials on electrical cords and equipment. The initials mean the cord or equipment meets the standards set by the Underwriters' Laboratories, Inc.

Unstable (reactive)

As used in employer chemical hazard communication, WAC 296-800-170. An unstable or reactive chemical is one that in its pure state, or as produced or transported, will vigorously polymerize, decompose, condense, or will become self-reactive under conditions of shocks, pressure or temperature.

Use

As used in employer chemical hazard communication, WAC 296-800-170, means to:

• Package
• Handle
• React
• Emit
• Extract
• Generate as a by-product
• Transfer.

Vapor

The gaseous form of a substance that is normally in the solid or liquid state.

Voltage of a circuit

The greatest effective potential difference between any two conductors or between a conductor and ground.

Voltage to ground

The voltage between a conductor and the point or conductor of the grounded circuit. For undergrounded circuits, it is the greatest voltage between the conductor and any other conductor of the circuit.

Voltage, nominal

Nominal voltage is a value assigned to a circuit or system to designate its voltage class (120/240, 480Y/277, 600, etc.). The actual circuit voltage can vary from the value if it is within a range that permits the equipment to continue operating in a satisfactory manner.

WAC

This is an acronym for **Washington Administrative Code,** which are rules developed to address state law.

Water-reactive

As used in Employer Chemical Hazard Communication, WAC 296-800-170, a water-reactive chemical reacts with water to release a gas that is either flammable or presents a health hazard.

Watertight

Constructed so that moisture will not enter the enclosure or container.

Weatherproof

Constructed or protected so that exposure to the weather will not interfere with successful operation. Rainproof, raintight, or watertight equipment can fulfill the requirements for weatherproof where varying weather conditions other than wetness, such as snow, ice, dust, or temperature extremes, are not a factor.

Wet location

As used in basic electrical rules, WAC 296-800-280 means:

• Underground installations or in concrete slabs or masonry that are in direct contact with the earth

• Locations that can be saturated by water or other liquids

• Unprotected locations exposed to the weather (like vehicle washing areas)

WISHA

This is an acronym for the Washington Industrial Safety and Health Act.

Work area

As used in employer chemical hazard communication, WAC 296-800-170, a room or defined space in a workplace where hazardous chemicals are produced or used, and where employees are present.

Working days

Means a calendar day, except Saturdays, Sundays, and legal holidays. Legal holidays include:

– New Year's Day - January 1
– Martin Luther King, Jr. Day
– Presidents' Day
– Memorial Day

– Independence Day - July 4
– Labor Day
– Veterans' Day - November 11
– Thanksgiving Day
– The day after Thanksgiving Day; and
– Christmas Day - December 25

The number of working days must be calculated by not counting the first working day and counting the last working day.

Worker

See the definition for employee.

Workplace

• The term workplace means:

– Any plant, yard, premises, room, or other place where an employee or employees are employed for the performance of labor or service over which the employer has the right of access or control, and includes, but is not limited to, all workplaces covered by industrial insurance under Title 51 RCW, as now or hereafter amended.

– As used in Employer Chemical Hazard Communication, WAC 296-800-170 means an establishment, job site, or project, at one geographical location containing one or more work areas.

You

See definition of employer.

Your representative

Your representative is the person selected to act in your behalf.

[Statutory Authority: RCW 49.17.010, 49.17.040, 49.17.050, and 49.17.060. 03-18-090, § 296-800-370, filed 9/2/03, effective 11/1/03. Statutory Authority: RCW 49.17.010, [49.17].040, and [49.17].050. 02-16-047, § 296-800-370, filed 8/1/02, effective 10/1/02; 01-23-060, § 296-800-370, filed 11/20/01, effective 12/1/01; 01-11-038, § 296-800-370, filed 5/9/01, effective 9/1/01.]

Chapter 296-802 WAC
EMPLOYEE MEDICAL AND EXPOSURE RECORDS

WAC

296-802-100	Scope.
296-802-200	Keep employee medical and exposure records.
296-802-20005	Keep employee medical records.
296-802-20010	Keep employee exposure records.
296-802-20015	Keep analyses of medical or exposure records.
296-802-300	Inform employees about records.
296-802-30005	Inform current employees about their medical and exposure records.
296-802-400	Provide employees access to records and analyses.
296-802-40005	Provide access to employee medical records, exposure records, and analyses.
296-802-40010	Provide employee medical records.
296-802-40015	Provide employee exposure records.
296-802-500	Respond to medical record access orders.
296-802-50005	Respond to WISHA access orders for employee medical records.
296-802-50010	Content of WISHA written access orders.
296-802-600	Transfer and disposal of employee records.
296-802-60005	Transfer or dispose of employee medical and exposure records when you go out of business.
296-802-900	Definitions.

WAC 296-802-100 Scope. The purpose of this chapter is to provide employees and their designated representatives the right to access relevant medical and exposure records. It also describes the procedures WISHA will follow when accessing confidential medical information.

This chapter applies to:

• All employers who make, maintain, contract for, or have access to records relating to employee exposure to toxic substances or harmful physical agents, whether or not they are required by specific occupational safety and health rules. These records include:

– Employee medical records.
– Employee exposure records.
– Analyses of employee medical or exposure records.

IMPORTANT:

• The requirements of this chapter do not affect any other legal and ethical obligations the employer has to keep employee medical information confidential.

Exemption: Agricultural operations covered by chapter 296-307 WAC, Safety standards for agriculture, are exempt from the requirements of this chapter.

Reference:
• Requirements for material safety data sheets are found in WAC 296-800-180, Material safety data sheets (MSDSs) as exposure records.
• Additional information about accessing medical information can be found in chapter 70.02 RCW, Medical record—Health care information access and disclosure.

[Statutory Authority: RCW 49.17.010, 49.17.040, 49.17.050, and 49.17.060. 04-10-026, § 296-802-100, filed 4/27/04, effective 8/1/04.]

WAC 296-802-200 Keep employee medical and exposure records.

Summary:

Your responsibility:

To keep employee medical records, exposure records, and analyses.

IMPORTANT:

• Physicians or other health care personnel may keep medical records for you.

• You may keep information in any form as long as the information is retrievable.

• Unless a specific occupational safety and health rule provides a different time period, you must keep records for the period required by this chapter.

You must:

Keep employee medical records
WAC 296-802-20005.
Keep employee exposure records
WAC 296-802-20010.
Keep analyses of medical or exposure records
WAC 296-802-20015.

[Statutory Authority: RCW 49.17.010, 49.17.040, 49.17.050, and 49.17.060. 04-10-026, § 296-802-200, filed 4/27/04, effective 8/1/04.]

WAC 296-802-20005 Keep employee medical records.

You must:

• Keep medical records for at least as long as the employee works for you plus thirty years.

Exemption:
• If an employee works for you for less than **one** year and you provide the records to them when they leave employment, you do not have to keep their medical records.
• You do not need to keep the following records for any specific period:
– Health insurance claims records maintained separately from your medical program and records.
– Records of first-aid treatment, if made on-site by a nonphysician and if kept separately from the employee medical record.

You must:

• Keep chest X-ray films in their original state, such as film or electronic image.

[Statutory Authority: RCW 49.17.010, 49.17.040, 49.17.050, and 49.17.060. 04-10-026, § 296-802-20005, filed 4/27/04, effective 8/1/04.]

WAC 296-802-20010 Keep employee exposure records.

IMPORTANT:

You do not need to keep employee exposure records for exposure to toxic substances when they are:

• Purchased as a consumer product;

AND

• Used in the same manner and frequency that a consumer would use them.

You must:

• Keep employee exposure records for at least thirty years from the date the exposure record was made. These records include the following:

– The sampling results.

– The collection methodology (sampling plan).

– A description of the analytical and mathematical methods used.

– Background data to environmental monitoring or measuring, such as laboratory reports and work sheets.

Note: You do not have to keep the actual background data for more than one year if you keep a summary of the data for thirty years.

You must:

Keep a record, for at least thirty years, of the identity of any toxic substance used in your workplace. Include:

• Where the substance was used.

• When the substance was used.

Note: The identity may be retained either as part of the exposure record or as a separate record.

[Statutory Authority: RCW 49.17.010, 49.17.040, 49.17.050, and 49.17.060. 04-10-026, § 296-802-20010, filed 4/27/04, effective 8/1/04.]

WAC 296-802-20015 Keep analyses of medical or exposure records.

You must:

• Keep each analysis using medical or exposure records for at least thirty years.

[Statutory Authority: RCW 49.17.010, 49.17.040, 49.17.050, and 49.17.060. 04-10-026, § 296-802-20015, filed 4/27/04, effective 8/1/04.]

WAC 296-802-300 Inform employees about records.

Summary:

Your responsibility:

To inform current employees about their medical and exposure records.

You must:

Inform current employees about their medical and exposure records

WAC 296-802-30005.

[Statutory Authority: RCW 49.17.010, 49.17.040, 49.17.050, and 49.17.060. 04-10-026, § 296-802-300, filed 4/27/04, effective 8/1/04.]

WAC 296-802-30005 Inform current employees about their medical and exposure records.

You must:

• Inform employees covered by this rule about medical and exposure records when they first start employment, and then at least annually. Include the following information:

– Where the records are located.

– Who is responsible for the records.

– Who to contact for access to the records.

– Their rights to copy the records.

• Make copies of this rule available upon request to employees.

• Distribute to your employees any information about this chapter that you are given by the department.

Note: Some of the ways to inform employees that you have medical and exposure records include e-mail, letters, posters, or classroom training.

[Statutory Authority: RCW 49.17.010, 49.17.040, 49.17.050, and 49.17.060. 04-10-026, § 296-802-30005, filed 4/27/04, effective 8/1/04.]

WAC 296-802-400 Provide employees access to records and analyses.

Summary:

Your Responsibility:

To provide employees access to records and analyses.

IMPORTANT:

• Employees or their designated representatives can use the collective bargaining process to gain access to records beyond what is required by this chapter.

• The requirements of this section apply to both current and former employees.

You must:

Provide access to employee medical records, exposure records, and analyses

WAC 296-802-40005.

Provide employee medical records

WAC 296-802-40010.

Provide employee exposure records

WAC 296-802-40015.

[Statutory Authority: RCW 49.17.010, 49.17.040, 49.17.050, and 49.17.060. 04-10-026, § 296-802-400, filed 4/27/04, effective 8/1/04.]

WAC 296-802-40005 Provide access to employee medical records, exposure records, and analyses.

You must:

• Provide employees and their designated representatives access to requested records and analyses as follows:

– In a reasonable time, place, and manner.

– Within fifteen working days.

■ If there is a delay, inform the requesting party of the reason and the earliest date the record will be made available.

Exemption: You do not have to provide analyses that are currently being worked on or have not been reported to you.

You must:

• Provide a copy of the record, when requested, to the employee or designated representative without cost. This may be done by one of the following methods:

– Make a copy for the requestor.

– Make the record and a copier available.

– Loan the record to the employee or designated representative for a reasonable time, so a copy can be made.

Note:
- Access to employee medical records will be provided to designated representatives only when the employee provides specific written authorization. See WAC 296-802-40010.
- To locate or identify the records being requested, you may request, from employees or their designated representatives, only known and necessary information. For example, you may request dates and location of where the employee worked during the time period in question.
- You are not required to perform an analysis of medical or exposure records at the request of an employee or designated representative.
- When there is an original X ray you may restrict access to an on-site examination or make other arrangements for a temporary loan.
- When a record has been provided without cost to an employee or designated representative, and they request additional copies, you may charge a reasonable, nondiscriminatory administrative cost. For example, you may charge search and copying expenses but not overhead expenses.
  - A reasonable fee for copying, as defined in chapter 70.02 RCW, should not exceed sixty-five cents per page for the first thirty pages and fifteen cents per page for all additional pages. In addition, a clerical fee for searching and handling may be charged not to exceed fifteen dollars.

[Statutory Authority: RCW 49.17.010, 49.17.040, 49.17.050, and 49.17.060. 04-10-026, § 296-802-40005, filed 4/27/04, effective 8/1/04.]

WAC 296-802-40010 Provide employee medical records.

You must:

• Make sure employees have access, upon request, to their own medical records.

Note:
- A physician, nurse, or other responsible health care professional who maintains employee medical records may delete from requested medical records the identity of individuals who provided confidential information regarding an employee's health status.
- If a physician represents you and believes that providing an employee access to their specific diagnosis of a terminal illness or psychiatric condition could harm the employee, they may request that the record be released only to a designated representative having specific written authorization.
- The physician representing you may recommend that the employee or designated representative do one of the following:
  - Consult with the physician to review and discuss requested records.
  - Accept a summary of facts and opinions instead of requested records.
  - Accept the release of requested records only to another physician or designated representative.

You must:

• Make sure that individual employees are not identified in any portion of analyses that report the contents of employee medical records.

– Identifying information includes both direct identifiers such as name, address, Social Security number, and payroll number, and other information that could reasonably be used in the circumstances to identify individual employees such as exact age, height, or weight.

Note: If it is not feasible to remove personal identifying information from a document, you do not have to provide the portions where personal identifiers cannot be moved.

You must:

• Provide designated representatives access to employee medical records when the employee provides specific written authorization.

– If the written authorization does not contain an expiration date, it expires ninety days after it is signed.

– Release only medical information that exists on the date of the written employee consent, unless the consent specifically states that future information may be released.

Note: An employee may revoke the specific written authorization in writing at any time.

[Statutory Authority: RCW 49.17.010, 49.17.040, 49.17.050, and 49.17.060. 04-10-026, § 296-802-40010, filed 4/27/04, effective 8/1/04.]

WAC 296-802-40015 Provide employee exposure records.

You must:

• Provide requested exposure records that show the type and amount of toxic substances or harmful physical agents to which the employee is or has been exposed, for an employee's current or transfer work assignment.

– In the absence of records specific to the employee, exposure records of other employees with the same job duties or related working conditions will be used to the extent necessary to respond to the request.

• Provide a designated representative, who does not have specific employee consent, access to employee exposure records only when a reasonable written request is made that includes the following:

– The records requested.

– The occupational health need for accessing these records.

Note: Trade secret information may be withheld from exposure records. See chapter 296-816 WAC, Protecting trade secrets, for more information.

[Statutory Authority: RCW 49.17.010, 49.17.040, 49.17.050, and 49.17.060. 04-10-026, § 296-802-40015, filed 4/27/04, effective 8/1/04.]

WAC 296-802-500 Respond to medical record access orders.

Summary:

IMPORTANT:

This section describes how WISHA accesses employee medical records and your related rights and obligations.

Your responsibility:

To post written WISHA access orders.

You must:

Respond to WISHA access orders for employee medical records

WAC 296-802-50005.

Content of WISHA written access orders

WAC 296-802-50010.

[Statutory Authority: RCW 49.17.010, 49.17.040, 49.17.050, and 49.17.060. 04-10-026, § 296-802-500, filed 4/27/04, effective 8/1/04.]

WAC 296-802-50005 Respond to WISHA access orders for employee medical records.

You must:

• Promptly respond to a written access order you receive from WISHA for personally identifiable employee medical information.

• Post a copy of the cover letter you receive from WISHA for fifteen working days where employees can easily review it.

[Statutory Authority: RCW 49.17.010, 49.17.040, 49.17.050, and 49.17.060. 04-10-026, § 296-802-50005, filed 4/27/04, effective 8/1/04.]

WAC 296-802-50010 Content of WISHA written access orders. A written access order from WISHA will contain at least the following information:

• The identity of employees whose medical information is being requested.

– This may be either by name, job classification, time clock number, department, or similar identifier.

• A description of the medical information that will be examined.

• The purpose for seeking access to this medical information.

– Any additional evidence supporting access to the medical information.

• A step-by-step description of how the records will be obtained, copied, reviewed, and stored, specifying the following:

– Who will be in charge of on-site review of the records, or who will take possession of the records for off-site review.

– Where the records will be reviewed.

– When review or receipt of the records is to take place.

– If the records are to be reviewed on-site, what type of information will be copied and removed off-site.

• How personal identifiers will be separated from the medical information and how long this information will be kept.

• The principal WISHA investigator's full name, business address and telephone number.

• The full names and titles of all individuals that will review the records.

• The WISHA industrial hygiene program manager's full name, business address and telephone number.

Note: WISHA does not need a written access order for the following types of employee medical records:

- Medical records and analyses that do not contain personal identification information.
- Examination of records to verify compliance with the medical surveillance requirements of another occupational health and safety rule.
- The following records when required by another occupational health and safety rule:
  - Medical opinions.
  - Biological monitoring results.
  - Results of medical examinations and laboratory tests.

[Statutory Authority: RCW 49.17.010, 49.17.040, 49.17.050, and 49.17.060. 04-10-026, § 296-802-50010, filed 4/27/04, effective 8/1/04.]

WAC 296-802-600 Transfer and disposal of employee records.

Summary:

Your responsibility:

To transfer or dispose of employee medical and exposure records when you go out of business.

You must:

Transfer or dispose of employee medical and exposure records when you go out of business

WAC 296-802-60005.

[Statutory Authority: RCW 49.17.010, 49.17.040, 49.17.050, and 49.17.060. 04-10-026, § 296-802-600, filed 4/27/04, effective 8/1/04.]

WAC 296-802-60005 Transfer or dispose of employee medical and exposure records when you go out of business.

You must:

• Follow the requirements in Table 1 when transferring or disposing of records.

Table 1
Transfer or Disposal of Records

If	Then
Another employer continues the business when you go out of business	Transfer all employee records to that employer
No other employer continues the business when you go out of business	Do the following: – Notify affected current employees of their rights of access to records at least three months prior to the termination of your business **AND EITHER:** – Notify WISHA in writing of your impending decision to dispose of records at least three months prior to your planned disposal; **OR** – Transfer the records to WISHA, if required by a specific WISHA safety and health rule
You intend to dispose of records after the retention period has expired Note: If you dispose of records on a regular basis, you may notify WISHA once annually, at least three months before your first disposal, with the schedule of your planned disposals for the year	• Do the following: – Notify WISHA in writing of your impending decision to dispose of records at least three months prior to your planned disposal; **OR** – Transfer the records to WISHA, if required by a specific WISHA safety and health rule

Note: The address to notify WISHA in writing is:
Department of Labor & Industries/WISHA Services
Attention: Medical Records
P.O. Box 44610
Olympia, WA 98504-4610

[Statutory Authority: RCW 49.17.010, 49.17.040, 49.17.050, and 49.17.060. 04-10-026, § 296-802-60005, filed 4/27/04, effective 8/1/04.]

WAC 296-802-900 Definitions.

Access

The right and opportunity to examine and copy an employee record.

Analysis using exposure or medical records

• Any collection of data or a statistical study based on either:

– Information from individual employee exposure or medical records;

OR

– Information collected from health insurance claim records.

Designated representative

• Any individual or organization to which an employee gives written authorization.

• A recognized or certified collective bargaining agent without regard to written employee authorization.

• The legal representative of a deceased or legally incapacitated employee.

Employee exposure record

Means a record containing any of the following kinds of information:

• Environmental (workplace) monitoring or measuring of a toxic substance or harmful physical agent, including personal, area, grab, wipe, or other form of sampling, as well as related collection and analytical methodologies, calculations, and other background data relevant to interpretation of the results obtained.

• Biological monitoring results which directly assess the absorption of a toxic substance or harmful physical agent by body systems (such as the level of a chemical in the blood, urine, breath, hair, or fingernails) but not including results which assess the biological effect of a substance or agent or which assess an employee's use of alcohol or drugs.

• Material safety data sheets indicating that the material may pose a hazard to human health;

OR

• In the absence of the above:

– A chemical inventory or any other record that reveals where and when used and the identity (e.g., chemical, common or trade name) of a toxic substance or harmful physical agent.

– Exposure records of other employees with past or present job duties or related working conditions.

Employee medical record

A record concerning the health status of an employee which is made or maintained by a physician, nurse, or other health care personnel, or technician, including:

• Medical and employment questionnaires or histories (including job description and occupational exposures).

• The results of medical examinations (preemployment, preassignment, periodic, or episodic) and laboratory tests (including chest and other X-ray examinations taken for purposes of establishing a baseline or detecting occupational illness, and all biological monitoring not defined as an "employee exposure record").

• Medical opinions, diagnoses, progress notes, and recommendations.

• First-aid records.

• Descriptions of treatments and prescriptions.

• Employee medical complaints.

An employee medical record does **not** include any of these types of medical information:

• Physical specimens (for example, blood or urine samples), which are routinely discarded as a part of normal medical practice.

• Records concerning health insurance claims if maintained separately from the employer's medical program and its records, and not accessible to the employer by employee name or other direct personal identifier, such as Social Security number or payroll number.

• Records created solely in preparation for litigation that are privileged from discovery under applicable rules of procedure or evidence.

• Records concerning voluntary employee assistance programs, such as alcohol, drug abuse, or personal counseling programs, if maintained separately from the employer's medical program and records.

Exposure or exposed

The contact an employee has with a toxic substance, harmful physical agent or oxygen deficient condition. Exposure can occur through various routes, such as inhalation, ingestion, skin contact, or skin absorption.

First aid

Any of the following are considered first aid:

• Using a nonprescription medication at nonprescription strength.

• Administering tetanus immunizations. Other immunizations, such as Hepatitis B vaccine or rabies vaccine, are considered medical treatment.

• Cleaning, flushing or soaking wounds on the surface of the skin.

• Using wound coverings such as bandages, Band-Aids™, or gauze pads.

• Using butterfly bandages or Steri-Strips™.

• Using hot or cold therapy.

• Using any nonrigid means of support, such as elastic bandages, wraps, or nonrigid back belts.

• Using temporary immobilization devices, such as splints, slings, neck collars, or back boards, while transporting an accident victim.

• Drilling a fingernail or toenail to relieve pressure.

• Draining fluid from a blister.

• Using eye patches.

• Removing foreign bodies from the eye using only irrigation or a cotton swab.

• Removing splinters or foreign material from areas other than the eye by irrigation, tweezers, cotton swabs or other simple means.

• Using finger guards.

• Using massages.

• Drinking fluids for relief of heat stress.

Harmful physical agent

Any physical stress such as noise, vibration, repetitive motion, heat, cold, ionizing and nonionizing radiation, and hypo- or hyperbaric pressure which:

• Is listed in the latest edition of the National Institute for Occupational Safety and Health (NIOSH) *Registry of Toxic Effects of Chemical Substances* (RTECS);

OR

• Has shown positive evidence of an acute or chronic health hazard in testing conducted by, or known to, the employer;

OR

• Is the subject of a material safety data sheet kept by or known to the employer showing that the material may pose a hazard to human health.

Health professional

A physician, occupational health nurse, industrial hygienist, toxicologist, or epidemiologist, who provides medical or other occupational health services to exposed employees.

Record

Any item, collection, or grouping of information. Examples include:

• Paper document.

• Microfiche.

• Microfilm.

• X-ray film.

• Computer record.

Specific chemical identity

Any other information that reveals the precise chemical designation of the substance, such as:

• Chemical name;

OR

• Chemical abstracts service (CAS) registry number.

Specific written authorization

A written authorization containing at least the following:

• The name and signature of the employee authorizing the release of medical information.

• The date of the written authorization.

• The name of the individual or organization that is authorized to release the medical information.

• The name of the designated representative (individual or organization) that is authorized to receive the information.

• A general description of the medical information that is authorized to be released.

• A general description of the purpose for the release of the medical information.

• A date or condition upon which the written authorization will expire.

Toxic substance

Any chemical substance or biological agent, such as bacteria, virus, and fungus, which is any of the following:

• Listed in the latest edition of the National Institute for Occupational Safety and Health (NIOSH) *Registry of Toxic Effects of Chemical Substances* (RTECS).

• Shows positive evidence of an acute or chronic health hazard in testing conducted by, or known to, the employer.

• The subject of a material safety data sheet kept by or known to the employer showing the material may pose a hazard to human health.

Trade secrets

Any confidential information that is used in an employer's business and gives an opportunity to gain an advantage over competitors who do not know or use it. It can be a:

• Formula.

• Pattern.

• Process.

• Device.

• Information.

• Collection of information.

[Statutory Authority: RCW 49.17.010, 49.17.040, 49.17.050, and 49.17.060. 04-10-026, § 296-802-900, filed 4/27/04, effective 8/1/04.]

Chapter 296-803 WAC

LOCKOUT/TAGOUT (CONTROL OF HAZARDOUS ENERGY)

WAC

296-803-100	Scope.
296-803-200	Summary.
296-803-20005	Establish a written energy control program.
296-803-300	Summary.
296-803-30005	Make sure new or modified machines and equipment can accept lockout devices.
296-803-400	Summary.
296-803-40005	Provide appropriate means to control energy.
296-803-40010	Make sure lockout and tagout devices meet these requirements.
296-803-40015	Make sure lockout devices meet these additional requirements.
296-803-40020	Make sure tagout devices meet these additional requirements.
296-803-500	Summary.
296-803-50005	Use energy control procedures.
296-803-50010	Meet these requirements when applying lockout or tagout devices.
296-803-50015	Meet these additional requirements when applying lockout devices.
296-803-50020	Meet these additional requirements when applying tagout devices.
296-803-50025	Protect employees from the hazards of stored and residual energy.
296-803-50030	Verify that the machine or equipment is safe before starting work.
296-803-50035	Meet these requirements when removing lockout or tagout devices and energizing the machine or equipment.
296-803-50040	Meet these requirements if it's necessary to temporarily energize a machine, equipment, or component for testing or positioning.
296-803-50045	Protect employees during shift or personnel changes.
296-803-50050	Protect employees working in a group.
296-803-50055	Meet these additional requirements if more than one group is used.
296-803-50060	Coordinate with outside employers servicing or maintaining your machines or equipment.
296-803-600	Summary.
296-803-60005	Provide and document employee training on the energy control program.
296-803-60010	Provide additional training if you use tagout devices.
296-803-60015	Retrain employees when necessary.
296-803-700	Summary.
296-803-70005	Perform and document periodic reviews to verify employees know and follow the energy control procedures.
296-803-70010	Do periodic reviews of procedures using lockout devices.
296-803-70015	Do periodic reviews of procedures using tagout devices.
296-803-800	Definitions.

WAC 296-803-100 Scope. This chapter applies to the service and maintenance of machines and equipment, including piping systems, if employees could be injured by the:

– Unexpected energization or start up of the machine or equipment;

OR

– Release of stored energy.

Energy sources include mechanical, hydraulic, pneumatic, chemical, thermal, or other energy, including gravity.

Note:
- Machines and equipment include those that produce high intensity electromagnetic fields.
- When other Title 296 WAC standards require the use of lockout or tagout, they have to be used and supplemented by the procedural and training requirements of this chapter.

Exemption: This chapter does not apply to:
- Construction activities covered by chapter 296-155 WAC, Safety standards for construction work.
- Agriculture activities covered by chapter 296-307 WAC, Safety standards for agriculture.
- Maritime activities covered by chapter 296-56 WAC, Safety standards—Longshore, stevedore and related waterfront operations and chapter 296-304 WAC, Safety standards for ship repairing, shipbuilding and shipbreaking.
- Oil and gas well drilling and servicing.
- Installations for generating, transmitting, and distributing electrical power (including related communication and metering equipment) that are controlled exclusively by electric utilities.

- Hot tap operations on pressurized pipelines used to transmit and distribute substances such as gas, steam, water, or petroleum products if the employer can demonstrate that all of the following apply:
  - Continuity of service is essential.
  - Shutdown of the system is impractical.
  - Proven effective employee protection is provided by following documented procedures and using special equipment.
- Service and maintenance of fire alarm and extinguishing systems and their components if:
  - Other employees depend on these systems for fire safety;

AND

  - Employees working on fire extinguishing systems are protected from the unexpected release of hazardous energy by appropriate alternative measures.
- Work on electric equipment receiving power only through a cord and plug if:
  - Unplugging the equipment eliminates the possibility of unexpected energization, unexpected start up, or the release of stored energy;

AND

  - The plug is kept under the exclusive control of the employee doing the service or maintenance.
- Exposure to electrical hazards from electrical work on, near, or with conductors or equipment that is covered by chapter 296-24 WAC, General safety and health standards, Part L, Electrical.
- Service and maintenance during normal production operations, if an employee is not required to:
  - Remove or bypass a guard or other safety device;

OR

  - Place any body part into the point of operation or any other hazardous area created by machine operation.
- Minor tool changes, adjustments, and other minor service during normal production operations if:
  - They are routine, repetitive, and integral to the use of the equipment for production;

AND

  - The work is done using measures which provide effective protection from hazards.

[Statutory Authority: RCW 49.17.010, 49.17.040, 49.17.050, and 49.17.060. 04-15-105, § 296-803-100, filed 7/20/04, effective 11/1/04.]

WAC 296-803-200 Summary.

Your responsibility:

To establish an energy control program.

You must:

WAC 296-803-20005 Establish a written energy control program.

[Statutory Authority: RCW 49.17.010, 49.17.040, 49.17.050, and 49.17.060. 04-15-105, § 296-803-200, filed 7/20/04, effective 11/1/04.]

WAC 296-803-20005 Establish a written energy control program.

You must:

• Establish a written energy control program to protect employees that service or maintain a machine or equipment from injury caused by the:

– Unexpected energization or start up of the machine or equipment;

OR

– Release of stored energy.

• Make sure the program contains **all** of the following:

– Energy control procedures as described in WAC 296-803-500.

– Employee training as described in WAC 296-803-600.

– Periodic reviews as described in WAC 296-803-700.

• Develop and document in writing energy control procedures to protect employees doing service or maintenance of a machine or equipment from potentially hazardous energy.

Exemption: You do not have to have **written** energy control procedures for a particular machine or equipment if **all** of the following apply:

- The machine or equipment has a single energy source that is easily identified and can be isolated.
- The machine or equipment is completely deenergized and deactivated by isolating and locking out the energy source.
- There's no stored or residual energy that could be a hazard to employees, and the machine or equipment cannot reaccumulate such energy after it's been shut down.
- The energy source can be locked out with a single lockout device.
- The machine or equipment is isolated from the energy source and locked out during service or maintenance.
- The authorized employee doing the service or maintenance has exclusive control of the lockout device.
- The service or maintenance does not create a hazard for other employees.
- The machine or equipment has never been unexpectedly energized or activated during service or maintenance.

You must:

• Make sure energy control procedures clearly and specifically outline:

– The scope, purpose, authorization, rules, and techniques to control hazardous energy;

AND

– How you'll make sure employees follow the procedures.

• Make sure energy control procedures specifically identify at least the following:

– When the procedure must be used.

– What the specific procedural steps are for:

■ Shutting down, isolating, blocking, and securing the machine or equipment.

■ Placing, removing, and transferring lockout or tagout devices and who is responsible for them.

– How to test the machine or equipment to verify the effectiveness of lockout devices, tagout devices, and other energy control measures.

Note: Similar machines and equipment may be covered by a single written procedure if **all** of the following apply:

- They use the same type and magnitude of energy.
- They have the same or similar types of controls.
- The specific machines and equipment covered by the procedure are identified by at least type and location.

[Statutory Authority: RCW 49.17.010, 49.17.040, 49.17.050, and 49.17.060. 04-15-105, § 296-803-20005, filed 7/20/04, effective 11/1/04.]

WAC 296-803-300 Summary.

Your responsibility:

To make sure new or modified machines and equipment can accept lockout devices.

You must:

WAC 296-803-30005 Make sure new or modified machines and equipment can accept lockout devices.

[Statutory Authority: RCW 49.17.010, 49.17.040, 49.17.050, and 49.17.060. 04-15-105, § 296-803-300, filed 7/20/04, effective 11/1/04.]

WAC 296-803-30005 Make sure new or modified machines and equipment can accept lockout devices.

You must:

• Make sure energy-isolating devices designed to accept a lockout device are provided on machines and equipment that:

– Are newly installed.

– Have major repair.

– Are renovated or modified.

[Statutory Authority: RCW 49.17.010, 49.17.040, 49.17.050, and 49.17.060. 04-15-105, § 296-803-30005, filed 7/20/04, effective 11/1/04.]

WAC 296-803-400 Summary.

Your responsibility:

To provide appropriate lockout and tagout devices and means to control energy.

You must:

WAC 296-803-40005 Provide appropriate means to control energy.

WAC 296-803-40010 Make sure lockout and tagout devices meet these requirements.

WAC 296-803-40015 Make sure lockout devices meet these additional requirements.

WAC 296-803-40020 Make sure tagout devices meet these additional requirements.

[Statutory Authority: RCW 49.17.010, 49.17.040, 49.17.050, and 49.17.060. 04-15-105, § 296-803-400, filed 7/20/04, effective 11/1/04.]

WAC 296-803-40005 Provide appropriate means to control energy.

You must:

• Provide the means necessary to isolate, secure, or block machines and equipment from energy sources.

Note: Examples of means to control energy include:
- Locks.
- Tags.
- Chains.
- Wedges.
- Key blocks.
- Adapter pins.
- Self-locking fasteners.
- Blind flanges.
- Cribbing.

[Statutory Authority: RCW 49.17.010, 49.17.040, 49.17.050, and 49.17.060. 04-15-105, § 296-803-40005, filed 7/20/04, effective 11/1/04.]

WAC 296-803-40010 Make sure lockout and tagout devices meet these requirements.

You must:

• Make sure lockout and tagout devices meet all of the following:

– Create **no** additional hazards.

– Have a distinctive design or appearance.

– Are the only devices used for controlling energy.

– Are **not** used for any other purpose.

– Are durable enough to withstand the environment they're used in for the maximum time they're expected to be used.

– Are standardized within the facility by color, shape, or size.

– Identify the person applying the device.

[Statutory Authority: RCW 49.17.010, 49.17.040, 49.17.050, and 49.17.060. 04-15-105, § 296-803-40010, filed 7/20/04, effective 11/1/04.]

WAC 296-803-40015 Make sure lockout devices meet these additional requirements.

You must:

• Make sure lockout devices are strong enough so that removing them by other than the normal unlocking method requires:

– Excessive force;

OR

– Unusual techniques such as the use of bolt cutters or other metal-cutting tools.

[Statutory Authority: RCW 49.17.010, 49.17.040, 49.17.050, and 49.17.060. 04-15-105, § 296-803-40015, filed 7/20/04, effective 11/1/04.]

WAC 296-803-40020 Make sure tagout devices meet these additional requirements.

You must:

• Make sure all tags:

– Use the same print and format within a facility.

– Are constructed and printed so they will not deteriorate and the message on the tag remains legible when:

■ Exposed to weather.

■ Used in wet or damp locations.

■ Used in corrosive environments such as areas where acid or alkali chemicals are handled or stored.

– Have a warning about **not** energizing the machine or equipment.

Note: The warning on the tag should include wording such as:
- Do not start.
- Do not open.
- Do not close.
- Do not energize.
- Do not operate.

You must:

• Make sure tagout devices are strong enough to prevent unintentional or accidental removal.

• Make sure the means used to attach the tag to the energy-isolating device meets all of the following:

– Is not reusable.

– Is self-locking.

– Can be attached by hand.

– Cannot be released with a force of less than fifty pounds.

– Is similar in design and basic characteristics to a one-piece, all-environment-tolerant, nylon cable tie.

[Statutory Authority: RCW 49.17.010, 49.17.040, 49.17.050, and 49.17.060. 04-15-105, § 296-803-40020, filed 7/20/04, effective 11/1/04.]

WAC 296-803-500 Summary.

Your responsibility:

To make sure energy control procedures are used and include these requirements.

You must:

ENERGY CONTROL PROCEDURES

WAC 296-803-50005 Use energy control procedures.

APPLYING LOCKOUT OR TAGOUT DEVICES

WAC 296-803-50010 Meet these requirements when applying lockout or tagout devices.

WAC 296-803-50015 Meet these additional requirements when applying lockout devices.

WAC 296-803-50020 Meet these additional requirements when applying tagout devices.

STORED ENERGY

WAC 296-803-50025 Protect employees from the hazards of stored and residual energy.

VERIFYING MACHINE ISOLATION

WAC 296-803-50030 Verify that the machine or equipment is safe before starting work.

REMOVING ENERGY CONTROL DEVICES

WAC 296-803-50035 Meet these requirements when removing lockout or tagout devices and energizing the machine or equipment.

TEMPORARY ENERGIZATION

WAC 296-803-50040 Meet these requirements if it's necessary to temporarily energize a machine, equipment, or component for testing or positioning.

SHIFT OR PERSONNEL CHANGES

WAC 296-803-50045 Protect employees during shift or personnel changes.

GROUP LOCKOUT/TAGOUT

WAC 296-803-50050 Protect employees working in a group.

WAC 296-803-50055 Meet these additional requirements if more than one group is used.

OUTSIDE EMPLOYEES

WAC 296-803-50060 Coordinate with outside employers servicing or maintaining your machines or equipment.

[Statutory Authority: RCW 49.17.010, 49.17.040, 49.17.050, and 49.17.060. 04-15-105, § 296-803-500, filed 7/20/04, effective 11/1/04.]

WAC 296-803-50005 Use energy control procedures.

You must:

• Use energy control procedures to protect employees servicing or maintaining machines and equipment from potentially hazardous energy.

• Use a lockout system if an energy-isolating device can be locked out.

Exemption: A tagout system may be used instead of a lockout system if it meets **all** of the following:
- The tagout device is attached where you would have put the lockout device.
- The tagout system provides the same level of employee protection as a lockout system.
- You can demonstrate that the tagout system:
  - Meets all tagout requirements of this chapter.
  - Includes additional safety measures to provide the same level of safety as a lockout system.

Note: Additional safety measures used with the tagout system to provide protection equal to a lockout system could include actions such as:
- Removing part of the isolating circuit.
- Blocking a controlling switch.
- Opening an extra disconnecting device.
- Removing a valve handle.

You must:

• Use a tagout system if an energy-isolating device cannot be locked out.

[Statutory Authority: RCW 49.17.010, 49.17.040, 49.17.050, and 49.17.060. 04-15-105, § 296-803-50005, filed 7/20/04, effective 11/1/04.]

WAC 296-803-50010 Meet these requirements when applying lockout or tagout devices.

You must:

• Make sure, before a machine or equipment is turned off, that the authorized employee knows **all** of the following:

– Type and magnitude of the energy.

– Hazards of the energy to be controlled.

– Method or means to control the energy.

• Turn off or shut down the machine or equipment using established procedures.

• Completely isolate the machine or equipment from its energy sources using the appropriate energy-isolating devices after the machine or equipment has been turned off.

• Make sure you or the authorized employee notify affected employees that the machine or equipment is being locked or tagged out before the devices are applied.

• Make sure a lockout or tagout device is applied:

– For each energy-isolating device.

– Only by the authorized employee doing the service or maintenance.

[Statutory Authority: RCW 49.17.010, 49.17.040, 49.17.050, and 49.17.060. 04-15-105, § 296-803-50010, filed 7/20/04, effective 11/1/04.]

WAC 296-803-50015 Meet these additional requirements when applying lockout devices.

You must:

• Make sure lockout devices hold the energy-isolating device in a "safe" or "off" position.

[Statutory Authority: RCW 49.17.010, 49.17.040, 49.17.050, and 49.17.060. 04-15-105, § 296-803-50015, filed 7/20/04, effective 11/1/04.]

WAC 296-803-50020 Meet these additional requirements when applying tagout devices.

You must:

• Make sure a tagout device is put on an energy-isolating device so it clearly shows that moving the energy-isolating device from the "safe" or "off" position is prohibited.

• Make sure a tagout device, when used with an energy-isolating device that can be locked out, is fastened to the device at the same point a lock would have been attached.

• Make sure a tagout device that cannot be attached directly to an energy-isolating device is located:

– As close as safely possible to the energy-isolating device;

AND

– In a position that is immediately obvious to anyone attempting to operate the energy-isolating device.

[Statutory Authority: RCW 49.17.010, 49.17.040, 49.17.050, and 49.17.060. 04-15-105, § 296-803-50020, filed 7/20/04, effective 11/1/04.]

WAC 296-803-50025 Protect employees from the hazards of stored and residual energy.

You must:

• Make sure all potentially hazardous stored and residual energy is relieved, disconnected, restrained, or otherwise rendered safe after the lockout or tagout devices have been put on the energy-isolating devices.

• Continue to verify the isolation of machines and equipment that could reaccumulate stored energy to a hazardous level until:

– Service or maintenance is completed;

OR

– The possibility of reaccumulating hazardous energy does not exist.

[Statutory Authority: RCW 49.17.010, 49.17.040, 49.17.050, and 49.17.060. 04-15-105, § 296-803-50025, filed 7/20/04, effective 11/1/04.]

WAC 296-803-50030 Verify that the machine or equipment is safe before starting work.

You must:

• Make sure the authorized employee verifies that the machine or equipment that's been locked out or tagged out has been isolated from all energy sources and deenergized before starting work.

[Statutory Authority: RCW 49.17.010, 49.17.040, 49.17.050, and 49.17.060. 04-15-105, § 296-803-50030, filed 7/20/04, effective 11/1/04.]

WAC 296-803-50035 Meet these requirements when removing lockout or tagout devices and energizing the machine or equipment.

You must:

• Make sure the authorized employee does the following before removing any lockout or tagout device:

– Inspects the work area to make sure nonessential items have been removed;

– Verifies the machine or equipment is in operating condition and ready to energize;

AND

– Check that employees in the area are in positions that make it safe to energize the machine or equpiment.

• Make sure only the authorized employee who applied a lockout or tagout device removes it.

Exemption: The employer may have the lockout or tagout device removed by someone other than the authorized employee who applied it if **all** of the following conditions are met:

- The energy control program has documented, specific procedures and training for this situation.
- You can show that the specific procedures used are as safe as having the device removed by the authorized employee who applied it.
- The specific procedures include at least the following:
  - Verifying the authorized employee who applied the device is not at the facility.
  - Making all reasonable efforts to contact and inform the authorized employee that the lockout or tagout device is being removed.
  - Making sure the authorized employee is informed, before resuming work at the facility, that the lockout or tagout device has been removed.

You must:

• Do the following before energizing or starting the machine or equipment:

– Notify affected employees that the lockout or tagout devices have been removed.

[Statutory Authority: RCW 49.17.010, 49.17.040, 49.17.050, and 49.17.060. 04-15-105, § 296-803-50035, filed 7/20/04, effective 11/1/04.]

WAC 296-803-50040 Meet these requirements if it's necessary to temporarily energize a machine, equipment, or component for testing or positioning.

You must:

• Follow your normal energy control procedures to:

– Remove the lockout or tagout devices.

– Energize the machine, equipment, or component.

– Reapply the lockout or tagout devices when testing or positioning is completed.

[Statutory Authority: RCW 49.17.010, 49.17.040, 49.17.050, and 49.17.060. 04-15-105, § 296-803-50040, filed 7/20/04, effective 11/1/04.]

WAC 296-803-50045 Protect employees during shift or personnel changes.

You must:

• Use specific procedures for shift or personnel changes to:

– Make sure there's continuous lockout or tagout protection during the change;

AND

– Provide for the orderly transfer of lockout or tagout device protection between employees.

[Statutory Authority: RCW 49.17.010, 49.17.040, 49.17.050, and 49.17.060. 04-15-105, § 296-803-50045, filed 7/20/04, effective 11/1/04.]

WAC 296-803-50050 Protect employees working in a group.

You must:

• Make sure your energy control procedures provide each member of a crew, craft, department, or other group with the same level of protection as that provided by an individual lockout or tagout device.

• Make sure each authorized employee:

– Puts a personal lockout or tagout device on the group lockout device, lockbox, or comparable mechanism before beginning work;

AND

– Does **not** remove it until they have finished work on the machine or equipment.

• Assign a primary authorized employee who:

– Has overall responsibility for the service or maintenance;

– Attaches their lockout or tagout device to the energy-isolating device when the equipment is deenergized and before any work begins;

AND

– Is the last person to remove their lockout or tagout device when the job is completed.

Definition:

The ***primary authorized employee*** is the authorized employee who has overall responsibility for meeting the requirements of the lockout/tagout procedures.

[Statutory Authority: RCW 49.17.010, 49.17.040, 49.17.050, and 49.17.060. 04-15-105, § 296-803-50050, filed 7/20/04, effective 11/1/04.]

WAC 296-803-50055 Meet these additional requirements if more than one group is used.

You must:

• Do **all** of the following if more than one group works on a machine or equipment that has to be locked or tagged out:

– Assign an authorized employee as the group coordinator with overall responsibility to:

■ Coordinate the different work groups;

AND

■ Maintain continuous lockout or tagout protection.

– Assign a primary authorized employee in each group who has:

■ Responsibility for the group of employees who are protected by a group lockout or tagout device;

AND

■ A way to determine which employees of the group are exposed to the machine or equipment that's locked or tagged out.

[Statutory Authority: RCW 49.17.010, 49.17.040, 49.17.050, and 49.17.060. 04-15-105, § 296-803-50055, filed 7/20/04, effective 11/1/04.]

WAC 296-803-50060 Coordinate with outside employers servicing or maintaining your machines or equipment.

You must:

• Do the following before allowing another employer's personnel to service or maintain machines or equipment if your energy control procedures require they be locked or tagged out:

– Inform the outside employer of your lockout or tagout procedures.

– Make sure the outside employer informs you of their lockout or tagout procedures.

– Make sure you and the outside employer confirm that all employees understand and will follow the restrictions of the other employer's energy control program.

[Statutory Authority: RCW 49.17.010, 49.17.040, 49.17.050, and 49.17.060. 04-15-105, § 296-803-50060, filed 7/20/04, effective 11/1/04.]

WAC 296-803-600 Summary.

Your responsibility:

To train employees on your energy control program.

You must:

WAC 296-803-60005 Provide and document employee training on the energy control program.

WAC 296-803-60010 Provide additional training if you use tagout devices.

WAC 296-803-60015 Retrain employees when necessary.

[Statutory Authority: RCW 49.17.010, 49.17.040, 49.17.050, and 49.17.060. 04-15-105, § 296-803-600, filed 7/20/04, effective 11/1/04.]

WAC 296-803-60005 Provide and document employee training on the energy control program.

You must:

• Train employees to make sure that they:

– Understand the purpose and function of the energy control program;

AND

– Have the knowledge and skills necessary to carry out their program responsibilities.

• Train each authorized employee in:

– The type and magnitude of energy available in the workplace.

– Recognizing hazardous energy sources that apply.

– Methods and means to isolate and control energy.

• Instruct each affected employee in the purpose and use of the energy control procedures.

• Instruct all employees who work or may work where energy control procedures might be used about the:

– Procedures being used;

AND

– Prohibition against attempting to restart or reenergize a machine or equipment that's locked out or tagged out.

• Document that employee training has been done and kept up to date.

– Include the employee's name and the training date.

[Statutory Authority: RCW 49.17.010, 49.17.040, 49.17.050, and 49.17.060. 04-15-105, § 296-803-60005, filed 7/20/04, effective 11/1/04.]

WAC 296-803-60010 Provide additional training if you use tagout devices.

You must:

• Make sure employees are trained in the following:

– Tags are warning devices and do not provide the same level of physical restraint as a lock.

– When attached to energy-isolating devices, tags are not to be:

■ Removed without the approval of the authorized person responsible for it;

OR

■ Bypassed, ignored, or otherwise defeated.

– Tags need to be legible and understandable to be effective.

– Tags may evoke a false sense of security.

– The meaning of tags needs to be understood as part of the overall energy control program.

– Tags and their means of attachment must be:

■ Securely attached to energy-isolating devices so they cannot be inadvertently or accidentally detached;

AND

■ Made of materials that will withstand the environmental conditions they will be exposed to.

[Statutory Authority: RCW 49.17.010, 49.17.040, 49.17.050, and 49.17.060. 04-15-105, § 296-803-60010, filed 7/20/04, effective 11/1/04.]

WAC 296-803-60015 Retrain employees when necessary.

You must:

• Retrain authorized and affected employees to introduce new or revised control methods and procedures when there's a change in **any** of the following:

– Job assignments.

– Machines, equipment, or processes that present a new hazard.

– Energy control procedures.

• Retrain employees to reestablish proficiency when:

– A periodic inspection shows the employee deviates from, or has inadequate knowledge of, the energy control procedures;

OR

– The employer has reason to believe retraining is necessary.

[Statutory Authority: RCW 49.17.010, 49.17.040, 49.17.050, and 49.17.060. 04-15-105, § 296-803-60015, filed 7/20/04, effective 11/1/04.]

WAC 296-803-700 Summary.

Your responsibility:

To do periodic reviews to make sure employees know and use your energy control procedures.

You must:

WAC 296-803-70005 Perform and document periodic reviews to verify employees know and follow the energy control procedures.

WAC 296-803-70010 Do periodic reviews of procedures using lockout devices.

WAC 296-803-70015 Do periodic reviews of procedures using tagout devices.

[Statutory Authority: RCW 49.17.010, 49.17.040, 49.17.050, and 49.17.060. 04-15-105, § 296-803-700, filed 7/20/04, effective 11/1/04.]

WAC 296-803-70005 Perform and document periodic reviews to verify employees know and follow the energy control procedures.

You must:

• Do a periodic review at least annually to:

– Make sure employees know and can apply the energy control procedures.

– Correct any deviations or inadequacies identified.

Exemption: Energy control procedures used less frequently than once a year only need to be reviewed before being used.

You must:

• Have the periodic review done by an authorized employee other than the ones using the energy control procedure being reviewed.

• Document that periodic reviews have been done.

– Include all of the following:

■ Machine or equipment the energy control procedure was used for.

■ Date of the review.

■ Employees included in the review.

■ Person doing the review.

[Statutory Authority: RCW 49.17.010, 49.17.040, 49.17.050, and 49.17.060. 04-15-105, § 296-803-70005, filed 7/20/04, effective 11/1/04.]

WAC 296-803-70010 Do periodic reviews of procedures using lockout devices.

You must:

• Make sure, if a periodic review involves lockout devices, the reviewing employee reviews responsibilities with each authorized employee who uses the procedure.

Note: Periodic reviews of authorized employees using energy control procedures involving only lockout devices can be done in a group meeting if desired.

[Statutory Authority: RCW 49.17.010, 49.17.040, 49.17.050, and 49.17.060. 04-15-105, § 296-803-70010, filed 7/20/04, effective 11/1/04.]

WAC 296-803-70015 Do periodic reviews of procedures using tagout devices.

You must:

• Make sure, if a periodic review involves tagout devices, the reviewing employee reviews with each authorized and affected employee the:

– Employee's responsibilities under the procedure;

AND

– Limitations of tagout devices.

Note: Periodic reviews of authorized and affected employees using energy control procedures involving tagout devices have to be done with each employee individually.

Reference: See WAC 296-803-60010, Provide additional training if you use tagout devices, in this chapter for the limitations of tagout devices.

[Statutory Authority: RCW 49.17.010, 49.17.040, 49.17.050, and 49.17.060. 04-15-105, § 296-803-70015, filed 7/20/04, effective 11/1/04.]

WAC 296-803-800 Definitions.

Affected employee. An employee who's required to operate, use, or be in the area where a machine or equipment could be locked or tagged out for service or maintenance.

Authorized employee. An employee who locks or tags out a machine or equipment to do service or maintenance.

Can be locked out. An energy-isolating device that can be locked in the "off" or "safe" position.

Employer. Based on chapter 49.17 RCW, an employer is any person, firm, corporation, partnership, business trust, legal representative, or other business entity which engages in any business, industry, profession, or activity in this state and employs one or more employees or who contracts with one or more persons, the essence of which is the personal labor of such person or persons and includes the state, counties, cities, and all municipal corporations, public corporations, political subdivisions of the state, and charitable organizations: Provided, That any persons, partnership, or business entity not having employees, and who is covered by the Industrial Insurance Act must be considered both an employer and an employee.

Energized. Connected to an energy source or containing residual or stored energy.

Energy-isolating device. A mechanical device that physically prevents transmitting or releasing energy. This includes, but is not limited to:

• Manually operated electrical circuit breakers.

• Disconnect switches.

• Manually operated switches that disconnect the conductors of a circuit from all ungrounded supply conductors if no pole of the switch can be operated independently.

• Line valves.

• Blocks.

• Similar devices used to block or isolate energy.

Energy source. Any source of electrical, mechanical, hydraulic, pneumatic, chemical, thermal or other energy, including gravity.

Hot tap. A procedure which involves welding on pressurized pipelines, vessels, or tanks to install connections or accessories. It's commonly used to replace or add sections of pipeline used in air, gas, water, steam, and petrochemical distribution systems without interrupting service.

Lockout. Placing a lockout device on an energy-isolating device using an established procedure to make sure the machine or equipment cannot be operated until the lockout device is removed.

Lockout device. A device that uses a positive means, such as a key or combination lock, to hold an energy-isolating device in the "safe" or "off" position. This includes blank flanges and bolted slip blinds.

Normal production operations. Using a machine or equipment for its intended production function.

Primary authorized employee. An authorized employee who has overall responsibility for meeting the requirements of the lockout/tagout procedures.

Service and maintenance. Activities such as constructing, installing, setting-up, adjusting, modifying, maintaining, and servicing machines or equipment. It also includes lubricating, cleaning, unjamming, and making tool changes.

Setting-up. Work done to prepare a machine or equipment for normal production operations.

Tagout. Placing a tagout device on an energy-isolating device using an established procedure to indicate that the energy-isolating device and the machine or equipment being controlled may not be operated until the tagout device is removed.

Tagout device. A prominent warning device, such as a tag and a means of attachment. It can be securely fastened to an energy-isolating device to indicate that the energy-isolating device and the machine or equipment being controlled may not be operated until the tagout device is removed.

You. See definition of employer.

[Statutory Authority: RCW 49.17.010, 49.17.040, 49.17.050, and 49.17.060. 04-15-105, § 296-803-800, filed 7/20/04, effective 11/1/04.]

Chapter 296-806 WAC
MACHINE SAFETY

WAC

296-806-100 Scope.

REQUIREMENTS FOR ALL MACHINES

296-806-200 Summary.

WORKPLACE

296-806-20002 Secure machines designed to stay in one place.
296-806-20004 Protect employees from slipping hazards around machinery.
296-806-20006 Arrange work areas to avoid creating hazards.

MACHINE CONTROLS AND OPERATIONS

296-806-20008 Make sure operating controls meet these requirements.
296-806-20010 Protect employees from unintentional machine operation.
296-806-20012 Make sure emergency stop controls meet these requirements.
296-806-20014 Control machine vibration.
296-806-20016 Prevent overspeed conditions.
296-806-20018 Make sure hand feeding and retrieval tools meet these requirements.
296-806-20020 Protect employees who are adjusting or repairing machinery.

POWER TRANSMISSION PARTS

296-806-20022 Keep power transmission equipment in good working condition.
296-806-20024 Inspect power transmission parts.
296-806-20026 Protect employees lubricating moving machinery.

SAFEGUARDING REQUIREMENTS

296-806-20028 Safeguard employees from the point of operation.
296-806-20030 Safeguard employees from nip or shear point hazards.
296-806-20032 Safeguard employees from rotating or revolving parts.
296-806-20034 Safeguard employees from reciprocating or other moving parts.
296-806-20036 Safeguard employees from flying objects.
296-806-20038 Safeguard employees from falling objects.
296-806-20040 Safeguard employees from moving surfaces with hazards.

SAFEGUARDING METHODS
Guards

296-806-20042 Make sure guards meet these requirements.

DEVICES

296-806-20044 Make sure devices meet these requirements.
296-806-20046 Make sure light curtains meet these requirements.
296-806-20048 Make sure pressure-sensitive mats meet these requirements.
296-806-20050 Make sure restraint or pullback devices meet these requirements.
296-806-20052 Make sure two-hand devices meet these requirements.
296-806-20054 Make sure devices used with barrier guards meet these requirements.

DISTANCE

296-806-20056 Make sure safeguarding by distance meets these requirements.
296-806-20058 Make sure guardrails used for safeguarding meet these requirements.

REQUIREMENTS FOR SPECIFIC MACHINE HAZARDS

296-806-30002 Fit arbors and mandrels to the machine.
296-806-30004 Safeguard belt and rope drives.
296-806-30006 Make sure belt or rope drives meet these requirements.
296-806-30008 Protect employees while shifting belts on belt and pulley drives.
296-806-30010 Make sure belt tighteners meet these requirements.
296-806-30012 Safeguard cams, connecting rods, tail rods, and extension piston rods.
296-806-30014 Safeguard chain and sprocket drives.
296-806-30016 Safeguard fan blades.

FLYWHEELS

296-806-30018 Safeguard flywheels.
296-806-30020 Safeguard gears.
296-806-30022 Safeguard projections on moving parts.
296-806-30024 Safeguard pulleys.
296-806-30026 Make sure pulleys meet these requirements.
296-806-30028 Safeguard revolving drums, barrels, and containers.
296-806-30030 Safeguard shafting.
296-806-30032 Make sure shafting meets these requirements.
296-806-30034 Safeguard unused keyways.
296-806-30036 Make sure revolving collars meet these requirements.
296-806-30038 Safeguard counterweights.

ADDITIONAL REQUIREMENTS FOR SOME MACHINES AND MACHINE OPERATIONS

296-806-400 Summary.

ABRASIVE WHEELS

296-806-405 Summary.
296-806-40502 Make sure abrasive wheels and machines are properly designed and constructed.
296-806-40504 Make sure machines have safety guards.
296-806-40506 Make sure safety guards meet specific requirements.
296-806-40508 Provide a tongue guard on bench, pedestal, floorstand, and cylindrical grinders.
296-806-40510 Use a work rest for off-hand grinding.
296-806-40512 Make sure abrasive wheels are safe to use.
296-806-40514 Mount wheels properly.
296-806-40516 Use proper flanges.
296-806-40518 Make sure flanges are in good condition.
296-806-40520 Use specific flanges for Type 1 cutting-off wheels.
296-806-40522 Use specific flanges for Type 27A cutting-off wheels.
296-806-40524 Use blotters when required.
296-806-40526 Meet specific blotter requirements when using modified Types 6 and 11 wheels (terrazzo).

Calenders

296-806-410 Summary.
296-806-41002 Provide calender safety controls.
296-806-41004 Follow these stopping limit requirements for calenders.

COMPACTORS

296-806-415 Summary.
296-806-41502 Safeguard hazardous moving parts of stationary compactors.
296-806-41504 Follow these requirements for compactor controls.
296-806-41506 Follow these requirements for compactor access doors and covers.
296-806-41508 Follow these requirements for compactors that cycle automatically.

CONVEYORS

296-806-420 Summary.

GENERAL REQUIREMENTS FOR CONVEYORS

296-806-42002 Follow these requirements for conveyors.
296-806-42004 Provide emergency stops on conveyors.
296-806-42006 Label conveyor controls.
296-806-42008 Prohibit riding on conveyors.
296-806-42010 Provide safe access to conveyors.
296-806-42012 Provide backstop or antirunaway devices on incline, decline, or vertical conveyors.
296-806-42014 Make only safe alterations to conveyors.

296-806-42016 Inspect and replace worn conveyor parts.
296-806-42018 Follow these requirements for replacing conveyor parts.
296-806-42020 Follow these requirements for spill guards.
296-806-42022 Provide pedestrian overpasses for conveyors.
296-806-42024 Guard openings to hoppers and chutes.
296-806-42026 Install guideposts.

BELT CONVEYORS

296-806-42028 Guard nip points on belt conveyors.
296-806-42030 Install emergency stop controllers on overland belt conveyors.
296-806-42032 Install belt conveyor overpasses.

CHAIN CONVEYORS

296-806-42034 Safeguard chain conveyors.
296-806-42036 Guard return strands on chain conveyors.
296-806-42038 Guard chain conveyors that are used as a transfer mechanism.

ELEVATOR CONVEYORS

296-806-42040 Prevent material from falling off of elevator conveyors.

INCLINED RECIPROCATING CONVEYORS (SHAKERS)

296-806-42042 Provide protection where employees must load shakers.
296-806-42044 Provide grating over silo and bunker openings for shuttle conveyors.

MOBILE CONVEYORS

296-806-42046 Guard wheels and rails on mobile conveyors.
296-806-42048 Prevent hazardous motion on mobile conveyors.
296-806-42050 Provide a detector for mobile conveyors.
296-806-42052 Provide safe access on mobile conveyors.

PUSHER-BAR CONVEYORS

296-806-42054 Guard pusher-bar conveyors.

ROLLER CONVEYORS

296-806-42056 Prohibit walking on roller-type conveyors.
296-806-42058 Use speed controls for roller and wheel conveyors.
296-806-42060 Safeguard belt-driven live roller conveyors.

SCREW CONVEYORS

296-806-42062 Guard screw conveyors.

SKIP HOISTS

296-806-42064 Provide slack-cable switches on hoists.
296-806-42066 Block the skip bucket and counterweight guides.
296-806-42068 Protect against wire rope coming off sheaves.

SLAT AND ROLLER-SLAT CONVEYORS

296-806-42070 Safeguard slat and roller-slat conveyors.

TOWED CONVEYORS

296-806-42072 Provide a safe method for disengaging the tow pin.
296-806-42074 Protect employees from moving carts on towed conveyors.
296-806-42076 Provide clearances and warnings for carts on towed conveyors.
296-806-42078 Mark projections above the floor.

FOOD PROCESSING EQUIPMENT

296-806-425 Summary.

FACILITIES

296-806-42502 Provide locks on chamber doors of large air conditioning units.
296-806-42504 Use proper door locks on rack-type bread coolers.
296-806-42506 Provide see-through panels on fermentation room doors.
296-806-42508 Cover exposed hot pipes.
296-806-42510 Provide extension piping on stationary lubrication fittings.
296-806-42512 Provide hoods for pan-washing tanks.
296-806-42514 Safeguard proof boxes.
296-806-42516 Safeguard storage bins.

MATERIAL HANDLING

296-806-42518 Follow these design requirements for bag lifts (bag arm elevators) and chutes.
296-806-42520 Follow these requirements for chain tackle.
296-806-42522 Safeguard conveyors.
296-806-42524 Use properly designed covers for screw conveyors (augers).
296-806-42526 Safeguard pallet jacks and hand trucks.

SPECIFIC FOOD PROCESSING EQUIPMENT

296-806-42528 Safeguard bakery slicers.
296-806-42530 Safeguard bakery wrapping machines.
296-806-42532 Provide troughs with antifriction-bearing casters.
296-806-42534 Follow these requirements for trough hoists and similar equipment.
296-806-42536 Follow these requirements for dividers.
296-806-42538 Safeguard manually-fed dough and cross-roll brakes.
296-806-42540 Provide a guard or tripping device on reversible dough brakes.
296-806-42542 Follow these requirements for doughnut machines.
296-806-42544 Follow these requirements for dumpbins and blenders.
296-806-42546 Follow these requirements for flour-handling machines.
296-806-42548 Follow these requirements for traveling or track-type flour scales.
296-806-42550 Follow these requirements for food grinders and cutters.
296-806-42552 Provide covers with interlocks on ingredient premixers, emulsifiers, and similar machines.
296-806-42554 Follow these requirements for open fat kettles.
296-806-42556 Follow these requirements for steam kettles.
296-806-42558 Follow these requirements for chocolate melting, refining, and mixing kettles.
296-806-42560 Safeguard meat-processing equipment (circular meat-cutting saws).
296-806-42562 Follow these requirements for horizontal dough mixers.
296-806-42564 Follow these requirements for vertical mixers.
296-806-42566 Follow these requirements for mechanical-feed moulders.
296-806-42568 Follow these requirements for hand-fed moulders.
296-806-42570 Design, install, and construct your ovens according to these requirements.
296-806-42572 Properly locate emergency "stop" buttons and main shut off valves for ovens.
296-806-42574 Inspect and test safety devices on ovens.
296-806-42576 Follow these requirements for peanut-cooling trucks.
296-806-42578 Follow these requirements for pretzel-rolling, pretzel stick extruding, rotary, and die machines.
296-806-42580 Safeguard box and roll-type dough sheeters.
296-806-42582 Provide proper enclosures for sifters.
296-806-42584 Follow these requirements for sugar and spice pulverizers.

FORGING MACHINES

296-806-430 Summary.

GENERAL REQUIREMENTS FOR FORGING

296-806-43002 Follow these safety requirements when using lead and lead casts.
296-806-43004 Properly inspect and maintain forging equipment.
296-806-43006 Use safety blocks on hammers and presses.
296-806-43008 Make sure tongs meet these requirements.
296-806-43010 Protect employees when removing scale.
296-806-43012 Provide adequate foundations for hammers and presses.
296-806-43014 Follow these requirements for manually operated valves and switches.

HAMMERS

296-806-43016 Use die keys and shims made of proper-grade material.
296-806-43018 Provide a safety cylinder head.
296-806-43020 Provide a shutoff valve.
296-806-43022 Provide a means for cylinder draining.
296-806-43024 Follow these requirements for pressure pipes.
296-806-43026 Follow these requirements when using board hammers.

OTHER FORGE FACILITY EQUIPMENT

296-806-43028 Protect against sparks from saws.

GARBAGE (WASTE) DISPOSALS

296-806-435 Summary.
296-806-43502 Safeguard garbage (waste) disposal equipment.

GLUE SPREADERS

296-806-440 Summary.
296-806-44002 Provide guards and automatic shutoffs on glue spreaders.

IRONWORKERS

296-806-445 Summary.

296-806-44502 Safeguard ironworkers point of operation.
296-806-44504 Follow these requirements for adjustable restrictors when safeguarding ironworkers.

LATHES

296-806-450 Summary.

METAL LATHES

296-806-45002 Provide shields or guards on metal lathes for chip or coolant hazards.
296-806-45004 Safeguard work-holding devices (chucks).
296-806-45006 Follow these requirements for chip control and handling.
296-806-45008 Safeguard power-clamping devices.
296-806-45010 Restrain extended workpieces on horizontal lathes.

WOODWORKING LATHES

296-806-45012 Guard cutting heads on profile lathes and swing-head lathes.
296-806-45014 Guard cutting heads on turning lathes.
296-806-45016 Guard automatic turning lathes.
296-806-45018 Guard wood lathes used for turning long pieces of stock.

MECHANICAL POWER PRESSES

296-806-455 Summary.

DESIGN AND CONSTRUCTION

296-806-45502 Make sure mechanical power presses are properly designed and constructed.

SAFEGUARDING

296-806-45504 Safeguard presses that use unitized tooling.
296-806-45506 Protect operators from guidepost hazards.
296-806-45508 Safeguard the point of operation.
296-806-45510 Make sure point-of-operation guards are properly designed and constructed.
296-806-45512 Make sure barrier guards meet these requirements.
296-806-45514 Make sure point-of-operation devices are effective.
296-806-45516 Make sure presence-sensing devices used to safeguard the point of operation meet these requirements.
296-806-45518 Make sure pull-back devices used to safeguard the point of operation meet these requirements.
296-806-45520 Make sure restraint (holdout) devices used to safeguard the point of operation meet these requirements.
296-806-45522 Make sure two-hand control devices used to safeguard the point of operation meet these requirements.
296-806-45524 Make sure two-hand trip devices used to safeguard the point of operation meet these requirements.
296-806-45526 Provide additional safeguards when the operator puts one or both hands into the point of operation.

OPERATIONS

296-806-45528 Establish die setting procedures.
296-806-45530 Handle dies safely.
296-806-45532 Protect die setters during setup and tryout.
296-806-45534 Train press operators.
296-806-45536 Operate mechanical power presses safely.
296-806-45538 Provide tools and other means to protect press operators.
296-806-45540 Inspect and maintain presses.
296-806-45542 Make sure presses and operating practices used in the PSDI (presence sensing device initiation) mode of operation meet these requirements.

MILLS

296-806-460 Summary.
296-806-46002 Meet height requirements for mill rolls.
296-806-46004 Provide mill safety controls.
296-806-46006 Follow these stopping limit requirements for mills.

PRESS BRAKES

296-806-465 Summary.

GENERAL REQUIREMENTS FOR PRESS BRAKES

296-806-46502 Provide auxiliary safety aids on press brakes.
296-806-46504 Safeguard the point of operation on press brakes.

SAFE DISTANCE SAFEGUARDING

296-806-46506 Follow this requirement when using safe distance safeguarding.
296-806-46508 Develop a safe distance safeguarding program for press brakes.
296-806-46510 Follow these requirements for safe distance training for press brakes.
296-806-46512 Require safe distance retraining for press brake operations.
296-806-46514 Conduct periodic safe distance inspections on press brakes.
296-806-46516 Supervise the safe distance program for press brakes.

ROLL-FORMING AND BENDING MACHINES

296-806-470 Summary.
296-806-47002 Follow these requirements for machine initiation.
296-806-47004 Safeguard nip points of roll-forming and bending machines.

SANDING MACHINES

296-806-475 Summary.
296-806-47502 Guard drum sanders.
296-806-47504 Guard disk sanders.
296-806-47506 Guard belt sanders.
296-806-47508 Follow these requirements for feed roll guarding.

SAWS AND CUTTING HEADS

296-806-480 Summary.

GENERAL REQUIREMENTS FOR ALL SAWS AND CUTTING HEADS

296-806-48002 Protect employees using saws and cutting heads.
296-806-48004 Make sure saws and cutting heads are sharpened and tensioned by qualified people.

SAWS

General Requirements for All Saws

296-806-48006 Make sure saws are safe to use.

Requirements for All Circular Saws

296-806-48008 Make sure all circular saws meet these requirements.
296-806-48010 Make sure circular saw gages meet these requirements.
296-806-48012 Safeguard hand-fed circular table saws.
296-806-48014 Provide kickback protection for employees using hand-fed circular table ripsaws when ripping wood products.
296-806-48016 Safeguard self-feed circular saws.
296-806-48018 Provide kickback protection for self-feed circular ripsaws when ripping wood products.
296-806-48020 Guard circular resaws.
296-806-48022 Provide spreaders for circular resaws.

Requirements for Specific Circular Saws

296-806-48024 Protect employees from automatic saw hazards.
296-806-48026 Guard inverted swing (jump) saws.
296-806-48028 Guard miter saws.
296-806-48030 Guard radial saws.
296-806-48032 Limit the travel of radial saws.
296-806-48034 Provide kickback protection for radial saws used for ripping wood products.
296-806-48036 Guard revolving double arbor saws.
296-806-48038 Guard swing saws.
296-806-48040 Limit the travel of swing saws.

Requirements for Band Saws and Drag Saws

296-806-48042 Make sure band saws meet these requirements.
296-806-48044 Protect employees from drag saw hazards.

CUTTING HEADS

General Requirements for All Cutting Heads

296-806-48046 Maintain and balance knives and cutting heads.

BORING AND MORTISING MACHINES

296-806-48048 Make sure boring and mortising machines meet these requirements.

CHIPPER AND HOG MILLS

296-806-48050 Follow these requirements for chipper mills.
296-806-48052 Follow these requirements for hog mills.
296-806-48054 Protect employees from falling into chipper and hog mills.

JOINTERS

296-806-48056 Make sure jointers with horizontal cutting heads meet these requirements.
296-806-48058 Guard horizontal cutting heads on hand-fed jointers.
296-806-48060 Guard vertical cutting heads on jointers.

MOLDING, STICKING AND MATCHING MACHINES

296-806-48062 Make sure molding, sticking and matching machines meet these requirements.

PANEL RAISERS AND OTHER SIMILAR MACHINES

296-806-48064 Guard hand-fed panel raisers and other similar machines.

PLANERS

296-806-48066 Make sure planers with a horizontal cutting head meet these requirements.
296-806-48068 Guard planers.
296-806-48070 Guard planer feed rolls.
296-806-48072 Provide kickback protection on planers running stock of varied thicknesses.

SHAPERS

296-806-48074 Make sure shapers meet these requirements.

TENONING MACHINES

296-806-48076 Guard tenoning machine feed chains and sprockets.
296-806-48078 Guard tenoning machines.

VENEER MACHINES

296-806-48080 Guard veneer cutters and wringer knives.
296-806-48082 Guard veneer clippers.
296-806-48084 Follow these requirements for guarding guillotine cutters.
296-806-48086 Provide mechanisms to stop power-driven guillotine cutters.
296-806-48088 Prohibit riders on veneer slicer carriages.

SEWING MACHINES

296-806-485 Summary.
296-806-48502 Guard sewing machine needles.
296-806-500 Definitions.

WAC 296-806-100 Scope. Machines and their moving parts create the potential for workplace injuries. Installed and used properly safeguards can protect workers by helping to reduce or control machine hazards.

This chapter applies if you have machines or machine operations in your workplace. For requirements on hand-held tools go to Portable power tools, chapter 296-807 WAC.

[Statutory Authority: RCW 49.17.010, 49.17.040, 49.17.050, and 49.17.060. 04-14-028, § 296-806-100, filed 6/29/04, effective 1/1/05.]

REQUIREMENTS FOR ALL MACHINES

WAC 296-806-200 Summary. This section applies to all machines in your workplace. It is organized into the following four categories:

- General requirements.
- Safeguarding requirements.
- Safeguarding methods.
- Requirements for specific machine hazards.

Reference:
- In addition to the requirements in this section, you need to refer to the following sections of this chapter in order to determine if additional requirements are listed for machines or operations in your workplace:
  - Additional requirements for some machines and machine operations, WAC 296-806-400.
- For requirements that apply to hand-held tools, see Portable power tools, chapter 296-807 WAC.

Your responsibility:

To protect employees from machine hazards in your workplace.

You must:

GENERAL REQUIREMENTS

WORKPLACE

Secure machines designed to stay in one place
WAC 296-806-20002.

Protect employees from slipping hazards around machinery
WAC 296-806-20004.

Arrange work areas to avoid creating hazards
WAC 296-806-20006.

MACHINE CONTROLS AND OPERATION

Make sure operating controls meet these requirements
WAC 296-806-20008.

Protect employees from unintentional machine operation
WAC 296-806-20010.

Make sure emergency stop controls meet these requirements
WAC 296-806-20012.

Control machine vibration
WAC 296-806-20014.

Prevent overspeed conditions
WAC 296-806-20016.

Make sure hand feeding and retrieval tools meet these requirements
WAC 296-806-20018.

Protect employees who are adjusting or repairing machinery
WAC 296-806-20020.

POWER TRANSMISSION PARTS

Keep power transmission parts in good working condition
WAC 296-806-20022.

Inspect power transmission parts
WAC 296-806-20024.

Protect employees lubricating moving machinery
WAC 296-806-20026.

SAFEGUARDING REQUIREMENTS

SAFEGUARD MACHINERY

Safeguard employees from the point of operation
WAC 296-806-20028.

Safeguard employees from nip or shear point hazards
WAC 296-806-20030.

Safeguard employees from rotating or revolving parts
WAC 296-806-20032.

Safeguard employees from reciprocating or other moving parts
WAC 296-806-20034.

Safeguard employees from flying objects
WAC 296-806-20036.

Safeguard employees from falling objects
WAC 296-806-20038.

Safeguard employees from hazards created by moving surfaces with hazards such as sharp edges, burrs, and protruding nails and bolts
WAC 296-806-20040.

SAFEGUARDING METHODS

Guards

Make sure guards meet these requirements
WAC 296-806-20042.

Devices

Make sure devices meet these requirements

WAC 296-806-20044.
Make sure light curtains meet these requirements
WAC 296-806-20046.
Make sure pressure-sensitive mats meet these requirements
WAC 296-806-20048.
Make sure restraint or pullback devices meet these requirements
WAC 296-806-20050.
Make sure two-hand devices meet these requirements
WAC 296-806-20052.
Make sure devices used with barrier guards meet these requirements
WAC 296-806-20054.
Distance
Make sure safeguarding by distance meets these requirements
WAC 296-806-20056.
Make sure guardrails used for safeguarding meet these requirements
WAC 296-806-20058.
REQUIREMENTS FOR SPECIFIC MACHINE HAZARDS
Fit arbors and mandrels to the machine
WAC 296-806-30002.
Safeguard belt and rope drives
WAC 296-806-30004.
Make sure belt or rope drives meet these requirements
WAC 296-806-30006.
Protect employees while shifting belts on belt and pulley drives
WAC 296-806-30008.
Make sure belt tighteners meet these requirements
WAC 296-806-30010.
Safeguard cams, connecting rods, tail rods, and extension piston rods
WAC 296-806-30012.
Safeguard chain and sprocket drives
WAC 296-806-30014.
Safeguard fan blades
WAC 296-806-30016.
Safeguard flywheels
WAC 296-806-30018.
Safeguard gears
WAC 296-806-30020.
Safeguard projections on moving parts
WAC 296-806-30022.
Safeguard pulleys
WAC 296-806-30024.
Make sure pulleys meet these requirements
WAC 296-806-30026.
Safeguard revolving drums, barrels, and containers
WAC 296-806-30028.
Safeguard shafting
WAC 296-806-30030.
Make sure shafting meets these requirements
WAC 296-806-30032.
Safeguard unused keyways
WAC 296-806-30034.
Make sure revolving collars meet these requirements
WAC 296-806-30036.
Safeguard counterweights
WAC 296-806-30038.

[Statutory Authority: RCW 49.17.010, 49.17.040, 49.17.050, and 49.17.060. 04-14-028, § 296-806-200, filed 6/29/04, effective 1/1/05.]

WORKPLACE

WAC 296-806-20002 Secure machines designed to stay in one place.

You must:

• Make sure machines designed to stay in one place are secured so they will not move or change position during use.

Exemption: Machines that have either rubber feet or foot pads made of nonskid (high coefficient of friction) or similar vibration dampening materials do not have to be secured as long as the machine will not tip, fall over, or walk (move).

[Statutory Authority: RCW 49.17.010, 49.17.040, 49.17.050, and 49.17.060. 04-14-028, § 296-806-20002, filed 6/29/04, effective 1/1/05.]

WAC 296-806-20004 Protect employees from slipping hazards around machinery.

You must:

• Make sure employees working around dangerous machines are protected from slipping on smooth, oily, or otherwise slippery floors by providing one of the following types of floor covering:

– Nonslip matting.
– Grating.
– Nonslip composition flooring.
– Some other effective floor treatment.

Reference: For additional requirements about housekeeping, personal protective equipment (PPE), and work practices, see the Safety and health core rules, chapter 296-800 WAC.

[Statutory Authority: RCW 49.17.010, 49.17.040, 49.17.050, and 49.17.060. 04-14-028, § 296-806-20004, filed 6/29/04, effective 1/1/05.]

WAC 296-806-20006 Arrange work areas to avoid creating hazards.

You must:

• Make sure work areas around machinery are designed with enough space so each operator:

– Can clean and handle material without interference from other workers or machines.

– Does **not** have to stand in the way of passing traffic.

• Provide enough space so employees can bring in and remove materials safely.

Reference: For requirements that apply to Aisles and passageways, see WAC 296-24-73505.

[Statutory Authority: RCW 49.17.010, 49.17.040, 49.17.050, and 49.17.060. 04-14-028, § 296-806-20006, filed 6/29/04, effective 1/1/05.]

MACHINE CONTROLS AND OPERATIONS

WAC 296-806-20008 Make sure operating controls meet these requirements.

Exemption: This rule does not apply to constant pressure controls used only for setup.

You must:

(1) Make sure each machine has a control that both:

• Stops the machine;

AND

• Can be reached by the operator without leaving the operator's position.

(2) Make sure the operator can easily reach all machine controls without reaching into a hazard area of the machine.

[Statutory Authority: RCW 49.17.010, 49.17.040, 49.17.050, and 49.17.060. 04-14-028, § 296-806-20008, filed 6/29/04, effective 1/1/05.]

WAC 296-806-20010 Protect employees from unintentional machine operation.

You must:

(1) Make sure foot-operated controls are located or guarded so that unintentional movement to the "ON" position is unlikely.

(2) Make sure machines will **not** automatically restart when power is restored after a power failure, if restarting would create a hazard for employees.

Note: Operating controls can be protected from unintentional movement by methods such as covers on foot treadles and collars around machinery start buttons.

[Statutory Authority: RCW 49.17.010, 49.17.040, 49.17.050, and 49.17.060. 04-14-028, § 296-806-20010, filed 6/29/04, effective 1/1/05.]

WAC 296-806-20012 Make sure emergency stop controls meet these requirements.

You must:

• Make sure emergency stop controls, if required, meet **all** the following:

– Are red in color.

– Are easily reached from the operator's normal work position.

– Are kept in a good working condition.

– Have to be manually reset before a machine can be restarted.

[Statutory Authority: RCW 49.17.010, 49.17.040, 49.17.050, and 49.17.060. 04-14-028, § 296-806-20012, filed 6/29/04, effective 1/1/05.]

WAC 296-806-20014 Control machine vibration.

You must:

• Prevent excessive machine vibration that could create a hazard to employees.

[Statutory Authority: RCW 49.17.010, 49.17.040, 49.17.050, and 49.17.060. 04-14-028, § 296-806-20014, filed 6/29/04, effective 1/1/05.]

WAC 296-806-20016 Prevent overspeed conditions.

You must:

• Operate tools and equipment within their rated speed.

Note: Actions that could cause an overspeed condition include:
- Installing a more powerful motor.
- Changing or increasing the power source.
- Changing attachment size or type, such as a blade or wheel.
  - The attachment speed (rpm) and motor speed (rpm) should match.

[Statutory Authority: RCW 49.17.010, 49.17.040, 49.17.050, and 49.17.060. 04-14-028, § 296-806-20016, filed 6/29/04, effective 1/1/05.]

WAC 296-806-20018 Make sure hand feeding and retrieval tools meet these requirements.

You must:

• Make sure hand feeding and retrieval tools:

– Are suitable for the work to be done.

– Do not create a hazard when used.

– Are of a size and shape that will keep the operator's hands outside the hazardous area.

– Are constructed so they will not shatter if they come in contact with the machine tool or tooling.

Note: Hand feeding and retrieval tools, such as push sticks or push blocks, can **not** be used instead of required safeguarding, unless a specific machine requirement allows it.

[Statutory Authority: RCW 49.17.010, 49.17.040, 49.17.050, and 49.17.060. 04-14-028, § 296-806-20018, filed 6/29/04, effective 1/1/05.]

WAC 296-806-20020 Protect employees who are adjusting or repairing machinery.

Exemption: This rule does not apply if the machine has to be in motion to properly adjust it.

You must:

• Make sure power-driven machinery is completely stopped before **either:**

– Making adjustments or repairs;

OR

– Removing material or refuse from the machine.

Reference: For requirements about maintaining and servicing machinery where the unexpected start-up, energization, or release of stored energy could injure an employee are in Lockout/tagout (control of hazardous energy), chapter 296-803 WAC.

[Statutory Authority: RCW 49.17.010, 49.17.040, 49.17.050, and 49.17.060. 04-14-028, § 296-806-20020, filed 6/29/04, effective 1/1/05.]

POWER TRANSMISSION PARTS

WAC 296-806-20022 Keep power transmission equipment in good working condition.

Definition:

A power transmission part is a mechanical component of a system that provides motion to a part of a machine or piece of equipment.

You must:

• Make sure power transmission parts are kept in good working condition at **all** times.

• Keep bearings free from lost motion and well lubricated.

[Statutory Authority: RCW 49.17.010, 49.17.040, 49.17.050, and 49.17.060. 04-14-028, § 296-806-20022, filed 6/29/04, effective 1/1/05.]

WAC 296-806-20024 Inspect power transmission parts.

You must:

• Inspect power transmission parts **at least** once every sixty days to make sure that all:

– Safeguarding meets the requirements of this chapter.

– Parts are in proper alignment.

– Bolts and screws that hold power transmission parts together or support the system are tight.

[Statutory Authority: RCW 49.17.010, 49.17.040, 49.17.050, and 49.17.060. 04-14-028, § 296-806-20024, filed 6/29/04, effective 1/1/05.]

WAC 296-806-20026 Protect employees lubricating moving machinery.

You must:

(1) Protect employees who lubricate moving machinery by:

• Providing tools, such as oil cans or grease guns, that have spouts or necks that are long enough to keep the employees' hands out of hazardous areas.

• Requiring employees to wear closely fitted clothing.

Note: Things such as clothing, hair, and jewelry can get caught in machinery and be a hazard on the job.

You must:

(2) Make sure drip cups and pans are securely fastened to the machinery.

[Statutory Authority: RCW 49.17.010, 49.17.040, 49.17.050, and 49.17.060. 04-14-028, § 296-806-20026, filed 6/29/04, effective 1/1/05.]

SAFEGUARDING REQUIREMENTS

WAC 296-806-20028 Safeguard employees from the point of operation.

IMPORTANT:

If a specific safeguarding method in this chapter is required for machinery or machine parts found in your workplace, follow the specific requirement.

In the absence of a specific safeguarding method required by this or some other chapter, you need to choose a method or combination of methods from the safeguarding requirements found in Safeguarding methods, WAC 296-806-20042 through 296-806-20058. Examples of safeguarding methods include:

• Guards.

• Devices.

• Safeguarding by distance.

• Safeguarding by location.

You must:

• Protect employees from hazards created by the point of operation by using one or more safeguarding methods.

[Statutory Authority: RCW 49.17.010, 49.17.040, 49.17.050, and 49.17.060. 04-14-028, § 296-806-20028, filed 6/29/04, effective 1/1/05.]

WAC 296-806-20030 Safeguard employees from nip or shear point hazards.

You must:

• Protect employees from hazards created by nip or shear points by using one or more safeguarding methods.

[Statutory Authority: RCW 49.17.010, 49.17.040, 49.17.050, and 49.17.060. 04-14-028, § 296-806-20030, filed 6/29/04, effective 1/1/05.]

WAC 296-806-20032 Safeguard employees from rotating or revolving parts.

You must:

• Protect employees from hazards created by rotating or revolving parts by using one or more safeguarding methods.

[Statutory Authority: RCW 49.17.010, 49.17.040, 49.17.050, and 49.17.060. 04-14-028, § 296-806-20032, filed 6/29/04, effective 1/1/05.]

WAC 296-806-20034 Safeguard employees from reciprocating or other moving parts.

You must:

• Protect employees from hazards created by reciprocating or other moving parts by using one or more safeguarding methods.

[Statutory Authority: RCW 49.17.010, 49.17.040, 49.17.050, and 49.17.060. 04-14-028, § 296-806-20034, filed 6/29/04, effective 1/1/05.]

WAC 296-806-20036 Safeguard employees from flying objects.

You must:

• Protect employees from hazards created by flying objects, including chips, sparks, and fluids by using one or more safeguarding methods.

[Statutory Authority: RCW 49.17.010, 49.17.040, 49.17.050, and 49.17.060. 04-14-028, § 296-806-20036, filed 6/29/04, effective 1/1/05.]

WAC 296-806-20038 Safeguard employees from falling objects.

You must:

• Protect employees from hazards created by falling objects by using one or more safeguarding methods.

[Statutory Authority: RCW 49.17.010, 49.17.040, 49.17.050, and 49.17.060. 04-14-028, § 296-806-20038, filed 6/29/04, effective 1/1/05.]

WAC 296-806-20040 Safeguard employees from moving surfaces with hazards.

You must:

• Safeguard employees from hazards created by moving surfaces with hazards such as sharp edges, burrs, and protruding nails and bolts.

[Statutory Authority: RCW 49.17.010, 49.17.040, 49.17.050, and 49.17.060. 04-14-028, § 296-806-20040, filed 6/29/04, effective 1/1/05.]

SAFEGUARDING METHODS
Guards

WAC 296-806-20042 Make sure guards meet these requirements.

You must:

• Make sure guards do **not** create additional hazards such as sharp edges or pinch points between the guard and moving machine parts.

• Make sure guards are:

– Made of durable materials.

– Strong enough to withstand the forces to which they are exposed.

– Securely fastened to the machine, if possible, or to the building structure if they cannot be attached to the machine.

• Make sure guards protect employees by doing **both** of the following:

– Preventing hands or other body parts from reaching through, over, under, or around the guard into the hazard area;

AND

– Preventing objects or debris from falling onto or being thrown towards an employee.

• Make sure barrier guards:

– Are properly installed, adjusted, and maintained.

– Have no opening at any point larger than shown in Table 200-1, Largest Allowable Guard Opening.

Reference: Metal cutting shears are allowed to be guarded with properly applied awareness barrier safeguarding as described in ANSI B11.4-1993, Sections 6.3.3.

Table 200-1
Largest Allowable Guard Opening (inches)

If the distance (A) from hazard to the guard is:	Then the opening (B) in the guard or between the table and the guard can NOT be greater than:
1/2 to 1 1/2	1/4
1 1/2 to 2 1/2	3/8
2 1/2 to 3 1/2	1/2
3 1/2 to 5 1/2	5/8
5 1/2 to 6 1/2	3/4
6 1/2 to 7 1/2	7/8
7 1/2 to 12 1/2	1 1/4
12 1/2 to 15 1/2	1 1/2
15 1/2 to 17 1/2	1 7/8
17 1/2 to 31 1/2	2 1/8
Over 31 1/2	6

This diagram illustrates the information found in Table 200-1. The size of the opening in the guard, or between the bottom edge of the guard and the feed table is small enough to prevent any part of the operator's body from reaching the hazardous area.

Illustration #1 - Distance from hazard to Guard (A)

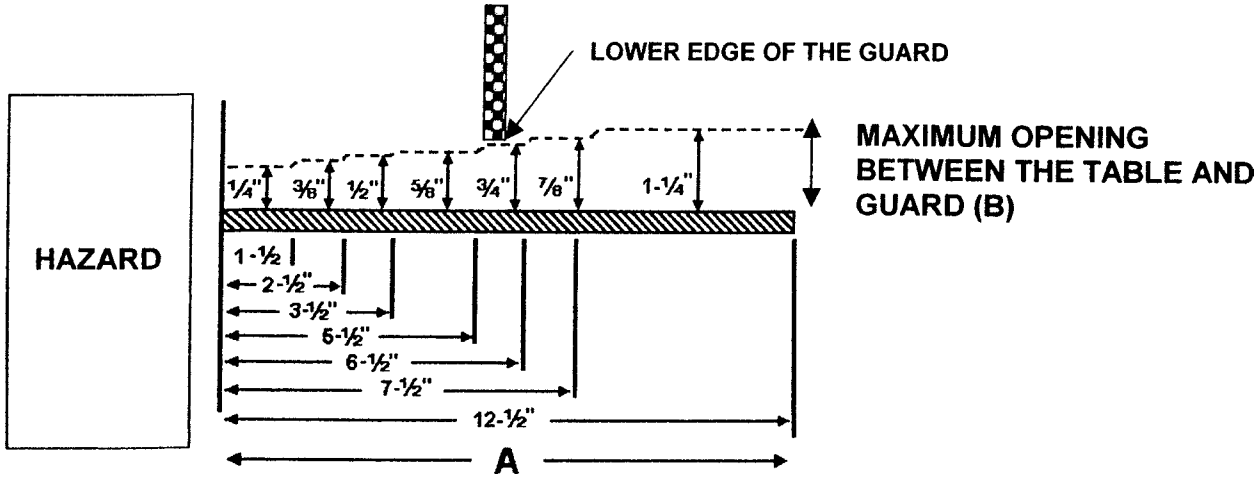

[Statutory Authority: RCW 49.17.010, 49.17.040, 49.17.050, and 49.17.060. 04-14-028, § 296-806-20042, filed 6/29/04, effective 1/1/05.]

DEVICES

WAC 296-806-20044 Make sure devices meet these requirements.

You must:

• Make sure devices used to safeguard employees do either of the following:

– Stop the motion of a moving part before an employee comes in contact with it and has to be manually reset before machines can be restarted;

OR

– Be designed and constructed to prevent the operator from having any part of their body in the danger zone during the hazardous part of the operating cycle.

Reference: For more information on installation of safety devices, see Performance criteria for safeguarding, ANSI B11.19-2003.

[Statutory Authority: RCW 49.17.010, 49.17.040, 49.17.050, and 49.17.060. 04-14-028, § 296-806-20044, filed 6/29/04, effective 1/1/05.]

WAC 296-806-20046 Make sure light curtains meet these requirements.

IMPORTANT:

All devices must meet the general requirements for devices found in, Make sure devices meet these requirements, WAC 296-806-20044.

You must:

• Make sure light curtains, when used:

– Respond to the presence of an operator's hand, other body part, or a work piece.

– Have indicators that are easily seen by the operator showing when the device is functioning or has been bypassed.

Note: Even if a shiny reflective object or work piece is used with a light curtain or other electro-optical device, it should still respond to the operator's hand or other body part.

You must:

• Make sure only authorized persons can make the following adjustments to light curtains:

– Variations in operating conditions.

– Fixed or channel blanking.

– Floating blanking (sometimes referred to as floating channel or floating window features).

• Safeguard access to the point of operation that is **not** protected by light curtains.

Reference: For more information on light curtains and their requirements, see Performance criteria for safeguarding, ANSI B11.19-2003

[Statutory Authority: RCW 49.17.010, 49.17.040, 49.17.050, and 49.17.060. 04-14-028, § 296-806-20046, filed 6/29/04, effective 1/1/05.]

WAC 296-806-20048 Make sure pressure-sensitive mats meet these requirements.

IMPORTANT:

All devices must meet the general requirements for devices found in, Make sure devices meet these requirements, WAC 296-806-2004.

You must:

• Make sure pressure-sensitive mats:

– Detect the presence or absence of the operator or others.

– Send the stop command and prevent successive machine cycles if any single component fails.

– Are connected with the machine control system so the device's stop signal immediately stops action of the machine tool and requires use of the start control before the machine can begin another cycle.

– Are located so that the operator can **not** reach the recognized hazard before hazardous motion has stopped.

– Have an indicator easily seen by the operator that shows the mat is operating.

[Statutory Authority: RCW 49.17.010, 49.17.040, 49.17.050, and 49.17.060. 04-14-028, § 296-806-20048, filed 6/29/04, effective 1/1/05.]

WAC 296-806-20050 Make sure restraint or pullback devices meet these requirements.

IMPORTANT:

All devices must meet the general requirements for devices found in, Make sure devices meet these requirements, WAC 296-806-20044.

You must:

• Make sure restraint or pullback devices:

– Prevent the operator from reaching into the point of operation or withdraw the operator's hands from the point of operation before motion of the machine creates a hazard.

– Have fasteners, pins, and other items used to secure and maintain the setting of the device applied in a way that minimizes loosening, slipping, or failure during use.

– Are worn inside gloves, if used, so if a glove becomes trapped inside a machine or tool, the device can still remove the operator's hand from the hazard area.

[Statutory Authority: RCW 49.17.010, 49.17.040, 49.17.050, and 49.17.060. 04-14-028, § 296-806-20050, filed 6/29/04, effective 1/1/05.]

WAC 296-806-20052 Make sure two-hand devices meet these requirements.

IMPORTANT:

All devices must meet the general requirements for devices found in, Make sure devices meet these requirements, WAC 296-806-20044.

You must:

• Make sure two-hand devices:

– Protect each hand device against accidental operation.

– Require simultaneous operation of both hand devices to begin the cycle, including the first cycle (automatic mode).

– Are provided with an antirepeat feature when used in single cycle mode.

– Have a set of devices for each operator if more than one needs to be safeguarded.

– Are located far enough from the nearest hazard so the operator can **not** reach the hazard before hazardous motion stops.

Reference: For more information on proper installation of safety devices, see Performance criteria for safeguarding, ANSI B11.19-2003.

[Statutory Authority: RCW 49.17.010, 49.17.040, 49.17.050, and 49.17.060. 04-14-028, § 296-806-20052, filed 6/29/04, effective 1/1/05.]

WAC 296-806-20054 Make sure devices used with barrier guards meet these requirements.

IMPORTANT:

All devices must meet the general requirements for devices found in, Make sure devices meet these requirements, WAC 296-806-20044.

You must:

• Make sure movable barrier devices:

– Return to the open position if they encounter an obstruction while enclosing the hazardous area.

– Are designed so the operator or others cannot reach the hazard by reaching over, under, around or through the device when it is in the closed position.

• Make sure interlocks used with barrier guards do **all** of the following:

– Stop hazardous motion of machines when interlocks are open.

– Are **not** easily bypassed.

– Are designed and installed so that closing the interlocks will not cause a hazard to employees.

[Statutory Authority: RCW 49.17.010, 49.17.040, 49.17.050, and 49.17.060. 04-14-028, § 296-806-20054, filed 6/29/04, effective 1/1/05.]

DISTANCE

WAC 296-806-20056 Make sure safeguarding by distance meets these requirements.

You must:

• Make sure means used to safeguard by distance do both of the following:

– Prevent parts or material from falling on employees below;

AND

– Separate employees on fixed ladders, stairs, floors, or other walking or working surfaces from the hazard by:

■ More than seven feet vertically;

OR

■ A horizontal distance that prevents employees from contacting or being injured by the hazard according to the distances in Table 200-2.

TABLE 200-2
SAFE DISTANCES FROM FIXED BARRIERS TO HAZARDS

Table 200-2 helps you identify either the required horizontal distance from the hazard to the barricade (B), or the required height of the barricade (C), as long as you know A and either variable, B or C.

Table 200-2
Safe Distances for Fixed Barricades (B)

Height of the Hazard (A)	Height of the Barricade (C)							
	96	86	78	71	63	55	48	40
96	0	4	4	4	4	4	4	4
86	. . . .	10	14	16	20	20	24	24
78	. . . .	. . . .	14	20	24	28	36	43
71	. . . .	. . . .	. . . .	24	36	36	40	43
63	. . . .	. . . .	. . . .	20	36	36	40	51
55	. . . .	. . . .	. . . .	4	32	36	40	51
48	. . . .	. . . .	. . . .	. . . .	20	36	40	55
40	. . . .	. . . .	. . . .	. . . .	12	36	40	55
32	. . . .	. . . .	. . . .	. . . .	. . . .	24	36	51
24	. . . .	. . . .	. . . .	. . . .	. . . .	. . . .	20	48
16	. . . .	. . . .	. . . .	. . . .	. . . .	. . . .	12	48
8	. . . .	. . . .	. . . .	. . . .	. . . .	. . . .	8	43

Note: The height and distance requirements of Table 200-2 are designed to safeguard workers from a fixed hazard. If a hazard involves flying chips, fluids, parts or materials, the barrier height, distance, and construction may need to be adjusted to provide adequate protection.

Illustration 2 - How to measure variables for Table 2

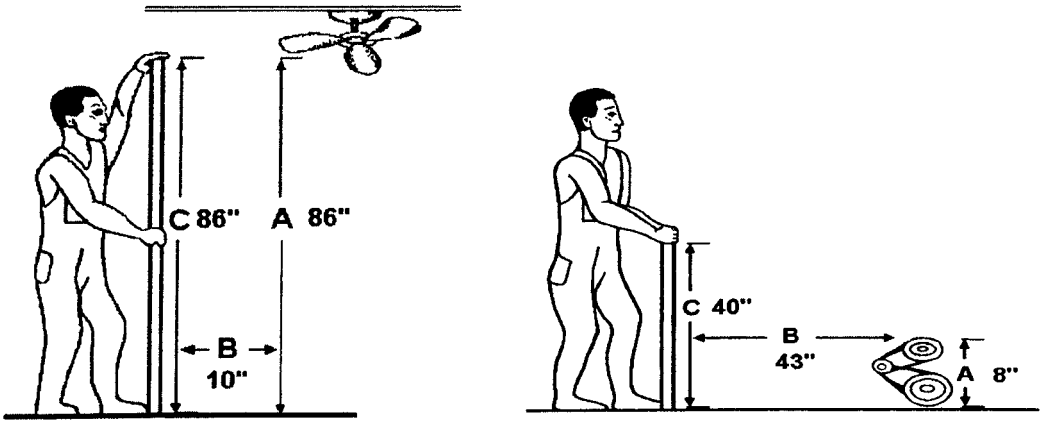

Examples:

• If the height of the hazard (A) is seventy-eight inches, and the horizontal distance from the hazard to the barricade (B) is fourteen inches, the required height of the barricade (C) is seventy-eight inches.

• If the height of the hazard (A) is eighty-six inches, and the height of the barricade (C) is fifty-five inches, then the required horizontal distance from the hazard to the barricade (B) is twenty inches.

[Statutory Authority: RCW 49.17.010, 49.17.040, 49.17.050, and 49.17.060. 04-14-028, § 296-806-20056, filed 6/29/04, effective 1/1/05.]

WAC 296-806-20058 Make sure guardrails used for safeguarding meet these requirements.

Note: Guardrails may be used to safeguard:
- Flywheels.
- Cranks and connecting rods.
- Tail rods and extension piston rods.
- Horizontal belts in a power generating room.
- Clutches, cutoff couplings, or clutch pulleys in an engine room occupied only by an attendant.
- Power transmission parts on a runway used only for oiling, maintenance, running adjustment, or repair work.

You must:

• Make sure top rails are:

– Smooth-surfaced.

– Strong enough to withstand a force of at least two hundred pounds.

– Between thirty-nine and forty-five inches above the floor, platform, runway, or ramp.

• Make sure guardrails have an intermediate rail (mid-rail) installed approximately halfway between the top rail and the floor, platform, runway, or ramp.

• Make sure rails do not extend beyond the end posts of the guardrail and create a projection hazard.

• Make sure toe boards, if required by this chapter to safeguard a machinery hazard, are:

– At least four inches high.

– Securely fastened in place with no more than one-fourth inch between the bottom of the toe board and the floor, platform, runway, or ramp.

– Made of substantial material that is either solid or that has openings in the material no larger than one inch.

[Statutory Authority: RCW 49.17.010, 49.17.040, 49.17.050, and 49.17.060. 04-14-028, § 296-806-20058, filed 6/29/04, effective 1/1/05.]

REQUIREMENTS FOR SPECIFIC MACHINE HAZARDS

WAC 296-806-30002 Fit arbors and mandrels to the machine.

You must:

• Make sure that arbors and mandrels:

– Have firm and secure bearing.

– Are free from play.

• Only place or mount attachments on a machine arbor that have been accurately machined to the correct size and shape.

[Statutory Authority: RCW 49.17.010, 49.17.040, 49.17.050, and 49.17.060. 04-14-028, § 296-806-30002, filed 6/29/04, effective 1/1/05.]

WAC 296-806-30004 Safeguard belt and rope drives.

Exemption:
- You do not need to safeguard the following types of belts when they are operating at two hundred and fifty linear feet per minute or less:
  - Flat belts that are:
    - One inch wide or less.
    - Two inches wide or less and have no metal lacings or fasteners.
  - Round belts one-half inch or less in diameter.
  - Single-strand v-belts 13/32 inch wide or less.
- You do not need to safeguard belts that are in a room, vault, or similar space that contains only power transmission parts or equipment if the space:
  - Is controlled by lock and key or has similarly restricted access that allows only authorized persons to enter.
  - Is well lit.
  - Has a dry, level, and firm floor.
  - Has a well-marked route with a vertical clearance of at least five feet six inches for authorized employees to follow to perform their duties.
- You do not need to safeguard belt drives of light or medium duty sewing machines if **all** of the following apply:
  - It uses either a flat or a round belt without metal lacings and fasteners.
  - The belt is located above the table top.
  - The table top is designed so that employees near the machine are not exposed to motion hazards while they work or as they pass by.
  - The machine is not used to sew heavy materials such as leather, canvas, denim, or vinyl.
  - The operators' hands are not in, near, or on the wheel, nip point, belt area, or other motion hazard when the machine is operating.

Reference: You may need to follow additional requirements for sewing machines. See, Sewing machines, WAC 296-806-485, later in this chapter for more information.

You must:

• Safeguard belt or rope drives that are seven feet or less above the floor or working surface.

Reference: In the absence of a specific safeguarding method, follow the safeguarding requirements found in safeguarding methods, WAC 296-806-20042 through 296-806-20058. Examples of safeguarding methods include:
- Guards.
- Devices.
- Safeguarding by distance.
- Safeguarding by location.

Note: You may use a nip point and pulley guard on a vertical or inclined belt if it meets **all** of the following requirements:
- Two and one-half inches wide or less.
- Running at a speed of less than one thousand feet per minute.
- Free from metal lacings or fastenings.

You must:

• Safeguard overhead belts located more than seven feet above the floor or working surface if **any of the following** apply:

– The belt is located over a passageway or work space and travels at a speed of eighteen hundred feet per minute or more.

– The distance between the centers of its pulleys is ten feet or more.

– The belt is wider than eight inches.

• Safeguard the space between the upper and lower runs of a horizontal belt if there is enough room for an employee to pass between them by providing both:

– A guard along the upper run to keep the belt from contacting the worker or anything they may be carrying;

AND

– A platform over the lower run that has a railing that is completely filled in with wire mesh or other filler or by a solid barrier.

Note: The passage between the two belts is considered safeguarded if you completely block it with a guardrail or other barrier.

Exemption: In a power generating room, only the lower run of a horizontal belt has to be safeguarded.

[Statutory Authority: RCW 49.17.010, 49.17.040, 49.17.050, and 49.17.060. 04-14-028, § 296-806-30004, filed 6/29/04, effective 1/1/05.]

WAC 296-806-30006 Make sure belt or rope drives meet these requirements.

You must:

(1) Use an idler when your machine uses a quarter-twist belt that can run in either direction.

(2) Make sure, when it is necessary to apply dressing to moving belts or ropes, that you apply the dressing at a point where the belts or ropes leave the pulley.

(3) Make sure that a belt shifted by hand is **not** fastened with metal or other material that creates a hazard.

(4) Make sure a bearing support that is next to a friction clutch or cutoff coupling has self-lubricating bearings that do not need frequent attention.

(5) Use a substantial belt perch, such as a bracket or roller, when it is not practical to use a loose pulley or idler to keep idle belts away from shafts.

[Statutory Authority: RCW 49.17.010, 49.17.040, 49.17.050, and 49.17.060. 04-14-028, § 296-806-30006, filed 6/29/04, effective 1/1/05.]

WAC 296-806-30008 Protect employees while shifting belts on belt and pulley drives.

Exemption: A belt shifter is not required on a belt and pulley system if:
- It was installed on or before August 17, 1971;

OR
- The belt and pulley drive meets **all** of these requirements:
  - The belt is endless or laced with rawhide.
  - A nip point guard in front of the cone safeguards the nip point of the belt and pulley.
  - The nip point guard extends at least to the top of the largest step of the cone and is formed to show the contour of the cone.

Definition: A nip point belt and pulley guard is a guard that encloses the pulley and has rounded or rolled edge slots for the belt to pass through.

You must:

(1) Provide a permanent mechanical belt shifter on belt drives that use either:

• Tight and loose (drive and idler) pulleys;

OR

• A cone pulley.

(2) Protect employees from the nip point of the belt and pulley by either:

• The belt shifter or clutch handle;

OR

• A vertical guard in front of the pulley that extends at least to the top of the largest step of the cone.

(3) Make sure a belt shifter or clutch handle is:

• Rounded to keep the operator from being injured.

• Easy to reach.

• Positioned to reduce the chance of being accidentally moved.

• Located either:

– Over the machine;

OR

– Not higher than six feet six inches above the floor.

(4) Make sure each belt shifter or clutch handle of the same type in your workplace moves in the same direction to stop a machine, that is, either all right or all left.

Exemption: A friction clutch handle on a countershaft carrying two clutch pulleys with open and crossed belts is not required to move in the same direction as all other clutch handles or belt shifters if:

- The clutch handle has three positions;

AND

- The machine is at rest when the clutch handle is in the center position.

You must:

(5) Use a belt shifter to shift a belt on and off a fixed pulley.

• When a belt shifter cannot be used, you may use a belt pole if it is both:

– Smooth;

AND

– Large enough to grasp securely.

Note: A belt pole is also known as a "belt shipper" or "shipper pole."

You must:

(6) Provide a locking-type belt shifter or other positive securing device on woodworking machines driven by belts and shafting.

[Statutory Authority: RCW 49.17.010, 49.17.040, 49.17.050, and 49.17.060. 04-14-028, § 296-806-30008, filed 6/29/04, effective 1/1/05.]

WAC 296-806-30010 Make sure belt tighteners meet these requirements.

You must:

• Make sure belt tighteners:

– Are substantially constructed and securely fastened.

– Have bearings that are securely capped.

– Have a mechanism to prevent them from falling.

• Make sure belt tighteners used to activate machinery are securely held in the "OFF" position by either:

– Gravity;

OR

– An automatic mechanism that must be released by hand.

[Statutory Authority: RCW 49.17.010, 49.17.040, 49.17.050, and 49.17.060. 04-14-028, § 296-806-30010, filed 6/29/04, effective 1/1/05.]

WAC 296-806-30012 Safeguard cams, connecting rods, tail rods, and extension piston rods.

You must:

• Safeguard cams, connecting rods, tail rods, or extension piston rods that could be contacted by employees.

Reference: In the absence of a specific safeguarding method, follow the safeguarding requirements found in safeguarding methods, WAC 296-806-20042 through 296-806-20058. Examples of safeguarding methods include:

• Guards.
• Devices.
• Safeguarding by distance.
• Safeguarding by location.

You must:

• Make sure guardrails used to safeguard the side or ends of rods are at least fifteen inches away from the rod when it is fully extended.

[Statutory Authority: RCW 49.17.010, 49.17.040, 49.17.050, and 49.17.060. 04-14-028, § 296-806-30012, filed 6/29/04, effective 1/1/05.]

WAC 296-806-30014 Safeguard chain and sprocket drives.

Exemption: This section does not apply to hand-operated sprockets.

You must:

• Enclose chains and sprocket wheels that are seven feet or less above the floor or working surface.

• Make sure chain and sprocket drive enclosures that extend over machine or other working areas protect workers from falling drive parts.

[Statutory Authority: RCW 49.17.010, 49.17.040, 49.17.050, and 49.17.060. 04-14-028, § 296-806-30014, filed 6/29/04, effective 1/1/05.]

WAC 296-806-30016 Safeguard fan blades.

Reference: In the absence of a specific safeguarding method, follow the safeguarding requirements found in safeguarding methods, WAC 296-806-20042 through 296-806-20058. Examples of safeguarding methods include:

• Guards.
• Devices.
• Safeguarding by distance.
• Safeguarding by location.

Exemption: A fan is considered guarded if it meets all of the following requirements:

– It is in a basement, tower, or room locked against unauthorized entrance.
– The vertical clearance in passageways between the floor and power transmission beams, ceiling, or any other objects, is not less than five feet six inches.
– The intensity of illumination must be a minimum of ten foot candles when the area is occupied.
– The footing is dry, firm, and level.
– The route followed by the oiler or authorized personnel is protected in such a manner as to prevent accident.
– The periphery of the fan blade is covered by a shroud.

You must:

• Protect employees from exposure to the blades of any fan less than seven feet above the floor or working surface.

• Prevent rods, pipes, or other material being handled by workers, from contacting moving fan blades.

Reference: For guard opening requirements, see Table 200-1, Largest Allowable Guard Opening in, Make sure

guards meet these requirements, WAC 296-806-20042.

[Statutory Authority: RCW 49.17.010, 49.17.040, 49.17.050, and 49.17.060. 04-14-028, § 296-806-30016, filed 6/29/04, effective 1/1/05.]

FLYWHEELS

WAC 296-806-30018 Safeguard flywheels.

You must:

• Safeguard flywheels that have any part of the wheel seven feet or less above the floor or working surface with either:

– An enclosure;

OR

– A guardrail, at least fifteen inches but no more than twenty inches from the rim.

• Make sure enclosures that safeguard flywheels located above a working area are strong enough to hold the weight of the wheel, if a shaft or wheel mounting fails.

• Provide a toeboard on guardrails used to safeguard flywheels that have any part of the wheel within twelve inches of the floor or working surface.

• Do both of the following to safeguard spoked flywheels that are five feet or less in diameter with smooth rims, when enclosures or guardrails cannot be used:

– Cover the spokes on the exposed side of the wheel with a disk guard that creates a smooth surface and edge;

AND

– Remove or cover keys or other dangerous projections on the wheel that are not covered by the disk guard.

Exemption:
- You may leave an open space of four inches or less between the outside edge of the disk guard and the rim of the spoked flywheel to make it easier to turn the wheel over.
- You may use an adjustable guard for the flywheel of a gasoline or diesel engine for starting the engine or for making running adjustments. A slot opening for a jack bar is permitted.

[Statutory Authority: RCW 49.17.010, 49.17.040, 49.17.050, and 49.17.060. 04-14-028, § 296-806-30018, filed 6/29/04, effective 1/1/05.]

WAC 296-806-30020 Safeguard gears.

You must:

• Safeguard gears that are seven feet or less above the floor or working surface.

Reference: In the absence of a specific safeguarding method, follow the safeguarding requirements found in safeguarding methods, WAC 296-806-20042 through 296-806-20058. Examples of safeguarding methods include:
• Guards.
• Devices.
• Safeguarding by distance.
• Safeguarding by location.

Exemption: You do not need to guard hand-operated gears that are used only to adjust machine parts that stop when the gears are not being turned by hand.

[Statutory Authority: RCW 49.17.010, 49.17.040, 49.17.050, and 49.17.060. 04-14-028, § 296-806-30020, filed 6/29/04, effective 1/1/05.]

WAC 296-806-30022 Safeguard projections on moving parts.

You must:

• Safeguard projections on moving parts such as keys, setscrews, bolts, and nuts, by:

– Removing them.

– Making them flush.

– Guarding with metal covers.

Exemption: This requirement does not apply to keys or setscrews that are:
- Within an enclosure.
- Below the plane of the rim of a pulley that is less than twenty inches in diameter.
- Located where employee contact is not possible.

[Statutory Authority: RCW 49.17.010, 49.17.040, 49.17.050, and 49.17.060. 04-14-028, § 296-806-30022, filed 6/29/04, effective 1/1/05.]

WAC 296-806-30024 Safeguard pulleys.

You must:

• Safeguard pulleys that have any part of the pulley seven feet or less above the floor or working surface.

Reference: In the absence of a specific safeguarding method, follow the safeguarding requirements found in safeguarding methods, WAC 296-806-20042 through 296-806-20058. Examples of safeguarding methods include:
• Guards.
• Devices.
• Safeguarding by distance.
• Safeguarding by location.

Exemption: You do not need to safeguard pulleys that are in a room, vault, or similar space that contain only power transmission parts or equipment if the space:
- Is controlled by lock and key or has similarly restricted access that allows only authorized persons to enter.
- Is well lit.
- Has a dry, level, and firm floor.
- Has a well-marked route with a vertical clearance of at least five feet six inches for authorized employees to follow to perform their duties.

[Statutory Authority: RCW 49.17.010, 49.17.040, 49.17.050, and 49.17.060. 04-14-028, § 296-806-30024, filed 6/29/04, effective 1/1/05.]

WAC 296-806-30026 Make sure pulleys meet these requirements.

You must:

(1) Make sure pulleys are designed and balanced for the speed at which they operate.

(2) Make sure **not** to use pulleys that are cracked or have a piece broken out of the rim.

[Statutory Authority: RCW 49.17.010, 49.17.040, 49.17.050, and 49.17.060. 04-14-028, § 296-806-30026, filed 6/29/04, effective 1/1/05.]

WAC 296-806-30028 Safeguard revolving drums, barrels, and containers.

You must:

• Safeguard revolving drums, barrels, or containers by an enclosure that is interlocked with the drive mechanism so that they cannot revolve unless the enclosure is in place.

[Statutory Authority: RCW 49.17.010, 49.17.040, 49.17.050, and 49.17.060. 04-14-028, § 296-806-30028, filed 6/29/04, effective 1/1/05.]

WAC 296-806-30030 Safeguard shafting.

Exemption: You do not need to safeguard shafting that is in a room, vault, or similar space that contains only power transmission parts or equipment if the space:
- Is controlled by lock and key or has similarly restricted access that allows only authorized persons to enter.
- Is well lit.
- Has a dry, level, and firm floor.
- Has a well-marked route with a vertical clearance of at least five feet six inches for authorized employees to follow to perform their duties.

You must:

• Enclose shafting that is seven feet or less above the floor or working surface.

• Make sure projecting shaft ends either:

– Have a smooth edge, smooth end, and project no more than one-half the diameter of the shaft;

OR

– Are guarded by a nonrotating cap or safety sleeve.

• Safeguard shafting under a bench or table by enclosing it in a stationary casing or by using a trough with sides that both:

– Cover the shafting to within six inches of the bottom of the table or to within six inches of the floor or working surface, whichever is appropriate;

AND

– Extend two inches beyond the end of the shafting.

[Statutory Authority: RCW 49.17.010, 49.17.040, 49.17.050, and 49.17.060. 04-14-028, § 296-806-30030, filed 6/29/04, effective 1/1/05.]

WAC 296-806-30032 Make sure shafting meets these requirements.

You must:

(1) Keep shafting free of:

• Excessive oil or grease.

• Rust or pitting from corrosion.

(2) Secure shafting against excessive endwise movement.

[Statutory Authority: RCW 49.17.010, 49.17.040, 49.17.050, and 49.17.060. 04-14-028, § 296-806-30032, filed 6/29/04, effective 1/1/05.]

WAC 296-806-30034 Safeguard unused keyways.

You must:

• Fill, cover, or otherwise safeguard all unused keyways.

Reference: In the absence of a specific safeguarding method, follow the safeguarding requirements found in safeguarding methods, WAC 296-806-20042 through 296-806-20058. Examples of safeguarding methods include:
• Guards.
• Devices.
• Safeguarding by distance.
• Safeguarding by location.

[Statutory Authority: RCW 49.17.010, 49.17.040, 49.17.050, and 49.17.060. 04-14-028, § 296-806-30034, filed 6/29/04, effective 1/1/05.]

WAC 296-806-30036 Make sure revolving collars meet these requirements.

You must:

• Make sure revolving collars are cylindrical.

• Make sure screws or bolts used in the collar do **not** project beyond the outside of the collar.

[Statutory Authority: RCW 49.17.010, 49.17.040, 49.17.050, and 49.17.060. 04-14-028, § 296-806-30036, filed 6/29/04, effective 1/1/05.]

WAC 296-806-30038 Safeguard counterweights.

You must:

• Provide safeguarding for all counterweights where employees are exposed to contact.

Reference: In the absence of a specific safeguarding method, follow the safeguarding requirements found in safeguarding methods, WAC 296-806-20042 through 296-806-20058. Examples of safeguarding methods include:
• Guards.
• Devices.
• Safeguarding by distance.
• Safeguarding by location.

[Statutory Authority: RCW 49.17.010, 49.17.040, 49.17.050, and 49.17.060. 04-14-028, § 296-806-30038, filed 6/29/04, effective 1/1/05.]

ADDITIONAL REQUIREMENTS FOR SOME MACHINES AND MACHINE OPERATIONS

WAC 296-806-400 Summary. If your specific machine or operation is not listed here, then follow the "Requirements for all machines" found in this chapter, WAC 296-806-200 and 296-806-300.

Your responsibility:

To protect employees from hazards associated with specific machines and their operations in your workplace.

You must:

Abrasive wheels and machines
WAC 296-806-405.
Calenders
WAC 296-806-410.
Compactors
WAC 296-806-415.
Conveyors
WAC 296-806-420.
Food processing equipment
WAC 296-806-425.
Forging machines
WAC 296-806-430.
Garbage (waste) disposals
WAC 296-806-435.
Glue spreaders
WAC 296-806-440.
Ironworkers
WAC 296-806-445.
Lathes
WAC 296-806-450.
Mechanical power presses
WAC 296-806-455.
Mills
WAC 296-806-460.
Press brakes
WAC 296-806-465.
Roll-forming and bending machines
WAC 296-806-470.
Sanding machines
WAC 296-806-475.
Saws and cutting heads
WAC 296-806-480.
Sewing machines
WAC 296-806-485.

[Statutory Authority: RCW 49.17.010, 49.17.040, 49.17.050, and 49.17.060. 04-14-028, § 296-806-400, filed 6/29/04, effective 1/1/05.]

ABRASIVE WHEELS

WAC 296-806-405 Summary.

• In addition to the requirements in this section, you need to refer to the following sections of this chapter in order to fully protect your employees from machine hazards.

• Requirements for all machines, WAC 296-806-200 and 296-806-300.

• You need to refer to Portable power tools, chapter 296-807 WAC for requirements relating to hand-held abrasive wheel tools.

This section applies to machines that are not hand held and that use an abrasive wheel.

Definition:

An *abrasive wheel* is a grinding tool consisting of bonded abrasive grains. This includes diamond and reinforced wheels.

Your responsibility:

To make sure abrasive wheel machines and wheels are safe to use.

You must:

GENERAL REQUIREMENTS FOR ABRASIVE WHEELS

Make sure abrasive wheels and machines are properly designed and constructed

WAC 296-806-40502.

Make sure machines have safety guards

WAC 296-806-40504.

Make sure safety guards meet specific requirements

WAC 296-806-40506.

Provide a tongue guard on bench, pedestal, floorstand, and cylindrical grinders

WAC 296-806-40508.

Use a work rest for off-hand grinding

WAC 296-806-40510.

MOUNTING ABRASIVE WHEELS

Make sure abrasive wheels are safe to use

WAC 296-806-40512.

Mount wheels properly

WAC 296-806-40514.

Use proper flanges

WAC 296-806-40516.

Make sure flanges are in good condition

WAC 296-806-40518.

Use specific flanges for Type 1 cutting-off wheels

WAC 296-806-40520.

Use specific flanges for Type 27A cutting-off wheels

WAC 296-806-40522.

Use blotters when required

WAC 296-806-40524.

Meet specific blotter requirements when using modified Types 6 and 11 wheels (terrazzo)

WAC 296-806-40526.

[Statutory Authority: RCW 49.17.010, 49.17.040, 49.17.050, and 49.17.060. 04-14-028, § 296-806-405, filed 6/29/04, effective 1/1/05.]

WAC 296-806-40502 Make sure abrasive wheels and machines are properly designed and constructed.

You must:

• Make sure abrasive wheels and machines, including safety guards and flanges, manufactured on or after January 1, 2005, meet the design and construction requirements of American National Standards Institute (ANSI) B7.1-2000, Safety Requirements for the Use, Care and Protection of Abrasive Wheels.

• Make sure abrasive wheels and machines, including safety guards and flanges, manufactured before January 1, 2005, meet the design and construction requirements of American National Standards Institute (ANSI) B7.1-1970, Safety Code for the Use, Care and Protection of Abrasive Wheels.

Note: There may be a statement on the machine or in the instruction manual that the machine meets the appropriate ANSI standard. If in doubt, check with the manufacturer.

[Statutory Authority: RCW 49.17.010, 49.17.040, 49.17.050, and 49.17.060. 04-14-028, § 296-806-40502, filed 6/29/04, effective 1/1/05.]

WAC 296-806-40504 Make sure machines have safety guards. You must:

• Use abrasive wheels only on machines that have safety guards.

• Make sure the safety guard:

– Is mounted so it maintains proper alignment with the wheel.

– Is mounted with fasteners strong enough to keep the guard in position if a wheel breaks.

– Covers the spindle end, nut, and flange projections.

Exemption: Safety guards are not required on machines that use:

- Wheels for internal grinding while advancing, retracting or within the work.
- Types 16, 17, 18, 18R, and 19 cones and plugs and threaded hole pot balls where either:
  - The work offers protection;

  OR
  - The size does not exceed three inches in diameter by five inches long.
- Notched, segmented, or continuous rim metal centered diamond lapidary wheels that are:
  - Used with a coolant deflector;

  AND
  - Operated at 3,500 SFPM or less.
- Type 1 reinforced wheels that are:
  - Three inches or less in diameter.
  - One-fourth inch or less thick.
  - Operating at peripheral speeds of 9,500 SFPM or less.
  - Used by operators wearing safety glasses and face shields.
- Valve seating grinding wheels.
- Remotely operated machines in an enclosure that will retain the pieces of a broken wheel.

[Statutory Authority: RCW 49.17.010, 49.17.040, 49.17.050, and 49.17.060. 04-14-028, § 296-806-40504, filed 6/29/04, effective 1/1/05.]

WAC 296-806-40506 Make sure safety guards meet specific requirements.

You must:

• Make sure the machine safety guards meet the requirements of Table 405-1, Guard Requirements.

Definition:

Maximum exposure angle is the largest part of a wheel that does not need to be covered by a safety guard.

Note:
- The maximum exposure angle is measured by lines starting at the center of the spindle and extending to the ends of the guard at the wheel periphery.
- Visors and other accessory equipment are used in determining the size of the guard opening only if they are at least as strong as the safety guard.

Table 405-1
Guard Requirements

Machine	Maximum exposure angle and other guard restrictions
Bench, pedestal, or floorstand grinders	• Not higher than sixty-five degrees above the horizontal centerline of the wheel • One-fourth (ninety degrees) of the wheel for grinding done at or above the horizontal centerline of the wheel • One hundred twenty-five degrees if the work has to contact the wheel below the horizontal centerline of the wheel
Cylindrical grinders	• One-half (one hundred eighty degrees) of the wheel • Not higher than sixty-five degrees above the horizontal centerline of the wheel
Surface grinders	• One hundred fifty degrees of the wheel • Not higher than fifteen degrees below the horizontal
Cutting-off machines	• One-half (one hundred eighty degrees) of the wheel
Swing frame grinders	• One-half (one hundred eighty degrees) of the wheel • Encloses the top one-half of the wheel
Swing frame grinders using cup wheels	• One-half (one hundred eighty degrees) of the wheel • Covers the wheel on the side towards the operator
Semiautomatic snagging machines	• One-half (one hundred eighty degrees) of the wheel • Covers the wheel on the side towards the operator
Machines used for top grinding	•As small as possible up to one-sixth (sixty degrees) of the wheel

[Statutory Authority: RCW 49.17.010, 49.17.040, 49.17.050, and 49.17.060. 04-14-028, § 296-806-40506, filed 6/29/04, effective 1/1/05.]

WAC 296-806-40508 Provide a tongue guard on bench, pedestal, floorstand, and cylindrical grinders.

You must:

• Make sure, if the operator stands in front of the opening in the safety guard, that the safety guard (tongue guard) at the top of the opening is adjusted to within one-fourth inch of the wheel.

Definition:

The tongue guard is an integral part of a safety guard that is located where the upper exposed part of the abrasive wheel meets the safety guard. It can be adjusted as necessary to maintain a set distance from the constantly decreasing diameter of the wheel.

[Statutory Authority: RCW 49.17.010, 49.17.040, 49.17.050, and 49.17.060. 04-14-028, § 296-806-40508, filed 6/29/04, effective 1/1/05.]

WAC 296-806-40510 Use a work rest for off-hand grinding.

Exemption: You do not need to use a work rest if:
• The size, shape, weight or finishing area of the workpiece prevents its use;
OR
• Contact with the grinding wheel below the horizontal plane of the spindle is necessary.

You must:

• Use a work rest to support the work.

• Make sure the work rest is:

– Rigidly constructed.

– Adjustable to compensate for wheel wear.

– Adjusted only when the wheel is stopped.

– Securely clamped after each adjustment.

– Kept within one-eighth inch of the wheel.

[Statutory Authority: RCW 49.17.010, 49.17.040, 49.17.050, and 49.17.060. 04-14-028, § 296-806-40510, filed 6/29/04, effective 1/1/05.]

WAC 296-806-40512 Make sure abrasive wheels are safe to use.

You must:

• Do the following before mounting a wheel:

– Visually inspect the wheel for cracks or damage.

– Perform a ring test for cracks if the size and shape of the wheel permits testing.

– Make sure the spindle speed of the machine is not greater than the operating speed of the wheel.

• Make sure a damaged or cracked wheel is not mounted or used.

Note: Wheels that have gouges, grooves, other damage, or material buildup on the grinding surface need to be dressed or trued to correct the problem. Wheels that cannot be trued are considered damaged and cannot be used.

[Statutory Authority: RCW 49.17.010, 49.17.040, 49.17.050, and 49.17.060. 04-14-028, § 296-806-40512, filed 6/29/04, effective 1/1/05.]

WAC 296-806-40514 Mount wheels properly.

You must:

(1) Make sure wheels fit freely on the spindle, wheel sleeves, or adaptors, and remain free under all grinding conditions.

(2) Make sure wheel, blotter and flange surfaces that contact each other are flat and free of foreign particles.

(3) Make sure any reducing bushing used in the wheel hole:

• Fits freely on the spindle and maintains proper clearance;

AND

• Does not exceed the width of the wheel or contact the flanges.

(4) Make sure that multiple wheels mounted between a single set of flanges are either:

• Cemented together;

OR

• Separated by spacers that have a diameter and bearing surface that is the same as the mounting flanges.

[Statutory Authority: RCW 49.17.010, 49.17.040, 49.17.050, and 49.17.060. 04-14-028, § 296-806-40514, filed 6/29/04, effective 1/1/05.]

WAC 296-806-40516 Use proper flanges.

You must:

• Mount all abrasive wheels between flanges that have a diameter at least one-third the diameter of the wheel.

Exemption: This flange requirement does not apply to the following wheels:
- Mounted wheels (wheels permanently bonded to a shaft or mandrel).
- Abrasive disc wheels (inserted nut, inserted washer and projecting stud type).
- Plate mounted wheels.
- Cylinder, cup, or segmental wheels mounted in chucks.
- Types 27, 28, and 29 wheels.
- Internal wheels less than two inches in diameter.
- Modified Type 6 and 11 wheels (terrazzo).
- Types 1 and 27A cutting-off wheels.

You must:

• Make sure flanges are:

– Dimensionally accurate.

– Properly balanced.

– Flat.

– Free of rough surfaces or sharp edges.

• Make sure the driving flange is:

– Part of the spindle;

OR

– Securely fastened to the spindle.

• Make sure, if a wheel is mounted between two flanges, that both flanges:

– Are the same diameter;

AND

– Have equal bearing surfaces.

Exemption: The following wheels do not require same diameter, equal bearing surface flanges:
- Types 27, 28, and 29 wheels with adaptors.
- Modified Types 6 and 11 wheels with tapered K dimension.
- Internal wheels less than two inches in diameter.

[Statutory Authority: RCW 49.17.010, 49.17.040, 49.17.050, and 49.17.060. 04-14-028, § 296-806-40516, filed 6/29/04, effective 1/1/05.]

WAC 296-806-40518 Make sure flanges are in good condition.

You must:

• Make sure flange bearing surfaces are in good condition.

• Replace or remachine a flange with a mounting surface that has any of the following problems:

– Warped.

– Burred on the bearing surface.

– Excessively worn (thickness or diameter).

– Out of true.

Reference: Flanges that are refaced or trued need to satisfy minimum dimension requirements specified in Safety Requirements for the Use, Care and Protection of Abrasive Wheels, ANSI B7.1-2000.

[Statutory Authority: RCW 49.17.010, 49.17.040, 49.17.050, and 49.17.060. 04-14-028, § 296-806-40518, filed 6/29/04, effective 1/1/05.]

WAC 296-806-40520 Use specific flanges for Type 1 cutting-off wheels.

You must:

• Mount Type 1 cutting-off wheels between flanges that are:

– Properly relieved with matching bearing surfaces.

– At least one-fourth the wheel diameter.

[Statutory Authority: RCW 49.17.010, 49.17.040, 49.17.050, and 49.17.060. 04-14-028, § 296-806-40520, filed 6/29/04, effective 1/1/05.]

WAC 296-806-40522 Use specific flanges for Type 27A cutting-off wheels.

You must:

• Mount Type 27A cutting-off wheels between flanges that are:

– Flat (unrelieved) with matching bearing surfaces;

AND

– At least one-fourth the wheel diameter.

[Statutory Authority: RCW 49.17.010, 49.17.040, 49.17.050, and 49.17.060. 04-14-028, § 296-806-40522, filed 6/29/04, effective 1/1/05.]

WAC 296-806-40524 Use blotters when required.

Exemption: You do not need to use a blotter with any of the following:
- Mounted wheels (wheels permanently bonded to a shaft or mandrel).
- Abrasive disc and Type 2 wheels which are mounted by inserted nuts, inserted washers, or projecting studs.
- Plate mounted wheels.
- Wheels mounted in chucks (such as cylinders and segmental wheels).
- Types 27, 28, and 29 wheels.
- Type 1 and Type 27A cutting-off wheels.
- Internal wheels less than two inches in diameter.
- Diamond and cubic boron nitride wheels with metal or carbon fiber cores.

You must:

• Use a blotter between each flange and the abrasive wheel surface to uniformly distribute flange pressure.

• Make sure the blotter covers the entire flange contact area.

• Use a new blotter each time a wheel is mounted unless the wheel has a blotter already attached to it by the manufacturer.

• Make sure scuffed or damaged blotters are not used.

[Statutory Authority: RCW 49.17.010, 49.17.040, 49.17.050, and 49.17.060. 04-14-028, § 296-806-40524, filed 6/29/04, effective 1/1/05.]

WAC 296-806-40526 Meet specific blotter requirements when using modified Types 6 and 11 wheels (terrazzo).

You must:

• Apply the blotter to the flat side only when mounting Modified Types 6 and 11 wheels (terrazzo).

[Statutory Authority: RCW 49.17.010, 49.17.040, 49.17.050, and 49.17.060. 04-14-028, § 296-806-40526, filed 6/29/04, effective 1/1/05.]

Calenders

WAC 296-806-410 Summary. In addition to the requirements in this section, you need to refer to the following sections of this chapter in order to fully protect your employees from machine hazards:

• Requirements for all machines, WAC 296-806-200 and 296-806-300.

This section applies only to hazards associated with calenders in the rubber and plastics industry where two or more metal rolls are set vertically and revolving in opposite directions.

Your responsibility:

To protect employees from hazards associated with calenders.

You must:

Provide calender safety controls

WAC 296-806-41002.

Follow these stopping limit requirements for calenders

WAC 296-806-41004.

[Statutory Authority: RCW 49.17.010, 49.17.040, 49.17.050, and 49.17.060. 04-14-028, § 296-806-410, filed 6/29/04, effective 1/1/05.]

WAC 296-806-41002 Provide calender safety controls.

Exemption: These rules do not apply to calenders if the machinery is permanently set up so employees:
- Cannot reach through, over, under, or around to come in contact with the roll bite;

OR
- Cannot be caught between a roll and nearby objects.

You must:

(1) Provide a safety trip control for the face of the calender that meets **all** of the following:

• Provided in front and back of each calender.

• Is accessible.

• Operates readily upon contact.

(2) Provide **at least one** of the following safety trip controls for the face of the calender:

• Safety trip rods, tripwire cables or wire center cords that:

– Are within reach of the operator and the bite (nip point).

– Operate whether pushed or pulled.

– Are located across each pair of in-running rolls extending the length of the face of the rolls.

• Pressure sensitive body bars that:

– Are approximately forty inches vertically above the working level.

– Are horizontally at thirty-four inches from the in-running nip point.

– Operate readily by pressure of the mill operator's body.

(3) Include safety trip rods, cables or cords, in addition to the pressure sensitive body bars, if **both** of these apply:

• In-running rolls are located below the bar;

AND

• The operator needs to duck under the bar.

(4) Provide a safety cable or wire center cord on both sides of the calender that:

• Operates readily when pushed or pulled.

• Is connected to the safety trip.

Note:
- The center cord should be **all** of the following:
  - Twelve inches or less from the faces of the individual rolls.
  - At least two inches from the calender frame.
  - Anchored to the frame not more than six inches from the floor or operator's platform.

[Statutory Authority: RCW 49.17.010, 49.17.040, 49.17.050, and 49.17.060. 04-14-028, § 296-806-41002, filed 6/29/04, effective 1/1/05.]

WAC 296-806-41004 Follow these stopping limit requirements for calenders.

You must:

• Make sure that calenders are stopped within one and three-quarters percent of the fastest speed at which they operate when empty.

– When calenders operate at more than two hundred fifty feet per minute, stopping distances above one and three-quarters percent of their fastest speed are allowed, but must have engineering support.

[Statutory Authority: RCW 49.17.010, 49.17.040, 49.17.050, and 49.17.060. 04-14-028, § 296-806-41004, filed 6/29/04, effective 1/1/05.]

COMPACTORS

WAC 296-806-415 Summary. In addition to the requirements in this section, you need to refer to the following sections of this chapter in order to fully protect your employees from machine hazards:

• Requirements for all machines, WAC 296-806-200 and 296-806-300.

This section applies to all stationary compactors in your workplace.

Your responsibility:

To protect employees from hazards associated with stationary compactors.

You must:

Safeguard hazardous moving parts of stationary compactors

WAC 296-806-41502.

Follow these requirements for compactor controls

WAC 296-806-41504.

Follow these requirements for compactor access doors and covers

WAC 296-806-41506.

Follow these requirements for compactors that cycle automatically

WAC 296-806-41508.

[Statutory Authority: RCW 49.17.010, 49.17.040, 49.17.050, and 49.17.060. 04-14-028, § 296-806-415, filed 6/29/04, effective 1/1/05.]

WAC 296-806-41502 Safeguard hazardous moving parts of stationary compactors.

You must:

• Prevent the compactor from operating while employees have any body parts in the compactor or hazard area.

• Provide a safeguarding method that prevents employees from putting hands, fingers, or any body part into the compactor during operation.

Note: Examples of safeguarding methods include:
- Making sure the compactor will not compact material while the gate or door is open.
- Installing a guard, loading hopper, or enclosure at least forty-two inches high that prevents:
  - Entry of hands, fingers, or any body part into the loading chamber during operation.
  - An operator from being caught between moving parts of the equipment and material.
  - The creation of any hazard between the guard and moving parts.
- You may also provide sustained manual pressure controls located so the operator cannot reach, but can still see, the point of operation if a guard is not used.

Reference: For additional requirements when adjusting or clearing jams from compactors, see Lockout/tagout (control of hazardous energy), chapter 296-803 WAC.

[Statutory Authority: RCW 49.17.010, 49.17.040, 49.17.050, and 49.17.060. 04-14-028, § 296-806-41502, filed 6/29/04, effective 1/1/05.]

WAC 296-806-41504 Follow these requirements for compactor controls.

You must:

• Follow these requirements for compactor controls:

– Each control must have its function clearly labeled.

– Controls must be designed and located to prevent them from unintentionally activating.

– Electric stop buttons, including emergency stop buttons, must be:

■ Red in color, distinguishable from all other controls by size, and not recessed.

– Emergency stop controls must be either:

■ Readily accessible to the operator;

OR

■ Located within three feet (91.4 cm) of the point of operation or feed area **or** if chute fed, within three feet (91.4 cm) of the access door.

– An electrical disconnect must be located within sight, no more than fifty feet (1,524 cm), from the operating control panel.

[Statutory Authority: RCW 49.17.010, 49.17.040, 49.17.050, and 49.17.060. 04-14-028, § 296-806-41504, filed 6/29/04, effective 1/1/05.]

WAC 296-806-41506 Follow these requirements for compactor access doors and covers.

You must:

• Make sure access covers meet at least one of the following:

– Interlocked.

– Secured by a lockable device.

– Removable by hand tools only.

• Make sure any loading chamber access door has an interlock system that prevents cycling motion when the door is open.

[Statutory Authority: RCW 49.17.010, 49.17.040, 49.17.050, and 49.17.060. 04-14-028, § 296-806-41506, filed 6/29/04, effective 1/1/05.]

WAC 296-806-41508 Follow these requirements for compactors that cycle automatically.

You must:

• Use automatic cycling controls only on compactors where the loading chamber is located so that it cannot be accessed during operation.

[Statutory Authority: RCW 49.17.010, 49.17.040, 49.17.050, and 49.17.060. 04-14-028, § 296-806-41508, filed 6/29/04, effective 1/1/05.]

CONVEYORS

WAC 296-806-420 Summary. If your specific conveyor or operation is not listed here, then follow any general requirements in this section along with the "Requirements for all machines" found in this chapter, WAC 296-806-200 and 296-806-300.

This section applies to hazards related to conveyors and conveying systems, including bulk material, package, or unit handling types. These requirements are designed to protect employees operating, maintaining, cleaning, and working around conveyors.

Exemption: This section does not apply to conveyor systems used primarily for moving people.

Your responsibility:

To make sure all conveyors in your workplace are constructed, operated, and maintained in a safe manner.

You must:

GENERAL REQUIREMENTS FOR CONVEYORS

Follow these requirements for conveyors
WAC 296-806-42002.

Provide emergency stops on conveyors
WAC 296-806-42004.

Label conveyor controls
WAC 296-806-42006.

Prohibit riding on conveyors
WAC 296-806-42008.

Provide safe access to conveyors
WAC 296-806-42010.

Provide backstop or antirunaway devices to incline, decline, or vertical conveyors
WAC 296-806-42012.

Make only safe alterations to conveyors
WAC 296-806-42014.

Inspect and replace worn conveyor parts
WAC 296-806-42016.

Follow these requirements for replacing conveyor parts
WAC 296-806-42018.

Follow these requirements for spill guards
WAC 296-806-42020.

Provide pedestrian overpasses for conveyors
WAC 296-806-42022.

Guard openings to hoppers and chutes
WAC 296-806-42024.

Install guideposts
WAC 296-806-42026.

BELT CONVEYORS

Guard nip points on belt conveyors
WAC 296-806-42028.

Install emergency stop controllers on overland belt conveyors
WAC 296-806-42030.

Install belt conveyor overpasses
WAC 296-806-42032.

CHAIN CONVEYORS

Safeguard chain conveyors
WAC 296-806-42034.

Guard return strands on chain conveyors
WAC 296-806-42036.

Guard chain conveyors that are used as a transfer mechanism
WAC 296-806-42038.

ELEVATOR CONVEYORS

Prevent material from falling off of elevator conveyors
WAC 296-806-42040.

INCLINED RECIPROCATING CONVEYORS (SHAKERS)

Provide protection where employees must load shakers
WAC 296-806-42042.

Provide grating over silo and bunker openings for shuttle conveyors
WAC 296-806-42044.
MOBILE CONVEYORS
Guard wheels and rails on mobile conveyors
WAC 296-806-42046.
Prevent hazardous motion on mobile conveyors
WAC 296-806-42048.
Provide a detector for mobile conveyors
WAC 296-806-42050.
Provide safe access on mobile conveyors
WAC 296-806-42052.
PUSHER-BAR CONVEYORS
Guard pusher-bar conveyors
WAC 296-806-42054.
ROLLER CONVEYORS
Prohibit walking on roller-type conveyors
WAC 296-806-42056.
Use speed controls for roller and wheel conveyors
WAC 296-806-42058.
Safeguard belt-driven live roller conveyors
WAC 296-806-42060.
SCREW CONVEYORS
Guard screw conveyors
WAC 296-806-42062.
SKIP HOISTS
Provide slack-cable switches on hoists
WAC 296-806-42064.
Block the skip bucket and counterweight guides
WAC 296-806-42066.
Protect against wire rope coming off sheaves
WAC 296-806-42068.
SLAT AND ROLLER-SLAT CONVEYORS
Safeguard slat and roller-slat conveyors
WAC 296-806-42070.
TOWED CONVEYORS
Provide a safe method for disengaging the tow pin
WAC 296-806-42072.
Protect employees from moving carts on towed conveyors
WAC 296-806-42074.
Provide clearances and warnings for carts on towed conveyors
WAC 296-806-42076.
Mark projections above the floor
WAC 296-806-42078.

[Statutory Authority: RCW 49.17.010, 49.17.040, 49.17.050, and 49.17.060. 04-14-028, § 296-806-420, filed 6/29/04, effective 1/1/05.]

GENERAL REQUIREMENTS FOR CONVEYORS

WAC 296-806-42002 Follow these requirements for conveyors.

You must:

• Construct, operate, and maintain all conveyors according to this chapter and the American National Standards Institute (ANSI) B20.1-1957.

• Make sure all new conveyors constructed after January 1, 2005, meet the requirements of the American Society of Mechanical Engineers (ASME) B20.1-1996.

[Statutory Authority: RCW 49.17.010, 49.17.040, 49.17.050, and 49.17.060. 04-14-028, § 296-806-42002, filed 6/29/04, effective 1/1/05.]

WAC 296-806-42004 Provide emergency stops on conveyors. You must:

• Make sure each conveyor has an emergency stopping device such as an emergency stop button, pull cord, or similar device.

• Make sure each emergency stopping device meets **all** of the following requirements. They must:

– Stop the conveyor a safe distance from the hazard.
– Be easily identified.
– Directly control that conveyor.
– Require a manual reset.
– NOT be overridden from another location.
– NOT require other equipment to be stopped in order to stop the conveyor.

• Make sure where there is the possibility of an employee falling onto a conveyor, that the emergency stopping device for conveyors feeding or dumping into a hazardous machine such as a barker, saw, hog, or chipper is **at least one** of the following:

– Under the continuous control of an operator who cannot fall onto the conveyor and has full view of the material entrance;

OR

– Located where it can be reached from a sitting position on the conveyor where it feeds or dumps into the hazardous machine.

[Statutory Authority: RCW 49.17.010, 49.17.040, 49.17.050, and 49.17.060. 04-14-028, § 296-806-42004, filed 6/29/04, effective 1/1/05.]

WAC 296-806-42006 Label conveyor controls.

You must:

• Clearly label the function of each conveyor control.

Note: Controls and wiring that are no longer used should be removed from control stations.

[Statutory Authority: RCW 49.17.010, 49.17.040, 49.17.050, and 49.17.060. 04-14-028, § 296-806-42006, filed 6/29/04, effective 1/1/05.]

WAC 296-806-42008 Prohibit riding on conveyors.

You must:

• Prohibit employees from riding on conveyors.

Exemption: You do not need to prohibit riding on an assembly conveyor moving eighty feet or less per minute or a conveyor with a station specifically designed for operating personnel.

[Statutory Authority: RCW 49.17.010, 49.17.040, 49.17.050, and 49.17.060. 04-14-028, § 296-806-42008, filed 6/29/04, effective 1/1/05.]

WAC 296-806-42010 Provide safe access to conveyors.

You must:

• Provide a way to safely inspect and maintain conveyors located more than seven feet from the floor.

Reference: Some additional requirements for protecting employees inspecting and maintaining conveyors can be found in:
• Lockout/tagout (control of hazardous energy), chapter 296-803 WAC.
• Personal fall arrest systems, WAC 296-24-88050.

[Statutory Authority: RCW 49.17.010, 49.17.040, 49.17.050, and 49.17.060. 04-14-028, § 296-806-42010, filed 6/29/04, effective 1/1/05.]

WAC 296-806-42012 Provide backstop or antirunaway devices on incline, decline, or vertical conveyors.

You must:

• Make sure all incline, decline, or vertical conveyors use backstop or antirunaway devices when there is a danger of conveyor reversal or runaway.

[Statutory Authority: RCW 49.17.010, 49.17.040, 49.17.050, and 49.17.060. 04-14-028, § 296-806-42012, filed 6/29/04, effective 1/1/05.]

WAC 296-806-42014 Make only safe alterations to conveyors.

You must:

• Make sure, when making conveyor alterations, that you do not affect safety characteristics such as emergency stop controls, guards, or the incline of the conveyor, if such changes would create a danger to workers.

[Statutory Authority: RCW 49.17.010, 49.17.040, 49.17.050, and 49.17.060. 04-14-028, § 296-806-42014, filed 6/29/04, effective 1/1/05.]

WAC 296-806-42016 Inspect and replace worn conveyor parts.

You must:

• Carefully inspect and replace any conveyor part that shows signs of significant wear before it becomes a hazard.

[Statutory Authority: RCW 49.17.010, 49.17.040, 49.17.050, and 49.17.060. 04-14-028, § 296-806-42016, filed 6/29/04, effective 1/1/05.]

WAC 296-806-42018 Follow these requirements for replacing conveyor parts.

You must:

• Make sure replacement conveyor parts are equal to or exceed the manufacturer's specifications.

[Statutory Authority: RCW 49.17.010, 49.17.040, 49.17.050, and 49.17.060. 04-14-028, § 296-806-42018, filed 6/29/04, effective 1/1/05.]

WAC 296-806-42020 Follow these requirements for spill guards.

You must:

• Install protective or spill guards wherever conveyors pass next to or over working areas or passageways.

– These guards must be designed to catch and hold any materials that may become dislodged or fall off.

Reference: For specific requirements when conveyors pass over emergency exit routes, see Exit routes, WAC 296-800-310.

[Statutory Authority: RCW 49.17.010, 49.17.040, 49.17.050, and 49.17.060. 04-14-028, § 296-806-42020, filed 6/29/04, effective 1/1/05.]

WAC 296-806-42022 Provide pedestrian overpasses for conveyors.

You must:

• Provide a pedestrian overpass covering the full width of a passageway if **one** of these conditions exists:

– The working strand of a conveyor crosses within three feet of floor level.

– Workers must step over the strand and trough at or below floor level.

• Provide a pedestrian overpass where workers cannot pass under the conveyor safely.

– The sides of the crossing platform must have standard railings if **one** of the following exists:

■ The overpass is more than four feet high.

■ The conveyor feeds a dangerous machine such as saws, chippers, hogs, or galvanizing tanks.

Reference: For guardrail requirements see, Railing, toeboards, and cover specifications, WAC 296-24-75011.

[Statutory Authority: RCW 49.17.010, 49.17.040, 49.17.050, and 49.17.060. 04-14-028, § 296-806-42022, filed 6/29/04, effective 1/1/05.]

WAC 296-806-42024 Guard openings to hoppers and chutes.

You must:

• Guard all openings to hoppers, chutes, and elevator-type conveyors to prevent workers from:

– Falling or stepping into them.

– Making any kind of bodily contact with conveyors.

Note: Grating provided at floor level with no openings larger than two inches (50 mm) that is strong enough to withstand any load of personnel or trucks that may be imposed upon it is acceptable guarding.

You must:

• Do **all** of the following when dumping operations use chutes or hoppers that are flush with the floor and their use cannot be guarded:

– Place a temporary guardrail around ground or floor-level hoppers when dumping operations are **not** in progress.

– Post warning signs in a conspicuous location alerting personnel to the presence of an open pit in order to protect employees when dumping operations are in progress.

Reference: For guardrail requirements see, Railing, toeboards, and cover specifications, WAC 296-24-75011.

[Statutory Authority: RCW 49.17.010, 49.17.040, 49.17.050, and 49.17.060. 04-14-028, § 296-806-42024, filed 6/29/04, effective 1/1/05.]

WAC 296-806-42026 Install guideposts.

You must:

• Install guideposts to direct employees driving trucks, loaders, or other equipment to the pit, hopper, or chute.

[Statutory Authority: RCW 49.17.010, 49.17.040, 49.17.050, and 49.17.060. 04-14-028, § 296-806-42026, filed 6/29/04, effective 1/1/05.]

BELT CONVEYORS

WAC 296-806-42028 Guard nip points on belt conveyors.

Exemption: This rule does not normally require guards along the conveyor at the point where the belt rides on return rollers, such as return-belt idlers, unless hazardous conditions such as long, tight heavy belts exist.

Return-belt idlers

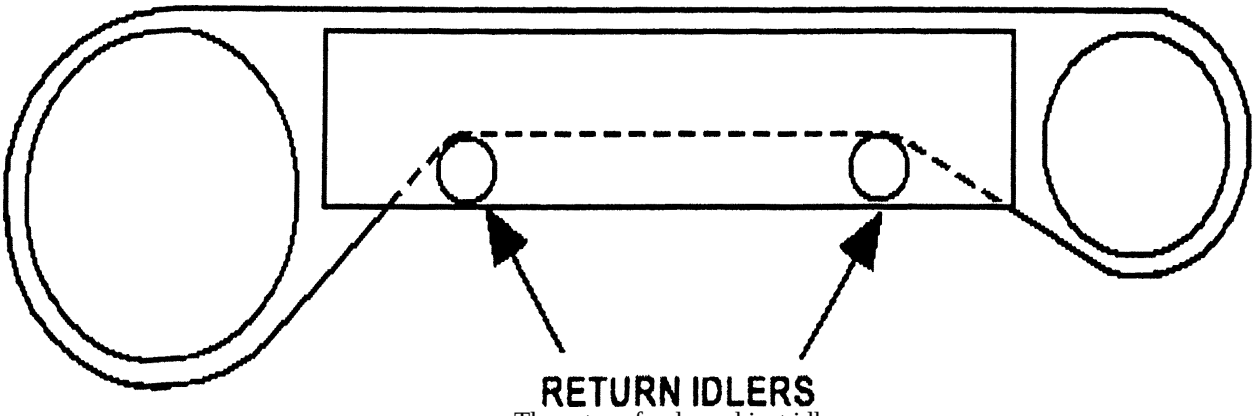

These turn freely and just idle.

You must:

• Place nip point guards at **all** of these points:

– Where the belt wraps around the pulley.

– At terminals, take-ups, and snub rollers where the belt changes directions at transfers and deflectors.

– At the discharge end.

– At other points where workers may be injured by nip or shear points.

Note: The practice of applying a belt dressing or other foreign material to a rotating drive pulley or a conveyor belt is hazardous and should be avoided.

[Statutory Authority: RCW 49.17.010, 49.17.040, 49.17.050, and 49.17.060. 04-14-028, § 296-806-42028, filed 6/29/04, effective 1/1/05.]

WAC 296-806-42030 Install emergency stop controllers on overland belt conveyors.

You must:

• Install permanent emergency pull cords or similar emergency stop controllers at points where workers are normally stationed along overland belt conveyors.

Note: Personnel that patrol overland belt conveyors may use portable emergency stop controllers instead of permanently installed pull cords and push-button stations.

[Statutory Authority: RCW 49.17.010, 49.17.040, 49.17.050, and 49.17.060. 04-14-028, § 296-806-42030, filed 6/29/04, effective 1/1/05.]

WAC 296-806-42032 Install belt conveyor overpasses.

You must:

• Install a pedestrian overpass or underpass along the sides of long overland belt conveyors, where there is the most foot traffic.

– The distance between overpasses should not exceed three hundred meters or one thousand feet.

[Statutory Authority: RCW 49.17.010, 49.17.040, 49.17.050, and 49.17.060. 04-14-028, § 296-806-42032, filed 6/29/04, effective 1/1/05.]

CHAIN CONVEYORS

WAC 296-806-42034 Safeguard chain conveyors.

You must:

• Provide safeguards for drive, tail, and idler sprocket pulleys where the chain creates a nip or shear point.

[Statutory Authority: RCW 49.17.010, 49.17.040, 49.17.050, and 49.17.060. 04-14-028, § 296-806-42034, filed 6/29/04, effective 1/1/05.]

WAC 296-806-42036 Guard return strands on chain conveyors.

You must:

• Provide a way to catch and support the ends of a chain that break over a passageway.

• Provide a strong enough trough to carry the weight from a broken chain on conveyors when return strands operate within seven feet of the floor.

[Statutory Authority: RCW 49.17.010, 49.17.040, 49.17.050, and 49.17.060. 04-14-028, § 296-806-42036, filed 6/29/04, effective 1/1/05.]

WAC 296-806-42038 Guard chain conveyors that are used as a transfer mechanism.

You must:

• Guard chain conveyors whose moving chains cannot be enclosed without impairing their function by **one** of the following methods:

– Distance as required in, Make sure safeguarding by distance meets these requirements, WAC 296-806-20056.

– Personnel barriers.

– Warning signs where personnel barriers are not practical.

Note: Chain conveyors with moving chains that cannot be enclosed include those:
• Mounted within another conveyor.
• Raised and lowered as a transfer mechanism.

[Statutory Authority: RCW 49.17.010, 49.17.040, 49.17.050, and 49.17.060. 04-14-028, § 296-806-42038, filed 6/29/04, effective 1/1/05.]

ELEVATOR CONVEYORS

WAC 296-806-42040 Prevent material from falling off of elevator conveyors.

You must:

• Install strong guards, screens, or barricades to prevent material from falling in any direction into the shaft way of elevator-type conveyors, except at loading and unloading areas.

• Install automatic shaft way gates or suitable barriers at each floor level where material is loaded or unloaded.

[Statutory Authority: RCW 49.17.010, 49.17.040, 49.17.050, and 49.17.060. 04-14-028, § 296-806-42040, filed 6/29/04, effective 1/1/05.]

INCLINED RECIPROCATING CONVEYORS (SHAKERS)

WAC 296-806-42042 Provide protection where employees must load shakers.

You must:

• Provide standard guardrails or snap chains along loading sides of the shaker where personnel must load or unload material.

– Snap chains must be at least thirty-nine inches high at their lowest point.

• Make sure controls are located so the conveyor cannot be started by an employee on the moving part of the conveyor.

[Statutory Authority: RCW 49.17.010, 49.17.040, 49.17.050, and 49.17.060. 04-14-028, § 296-806-42042, filed 6/29/04, effective 1/1/05.]

WAC 296-806-42044 Provide grating over silo and bunker openings for shuttle conveyors.

You must:

• Provide grating with openings to match the size of the material being discharged into silos or bunkers. Make sure openings are:

– Small enough so that workers cannot fall through.

– Protected by other effective means if the material size requires openings large enough for a worker to fall through.

[Statutory Authority: RCW 49.17.010, 49.17.040, 49.17.050, and 49.17.060. 04-14-028, § 296-806-42044, filed 6/29/04, effective 1/1/05.]

MOBILE CONVEYORS

WAC 296-806-42046 Guard wheels and rails on mobile conveyors.

You must:

• Install sweeps in front of the nip points created by the wheels and rails to deflect objects that could derail the conveyor.

[Statutory Authority: RCW 49.17.010, 49.17.040, 49.17.050, and 49.17.060. 04-14-028, § 296-806-42046, filed 6/29/04, effective 1/1/05.]

WAC 296-806-42048 Prevent hazardous motion on mobile conveyors.

You must:

• Make sure mobile conveyors have **at least one** of the following to prevent hazardous motion:

– Brakes.

– Rail clamps.

– Other position-locking devices.

• Provide limit switches that will stop travel when exceeding the design limits of rail-mounted mobile conveyors.

• Provide rail stops to keep the conveyor from traveling past its designed end location.

[Statutory Authority: RCW 49.17.010, 49.17.040, 49.17.050, and 49.17.060. 04-14-028, § 296-806-42048, filed 6/29/04, effective 1/1/05.]

WAC 296-806-42050 Provide a detector for mobile conveyors.

You must:

• Provide a detector to stop conveyor movement when the operation creates a danger of running into a stockpile or other obstacle.

[Statutory Authority: RCW 49.17.010, 49.17.040, 49.17.050, and 49.17.060. 04-14-028, § 296-806-42050, filed 6/29/04, effective 1/1/05.]

WAC 296-806-42052 Provide safe access on mobile conveyors.

You must:

• Make sure that access stairways, ladders, and platforms are designed and located to avoid the shear or nip point hazards of the conveyor and moving machinery.

[Statutory Authority: RCW 49.17.010, 49.17.040, 49.17.050, and 49.17.060. 04-14-028, § 296-806-42052, filed 6/29/04, effective 1/1/05.]

PUSHER-BAR CONVEYORS

WAC 296-806-42054 Guard pusher-bar conveyors.

You must:

• Provide a guard when hazards exist at each of these points:

– At the discharge point where the bar passes through the bed.

– Where there is a shear point between the return pusher bar and a frame member.

[Statutory Authority: RCW 49.17.010, 49.17.040, 49.17.050, and 49.17.060. 04-14-028, § 296-806-42054, filed 6/29/04, effective 1/1/05.]

ROLLER CONVEYORS

WAC 296-806-42056 Prohibit walking on roller-type conveyors.

You must:

• Prohibit employees from walking on the rolls of roller-type conveyors.

– Tread plates or other types of walkways can be used between the rollers as a walking surface for operators when performing their duties.

[Statutory Authority: RCW 49.17.010, 49.17.040, 49.17.050, and 49.17.060. 04-14-028, § 296-806-42056, filed 6/29/04, effective 1/1/05.]

WAC 296-806-42058 Use speed controls for roller and wheel conveyors.

You must:

• Avoid safety hazards created by unit or package speeds by **one** of the following methods:

– Limiting the length of the sloped run.

– Using speed retarders or brakes.

– Other means of providing speed control.

• Make sure rollers and wheels are free running to prevent locked wheels from steering or pulling materials to one side or off the conveyor.

[Statutory Authority: RCW 49.17.010, 49.17.040, 49.17.050, and 49.17.060. 04-14-028, § 296-806-42058, filed 6/29/04, effective 1/1/05.]

WAC 296-806-42060 Safeguard belt-driven live roller conveyors.

You must:

• Guard belt and roller nip points by **one** of the following methods:

– Space load-carrying rollers to prevent access to the belt and roller nip points.

– Insert rods or plates between the rollers to prevent access to the belt and roller nip points.

– Use rollers that pop out when something contacts the nip point.

– Distance safeguarding found in:

■ Make sure safeguarding by distance meets these requirements, WAC 296-806-20056.

Reference: For nip points and sheer hazards on power-driven (live) roller conveyors see, Guard nip points on belt conveyors, WAC 296-806-42028.

[Statutory Authority: RCW 49.17.010, 49.17.040, 49.17.050, and 49.17.060. 04-14-028, § 296-806-42060, filed 6/29/04, effective 1/1/05.]

SCREW CONVEYORS

WAC 296-806-42062 Guard screw conveyors.

You must:

• Enclose the rotating screw to prevent contact with the shear points where it passes the sides of the trough or casing.

• Guard screw conveyors requiring an open housing by using **one** of the following:

– Make sure safeguarding by distance meets these requirements, WAC 296-806-20056.

– Make sure guardrails used for safeguarding meet these requirements, WAC 296-806-20058.

• Construct feed openings for shovel, front-end loader, or other manual or mechanical equipment so that the conveyor screw is covered by a grating.

– If the nature of the material is such that a grating cannot be used, then the exposed section of the conveyor must be guarded by a railing and warning signs.

[Statutory Authority: RCW 49.17.010, 49.17.040, 49.17.050, and 49.17.060. 04-14-028, § 296-806-42062, filed 6/29/04, effective 1/1/05.]

SKIP HOISTS

WAC 296-806-42064 Provide slack-cable switches on hoists.

You must:

• Provide and arrange slack cable switches to cut power to the drive and set the brake when the skip or counterweight hoisting ropes either:

– Develop slack;

OR

– Lose tension due to sticking in the guides, over travel, or for any other reason.

[Statutory Authority: RCW 49.17.010, 49.17.040, 49.17.050, and 49.17.060. 04-14-028, § 296-806-42064, filed 6/29/04, effective 1/1/05.]

WAC 296-806-42066 Block the skip bucket and counterweight guides.

You must:

• Make sure the skip bucket and counterweight are blocked in their guides when the brake or any part of the drive train between the brake and the drum shaft are being repaired or replaced.

[Statutory Authority: RCW 49.17.010, 49.17.040, 49.17.050, and 49.17.060. 04-14-028, § 296-806-42066, filed 6/29/04, effective 1/1/05.]

WAC 296-806-42068 Protect against wire rope coming off sheaves.

You must:

• Fit all sheaves with sheave guards to prevent the wire rope from coming off under slack cable or similar conditions.

[Statutory Authority: RCW 49.17.010, 49.17.040, 49.17.050, and 49.17.060. 04-14-028, § 296-806-42068, filed 6/29/04, effective 1/1/05.]

SLAT AND ROLLER-SLAT CONVEYORS

WAC 296-806-42070 Safeguard slat and roller-slat conveyors.

You must:

• Provide **either** of these safeguards at the tail end of a slat conveyor if the slats are above the centerline of the chain:

– A guard over the hazardous tail end;

OR

– Warning signs if guards are impractical because of material flowing over the tail sprocket.

• Provide **either** of these safeguards when there is a gap between the slats wide enough to permit access to cross members below the slats:

– A continuous pan under the slats;

OR

– Keep all cross members a safe distance from the slats.

[Statutory Authority: RCW 49.17.010, 49.17.040, 49.17.050, and 49.17.060. 04-14-028, § 296-806-42070, filed 6/29/04, effective 1/1/05.]

TOWED CONVEYORS

WAC 296-806-42072 Provide a safe method for disengaging the tow pin.

You must:

• Provide a method for the operator to disengage the tow pin from a conveyor pusher without being in front of the cart.

[Statutory Authority: RCW 49.17.010, 49.17.040, 49.17.050, and 49.17.060. 04-14-028, § 296-806-42072, filed 6/29/04, effective 1/1/05.]

WAC 296-806-42074 Protect employees from moving carts on towed conveyors.

You must:

• Make sure runaway carts are unable to exit ramps and enter work areas.

• Have a barrier of sufficient strength and height on ramps with pedestrian or traffic aisles to prevent a runaway cart from entering the aisle.

• Have signs warning employees not to enter ramps that do not have pedestrian or traffic aisles.

[Statutory Authority: RCW 49.17.010, 49.17.040, 49.17.050, and 49.17.060. 04-14-028, § 296-806-42074, filed 6/29/04, effective 1/1/05.]

WAC 296-806-42076 Provide clearances and warnings for carts on towed conveyors.

You must:

• Provide clearance space for personnel in **all** of the following:

– Between the sides of carts.

– Between any load overhanging the side of a cart.

– Any fixed or moving object.

• Identify the cart path with floor stripes that are:

– Parallel to the cart path.

– Arranged so one line is on each side of the path.

– Located a safe distance from the edge of the cart or overhanging load.

• Mark reduced clearance areas with appropriate warning signs.

Note: An example of a reduced clearance area is an area where a cart goes through a wall opening.

You must:

• Place an appropriate warning on those areas where a cart may unexpectedly change direction, such as switching off the main line into a transfer conveyor or a spur.

Note: An example of an appropriate warning would be to use diagonal stripes on the floor between clearance lines.

You must:

• Install a sign, signal, or other warning where carts start automatically.

[Statutory Authority: RCW 49.17.010, 49.17.040, 49.17.050, and 49.17.060. 04-14-028, § 296-806-42076, filed 6/29/04, effective 1/1/05.]

WAC 296-806-42078 Mark projections above the floor.

You must:

• Mark the area around projections above the floor with appropriate diagonal stripes, warning signs, or both.

Note: This is especially important if projections above the floor are unpredictable or occur intermittently.

[Statutory Authority: RCW 49.17.010, 49.17.040, 49.17.050, and 49.17.060. 04-14-028, § 296-806-42078, filed 6/29/04, effective 1/1/05.]

FOOD PROCESSING EQUIPMENT

WAC 296-806-425 Summary. If your specific food processing machine or operation is not listed here, then follow any facilities requirements in this section along with the "Requirements for all machines" found in this chapter, WAC 296-806-200 and 296-806-300.

This section applies to:

• All businesses that manufacture or process food, whether or not they are contained inside food stores;

AND

• The design, installation, operations, and maintenance of machinery and equipment used in the food processing industry.

Your responsibility:

To protect employees from hazards associated with food processing facilities and machines.

You must:

FACILITIES

Provide locks on chamber doors of large air conditioning units

WAC 296-806-42502.

Use proper door locks on rack-type bread coolers

WAC 296-806-42504.

Provide see-through panels on fermentation room doors

WAC 296-806-42506.

Cover exposed hot pipes

WAC 296-806-42508.

Provide extension piping on stationary lubrication fittings

WAC 296-806-42510.

Provide hoods for pan-washing tanks

WAC 296-806-42512.

Safeguard proof boxes

WAC 296-806-42514.

Safeguard storage bins

WAC 296-806-42516.

MATERIAL HANDLING

Follow these design requirements for bag lifts (bag arm elevators) and chutes

WAC 296-806-42518.

Follow these requirements for chain tackle

WAC 296-806-42520.

Safeguard conveyors

WAC 296-806-42522.

Use properly designed covers for screw conveyors (augers)

WAC 296-806-42524.

Safeguard pallet jacks and hand trucks

WAC 296-806-42526.

SPECIFIC FOOD PROCESSING EQUIPMENT

Safeguard bakery slicers

WAC 296-806-42528.

Safeguard bakery wrapping machines

WAC 296-806-42530.

Provide troughs with antifriction-bearing casters

WAC 296-806-42532.

Follow these requirements for trough hoists and similar equipment

WAC 296-806-42534.

Follow these requirements for dividers

WAC 296-806-42536.

Safeguard manually-fed dough and cross-roll brakes

WAC 296-806-42538.

Provide a guard or tripping device on reversible dough brakes

WAC 296-806-42540.

Follow these requirements for doughnut machines

WAC 296-806-42542.

Follow these requirements for dumpbins and blenders

WAC 296-806-42544.

Follow these requirements for flour-handling machines

WAC 296-806-42546.

Follow these requirements for traveling or track-type flour scales

WAC 296-806-42548.

Follow these requirements for food grinders and cutters

WAC 296-806-42550.

Provide covers with interlocks on ingredient premixers, emulsifiers, and similar machines

WAC 296-806-42552.

Follow these requirements for open fat kettles

WAC 296-806-42554.

Follow these requirements for steam kettles

WAC 296-806-42556.

Follow these requirements for chocolate melting, refining, and mixing kettles

WAC 296-806-42558.

Safeguard meat-processing equipment (circular meat-cutting saws)

WAC 296-806-42560.

Follow these requirements for horizontal dough mixers

WAC 296-806-42562.

Follow these requirements for vertical mixers

WAC 296-806-42564.

Follow these requirements for mechanical-feed moulders

WAC 296-806-42566.

Follow these requirements for hand-fed moulders

WAC 296-806-42568.

Design, install, and construct your ovens according to these requirements

WAC 296-806-42570.

Properly locate emergency "stop" buttons and main shut off valves for ovens

WAC 296-806-42572.

Inspect and test safety devices on ovens

WAC 296-806-42574.

Follow these requirements for peanut-cooling trucks

WAC 296-806-42576.

Follow these requirements for pretzel-rolling, pretzel-stick extruding, rotary, and die machines

WAC 296-806-42578.

Safeguard box and roll-type dough sheeters

WAC 296-806-42580.

Provide proper enclosures for sifters

WAC 296-806-42582.

Follow these requirements for sugar and spice pulverizers

WAC 296-806-42584.

[Statutory Authority: RCW 49.17.010, 49.17.040, 49.17.050, and 49.17.060. 04-14-028, § 296-806-425, filed 6/29/04, effective 1/1/05.]

FACILITIES

WAC 296-806-42502 Provide locks on chamber doors of large air conditioning units.

You must:

• Make sure all door locks on air conditioning unit chambers, that are large enough for employees to enter, can be operated from both inside and outside the chamber.

[Statutory Authority: RCW 49.17.010, 49.17.040, 49.17.050, and 49.17.060. 04-14-028, § 296-806-42502, filed 6/29/04, effective 1/1/05.]

WAC 296-806-42504 Use proper door locks on rack-type bread coolers.

You must:

• Make sure all door locks can be operated from both inside and outside the bread cooler.

[Statutory Authority: RCW 49.17.010, 49.17.040, 49.17.050, and 49.17.060. 04-14-028, § 296-806-42504, filed 6/29/04, effective 1/1/05.]

WAC 296-806-42506 Provide see-through panels on fermentation room doors.

You must:

• Provide shatterproof, see-through panels, made of wire glass or plastic, on fermentation room doors.

[Statutory Authority: RCW 49.17.010, 49.17.040, 49.17.050, and 49.17.060. 04-14-028, § 296-806-42506, filed 6/29/04, effective 1/1/05.]

WAC 296-806-42508 Cover exposed hot pipes.

You must:

• Cover exposed hot (160°F or more) water and steam pipes with insulating material wherever necessary to prevent employee contact.

[Statutory Authority: RCW 49.17.010, 49.17.040, 49.17.050, and 49.17.060. 04-14-028, § 296-806-42508, filed 6/29/04, effective 1/1/05.]

WAC 296-806-42510 Provide extension piping on stationary lubrication fittings.

You must:

• Provide extension piping on stationary lubrication fittings to prevent workers from reaching into the hazardous area when lubricating moving machinery.

[Statutory Authority: RCW 49.17.010, 49.17.040, 49.17.050, and 49.17.060. 04-14-028, § 296-806-42510, filed 6/29/04, effective 1/1/05.]

WAC 296-806-42512 Provide hoods for pan-washing tanks.

Exemption: This requirement does not apply to dishwashers or sanitizers used in restaurants or retail establishments.

You must:

• Provide power-ventilated exhaust hoods over the tank.

[Statutory Authority: RCW 49.17.010, 49.17.040, 49.17.050, and 49.17.060. 04-14-028, § 296-806-42512, filed 6/29/04, effective 1/1/05.]

WAC 296-806-42514 Safeguard proof boxes.

You must:

(1) Make sure all door locks can be operated from both inside and outside the proof box.

(2) Provide guide rails to center the racks as they enter, pass through, and leave the proof box if pans, boards, or trays may be easily dislodged.

Note: Guide rails are not required in proof boxes unless there are two doors with a pass through or pull through design.

[Statutory Authority: RCW 49.17.010, 49.17.040, 49.17.050, and 49.17.060. 04-14-028, § 296-806-42514, filed 6/29/04, effective 1/1/05.]

WAC 296-806-42516 Safeguard storage bins.

Exemption: This requirement does not apply to under-the-counter ingredient bins found in retail stores.

You must:

(1) Provide locks or latches to keep storage bin covers closed, and gaskets or other equivalent devices, to make sure covers are dust tight.

(2) Make sure employees lock covers in the open position when entering bins.

• Covers for bins that employees may enter must have a metal fastener (hasp) and lock that can be locked in the "open" position.

(3) Provide a standard stationary safety ladder on the inside and outside of storage bins with sides more than five feet deep.

• The ends of ladders must be kept away from moving screw conveyors.

• Outside ladders must reach from floor level to the top of the bin.

• Inside ladders must reach from the top of the bin to the bottom of the bin.

(4) Provide an electric interlock on the main entrance cover of large storage bins near the interior exit ladder.

• The interlock needs to prevent feed and unloading screw motors from operating while the cover is open.

Reference: You may need to follow other requirements found in Confined spaces, chapter 296-811 WAC.

[Statutory Authority: RCW 49.17.010, 49.17.040, 49.17.050, and 49.17.060. 04-14-028, § 296-806-42516, filed 6/29/04, effective 1/1/05.]

MATERIAL HANDLING

WAC 296-806-42518 Follow these design requirements for bag lifts (bag arm elevators) and chutes.

You must:

(1) Make sure bag arm elevators with manual takeoff are designed to include:

• Maximum operating capacity of seven bags per minute.

• Spacing of arms on the conveyor chain to obtain the full capacity of the elevator with the lowest possible chain speed.

• An electric limit switch at the unloading end that automatically stops the conveyor chain if any bag does not clear the conveyor arms.

(2) Make sure bag chutes (gravity chutes for handling flour bags) that incline more than thirty degrees from horizontal:

• Are designed to keep the speed of flour bags as low as possible.

• Provide an upturn at the lower end of the chute to slow down the bags.

(3) Prohibit the use of bag or barrel lifts as personnel lifts.

(4) Prohibit manlifts in bakeries.

Definition:

Manlift

A device consisting of a power driven endless belt moving in one direction only, and provided with steps or platforms and handholds attached to it for the transportation of personnel from floor to floor.

[Statutory Authority: RCW 49.17.010, 49.17.040, 49.17.050, and 49.17.060. 04-14-028, § 296-806-42518, filed 6/29/04, effective 1/1/05.]

WAC 296-806-42520 Follow these requirements for chain tackle.

You must:

(1) Mark all chain tackle with the maximum load capacity so the marking is:

• Prominently displayed.

• Legible.

• Permanent.

(2) Mark all chain tackle with minimum support specifications so the marking is legible and permanent.

(3) Use safety hooks with chain tackle.

[Statutory Authority: RCW 49.17.010, 49.17.040, 49.17.050, and 49.17.060. 04-14-028, § 296-806-42520, filed 6/29/04, effective 1/1/05.]

WAC 296-806-42522 Safeguard conveyors.

You must:

(1) Install stop bumpers on all delivery ends of conveyors when products are manually removed.

(2) Make sure all conveyors have "stop" buttons at **all** operating stations.

(3) Provide emergency stop bars or switches at any point where both of these exist:

• The conveyor feeds into a machine;

AND

• Pinch points or catching hazards exist.

Reference: Additional requirements for conveyors are found in WAC 296-806-420.

[Statutory Authority: RCW 49.17.010, 49.17.040, 49.17.050, and 49.17.060. 04-14-028, § 296-806-42522, filed 6/29/04, effective 1/1/05.]

WAC 296-806-42524 Use properly designed covers for screw conveyors (augers).

Exemption: This requirement does not apply to screw conveyors where there are drop or hinged bottom sections that cannot remain airtight.

You must:

• Design covers for screw conveyors that are:

– Removable in convenient sections.

– Held in place with stationary clamps.

■ Locate stationary clamps at intervals that will keep all covers dust tight.

[Statutory Authority: RCW 49.17.010, 49.17.040, 49.17.050, and 49.17.060. 04-14-028, § 296-806-42524, filed 6/29/04, effective 1/1/05.]

WAC 296-806-42526 Safeguard pallet jacks and hand trucks.

You must:

(1) Make sure motorized and nonmotorized pallet jacks have a lock or other device that holds the handle in the vertical position when the hand truck is not in use.

(2) Make sure hand truck casters are set back from corners:

• Locate them back from corners so they do not present a hazard to employee's toes and heels, but not close enough to cause the hand truck to become unstable.

Reference: Motorized hand trucks (pallet jacks) are classified as powered industrial trucks. Additional requirements for powered industrial trucks are found in chapter 296-863 WAC.

[Statutory Authority: RCW 49.17.010, 49.17.040, 49.17.050, and 49.17.060. 04-14-028, § 296-806-42526, filed 6/29/04, effective 1/1/05.]

SPECIFIC FOOD PROCESSING EQUIPMENT

WAC 296-806-42528 Safeguard bakery slicers.

You must:

(1) Provide all slicers with a mechanical device to push the last loaf through the slicer knives.

(2) Equip all slicers with an interlock to deenergize the motor whenever a door, panel, or other point of access to the cutting blades is open.

(3) Protect employees sharpening blades by installing a barrier guard that provides an opening large enough for the sharpening stone to reach and sharpen slicer blades.

(4) Provide automatic braking to stop slicers with endless band knives when the motor is not energized.

[Statutory Authority: RCW 49.17.010, 49.17.040, 49.17.050, and 49.17.060. 04-14-028, § 296-806-42528, filed 6/29/04, effective 1/1/05.]

WAC 296-806-42530 Safeguard bakery wrapping machines.

You must:

(1) Extend or locate mechanical control levers that start and stop slicing machine conveyors and wrapping machines

so an operator can control both machines from either location.

Note:
- The levers should be provided wherever necessary, but arranged so only one station can start the wrapping machine and conveyor assembly.
  - Set up or guard controls to prevent accidental starting.
- The electronic control station for starting and stopping the electric motor that drives the wrapping machine and conveyor should be near the clutch-starting lever.

You must:

(2) Provide a protective cover plate over electric heaters on bakery wrapping machines.

• The cover plate must be properly separated or insulated from heaters so the plate itself is not a burn hazard to operators.

[Statutory Authority: RCW 49.17.010, 49.17.040, 49.17.050, and 49.17.060. 04-14-028, § 296-806-42530, filed 6/29/04, effective 1/1/05.]

WAC 296-806-42532 Provide troughs with antifriction-bearing casters.

You must:

• Provide antifriction-bearing casters on troughs so operators can move and direct them with minimal effort.

[Statutory Authority: RCW 49.17.010, 49.17.040, 49.17.050, and 49.17.060. 04-14-028, § 296-806-42532, filed 6/29/04, effective 1/1/05.]

WAC 296-806-42534 Follow these requirements for trough hoists and similar equipment.

You must:

(1) Mark all hoists and similar equipment with the maximum loading capacity so the marking is:

• Prominently displayed.

• Legible.

• Permanent.

(2) Mark all hoists with minimum support specifications so that the marking is legible and permanent.

(3) Provide safety catches for the chain so that it will hold the load in any position.

(4) Use safety hooks with hoists.

[Statutory Authority: RCW 49.17.010, 49.17.040, 49.17.050, and 49.17.060. 04-14-028, § 296-806-42534, filed 6/29/04, effective 1/1/05.]

WAC 296-806-42536 Follow these requirements for dividers.

You must:

• Enclose or safeguard the moving parts in the back of the divider with **all** of the following:

– A complete cover to enclose **all** moving parts OR an enclosure or guard for each individual part to remove separate hazards.

– A limit switch to shut off the machine when the rear cover is open.

– A hinged guard on the back that cannot be completely removed.

■ If a catch or brace is provided for holding the cover open, make sure it will not release due to vibrations or minor bumping, causing the cover to drop on an employee.

Note: Dividers as discussed in this section utilize pistons, knives and blades to cut and divide large quantities of dough. This does not apply to small vibrating or oscillating rounders.

[Statutory Authority: RCW 49.17.010, 49.17.040, 49.17.050, and 49.17.060. 04-14-028, § 296-806-42536, filed 6/29/04, effective 1/1/05.]

WAC 296-806-42538 Safeguard manually-fed dough and cross-roll brakes.

You must:

(1) Guard the top roll with a heavy-gage metal shield that extends over the roll to within six inches of the hopper bottom board.

Note: The shield may be perforated to allow observation of the dough entering the rolls.

You must:

(2) Provide an emergency "stop" bar that includes a self-engaging brake.

• Locate it so that if the operator falls forward or gets their hands caught in the rolls, their body will press against the bar, causing the rolls to stop instantly by opening the circuit to:

– Deenergize the drive motor.

– Activate a spring-set magnetic brake.

• Activate the emergency "stop" bar before each shift to make sure it is functioning properly.

[Statutory Authority: RCW 49.17.010, 49.17.040, 49.17.050, and 49.17.060. 04-14-028, § 296-806-42538, filed 6/29/04, effective 1/1/05.]

WAC 296-806-42540 Provide a guard or tripping device on reversible dough brakes.

You must:

• Provide a guard or tripping device on each side of the rolls of reversible dough brakes.

– The guard or device must be designed so that it stops the machine or reverses the direction of the rolls, if moved by the operator.

[Statutory Authority: RCW 49.17.010, 49.17.040, 49.17.050, and 49.17.060. 04-14-028, § 296-806-42540, filed 6/29/04, effective 1/1/05.]

WAC 296-806-42542 Follow these requirements for doughnut machines.

You must:

• Provide separate flues for venting both of the following:

– Vapors from the frying section;

AND

– Products of combustion from the combustion chamber used to heat the fat.

[Statutory Authority: RCW 49.17.010, 49.17.040, 49.17.050, and 49.17.060. 04-14-028, § 296-806-42542, filed 6/29/04, effective 1/1/05.]

WAC 296-806-42544 Follow these requirements for dumpbins and blenders.

Definition:

Dumpbin and blender

The part of the flour handling system where the containers of flour are emptied.

You must:

(1) Make sure dumpbin and blender hoods are large enough to prevent circulation of flour dust outside the hoods.

(2) Provide a stop control device for dumpbins and blenders located close to the operator's work station.

(3) Position dumpbins at an appropriate height from the floor so that operators can dump flour from bags without excessive strain or fatigue.

(4) Provide a bag rest stop, when the edge of a dumpbin is more than twenty-four inches above the floor.

[Statutory Authority: RCW 49.17.010, 49.17.040, 49.17.050, and 49.17.060. 04-14-028, § 296-806-42544, filed 6/29/04, effective 1/1/05.]

WAC 296-806-42546 Follow these requirements for flour-handling machines.

You must:

• Make sure the following safeguards are used when flour-handling systems are run in electrical unity with one another:

– When the beginning of the system is located far from its final delivery end, make sure:

■ All electric motors operating the system have one control at each end;

AND

■ Either control will stop all motors.

– Arrange control circuits for magnetic controllers so opening **any** limit switch on an individual unit will deenergize **all** motors on that unit.

[Statutory Authority: RCW 49.17.010, 49.17.040, 49.17.050, and 49.17.060. 04-14-028, § 296-806-42546, filed 6/29/04, effective 1/1/05.]

WAC 296-806-42548 Follow these requirements for traveling or track-type flour scales.

You must:

• Provide bar handles for the moving of traveling or track-type flour scales.

Note: For easier grip, the bar should be at least one inch in diameter.

You must:

• Guard trolley track wheels.

[Statutory Authority: RCW 49.17.010, 49.17.040, 49.17.050, and 49.17.060. 04-14-028, § 296-806-42548, filed 6/29/04, effective 1/1/05.]

WAC 296-806-42550 Follow these requirements for food grinders and cutters.

You must:

• Make sure that food grinders and cutters:

– Have an interlock so machines with removeable hoppers cannot be operated when the hopper is removed:

– Limit access to hoppers where grid guards cannot be used by providing feed conveyors or baffle-type hoppers. Hoppers must be both:

■ Enclosed and provided with hinged covers;

AND

■ Equipped with an electric interlock so the machine will not operate with the cover open.

[Statutory Authority: RCW 49.17.010, 49.17.040, 49.17.050, and 49.17.060. 04-14-028, § 296-806-42550, filed 6/29/04, effective 1/1/05.]

WAC 296-806-42552 Provide covers with interlocks on ingredient premixers, emulsifiers, and similar machines.

You must:

• Provide covers that attach to machines that have top openings.

Note: The covers should be arranged and interlocked so that power to the machine is shut off when the cover is opened far enough for the operator's fingers to come in contact with the beaters.

[Statutory Authority: RCW 49.17.010, 49.17.040, 49.17.050, and 49.17.060. 04-14-028, § 296-806-42552, filed 6/29/04, effective 1/1/05.]

WAC 296-806-42554 Follow these requirements for open fat kettles.

You must:

(1) Keep the floor around kettles in nonslip condition.

(2) Make sure the top of the kettle is at least thirty-six inches above the floor or working level.

[Statutory Authority: RCW 49.17.010, 49.17.040, 49.17.050, and 49.17.060. 04-14-028, § 296-806-42554, filed 6/29/04, effective 1/1/05.]

WAC 296-806-42556 Follow these requirements for steam kettles.

You must:

(1) Provide positive locking devices to hold kettles in the desired position.

(2) Provide safety devices for steam kettles according to:

• The American Society of Mechanical Engineers (ASME) Pressure Vessel Code, section VIII, division I, Unfired Pressure Vessels, 2001, Kettles with Steam Jackets.

[Statutory Authority: RCW 49.17.010, 49.17.040, 49.17.050, and 49.17.060. 04-14-028, § 296-806-42556, filed 6/29/04, effective 1/1/05.]

WAC 296-806-42558 Follow these requirements for chocolate melting, refining, and mixing kettles.

You must:

(1) Provide a cover to enclose the top of the kettle.

(2) Make sure the bottom outlet of each kettle is designed so the operator cannot:

• Reach in to touch the revolving paddle.

• Come in contact with the shear point between the paddle and the side of the kettle.

[Statutory Authority: RCW 49.17.010, 49.17.040, 49.17.050, and 49.17.060. 04-14-028, § 296-806-42558, filed 6/29/04, effective 1/1/05.]

WAC 296-806-42560 Safeguard meat-processing equipment (circular meat-cutting saws).

Exemption: These requirements do not apply to table-top slicers such as those used in delis and restaurants.

Reference: When bandsaws are used to cut meat, follow the requirements in, Make sure bandsaws meet these requirements, WAC 296-806-48042.

You must:

(1) Make sure all circular meat-cutting saws have both:

• Constant pressure controls;

AND

• A brake that automatically begins to stop the blade when the switch is released.

(2) Make sure each circular meat-cutting saw has a protective guard between the operator and the blade.

(3) Provide suspended, counterbalanced circular meat-cutting saws with guards that cover at least **one** of the following:

• Twenty-five degrees of the blade if the saw has two-hand controls;

OR

• Ninety degrees of the blade if the saw can be operated with one hand.

(4) Provide saws that are not suspended with a guard that covers ninety degrees of the blade.

Note: The size of the guard depends on whether it is suspended or has one- or two-handed controls.

[Statutory Authority: RCW 49.17.010, 49.17.040, 49.17.050, and 49.17.060. 04-14-028, § 296-806-42560, filed 6/29/04, effective 1/1/05.]

WAC 296-806-42562 Follow these requirements for horizontal dough mixers.

You must:

(1) Make sure mixers are equipped with both of the following:

• An individual motor and control;

AND

• A conveniently located manual switch that prevents the mixer from being started during servicing or cleaning.

(2) Locate electrical control stations so control operators have a full view of bowls in the "open" position.

• These controls, other than a "stop" switch, must not be duplicated.

(3) Provide mixers with a full enclosure over the bowl that remains closed whenever the agitator is in motion.

• Minor openings in the enclosure during operation, such as ingredient doors and flour inlets, must each be less than one and one-half square feet in area.

Exemption: The full enclosure does not have to remain closed if the mixer has a dumping arrangement that provides safety devices where operators must use both hands in either of these situations:

- When the agitator is in motion under power and the bowl is open more than one-fifth of its total opening;

OR

- When starting the agitator, if the bowl is open more than one-fifth of its total opening.

You must:

(4) Make sure overhead covers or doors that can accidentally close are either:

• Counterbalanced to remain in the "open" position;

OR

• Provided with a catch, brace, or other positive means to hold them open until the operator releases them.

(5) Locate valves and controls that regulate the coolant in mixer jackets so they can be accessed without creating hazards to the operator.

[Statutory Authority: RCW 49.17.010, 49.17.040, 49.17.050, and 49.17.060. 04-14-028, § 296-806-42562, filed 6/29/04, effective 1/1/05.]

WAC 296-806-42564 Follow these requirements for vertical mixers.

You must:

(1) Provide a safeguarding device to protect employees from the point of operation, if the nature of the work exposes them to contact with:

• The pinch point where the mixing tool meets the bowl.

• The catching hazard of the mixing tool.

Note:

- When evaluating exposure, the following conditions need to be considered:
  - How the mixer functions such as visibility of the agitator or ability to accidentally switch the mixer on.
  - How the worker performs operations such as adding ingredients without scraping the bowl or reaching into the bowl when the mixer is in motion.
  - How close the worker gets to the hazard during operation.
  - The worker's tools, clothing, jewelry, or hair that might get caught or fall into mixer.
  - Type of guarding, if any.
  - Slipping or tripping hazards in the area.

You must:

(2) Make sure mixers are equipped with both of the following:

• An individual motor and control;

AND

• A conveniently located manual switch that prevents the mixer from being started during servicing or cleaning.

(3) Make sure overhead panels or doors on mixers that can accidentally close are either:

• Counterbalanced to remain in an open position;

OR

• Provided with catches, braces, or other positive means to hold them open until the operator releases them.

(4) Make sure bowl-locking devices are the type that must be intentionally unlocked by the operator.

(5) Provide devices for moving filled bowls that weigh more than eighty pounds in and out of the mixing position on the machine.

[Statutory Authority: RCW 49.17.010, 49.17.040, 49.17.050, and 49.17.060. 04-14-028, § 296-806-42564, filed 6/29/04, effective 1/1/05.]

WAC 296-806-42566 Follow these requirements for mechanical-feed moulders.

You must:

• Make sure hoppers for mechanical-feed moulders are designed and connected to the proofer so employee's hands cannot contact the in-running rolls.

[Statutory Authority: RCW 49.17.010, 49.17.040, 49.17.050, and 49.17.060. 04-14-028, § 296-806-42566, filed 6/29/04, effective 1/1/05.]

WAC 296-806-42568 Follow these requirements for hand-fed moulders.

You must:

(1) Provide hand-fed moulders with **either** of the following, so employee's hands cannot enter the hopper and contact in-running rolls:

• A hopper that can be extended high enough to protect the employee;

– The top edge of the hopper needs to be well rounded to prevent injury when struck or bumped by an employee's hand;

OR

• A belt feed device.

(2) Provide **each** of these workers with a stopping device that can be easily reached:

• The operator feeding the moulder.

• The employee taking the dough away from the moulder.

[Statutory Authority: RCW 49.17.010, 49.17.040, 49.17.050, and 49.17.060. 04-14-028, § 296-806-42568, filed 6/29/04, effective 1/1/05.]

WAC 296-806-42570 Design, install, and construct your ovens according to these requirements.

You must:

• Make sure all ovens manufactured or installed **before** August 13, 1999 meet or exceed ANSI Z50.1-1947 design, manufacturing, and installation requirements.

• Make sure all ovens manufactured or installed on or **after** August 13, 1999 meet the design, manufacturing, and installation requirements in ANSI/NFPA 86-1999.

[Statutory Authority: RCW 49.17.010, 49.17.040, 49.17.050, and 49.17.060. 04-14-028, § 296-806-42570, filed 6/29/04, effective 1/1/05.]

WAC 296-806-42572 Properly locate emergency "stop" buttons and main shut off valves for ovens.

You must:

(1) Locate emergency stop buttons on mechanical ovens close to where operators are stationed.

(2) Locate main shutoff valves where they can be accessed in case of an emergency.

• Main shutoff valves that permit turning off the fuel or steam in case of an emergency must operate independently of any automatic valves.

[Statutory Authority: RCW 49.17.010, 49.17.040, 49.17.050, and 49.17.060. 04-14-028, § 296-806-42572, filed 6/29/04, effective 1/1/05.]

WAC 296-806-42574 Inspect and test safety devices on ovens.

You must:

(1) Inspect ovens at least twice a month by a formally appointed, properly trained, bakery employee.

• Include the following in your inspection:

– All safety devices.

– Testing of all safety shutoff valves, making sure they are positively tight.

(2) Make sure a representative of the oven manufacturer performs an annual inspection.

(3) Test all piping on ovens to make sure they are gas tight.

(4) Test oven systems as follows:

• Test duct systems on indirect recirculating ovens that operate under pressure for tightness at the following intervals:

– When the oven is first started.

– At least every six months after that.

[Statutory Authority: RCW 49.17.010, 49.17.040, 49.17.050, and 49.17.060. 04-14-028, § 296-806-42574, filed 6/29/04, effective 1/1/05.]

WAC 296-806-42576 Follow these requirements for peanut-cooling trucks.

You must:

• Make sure the entire top of the peanut-cooling truck has a grid-type cover.

[Statutory Authority: RCW 49.17.010, 49.17.040, 49.17.050, and 49.17.060. 04-14-028, § 296-806-42576, filed 6/29/04, effective 1/1/05.]

WAC 296-806-42578 Follow these requirements for pretzel-rolling, pretzel stick extruding, rotary, and die machines.

You must:

• Protect the operator's hands from getting caught in moving parts by doing **at least one** of the following:

– Cover the entire opening of dough hoppers with grid-type guards.

– Extend the hopper higher.

[Statutory Authority: RCW 49.17.010, 49.17.040, 49.17.050, and 49.17.060. 04-14-028, § 296-806-42578, filed 6/29/04, effective 1/1/05.]

WAC 296-806-42580 Safeguard box and roll-type dough sheeters.

You must:

(1) Guard exposed rolls with **either** of these methods:

• Guard the nip point of exposed sheeting rolls at the point where the dough enters the rolls;

OR

• Provide an emergency "stop" bar that extends the length of unguarded rolls that will stop the rolls on contact with the operator, if a barrier guard interferes with machine operation.

(2) Provide a stopping device for hoppers.

• Provide an automatic "stop" bar or stopping device along the back edge of the hopper.

– If machine construction does not allow for this, place the bar or device where it will be most effective.

[Statutory Authority: RCW 49.17.010, 49.17.040, 49.17.050, and 49.17.060. 04-14-028, § 296-806-42580, filed 6/29/04, effective 1/1/05.]

WAC 296-806-42582 Provide proper enclosures for sifters.

You must:

• Make sure enclosures on flour sifters:

– Are dust tight.

– Allow for ease of interior inspection.

[Statutory Authority: RCW 49.17.010, 49.17.040, 49.17.050, and 49.17.060. 04-14-028, § 296-806-42582, filed 6/29/04, effective 1/1/05.]

WAC 296-806-42584 Follow these requirements for sugar and spice pulverizers.

You must:

(1) Remove static electricity by grounding all drive belts used in sugar and spice pulverizers by using metal combs.

(2) Follow the National Fire Protection Association (NFPA) 61-1999, standard for pulverizing sugar and spice grinding in order to prevent fires and dust explosions in agricultural and food products facilities.

(3) Provide magnetic separators to reduce fire and explosion hazards.

[Statutory Authority: RCW 49.17.010, 49.17.040, 49.17.050, and 49.17.060. 04-14-028, § 296-806-42584, filed 6/29/04, effective 1/1/05.]

FORGING MACHINES

WAC 296-806-430 Summary. If your specific machine or operation is not listed here, then follow any general requirements in this section along with the "Requirements for all machines" found in this chapter, WAC 296-806-200 and 296-806-300.

The requirements in this section apply to machines used in the forming of hot metal, such as hot trimming presses, forging hammers, hot forging presses, upsetters, hot bending and hot metal presses, and equipment used in boltheading and rivet making, as well as other forging equipment. For specific forging machine requirements, see Table 430-1.

Exemption: This section does not apply to cold forging operations.

Your responsibility:

To make sure all forging and associated equipment in your workplace are constructed, operated, and maintained in a safe manner.

You must:

GENERAL REQUIREMENTS FOR FORGING MACHINES

Follow these safety requirements when using lead and lead casts

WAC 296-806-43002.

Properly inspect and maintain forging equipment

WAC 296-806-43004.
Use safety blocks on hammers and presses
WAC 296-806-43006.
Make sure tongs meet these requirements
WAC 296-806-43008.
Protect employees when removing scale
WAC 296-806-43010.
Provide adequate foundations for hammers and presses
WAC 296-806-43012.
Follow these requirements for manually operated valves and switches
WAC 296-806-43014.
HAMMERS
Use die keys and shims made of proper-grade material
WAC 296-806-43016.
Provide a safety cylinder head
WAC 296-806-43018.
Provide a shutoff valve
WAC 296-806-43020.
Provide a means for cylinder draining
WAC 296-806-43022.
Follow these requirements for pressure pipes
WAC 296-806-43024.
Follow these requirements when using board hammers
WAC 296-806-43026.
OTHER FORGE FACILITY EQUIPMENT
Protect against sparks from saws
WAC 296-806-43028.

Table 430-1
Specific Requirements for Forging Machines

	Steam hammers	Airlift hammers	Board hammers	Saws
WACs needed in addition to those included under "General Requirements for Forging Machines"				
WAC 296-806-43016 Use die keys and shims made of proper-grade material	X	X		
WAC 296-806-43018 Provide a safety cylinder head	X	X		
WAC 296-806-43020 Provide a shutoff valve	X	X		
WAC 296-806-43022 Provide a means for cylinder draining	X	X		
WAC 296-806-43024 Follow these requirements for pressure pipes	X	X		
WAC 296-806-43026 Follow these requirements when using board hammers			X	
WAC 296-806-43028 Protect against sparks from saws				X

[Statutory Authority: RCW 49.17.010, 49.17.040, 49.17.050, and 49.17.060. 04-14-028, § 296-806-430, filed 6/29/04, effective 1/1/05.]

GENERAL REQUIREMENTS FOR FORGING

WAC 296-806-43002 Follow these safety requirements when using lead and lead casts.

You must:

(1) Provide thermostats for heating elements to prevent overheating.

(2) Provide a means of exhaust for fixed or permanent lead pot installations.

(3) Provide a covered container to store dross skimmings.

(4) Keep equipment clean, especially from accumulations of yellow lead oxide.

Reference:
- For requirements about, Personal protective equipment (PPE), see the Safety and health core rules, WAC 296-800-160.
- For ventilation requirements when using portable lead pot units, see the General occupational health standards, chapter 296-62 WAC.

[Statutory Authority: RCW 49.17.010, 49.17.040, 49.17.050, and 49.17.060. 04-14-028, § 296-806-43002, filed 6/29/04, effective 1/1/05.]

WAC 296-806-43004 Properly inspect and maintain forging equipment.

You must:

• Keep all forge shop equipment in safe operating condition.

• Train personnel in proper inspection and maintenance procedures.

• Establish periodic and regular safety inspections.

• Schedule frequent and regular safety inspections of all guards and point-of-operation protection devices.

• Keep written records of safety inspections that include all of the following:

– Date of the inspection.

– Signature of the person doing the inspection.

– Serial number or other identification for the piece of equipment inspected.

• Safeguard all overhead machinery parts so they do not fly off or fall, if the equipment breaks.

[Statutory Authority: RCW 49.17.010, 49.17.040, 49.17.050, and 49.17.060. 04-14-028, § 296-806-43004, filed 6/29/04, effective 1/1/05.]

WAC 296-806-43006 Use safety blocks on hammers and presses.

You must:

• Use safety blocks on hammers and presses when dies are being changed and maintenance or repair work is being done on the machine.

• Provide safety blocks or wedges that meet or exceed the specifications and dimensions shown in Table 430-2.

Table 430-2
Strength and Dimensions for Wood Safety Blocks or Wedges

Size of timber inches using actual dimensions	**4x4**	**6x6**	**8x8**	**10x10**	**12x12**	
Square inches in cross section	**16**	**36**	**64**	**100**	**144**	
Minimum allowable crushing strength parallel to grain, p.s.i.	**5,000**	**5,000**	**5,000**	**5,000**	**5,000**	**Note:** Adapted from U.S. Department of Agriculture Technical Bulletin 479. Hardwoods recommended are those whose ultimate crushing strengths in compression parallel to grain are 5,000 p.s.i. (pounds per square inch) or greater.
Maximum static load within short column range	**80,000**	**180,000**	**320,000**	**500,000**	**720,000**	**Note:** Slenderness ratio formula for short columns is L/d = 11, where L = length of timber in inches and d = least dimension in inches; this ratio should not exceed 11.
Safety factor	**10**	**10**	**10**	**10**	**10**	
Maximum recommended weight of forging hammer for timber used	**8,000**	**18,000**	**32,000**	**50,000**	**72,000**	
Maximum allowable length of timber in inches	**44**	**66**	**88**	**100**	**132**	

[Statutory Authority: RCW 49.17.010, 49.17.040, 49.17.050, and 49.17.060. 04-14-028, § 296-806-43006, filed 6/29/04, effective 1/1/05.]

WAC 296-806-43008 Make sure tongs meet these requirements.

You must:

• Make sure tongs used with hammers, presses, upsetters, and forging equipment used in boltheading and rivet making, meet the following requirements:

– They are long enough so the worker can use the tongs without standing behind them, in order to avoid injury, in case of kickback.

– The handle ends are not sharp.

Note:
- The worker should be instructed about proper body positions when using tongs.
- Tongs should be checked periodically to see that they remain at the proper hardness level for the job.
- Rings or equivalent devices that are used for locking tongs should be inspected periodically to make sure they are safe.

[Statutory Authority: RCW 49.17.010, 49.17.040, 49.17.050, and 49.17.060. 04-14-028, § 296-806-43008, filed 6/29/04, effective 1/1/05.]

WAC 296-806-43010 Protect employees when removing scale.

You must:

• Protect employees at every hammer and press by:

– Making sure they do not place a hand or arm between the dies by providing them with devices that reach the full length of the die when removing scale. Examples include:

■ Oil swabs.

■ Scale removers.

■ Other devices that remove scale by reaching the full length of the die.

– Stopping flying scale through construction and arrangement of a scale guard that is *of substantial construction* at the back of every hammer and press.

[Statutory Authority: RCW 49.17.010, 49.17.040, 49.17.050, and 49.17.060. 04-14-028, § 296-806-43010, filed 6/29/04, effective 1/1/05.]

WAC 296-806-43012 Provide adequate foundations for hammers and presses.

You must:

• Provide foundations adequate to support the imposed weight and normal work stress for hammers and presses.

– Hammers and presses must remain on their foundations.

[Statutory Authority: RCW 49.17.010, 49.17.040, 49.17.050, and 49.17.060. 04-14-028, § 296-806-43012, filed 6/29/04, effective 1/1/05.]

WAC 296-806-43014 Follow these requirements for manually operated valves and switches.

You must:

• Make sure all manually operated valves and switches are clearly identified and readily accessible for all of the following:

– Presses.

– Upsetters.

– Forging equipment involved in boltheading and rivet making.

[Statutory Authority: RCW 49.17.010, 49.17.040, 49.17.050, and 49.17.060. 04-14-028, § 296-806-43014, filed 6/29/04, effective 1/1/05.]

HAMMERS

WAC 296-806-43016 Use die keys and shims made of proper-grade material.

You must:

• Make sure that die keys and shims are made from a grade of material that will not easily crack or splinter.

Note: Die keys and shims should not project more than two inches in front and four inches in back of the ram or die.

[Statutory Authority: RCW 49.17.010, 49.17.040, 49.17.050, and 49.17.060. 04-14-028, § 296-806-43016, filed 6/29/04, effective 1/1/05.]

WAC 296-806-43018 Provide a safety cylinder head.

You must:

• Make sure that every steam, airlift, or air hammer has a safety cylinder head that acts as a cushion if the rod breaks or pulls out of the ram.

[Statutory Authority: RCW 49.17.010, 49.17.040, 49.17.050, and 49.17.060. 04-14-028, § 296-806-43018, filed 6/29/04, effective 1/1/05.]

WAC 296-806-43020 Provide a shutoff valve.

You must:

• Provide each steam and airlift hammer with a quick-closing emergency valve in the admission pipeline that is distinctly marked and in a convenient location.

– This valve needs to be closed and locked in the "off" position when the hammer is being adjusted, repaired, or serviced, or the dies are being changed.

Reference: For requirements about Lockout/tagout (control of hazardous energy), see chapter 296-803 WAC.

[Statutory Authority: RCW 49.17.010, 49.17.040, 49.17.050, and 49.17.060. 04-14-028, § 296-806-43020, filed 6/29/04, effective 1/1/05.]

WAC 296-806-43022 Provide a means for cylinder draining.

You must:

• Provide a means for draining cylinders on steam hammers.

• Provide airlift hammers with both main head and clamp cylinder drains.

[Statutory Authority: RCW 49.17.010, 49.17.040, 49.17.050, and 49.17.060. 04-14-028, § 296-806-43022, filed 6/29/04, effective 1/1/05.]

WAC 296-806-43024 Follow these requirements for pressure pipes.

You must:

• Provide steam or air pressure piping on power-driven hammers that meets or exceeds the requirements in:

– ANSI B31.1.0-1967, Power Piping, with addenda ANSI B31.1.06-1971, for hammers constructed before January 1, 2005.

– ANSI B31.1.0-2001, Power Piping, with addenda ANSI B31.1.0A-2001, for hammers constructed on or after January 1, 2005.

[Statutory Authority: RCW 49.17.010, 49.17.040, 49.17.050, and 49.17.060. 04-14-028, § 296-806-43024, filed 6/29/04, effective 1/1/05.]

WAC 296-806-43026 Follow these requirements when using board hammers.

You must:

• Securely fasten a suitable enclosure to gravity-dropped board hammers to prevent damaged or detached boards from falling.

• Properly secure all major assemblies and fittings that can loosen and fall.

[Statutory Authority: RCW 49.17.010, 49.17.040, 49.17.050, and 49.17.060. 04-14-028, § 296-806-43026, filed 6/29/04, effective 1/1/05.]

OTHER FORGE FACILITY EQUIPMENT

WAC 296-806-43028 Protect against sparks from saws.

You must:

• Provide all saws with a sheet metal guard that is positioned to stop sparks.

– The guard must be constructed of at least one-eighth inch sheet metal.

Note: It is advisable to provide all saws with a means to trap sparks below the saw and to use a tank of water below the saw to reduce the fire hazard.

Reference: Other saw requirements may be found in, Saws and cutting heads, WAC 296-806-480.

[Statutory Authority: RCW 49.17.010, 49.17.040, 49.17.050, and 49.17.060. 04-14-028, § 296-806-43028, filed 6/29/04, effective 1/1/05.]

GARBAGE (WASTE) DISPOSALS

WAC 296-806-435 Summary. In addition to the requirements in this section, you need to refer to the following sections of this chapter in order to fully protect your employees from machine hazards:

• Requirements for all machines, WAC 296-806-200 and 296-806-300.

This section applies to the hazards associated with garbage (waste) disposals found in the workplace. These requirements are designed to protect employees from hazards associated with the point of operation and flying materials.

Your responsibility:

To protect employees from hazards associated with garbage (waste) disposals.

You must:

Safeguard garbage waste disposal equipment
WAC 296-806-43502.

[Statutory Authority: RCW 49.17.010, 49.17.040, 49.17.050, and 49.17.060. 04-14-028, § 296-806-435, filed 6/29/04, effective 1/1/05.]

WAC 296-806-43502 Safeguard garbage (waste) disposal equipment.

You must:

(1) Protect employees exposed to the hazards of screw conveyor disposals with a properly designed and mounted trimboard cover that remains in place during operation.

(2) Provide guarding to protect employees from contact with knives or blades of disposal units.

• The guards need to be strong enough so that an employee's downward thrusting motion will not cause the guard material to open larger than two inches.

Reference: • You may need to follow additional requirements found in, Make sure guards meet these require-

ments, WAC 296-806-20042, to keep employees from contacting the knives or blades of disposals.

[Statutory Authority: RCW 49.17.010, 49.17.040, 49.17.050, and 49.17.060. 04-14-028, § 296-806-43502, filed 6/29/04, effective 1/1/05.]

GLUE SPREADERS

WAC 296-806-440 Summary. In addition to the requirements in this section, you need to refer to the following sections of this chapter in order to fully protect your employees from machine hazards:

• Requirements for all machines, WAC 296-806-200 and 296-806-300.

This section applies to safeguarding and emergency controls used to protect employees from the hazards associated with cleaning and operating glue spreaders.

Your responsibility:

To protect employees from hazards associated with glue spreaders.

You must:

Provide guards and automatic shutoffs on glue spreaders

WAC 296-806-44002.

[Statutory Authority: RCW 49.17.010, 49.17.040, 49.17.050, and 49.17.060. 04-14-028, § 296-806-440, filed 6/29/04, effective 1/1/05.]

WAC 296-806-44002 Provide guards and automatic shutoffs on glue spreaders.

You must:

• Enclose the in-running side of glue spreaders, leaving enough space to insert stock.

• Provide an emergency stop control, such as a panic bar or similar device, that can be reached from the infeed and outfeed sides of the spreader to shut off the power in an emergency.

Note: You may need two controls to reach the emergency stop control from both the infeed and outfeed sides.

[Statutory Authority: RCW 49.17.010, 49.17.040, 49.17.050, and 49.17.060. 04-14-028, § 296-806-44002, filed 6/29/04, effective 1/1/05.]

IRONWORKERS

WAC 296-806-445 Summary. In addition to the requirements in this section, you need to refer to the following sections of this chapter in order to fully protect your employees from machine hazards:

• Requirements for all machines, WAC 296-806-200 and 296-806-300.

This section applies to the hazards associated with hydraulic and mechanical ironworkers.

Your responsibility:

To protect employees from hazards associated with ironworkers.

You must:

Safeguard ironworkers point of operation

WAC 296-806-44502.

Follow these requirements for adjustable restrictors when safeguarding ironworkers

WAC 296-806-44504.

[Statutory Authority: RCW 49.17.010, 49.17.040, 49.17.050, and 49.17.060. 04-14-028, § 296-806-445, filed 6/29/04, effective 1/1/05.]

WAC 296-806-44502 Safeguard ironworkers point of operation.

You must:

• Safeguard the different operating stations on ironworkers according to requirements for all machines, safeguarding methods, WAC 296-806-20042 through 296-806-20058.

Exemption: If the point-of-operation opening is one-fourth inch or less, safeguarding is not required.

[Statutory Authority: RCW 49.17.010, 49.17.040, 49.17.050, and 49.17.060. 04-14-028, § 296-806-44502, filed 6/29/04, effective 1/1/05.]

WAC 296-806-44504 Follow these requirements for adjustable restrictors when safeguarding ironworkers.

You must:

• Use adjustable restrictors for safeguarding only when guards, devices, or awareness barriers are not feasible.

[Statutory Authority: RCW 49.17.010, 49.17.040, 49.17.050, and 49.17.060. 04-14-028, § 296-806-44504, filed 6/29/04, effective 1/1/05.]

LATHES

WAC 296-806-450 Summary. In addition to the requirements in this section, you need to refer to the following sections of this chapter in order to fully protect your employees from machine hazards:

• Requirements for all machines, WAC 296-806-200 and 296-806-300.

This section applies to the hazards associated with metal and woodworking lathes.

Your responsibility:

To protect employees from hazards associated with metal and woodworking lathes.

METAL LATHES

You must:

Provide shields or guards on metal lathes for chip or coolant hazards

WAC 296-806-45002.

Safeguard work-holding devices (chucks)

WAC 296-806-45004.

Follow these requirements for chip control and handling

WAC 296-806-45006.

Safeguard power-clamping devices

WAC 296-806-45008.

Restrain extended workpieces on horizontal lathes

WAC 296-806-45010.

WOODWORKING LATHES

Guard cutting heads on profile lathes and swing-head lathes

WAC 296-806-45012.

Guard cutting heads on turning lathes

WAC 296-806-45014.

Guard automatic turning lathes

WAC 296-806-45016.

Guard wood lathes used for turning long pieces of stock

WAC 296-806-45018.

[Statutory Authority: RCW 49.17.010, 49.17.040, 49.17.050, and 49.17.060. 04-14-028, § 296-806-450, filed 6/29/04, effective 1/1/05.]

METAL LATHES

WAC 296-806-45002 Provide shields or guards on metal lathes for chip or coolant hazards.

You must:

• Provide a shield or other equally effective guard to prevent chips or coolant from being thrown or splashed on the operator, aisle, or other assigned work area, when exposed to these hazards.

– Examples of guards include permanent chip and coolant shields.

[Statutory Authority: RCW 49.17.010, 49.17.040, 49.17.050, and 49.17.060. 04-14-028, § 296-806-45002, filed 6/29/04, effective 1/1/05.]

WAC 296-806-45004 Safeguard work-holding devices (chucks).

You must:

• Provide a fixed or movable guard, device, awareness barrier, or peripheral cover over areas exposed to the operator on work-holding devices or chucks when:

– It is in the clamped mode and has parts that extend beyond the outside diameter of the holding device.

– It has an irregular shape to the periphery of its body.

[Statutory Authority: RCW 49.17.010, 49.17.040, 49.17.050, and 49.17.060. 04-14-028, § 296-806-45004, filed 6/29/04, effective 1/1/05.]

WAC 296-806-45006 Follow these requirements for chip control and handling.

You must:

• Make sure employees' hands do not contact chips that are being generated, such as long stringy chips.

Note: Chips may be removed by using things such as tools, pullers, brushes, and shovels.

[Statutory Authority: RCW 49.17.010, 49.17.040, 49.17.050, and 49.17.060. 04-14-028, § 296-806-45006, filed 6/29/04, effective 1/1/05.]

WAC 296-806-45008 Safeguard power-clamping devices.

You must:

• Protect the operator from the hazards of thrown material when the clamping device does not have adequate pressure to hold the material.

Note:
- Examples of safeguarding methods include:
  - Interlocks.
  - Retaining covers:
    - That contain the workpiece if it falls or flies out from the clamped work-holding device.
  - Visual or audible warnings:
    - That are located so they can be seen or heard by the operator in the normal work area, making the operator aware that there is no pressure on the clamp side of the actuator.

[Statutory Authority: RCW 49.17.010, 49.17.040, 49.17.050, and 49.17.060. 04-14-028, § 296-806-45008, filed 6/29/04, effective 1/1/05.]

WAC 296-806-45010 Restrain extended workpieces on horizontal lathes.

You must:

• Safeguard employees from the hazards of work pieces that extend beyond the edges of the horizontal lathe by:

– Restraining work pieces as needed to prevent whipping;

AND

– Isolating work pieces with an awareness barrier, fixed or movable guard, or railing.

[Statutory Authority: RCW 49.17.010, 49.17.040, 49.17.050, and 49.17.060. 04-14-028, § 296-806-45010, filed 6/29/04, effective 1/1/05.]

WOODWORKING LATHES

WAC 296-806-45012 Guard cutting heads on profile lathes and swing-head lathes.

You must:

• Cover all cutting heads on profile lathes, swing-head lathes, and heel-turning machines with a metal guard.

• Make sure guards are made of:

– Sheet metal at least one-sixteenth inches thick.

– Cast iron at least three-sixteenth inches thick.

[Statutory Authority: RCW 49.17.010, 49.17.040, 49.17.050, and 49.17.060. 04-14-028, § 296-806-45012, filed 6/29/04, effective 1/1/05.]

WAC 296-806-45014 Guard cutting heads on turning lathes.

You must:

• Install hoods or shields that cover as completely as possible all cutting heads, whether or not they rotate.

Note: The hood or shield should be hinged to the machine so it can be moved to make adjustments.

[Statutory Authority: RCW 49.17.010, 49.17.040, 49.17.050, and 49.17.060. 04-14-028, § 296-806-45014, filed 6/29/04, effective 1/1/05.]

WAC 296-806-45016 Guard automatic turning lathes.

You must:

• Install hoods that completely enclose the cutter blades, except at contact points where stock is being cut, on the following types of machines:

– Shoe last and spoke lathes.

– Doweling machines.

– Heel-turning machines.

– Automatic turning lathes with rotating knives.

[Statutory Authority: RCW 49.17.010, 49.17.040, 49.17.050, and 49.17.060. 04-14-028, § 296-806-45016, filed 6/29/04, effective 1/1/05.]

WAC 296-806-45018 Guard wood lathes used for turning long pieces of stock.

You must:

• Install long, curved guards extending over lathe tops where work pieces are held only between the two centers, to prevent stock from being thrown out of the machine.

[Statutory Authority: RCW 49.17.010, 49.17.040, 49.17.050, and 49.17.060. 04-14-028, § 296-806-45018, filed 6/29/04, effective 1/1/05.]

MECHANICAL POWER PRESSES

WAC 296-806-455 Summary. In addition to the requirements in this section, you need to refer to the following sections of this chapter in order to fully protect your employees from machine hazards:

• Requirements for all machines, WAC 296-806-200 and 296-806-300.

This section applies to mechanically powered machines that transmit force to cut, form, or assemble metal or other

materials through tools or dies attached to or operated by slides.

Exemption: This section does not apply to:
- Power press brakes.
- Hydraulic power presses.
- Pneumatic power presses.
- Slow-acting horizontal mechanical presses with large beds (bulldozers).
- Hot bending and hot metal presses.
- Forging presses and hammers.
- Riveting machines.
- Cold headers and cold formers.
- Eyelet machines.
- High energy rate presses.
- Ironworkers and detail punches.
- Metal shears.
- Powdered metal presses.
- Press welders.
- Turret and plate punching machines.
- Wire termination machines.
- Welding presses.

Reference:
- See, Forging machines, for forging press and hammer requirements, WAC 296-806-430.
- See, Ironworkers, for requirements for ironworkers, WAC 296-806-445.
- See, Press brakes, for power press brake requirements, WAC 296-806-465.

Your responsibility:

To make sure mechanical power presses meet the requirements of this section.

You must:

Design and construction

Make sure mechanical power presses are properly designed and constructed

WAC 296-806-45502.

Safeguarding

Safeguard presses that use unitized tooling

WAC 296-806-45504.

Protect operators from guidepost hazards

WAC 296-806-45506.

Safeguard the point of operation

WAC 296-806-45508.

Make sure point-of-operation guards are properly designed and constructed

WAC 296-806-45510.

Make sure barrier guards used to safeguard the point of operation meet these requirements

WAC 296-806-45512.

Make sure point-of-operation devices are effective

WAC 296-806-45514.

Make sure presence-sensing devices used to safeguard the point of operation meet these requirements

WAC 296-806-45516.

Make sure pull-back devices used to safeguard the point of operation meet these requirements

WAC 296-806-45518.

Make sure restraint (holdout) devices used to safeguard the point of operation meet these requirements

WAC 296-806-45520.

Make sure two-hand control devices used to safeguard the point of operation meet these requirements

WAC 296-806-45522.

Make sure two-hand trip devices used to safeguard the point of operation meet these requirements

WAC 296-806-45524.

Provide additional safeguards when the operator puts one or both hands into the point of operation

WAC 296-806-45526.

Operations

Establish a die setting procedure

WAC 296-806-45528.

Handle dies safely

WAC 296-806-45530.

Protect die setters during setup and tryout

WAC 296-806-45532.

Train press operators

WAC 296-806-45534.

Operate mechanical power presses safely

WAC 296-806-45536.

Provide tools and other means to protect press operators

WAC 296-806-45538.

Inspect and maintain presses

WAC 296-806-45540.

Make sure presses and operating practices used in the PSDI mode of operation meet these requirements

WAC 296-806-45542.

[Statutory Authority: RCW 49.17.010, 49.17.040, 49.17.050, and 49.17.060. 04-14-028, § 296-806-455, filed 6/29/04, effective 1/1/05.]

DESIGN AND CONSTRUCTION

WAC 296-806-45502 Make sure mechanical power presses are properly designed and constructed.

You must:

• Make sure mechanical power presses manufactured **before** January 1, 2005, meet the requirements of American National Standards Institute (ANSI) B11.1-1971, Safety Requirements for the Construction, Care, and Use of Mechanical Power Presses.

• Make sure mechanical power presses manufactured, reconstructed, or modified **on or after** January 1, 2005, meet the requirements of ANSI B11.1-2001, Safety Requirements for Mechanical Power Presses.

[Statutory Authority: RCW 49.17.010, 49.17.040, 49.17.050, and 49.17.060. 04-14-028, § 296-806-45502, filed 6/29/04, effective 1/1/05.]

SAFEGUARDING

WAC 296-806-45504 Safeguard presses that use unitized tooling.

You must:

• Safeguard the opening between the top of the punch holder and the face of the slide or striking pad by using properly installed, adjusted, and maintained guards or devices.

[Statutory Authority: RCW 49.17.010, 49.17.040, 49.17.050, and 49.17.060. 04-14-028, § 296-806-45504, filed 6/29/04, effective 1/1/05.]

WAC 296-806-45506 Protect operators from guidepost hazards.

You must:

• Use properly installed, adjusted, and maintained guards or devices to protect operators from the hazards created by:

– Guideposts separating from their bushings.

– Similar pinch points between the slide (moving die) and fixed die or press attachments.

Exemption: This requirement does not apply if the opening is one-fourth inch or less, before use.

[Statutory Authority: RCW 49.17.010, 49.17.040, 49.17.050, and 49.17.060. 04-14-028, § 296-806-45506, filed 6/29/04, effective 1/1/05.]

WAC 296-806-45508 Safeguard the point of operation.

You must:

• Protect employees from point-of-operation hazards by using properly installed, adjusted, and maintained guards or devices.

Exemption: This requirement does not apply if the point-of-operation opening is one-fourth inch or less, before use.

Note:
- You may use a combination of guards and devices as long as employees are completely protected from point-of-operation hazards.
- Hand tools used for placing materials into the press, or removing them from the press, are not a substitute for point-of-operation guards or devices.

[Statutory Authority: RCW 49.17.010, 49.17.040, 49.17.050, and 49.17.060. 04-14-028, § 296-806-45508, filed 6/29/04, effective 1/1/05.]

WAC 296-806-45510 Make sure point-of-operation guards are properly designed and constructed.

You must:

• Make sure each guard:

– Prevents the operator's hands or other body parts from reaching through, over, under, or around the guard into the point of operation.

– Has no opening larger than the maximum permissible openings shown in Table 200-1, Largest Allowable Guard Openings, WAC 296-806-20042.

– Does not create a pinch point between the guard and moving machine parts.

– Uses fasteners that cannot be easily removed by the operator.

– Is easy to inspect.

– Provides the best view of the point of operation for the type of work.

[Statutory Authority: RCW 49.17.010, 49.17.040, 49.17.050, and 49.17.060. 04-14-028, § 296-806-45510, filed 6/29/04, effective 1/1/05.]

WAC 296-806-45512 Make sure barrier guards meet these requirements.

You must:

• Make sure a fixed barrier guard is attached to a fixed surface such as the stripper, die shoe, press frame, or bolster plate.

• Make sure the interlocked barrier guard:

– Is attached to a fixed surface such as the press frame or bolster plate.

– Prevents cycling (stroking) of the press when the interlocked section of the guard is not in the protecting position.

– Cannot open until hazardous motion of the slide has stopped.

• Not use the hinged or movable sections of an interlocked barrier guard for manual feeding.

• Make sure an adjustable barrier guard is:

– Attached to a fixed surface such as the press frame, bolster plate, or die shoe.

– Adjusted only by authorized persons who can apply Table 200-1, Largest Allowable Guard Openings, WAC 296-806-20042.

Reference: See, Provide additional safeguards when the operator puts one or both hands into the point of operation, WAC 296-806-45526, for additional safeguards that are required if the operator puts one or both hands into the point of operation to feed or remove parts, and the point of operation is protected by a Type B gate or movable barrier device.

[Statutory Authority: RCW 49.17.010, 49.17.040, 49.17.050, and 49.17.060. 04-14-028, § 296-806-45512, filed 6/29/04, effective 1/1/05.]

WAC 296-806-45514 Make sure point-of-operation devices are effective.

You must:

• Make sure point-of-operation devices protect the operator from hazards as shown in Table 455-1, Point-of-Operation Devices.

• Make sure the motor start button is protected against accidental contact.

Table 455-1
Point-of-Operation Devices

Type of device	Type of operator protection that must be provided:
Presence-sensing device (part-revolution clutch press)	If the operator's hands or other body part are in the point of operation: • Prevents initiating a press cycle (stroke); **OR** • Stops the press during the closing portion of the cycle (stroke)
Presence-sensing device (full-revolution clutch press)	Do **NOT** use for point-of-operation safeguarding
Pull-back device	As the die closes: • Withdraws the operator's hands if they are located in the point of operation; **OR** • Prevents the operator from reaching into the point of operation
Restraint (holdout) device	Prevents the operator from reaching into the point of operation at all times
Two-hand control device Two-hand trip device	• Requires operators to use both hands to activate controls that are far enough away from the point of operation so the slide completes the closing portion of the cycle (stroke) or stops before they can reach into the point of operation
Type A gate or movable barrier device	Encloses the point of operation: • Before a press cycle (stroke) can be initiated; **AND** • Remains closed until slide motion has stopped
Type B gate or movable barrier device	Encloses the point of operation: • Before a press cycle (stroke) can be initiated; **AND**

Table 455-1
Point-of-Operation Devices

Type of device	Type of operator protection that must be provided:
	• Remains closed until slide motion has stopped during the closing portion of the cycle (stroke)
Sweep device	Do **NOT** use for point-of-operation safeguarding

[Statutory Authority: RCW 49.17.010, 49.17.040, 49.17.050, and 49.17.060. 04-14-028, § 296-806-45514, filed 6/29/04, effective 1/1/05.]

WAC 296-806-45516 Make sure presence-sensing devices used to safeguard the point of operation meet these requirements.

You must:

• Make sure the presence-sensing device is interlocked into the control circuit to prevent or stop slide motion if the operator's hand or other body part is within the sensing field of the device during the downstroke of the press slide.

• Make sure muting of the device is done only during the upstroke of the press slide.

• Make sure failure of **any** component of the device:

– Does not prevent normal stopping action of the press.

– Prevents initiation of another cycle (stroke) until corrected.

– Is indicated by the system.

• Use guards to protect all areas of entry to the point of operation not protected by the presence-sensing device.

• Make sure the sensing field of the device is located farther from the point of operation than the minimum safety distance as determined by the following formula:

D = 63 x T

Where:

D = minimum safety distance (in inches)

T = stopping time of the press measured at approximately the 90 degree position of crankshaft rotation (in seconds)

Example: The number in the formula represents the hand speed of the operator (sixty-three inches per second). If your press has a stopping time of one-half second (.5 second), the calculations would be:
D = 63 x .5 = 31.5
The sensing field would need to be at least thirty-one and one-half inches from the point of operation.

Reference: See, Provide additional safeguards when the operator puts one or both hands into the point of operation, WAC 296-806-45526, while feeding or removing parts, for additional safeguards that are required if the operator puts one or both hands into the point of operation to feed or remove parts, and the point of operation is protected by a presence-sensing device.

[Statutory Authority: RCW 49.17.010, 49.17.040, 49.17.050, and 49.17.060. 04-14-028, § 296-806-45516, filed 6/29/04, effective 1/1/05.]

WAC 296-806-45518 Make sure pull-back devices used to safeguard the point of operation meet these requirements.

You must:

• Make sure presses requiring more than one operator have a separate pull-back device for each operator.

• Make sure each pull-back device has attachments:

– For each of the operator's hands.

– That are connected to and operated only by the press slide or its attached die.

– That are adjusted to either:

■ Prevent the operator from reaching into the point of operation;

OR

■ Withdraw the operator's hands from the point of operation before the dies close.

• Check each pull-back device that is being used for proper adjustment at these times:

– At the start of each operator shift.

– After a new die set-up.

– When operators are changed.

• Complete necessary maintenance or repair work before operating the press.

Reference: For recordkeeping requirements for maintenance or repair work, see Inspect and maintain presses, WAC 296-806-45540.

[Statutory Authority: RCW 49.17.010, 49.17.040, 49.17.050, and 49.17.060. 04-14-028, § 296-806-45518, filed 6/29/04, effective 1/1/05.]

WAC 296-806-45520 Make sure restraint (holdout) devices used to safeguard the point of operation meet these requirements.

You must:

• Make sure presses requiring more than one operator have separate restraint devices for each operator.

• Make sure each restraint device has attachments:

– For each of the operator's hands.

– That are securely anchored.

– That are adjusted so the operator cannot reach into the point of operation.

[Statutory Authority: RCW 49.17.010, 49.17.040, 49.17.050, and 49.17.060. 04-14-028, § 296-806-45520, filed 6/29/04, effective 1/1/05.]

WAC 296-806-45522 Make sure two-hand control devices used to safeguard the point of operation meet these requirements.

You must:

• Make sure presses that require more than one operator:

– Have separate two-hand controls for each operator.

– Need concurrent application of all operators' controls to activate the slide.

• Make sure the slide stops if any operator's hand is removed from a control button.

• Make sure two-hand controls are fixed in position and can be moved only by authorized persons.

• Make sure the controls are located farther from the point of operation than the minimum safety distance as determined by the following formula:

D = 63 x T

Where:

D = minimum safety distance (in inches)

T = stopping time of the press measured at approximately the 90 degree position of crankshaft rotation (in seconds)

Example: The number in the formula represents the hand speed of the operator (63 inches per second). If your press has a stopping time of one-half second (.5 second), the calculations would be:
D = 63 x .5 = 31.5
The controls would need to be at least 31 1/2 inches from the point of operation.

Reference: See, Provide additional safeguards when the operator puts one or both hands into the point of operation, WAC 296-806-45526, for additional required safeguards.

[Statutory Authority: RCW 49.17.010, 49.17.040, 49.17.050, and 49.17.060. 04-14-028, § 296-806-45522, filed 6/29/04, effective 1/1/05.]

WAC 296-806-45524 Make sure two-hand trip devices used to safeguard the point of operation meet these requirements.

You must:

• Make sure presses requiring more than one operator:

– Have separate two-hand trips for each operator.

– Need concurrent application of all operators' controls to activate the slide.

• Make sure the two-hand trips are fixed in position and can be moved only by authorized persons.

• Make sure the controls are located farther from the point of operation than the minimum safety distance as determined by the following formula:

D = 63 x T

Where:

D = minimum safety distance (in inches)

T = the maximum time the press takes for the die to close after the press has been tripped (in seconds)

Example: The number in the formula represents the hand speed of the operator (63 inches per second). If your press has a die closing time of one-half second (.5 second), the calculations would be:
D = 63 x .5 = 31.5
The trip devices would need to be at least 31 1/2 inches from the point of operation.

[Statutory Authority: RCW 49.17.010, 49.17.040, 49.17.050, and 49.17.060. 04-14-028, § 296-806-45524, filed 6/29/04, effective 1/1/05.]

WAC 296-806-45526 Provide additional safeguards when the operator puts one or both hands into the point of operation.

IMPORTANT:

This rule applies when the operator puts one or both hands into the point of operation to feed or remove parts, and the point of operation is protected by **any** of the following:

• Presence-sensing device.

• Two-hand control.

• Type B gate or movable barrier device.

You must:

• Make sure the press has both a:

– Stopping-performance monitor (previously called brake-system monitor);

AND

– Control system that monitors the performance of safety-related functions (previously called control reliability).

• Make sure the stopping-performance monitor meets the requirements of:

– American National Standards Institute (ANSI) B11.1-1982, Mechanical Power Presses - Safety Requirements for Construction, Care, and Use for presses manufactured **before** January 1, 2005.

– ANSI B11.1-2001, Safety Requirements for Mechanical Power Presses for presses manufactured **on or after** January 1, 2005.

• Make sure the control system monitors the performance of safety-related functions so that failure of any component in the control system:

– Does not prevent normal stopping action of the press.

– Prevents initiation of another cycle (stroke) until the failure is corrected.

– Can be detected by a simple test or is indicated by the control system.

Exemption: This requirement does not apply to control system components that do not affect protection from point-of-operation hazards.

Definition:

The control system includes the sensors, manual input and mode selection elements, interlocking and decision-making circuitry, and output elements of the press-operating devices and mechanisms.

[Statutory Authority: RCW 49.17.010, 49.17.040, 49.17.050, and 49.17.060. 04-14-028, § 296-806-45526, filed 6/29/04, effective 1/1/05.]

OPERATIONS

WAC 296-806-45528 Establish die setting procedures.

You must:

• Develop and use procedures to protect employees from the hazards of die setting.

• Make sure die setters are provided with at least the following information:

– Rated press capacity requirements for the die.

– Weight of the upper die and other slide attachments required for job setup and setting counterbalance air pressure.

– Total die weight.

Note: This information may be stamped on the die or kept in a file that is readily available to the die setters.

[Statutory Authority: RCW 49.17.010, 49.17.040, 49.17.050, and 49.17.060. 04-14-028, § 296-806-45528, filed 6/29/04, effective 1/1/05.]

WAC 296-806-45530 Handle dies safely.

You must:

• Make sure dies requiring mechanical handling have handling equipment attachment points.

• Use die stops or other means to prevent losing control of the die while setting or removing dies from presses that are inclined.

• Make sure the upper and lower shoes will securely mount the die to the bolster and slide.

• Use additional means of securing the upper shoe to the slide where clamp caps or set screws are used in conjunction with punch stems.

• Make sure spring-loaded turnover bars are provided for presses designed to accept them.

[Statutory Authority: RCW 49.17.010, 49.17.040, 49.17.050, and 49.17.060. 04-14-028, § 296-806-45530, filed 6/29/04, effective 1/1/05.]

WAC 296-806-45532 Protect die setters during setup and tryout.

You must:

(1) Use safety blocks when an employee has to put their hands or other body part into the point of operation to adjust or repair dies.

(2) Protect die setters doing die tryout from point-of-operation hazards by **at least one** of the following:

• Properly installed, adjusted, and maintained guards or devices.

• Proper use of INCH mode (part-revolution clutch press).

• Proper use of JOG mode (full-revolution clutch press).

[Statutory Authority: RCW 49.17.010, 49.17.040, 49.17.050, and 49.17.060. 04-14-028, § 296-806-45532, filed 6/29/04, effective 1/1/05.]

WAC 296-806-45534 Train press operators.

You must:

(1) Train operators to safely operate the press.

(2) Make sure modified or reconstructed presses have instructions to establish new or changed guidelines for use and care of the press.

[Statutory Authority: RCW 49.17.010, 49.17.040, 49.17.050, and 49.17.060. 04-14-028, § 296-806-45534, filed 6/29/04, effective 1/1/05.]

WAC 296-806-45536 Operate mechanical power presses safely.

You must:

• Operate the press within the manufacturer's rated capacities.

Note: Rated capacities include, but are not limited to:
– Structural capacity.
– Torque capacity.
– Energy capacity.
– Thermal capacity.
– Attachment weight.
– Die shutheight.

[Statutory Authority: RCW 49.17.010, 49.17.040, 49.17.050, and 49.17.060. 04-14-028, § 296-806-45536, filed 6/29/04, effective 1/1/05.]

WAC 296-806-45538 Provide tools and other means to protect press operators.

You must:

• Make sure hand tools are provided and used to free and remove workpieces or scrap stuck in the die.

• Provide means for handling scrap from roll feed or random length stock operations.

• Provide and use means to keep operators and die setters from reaching into the point of operation or other hazard area to lubricate material or die components.

Note:
• Means for lubricating include, but are not limited to:
– Brushes.
– Swabs.
– Lubricating rolls.
– Manual spray systems.
– Automatic spray systems.
• Handles on brushes or swabs should be long enough to keep persons using them clear of the point of operation.

[Statutory Authority: RCW 49.17.010, 49.17.040, 49.17.050, and 49.17.060. 04-14-028, § 296-806-45538, filed 6/29/04, effective 1/1/05.]

WAC 296-806-45540 Inspect and maintain presses.

You must:

(1) Make sure maintenance personnel are trained and competent to inspect and maintain power presses.

(2) Keep records of all maintenance or repair work.

(3) Inspect and test the following press systems **at least weekly:**

• Clutch/brake mechanism.

• Antirepeat feature.

• Single stroke mechanism.

• Keep records of inspections and tests.

Exemption: You do not have to do weekly inspections if your press has both:
– Performance of safety-related functions monitoring (previously called control reliability);
AND
– A stopping-performance monitor (previously called brake-system monitor) does not require weekly inspections.

Reference: For requirements for these monitoring devices, see Provide additional safeguards when the operator puts one or both hands into the point of operation, WAC 296-806-45526.

[Statutory Authority: RCW 49.17.010, 49.17.040, 49.17.050, and 49.17.060. 04-14-028, § 296-806-45540, filed 6/29/04, effective 1/1/05.]

WAC 296-806-45542 Make sure presses and operating practices used in the PSDI (presence sensing device initiation) mode of operation meet these requirements.

You must:

• Make sure presses and operating practices used in the PSDI mode meet the requirements of 29 CFR 1910.217(h), Presence Sensing Device Initiation (PSDI).

Note: 29 CFR 1910.217(h) contains requirements for certification and validation of mechanical power presses used in the PSDI mode of operation.

[Statutory Authority: RCW 49.17.010, 49.17.040, 49.17.050, and 49.17.060. 04-14-028, § 296-806-45542, filed 6/29/04, effective 1/1/05.]

MILLS

WAC 296-806-460 Summary. In addition to the requirements in this section, you need to refer to the following sections of this chapter in order to fully protect your employees from machine hazards:

• Requirements for all machines, WAC 296-806-200 and 296-806-300.

This section applies only to mills in the rubber and plastics industry that have in-running metal rolls that are set horizontally and run toward each other.

Your responsibility:

To protect employees from hazards associated with mills.

You must:

Meet height requirements for mill rolls
WAC 296-806-46002.
Provide mill safety controls
WAC 296-806-46004.
Follow these stopping limit requirements for mills
WAC 296-806-46006.

[Statutory Authority: RCW 49.17.010, 49.17.040, 49.17.050, and 49.17.060. 04-14-028, § 296-806-460, filed 6/29/04, effective 1/1/05.]

WAC 296-806-46002 Meet height requirements for mill rolls.

You must:

• Make sure that the tops of mill rolls installed after August 27, 1971, are at least fifty inches above the working level where the operator stands.

– This distance applies to the actual working level, which could be:

■ The general floor level.

■ In a pit.

■ On a platform.

[Statutory Authority: RCW 49.17.010, 49.17.040, 49.17.050, and 49.17.060. 04-14-028, § 296-806-46002, filed 6/29/04, effective 1/1/05.]

WAC 296-806-46004 Provide mill safety controls.

Exemption: These rules do not apply to mills if the machinery is permanently set up so employees:
- Cannot reach through, over, under, or around to come in contact with the roll bite;

OR
- Cannot be caught between a roll and nearby objects.

You must:

(1) Provide a safety trip control that is easy to reach, operates readily on contact, and is located in front and back of each mill. Each safety trip control must include at least one of the following:

• Pressure-sensitive body bars that:

– Are installed at the front and back of mills having a forty-six inch roll height or over.

– Operate readily on contact from the pressure of the mill operator's body.

• Safety trip rods that are:

– Installed in the front and back of each mill and located within two inches of the front and rear rolls.

– Installed so the top rods are no more than seventy-two inches above the level where the operator stands.

– Easy to reach and operate when the rods are pushed or pulled.

• Safety tripwire cables or wire center cords that are:

– Installed in the front and back of each mill.

– Located within two inches of the face of the rolls.

– Installed so that cables are no more than seventy-two inches above the level where the operator stands.

– Easy to operate whether pushed or pulled.

(2) Make sure that all auxiliary equipment such as mill dividers, support bars, spray pipes, feed conveyors, and strip knives do not interfere with safety devices.

[Statutory Authority: RCW 49.17.010, 49.17.040, 49.17.050, and 49.17.060. 04-14-028, § 296-806-46004, filed 6/29/04, effective 1/1/05.]

WAC 296-806-46006 Follow these stopping limit requirements for mills.

You must:

• Make sure that mills are stopped within one and one-half percent of the fastest speed at which they operate when empty.

– When mills operate at more than two hundred fifty feet per minute, stopping distances above one and one-half percent of their fastest speed are allowed, but must have engineering support.

[Statutory Authority: RCW 49.17.010, 49.17.040, 49.17.050, and 49.17.060. 04-14-028, § 296-806-46006, filed 6/29/04, effective 1/1/05.]

PRESS BRAKES

WAC 296-806-465 Summary. If your specific machine or operation is not listed here, then follow any general requirements in this section along with the "Requirements for all machines" in this chapter, WAC 296-806-200 and 296-806-300.

This section applies to all machines classified as power press brakes. Power press brakes use a ram and bed to bend material.

Your responsibility:

To protect employees from hazards associated with power press brakes.

You must:

General requirements for press brakes

Provide auxiliary safety aids

WAC 296-806-46502.

Safeguard the point of operation on press brakes

WAC 296-806-46504.

Safe distance safeguarding

Follow this requirement when using safe distance safeguarding

WAC 296-806-46506.

Develop a safe distance safeguarding program

WAC 296-806-46508.

Follow these requirements for safe distance training

WAC 296-806-46510.

Require safe distance retraining

WAC 296-806-46512.

Conduct periodic safe distance inspections

WAC 296-806-46514.

Supervise the safe distance program

WAC 296-806-46516.

[Statutory Authority: RCW 49.17.010, 49.17.040, 49.17.050, and 49.17.060. 04-14-028, § 296-806-465, filed 6/29/04, effective 1/1/05.]

GENERAL REQUIREMENTS FOR PRESS BRAKES

WAC 296-806-46502 Provide auxiliary safety aids on press brakes.

IMPORTANT:

This rule applies if the safeguarding method prevents the operator from holding the work piece during the closing of the stroke.

You must:

• Provide one of the following auxiliary safety aids that will allow operators to remove their hands from the work during the closing of the stroke:

– Work supporting devices.

– Magnetic material-position gages.

[Statutory Authority: RCW 49.17.010, 49.17.040, 49.17.050, and 49.17.060. 04-14-028, § 296-806-46502, filed 6/29/04, effective 1/1/05.]

WAC 296-806-46504 Safeguard the point of operation on press brakes.

You must:

• Safeguard the point of operation on press brakes by at least one of the following:

– Physical guards.

– Devices.

– One-quarter inch maximum die opening.

– Safe distance safeguarding if **all** of the following apply:

■ Physical barriers and devices such as two-hand controls, holdouts, restraints, and presence sensors, are demonstrated to not be feasible.

■ This safeguarding method is only for one-time fabrication, custom made parts, or small quantity runs of no more than four hours per month.

■ A safety program is provided that includes safe work procedures, training, and supervision to make sure work is performed using safe distance measures.

■ There is no workplace record of injuries from failing to maintain a safe distance.

[Statutory Authority: RCW 49.17.010, 49.17.040, 49.17.050, and 49.17.060. 04-14-028, § 296-806-46504, filed 6/29/04, effective 1/1/05.]

SAFE DISTANCE SAFEGUARDING

WAC 296-806-46506 Follow this requirement when using safe distance safeguarding.

You must:

• Make sure employees position themselves no closer than necessary and never closer than four inches from the power press brake point of operation.

[Statutory Authority: RCW 49.17.010, 49.17.040, 49.17.050, and 49.17.060. 04-14-028, § 296-806-46506, filed 6/29/04, effective 1/1/05.]

WAC 296-806-46508 Develop a safe distance safeguarding program for press brakes.

You must:

• Develop, document, and use an effective safe distance safeguarding program.

– Include methods for maintaining the minimum safe distance requirements in, Follow this requirement when using safe distance safeguarding, WAC 296-806-46506.

[Statutory Authority: RCW 49.17.010, 49.17.040, 49.17.050, and 49.17.060. 04-14-028, § 296-806-46508, filed 6/29/04, effective 1/1/05.]

WAC 296-806-46510 Follow these requirements for safe distance training for press brakes.

You must:

(1) Train your employees in the safe distance safeguarding program and include **all** of the following:

• The need for safety awareness between the power press brake operator and, when required, the helper.

• The purpose and function of operating controls, operating mode controls, die space height adjustment positions, and other brake controls.

• The hazards of placing any parts of the body into the point of operation.

• The hazards related to each specific work piece bending operation.

• The purpose and function of hand-feeding tools.

• The dangers of unsafe work practices, inattention, horseplay, and misuse of equipment.

• The importance of reporting unsafe conditions immediately to the supervisor.

(2) Make sure employees are proficient in safe distance safeguarding after training, and follow both:

• Safe-operating instructions and recommendations of power press brake manufacturers;

AND

• Industry-recognized safe working practices for power press brakes.

[Statutory Authority: RCW 49.17.010, 49.17.040, 49.17.050, and 49.17.060. 04-14-028, § 296-806-46510, filed 6/29/04, effective 1/1/05.]

WAC 296-806-46512 Require safe distance retraining for press brake operations.

You must:

(1) Require safe distance retraining when employees either:

• Are seen operating the power press brake in an unsafe manner;

OR

• Fail to use safe distance procedures.

(2) Require safe distance retraining when conditions in the workplace change that can affect safe operation of the power press brakes, such as introducing new or revised control methods and procedures.

[Statutory Authority: RCW 49.17.010, 49.17.040, 49.17.050, and 49.17.060. 04-14-028, § 296-806-46512, filed 6/29/04, effective 1/1/05.]

WAC 296-806-46514 Conduct periodic safe distance inspections on press brakes.

You must:

(1) Conduct periodic inspections of safe distance procedures at least annually to make sure that established procedures are being followed.

(2) Make sure inspections are performed by a trained person who is **not** the person using the safe distance procedure.

(3) You must identify **all** of the following during safe distance procedure inspections:

• The date of the inspection.

• The person performing the inspection.

• The power press brake for which you are using the procedures.

• Any deviations or inadequacies with procedures and requirements.

• Joint reviews with each trained employee about their responsibilities under the safe distance program.

[Statutory Authority: RCW 49.17.010, 49.17.040, 49.17.050, and 49.17.060. 04-14-028, § 296-806-46514, filed 6/29/04, effective 1/1/05.]

WAC 296-806-46516 Supervise the safe distance program for press brakes.

You must:

• Provide adequate supervision to make sure that:

– Only trained employees operate power press brakes.

– Employees use work practices learned in your training program.

– Periodic safe distance inspections are conducted as outlined in, Conduct periodic safe distance inspections on press brakes, WAC 296-806-46514.

– Any deviations from, or inadequacies in, program procedures or work practices are promptly corrected.

– Designated safeguarding means are used, installed, and functioning properly.

– Recommended hand-feeding tools are used, when needed.

– To require retraining and other appropriate corrective action when necessary.

[Statutory Authority: RCW 49.17.010, 49.17.040, 49.17.050, and 49.17.060. 04-14-028, § 296-806-46516, filed 6/29/04, effective 1/1/05.]

ROLL-FORMING AND BENDING MACHINES

WAC 296-806-470 Summary. In addition to the requirements in this section, you need to refer to the following sections of this chapter in order to fully protect your employees from machine hazards:

• Requirements for all machines, WAC 296-806-200 and 296-806-300.

This section applies to power driven roll-forming and bending machines that change the shape or the direction of materials by using rolls, rotary forming dies, and associated tooling.

Your responsibility:

To protect employees from hazards associated with roll-forming and bending machines.

You must:

Follow these requirements for machine initiation

WAC 296-806-47002.

Safeguard nip points on roll-forming and bending machines

WAC 296-806-47004.

[Statutory Authority: RCW 49.17.010, 49.17.040, 49.17.050, and 49.17.060. 04-14-028, § 296-806-470, filed 6/29/04, effective 1/1/05.]

WAC 296-806-47002 Follow these requirements for machine initiation.

You must:

• Make sure all of the following occur before starting machines:

– Select "normal" operation mode.

– Safeguards are in place and functioning.

– No workers are within the hazard zones.

– Other proper work practices are followed.

• Make sure in the "jog mode," the machine function is initiated by the operator either:

– During set-up;

OR

– By threading the material through the forming rolls.

• Make sure only assigned test employees perform machine testing and start-up.

[Statutory Authority: RCW 49.17.010, 49.17.040, 49.17.050, and 49.17.060. 04-14-028, § 296-806-47002, filed 6/29/04, effective 1/1/05.]

WAC 296-806-47004 Safeguard nip points of roll-forming and bending machines.

You must:

• Safeguard in-running nip points on roll-forming and bending machines with **at least one** of the following:

– A point-of-operation guard or device.

– An emergency stop device.

■ An emergency stop device must be used when a point-of-operation guard or device is not feasible.

[Statutory Authority: RCW 49.17.010, 49.17.040, 49.17.050, and 49.17.060. 04-14-028, § 296-806-47004, filed 6/29/04, effective 1/1/05.]

SANDING MACHINES

WAC 296-806-475 Summary. In addition to the requirements in this section, you need to refer to the following sections of this chapter in order to fully protect your employees from machine hazards:

• Requirements for all machines, WAC 296-806-200 and 296-806-300.

This section applies to sanding machines that remove material from stock with an abrasive sanding surface such as a belt, disk, or drum.

Exemption: This section does not apply to hand-held sanders. See, Portable power tools, chapter 296-807 WAC, for requirements that apply to hand-held tools.

Reference:
- If you have multiple specific machines and operations in your workplace, you need to follow all requirements in WAC 296-806-400 that apply.
  - For example, if you use sanding machines and saws and cutting heads, you need to refer to both of these sections.
- In addition to the requirements in this section, you need to refer to the following sections of this chapter in order to fully protect your employees from machine hazards:
  - WAC 296-806-200, Requirements for all machines.
  - WAC 296-806-300, Requirements for machine parts.
- See chapter 296-807 WAC, Portable power tools, for requirements that apply to hand-held sanders.

Your responsibility:

To protect employees from hazards associated with drum, disk, and belt sanders.

You must:

Guard drum sanders

WAC 296-806-47502.

Guard disk sanders

WAC 296-806-47504.

Guard belt sanders

WAC 296-806-47506.

Follow these requirements for feed roll guarding

WAC 296-806-47508.

[Statutory Authority: RCW 49.17.010, 49.17.040, 49.17.050, and 49.17.060. 04-14-028, § 296-806-475, filed 6/29/04, effective 1/1/05.]

WAC 296-806-47502 Guard drum sanders.

You must:

• Make sure drum sanders have one of the following to enclose that part of the drum not used to work on the material:

– Guard.

– Exhaust hood.

Reference: Exhaust hoods are required on sanders when dust levels exceed exposure limits. For requirements about air contaminants, see Respiratory hazards, chapter 296-841 WAC.

Exemption: When a table is used for the application of material to be finished, you do not need to enclose the portion of the drum above the table that is necessary to do the work.

[Statutory Authority: RCW 49.17.010, 49.17.040, 49.17.050, and 49.17.060. 04-14-028, § 296-806-47502, filed 6/29/04, effective 1/1/05.]

WAC 296-806-47504 Guard disk sanders.

You must:

• Make sure disk sanders have an exhaust hood, when required, or a guard that encloses the part of the disk not used to work on the material.

Exemption: When a table is used for the application of material to be finished, you do not need to enclose the portion of the disk above the table that is necessary to do the work.

[Statutory Authority: RCW 49.17.010, 49.17.040, 49.17.050, and 49.17.060. 04-14-028, § 296-806-47504, filed 6/29/04, effective 1/1/05.]

WAC 296-806-47506 Guard belt sanders.

You must:

• Protect the operator by guarding:

– Nip points where the sanding belt runs on the pulleys.

– The unused run of the sanding belt.

[Statutory Authority: RCW 49.17.010, 49.17.040, 49.17.050, and 49.17.060. 04-14-028, § 296-806-47506, filed 6/29/04, effective 1/1/05.]

WAC 296-806-47508 Follow these requirements for feed roll guarding.

You must:

• Make sure that feed rolls have a hood or guard to prevent the operator's hands from coming in contact with the in-running rolls at any point.

• Make sure that the guard meets **ALL** of the following:

– Is constructed of heavy material, preferably metal.

– The bottom of the guard comes down to within three-eighths inch of the plane formed by the bottom or working surfaces of the feed rolls.

■ When the three-eighths inch distance is increased to three-quarter inch, the lead edge of the hood must be extended to five and one-half inches or more in front of the nip point between the front roll and the work.

[Statutory Authority: RCW 49.17.010, 49.17.040, 49.17.050, and 49.17.060. 04-14-028, § 296-806-47508, filed 6/29/04, effective 1/1/05.]

SAWS AND CUTTING HEADS

WAC 296-806-480 Summary. If your specific machine or operation is not listed here, then be sure to follow any of the following requirements that apply:

• General requirements for all saws and cutting heads in this section.

• General requirements for all saws in this section.

• General requirements for all cutting heads in this section.

• "Requirements for all machines" found in this chapter, WAC 296-806-200 and 296-806-300.

Reference: For requirements on hand-held tools, see Portable power tools, chapter 296-807 WAC.

This section applies to fixed machines using saws or cutting heads that are used on any material.

Your responsibility:

To make sure machines using saws and cutting heads meet these requirements.

You must:

GENERAL REQUIREMENTS FOR ALL SAWS AND CUTTING HEADS

Protect employees using saws and cutting heads

WAC 296-806-48002.

Make sure saws and cutting heads are sharpened and tensioned by qualified people

WAC 296-806-48004.

SAWS

General Requirements for All Saws

Make sure saws are safe to use

WAC 296-806-48006.

Requirements for All Circular Saws

Make sure all circular saws meet these requirements

WAC 296-806-48008.

Make sure circular saw gages meet these requirements

WAC 296-806-48010.

Guard hand-fed circular table saws

WAC 296-806-48012.

Provide kickback protection for employees using hand-fed circular table ripsaws when ripping wood

WAC 296-806-48014.

Safeguard self-feed circular saws

WAC 296-806-48016.

Provide kickback protection for self-feed circular ripsaws when ripping wood

WAC 296-806-48018.

Guard circular resaws

WAC 296-806-48020.

Provide spreaders for circular resaws

WAC 296-806-48022.

Requirements for Specific Circular Saws

Protect employees from automatic saw hazards

WAC 296-806-48024.

Guard inverted swing (jump) saws

WAC 296-806-48026.

Guard miter saws

WAC 296-806-48028.

Guard radial saws

WAC 296-806-48030.

Limit the travel of radial saws

WAC 296-806-48032.

Provide kickback protection for radial saws used for ripping wood

WAC 296-806-48034.

Guard revolving double arbor saws

WAC 296-806-48036.

Guard swing saws

WAC 296-806-48038.

Limit the travel of swing saws

WAC 296-806-48040.

Requirements for Band Saws and Drag Saws

Make sure bandsaws meet these requirements

WAC 296-806-48042.

Protect employees from drag saw hazards

WAC 296-806-48044.

CUTTING HEADS

General Requirements for All Cutting Heads

Maintain and balance knives and cutting heads

WAC 296-806-48046.

BORING AND MORTISING MACHINES

Make sure boring and mortising machines meet these requirements

WAC 296-806-48048.

CHIPPER AND HOG MILLS

Follow these requirements for chipper mills

WAC 296-806-48050.

Follow these requirements for hog mills

WAC 296-806-48052.

Protect employees from falling into chipper and hog mills

WAC 296-806-48054.

JOINTERS

Make sure jointers with horizontal cutting heads meet these requirements

WAC 296-806-48056.

Guard horizontal cutting heads on hand-fed jointers

WAC 296-806-48058.

Guard vertical cutting heads on jointers

WAC 296-806-48060.

MOLDING, STICKING AND MATCHING MACHINES

Make sure molding, sticking and matching machines meet these requirements

WAC 296-806-48062.

PANEL RAISERS AND OTHER SIMILAR MACHINES

Guard hand-fed panel raisers and other similar machines

WAC 296-806-48064.

PLANERS

Make sure planers with a horizontal cutting head meet these requirements

WAC 296-806-48066.

Guard planers

WAC 296-806-48068.

Guard planer feed rolls

WAC 296-806-48070.

Provide kickback protection on planers running stock of varied thicknesses

WAC 296-806-48072.

SHAPERS

Make sure shapers meet these requirements

WAC 296-806-48074.

TENONING MACHINES

Guard tenoning machines feed chains and sprockets

WAC 296-806-48076.

Guard tenoning machines

WAC 296-806-48078.

VENEER MACHINERY

Guard veneer cutters and wringer knives

WAC 296-806-48080.

Guard veneer clippers

WAC 296-806-48082.

Follow these requirements for guarding guillotine cutters

WAC 296-806-48084.

Provide mechanisms to stop power-driven guillotine cutters

WAC 296-806-48086.

Prohibit riders on veneer slicer carriages

WAC 296-806-48088.

[Statutory Authority: RCW 49.17.010, 49.17.040, 49.17.050, and 49.17.060. 04-14-028, § 296-806-480, filed 6/29/04, effective 1/1/05.]

GENERAL REQUIREMENTS FOR ALL SAWS AND CUTTING HEADS

WAC 296-806-48002 Protect employees using saws and cutting heads.

You must:

• Provide safeguarding to protect employees from the hazards of feed rolls.

• Provide types and sizes of push sticks or push blocks that are suitable for the work being done.

• Use a comb (featherboard) or a suitable jig to protect employees when a standard guard cannot be used.

Note: Operations where you may need a comb or jig include:
• Dadoing.
• Grooving.
• Jointing.
• Moulding.
• Rabbeting.

[Statutory Authority: RCW 49.17.010, 49.17.040, 49.17.050, and 49.17.060. 04-14-028, § 296-806-48002, filed 6/29/04, effective 1/1/05.]

WAC 296-806-48004 Make sure saws and cutting heads are sharpened and tensioned by qualified people.

You must:

• Make sure people who sharpen or tension saw blades or cutters have demonstrated skill in this area.

[Statutory Authority: RCW 49.17.010, 49.17.040, 49.17.050, and 49.17.060. 04-14-028, § 296-806-48004, filed 6/29/04, effective 1/1/05.]

SAWS

General Requirements for All Saws

WAC 296-806-48006 Make sure saws are safe to use.

You must:

• Immediately remove from service a saw that has **any of the following** problems:

– Cracked.

– Dull.

– Badly set.

– Improperly filed.

– Improperly tensioned.

• Immediately clean any saw where gum has begun to stick on the sides.

• Eliminate unintended fence and table movement during operation.

• Keep hinged tables and fences firmly secured and in true alignment for all positions.

[Statutory Authority: RCW 49.17.010, 49.17.040, 49.17.050, and 49.17.060. 04-14-028, § 296-806-48006, filed 6/29/04, effective 1/1/05.]

Requirements for All Circular Saws

WAC 296-806-48008 Make sure all circular saws meet these requirements.

You must:

• Protect employees from contacting the portion of the saw beneath or behind the table by covering it with either:

– An exhaust hood, if one is required;

OR

– A guard.

• Prohibit workers from inserting wedges between the saw disk and the collar to form a wobble saw.

[Statutory Authority: RCW 49.17.010, 49.17.040, 49.17.050, and 49.17.060. 04-14-028, § 296-806-48008, filed 6/29/04, effective 1/1/05.]

WAC 296-806-48010 Make sure circular saw gages meet these requirements.

You must:

• Make sure circular saw gages slide in grooves or tracks that are accurately machined to maintain exact alignment with the saw for all positions of the guide.

Note: Circular saw gages are also referred to as miter or positioning gages.

[Statutory Authority: RCW 49.17.010, 49.17.040, 49.17.050, and 49.17.060. 04-14-028, § 296-806-48010, filed 6/29/04, effective 1/1/05.]

WAC 296-806-48012 Safeguard hand-fed circular table saws.

You must:

• Guard each hand-fed circular saw with a hood that completely encloses both the portion of the saw that is above both:

– The table;

AND

– The material being cut.

• Make sure the hood is designed and constructed to do **all** of the following:

– Protect the operator from flying splinters and broken saw teeth.

– Strong enough to resist damage from reasonable operation, adjustments, and handling.

– Made of material soft enough to not break saw teeth.

Note: Hoods should be made of material that:
• Does not shatter when broken.
• Is not explosive.
• Is less combustible than wood.

You must:

• Mount the hood so it does **all** of the following:

– Operates positively and reliably.

– Maintains true alignment with the saw.

– Resists any side thrust or force that could throw it out of line.

• Make sure the hood:

– Allows the material to be inserted or sawed without any considerable resistance;

AND

– Does one of the following:

■ Automatically remains in contact with the material being cut;

OR

■ Is manually adjusted to within one-quarter inch of the material being cut.

Exemption: Saws may be guarded with a fixed enclosure, fixed barrier guard, or a manually adjusted guard when specific conditions prevent using a standard automatic adjusting guard. Alternative guards have to both:
• Provide protection equivalent to a standard automatic adjusting guard;
AND
• Be used according to the manufacturer's instructions with sufficient supervision to comply with this requirement.

[Statutory Authority: RCW 49.17.010, 49.17.040, 49.17.050, and 49.17.060. 04-14-028, § 296-806-48012, filed 6/29/04, effective 1/1/05.]

WAC 296-806-48014 Provide kickback protection for employees using hand-fed circular table ripsaws when ripping wood products.

Definition:

Ripping is a sawing operation made:

• Through the thickness of the work piece with the grain of natural wood;

• Along the long dimension of a rectangular work piece;

AND

• Usually parallel to that edge on reconstituted wood products.

This can also be described as cutting stock to width. Two or more pieces result from the operation.

You must:

• Provide a spreader or riving knife that is:

– Made of hard-tempered steel or its equivalent.

– Thinner than the saw kerf.

– Wide enough to provide sufficient stiffness and rigidity to resist any reasonable side thrust or blow that could bend or throw it out of position.

– Attached so it remains in true alignment with the saw when the saw or table is tilted.

Note: • The spreader or riving knife should:
– Prevent material from either squeezing the saw or being thrown back at the operator.
– Be placed so there is one-half inch or less space between it and the back of the saw when the largest saw is mounted in the machine.

Exemption: You do not have to provide a spreader or riving knife when grooving, dadoing, or rabbeting. When you finish these operations, replace the spreader immediately.

You must:

• Provide nonkickback fingers or dogs that are:

– Located so they prevent the saw from either picking up the material or throwing the material back towards the operator.

– Designed to hold any thickness of material being cut.

Note: Kickbacks occur when a saw seizes the stock and hurls it back at the operator. This can happen when the stock twists and binds against the side of the blades or is caught in the teeth. Kickbacks occur more often when cutting parallel to the wood grain (ripping) than when cross cutting. Common contributors to kickbacks include:
• A blade that is not sharpened.
• A blade set at an incorrect height.
• Poor quality lumber, such as frozen lumber, lumber with many knots, or foreign objects, such as nails.

[Statutory Authority: RCW 49.17.010, 49.17.040, 49.17.050, and 49.17.060. 04-14-028, § 296-806-48014, filed 6/29/04, effective 1/1/05.]

WAC 296-806-48016 Safeguard self-feed circular saws.

You must:

• Provide saws and feed rolls with a hood or guard to protect the operator from contacting the in-running rolls.

• Make sure the guard is constructed of heavy material, preferably metal.

• Make sure the distance between the bottom of the guard and the plane formed by the bottom or working surface of the feed rolls meets the requirements of Table 200-1, Largest Allowable Guard Opening, in WAC 296-806-20042.

[Statutory Authority: RCW 49.17.010, 49.17.040, 49.17.050, and 49.17.060. 04-14-028, § 296-806-48016, filed 6/29/04, effective 1/1/05.]

WAC 296-806-48018 Provide kickback protection for self-feed circular ripsaws when ripping wood products.

You must:

• Provide saws with sectional nonkickback fingers that meet **all** of the following requirements:

– They cover the full width of the feed roll.

– They are located in front of the saw.

– They are arranged so they keep continuous contact with the material being fed.

[Statutory Authority: RCW 49.17.010, 49.17.040, 49.17.050, and 49.17.060. 04-14-028, § 296-806-48018, filed 6/29/04, effective 1/1/05.]

WAC 296-806-48020 Guard circular resaws.

You must:

• Provide each circular resaw with a metal hood or shield that is:

– Located above the saw.

– Designed to protect the operator from flying splinters or broken saw teeth.

[Statutory Authority: RCW 49.17.010, 49.17.040, 49.17.050, and 49.17.060. 04-14-028, § 296-806-48020, filed 6/29/04, effective 1/1/05.]

WAC 296-806-48022 Provide spreaders for circular resaws.

Exemption: This requirement does not apply to self-feed saws with a roller or wheel at the back of the saw.

You must:

• Provide a spreader that is **all** of the following:

– Securely fastened behind the saw.

– Slightly thinner than the saw kerf.

– Slightly thicker than the saw disk.

[Statutory Authority: RCW 49.17.010, 49.17.040, 49.17.050, and 49.17.060. 04-14-028, § 296-806-48022, filed 6/29/04, effective 1/1/05.]

Requirements for Specific Circular Saws

WAC 296-806-48024 Protect employees from automatic saw hazards.

You must:

• Make sure automatic saws that stroke continuously without the operator controlling each stroke are **not** used where employees could be exposed to:

– Saw hazards during operations such as loading, clamping, cutting, or unloading.

[Statutory Authority: RCW 49.17.010, 49.17.040, 49.17.050, and 49.17.060. 04-14-028, § 296-806-48024, filed 6/29/04, effective 1/1/05.]

WAC 296-806-48026 Guard inverted swing (jump) saws.

You must:

(1) Guard jump saws with a hood that both:

• Covers the part of the saw that is exposed above the top of the table or above the material being cut;

AND

• Automatically adjusts to the thickness of the material being cut and remains in contact with it.

(2) Provide a holding device that will prevent stock from moving while cutting materials.

(3) Provide warning signs, stickers, or placards when the pinching hazard created by the holding device cannot be eliminated by design.

(4) Provide the following for automatically fed jump saws.

• Place guards over the roller conveyor to prevent persons from walking into or over the saw.

• Enclose jump saws when below the table or roller conveyor and not in actual use.

• Install a positive stop to prevent the saw from passing the front edge of the roller conveyor or table.

• Make sure the throat in the table or roller conveyor is only wide enough to permit unobstructed operation of the saw.

[Statutory Authority: RCW 49.17.010, 49.17.040, 49.17.050, and 49.17.060. 04-14-028, § 296-806-48026, filed 6/29/04, effective 1/1/05.]

WAC 296-806-48028 Guard miter saws.

IMPORTANT:

Miter saws include:

• Miter.

• Compound miter.

• Slide miter.

• Compound slide miter.

You must:

(1) Guard miter saws with an upper hood that completely encloses the upper half of the blade.

(2) Provide a method to protect employees from contacting the blade underneath the table while in its recommended carrying position.

(3) Guard the lower blade:

• By making sure the teeth are guarded at least three-quarters of an inch beyond the root of the teeth, toward the center of the blade, except for a maximum forty-five degree exposure of quadrant C when in the full retract position. See Illustration 480-1, Miter Saw Guarding.

• With a retractable guard that cannot be locked in any position.

Illustration 480-1
Miter Saw Guarding

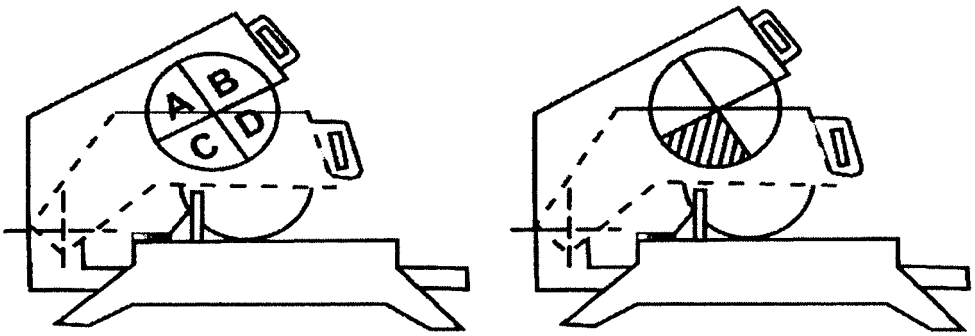

This illustration shows miter saws in full retract position, and quadrant C, where 45 degrees, or half of quadrant C may be exposed when in the full retract position.

[Statutory Authority: RCW 49.17.010, 49.17.040, 49.17.050, and 49.17.060. 04-14-028, § 296-806-48028, filed 6/29/04, effective 1/1/05.]

WAC 296-806-48030 Guard radial saws.

You must:

• Make sure the radial saw has a hood that does **all** of the following:

– Completely encloses the upper portion of the blade down to a point that includes the end of the saw arbor.

– Protects the operator from flying splinters and broken saw teeth.

– Deflects sawdust away from the operator.

• Provide a lower blade guard that does **all** of the following (see Guard radial saws, illustration 480-2):

– Guards the sides of the lower exposed portion of the blade to its full diameter.

– Automatically adjusts to the thickness of the stock being cut.

– Remains in contact with the stock to provide the maximum protection possible for the operation being performed;

OR

– Is manually adjusted (wing) guard that:

■ Is made of material strong enough to withstand the forces put on it.

■ Suggested materials include polycarbonates or expanded metal.

■ Has edges that are smooth so no hazards from the guard exist.

■ Extends a minimum of eight inches to both the front and arbor-end sides.

■ Is adjustable in a vertical plane to the different thicknesses of stock so the gap is three-eighths inch or less between the bottom of the guard and the top of the stock.

Exemption: Saws may be guarded with a fixed enclosure, fixed barrier guard, or a manually adjusted guard when specific conditions prevent using a standard, automatic adjusting guard. Alternative guards have to both:

- Provide protection equivalent to a standard automatic adjusting guard;

AND

- Be used according to the manufacturer's instructions with sufficient supervision to meet this requirement.

Illustration 480-2 Guard radial saws

A manually adjusted awareness barrier guard that extends 8 inches to the front and sides of the blade

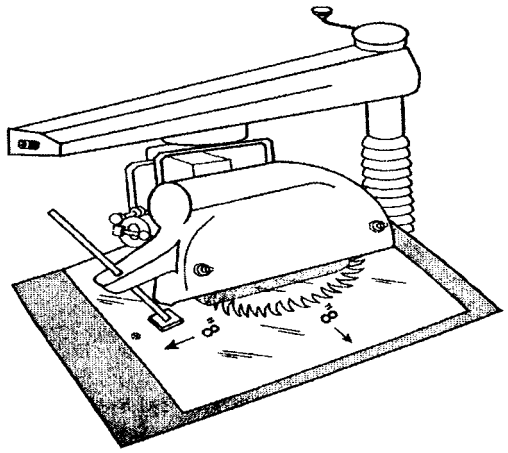

[Statutory Authority: RCW 49.17.010, 49.17.040, 49.17.050, and 49.17.060. 04-14-028, § 296-806-48030, filed 6/29/04, effective 1/1/05.]

WAC 296-806-48032 Limit the travel of radial saws.

You must:

• Provide an adjustable stop that prevents:

– Forward travel of the blade beyond the position necessary to complete the cut;

AND

– Any part of the saw blade from extending beyond the front edge of the work support table.

• Install the saw so that the front end is slightly higher than the rear in order to cause the cutting head to return to the starting position when released by the operator.

• Make sure the cutting head or carriage does **all** of the following:

– Returns gently to the rest or starting position when released by the operator.

– Does not bounce or recoil when reaching the rest or starting position.

– Remains in the rest or starting position.

[Statutory Authority: RCW 49.17.010, 49.17.040, 49.17.050, and 49.17.060. 04-14-028, § 296-806-48032, filed 6/29/04, effective 1/1/05.]

WAC 296-806-48034 Provide kickback protection for radial saws used for ripping wood products.

You must:

• Provide nonkickback fingers or dogs that are both:

– Located on both sides of the saw to resist the tendency of the saw to pick up material or throw it back toward the operator;

AND

– Designed to hold any thickness of material being cut.

• Make sure when ripping or ploughing that you feed the material from the end where the blade teeth enter the upper guard, which is against the direction in which the saw turns. See, Ripping with a radial arm saw, illustration 480-3.

• Make sure the direction of saw rotation is clearly marked on the hood.

• Fasten a permanent label at the rear of the guard hood, at about the level of the arbor, where the blade teeth exit the upper hood during saw operation that:

– Reads, **"DANGER: DO NOT RIP OR PLOUGH FROM THIS END."**

– Is colored standard danger red.

– Is not less than one and one-half inches by three-quarters inch with standard proportional lettering.

RIPPING WITH A RADIAL ARM SAW

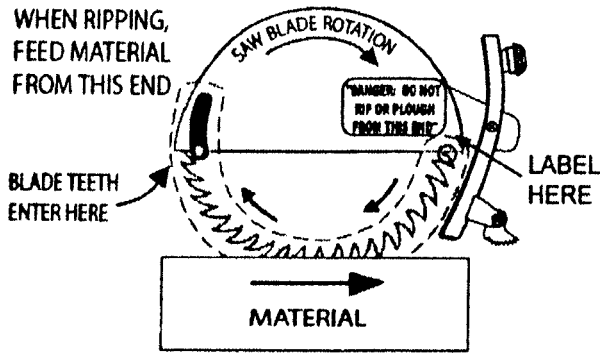

RIPPING

Illustration 480-3

Important requirements for ripping with a radial arm saw.

[Statutory Authority: RCW 49.17.010, 49.17.040, 49.17.050, and 49.17.060. 04-14-028, § 296-806-48034, filed 6/29/04, effective 1/1/05.]

WAC 296-806-48036 Guard revolving double arbor saws.

You must:

• Guard each revolving double arbor saw with a hood that completely encloses the portion of the saw that is above both:

– The table;

AND

– The material being cut.

Note: Hoods should be made of material that:
• Does not shatter when broken.
• Is not explosive.
• Is less combustible than wood.

[Statutory Authority: RCW 49.17.010, 49.17.040, 49.17.050, and 49.17.060. 04-14-028, § 296-806-48036, filed 6/29/04, effective 1/1/05.]

WAC 296-806-48038 Guard swing saws.

IMPORTANT:

This section applies to swing saws mounted above the table.

You must:

• Provide saws with a hood that encloses **all** of the following:

– Upper half of the saw.

– Arbor end.

– Point of operation in all positions of the saw.

• Make sure the hood protects operators from flying splinters and broken saw teeth.

• Make sure the lower blade guard will automatically cover the lower portion of the blade by dropping on top of and remaining in contact with the table or the material being cut.

Exemption: Saws may be guarded with a fixed enclosure, fixed barrier guard, or a manually adjusted guard when specific conditions prevent using a standard, automatic adjusting guard. Alternative guards have to:
• Provide protection equivalent to a standard automatic adjusting guard;

AND

• Be used according to the manufacturer's instructions with sufficient supervision to meet this requirement.

[Statutory Authority: RCW 49.17.010, 49.17.040, 49.17.050, and 49.17.060. 04-14-028, § 296-806-48038, filed 6/29/04, effective 1/1/05.]

WAC 296-806-48040 Limit the travel of swing saws.

IMPORTANT:

This section applies to swing saws that are mounted above the table.

You must:

• Provide saws with a device that:

– Automatically returns the saw to the back of the table when the saw is released at any point in its travel.

– Does not depend on a rope, cord, or spring to function properly.

• Make sure devices that use a counterweight meets these requirements:

– The bolts supporting the bar and the counterweight use cotter pins.

– The counterweight is prevented from dropping by **one** of these methods:

■ A bolt passing through both the bar and the counterweight.

■ A bolt through the extreme end of the bar.

■ A safety chain to hold it to the bar if the counterweight does not completely encircle the bar.

• Provide limit chains or another equally effective device to prevent the saw from swinging either:

– Beyond the front or back edge of the table;

OR

– Forward to a position where the gullets of the lowest saw teeth will rise above the table top.

[Statutory Authority: RCW 49.17.010, 49.17.040, 49.17.050, and 49.17.060. 04-14-028, § 296-806-48040, filed 6/29/04, effective 1/1/05.]

Requirements for Band Saws and Drag Saws

WAC 296-806-48042 Make sure band saws meet these requirements.

You must:

• Enclose or guard all portions of the blade except for the working portion of the blade between the guide rolls and the table.

• Make sure the guard for the portion of the blade between the sliding guide and the wheel guard meets these requirements:

– Protects the front and outer side of the blade.

– Is self-adjusting to move with the guide.

– Adjusts so the gap between the guide rolls and stock is as small as is practical.

• Fully enclose band saw wheels with wheel guards that meet **both** of the following requirements:

– The outside periphery of the wheel enclosure is solid;

AND

– The front and back of the wheels are enclosed by solid material, wire mesh, or perforated metal.

• Make sure the material used for wheel guards meets these requirements:

– Wire mesh and perforated metal guards:

■ Are at least 0.037 inch (U.S. Gage No. 20) thick.

■ Have openings in them that are three-eighths inch or less.

– Solid material has strength and firmness equivalent to a wire mesh or perforated steel guard.

• Make sure band saws have a tension control device to indicate the proper tension for standard saws used on the machine.

[Statutory Authority: RCW 49.17.010, 49.17.040, 49.17.050, and 49.17.060. 04-14-028, § 296-806-48042, filed 6/29/04, effective 1/1/05.]

WAC 296-806-48044 Protect employees from drag saw hazards.

You must:

• Protect employees passing near a drag saw by either:

– Providing a four-foot clearance when the saw is at the extreme end of the stroke;

OR

– Enclosing the saw and its driving mechanism, if you cannot provide a four-foot clearance.

[Statutory Authority: RCW 49.17.010, 49.17.040, 49.17.050, and 49.17.060. 04-14-028, § 296-806-48044, filed 6/29/04, effective 1/1/05.]

CUTTING HEADS
General Requirements for All Cutting Heads

WAC 296-806-48046 Maintain and balance knives and cutting heads.

You must:

• Make sure knives and cutting heads are kept:

– Sharp.

– Properly adjusted.

– Firmly secured.

• Make sure knives are properly balanced when two or more are used in one cutting head.

[Statutory Authority: RCW 49.17.010, 49.17.040, 49.17.050, and 49.17.060. 04-14-028, § 296-806-48046, filed 6/29/04, effective 1/1/05.]

BORING AND MORTISING MACHINES

WAC 296-806-48048 Make sure boring and mortising machines meet these requirements.

Exemption: This section does not apply to drill presses, boring machines, or mortising machines if both of the following apply:

- The downward stroke of the chuck and bit is controlled manually by the operator;

AND

- The chuck and bit automatically rises to the start position when control is released.

You must:

• Completely enclose universal joints on spindles of boring machines to prevent accidental contact by the operator.

• Make sure you do not use safety bit chucks that have projecting set screws.

• Enclose the top of the cutting chain and driving mechanism.

• Prevent a counterweight, when used, from dropping by one of the following, or an equivalent method:

– Securing it to a bar by one of the following:

■ A bolt passing through both the bar and the counterweight.

■ A bolt through the extreme end of the bar.

■ A safety chain to hold it to the bar if the counterweight does not completely encircle the bar;

OR

– Suspending it by a chain or wire rope and having it travel in a pipe or other suitable enclosure if it could fall and injure an employee.

Note: Boring bits should be provided with a guard that will enclose all portions of the bit and chuck above the material being worked.

[Statutory Authority: RCW 49.17.010, 49.17.040, 49.17.050, and 49.17.060. 04-14-028, § 296-806-48048, filed 6/29/04, effective 1/1/05.]

CHIPPER AND HOG MILLS

WAC 296-806-48050 Follow these requirements for chipper mills.

Exemption: This section does not apply to mobile chippers.

Reference: Safety requirements for mobile chippers can be found in, Pruning, Repairing, Maintaining and Removing Trees and Cutting Brush, section 9.6, ANSI Z133.1-2000.

You must:

(1) Arrange the feed system so the operator does not stand in direct line with the chipper blades or spout (hopper).

(2) Protect the operator from chips or chunks being thrown out while feeding the machine.

(3) Enclose the chipper spout to a height or distance of at least forty inches from the floor or the operator's station, whichever is higher.

(4) Provide a mirror or other device to allow monitoring of material when the operator cannot readily observe the material being fed into the chipper.

[Statutory Authority: RCW 49.17.010, 49.17.040, 49.17.050, and 49.17.060. 04-14-028, § 296-806-48050, filed 6/29/04, effective 1/1/05.]

WAC 296-806-48052 Follow these requirements for hog mills.

You must:

(1) Make sure that feed chutes are at least forty inches from the knives or feed roll.

(2) Provide baffles or other suitable safeguards to prevent material from being thrown from the hog mill.

[Statutory Authority: RCW 49.17.010, 49.17.040, 49.17.050, and 49.17.060. 04-14-028, § 296-806-48052, filed 6/29/04, effective 1/1/05.]

WAC 296-806-48054 Protect employees from falling into chipper and hog mills.

You must:

• Protect employees working near the feed openings of chipper and hog mills from falling into the openings by providing **at least one** of the following:

– A safety belt (or harness) and a lifeline short enough to prevent workers from falling into the mill.

– Barriers or other types of protective guarding.

Reference: See, Railing, toeboards and cover specifications for requirements on guardrails used as barriers, WAC 296-24-75011.

[Statutory Authority: RCW 49.17.010, 49.17.040, 49.17.050, and 49.17.060. 04-14-028, § 296-806-48054, filed 6/29/04, effective 1/1/05.]

JOINTERS

WAC 296-806-48056 Make sure jointers with horizontal cutting heads meet these requirements.

You must:

• Make sure the cutting head on hand-fed jointers is cylindrical:

– Install and adjust the knife blade so it does not protrude more than one-eighth inch beyond the body of the head.

• Make sure the opening in the table meets **all** of the following:

– Is kept as small as possible.

– The clearance between the edge of the rear table and the cutting head is not more than one-eighth inch.

– The table throat opening is not more than two and one-half inches when the tables are set or aligned with each other for zero cut.

[Statutory Authority: RCW 49.17.010, 49.17.040, 49.17.050, and 49.17.060. 04-14-028, § 296-806-48056, filed 6/29/04, effective 1/1/05.]

WAC 296-806-48058 Guard horizontal cutting heads on hand-fed jointers.

You must:

• Provide jointers with an automatic guard on the working side of the fence or gage that does **all** of the following:

– Covers all sections of the head.

– Effectively keeps the operator's hand from contacting the revolving knives.

– Automatically adjusts to cover the unused portion of the head.

– Remains in contact with the material at all times.

• Provide jointers with a guard that covers the section of the head behind the gage or fence.

[Statutory Authority: RCW 49.17.010, 49.17.040, 49.17.050, and 49.17.060. 04-14-028, § 296-806-48058, filed 6/29/04, effective 1/1/05.]

WAC 296-806-48060 Guard vertical cutting heads on jointers.

You must:

• Provide each jointer that has a vertical cutting head with an exhaust hood or other type of guard that completely encloses the revolving head except for a slot that is wide enough for the material being jointed.

[Statutory Authority: RCW 49.17.010, 49.17.040, 49.17.050, and 49.17.060. 04-14-028, § 296-806-48060, filed 6/29/04, effective 1/1/05.]

MOLDING, STICKING AND MATCHING MACHINES

WAC 296-806-48062 Make sure molding, sticking and matching machines meet these requirements.

You must:

• Make sure all cutting heads, and saws if used, are covered by a guard that:

– Is metal.

– Forms all or part of the exhaust hood if an exhaust system is used.

• Make sure a guard constructed from:

– Sheet metal is at least one-sixteenth inch thick.

– Cast iron is at least three-sixteenths inch thick.

• Make sure feed rolls are guarded by a hood or other suitable guard that both:

– Prevents the operator's hand from contacting the in-running rolls at any point;

AND

– Is attached to the frame carrying the rolls so it adjusts for any thickness of stock.

[Statutory Authority: RCW 49.17.010, 49.17.040, 49.17.050, and 49.17.060. 04-14-028, § 296-806-48062, filed 6/29/04, effective 1/1/05.]

PANEL RAISERS AND OTHER SIMILAR MACHINES

WAC 296-806-48064 Guard hand-fed panel raisers and other similar machines.

You must:

• Guard the cutting heads of hand-fed panel raisers and other similar machines by enclosing the cutting head with either:

– A fixed guard such as a cage;

OR

– An adjustable guard designed to keep the operator's hand away from the cutting edge.

[Statutory Authority: RCW 49.17.010, 49.17.040, 49.17.050, and 49.17.060. 04-14-028, § 296-806-48064, filed 6/29/04, effective 1/1/05.]

PLANERS

WAC 296-806-48066 Make sure planers with a horizontal cutting head meet these requirements.

You must:

• Make sure the cutting head on hand-fed planers is cylindrical.

– Install and adjust the knife blade so it does not extend more than one-eighth inch beyond the body of the head.

[Statutory Authority: RCW 49.17.010, 49.17.040, 49.17.050, and 49.17.060. 04-14-028, § 296-806-48066, filed 6/29/04, effective 1/1/05.]

WAC 296-806-48068 Guard planers.

You must:

• Make sure all cutting heads, and saws if used, are covered by a guard that:

– Is metal.

– Forms all or part of the exhaust hood if an exhaust system is used.

• Make sure a guard constructed from:

– Sheet metal is at least one-sixteenth inch thick.

– Cast iron is at least three-sixteenths inch thick.

[Statutory Authority: RCW 49.17.010, 49.17.040, 49.17.050, and 49.17.060. 04-14-028, § 296-806-48068, filed 6/29/04, effective 1/1/05.]

WAC 296-806-48070 Guard planer feed rolls.

You must:

• Make sure feed rolls are guarded by a hood or other suitable guard that:

– Prevents the operator's hand from contacting the in-running rolls at any point.

– Is attached to the frame carrying the rolls so it remains in adjustment for any thickness of stock.

[Statutory Authority: RCW 49.17.010, 49.17.040, 49.17.050, and 49.17.060. 04-14-028, § 296-806-48070, filed 6/29/04, effective 1/1/05.]

WAC 296-806-48072 Provide kickback protection on planers running stock of varied thicknesses.

You must:

• Provide kickback protection on planers running stock of varied thicknesses at the same time by providing either:

– Sectional feed rolls that provide feeding contact pressure on the stock;

OR

– Suitable nonkickback fingers at the infeed end of each section.

Note: The sectional feed rolls need to have sufficient yield in their construction to provide contact pressure on:
– Any thickness of stock the machine is capable of processing.

[Statutory Authority: RCW 49.17.010, 49.17.040, 49.17.050, and 49.17.060. 04-14-028, § 296-806-48072, filed 6/29/04, effective 1/1/05.]

SHAPERS

WAC 296-806-48074 Make sure shapers meet these requirements.

You must:

• Guard the cutting head of the shaper by enclosing it with either:

– A fixed guard, such as a cage;

OR

– An adjustable guard designed to keep the operator's hand away from the cutting edge.

• Make sure the diameter of a circular shaper guard is at least as large as the greatest diameter of the cutter.

Note: A warning device of leather or other material attached to the spindle is **NOT** an acceptable substitute for a guard.

You must:

• Guard all sections of the cutting tool except for an opening to allow access to the work piece by the cutting tool.

Note: A ring guard is one means of satisfying the guarding requirement for cutting tools when involved in free hand or template shaping.

You must:

• Make sure all double-spindle shapers have a spindle starting and stopping device for each spindle.

[Statutory Authority: RCW 49.17.010, 49.17.040, 49.17.050, and 49.17.060. 04-14-028, § 296-806-48074, filed 6/29/04, effective 1/1/05.]

TENONING MACHINES

WAC 296-806-48076 Guard tenoning machine feed chains and sprockets.

You must:

• Guard feed chains and sprockets of all double-end tenoning machines by completely enclosing both of the following:

– All sprockets;

AND

– Portions of the chain that are not used for conveying stock.

[Statutory Authority: RCW 49.17.010, 49.17.040, 49.17.050, and 49.17.060. 04-14-028, § 296-806-48076, filed 6/29/04, effective 1/1/05.]

WAC 296-806-48078 Guard tenoning machines.

You must:

• Make sure all cutting heads, and saws if used, are covered by a metal guard that:

– Covers at least the unused part of the periphery of the cutting head.

– Forms all or part of the exhaust hood if an exhaust system is used.

• Make sure a guard constructed from:

– Sheet metal is at least one-sixteenth inch thick.

– Cast iron is at least three-sixteenths inch thick.

[Statutory Authority: RCW 49.17.010, 49.17.040, 49.17.050, and 49.17.060. 04-14-028, § 296-806-48078, filed 6/29/04, effective 1/1/05.]

VENEER MACHINES

WAC 296-806-48080 Guard veneer cutters and wringer knives.

You must:

• Provide guards to prevent accidental contact with the front or rear knife edge.

[Statutory Authority: RCW 49.17.010, 49.17.040, 49.17.050, and 49.17.060. 04-14-028, § 296-806-48080, filed 6/29/04, effective 1/1/05.]

WAC 296-806-48082 Guard veneer clippers.

You must:

• Make sure employees do not accidentally contact the knife edge of veneer clippers by providing either:

– An automatic feed;

OR

– Guarding at both the front and rear of the clippers.

[Statutory Authority: RCW 49.17.010, 49.17.040, 49.17.050, and 49.17.060. 04-14-028, § 296-806-48082, filed 6/29/04, effective 1/1/05.]

WAC 296-806-48084 Follow these requirements for guarding guillotine cutters.

Exemption: These requirements do not apply to continuous-feed trimmers.

You must:

(1) Provide **one** of the following to hand and foot powered guillotine cutters, so employees' hands cannot reach the cutting edge of the knife:

• Rods.

• Plates.

• Other satisfactory means of protection such as those outlined in, Safeguarding methods, WAC 296-806-20042 through 296-806-20058.

(2) Provide power-driven guillotine veneer cutters with either of the following:

• Starting devices for each operator that require all of the following:

– Both hands activating controls at the same time to start the cutting motion;

– At least one hand on a control during the complete stroke of the knife;

OR

• An automatic guard that does all of the following:

– Keeps the hands of the operator away from the danger zone every time the blade comes down.

– Is used in combination with one-handed starting devices that require two separate movements of the device to start the cutting motion.

– Is designed to return positively to the nonstarting position after each complete cycle of the knife.

[Statutory Authority: RCW 49.17.010, 49.17.040, 49.17.050, and 49.17.060. 04-14-028, § 296-806-48084, filed 6/29/04, effective 1/1/05.]

WAC 296-806-48086 Provide mechanisms to stop power-driven guillotine cutters.

Exemption: This requirement does not apply to continuous-feed trimmers.

You must:

• Provide power-driven guillotine cutters with both:

– Brakes or other stopping mechanism;

AND

– An emergency device that will prevent the machine from operating if the brake fails when the starting mechanism is in the nonstarting position.

[Statutory Authority: RCW 49.17.010, 49.17.040, 49.17.050, and 49.17.060. 04-14-028, § 296-806-48086, filed 6/29/04, effective 1/1/05.]

WAC 296-806-48088 Prohibit riders on veneer slicer carriages.

You must:

• Prohibit employees from riding on veneer slicer carriages.

[Statutory Authority: RCW 49.17.010, 49.17.040, 49.17.050, and 49.17.060. 04-14-028, § 296-806-48088, filed 6/29/04, effective 1/1/05.]

SEWING MACHINES

WAC 296-806-485 Summary. In addition to the requirements in this section, you need to refer to the following sections of this chapter in order to fully protect your employees from machine hazards:

• Requirements for all machines, WAC 296-806-200 and 296-806-300.

This section applies to the hazards of needle injuries from domestic or light duty sewing machines.

Your responsibility:

To protect employees from hazards associated with sewing machines.

You must:

Guard sewing machine needles

WAC 296-806-48502.

[Statutory Authority: RCW 49.17.010, 49.17.040, 49.17.050, and 49.17.060. 04-14-028, § 296-806-485, filed 6/29/04, effective 1/1/05.]

WAC 296-806-48502 Guard sewing machine needles.

Exemption: This section does not apply to domestic-type sewing machines having a presser-foot that is in the "down" position during operation of the machine.

You must:

• Provide a permanently attached guard on each sewing machine that:

– Prevents the operator's fingers from passing under the needle.

– Allows the needle to be conveniently threaded without removing the guard.

Reference: For specific requirements about safeguarding sewing machine belts can be found in, Safeguard belt and rope drives, WAC 296-806-30004.

[Statutory Authority: RCW 49.17.010, 49.17.040, 49.17.050, and 49.17.060. 04-14-028, § 296-806-48502, filed 6/29/04, effective 1/1/05.]

WAC 296-806-500 Definitions.

Abrasive wheel

A grinding tool consisting of bonded abrasive grains. This includes diamond and reinforced wheels.

Adjustable barrier guard

A barrier guard with provisions for adjustment to accommodate various jobs or tooling set-ups.

Air-lift hammer

A type of gravity drop hammer in which the ram is raised for each stroke by an air cylinder. Because the length of stroke can be controlled, ram velocity, and therefore the energy delivered to the work piece, can be varied.

Antirepeat

A device that limits the machine to a single stroke if the activating means is held in the operative position.

Arbor

A rotating shaft used for mounting and transmitting torque to a cutting tool.

Authorized person

Someone the employer has given the authority and responsibility to perform a specific assignment.

Awareness barrier

A barrier device that allows more access to the hazard area, but still restricts access enough to warn of an approaching hazard.

Barricade

A barrier such as a guardrail, fence, or other framework designed to prevent employee access and exposure to a hazard.

Barrier guard

A barrier that provides a physical restriction from a hazard.

Belt conveyors

An endless belt of any material, operating over suitable pulleys to move materials placed on the belt.

Belt pole

A device used in shifting belts on and off fixed pulleys on line or countershaft where there are no loose pulleys. Belt poles are sometimes called "belt shippers" or "shipper poles."

Belt shifter

A device for mechanically shifting belts from tight to loose idler pulleys or vice versa, or for shifting belts on cones of speed pulleys.

Bench grinder

A bench mounted off-hand grinding machine with either one or two wheels mounted on a horizontal spindle.

Bending

The application of stress concentrated at specific points to permanently turn, press or force from a straight, level or flat condition to a curved or angular configuration.

Blade

A replaceable tool having one or more cutting edges for shearing, notching or coping.

Blanking

To bypass a portion of the sensing field of a presence-sensing device. The purpose is to allow objects such as tooling, feed stock, and work pieces to pass through the sensing field without sending a stop signal to the controlled machine. There are two blanking modes: Fixed and floating.

Blind hole

A hole drilled in an object, such as an abrasive wheel, that does not go all the way through the object.

Blotter

A compressible disc or washer, usually of blotting paper, plastic, cardboard, or gasket material, that is used between the wheel and the flanges to evenly distribute flange pressure on the wheel.

Board hammer

A type of gravity drop hammer where wood boards attached to the ram are raised vertically by action of contrarotating rolls, and then released. Energy for forging is obtained by the mass and velocity of the freely falling ram and the attached upper die.

Bolster plate

Plate attached to the press bed having holes, T-slots, or other means for attaching the lower die or die shoe.

Brake

Mechanism for stopping or preventing motion.

Chain conveyor

A conveyor in which one or more chains (including those with paddles or bars attached to them) move the conveyor. Specific examples of chain conveyors include drag, rolling, pusher bar, pusher chain and sliding chain conveyors.

Channel blanking

A feature that allows a safety light curtain system to be programmed to ignore objects. Also called "fixed blanking."

Chipper

A machine that cuts material into chips.

Chuck

A revolving clamp-like device used for holding and driving the work piece.

Clutch

A mechanism to couple the flywheel to the crankshaft. When engaged, it allows the driving force to be transmitted to the press slide.

Comb

See feather board.

Concurrent

Occurring at the same time.

Cone pulley

A pulley having two or more steps in a conical shape for driving machinery.

Cone and plug wheels (Types 16, 17, 18, 18R, and 19)

Abrasive wheels manufactured with blind hole threaded bushings. They may be used on all surfaces except the flat mounting surface. Specific characteristics of the different cone and plug wheels are:

• Type 16 cones have a curved side with a nose radius.

• Type 17 cones have straight sides with or without a nose radius.

• Type 18 and 18R plug wheels are cylindrical in shape with either a square or curved grinding end.

• Type 19 cone wheels are a combination of cone and plug shapes.

Control system

Sensors, manual input and mode selection elements, interlocking and decision-making circuitry, and output elements of the press-operating devices and mechanisms.

Coping-notching

Where the edge or periphery of the work piece is sheared.

Counterbalance

Mechanism used to balance or support the weight of the connecting rods, slide, and slide attachments.

Cutting-off wheels

Abrasive wheels used to cut material such as masonry, pipe, etc.

Cutting tool or saw blade

A tool used on a metal sawing machine.

Cycle

The complete movement of the ram from its starting position and return to that same starting position.

Dado

A straight-sided groove, perpendicular to the face of the work piece, having a width greater than the thickness of a single saw blade.

Device

A control or attachment that is any of the following:

• Restrains the operator from inadvertently reaching into the hazardous area.

• Prevents normal or hazardous operation if any part of an individual's body is inadvertently within the hazardous area.

• Automatically withdraws the operator's hands, if the operator's hands are inadvertently within the hazardous area during the hazardous portion of the machine cycle.

• Maintains the operator or the operator's hands during the hazardous portion of the machine cycle at a safe distance from the hazardous area.

Die or dies

Tooling used in a press for shearing, punching, forming, drawing, or assembling metal or other material.

Die enclosure guard

Guard attached to the die shoe or stripper in a fixed position.

Die setter

A person who installs or removes dies from the press, and makes the necessary adjustments so the tooling functions properly and safely.

Die setting

Process of installing or removing dies, and adjusting the dies, other tooling and the safeguarding guards or devices.

Die shoe

Plate or block that a die holder is mounted on. It functions primarily as a base for the complete die assembly and, if used, is bolted or clamped to the bolster plate or the face of the slide.

Die shutheight

Actual or design dimension between the mounting surfaces of a die.

Divider

A machine that mechanically divides the dough into pieces of predetermined volume or weight.

Dough sheeter

See **sheeter.**

Dressed

When material is removed from the cutting surfaces of an abrasive wheel to expose new sharp cutting surfaces.

Drilling/boring machine

A single or multiple spindle machine that uses a rotating cylindrical tool such as a drill, a counterboring tool, and similar tools to produce a hole, blind hole, counterbore, countersink, and similar cavities in work pieces. A work support means is provided to feed the tool into the work piece or the work piece into the tool.

Dross

Waste product or impurities formed on the surface of molten metal.

Dump bin and blender

That part of the flour handling system where the containers of flour are emptied.

Face of the slide

Surface of the slide to which the punch or upper die is generally attached.

Feather board/comb

A work-guiding and hold-down device consisting of stock with a series of spring-like fingers along the edge, set and positioned at an angle to the work piece.

Feeding

Placing material in or removing it from the point of operation.

Fence

A device used to locate and guide a work piece relative to the cutting tool.

Fixed barricade

A guard attached to a fixed surface used to enclose a hazardous area and prevent employees from placing any part of their body into the point of operation.

Fixed barrier guard

A guard attached to the frame, bolster, or other surface to enclose all or part of the point of operation or other hazard area.

Fixed blade

A stationary blade having one or more cutting edges.

Fixed blanking

A feature that allows a safety light curtain system to be programmed to ignore objects. Also called "channel blanking."

Fixture/jig

A device used to locate, hold, or clamp one or more work pieces in a desired position.

Flanges

Collars, discs, or plates between or against which wheels are mounted. There are four types of flanges:

- Adaptor.
- Sleeve.
- Straight relieved.
- Straight unrelieved.

Floating blanking (floating window)

A feature that allows a safety light curtain system to be programmed to ignore the interruption of one or two beams within the light curtain. This allows the feeding of an object through the defined area at any point along the length of the curtain without causing it to produce a stop signal.

Floorstand grinder

A floor mounted, off-hand grinding machine with one or two wheels mounted on a horizontal spindle. The wheels are normally twenty-four inches or thirty inches in diameter and used for snagging operations.

Forging

Metal formed to a desired shape by impact or pressure in hammers, forging machines (upsetters), presses, rolls, and related forming equipment. Forging hammers, counterblow equipment, and high-energy-rate forging machines impart impact to the work piece, while most other types of forging equipment impart squeeze pressure in shaping the stock. Some metals can be forged at room temperature, but the majority of metals are made more plastic for forging with heat. Forged or drop forged parts are much stronger than poured or cast parts from foundries.

Forging presses

A class of forging equipment where the shaping of metal between dies is performed by mechanical or hydraulic pressure and usually is accomplished with a single workstroke of the press for each die station.

Full revolution clutch

Type of clutch that, when engaged, cannot be disengaged until the press has completed a single cycle (stroke).

Gage

See **miter gage.**

Gap (throat)

An opening or recess in the frame of the machine to permit positioning of material or work pieces.

Gate or movable barrier device

Safeguarding device that encloses the point of operation before press motion can be initiated.

Guard (abrasive wheels)

An enclosure designed to restrain the pieces of an abrasive wheel and furnish protection to the operator if the wheel is broken during operation.

Guard

A barrier that does at least one of the following:

- Prevents the hands or other body part from reaching through, over, under, or around the guard into the hazard area.
- Prevents objects or debris from falling onto or being ejected towards an employee.

Guidepost

The pin attached to the upper or lower die shoe. It operates within the bushing on the opposing die shoe to maintain the alignment of the upper and lower dies.

Hazard

A condition that could cause physical harm to a person.

Hazard area

An area or space that poses an immediate or impending physical hazard.

Hog

A machine used for cutting or grinding slabs and other coarse residue from the mill.

Horizontal lathe

A turning machine in which the work piece revolves about a horizontal axis. While the work is revolving, it is being shaped by cutting tools working either parallel to the axis of the work or at an angle to the axis of the work.

Idler (pulley)

A pulley or roller on a shaft that presses against or rests on a drive belt to guide it or take up slack.

Inch

Die setting mode that engages the driving clutch so a small portion of one cycle (stroke) occurs, depending upon the length of time the operator control is held actuated.

Indirect recirculating ovens

Ovens that are equipped with a gas-tight duct system, a furnace, and a circulating fan. Combustion gases are circulated through this enclosed system and mixed with fresh combustion gases generated by the burner in the combustion chamber. A vent or overflow removes a portion of the gases to make room for the fresh gases added by the burner. No unburned gases or products of combustion enter the baking chamber.

Interlocked barrier guard

Barrier attached to the press frame and interlocked with the press control system so the press stroke cannot be started normally unless the guard, or its hinged or movable sections, enclose the point of operation.

Inverted swing and jump saws

Saws with a saw blade starting position below the table, where the blade must travel through the horizontal plane of the tabletop to make the cut on the stock.

Ironworker

A machine with multiple workstations at which various operations may be performed singly or simultaneously, including but not limited to:

- Punching;
- Shearing;
- Notching;
- Coping; and
- Forming.

Jig

See **fixture.**

Jog

Die setting mode where intermittent motion is imparted to the slide by momentary operation of the drive motor after the flywheel is at rest and the clutch is engaged.

Jointer

A machine that has a cylindrical cutter head with more than one knife or cutting edge. It has an adjustable in-feed means of work support, or an adjustable cutter head or knives, as well as a fence or other work piece guide.

Jump saw

A machine that utilizes a means of work support and hold down, and has a powered arbor on an arm that pivots about a point located behind the saw arbor at approximately the same height. At rest position the saw blade is below the work piece. See **inverted swing and jump saws.**

Kerf

The slot made by a saw blade as it saws through a work piece.

Kickback

The uncontrolled propulsion or self-feed type action of a work piece in the direction of the rotation or travel of the working portion of the saw, cutting tool, sanding belt, or sanding head.

Live roller conveyor

A series of rollers with objects moving over them through power to all or some of the rollers. The power is usually transmitted by a belt or chain.

Mandrel

Tooling or a machine component used to provide internal support. It can be a spindle or shaft on which a tool is mounted, such as a drill bit.

Manlift

A device consisting of a power-driven endless belt moving in one direction only, and provided with steps or platforms and handholds attached to it for the transportation of personnel from floor to floor.

Manual feeding

The operator puts material or the part being processed into the press for each cycle (stroke).

Maximum exposure angle

The largest part of a wheel that does not need to be covered by a safety guard.

Miter gage

A device used as a work piece pusher, guided by a table groove.

Miter saw

A cutoff saw with a means of work support. It utilizes a powered arbor on an arm that pivots about a point located behind the saw arbor at approximately the same height. The saw arbor may also slide vertically. In the at-rest position, the saw blade is above the maximum capacity work piece.

Mode

The state or condition of the control system that allows specific operations of the machine.

Modified Types 6 and 11 wheels (terrazzo)

Similar to Type 6 "straight cup" wheels and Type 11 "flaring cup" wheels except for the bottom of the cup. The bottom of the cup is flat in Type 6 and 11 wheels. The modified wheels have bottoms that are sloped downwards towards the mounting hole. These modified wheels need to be mounted using a special tapered flange furnished by the tool manufacturer. These wheels are used in the terrazzo trade.

Molding machine

A machine that uses more than one arbor-mounted cylindrical, rotating cutting tool. It also uses power feeding, where once a work piece is engaged, it carries the work piece linearly through the balance of the intended operations, without further operator action. Operations can be performed on all surfaces of a work piece. Work pieces can be hopper- or hand-loaded and are fed ribbon-style into the machine.

Mortiser

A machine designed to produce a square or rectangular cavity through use of a moving, forming, or reciprocating tool. Means are provided to clamp and support the stock, and either move the stock into the tool or the tool into the stock.

Moulder

A machine in which the dough pieces are shaped and formed prior to final proofing.

Mounted wheels

Bonded abrasive wheels of various shapes, usually two inches diameter or smaller, that are secured to plain or threaded steel shafts or mandrels.

Movable barrier device

See **gate or movable barrier device.**

Nip-point belt and pulley guard

A guard that encloses the pulley and has rounded or rolled edge slots for the belt to pass through.

Off-hand grinding

Grinding of a work piece that is held in the operator's hand.

Overland conveyor

A single or series of belt conveyors designed to carry bulk material long distances, usually following the general contour of the land.

Part revolution clutch

Type of clutch that can be disengaged before the press slide completes a full stroke.

Pedestal grinder

An off-hand grinding machine similar to a bench grinder mounted on or otherwise attached to a floor-mounted pedestal.

Pinch point

Any point, other than the point of operation, where it is possible for a part of the body to be caught between moving parts or between a moving part and stationary one.

Planer

A machine with at least one cylindrical cutter head, that includes one or more inserted knife or cutting edge. A planer has a cutter head mounted over a means of work support. It also uses either an adjustable work support or cutter head to size the stock. The work piece is usually power-fed.

Point of operation

The area on a machine where work is actually performed upon the material being processed.

Power-driven hammers

Types of drop hammers in which the ram is raised for each stroke by a double-action steam, air, or hydraulic cylinder, and the energy delivered to the work piece is supplied by the velocity and weight of the ram and attached upper die driven downward by steam, air, or hydraulic pressure. Energy delivered during each stroke may be varied.

Power transmission parts

The mechanical components of a piece of equipment that, together with a source of power (sometimes referred to as a prime mover), provide the motion to a part of a machine or piece of equipment.

Presence-sensing device

A device that creates a sensing field, area, or plane to detect the presence of an individual or object.

Presence-sensing device initiation (PSDI)

Operating mode of a mechanical power press where a single cycle (stroke) is initiated by a presence-sensing device when it senses that the operator has finished feeding or removing parts and all parts of the operator's body are withdrawn from the sensing field of the device.

Pull-back device

A device attached to the operator's hands and connected to the upper die or slide of the press that will pull the operator's hands out of the point of operation as the dies close.

Push block

A nonmetallic device with one or more handles. A push block also has a flat bottom surface with either a heel or friction material on it, used as a hold-down and feed device. The purpose of this is to provide a safe distance between the hands and the cutting tool.

Pusher-bar conveyor

Two endless chains cross-connected at intervals by bars or pushers that propel the load along the bed or trough.

Push stick

A nonmetallic stick shaped device designed to provide a safe distance between the hands and the cutting tool. It has, as part of its design, a notched end with a heel and toe to hold down and feed the work piece past the cutting tool.

Racks

Carriers of pans, panned dough and bakery products. They are usually constructed of metal and mounted on casters or provided with trolleys for use on a monorail system.

Reinforced wheels

Organic bonded abrasive wheels which have webbing, fabric or filament to provide resistance to complete breaking of the wheel should it become cracked or damaged.

Repeat

An unintended or unexpected successive stroke of the press resulting from a malfunction.

Restraint device

A device with attachments for the operator's hands and wrists that prevent the operator from reaching into the hazardous area.

Return-belt idlers

A roller that supports the return run of the conveyor belt.

Ripping

A sawing operation made through the thickness of the work piece with the grain of natural wood, along the long dimension of a rectangular work piece, and usually parallel to that edge on reconstituted wood products. Two or more pieces result from the operation.

Rivet-making machines

The same as upsetters and bolt-headers when producing rivets with stock diameter of one inch or more.

Riving knife

See **spreader.**

SFPM

See **surface feet per minute.**

Safeguarding by location

Because of its location, no employee can inadvertently come in contact with a hazard during operation, maintenance, or servicing.

Safeguarding by distance

Employees are kept far enough from a hazard that they will not contact or be injured by the hazard.

Safeguarding device

See **device.**

Safety block

A prop inserted between the upper and lower dies or between the bolster plate and the face of the slide to prevent the slide from falling of its own weight.

Safety cylinder

This safety device may be of the direct cushion type integral with the main cylinder or it may be of the separate cushion type whereby a constant supply of live steam or air is applied behind a separate piston adjacent to the main cylinder. A spring, suitably constrained, may also be employed.

Safety cylinder head

An air cushion at the top of the hammer, just below the head, to protect the head from damage by the piston.

Scale

Any layer or leaf of metal resembling the scale of a fish in size and thinness; such as a scale of iron.

Screw conveyor

A screw or auger that revolves in a suitably shaped trough or casing, used to move material in one specific direction.

Shaper

A machine that uses one or more vertical spindles that are either fixed or able to be tilted, usually with an arbor mounted rotating cylindrical cutter, to form decorative or functional forms on a manually or power-fed work piece. The work piece is supported on a stationary or moving table. A guide, fixture, or template is used to control the operation. The spindle can be mounted above or below the work support means.

Sheeter

A machine that forms dough into a sheet by compression through one or more sets of driven rolls.

Sifter

A device that sifts flour. Sifter types are brush, oscillating, or vibrating.

Single stroke mechanism

Used on a full revolution clutch to limit the travel of the slide to one complete stroke at each engagement of the clutch.

Slat and roller slat conveyor

A conveyor employing one or more endless chains to which nonoverlapping, noninterlocking, spaced slats are attached.

Slide

Part of the press that moves back and forth in a straight line. Also called a ram, plunger, or platen.

Snagging

Grinding which removes relatively large amounts of material without regard to close tolerances or surface finish.

Spreader

A flat metal device slightly narrower than the saw kerf. It is designed to prevent the saw blade kerf in the work piece from closing on the sides of the blade during a sawing operation.

Steam hammers

A type of drop hammer where the ram is raised for each stroke by a double-action steam cylinder and the energy delivered to the work piece is supplied by the velocity and weight of the ram and attached upper die driven downward by steam pressure. Energy delivered during each stroke may be varied.

Stripper

A mechanism or die part for removing parts or material from the punch.

Surface feet per minute (SFPM)

A measure of the speed of a point on the periphery (outer edge) of an abrasive wheel. It is calculated using the formula:

SFPM = .262 x diameter of the wheel (in inches) x RPM (revolutions per minute)

Example:

Wheel diameter = 24 inches

Spindle speed = 1000 RPM

SFPM = .262 x 24 x 1000 = 3,144 SFPM

Sweep device

A single or double arm (rod) attached to the upper die or slide of the press that is designed to move the operator's hands to a safe position as the dies close. Sweep devices are not allowed for point-of-operation safeguarding.

Swing saw/overhead swing cutoff saw

A machine with a means of work support using a powered arbor and circular saw blade that pivots about a point located above the saw arbor.

Tenoning machine

A machine designed to use two or more cylindrical cutters, or one or two circular saws, to size or prepare (or both) the ends of a work piece. The work piece is supported on a table or conveying means. A means for clamping the work piece is provided.

Terrazzo

A material of stone chips, such as marble, set in mortar and polished.

Threaded hole wheels

Abrasive wheels that have one central threaded bushing, securely anchored in place. They are mounted by being screwed onto a threaded machine spindle so that the wheel back seats firmly against an unrelieved flat back flange.

Tongs

Metal holder used to handle hot or cold forgings.

Tongue guard

An integral part of a safety guard that is located where the upper exposed part of the abrasive wheel meets the safety guard. It can be adjusted as necessary to maintain a set distance from the constantly decreasing diameter of the wheel.

Tooling

Elements for guiding or imparting a desired configuration to the material.

Top grinding

Grinding done above the horizontal centerline of the wheel.

Towed conveyor

An endless chain supported by trolleys from an overhead track or running in a track on the floor with means for towing floor-supported trucks, dollies, or carts.

Trimming presses

A class of auxiliary forging equipment that removes flash (metal splash) or excess metal from a forging. This trimming operation can also be done cold, as in can coining, a product-sizing operation.

Trip (or tripping)

Momentary actuation of the activating control to initiate the cycle (stroke).

Trued

When the cutting surfaces of an abrasive wheel have been reshaped to expose new sharp cutting surfaces.

Turnover bar

A bar used in die setting to manually turn the crankshaft of the press.

Two-hand device

A device that requires the concurrent use of both of the operator's hands to both initiate and continue the machine cycle during the hazardous portion of the machine cycle.

Two-hand trip device

A device that requires concurrent operation of the trip controls or levers by the operator's hands to initiate the machine cycle.

Type A movable gate

A device that encloses the hazardous area when the machine cycles and does not open until the end of the cycle.

Type B movable gate

A device that encloses the hazardous area when the machine cycles and opens when hazardous motion of the cycle is over. Type B devices are not allowed on full revolution type machinery.

Type 1 wheel

An abrasive wheel shaped like a disc with a mounting hole in the middle. Sometimes called a "straight wheel." It has diameter (D), thickness (T), and hole size (H) dimensions. Grinding is normally done on the periphery (outside curve) of the wheel (T dimension). Can be used for grinding, cutting-off, and tuck pointing.

Type 2 wheel

An abrasive wheel shaped like an open-ended, hollow cylinder. Sometimes called a cylinder wheel. It has diameter (measured from the outer wall of the cylinder), wheel thickness (height of the cylinder), and rim thickness (thickness of the cylinder wall). Grinding is done on the end of the cylinder (rim thickness dimension).

Type 6 wheel

An abrasive wheel shaped like a straight-sided cup or bowl with a mounting hole in the bottom of the cup. Sometimes called a "cup wheel." It has diameter (D), thickness (T), hole size (H), rim thickness (W), and back thickness (E) dimensions. Grinding is normally done on the cup rim (W dimension).

Type 11 wheel

An abrasive wheel shaped like a cup or bowl with a mounting hole in the bottom of the cup. The sides of the cup are not straight-sided but are angled outward. Sometimes called a "flaring cup wheel" since the sides are "flared" out. It has double diameter dimensions (top D and bottom J). It also has thickness (T), hole size (H), rim thickness (W) and back thickness (E) dimensions. Grinding is normally done on the cup rim (W dimension).

Type 16, 17, 18, 18R, and 19 wheels

See cone and plug wheels.

Type 27 wheel

An abrasive wheel similar to a Type 1 wheel, but the center of the wheel around the mounting hole is pushed back (depressed). Sometimes called a "depressed center" wheel. It has diameter (D), thickness (U) and hole size (H) dimensions. The depressed center allows grinding on the flat surface of the wheel without interference from the flange or mounting hardware.

Type 27A cutting-off wheel

Similar to a Type 27 wheel. Specifically designed for use on cutting-off machines.

Type 28 wheel

An abrasive wheel similar to a Type 27 wheel, but the face of the wheel is angled upward and away from the mounting hole. The face of a Type 27 wheel is flat and perpendicular to the mounting hole. A Type 28 wheel is also called a "depressed center" wheel. It has diameter (D), thickness (U) and hole size (H) dimensions. The depressed center allows grinding without interference from the mounting. A Type 28 wheel has a saucer-shaped grinding rim and is designed for corner grinding and side grinding.

Type 29 wheel

An abrasive wheel that has reversed, saucer-shaped grinding rims (similar to a partially opened umbrella).

Unitized tooling

A die that has the upper and lower members incorporated into a self-contained unit that holds the die members in alignment.

Upsetters (or forging machines, or headers)

A type of forging equipment, related to the mechanical press, in which the main forming energy is applied horizontally to the work piece that is gripped and held by prior action of the dies.

Wood products

Wood products include wood and reconstituted wood products that generate chips or dust in the processing of a wood piece.

[Statutory Authority: RCW 49.17.010, 49.17.040, 49.17.050, and 49.17.060. 04-14-028, § 296-806-500, filed 6/29/04, effective 1/1/05.]

Chapter 296-807 WAC
PORTABLE POWER TOOLS

WAC

296-807-100	Scope.
296-807-110	Switches (controls).
296-807-11005	Make sure switches are safe.
296-807-120	Portable circular saws.
296-807-12005	Make sure portable circular saws are safe to use.
296-807-130	Portable belt sanding machines.
296-807-13005	Guard portable belt sanding machines.
296-807-140	Compressed air tools.
296-807-14005	Follow the manufacturer's instructions.
296-807-14010	Prevent air tools from ejecting attachments.
296-807-14015	Protect employees from contact with compressed air.
296-807-14020	Make sure safeguards are used when cleaning with compressed air.
296-807-14025	Make sure airhose and plastic pipe supplying compressed air to portable air tools are safe.
296-807-14030	Make sure air tools are adequately designed and constructed.
296-807-14035	Use air tools safely.
296-807-14040	Make sure fastener driving air tools (nailers and staplers) are safe.
296-807-150	Powder actuated fastening systems.
296-807-15005	Make sure tool operators are qualified.
296-807-15010	Make sure employees are aware tools are in use and wear appropriate personal protective equipment (PPE).
296-807-15015	Make sure tools are adequately designed and constructed.
296-807-15020	Make sure tools and containers are properly labeled.
296-807-15025	Make sure powder loads and power levels are properly identified.
296-807-15030	Use proper powder loads.
296-807-15035	Make sure the tool is appropriate to the job.
296-807-15040	Make sure the operator uses the tool safely.
296-807-15045	Use fasteners safely.
296-807-15050	Inspect and maintain tools properly.
296-807-15055	Make sure tools are stored properly.
296-807-160	Power lawnmowers.
296-807-16005	Make sure equipment meets minimum design and construction requirements.
296-807-16010	Make sure the equipment has the appropriate labels and decals.
296-807-16015	Make sure the operator understands and follows instructions before starting the mower.
296-807-16020	Use the equipment safely.
296-807-16025	Protect employees from fuel and exhaust.
296-807-16030	Use walk-behind mowers safely.
296-807-16035	Use ride-on mowers safely.
296-807-170	Jacks.

296-807-17005	Make sure jacks are labeled with their rated load(s).
296-807-17010	Make sure the jack is safe to lift the load.
296-807-17015	Lift the load safely.
296-807-17020	Visually inspect jacks and keep them in good working order.
296-807-180	Portable tools using abrasive wheels.
296-807-18005	Make sure abrasive wheels and tools are properly designed and constructed.
296-807-18010	Make sure machines have safety guards.
296-807-18015	Keep safety guards in good functional condition.
296-807-18020	Use specific safety guards for machines using Type 1 grinding wheels, cutting-off wheels, and tuck pointing wheels.
296-807-18025	Use specific safety guards for vertical and angle grinders using Type 6 or Type 11 wheels.
296-807-18030	Use specific safety guards for vertical and angle grinders using Type 27, 28 and 29 wheels.
296-807-18035	Use side handles on vertical and angle grinders.
296-807-18040	Make sure abrasive wheels are safe to use.
296-807-18045	Mount wheels properly.
296-807-18050	Use proper flanges.
296-807-18055	Make sure flanges are in good condition.
296-807-18060	Use specific flanges for Type 1 cutting-off wheels.
296-807-18065	Use specific flanges for Type 27A cutting-off wheels.
296-807-18070	Use specific flanges for threaded hole wheels.
296-807-18075	Use specific flanges for cup, cone or plug wheels with threaded inserts or projecting studs.
296-807-18080	Use blotters when required.
296-807-18085	Meet specific blotter requirements when using modified Types 6 and 11 wheels (terrazzo).
296-807-190	Definitions.

WAC 296-807-100 Scope. This chapter applies to the tools and equipment shown in Table 1, Scope of this chapter.

Table 1
Scope of this Chapter

Section:	Applies to:
110 Switches (controls)	Hand-held portable power tools.
120 Portable circular saws	Hand-held portable circular saws.
130 Portable belt sanding machines	Hand-held portable belt sanding machines.
140 Compressed air tools, hose, and pipe	Hand-held portable compressed air powered tools. It also applies to airhose and plastic pipe used to supply compressed air to these tools.
150 Powder actuating fastening systems	Powder actuated fastening systems designed to use the expanding gases from a powder load to propel a stud, pin, fastener, or other object into hard structural material.
160 Power lawnmowers	Consumer and commercial power lawnmowers.
170 Jacks	Portable hand- or power-operated: • Hydraulic jacks • Mechanical ratchet jacks • Mechanical screw jacks.
180 Portable tools using abrasive wheels	Portable tools using abrasive wheels.

[Statutory Authority: RCW 49.17.010, [49.17].040, [49.17].050, and [49.17].060. 03-09-009, § 296-807-100, filed 4/4/03, effective 8/1/03.]

WAC 296-807-110 Switches (controls). Summary.

Your responsibility:

Make sure hand-held portable power tools have safe switches (controls).

Exemption:

WAC 296-807-110 does not apply to:

- Concrete vibrators
- Concrete breakers
- Powered tampers
- Jack hammers
- Rock drills
- Garden appliances
- Household and kitchen appliances
- Personal care appliances
- Medical or dental equipment
- Fixed machinery.

[Statutory Authority: RCW 49.17.010, [49.17].040, [49.17].050, and [49.17].060. 03-09-009, § 296-807-110, filed 4/4/03, effective 8/1/03.]

WAC 296-807-11005 Make sure switches are safe.

You must:

(1) Make sure the operating switch is located in a position that makes it difficult to accidentally operate the tool.

(2) Use the correct operating switch.

• Make sure hand-held gasoline-powered chain saws have a constant pressure throttle control that will shut off power to the chain when the pressure is released.

• Use a constant pressure switch that will shut off the power when the switch is released to turn on or operate any hand-held power tool.

Exemptions:

• Some tools can use a lock-on feature with the constant pressure switch if the lock-on feature can be turned off with a single motion of the same finger(s) that turned it on. You can use a lock-on feature with these hand-held tools:

– Drills
– Tappers
– Fastener drivers
– Grinders using a wheel greater than two inches in diameter
– Disc sanders
– Belt sanders
– Reciprocating saws
– Saber, scroll and jig saws using a blade with a shank width greater than one-quarter inch
– Other similarly operating powered tools.

• You can use a positive "on-off" switch with these hand-held tools:

– Platen sanders
– Grinders using a wheel two inches or less in diameter
– Routers
– Planers
– Laminate trimmers
– Nibblers
– Shears
– Saber, scroll and jig saws using a blade with a shank width of one-quarter inch (± .05 inch) or less.

Note: The shank width of saber, scroll and jig saw blades is measured at the narrowest point on the blade shank.

[Statutory Authority: RCW 49.17.010, [49.17].040, [49.17].050, and [49.17].060. 03-09-009, § 296-807-11005, filed 4/4/03, effective 8/1/03.]

WAC 296-807-120 Portable circular saws.

Your responsibility:

Make sure portable circular saws are safe.

[Statutory Authority: RCW 49.17.010, [49.17].040, [49.17].050, and [49.17].060. 03-09-009, § 296-807-120, filed 4/4/03, effective 8/1/03.]

WAC 296-807-12005 Make sure portable circular saws are safe to use.

You must:

(1) Use a constant pressure switch to turn on or operate any circular saw using a blade that has a diameter greater than two inches.

(2) Remove cracked saws and saw blades from service.

(3) Make sure power driven circular saws that have a blade diameter larger than two inches have guards above and below the base plate (shoe) as listed in Table 2, Portable circular saw guarding requirements.

Table 2
Portable Circular Saw Guarding Requirements

Upper Guard	Lower Guard
Covers the blade to the depth of the teeth, except for the minimum arc necessary to allow the base to tilt for bevel cuts.	Covers the blade to the depth of the teeth, except for the minimum arc necessary to allow proper: • Retraction of the guard • Contact with the work. Automatically and instantly returns to the position covering the blade when the saw is withdrawn from contact with the work.

Exemption: Guarding requirements in subsection (3) of this section do not apply to saws used in the meat cutting industry to cut meat.

[Statutory Authority: RCW 49.17.010, [49.17].040, [49.17].050, and [49.17].060. 03-09-009, § 296-807-12005, filed 4/4/03, effective 8/1/03.]

WAC 296-807-130 Portable belt sanding machines.

Your responsibility:

Make sure portable belt sanding machines are safe.

[Statutory Authority: RCW 49.17.010, [49.17].040, [49.17].050, and [49.17].060. 03-09-009, § 296-807-130, filed 4/4/03, effective 8/1/03.]

WAC 296-807-13005 Guard portable belt sanding machines.

You must:

• Guard:

– Nip points where the sanding belt runs onto a pulley

– The unused run of the sanding belt.

[Statutory Authority: RCW 49.17.010, [49.17].040, [49.17].050, and [49.17].060. 03-09-009, § 296-807-13005, filed 4/4/03, effective 8/1/03.]

WAC 296-807-140 Compressed air tools. Summary.

This section applies to portable, hand-held compressed air powered tools. It also applies to airhose and plastic pipe used to supply compressed air to these tools.

Your responsibility:

Make sure compressed air and compressed air tools are used safely.

You must:

GENERAL TOOL REQUIREMENTS

Follow the manufacturer's instructions

WAC 296-807-14005

Prevent air tools from ejecting attachments

WAC 296-807-14010

CONTACT WITH COMPRESSED AIR

Protect employees from contact with compressed air

WAC 296-807-14015

CLEANING

Make sure safeguards are used when cleaning with compressed air

WAC 296-807-14020

AIRHOSE AND PLASTIC PIPE

Make sure airhose and plastic pipe supplying compressed air to portable air tools are safe

WAC 296-807-14025

TOOL DESIGN AND CONSTRUCTION

Make sure air tools are adequately designed and constructed

WAC 296-807-14030

TOOL USE

Use air tools safely

WAC 296-807-14035

FASTENER DRIVING TOOLS

Make sure fastener driving air tools (nailers and staplers) are safe

WAC 296-807-14040.

[Statutory Authority: RCW 49.17.010, [49.17].040, [49.17].050, and [49.17].060. 03-09-009, § 296-807-140, filed 4/4/03, effective 8/1/03.]

WAC 296-807-14005 Follow the manufacturer's instructions.

You must:

• Follow the manufacturer's instructions for safe use of the tool.

[Statutory Authority: RCW 49.17.010, [49.17].040, [49.17].050, and [49.17].060. 03-09-009, § 296-807-14005, filed 4/4/03, effective 8/1/03.]

WAC 296-807-14010 Prevent air tools from ejecting attachments.

You must:

• Make sure the tool cannot accidentally eject an attachment.

Note: A retainer is needed if the tool does not have a positive method of keeping the attachment in the tool.

[Statutory Authority: RCW 49.17.010, [49.17].040, [49.17].050, and [49.17].060. 03-09-009, § 296-807-14010, filed 4/4/03, effective 8/1/03.]

WAC 296-807-14015 Protect employees from contact with compressed air.

You must:

• Make sure a tool nozzle or an airhose opening is not:

– Pointed at anyone

– Allowed to contact a person's body.

[Statutory Authority: RCW 49.17.010, [49.17].040, [49.17].050, and [49.17].060. 03-09-009, § 296-807-14015, filed 4/4/03, effective 8/1/03.]

WAC 296-807-14020 Make sure safeguards are used when cleaning with compressed air.

You must:

• **Use the following when cleaning with compressed air:**

– Air pressure that has been reduced to less than 30 p.s.i. static pressure at the nozzle

– Effective chip guarding.

Note:
- You may use air pressure greater than 30 p.s.i. if you use a nozzle with vents, holes, flaps or slots that will direct the air flow away from the tip of the nozzle and will reduce the air flow to less than 30 p.s.i if the nozzle becomes blocked.
- Effective chip guarding means any method or equipment that protects the eyes and skin of the cleaner and other workers from flying chips or particles. Examples include:
  - A protective cone around the nozzle to protect the cleaner
  - Barriers, baffles or screens to protect other workers.

Reference: Appropriate personal protective equipment (PPE) needs to be worn when cleaning with compressed air. See WAC 296-800-160 in the safety and health core rules.

[Statutory Authority: RCW 49.17.010, [49.17].040, [49.17].050, and [49.17].060. 03-09-009, § 296-807-14020, filed 4/4/03, effective 8/1/03.]

WAC 296-807-14025 Make sure airhose and plastic pipe supplying compressed air to portable air tools are safe.

You must:

(1) Make sure the airhose and hose connections are suitable for the:

• Air pressure

• Use.

(2) Make sure any plastic pipe used to supply compressed air for portable air tools has been specifically identified by the manufacturer as being suitable for compressed air use.

Note: Existing unapproved pipe that is buried underground or enclosed in shatter-resistant material is acceptable only if it completely eliminates the hazards created by the brittle nature of the pipe.

[Statutory Authority: RCW 49.17.010, [49.17].040, [49.17].050, and [49.17].060. 03-09-009, § 296-807-14025, filed 4/4/03, effective 8/1/03.]

WAC 296-807-14030 Make sure air tools are adequately designed and constructed.

Exemption:

This section does not apply to:

• Tools specifically for medical or dental use

• Tools specifically for use in the food processing industry

• Tools mounted in stationary installations

• Air hoists

• Construction and mining tools such as paving breakers, diggers, tampers, and rock drills.

You must:

• Make sure portable, hand-held air tools meet the requirements of:

– ANSI B186.1-1984, Safety Code for Portable Air Tools.

OR

– ANSI/ISANTA SNT-101-1993, Portable, Compressed-Air-Actuated, Fastener Driving Tools-Safety Requirements for.

Note: There may be a statement on the tool or in the instruction manual indicating the tool meets the requirements of the appropriate ANSI standard. If in doubt, check with the manufacturer.

[Statutory Authority: RCW 49.17.010, [49.17].040, [49.17].050, and [49.17].060. 03-09-009, § 296-807-14030, filed 4/4/03, effective 8/1/03.]

WAC 296-807-14035 Use air tools safely.

Exemption:

This section does not apply to:

• Tools specifically for medical or dental use

• Tools specifically for use in the food processing industry

• Tools mounted in stationary installations

• Air hoists

• Construction and mining tools such as paving breakers, diggers, tampers, and rock drills.

You must:

(1) Relieve the pressure in the air line before disconnecting a compressed air tool from the line or disconnecting a hose joint unless there is automatic valve closing protection at the joint being separated.

(2) Disconnect the tool from the compressed air supply before repairs are done.

(3) Make sure that eye protection is worn at all times by:

• The person operating the tool

• Other persons in the area where tools are being used.

References:
- Use the PPE hazard assessment to determine which employees other than the tool operator need to wear eye protection and the type of eye protection they need to wear. See WAC 296-800-160 in the safety and health core rules.
- Chapter 296-62 WAC, Part K, Hearing conservation, may require the use of hearing protection.

[Statutory Authority: RCW 49.17.010, [49.17].040, [49.17].050, and [49.17].060. 03-09-009, § 296-807-14035, filed 4/4/03, effective 8/1/03.]

WAC 296-807-14040 Make sure fastener driving air tools (nailers and staplers) are safe.

You must:

(1) Make sure any fastener driving air tool discharges all air in the tool when disconnected from the compressed air supply.

(2) Make sure that all pneumatically driven nailers, staplers, and other similar equipment provided with automatic fastener feed have a safety device on the muzzle to prevent the tool from ejecting fasteners, unless the muzzle is in contact with the work surface.

Note: Pneumatic nailers or staplers do not need this safety device if:
- The overall weight of the fastening device does not exceed the weight of one and one-half inches of standard 18-gauge wire. The normal maximum diameter tolerance for manufacturing standard 18-gauge wire is .045 inches.
- The operator and any other person within twelve feet of the point of operation wear approved eye protection.

[Statutory Authority: RCW 49.17.010, [49.17].040, [49.17].050, and [49.17].060. 03-09-009, § 296-807-14040, filed 4/4/03, effective 8/1/03.]

WAC 296-807-150 Powder actuated fastening systems. Summary.

IMPORTANT:

This section applies to any powder actuated fastening system designed to use the expanding gases from a powder load to propel a stud, pin, fastener, or other object into hard structural material.

Exemption:

This section does not apply to:

• Devices designed to attach objects to soft construction material such as wood, plaster, tar, and dry wallboard

• Stud welding equipment.

Your responsibility:

Make sure powder actuated fastening systems are used safely.

You must:

TOOL OPERATORS

Make sure tool operators are qualified

WAC 296-807-15005

PERSONAL PROTECTIVE EQUIPMENT

Make sure employees are aware tools are in use and wear appropriate personal protective equipment (PPE)

WAC 296-807-15010

TOOL DESIGN AND CONSTRUCTION

Make sure tools are adequately designed and constructed

WAC 296-807-15015

LABELING

Make sure tools and containers are properly labeled

WAC 296-807-15020

POWDER LOADS

Make sure powder loads and power levels are properly identified

WAC 296-807-15025

Use proper powder loads

WAC 296-807-15030

TOOL USE

Make sure the tool is appropriate to the job

WAC 296-807-15035

Make sure the operator uses the tool safely

WAC 296-807-15040

FASTENERS

Use fasteners safely

WAC 296-807-15045

INSPECTION AND MAINTENANCE

Inspect and maintain tools properly

WAC 296-807-15050

STORAGE

Make sure tools are stored properly

WAC 296-807-15055

[Statutory Authority: RCW 49.17.010, [49.17].040, [49.17].050, and [49.17].060. 03-09-009, § 296-807-150, filed 4/4/03, effective 8/1/03.]

WAC 296-807-15005 Make sure tool operators are qualified.

You must:

• Make sure tools are used only by qualified operators

• Make sure operators have been trained by an authorized instructor.

Note: Authorized instructors have to meet the instructor qualifications of ANSI A10.3-1995, Safety Requirements for Powder-Actuated Fastening Systems.

You must:

• Make sure all tool operators can:

- Understand the manufacturer's instructions
- Clean the tool properly
- Recognize any visibly worn or damaged parts
- Identify power load levels
- Operate the tool correctly.

• Make sure tool operators have a valid qualified operator's card in their possession when they are using the tool.

[Statutory Authority: RCW 49.17.010, [49.17].040, [49.17].050, and [49.17].060. 03-09-009, § 296-807-15005, filed 4/4/03, effective 8/1/03.]

WAC 296-807-15010 Make sure employees are aware tools are in use and wear appropriate personal protective equipment (PPE).

You must:

(1) Make sure eye or face protection is worn by:

• Tool operators

• Assistants

• Persons close to where the tool is being used.

Reference:
- Use the PPE hazard assessment to determine which employees other than the tool operator need to wear eye protection and the type of eye protection they need to wear. See WAC 296-800-160 in the safety and health core rules.
- Chapter 296-62 WAC, Part K, Hearing conservation may require the use of hearing protection.

You must:

(2) Post signs where tools are being used and in adjacent areas where tool use could pose a hazard. Signs must:

• Be easily seen

• Be at least 8 x 10 inches (20 x 25 cm)

• Use letters in boldface type at least one inch (2.5 cm) high

• Read "POWDER ACTUATED TOOL IN USE" or similar wording.

Note: Tool use could create a hazard in adjacent areas by allowing a fastener to penetrate one or more of the following:
• Wall
• Floor
• Other working surface.

[Statutory Authority: RCW 49.17.010, [49.17].040, [49.17].050, and [49.17].060. 03-09-009, § 296-807-15010, filed 4/4/03, effective 8/1/03.]

WAC 296-807-15015 Make sure tools are adequately designed and constructed.

You must:

(1) Make sure the tool meets the design and construction requirements of the American National Standards Institute (ANSI) standard ANSI A10.3-1995, Safety Requirements for Powder-Actuated Fastening Systems.

Note: There may be a statement on the tool or in the instruction manual indicating the tool meets the requirements of the appropriate ANSI standard. If in doubt, check with the manufacturer.

You must:

(2) Make sure each tool has:

• Operator instructions and a tool service manual

• Powder load and fastener chart

• Service tools and accessories.

[Statutory Authority: RCW 49.17.010, [49.17].040, [49.17].050, and [49.17].060. 03-09-009, § 296-807-15015, filed 4/4/03, effective 8/1/03.]

WAC 296-807-15020 Make sure tools and containers are properly labeled.

You must:

(1) Make sure tools are properly labeled.

• Make sure each tool has a readable, permanent label that shows the manufacturer's:

– Model number

– Unique serial number.

• Make sure there is a durable warning label on each tool that:

– Reads "WARNING - FOR USE ONLY BY QUALIFIED OPERATORS ACCORDING TO MANUFACTURER'S INSTRUCTION MANUAL"

OR

– Uses words with the same meaning.

(2) Make sure the tool storage container has these labels:

• "POWDER ACTUATED TOOL" on the outside of the container in an easily seen position

• "WARNING - POWDER ACTUATED TOOL. TO BE USED ONLY BY A QUALIFIED OPERATOR AND KEPT UNDER LOCK AND KEY WHEN NOT IN USE" on the inside cover.

[Statutory Authority: RCW 49.17.010, [49.17].040, [49.17].050, and [49.17].060. 03-09-009, § 296-807-15020, filed 4/4/03, effective 8/1/03.]

WAC 296-807-15025 Make sure powder loads and power levels are properly identified.

You must:

• Make sure powder loads and power levels are identified as specified in Table 3, Powder-Load Identification

Table 3
Powder-Load Identification

	Power Level	Color Identification	
		Case Color	Load Color
Lowest Level	1	Brass	Gray
	2	Brass	Brown
	3	Brass	Green
	4	Brass	Yellow
	5	Brass	Red
	6	Brass	Purple
	7	Nickel	Gray
	8	Nickel	Brown
	9	Nickel	Green
	10	Nickel	Yellow
Highest power level	11	Nickel	Red
	12	Nickel	Purple

[Statutory Authority: RCW 49.17.010, [49.17].040, [49.17].050, and [49.17].060. 03-09-009, § 296-807-15025, filed 4/4/03, effective 8/1/03.]

WAC 296-807-15030 Use proper powder loads.

You must:

• Use only a powder load that is:

– Recommended by the tool manufacturer for the particular tool

OR

– One that provides the same level of safety and performance.

[Statutory Authority: RCW 49.17.010, [49.17].040, [49.17].050, and [49.17].060. 03-09-009, § 296-807-15030, filed 4/4/03, effective 8/1/03.]

WAC 296-807-15035 Make sure the tool is appropriate to the job.

You must:

(1) Use the lowest velocity class of tool and load that will properly set the fastener.

(2) Use the proper shield, fixture, adaptor, or accessory that is:

• Suitable for the job

• Recommended and supplied by the manufacturer.

[Statutory Authority: RCW 49.17.010, [49.17].040, [49.17].050, and [49.17].060. 03-09-009, § 296-807-15035, filed 4/4/03, effective 8/1/03.]

WAC 296-807-15040 Make sure the operator uses the tool safely.

You must:

(1) Make sure the operator:

• Inspects the tool before using it, as recommended by the tool manufacturer

• Uses the tool according to the manufacturer's instructions

• Keeps the tool unloaded until just before using it

• Unloads the tool at once if work is interrupted after the tool has been loaded

• Does not leave a tool or powder load unattended where it would be available to an unauthorized person

• Never points a tool (loaded or unloaded) at any part of a person's body.

Note: A magazine or clip fed tool is not considered loaded until a powder load is actually in the ram (firing chamber).

You must:

(2) Make sure tools are not used in an explosive or flammable atmosphere.

(3) Do this if the tool misfires:

• Hold it firmly against the work surface for thirty seconds

Then

• Follow the instructions in the tool manufacturer's instruction manual.

(4) Hold the tool perpendicular to the work surface when fastening to any material.

Exemption:

This does not apply if the tool manufacturer recommends a different technique for a specific job.

[Statutory Authority: RCW 49.17.010, [49.17].040, [49.17].050, and [49.17].060. 03-09-009, § 296-807-15040, filed 4/4/03, effective 8/1/03.]

WAC 296-807-15045 Use fasteners safely.

You must:

(1) Use fasteners:

• Recommended by the tool manufacturer for the particular tool

OR

• Fasteners that provide the same level of safety and performance.

(2) Keep the fastener from passing completely through the structural material by using a backing material when driving a fastener into any material that is any of the following:

• Easily penetrated

• Thin

• Of questionable resistance.

(3) Make sure the material is suitable for fastening. Do not drive fasteners into very hard or brittle material such as:

• Cast iron
• Glazed tile
• Hardened steel
• Glass block
• Natural rock
• Hollow tile
• Most brick.

(4) Make sure positive alignment with an existing hole is maintained by using a guide or other means supplied or recommended by the tool manufacturer before driving a fastener into the hole.

(5) Make sure fasteners are not driven into any spalled (chipped or crumbled) area.

(6) Drive fasteners into concrete only if the fastener shank will penetrate no more than one-third the thickness of the concrete.

(7) Make sure fasteners are driven at least:

• One-half inch (13 mm) from the edge of steel
• Three inches (75 mm) from the unsupported edge of masonry material.

Exemption:

This does not apply if an application is specifically required or recommended by the tool manufacturer.

[Statutory Authority: RCW 49.17.010, [49.17].040, [49.17].050, and [49.17].060. 03-09-009, § 296-807-15045, filed 4/4/03, effective 8/1/03.]

WAC 296-807-15050 Inspect and maintain tools properly.

You must:

• Make sure any tool that is not in proper working condition is:

– Immediately removed from service
– Tagged
– Properly repaired as specified in the manufacturer's instructions before being used again.

• Regularly service the tool and inspect it for worn or damaged parts at intervals recommended by the tool manufacturer.

• Replace worn or damaged parts before the tool is used. This must be done:

– By a qualified person
– Using only parts supplied by the tool manufacturer.

• Keep a written record of inspection dates.

[Statutory Authority: RCW 49.17.010, [49.17].040, [49.17].050, and [49.17].060. 03-09-009, § 296-807-15050, filed 4/4/03, effective 8/1/03.]

WAC 296-807-15055 Make sure tools are stored properly.

You must:

(1) Make sure there is a container that can be locked for each tool.

(2) Make sure tools and powder loads that are not being used are:

• Locked in a container
• Stored in a safe place
• Only available to authorized persons.

(3) Store all manuals, maintenance tools, and accessories in the tool container when they are not being used.

[Statutory Authority: RCW 49.17.010, [49.17].040, [49.17].050, and [49.17].060. 03-09-009, § 296-807-15055, filed 4/4/03, effective 8/1/03.]

WAC 296-807-160 Power lawnmowers. Summary.

Exemption:

This section does not apply to commercial equipment that is:

• Designed primarily for agricultural purposes

OR

• Designed primarily to be operated with tractors having at least twenty horsepower for cutting grass or other growth on highways.

Your responsibility:

Make sure power lawnmowers are used safely.

You must:

DESIGN AND CONSTRUCTION

Make sure equipment meets minimum design and construction requirements

WAC 296-807-16005

LABELS

Make sure the equipment has the appropriate labels and decals

WAC 296-807-16010

BEFORE STARTING

Make sure the operator understands and follows instructions before starting the mower

WAC 296-807-16015

USE

Use the equipment safely

WAC 296-807-16020

NONELECTRIC MOWERS

Protect employees from fuel and exhaust

WAC 296-807-16025

WALK-BEHIND MOWERS

Use walk-behind mowers safely

WAC 296-807-16030

RIDE-ON MOWERS

Use ride-on mowers safely

WAC 296-807-16035.

[Statutory Authority: RCW 49.17.010, [49.17].040, [49.17].050, and [49.17].060. 03-09-009, § 296-807-160, filed 4/4/03, effective 8/1/03.]

WAC 296-807-16005 Make sure equipment meets minimum design and construction requirements.

You must:

(1) Make sure equipment meets ANSI design and construction requirements.

• Make sure power lawnmowers manufactured on or after August 1, 2003, meet the requirements of the appropriate ANSI standard:

– ANSI B71.1-1998, American National Standard for Consumer Turf Care Equipment - Walk-Behind Mowers and Ride-On Machines with Mowers - Safety Specifications

OR

– ANSI B71.4-1999, American National Standard for Commercial Turf Care Equipment - Safety Specifications.

• Make sure noncommercial power lawnmowers manufactured before the effective date of this chapter meet the requirements of ANSI B71.1-1968, American National Standard Safety Specifications for Power Lawnmowers.

Note: There may be a statement on the tool or in the instruction manual indicating the tool meets the requirements of the appropriate ANSI standard. If in doubt, check with the manufacturer.

You must:

(2) Position, guard or shield all power-driven shafts, chains, belts, gears, friction drive components, nip and pinch points, and any exposed components hot enough to cause burns while:

• Starting
• Mounting
• Operating the machine.

(3) Have a shutoff device that:

• Will stop the motor or engine

AND

• Has to be intentionally and manually activated before the motor or engine can be restarted.

[Statutory Authority: RCW 49.17.010, [49.17].040, [49.17].050, and [49.17].060. 03-09-009, § 296-807-16005, filed 4/4/03, effective 8/1/03.]

WAC 296-807-16010 Make sure the equipment has the appropriate labels and decals.

You must:

(1) Make sure all positions of the operating controls are clearly identified.

(2) Make sure warning and caution labels or decals on the mower are readable and replace them if necessary.

[Statutory Authority: RCW 49.17.010, [49.17].040, [49.17].050, and [49.17].060. 03-09-009, § 296-807-16010, filed 4/4/03, effective 8/1/03.]

WAC 296-807-16015 Make sure the operator understands and follows instructions before starting the mower.

You must:

(1) Make sure the operator understands all instructions for operating the mower that are in the manufacturer's instructions and on the machine.

• Make sure the operator is thoroughly familiar with the controls and proper use of the mower before starting it.

(2) Make sure the proper guards, plates, grass catcher or other safety devices are in place before starting the mower.

[Statutory Authority: RCW 49.17.010, [49.17].040, [49.17].050, and [49.17].060. 03-09-009, § 296-807-16015, filed 4/4/03, effective 8/1/03.]

WAC 296-807-16020 Use the equipment safely.

You must:

(1) Follow the manufacturer's instructions for safe use of the equipment.

(2) Keep people clear of discharge opening(s).

(3) Keep people's hands and feet clear of rotating parts.

(4) Clear the area of objects such as rocks, toys, wire, bones, sticks, etc., which could be picked up and thrown by the blade and create a hazard for the operator or other persons.

(5) Make sure the operator stops the engine before:

• Leaving the equipment
• Unclogging the grass discharge chute
• Cleaning the mower.

(6) Make sure the operator wears safety goggles or safety glasses with side shields when operating the mower.

Note: Use the personal protective equipment (PPE) hazard assessment to determine the type of footwear and other PPE the employees need to wear. See WAC 296-800-160, PPE, in the safety and health core rules.

[Statutory Authority: RCW 49.17.010, [49.17].040, [49.17].050, and [49.17].060. 03-09-009, § 296-807-16020, filed 4/4/03, effective 8/1/03.]

WAC 296-807-16025 Protect employees from fuel and exhaust.

Exemption:

This section does not apply to electric engines.

You must:

(1) Make sure to:

• Keep the gas cap on whenever the engine is running.
• Shut off the engine before and during refueling.

(2) Make sure not to refuel the machine indoors.

(3) Make sure not to run the engine in a closed area.

Exemption:

You can refuel the machine indoors or run the engine in a closed area if the area was specifically designed for such use.

[Statutory Authority: RCW 49.17.010, [49.17].040, [49.17].050, and [49.17].060. 03-09-009, § 296-807-16025, filed 4/4/03, effective 8/1/03.]

WAC 296-807-16030 Use walk-behind mowers safely.

You must:

(1) Make sure the operator wears substantial footwear when operating a walk-behind mower.

Note: Use the personal protective equipment (PPE) hazard assessment to determine the type of footwear and other PPE the employees need to wear. See WAC 296-800-160, PPE, in the safety and health core rules.

You must:

(2) Mow across the face of a slope.

[Statutory Authority: RCW 49.17.010, [49.17].040, [49.17].050, and [49.17].060. 03-09-009, § 296-807-16030, filed 4/4/03, effective 8/1/03.]

WAC 296-807-16035 Use ride-on mowers safely.

You must:

(1) Make sure not to carry passengers.

(2) Make sure the operator looks down and behind before and while moving backwards.

[Statutory Authority: RCW 49.17.010, [49.17].040, [49.17].050, and [49.17].060. 03-09-009, § 296-807-16035, filed 4/4/03, effective 8/1/03.]

WAC 296-807-170 Jacks. Summary.

IMPORTANT:

This section applies to portable hand- or power-operated:

• Hydraulic jacks
• Mechanical ratchet jacks
• Mechanical screw jacks.

Your responsibility:

Make sure jacks are safe to use.

You must:

LABELING

Make sure jacks are labeled with their rated load(s)

WAC 296-807-17005

BEFORE USE

Make sure the jack is safe to lift the load

WAC 296-807-17010

LIFTING THE LOAD

Lift the load safely

WAC 296-807-17015

INSPECTION AND MAINTENANCE

Visually inspect jacks and keep them in good working order

WAC 296-807-17020.

[Statutory Authority: RCW 49.17.010, [49.17].040, [49.17].050, and [49.17].060. 03-09-009, § 296-807-170, filed 4/4/03, effective 8/1/03.]

WAC 296-807-17005 Make sure jacks are labeled with their rated load(s).

You must:

• Make sure the rated load(s) of the jack is:

– Readable

– Durably marked in an easily seen location on the jack.

[Statutory Authority: RCW 49.17.010, [49.17].040, [49.17].050, and [49.17].060. 03-09-009, § 296-807-17005, filed 4/4/03, effective 8/1/03.]

WAC 296-807-17010 Make sure the jack is safe to lift the load.

You must:

(1) Visually examine the general condition of the jack before each use.

Note: If a jack is to be used more than once on a shift, the visual examination is only required before the jack is used for the first time that shift.

You must:

(2) Make sure the weight to be lifted or supported is within the rated load of the jack.

(3) Make sure the base of the jack is on a firm foundation or blocked before lifting the load.

(4) Make sure hydraulic jacks exposed to freezing temperatures function properly at the temperature they will be used.

[Statutory Authority: RCW 49.17.010, [49.17].040, [49.17].050, and [49.17].060. 03-09-009, § 296-807-17010, filed 4/4/03, effective 8/1/03.]

WAC 296-807-17015 Lift the load safely.

You must:

(1) Place a block between the load cap and the load if the load could slip off the jack.

(2) Secure the load from falling or slipping immediately after it is raised by one or more of the following:

• Cribbing

• Blocking

• Some other equally effective method.

(3) Make sure you do not exceed the limit of travel of the jack.

Note: The limit of travel can be determined by one or more of the following:
• A positive stop
• A stop indicator
• Some other equally effective method.

[Statutory Authority: RCW 49.17.010, [49.17].040, [49.17].050, and [49.17].060. 03-09-009, § 296-807-17015, filed 4/4/03, effective 8/1/03.]

WAC 296-807-17020 Visually inspect jacks and keep them in good working order.

Note: There are two types of inspection, frequent or periodic, depending on how often they are done.

You must:

(1) Inspect jacks at appropriate intervals:

• Make sure frequent inspections are done by the operator or other designated person as follows:

– Before a jack is first placed in service.

– Monthly for a jack used in normal service.

– Daily or before each use for a jack used for other than normal service.

– Before using a jack that has been altered, modified, or repaired.

– Before using a jack that has not been used in one year or more.

• Make sure a periodic inspection of the jack is done once a year.

• Inspect the jack using Table 4, Jack Inspection Requirements, during any frequent or periodic inspection.

(2) Make sure a jack that is out of order is:

• Tagged

• Not used until repaired.

(3) Make sure a jack is properly lubricated at regular intervals.

Note: The jack should be lubricated following the manufacturer's instructions.

Table 4
Jack Inspection Requirements

Inspection Item	Frequent Inspection	Periodic Inspection
Check all of the following items that apply to the jack:		
Improper pawl engagement	X	X
Excessive pawl wear	X	X
Chipped, cracked, or worn rack teeth	X	X
Damaged, bent, or worn threads	X	X
Leaking hydraulic fluid	X	X
Scored or damaged plunger	X	X
Improper functioning	X	X
Free movement of swivel, heads, and caps	X	X
Loose bolts or rivets	X	X
Damaged or improperly assembled accessory equipment	X	X
Rack wear or bending	X	X
Other items as specified in the manufacturer's instructions	X	X
Watch the jack during operation	X	X
More detailed inspection required if a designated person determines any condition discovered is a hazard	X	
Clean and check internal parts for wear or damage if inspection indicates an internal problem		X

[Statutory Authority: RCW 49.17.010, [49.17].040, [49.17].050, and [49.17].060. 03-09-009, § 296-807-17020, filed 4/4/03, effective 8/1/03.]

WAC 296-807-180 Portable tools using abrasive wheels. Summary.

IMPORTANT:

This section applies to portable tools using abrasive wheels.

Definition:

Abrasive wheel. A grinding tool consisting of bonded abrasive grains. This includes diamond and reinforced wheels.

Exemption: This section does not apply to machines using:

• Natural sandstone wheels
• Pulpstone wheels
• Coated abrasive products
• Loose abrasives.

Your responsibility:

Make sure abrasive wheel tools and wheels are safe to use.

You must:

DESIGN AND CONSTRUCTION

Make sure abrasive wheels and tools are properly designed and constructed
WAC 296-807-18005

GUARDS

Make sure machines have safety guards
WAC 296-807-18010

Keep safety guards in good functional condition
WAC 296-807-18015

GUARDS - SPECIFIC WHEELS

Use specific safety guards for machines using Type 1 grinding wheels, cutting-off wheels, and tuck pointing wheels
WAC 296-807-18020

Use specific safety guards for vertical and angle grinders using Type 6 or Type 11 wheels
WAC 296-807-18025

Use specific safety guards for vertical and angle grinders using Type 27, 28 and 29 wheels
WAC 296-807-18030

SIDE HANDLES

Use side handles on vertical and angle grinders
WAC 296-807-18035

ABRASIVE WHEELS

Make sure abrasive wheels are safe to use
WAC 296-807-18040

MOUNTING

Mount wheels properly
WAC 296-807-18045

FLANGES

Use proper flanges
WAC 296-807-18050

Make sure flanges are in good condition
WAC 296-807-18055

FLANGES - SPECIFIC WHEELS

Use specific flanges for Type 1 cutting-off wheels
WAC 296-807-18060

Use specific flanges for Type 27A cutting-off wheels
WAC 296-807-18065

Use specific flanges for threaded hole wheels
WAC 296-807-18070

Use specific flanges for cup, cone or plug wheels with threaded inserts or projecting studs
WAC 296-807-18075

BLOTTERS

Use blotters when required
WAC 296-807-18080

BLOTTERS - TYPE 6 AND 11 WHEELS

Meet specific blotter requirements when using modified Types 6 and 11 wheels (terrazzo)
WAC 296-807-18085.

[Statutory Authority: RCW 49.17.010, [49.17].040, [49.17].050, and [49.17].060. 03-09-009, § 296-807-180, filed 4/4/03, effective 8/1/03.]

WAC 296-807-18005 Make sure abrasive wheels and tools are properly designed and constructed.

You must:

• Make sure abrasive wheels and tools meet the design and construction requirements of:

– American National Standards Institute (ANSI) B7.1-2000, Safety Requirements for the Use, Care and Protection of Abrasive Wheels

OR

– ANSI B186.1-1984, Safety Code for Portable Air Tools.

Note: Tools may have a statement on the tool or in the instruction manual that the tool meets the appropriate ANSI standard. If in doubt, check with the manufacturer.

[Statutory Authority: RCW 49.17.010, [49.17].040, [49.17].050, and [49.17].060. 03-09-009, § 296-807-18005, filed 4/4/03, effective 8/1/03.]

WAC 296-807-18010 Make sure machines have safety guards.

You must:

• Use abrasive wheels only on machines that have safety guards.

• Make sure the safety guard:

– Is mounted so it maintains proper alignment with the wheel

– Is mounted with fasteners strong enough to keep the guard in position if a wheel breaks

– Is positioned to deflect pieces of an accidentally broken wheel away from the operator

– Covers the spindle end, nut, and flange projections.

Exemption:

Safety guards are not required on machines that use:

• Wheels for internal grinding while advancing, retracting or within the work

• Mounted wheels two inches or less in diameter

• Types 16, 17, 18, 18R, and 19 cones and plugs and threaded hole pot balls where:

– The work offers protection

OR

– The size does not exceed three inches in diameter by five inches long.

• Notched, segmented, or continuous rim metal centered diamond lapidary wheels that are:

– Used with a coolant deflector

AND

– Operated at 3,500 SFPM or less.

• Type 1 wheels that are:

– Two inches or less in diameter

– One-half inch or less thick

– Operating at peripheral speeds less than 1,800 SFPM

– Mounted on mandrels and used in portable drills.

• Type 1 reinforced wheels that are:

– Three inches or less in diameter one-quarter inch or less thick

– Operating at peripheral speeds of 9,500 SFPM or less

– Used by operators wearing safety glasses and face shields.

• Valve seating grinding wheels.

[Statutory Authority: RCW 49.17.010, [49.17].040, [49.17].050, and [49.17].060. 03-09-009, § 296-807-18010, filed 4/4/03, effective 8/1/03.]

WAC 296-807-18015 Keep safety guards in good functional condition.

You must:

• Make sure safety guards are in good functional condition.

• Replace any safety guard that:

– Is damaged, bent or severely worn

OR

– Has been hit by parts from a breaking wheel.

[Statutory Authority: RCW 49.17.010, [49.17].040, [49.17].050, and [49.17].060. 03-09-009, § 296-807-18015, filed 4/4/03, effective 8/1/03.]

WAC 296-807-18020 Use specific safety guards for machines using Type 1 grinding wheels, cutting-off wheels, and tuck pointing wheels.

You must:

• Make sure the safety guard covers the top and sides of the wheel for at least one hundred eighty degrees.

Note: It is not required to cover the spindle end, nut and outer flange.

[Statutory Authority: RCW 49.17.010, [49.17].040, [49.17].050, and [49.17].060. 03-09-009, § 296-807-18020, filed 4/4/03, effective 8/1/03.]

WAC 296-807-18025 Use specific safety guards for vertical and angle grinders using Type 6 or Type 11 wheels.

You must:

• Make sure the safety guard:

– Covers the wheel's plane of rotation toward the operator for at least one hundred eighty degrees

– Covers the side of the wheel toward the driving flange for at least one hundred eighty degrees

– Has a skirt which is adjustable to within one-eighth inch of the plane of the surface of the wheel.

• Make sure not to use a "revolving cup guard."

Note: "Cup back bushings" do not substitute for safety guards.

[Statutory Authority: RCW 49.17.010, [49.17].040, [49.17].050, and [49.17].060. 03-09-009, § 296-807-18025, filed 4/4/03, effective 8/1/03.]

WAC 296-807-18030 Use specific safety guards for vertical and angle grinders using Type 27, 28 and 29 wheels.

You must:

• Make sure safety guards:

– Cover the wheel's plane of rotation toward the operator for at least one hundred eighty degrees

– Cover the side of the wheel toward the driving flange for at least one hundred eighty degrees

– Have a lip on the outer edge that:

■ Extends beyond the surface of the wheel throughout the one hundred eighty degree coverage

AND

■ Curls inward to deflect wheel fragments.

[Statutory Authority: RCW 49.17.010, [49.17].040, [49.17].050, and [49.17].060. 03-09-009, § 296-807-18030, filed 4/4/03, effective 8/1/03.]

WAC 296-807-18035 Use side handles on vertical and angle grinders.

You must:

Use a side handle on all four-inch and larger vertical and angle grinders.

[Statutory Authority: RCW 49.17.010, [49.17].040, [49.17].050, and [49.17].060. 03-09-009, § 296-807-18035, filed 4/4/03, effective 8/1/03.]

WAC 296-807-18040 Make sure abrasive wheels are safe to use.

You must:

• Do the following before mounting a wheel:

– Visually inspect the wheel for cracks or damage

– Perform a ring test for cracks (size and shape of the wheel permitting)

– Make sure the spindle speed of the machine is not greater than the operating speed of the wheel.

• Make sure a damaged or cracked wheel is not mounted or used.

[Statutory Authority: RCW 49.17.010, [49.17].040, [49.17].050, and [49.17].060. 03-09-009, § 296-807-18040, filed 4/4/03, effective 8/1/03.]

WAC 296-807-18045 Mount wheels properly.

You must:

(1) Make sure wheels fit freely on the spindle, wheel sleeves, or adaptors, and remain free under all grinding conditions.

(2) Make sure wheel, blotter and flange surfaces that contact each other are flat and free of foreign particles.

(3) Make sure any reducing bushing used in the wheel hole:

• Fits freely on the spindle and maintains proper clearance • Does not exceed the width of the wheel or contact the flanges.

(4) Make sure that multiple wheels mounted between a single set of flanges are either:

• Cemented together

OR

• Separated by spacers that have a diameter and bearing surface that is the same as the mounting flanges.

[Statutory Authority: RCW 49.17.010, [49.17].040, [49.17].050, and [49.17].060. 03-09-009, § 296-807-18045, filed 4/4/03, effective 8/1/03.]

WAC 296-807-18050 Use proper flanges.

You must:

• Mount all abrasive wheels between flanges that have a diameter at least one-third the diameter of the wheel.

Exemption:

• Mounted wheels

• Cup, cone or plug wheels with threaded inserts or projecting studs

• Abrasive disc wheels (inserted nut, inserted washer and projecting stud type)

• Plate mounted wheels

• Cylinder, cup, or segmental wheels mounted in chucks

• Types 27, 28 and 29 wheels

• Internal wheels less than two inches in diameter

• Modified Type 6 and 11 wheels (terrazzo)

• Types 1 and 27A cutting-off wheels.

You must:

• Make sure flanges are:

– Dimensionally accurate

– Properly balanced

– Flat

– Free of rough surfaces or sharp edges.

• Make sure, if a wheel is mounted between two flanges, that both flanges:

– Are the same diameter

– Have equal bearing surfaces.

Exemption:

The following wheels do not require same diameter, equal bearing surface flanges:

• Types 27, 28, and 29 wheels with adaptors

• Modified Types 6 and 11 wheels with tapered K dimension

• Internal wheels less than two inches in diameter.

You must:

• Make sure the driving flange is:

– Part of the spindle

OR

– Securely fastened to the spindle.

[Statutory Authority: RCW 49.17.010, [49.17].040, [49.17].050, and [49.17].060. 03-09-009, § 296-807-18050, filed 4/4/03, effective 8/1/03.]

WAC 296-807-18055 Make sure flanges are in good condition.

You must:

• Make sure flange bearing surfaces are in good condition.

• Replace or remachine any flange with a mounting surface that has any of the following problems:

– Warped

– Burred on the bearing surface

– Excessively worn (thickness or diameter)

– Out of true.

Note: Flanges that are refaced or trued need to satisfy minimum dimension requirements specified in ANSI B7.1-2000, Safety Requirements for the Use, Care and Protection of Abrasive Wheels.

[Statutory Authority: RCW 49.17.010, [49.17].040, [49.17].050, and [49.17].060. 03-09-009, § 296-807-18055, filed 4/4/03, effective 8/1/03.]

WAC 296-807-18060 Use specific flanges for Type 1 cutting-off wheels.

You must:

• Mount Type 1 cutting-off wheels between flanges that are:

– Properly relieved with matching bearing surfaces

– At least one-quarter the wheel diameter.

Note: American National Standards Institute (ANSI) B7.1-2000, Safety Requirements for the Use, Care and Protection of Abrasive Wheels, has specific exemptions for some reinforced, bonded abrasive cutting-off wheels and steel centered, diamond cutting-off wheels. These wheels are primarily used for masonry cutting and concrete sawing.

[Statutory Authority: RCW 49.17.010, [49.17].040, [49.17].050, and [49.17].060. 03-09-009, § 296-807-18060, filed 4/4/03, effective 8/1/03.]

WAC 296-807-18065 Use specific flanges for Type 27A cutting-off wheels.

You must:

• Mount Type 27A cutting-off wheels between flanges that are:

– Flat (unrelieved) with matching bearing surfaces

– At least one-quarter the wheel diameter.

[Statutory Authority: RCW 49.17.010, [49.17].040, [49.17].050, and [49.17].060. 03-09-009, § 296-807-18065, filed 4/4/03, effective 8/1/03.]

WAC 296-807-18070 Use specific flanges for threaded hole wheels.

You must:

• Use a back flange to mount threaded hole wheels that is:

– Flat (unrelieved)

– Securely fastened and square to the spindle axis

– Able to properly support the wheel.

[Statutory Authority: RCW 49.17.010, [49.17].040, [49.17].050, and [49.17].060. 03-09-009, § 296-807-18070, filed 4/4/03, effective 8/1/03.]

WAC 296-807-18075 Use specific flanges for cup, cone or plug wheels with threaded inserts or projecting studs.

You must:

• Mount cup, cone or plug wheels with threaded inserts or projecting studs against a straight, unrelieved flange.

[Statutory Authority: RCW 49.17.010, [49.17].040, [49.17].050, and [49.17].060. 03-09-009, § 296-807-18075, filed 4/4/03, effective 8/1/03.]

WAC 296-807-18080 Use blotters when required.

You must:

• Use a blotter between each flange and the abrasive wheel surface to uniformly distribute flange pressure.

• Make sure the blotter covers the entire flange contact area.

• Use a new blotter each time a wheel is mounted unless the wheel has a blotter already attached to it by the manufacturer.

• Make sure scuffed or damaged blotters are not used.

Exemption:

You do not need to use a blotter with:

• Mounted wheels

• Abrasive disc and Type 2 wheels which are mounted by inserted nuts, inserted washers, or projecting studs

• Plate mounted wheels

• Wheels mounted in chucks (such as cylinders and segmental wheels)

• Types 27, 28 and 29 wheels

• Type 1 and Type 27A cutting-off wheels

• Internal wheels less than two inches in diameter

• Diamond and cubic boron nitride wheels with metal or carbon fiber cores.

[Statutory Authority: RCW 49.17.010, [49.17].040, [49.17].050, and [49.17].060. 03-09-009, § 296-807-18080, filed 4/4/03, effective 8/1/03.]

WAC 296-807-18085 Meet specific blotter requirements when using modified Types 6 and 11 wheels (terrazzo).

You must:

• Mount modified Types 6 and 11 wheels (terrazzo) with a blotter applied to the flat side of the wheel only.

[Statutory Authority: RCW 49.17.010, [49.17].040, [49.17].050, and [49.17].060. 03-09-009, § 296-807-18085, filed 4/4/03, effective 8/1/03.]

WAC 296-807-190 Definitions.

Abrasive wheel. A grinding tool consisting of bonded abrasive grains. This includes diamond and reinforced wheels.

Blind hole. A hole drilled in an object, such as an abrasive wheel, that does not go all the way through.

Blotter. A compressible disc or washer, usually of blotting paper, plastic, cardboard, or gasket material, that is used between the wheel and the flanges to evenly distribute flange pressure on the wheel.

Cone and plug wheels (Types 16, 17, 18, 18R, and 19). Abrasive wheels manufactured with blind hole threaded bushings. They may be used on all surfaces except the flat mounting surface (D). Specific characteristics of the different cone and plug wheels are:

• Type 16 cones have a curved side with a nose radius

• Type 17 cones have straight sides with or without a nose radius

• Type 18 and 18R plug wheels are cylindrical in shape with either a square or curved grinding end

• Type 19 cone wheels are a combination of cone and plug shapes

Cutting-off wheels. Abrasive wheels used to cut material such as masonry, pipe, etc.

Designated person. A person selected or assigned by the employer or the employer's representative as competent to perform specific duties.

Discharge opening. An opening in a mower housing for discharging grass.

Flanges. Collars, discs or plates between or against which wheels are mounted. There are four types of flanges:

• Adaptor

• Sleeve

• Straight relieved

• Straight unrelieved.

Grass catcher. Parts or a combination of parts to collect grass clippings or debris.

Guard (abrasive wheels). An enclosure designed to restrain the pieces of an abrasive wheel and furnish protection to the operator if the wheel is broken during operation.

Guard. A part or assembly to prevent accidental contact with hazardous machine parts or to protect persons from other hazards created by the machinery.

Inorganic bonded wheel. Abrasive wheels that are bonded by means of inorganic material such as clay, glass, porcelain, sodium silicate, magnesium oxychloride, or metal.

Jack. A portable hand- or power-operated mechanism for lifting, lowering or moving horizontally a load by applying a pushing force.

Modified Types 6 and 11 wheels (terrazzo). Similar to Type 6 "straight cup" wheels and Type 11 "flaring cup" wheels except for the bottom of the cup. The bottom of the cup is flat in Type 6 and 11 wheels. The modified wheels have bottoms that are sloped downwards towards the mounting hole. These modified wheels need to be mounted using a special tapered flange furnished by the tool manufacturer. These wheels are used in the terrazzo trade.

Mounted wheels. Bonded abrasive wheels of various shapes, usually two inches diameter or smaller, that are secured to plain or threaded steel mandrels.

Normal service (jacks). Raising or lowering axial loads that are eighty-five percent or less of the rated load under controlled conditions.

Organic bonded wheels. Abrasive wheels that are bonded by means of organic material such as resin, rubber, shellac, or other similar bonding agent.

Rated load. The maximum load that the jack is designed to lift or support.

Reinforced wheels. Organic bonded abrasive wheels which have webbing, fabric or filament to provide resistance to complete breaking of the wheel should it become cracked or damaged.

Terrazzo. A material of stone chips, such as marble, set in mortar and polished.

Threaded hole wheels. Abrasive wheels that have one central threaded bushing, securely anchored in place. They are mounted by being screwed onto a threaded machine spindle so that the wheel back seats firmly against an unrelieved flat back flange.

Tuck pointing wheels. Tuck pointing abrasive wheels are Type 1 reinforced, organic bonded wheels and have diameter, thickness and hole size dimensions. They are used to remove cement, mortar, or other nonmetallic jointing material.

Type 1 wheel. An abrasive wheel shaped like a disc with a mounting hole in the middle. Sometimes called a "straight wheel." It has diameter (D), thickness (T), and hole size (H) dimensions. Grinding is normally done on the periphery (outside curve) of the wheel (T dimension). Can be used for grinding, cutting-off, and tuck pointing.

Type 2 wheel. An abrasive wheel shaped like an open-ended, hollow cylinder. Sometimes called a cylinder wheel. It has diameter (measured from the outer wall of the cylinder), wheel thickness (height of the cylinder), and rim thickness (thickness of the cylinder wall). Grinding is done on the end of the cylinder (rim thickness dimension).

Type 6 wheel. An abrasive wheel shaped like a straight-sided cup or bowl with a mounting hole in the bottom of the cup. Sometimes called a "cup wheel." It has diameter (D), thickness (T), hole size (H), rim thickness (W), and back thickness (E) dimensions. Grinding is normally done on the cup rim (W dimension).

Type 11 wheel. An abrasive wheel shaped like a cup or bowl with a mounting hole in the bottom of the cup. The sides of the cup are not straight-sided but are angled outward. Sometimes called a "flaring cup wheel" since the sides are "flared" out. It has double diameter dimensions (top D and bottom J). It also has thickness (T), hole size (H), rim thickness (W) and back thickness (E) dimensions. Grinding is normally done on the cup rim (W dimension).

Type 16, 17, 18, 18R, and 19 wheels. See cone and plug wheels.

Type 27 wheel. An abrasive wheel similar to a Type 1 wheel, but the center of the wheel around the mounting hole is pushed back (depressed). Sometimes called a "depressed center" wheel. It has diameter (D), thickness (U) and hole size (H) dimensions. The depressed center allows grinding on the flat surface of the wheel without interference from the flange or mounting hardware.

Type 27A cutting-off wheel. Similar to a Type 27 wheel. Specifically designed for use on cutting-off machines.

Type 28 wheel. An abrasive wheel similar to a Type 27 wheel, but the face of the wheel is angled upward and away from the mounting hole. The face of a Type 27 wheel is flat and perpendicular to the mounting hole. A Type 28 wheel is also called a "depressed center" wheel. It has diameter (D), thickness (U) and hole size (H) dimensions. The depressed center allows grinding without interference from the mounting. A Type 28 wheel has a saucer-shaped grinding rim and is designed for corner grinding and side grinding.

Type 29 wheel. An abrasive wheel that has reversed, saucer-shaped grinding rims (similar to a partially opened umbrella).

[Statutory Authority: RCW 49.17.010, [49.17].040, [49.17].050, and [49.17].060. 03-09-009, § 296-807-190, filed 4/4/03, effective 8/1/03.]

Chapter 296-809 WAC
CONFINED SPACES

WAC

296-809-100 Scope.
296-809-200 Summary.
296-809-20002 Identify permit-required confined spaces.
296-809-20004 Inform employees and control entry to permit-required confined spaces.
296-809-20006 Follow these requirements when you contract with another employer to enter your confined space.

PERMIT-REQUIRED CONFINED SPACE PROGRAM

296-809-300 Summary.
296-809-30002 Develop a written permit-required confined space program.
296-809-30004 Meet these additional requirements if your employees enter another employer's confined space.

EMPLOYEE TRAINING

296-809-400 Summary.
296-809-40002 Provide employee training.
296-809-40004 Certify employee proficiency.

PERMIT ENTRY PROCEDURES

296-809-500 Summary.
296-809-50002 Implement procedures for entry permits.
296-809-50004 Use an entry permit that contains all required information.
296-809-50006 Keep and review your entry permits.
296-809-50008 Prevent unauthorized entry.
296-809-50010 Provide, maintain, and use proper equipment.
296-809-50012 Evaluate and control hazards for safe entry.
296-809-50014 Make sure you have adequate rescue and emergency services available.
296-809-50016 Use nonentry rescue systems or methods whenever possible.
296-809-50018 Make sure entry supervisors perform their responsibilities and duties.
296-809-50020 Provide an attendant outside the permit-required confined space.
296-809-50022 Make sure entrants know the hazardous conditions and their duties.
296-809-50024 Implement procedures for ending entry.
296-809-600 Alternate entry procedures.
296-809-60002 Make sure the following conditions are met if using alternate entry procedures.
296-809-60004 Follow these alternate entry procedures for permit-required confined spaces.
296-809-700 Nonpermit confined spaces requirements.
296-809-70002 Follow these requirements when classifying a confined space as a nonpermit confined space.
296-809-70004 Reevaluate nonpermit confined spaces if hazards develop.
296-809-800 Definitions.

WAC 296-809-100 Scope. This chapter applies to all confined spaces and provides requirements to protect employees from the hazards of entering and working in confined spaces. This chapter applies in any of the following circumstances:

• You have confined spaces in your workplace.

• Your employees will enter another employer's confined spaces.

• A contractor will enter your confined spaces.

• You provide confined space rescue services.

You can use Table 1 to help you decide which requirements to follow for confined spaces.

Table 1
Requirements for Confined Spaces

For confined spaces that are	The requirements in the following sections apply					
	200	300	400	500	600	700
Permit-required confined spaces	X	X	X	X	X	X
Entered by a contractor	X	X	X	X	X	X
Nonpermit confined spaces	X					X
Never entered	X					
If you only:						
Use alternate entry procedures	X	X	X		X	
Have a contractor enter your space	X					
Are a rescue service provider		X	X	X		

Definition:

A **confined space** is a space that is ALL of the following:

• Large enough and arranged so an employee could fully enter the space and work.

• Has limited or restricted entry or exit. Examples of spaces with limited or restricted entry are tanks, vessels, silos, storage bins, hoppers, vaults, excavations, and pits.

• Not primarily designed for human occupancy.

Rules in other chapters that cover confined spaces may also apply to your work. You can find a list of these rules in the resources section of this chapter.

Note: • Requirements in other chapters may apply to your work. You will find some safety and health requirements are addressed on a broad level in this chapter, while being

addressed for a specific application in another rule. When this happens, both requirements apply and should not conflict. When a conflict does occur, you need to follow the more specific requirement.
- If you are uncertain which requirements to follow, contact your local labor and industries (L&I) office.
- For a complete list of local L&I offices, see the resources section of the safety and health core rules, chapter 296-800 WAC.

[Statutory Authority: RCW 49.17.010, 49.17.040, 49.17.050, and 49.17.060. 04-03-081, § 296-809-100, filed 1/20/04, effective 5/1/04.]

WAC 296-809-200 Summary. Identifying and controlling permit-required confined spaces.

Your responsibility:

To identify your permit-required confined spaces and control employee entry.

You must:

Identify permit-required confined spaces.

WAC 296-809-20002

Inform employees and control entry to permit-required confined spaces.

WAC 296-809-20004

Follow these requirements when you contract with another employer to enter your confined space.

WAC 296-809-20006

[Statutory Authority: RCW 49.17.010, 49.17.040, 49.17.050, and 49.17.060. 04-03-081, § 296-809-200, filed 1/20/04, effective 5/1/04.]

WAC 296-809-20002 Identify permit-required confined spaces.

IMPORTANT:

If your workplace contains only nonpermit confined spaces and your employees do not enter another employer's confined space, you may follow only the requirements in:

– WAC 296-809-200, Identifying and controlling permit-required confined spaces; and

– WAC 296-809-700, Nonpermit confined space requirements.

• See the resources section for other chapters covering confined spaces that may apply to your work.

You must:

• Identify all permit-required confined spaces in your workplace.

• Assume any confined space is a permit-required confined space, unless you determine the space to be a nonpermit confined space.

– If you enter the space to determine the hazards, follow the requirements in WAC 296-809-500, Permit entry procedures.

– If you evaluate the confined space and there are no potential or actual hazards, you can consider it to be a nonpermit confined space.

■ Document your determination that the space is nonpermit, as required by WAC 296-809-700.

Definitions:

A **permit-required confined space or permit space** is a confined space that has one or more of the following characteristics capable of causing death or serious physical harm:

– Contains or has a potential to contain a hazardous atmosphere.

– Contains a material with the potential for engulfing someone who enters the space.

– Has an internal configuration that could allow someone entering to be trapped or asphyxiated by inwardly converging walls or by a floor, which slopes downward and tapers to a smaller cross-section.

– Contains any physical hazard. This includes any recognized health or safety hazards including engulfment in solid or liquid material, electrical shock, or moving parts.

– Contains any other recognized safety or health hazard that could either:

• Impair the ability to self rescue;

OR

• Result in a situation that presents an immediate danger to life or health.

A **nonpermit confined space** is a confined space that does NOT contain actual hazards or potential hazards capable of causing death or serious physical harm.

[Statutory Authority: RCW 49.17.010, 49.17.040, 49.17.050, and 49.17.060. 04-03-081, § 296-809-20002, filed 1/20/04, effective 5/1/04.]

WAC 296-809-20004 Inform employees and control entry to permit-required confined spaces.

You must:

(1) Provide information about confined spaces as follows:

• Make available to affected employees and their authorized representatives all information and documents required by this chapter.

• Inform affected employees about the existence, location, and danger of any permit-required confined spaces in your workplace by:

– Posting danger signs; or

– Using any other equally effective means to inform employees.

Note: A sign reading "Danger-Permit Required Confined Space, DO NOT ENTER" or using pictures or other similar wording employees can understand would satisfy the requirement for a sign.

You must:

(2) Take effective measures to prevent unauthorized employees from entering permit-required confined spaces.

Note: Examples of measures to prevent employee entry include padlocks, bolted covers, special tools to remove covers, and providing employee training.

[Statutory Authority: RCW 49.17.010, 49.17.040, 49.17.050, and 49.17.060. 04-03-081, § 296-809-20004, filed 1/20/04, effective 5/1/04.]

WAC 296-809-20006 Follow these requirements when you contract with another employer to enter your confined space.

IMPORTANT:

The contractor is responsible for following all confined space requirements in this chapter and in other rules that apply. For a list of other rules that may apply, see the resources section of this chapter.

You must:

• Do **all** of the following if you arrange to have another employer (contractor) perform work that involves entry into your permit-required confined space:

– Inform the contractor:

■ That the workplace contains permit-required confined spaces and entry is allowed only if the applicable requirements of this chapter are met.

■ Of the identified hazards and your experience with each permit-required confined space.

■ Of any precautions or procedures you require for the protection of employees in or near spaces where the contractor will be working.

– Coordinate entry operations with the contractor, when either employees or employers from the different companies will be working in or near permit-required confined spaces.

– Discuss entry operations with the contractor when they are complete. Include the following in your discussion:

■ The program followed during confined space entry; and

■ Any hazards confronted or created.

[Statutory Authority: RCW 49.17.010, 49.17.040, 49.17.050, and 49.17.060. 04-03-081, § 296-809-20006, filed 1/20/04, effective 5/1/04.]

PERMIT-REQUIRED CONFINED SPACE PROGRAM

WAC 296-809-300 Summary.

Your responsibility:

To develop your permit-required confined space program and practices.

IMPORTANT:

This section applies if employees will enter a permit-required confined space.

You must:

Develop a written permit-required confined space program.

WAC 296-809-30002

Meet these additional requirements if your employees enter another employer's confined space.

WAC 296-809-30004

[Statutory Authority: RCW 49.17.010, 49.17.040, 49.17.050, and 49.17.060. 04-03-081, § 296-809-300, filed 1/20/04, effective 5/1/04.]

WAC 296-809-30002 Develop a written permit-required confined space program.

IMPORTANT:

• Identify and evaluate the hazards of permit-required confined spaces and the work performed, to assist you in developing your entry program.

You must:

• Develop a written program, before employees enter, that describes the means, procedures, and practices you use for the safe entry of permit-required confined spaces as required by this chapter. Include the following when applicable to your confined space entry program:

– Documentation of permit entry procedures.

– Documentation used for alternate entry procedures.

– How to reclassify permit-required confined spaces to nonpermit spaces.

– Designation of employee roles, such as entrants, attendants, entry supervisors, rescuers, or those who test or monitor the atmosphere in a permit-required space.

– Identification of designated employee duties.

– Training employees on their designated roles.

– How to identify and evaluate hazards.

– Use and maintenance of equipment.

– How to prevent unauthorized entry.

– How to coordinate entry with another employer.

– How to rescue entrants.

Note: For alternate entry, your written program only needs to meet the requirements of WAC 296-809-400, Employee training, and WAC 296-809-600, Alternate entry procedures, of this chapter.

You must:

• Consult with affected employees and their authorized representatives when developing and implementing all aspects of your permit-required confined space program.

• Make the written program available to employees and their authorized representatives.

• Update your written program as necessary.

Link: You can find a sample permit-required confined space entry program in the user guide located in the resources section of this chapter or by visiting the labor and industries website at http://www.lni.wa.gov/wisha/publications/App.

[Statutory Authority: RCW 49.17.010, 49.17.040, 49.17.050, and 49.17.060. 04-03-081, § 296-809-30002, filed 1/20/04, effective 5/1/04.]

WAC 296-809-30004 Meet these additional requirements if your employees enter another employer's confined space.

You must:

• Obtain any available information about permit-required confined space hazards and entry operations from the host employer.

• Coordinate entry operations with any other employers whose employees will be working in or near the permit-required confined space.

• Inform the host employer, either through a debriefing or during entry operations, about:

– The entry program you will follow; and

– Any hazards you confronted or created in the space during entry operations.

[Statutory Authority: RCW 49.17.010, 49.17.040, 49.17.050, and 49.17.060. 04-03-081, § 296-809-30004, filed 1/20/04, effective 5/1/04.]

EMPLOYEE TRAINING

WAC 296-809-400 Summary.

Your responsibility:

To make sure employees are trained to perform their designated roles safely.

You must:

Provide employee training.

WAC 296-809-40002

Certify employee proficiency.

WAC 296-809-40004

[Statutory Authority: RCW 49.17.010, 49.17.040, 49.17.050, and 49.17.060. 04-03-081, § 296-809-400, filed 1/20/04, effective 5/1/04.]

WAC 296-809-40002 Provide employee training.

You must:

• Provide training to each employee involved in permit-required confined space activities, so they acquire the understanding, knowledge and skills necessary to safely perform assigned duties.

– Establish employee proficiency in their confined space duties.

– Introduce new or revised procedures as necessary.

Note: Employers can determine employee proficiency by:
– Observing employee performance during training exercises that simulate actual confined space conditions.
– A comprehensive written examination; or

– Any other method that is effective for the employer.

You must:

• Provide training at the following times:

– Before an employee is first assigned to duties covered by this chapter.

– Before there is a change in an employee's assigned duties.

– When there is a permit-required confined space hazard for which the employee has not already been trained.

– If you have reason to believe that there are either:

■ Deviations from your procedures for permit-required confined space entry; or

■ Employee knowledge or use of your procedures is inadequate.

[Statutory Authority: RCW 49.17.010, 49.17.040, 49.17.050, and 49.17.060. 04-03-081, § 296-809-40002, filed 1/20/04, effective 5/1/04.]

WAC 296-809-40004 Certify employee proficiency.

You must:

• Certify employee proficiency in their assigned duties.

• Make sure the certification:

– Contains each employee's name, the trainer's written or electronic signature or initials, and the dates of training.

– Is available for inspection by employees and their authorized representatives.

[Statutory Authority: RCW 49.17.010, 49.17.040, 49.17.050, and 49.17.060. 04-03-081, § 296-809-40004, filed 1/20/04, effective 5/1/04.]

PERMIT ENTRY PROCEDURES

WAC 296-809-500 Summary.

Your responsibility:

To establish procedures for the safe permit-required entry of confined spaces.

Implement procedures for entry permits.

WAC 296-809-50002

Use an entry permit that contains all required information.

WAC 296-809-50004

Keep and review your entry permits.

WAC 296-809-50006

Prevent unauthorized entry.

WAC 296-809-50008

Provide, maintain, and use proper equipment.

WAC 296-809-50010

Evaluate and control hazards for safe entry.

WAC 296-809-50012

Make sure you have adequate rescue and emergency services available.

WAC 296-809-50014

Use nonentry rescue systems or methods whenever possible.

WAC 296-809-50016

Make sure entry supervisors perform their responsibilities and duties.

WAC 296-800-50018

Provide an attendant outside the permit-required confined space.

WAC 296-809-50020

Make sure entrants know the hazardous conditions and their duties.

WAC 296-809-50022

Implement procedures for ending entry.

WAC 296-809-50024

[Statutory Authority: RCW 49.17.010, 49.17.040, 49.17.050, and 49.17.060. 04-03-081, § 296-809-500, filed 1/20/04, effective 5/1/04.]

WAC 296-809-50002 Implement procedures for entry permits.

You must:

• Identify and evaluate, before employees enter, potential hazards from:

– The permit-required confined space; and

– The work to be performed.

• Complete an entry permit before entry is authorized, documenting that you have completed the means, procedures and practices necessary for safe entry and work.

• Make sure that entrants or their representatives have an opportunity to observe any monitoring or testing, or any actions to eliminate or control hazards, performed to complete the permit.

• Identify the entry supervisor.

– Make sure the entry supervisor signs the entry permit, authorizing entry, before the space is entered.

• Make the completed permit available to entrants or their authorized representatives at the time of entry.

– Do this by either posting the completed permit at the entry location, or by any other equally effective means.

• Make sure the duration of the permit does not exceed the time required to complete the assigned task or job identified on the permit.

• Note any problems encountered during an entry operation on the permit. Use the information to make appropriate revisions to your program, entry operations, means, systems, procedures and practices.

[Statutory Authority: RCW 49.17.010, 49.17.040, 49.17.050, and 49.17.060. 04-03-081, § 296-809-50002, filed 1/20/04, effective 5/1/04.]

WAC 296-809-50004 Use an entry permit that contains all required information.

You must:

• Make sure your entry permit identifies **all** of the following that apply to your entry operation:

– The space to be entered.

– Purpose of the entry.

– Date and the authorized duration of the entry permit.

– Hazards of the space to be entered.

– Acceptable entry conditions.

– Results of initial and periodic tests performed to evaluate and identify the hazards and conditions of the space, accompanied by the names or initials of the testers and by an indication of when the tests were performed.

– Appropriate measures used before entry to isolate the space, and eliminate or control hazards.

■ Examples of appropriate measures include the lockout or tagging of equipment and procedures for purging, inerting, ventilating, and flushing permit-required confined spaces.

– Names of entrants and current attendants:

■ Other means include the use of rosters or tracking systems as long as the attendant can determine quickly and accurately, for the duration of the permit, which entrants are inside the space.

– The current entry supervisor.

– A space for the signature or initials of the original supervisor authorizing entry.

– Communication procedures for entrants and attendants to maintain contact during the entry.

– Equipment provided for safe entry, such as:

■ Personal protective equipment (PPE).

■ Testing equipment.

■ Communications equipment.

■ Alarm systems.

■ Rescue equipment.

– Rescue and emergency services available, and how to contact them. Include equipment to use, and names and contact information.

– Other information needed for safety in the particular confined space.

– Additional permits issued for work in the space, such as for hot work.

[Statutory Authority: RCW 49.17.010, 49.17.040, 49.17.050, and 49.17.060. 04-03-081, § 296-809-50004, filed 1/20/04, effective 5/1/04.]

WAC 296-809-50006 Keep and review your entry permits.

You must:

• Keep entry permits for at least one year.

• Keep entry permits or other atmospheric monitoring records that show the actual atmosphere an employee entered or worked in, as employee exposure records.

• Review your permit-required confined space entry program as follows:

– Conduct a review when you have any reason to believe your entry program may not protect employees, and revise your program before allowing subsequent entries.

Note: Examples of circumstances requiring the review of your program include the following:
- There is unauthorized entry of a permit space.
- A permit space hazard not covered by the permit is found.
- A condition prohibited by the permit occurs.
- An injury or near-miss occurs during entry.
- There is a change in the use or configuration of a permit space.
- An employee complains about the effectiveness of the program.

You must:

– Review canceled entry permits within one year following each entry to evaluate:

■ Your permit-required confined space program.

■ The protection provided to employees entering permit-required confined spaces.

– Update your written permit-required confined space entry program as necessary.

Note: Employers may perform a single annual review covering all entries performed during a twelve-month period. If no entry is performed during a twelve-month period, no review is necessary.

Reference: Keep employee exposure records according to chapter 296-62 WAC, Part B, Access to records.

[Statutory Authority: RCW 49.17.010, 49.17.040, 49.17.050, and 49.17.060. 04-03-081, § 296-809-50006, filed 1/20/04, effective 5/1/04.]

WAC 296-809-50008 Prevent unauthorized entry.

You must:

• Implement measures necessary to prevent unauthorized entry into permit-required confined spaces, when conducting authorized entry.

Note:
- When removing entrance covers to open the confined space, protect entrants and those outside the confined space from hazards.
- Examples of measures to prevent unauthorized entry are signs, barricades, warning tape, and an attendant.

[Statutory Authority: RCW 49.17.010, 49.17.040, 49.17.050, and 49.17.060. 04-03-081, § 296-809-50008, filed 1/20/04, effective 5/1/04.]

WAC 296-809-50010 Provide, maintain, and use proper equipment.

You must:

• Provide the equipment in Table 2, when needed and at no cost to employees.

• Make sure that employees use provided equipment properly.

• Maintain the provided equipment.

Table 2
Equipment Provided to Employees at No Cost

Type of equipment	For
Testing and monitoring equipment	Evaluating permit-required confined space conditions
Ventilating equipment	Obtaining and maintaining acceptable entry conditions
Communication equipment	Effective communication between the attendant and the entrants and to initiate rescue when required
Personal protective equipment (PPE)	Protecting employees from hazards of the space or the work performed
Lighting equipment	Employees to see well enough to work safely and to exit the space quickly in an emergency
Barriers or shields, such as pedestrian, vehicle or other barriers	Protecting employees from hazards outside of the space
Ladders	Safe entry and exit by entrants
Rescue and emergency equipment, except for equipment provided by the rescue service provider	Safe and effective rescue
Any other equipment	Safe entry into and rescue from permit-required confined spaces

[Statutory Authority: RCW 49.17.010, 49.17.040, 49.17.050, and 49.17.060. 04-03-081, § 296-809-50010, filed 1/20/04, effective 5/1/04.]

WAC 296-809-50012 Evaluate and control hazards for safe entry.

• Evaluate and control hazards for safe entry into permit-required confined spaces by doing all the following:

– Test for atmospheric hazards, in this order:

■ Oxygen.

■ Combustible gases and vapors.

■ Toxic gases and vapors.

– Provide each entrant or their authorized representative an opportunity to observe any of the following:

■ Preentry testing.

■ Subsequent testing.

■ Monitoring of permit-required spaces.

– Reevaluate the permit-required space in the presence of any entrant, or their authorized representative, who requests this to be done because they have reason to believe that the evaluation of that space may not have been adequate.

– Upon request, immediately provide each entrant or their authorized representative, with the results of any testing required by this rule.

– Continuously monitor conditions in areas where entrants are working, when isolation of the space is not feasible.

• Examples would be a large space or space that is part of a continuous system, such as a sewer.

• Evaluate space conditions during entry as follows:

Table 3
Evaluating Space Conditions

You must:	In order to
Test conditions before entry	Determine that acceptable entry conditions exist before entry is authorized by the entry supervisor
Test or evaluate space conditions during entry	Determine that acceptable entry conditions are being maintained during entry operations
Evaluate entry operations	Make sure entrants of more than one employer working at the same time in or around a permit-required confined space, do not endanger each other

IMPORTANT:

This section applies to both:

– Employers whose employees use permit entry procedures; and

– Employers who provide rescue services.

[Statutory Authority: RCW 49.17.010, 49.17.040, 49.17.050, and 49.17.060. 04-03-081, § 296-809-50012, filed 1/20/04, effective 5/1/04.]

WAC 296-809-50014 Make sure you have adequate rescue and emergency services available.

You must:

(1) Make sure you have adequate rescue and emergency services available during your permit-required confined space entry operations.

• Evaluate and select rescue teams or services who can:

– Respond to a rescue call in a timely manner. Timeliness is based on the identified hazards. Rescuers must have the capability to reach potential victims within an appropriate time frame based on the identified permit space hazards.

– Proficiently rescue employees from a permit-required confined space in your workplace. Rescuers must have the appropriate equipment for the type of rescue.

• Make sure that at least one member of the rescue team or service holds a current certification in first aid and cardiopulmonary resuscitation (CPR).

• Inform each rescue team or service about the hazards they may confront when called to perform rescue.

• Provide the rescue team or service with access to all permit spaces from which rescue may be necessary.

– This will allow them to develop appropriate rescue plans and to practice rescue operations.

Note: What will be considered timely will vary according to the specific hazards involved in each entry. For example, chapter 296-842 WAC, Respirators, requires that employers provide a standby person or persons capable of immediate action to rescue employee(s) for work areas considered to contain an IDLH atmosphere.

You must:

(2) Provide employees, assigned to provide permit-required confined space rescue and emergency services, with:

• Personal protective equipment (PPE) needed for safe entry.

• Other equipment required to conduct rescues safely.

• Training so they are:

– Proficient in the use of the PPE and other equipment.

– Proficient as an entrant of permit-required confined spaces.

– Able to safely perform assigned rescue and emergency duties.

– Knowledgeable in basic first aid and cardiopulmonary resuscitation (CPR).

• Practice sessions for permit-required confined space rescues **at least** once every twelve months where dummies, manikins, or actual persons are removed from either:

– The actual permit spaces; or

– Representative permit spaces that simulate the opening size, configuration, and accessibility, of permit spaces where rescue will be performed.

(3) Establish procedures for:

• Contacting rescue and emergency services.

• Rescuing entrants from permit-required confined spaces.

• Providing necessary emergency services to rescued entrants.

• Preventing unauthorized persons from attempting a rescue.

[Statutory Authority: RCW 49.17.010, 49.17.040, 49.17.050, and 49.17.060. 04-03-081, § 296-809-50014, filed 1/20/04, effective 5/1/04.]

WAC 296-809-50016 Use nonentry rescue systems or methods whenever possible.

You must:

• Use nonentry retrieval systems or methods to rescue entrants in a permit-required confined space unless this:

– Would increase the overall risk of injury to entrants; or

– Would not contribute to the rescue of the entrant.

• Make sure each entrant uses a chest or full-body harness, with a retrieval line attached to the harness at one of the following locations:

– At the center of the employee's back, near shoulder level.

– Above the employee's head.

– At another point which presents a profile small enough for the successful removal of the employee.

• Attach the retrieval line to a mechanical device or fixed point outside the space, so rescue can begin as soon as necessary.

• Make sure a mechanical device is available to retrieve entrants from vertical spaces more than five feet (1.52 m) deep.

Note: When you can demonstrate that the use of a chest or full-body harness is not feasible or creates a greater hazard, then you may use wristlets or another method shown to be the safest and most effective alternative.

[Statutory Authority: RCW 49.17.010, 49.17.040, 49.17.050, and 49.17.060. 04-03-081, § 296-809-50016, filed 1/20/04, effective 5/1/04.]

WAC 296-809-50018 Make sure entry supervisors perform their responsibilities and duties.

You must:

• Make sure that an entry supervisor:

– Authorizes the entry into a permit-required confined space by signing the entry permit.

– Oversees entry operations.

– Knows about the hazards that may be faced during entry, including the mode, signs or symptoms, and consequences of the exposure.

– Verifies and checks **all** of the following:

■ The appropriate entries have been made on the permit.

■ All tests specified by the permit have been conducted.

■ All procedures and equipment specified by the permit are in place before approving the permit and allowing entry to the space.

– Terminates the entry and cancels the permit when:

■ The assigned task or job has been completed.

■ A condition in the space that is not covered by the entry permit is discovered.

– Verifies that rescue services are available and that there is a way to contact them.

– Removes unauthorized individuals who enter or attempt to enter the permit-required confined space during entry operations.

– Determines that entry operations remain consistent with the terms of the entry permit and acceptable entry conditions are maintained:

■ Whenever responsibility for a permit-required space entry operation is transferred; and

■ At regular intervals dictated by the hazards and operations performed within the space.

Note:
- Make sure entry supervisors have the required knowledge and proficiency to perform the job duties and responsibilities required by this chapter.
- The entry supervisor may also perform other duties under this chapter, such as attendant or entrant, if they are trained and proficient in those duties.
- The responsibility of the entry supervisor may be passed from one supervisor to another during an entry operation.

[Statutory Authority: RCW 49.17.010, 49.17.040, 49.17.050, and 49.17.060. 04-03-081, § 296-809-50018, filed 1/20/04, effective 5/1/04.]

WAC 296-809-50020 Provide an attendant outside the permit-required confined space.

IMPORTANT:

• The number of attendants assigned should be tailored to the requirements of the space and the work performed.

• You need to assess if it is appropriate or possible to have multiple permit spaces monitored by a single attendant, or have an attendant stationed at a location outside each space. Video cameras and radios are examples of tools that may assist an attendant monitoring more than one space.

• Attendants may be stationed at any location outside the permit-required confined space if the duties described in this section can be effectively performed for each space that is monitored.

You must:

• Provide at least one attendant outside the permit-required confined space during entry operations.

• Make sure each permit-required confined space attendant:

– Understands the hazards that may be faced during entry, including the mode, signs or symptoms, and results of exposure to the hazards.

– Is aware of the behavioral effects of exposure to the hazard.

– Continuously maintains an accurate count of entrants in the space.

– Maintains an accurate record of who is in the permit-required confined space.

– Communicates with entrants as necessary to monitor their status or alert them of the need to evacuate the space.

– Monitors activities inside and outside the space to determine if it is safe for entrants to remain in the space.

– Orders entrants to evacuate the space immediately if **any** of the following conditions occur:

■ A prohibited condition.

■ The behavioral effects of hazardous exposure in an entrant.

■ A situation outside the space that could endanger entrants.

■ The attendant cannot effectively and safely perform all the duties required in this chapter.

– Takes the following actions when unauthorized persons approach or enter a space:

■ Warn unauthorized persons to stay away from the space.

■ Tells the unauthorized persons to exit immediately if they have entered the space.

■ Informs entrants and the entry supervisor if unauthorized persons have entered the space.

– Performs nonentry rescues as specified by your rescue procedure.

– Has the means to respond to an emergency affecting one or more of the permit spaces being monitored without preventing performance of the attendant's duties to the other spaces being monitored.

– Carries out no duties that might interfere with their primary duty to monitor and protect the entrants.

– Calls for rescue and other emergency services as soon as entrants may need assistance to escape from the space.

– Monitors entry operations until relieved by another attendant or all entrants are out of the space.

[Statutory Authority: RCW 49.17.010, 49.17.040, 49.17.050, and 49.17.060. 04-03-081, § 296-809-50020, filed 1/20/04, effective 5/1/04.]

WAC 296-809-50022 Make sure entrants know the hazardous conditions and their duties.

You must:

• Make sure that all entrants:

– Know the hazards they may face during entry, including the mode, signs or symptoms, and results of exposure to the hazards.

– Use equipment properly.

– Communicate with the attendant as necessary so the attendant can:

■ Monitor entrant status.

■ Alert entrants of the need to evacuate.

– Alert the attendant whenever either of these situations exist:

■ A warning sign or symptom of exposure to a dangerous situation such as, behavioral changes, euphoria, giddiness potentially from lack of oxygen or exposure to solvents.

■ A prohibited condition.

– Exit from the permit-required confined space as quickly as possible when one of the following occurs:

■ The attendant or entry supervisor gives an order to evacuate.

■ The entrant recognizes any warning sign or symptom of exposure to a dangerous situation.

■ The entrant detects a prohibited condition.

■ An evacuation alarm is activated.

[Statutory Authority: RCW 49.17.010, 49.17.040, 49.17.050, and 49.17.060. 04-03-081, § 296-809-50022, filed 1/20/04, effective 5/1/04.]

WAC 296-809-50024 Implement procedures for ending entry.

You must:

• Make sure you terminate the entry when entry operations are completed, including securing an entrance cover and canceling the permit.

[Statutory Authority: RCW 49.17.010, 49.17.040, 49.17.050, and 49.17.060. 04-03-081, § 296-809-50024, filed 1/20/04, effective 5/1/04.]

WAC 296-809-600 Alternate entry procedures.

Summary:

Your responsibility:

To choose alternate entry procedures for spaces where the only hazard is a hazardous atmosphere.

IMPORTANT:

In addition to this section, you also need to meet the requirements in the following sections of this chapter:

– WAC 296-809-200, Identifying and controlling permit-required confined spaces.

– WAC 296-809-300, Permit-required confined space program.

– WAC 296-809-400, Employee training.

You must:

Make sure the following conditions are met if using alternate entry procedures.

WAC 296-809-60002

Follow these alternate entry procedures for permit-required confined spaces.

WAC 296-809-60004

[Statutory Authority: RCW 49.17.010, 49.17.040, 49.17.050, and 49.17.060. 04-03-081, § 296-809-600, filed 1/20/04, effective 5/1/04.]

WAC 296-809-60002 Make sure the following conditions are met if using alternate entry procedures.

You must:

• Make sure, when using alternate entry procedures, instead of permit entry procedures, that you have monitoring and inspection data that supports the following:

■ That the only hazard of the permit-required confined space is an actual or potentially hazardous atmosphere.

■ That continuous forced air ventilation alone is all that is needed to maintain the permit-required confined space for safe entry.

• Make sure an entry to obtain monitoring and inspection data or to eliminate hazards is performed according to WAC 296-809-500, Permit entry procedures.

• Make sure all documentation produced is available to each affected employee and their authorized representative.

[Statutory Authority: RCW 49.17.010, 49.17.040, 49.17.050, and 49.17.060. 04-03-081, § 296-809-60002, filed 1/20/04, effective 5/1/04.]

WAC 296-809-60004 Follow these alternate entry procedures for permit-required confined spaces.

You must:

• Use the following alternate entry procedures:

– Eliminate any unsafe conditions before removing an entrance cover.

■ When entrance covers are removed, promptly guard the opening with a railing, temporary cover, or other temporary barrier to prevent accidental falls through the opening and protect entrants from objects falling into the space.

■ Certify that preentry measures have been taken (such as safe removal of the cover and having protection needed to gather preentry data), with the date, location of the space, and signature of the person certifying.

■ Make the preentry certification available before entry to each entrant.

– Before an employee enters the confined space, test the internal atmosphere with a calibrated, direct-reading instrument for all of the following, in this order:

■ Oxygen content.

■ Flammable gases and vapors.

■ Potential toxic air contaminants.

– Provide entrants, or their authorized representatives, with an opportunity to observe the preentry and periodic testing.

– Make sure the atmosphere within the space is not hazardous when entrants are present.

– Use continuous forced air ventilation, as follows:

■ Wait until the forced air ventilation has removed any hazardous atmosphere before allowing entrants into the space.

■ Direct forced air ventilation toward the immediate areas where employees are, or will be, and continue ventilation until all employees have left the space.

■ Provide the air supply from a clean source and make sure it does not increase hazards in the space.

– Test the atmosphere within the space as needed to make sure hazards do not accumulate.

– If a hazardous atmosphere is detected during entry, do all of the following:

■ Evacuate employees from the space immediately.

■ Evaluate the space to determine how the hazardous atmosphere developed.

■ Implement measures to protect employees from the hazardous atmosphere before continuing the entry operation.

■ Verify the space is safe for entry before continuing the entry operation.

[Statutory Authority: RCW 49.17.010, 49.17.040, 49.17.050, and 49.17.060. 04-03-081, § 296-809-60004, filed 1/20/04, effective 5/1/04.]

WAC 296-809-700 Nonpermit confined spaces requirements.

Summary:

Your responsibility:

To make sure any space you classify as nonpermit, does not have the potential to contain serious health or safety hazards.

You must:

Follow these requirements when classifying a confined space as a nonpermit confined space.

WAC 296-809-70002

Reevaluate nonpermit confined spaces if hazards develop.

WAC 296-809-70004

IMPORTANT:

A confined space may be classified as a nonpermit confined space for as long as the hazards remain eliminated. Once a hazard is present, you must follow all requirements of this chapter that apply.

[Statutory Authority: RCW 49.17.010, 49.17.040, 49.17.050, and 49.17.060. 04-03-081, § 296-809-700, filed 1/20/04, effective 5/1/04.]

WAC 296-809-70002 Follow these requirements when classifying a confined space as a nonpermit confined space.

You must:

• Make sure the confined space meets these conditions to be classified as nonpermit confined spaces:

– The confined space does not contain an actual or potential hazardous atmosphere.

– The confined space does not contain hazards capable of causing death or serious physical harm. This includes any recognized health or safety hazards including engulfment in solid or liquid material, electrical shock, or moving parts.

– If you must enter to remove hazards, the space must be treated as a permit-required confined space until hazards have been eliminated.

Note:
- Controlling atmospheric hazards through forced air ventilation does not eliminate the hazards.
- You should evaluate the use of lockout-tagout, as covered in WAC 296-24-110, to determine if using it fully eliminates the hazard.
- You are allowed to use alternate entry procedures covered in WAC 296-809-600, if you can demonstrate that forced air ventilation alone will control all hazards in the space.

You must:

• Document how you determined the confined space contained no permit-required confined space hazards. Certify this documentation with the following:

– Date.

– Location of the space.

– Signature of the person making the determination.

• Make the certification available to each entrant, or their authorized representative.

Note: This certification must be completed every time a permit-required confined space is reclassified as a nonpermit space.

[Statutory Authority: RCW 49.17.010, 49.17.040, 49.17.050, and 49.17.060. 04-03-081, § 296-809-70002, filed 1/20/04, effective 5/1/04.]

WAC 296-809-70004 Reevaluate nonpermit confined spaces if hazards develop.

You must:

• Reclassify a nonpermit confined space to a permit-required confined space, if necessary, when changes in the use or configuration of the space increase the hazards to entrants.

• Make sure all employees exit the space if hazards develop. You must then reevaluate the space and determine whether it must be reclassified as a permit-required confined space.

[Statutory Authority: RCW 49.17.010, 49.17.040, 49.17.050, and 49.17.060. 04-03-081, § 296-809-70004, filed 1/20/04, effective 5/1/04.]

WAC 296-809-800 Definitions.

Acceptable entry conditions:

The conditions that must exist in a permit-required confined space to allow safe entry and work.

Attendant:

An individual stationed outside one or more permit-required confined spaces to monitor the entrants.

Blanking or blinding:

The absolute closure of a pipe, line, or duct by fastening a solid plate (such as a spectacle blind or a skillet blind) that completely covers the bore. It is capable of withstanding the maximum pressure of the pipe, line, or duct with no leakage beyond the plate.

Confined space:

A space that is **all** of the following:

– Large enough and arranged so an employee could fully enter the space and work.

– Has limited or restricted entry or exit. Examples of spaces with limited or restricted entry are tanks, vessels, silos, storage bins, hoppers, vaults, excavations, and pits.

– Not primarily designed for human occupancy.

Double block and bleed:

The closure of a line, duct, or pipe by closing and locking or tagging two in-line valves and by opening and locking or tagging a drain or vent valve in the line between the two closed valves.

Emergency:

Any occurrence (including any failure of hazard control or monitoring equipment) or event internal or external to the permit-required confined space that could endanger authorized entrants.

Engulfment:

The surrounding capture of a person by a liquid or finely divided (flowable) solid substance that can be inhaled to cause death by filling or plugging the respiratory system or that can exert enough force on the body to cause death by strangulation, constriction, or crushing.

Enter (entry):

The action by which a person passes through an opening into a permit-required confined space and includes work activities in that space. Entry is considered to have occurred as soon as any part of the entrant's body breaks the plane of an opening into the space.

Note: If the opening is large enough for the worker to fully enter the space, a permit is required even for partial body entry. Permits are not required for partial body entry where the opening is not large enough for full entry, although other rules such as lockout-tagout, WAC 296-24-110 or respiratory hazards, chapter 296-841 WAC may apply.

Entrant:

An employee who is authorized by the employer to enter a permit-required confined space.

Entry permit (permit):

The written or printed document that is provided by you to allow and control entry into a permit-required confined space and that contains the information required in WAC 296-809-500, Permit entry procedures.

Entry supervisor:

The person (such as the employer, crew leader, or crew chief) responsible for:

– Determining if acceptable entry conditions are present at a permit-required confined space where entry is planned;

– Authorizing entry and overseeing entry operations; and

– Terminating entry as required.

Hazardous atmosphere:

An atmosphere that may expose employees to the risk of death, incapacitation, impairment of ability to self-rescue (that is, escape unaided from a permit-required confined space), injury, or acute illness caused by one or more of the following:

– Flammable gas, vapor, or mist in excess of ten percent of its lower flammable limit (LFL).

– Airborne combustible dust at a concentration that meets or exceeds its LFL.

Note: This concentration may be approximated as a condition in which the dust obscures vision at a distance of five feet (1.52 m) or less.

– Atmospheric oxygen concentration below 19.5 percent or above 23.5 percent.

– Atmospheric concentration of any substance which may exceed a permissible exposure limit. For additional information about atmospheric concentration, see chapter 296-62 WAC, Parts F, G, and I, General occupational health standards and chapter 296-841 WAC, Respiratory hazards.

Note: An airborne concentration of a substance that is not capable of causing death, incapacitation, impairment of ability to self-rescue, injury, or acute illness due to its health effects is not covered by this definition.

– Any other atmospheric condition that is immediately dangerous to life or health.

Note: You can find guidance on establishing acceptable atmospheric conditions for air contaminants, which have no WISHA-determined doses or permissible exposure limits using other sources of information, such as:

- Material safety data sheets required by WAC 296-800-170, Employer chemical hazard communication.
- Published information.
- Internal documents.

Hot work permit:

A written authorization to perform operations, for example, riveting, welding, cutting, burning, and heating, that can provide a source of ignition.

Immediately dangerous to life or health (IDLH):

Any of the following conditions:

– An immediate or delayed threat to life.

– Anything that would cause irreversible adverse health effects.

– Anything that would interfere with an individual's ability to escape unaided from a permit-required confined space.

Note: Some materials - hydrogen fluoride gas and cadmium vapor, for example - may produce immediate transient effects that, even if severe, may pass without medical attention, but are followed by sudden, possibly fatal collapse twelve to seventy-two hours after exposure. The victim "feels normal" after recovery from transient effects until collapse. Such materials in hazardous quantities are considered to be "immediately" dangerous to life or health (IDLH).

Inerting:

The displacement of the atmosphere in a permit-required confined space by a noncombustible gas (such as nitrogen) to such an extent that the resulting atmosphere is noncombustible.

Note: This procedure produces an IDLH oxygen-deficient atmosphere.

Isolation:

The process by which a permit-required confined space is removed from service and completely protected against the release of energy and material into the space by such means as: Blanking or blinding; misaligning or removing sections of lines, pipes, or ducts; a double block and bleed system; lockout or tagout of all sources of energy; or blocking or disconnecting all mechanical linkages.

Line breaking:

The intentional opening of a pipe, line, or duct that is or has been carrying flammable, corrosive, or toxic material, an inert gas, or any fluid at a volume, pressure, or temperature capable of causing injury.

Nonpermit confined space:

A confined space that does NOT contain actual hazards or potential hazards capable of causing death or serious physical harm.

Oxygen deficient atmosphere:

An atmosphere containing less than 19.5 percent oxygen by volume.

Oxygen enriched atmosphere:

An atmosphere containing more than 23.5 percent oxygen by volume.

Permit-required confined space or permit space:

A confined space that has one or more of the following characteristics capable of causing death or serious physical harm:

– Contains or has a potential to contain a hazardous atmosphere.

– Contains a material with the potential for engulfing someone who enters.

– Has an internal configuration that could allow someone entering to be trapped or asphyxiated by inwardly converging walls or by a floor, which slopes downward and tapers to a smaller cross section.

– Contains any physical hazard. This includes any recognized health or safety hazards including engulfment in solid or liquid material, electrical shock, or moving parts.

– Contains any other recognized serious safety or health hazard that could either:

– Impair the ability to self-rescue; or

– Result in a situation that presents an immediate danger to life or health.

Permit-required confined space program:

An overall program for:

– Controlling and appropriately protecting employees from permit-required confined space hazards; and

– Regulating employee entry into permit-required confined spaces.

Prohibited condition:

Any condition in a permit-required confined space that is not allowed by the permit during the authorized entry period.

Rescue service:

The personnel designated to rescue employees from permit-required confined spaces.

Retrieval system:

The equipment used for nonentry rescue of persons from permit-required confined spaces, such as a retrieval line, full-body harness or wristlets, and a lifting device or anchor.

Testing:

The process of identifying and evaluating the hazards that entrants may be exposed to in a permit-required confined space. Testing includes specifying the tests that are to be performed in the permit-required confined space.

Note: Testing allows employers to devise and implement adequate controls to protect entrants during entry, and to determine if acceptable entry conditions are present.

[Statutory Authority: RCW 49.17.010, 49.17.040, 49.17.050, and 49.17.060. 04-03-081, § 296-809-800, filed 1/20/04, effective 5/1/04.]

Chapter 296-816 WAC
PROTECTING TRADE SECRETS

WAC

296-816-100	Scope.
296-816-200	Protecting trade secrets.
296-816-20005	Indicate when trade secret information has been withheld.
296-816-20010	Provide trade secret information in a medical emergency.
296-816-20015	Respond to requests for trade secret information in nonemergency situations.
296-816-20020	Provide trade secret information when requested by WISHA.
296-816-300	Definitions.

WAC 296-816-100 Scope. This chapter applies to both:

• Withholding trade secret information from material safety data sheets (MSDSs) and employee exposure records;

AND

• Providing trade secret information in medical emergencies and nonemergency situations.

Definition:

Trade secrets: Any confidential information that is used in an employer's business and gives an opportunity to gain an advantage over competitors who do not know or use it. It can be a:

• Formula.

• Pattern.

• Process.

• Device.

• Information.

• Collection of information.

[Statutory Authority: RCW 49.17.010, 49.17.040, 49.17.050, and 49.17.060. 04-14-026, § 296-816-100, filed 6/29/04, effective 9/1/04.]

WAC 296-816-200 Protecting trade secrets.

Your responsibility:

To meet requirements that apply to your workplace when withholding or providing trade secret information.

You must:

WAC 296-816-20005

Indicate when trade secret information has been withheld.

WAC 296-816-20010

Provide trade secret information in a medical emergency.

WAC 296-816-20015

Provide trade secret information in nonemergency situations.

WAC 296-816-20020

Provide trade secret information when requested by WISHA.

[Statutory Authority: RCW 49.17.010, 49.17.040, 49.17.050, and 49.17.060. 04-14-026, § 296-816-200, filed 6/29/04, effective 9/1/04.]

WAC 296-816-20005 Indicate when trade secret information has been withheld.

You must:

• Indicate clearly in the MSDS or employee exposure records that trade secret information has been withheld.

[Statutory Authority: RCW 49.17.010, 49.17.040, 49.17.050, and 49.17.060. 04-14-026, § 296-816-20005, filed 6/29/04, effective 9/1/04.]

WAC 296-816-20010 Provide trade secret information in a medical emergency.

You must:

• Immediately provide the specific chemical identity to the treating physician or nurse when **they determine:**

– That a medical emergency exists;

AND

– The specific chemical identity is necessary to treat the employee involved in the medical emergency.

Note:
• You may require a written statement of need and confidentiality agreement from the treating physician or nurse receiving the trade secret information as soon as circumstances of the medical emergency permit.
• If the health care professional receiving the trade secret information decides that there is a need to disclose it to WISHA, they need to inform you prior to, or at the same time as, disclosure being made to WISHA.

[Statutory Authority: RCW 49.17.010, 49.17.040, 49.17.050, and 49.17.060. 04-14-026, § 296-816-20010, filed 6/29/04, effective 9/1/04.]

WAC 296-816-20015 Respond to requests for trade secret information in nonemergency situations.

You must:

• Provide specific chemical identity information in nonemergency situations when a written request by a health professional, employee, or designated representative, includes the following:

– Details showing that the specific chemical identity is needed for one or more of the following occupational health reasons:

■ Assessing the hazards of the chemicals employees will be exposed to.

■ Conducting or assessing sampling of the workplace atmosphere to determine employee exposure levels.

■ Conducting medical surveillance of exposed employees.

■ Providing medical treatment to exposed employees.

■ Selecting or assessing personal protective equipment for exposed employees.

■ Designing or assessing engineering controls or other protective measures.

■ Conducting studies to determine the health effects of exposure.

– Details showing why the following alternative information **does not** meet the needs of the requestor:

■ The properties and effects of the chemical.

■ Measures for controlling employees' exposure to the chemical.

■ Methods of monitoring and analyzing employee exposure to the chemical.

■ Methods of diagnosing and treating harmful exposures to the chemical.

– The procedures that will be used to keep the information confidential.

– A written confidentiality agreement that says:

■ The information will not be used for anything other than the stated health needs.

■ The information will not be released to anyone else, except according to the terms of the agreement or to WISHA.

Note: • If the health care professional, employee, or designated representative receiving the trade secret information decides that there is a need to disclose it to WISHA, they need to inform you prior to, or at the same time as, disclosure being made to WISHA.

You must:

• Meet all the following requirements if you decide not to provide the requested trade secret information:

– Provide a written denial within thirty days that includes the following information:

■ The reasons for denying the request.

■ Evidence that the requested information is a trade secret.

■ A detailed explanation of how alternative information may satisfy the requesting party's needs without revealing any specific chemical identity.

– Provide alternative information that allows the requesting party to identify where and when an exposure occurred, if trade secret information was deleted.

– Make available all other information about the properties and effects of the specific chemical.

Note: • If you deny a request for trade secret information, the requestor may refer the written denial, along with the original request, to WISHA for consideration. WISHA will review the denial and determine if it meets the requirements of this chapter, such as whether:
– It is a bona fide trade secret.
– There is a medical or occupational health need for the information.
– Adequate means are in place to protect the confidentiality of the information.
• WISHA may issue orders or impose additional limitations or conditions on the release of the information to make sure that the occupational health needs are met without risk to you when you show WISHA that a confidentiality agreement will not provide enough protection against harm that could be caused to your business by disclosing a specific chemical identity.

[Statutory Authority: RCW 49.17.010, 49.17.040, 49.17.050, and 49.17.060. 04-14-026, § 296-816-20015, filed 6/29/04, effective 9/1/04.]

WAC 296-816-20020 Provide trade secret information when requested by WISHA.

You must:

• Provide trade secret information to WISHA when requested.

– Make any trade secret claim, including supporting documentation, by the time you provide WISHA with the information.

[Statutory Authority: RCW 49.17.010, 49.17.040, 49.17.050, and 49.17.060. 04-14-026, § 296-816-20020, filed 6/29/04, effective 9/1/04.]

WAC 296-816-300 Definitions.

Designated representative:

• Any individual or organization to which an employee gives written authorization.

• A recognized or certified collective bargaining agent without regard to written employee authorization.

• The legal representative of a deceased or legally incapacitated employee.

Employee exposure record:

A record containing any of the following information:

• Environmental (workplace) monitoring or measuring of a toxic substance or harmful physical agent, including personal, area, grab, wipe, or other form of sampling, as well as related collection and analytical methodologies, calculations, and other background data relevant to interpretation of the results obtained.

• Biological monitoring results which directly assess the absorption of a toxic substance or harmful physical agent by body systems, such as the level of a chemical in the blood, urine, breath, hair, or fingernails, but not including results which assess the biological effect of a substance or agent or which assess an employee's use of alcohol or drugs.

• Material safety data sheets (MSDSs) indicating that the material may pose a hazard to human health;

OR

• In the absence of the above:

– A chemical inventory or any other record that reveals where and when used and the identity (e.g., chemical, common or trade name) of a toxic substance or harmful physical agent.

– Exposure records of other employees with past or present job duties or related working conditions.

Exposure or exposed:

The contact an employee has with a toxic substance, harmful physical agent, or oxygen deficient condition. Exposure can occur through various routes, such as inhalation, ingestion, skin contact, or skin absorption.

Health professional:

A physician, occupational health nurse, industrial hygienist, toxicologist, or epidemiologist, providing medical or other occupational health services to exposed employees.

Record:

Any item, collection, or grouping of information. Examples include:

• Paper document.

• Microfiche.

• Microfilm.

• X-ray film.
• Computer record.

Specific chemical identity:

Any information that reveals the precise chemical designation of the substance, such as:

• Chemical name;

OR

• Chemical abstracts service (CAS) registry number.

Trade secret: Any confidential information that is used in an employer's business and gives an opportunity to gain an advantage over competitors who do not know or use it. It can be a:

• Formula.
• Pattern.
• Process.
• Device.
• Information.
• Collection of information.

[Statutory Authority: RCW 49.17.010, 49.17.040, 49.17.050, and 49.17.060. 04-14-026, § 296-816-300, filed 6/29/04, effective 9/1/04.]

Chapter 296-817 WAC
HEARING LOSS PREVENTION (NOISE)

WAC

296-817-100 Scope.

HEARING LOSS PREVENTION PROGRAM

296-817-200 Summary.
296-817-20005 Conduct employee noise exposure monitoring.
296-817-20010 Control employee noise exposures that equal or exceed 90 dBA TWA_8.
296-817-20015 Make sure employees use hearing protection when their noise exposure equals or exceeds 85 dBA TWA_8.
296-817-20020 Make sure exposed employees receive training about noise and hearing protection.
296-817-20025 Make sure warning signs are posted for areas where noise levels equal or exceed 115 dBA.
296-817-20030 Arrange for oversight of audiometric testing.
296-817-20035 Identify and correct deficiencies in your hearing loss prevention program.
296-817-20040 Document your hearing loss prevention activities.

NOISE MEASUREMENT AND COMPUTATION

296-817-300 Summary.
296-817-30005 Make sure that noise-measuring equipment meets recognized standards.
296-817-30010 Measure employee noise exposure.
296-817-30015 Use these equations when estimating full-day noise exposure from sound level measurements.

AUDIOMETRIC TESTING

296-817-400 Summary.
296-817-40005 Provide audiometric testing at no cost to employees.
296-817-40010 Establish a baseline audiogram for each exposed employee.
296-817-40015 Conduct annual audiograms.
296-817-40020 Review audiograms that indicate a standard threshold shift.
296-817-40025 Keep the baseline audiogram without revision, unless annual audiograms indicate a persistent threshold shift or a significant improvement in hearing.
296-817-40030 Make sure a record is kept of audiometric tests.
296-817-40035 Make sure audiometric testing equipment meets these requirements.

OPTIONS TO AUDIOMETRIC TESTING

296-817-500 Summary.
296-817-50005 Conduct hearing protection audits at least quarterly.
296-817-50010 Make sure staff conducting audits are properly trained.
296-817-50015 Assess the hearing protection used by each employee during audits.
296-817-50020 Document your hearing protection audits.

THIRD-PARTY AUDIOMETRIC TESTS

296-817-50025 Make sure third-party hearing loss prevention programs meet the following requirements.
296-817-600 Noise definitions.

WAC 296-817-100 Scope.

The purpose of this chapter is to:

• Prevent employee hearing loss by minimizing employee noise exposures

AND

• Make sure employees exposed to noise are protected.

These goals are accomplished by:

• Measuring and computing the employee noise exposure from all equipment and machinery in the workplace, as well as any other noise sources in the work area

• Protecting employees from noise exposure by using feasible noise controls

• Making sure employees use hearing protection, if you cannot feasibly control the noise

• Training employees about hearing loss prevention

• Evaluating your hearing loss prevention efforts by tracking employee hearing or periodically reviewing controls and protection

• Making appropriate corrections to your program.

Use Table 1 to help you determine the hearing loss prevention requirements for your workplace:

Table 1
Noise Evaluation Criteria

Criteria	Description	Requirements
85 dBA TWA_8	Full-day employee noise exposure dose. If you have one or more employees whose exposure equals or exceeds this level, you must have a hearing loss prevention program	– Hearing protection – Training – Audiometric testing
90 dBA TWA_8	Full-day employee noise exposure dose. If you have one or more employees whose exposure equals or exceeds this level, you must reduce employee noise exposures in the workplace	– Noise controls **AND** – Hearing protection – Training – Audiometric testing
115 dBA measured using slow response	Extreme noise level (greater than one second in duration)	– Hearing protection – Signs posted in work areas warning of exposure
140 dBC measured using fast response	Extreme impulse or impact noise (less than one second in duration)	Hearing protection

[Statutory Authority: RCW 49.17.010, 49.17.040, 49.17.050, and 49.17.060. 03-11-060, § 296-817-100, filed 5/19/03, effective 8/1/03.]

HEARING LOSS PREVENTION PROGRAM

WAC 296-817-200 Summary.

Your responsibility:

To prevent employee hearing loss by minimizing, and providing protection from, noise exposures.

You must:

Conduct employee noise exposure monitoring

WAC 296-817-20005

Control employee noise exposures that equal or exceed 90 dBA TWA_8

WAC 296-817-20010

Make sure employees use hearing protection when their noise exposure equals or exceed 85 dBA TWA_8

WAC 296-817-20015

Make sure exposed employees receive training about noise and hearing protection

WAC 296-817-20020

Make sure warning signs are posted for areas with noise levels that equal or exceed 115 dBA

WAC 296-817-20025

Arrange for oversight of audiometric testing

WAC 296-817-20030

Identify and correct deficiencies in your hearing loss prevention program

WAC 296-817-20035

Document your hearing loss prevention activities

WAC 296-817-20040.

[Statutory Authority: RCW 49.17.010, 49.17.040, 49.17.050, and 49.17.060. 03-11-060, § 296-817-200, filed 5/19/03, effective 8/1/03.]

WAC 296-817-20005 Conduct employee noise exposure monitoring.

You must:

• Conduct employee noise exposure monitoring to determine the employee's actual exposure when reasonable information indicates that any employee's exposure may equal or exceed 85 dBA TWA_8.

Note:
- Representative monitoring may be used where several employees perform the same tasks in substantially similar conditions
- Examples of information or situations that can indicate exposures which equal or exceed 85 dBA TWA_8, include:
- Noise in the workplace that interferes with people speaking, even at close range
- Information from the manufacturer of equipment you use in the workplace that indicates high noise levels for machines in use
- Reports from employees of ringing in their ears or temporary hearing loss
- Warning signals or alarms that are difficult to hear
- Work near abrasive blasting or jack hammering operations
- Use of tools and equipment such as the following:
  - Heavy equipment or machinery
  - Fuel-powered hand tools
  - Compressed air-driven tools or equipment in frequent use
  - Power saws, grinders or chippers
  - Powder-actuated tools.

You must:

• Follow applicable guidance in WAC 296-817-300 when conducting noise exposure monitoring

• Make sure your sampling for noise exposure monitoring identifies:

– All employees whose exposure equals or exceeds the following:

■ 85 dBA TWA_8 (noise dosimetry, providing an average exposure over an eight-hour time period)

■ 115 dBA (slow response sound level meter, identifying short-term noise exposures)

■ 140 dBC (fast response sound level meter, identifying almost instantaneous noise exposures).

– Exposure levels for selection of hearing protection.

• Provide exposed employees and their representatives with an opportunity to observe any measurements of employee noise exposure that are conducted

• Notify each employee whose exposure equals or exceeds 85 dBA TWA_8 of the monitoring results within five working days of when you receive the results

• Conduct additional noise monitoring whenever a change in production, process, equipment or controls, may reasonably be expected to result in:

– Additional employees whose exposure equals or exceeds 85 dBA TWA_8

– Employees exposed to higher level of noise requiring more effective hearing protection

Note: Conditions that may be expected to increase exposure include:
- Adding machinery to the work area
- Increasing production rates
- Removal or deterioration of noise control devices
- Increased use of noisy equipment
- Change in work schedule
- Change of job duties.

[Statutory Authority: RCW 49.17.010, 49.17.040, 49.17.050, and 49.17.060. 03-11-060, § 296-817-20005, filed 5/19/03, effective 8/1/03.]

WAC 296-817-20010 Control employee noise exposures that equal or exceed 90 dBA TWA_8.

IMPORTANT:

Hearing protection provides a barrier to noise and protects employees but is not considered a control of the noise hazard. Separate requirements apply to hearing protection and are found in WAC 296-817-20015.

You must:

• Reduce employee noise exposure, using feasible controls, wherever exposure equals or exceeds 90 dBA TWA_8.

Note:
- Once noise exposures are brought below 90 dBA TWA_8, no further reduction is required. However, further reduction of noise may reduce the need for other hearing loss prevention requirements
- Controls that eliminate noise at the source or establish a permanent barrier to noise are typically more reliable. For example:
  - Replacing noisy equipment with quiet equipment
  - Using silencers and mufflers
  - Installing enclosures
  - Damping noisy equipment and parts.
- Other controls and work practices may also be useful for reducing noise exposures. Examples include:
  - Employee rotation
  - Limiting use of noisy equipment
  - Rescheduling work.

[Statutory Authority: RCW 49.17.010, 49.17.040, 49.17.050, and 49.17.060. 03-11-060, § 296-817-20010, filed 5/19/03, effective 8/1/03.]

WAC 296-817-20015 Make sure employees use hearing protection when their noise exposure equals or exceeds 85 dBA TWA_8.

You must:

• Make sure employees wear hearing protectors that will provide sufficient protection when exposure equals or exceeds:

– 85 dBA TWA_8 (noise dosimetry, providing an average exposure over an eight-hour time period)

– 115 dBA (slow response sound level meter, identifying short-term noise exposures)

– 140 dBC (fast response sound level meter, identifying almost instantaneous noise exposures).

• Provide employees with an appropriate selection of hearing protectors:

– The selection must include at least two distinct types (such as molded earplugs, foam earplugs, custom-molded earplugs, earcaps, or earmuffs) for each exposed employee and must be sufficient to cover:

■ Different levels of hearing protection needed in order to reduce all employee exposures to a level below 85 dBA TWA_8

■ Different sizes

■ Different working conditions.

– Consider requests of the employees regarding:

■ Physical comfort

■ Environmental conditions

■ Medical needs

■ Communication requirements.

Note: Hearing protector selection should include earplugs, earcaps and earmuffs.

You must:

• Provide hearing protection at no cost to employees

• Supervise employees to make sure that hearing protection is used correctly

• Make sure hearing protectors are:

– Properly chosen for fit

– Replaced as necessary.

• Make sure all hearing protection is sufficient to reduce the employee's equivalent eight-hour noise exposure to 85 dBA or less. When using the A-weighted exposure measurements, reported as "dBA TWA_8," the reduction in noise exposure by hearing protectors is given by Table 2:

Table 2
Effective Protection of Hearing Protectors

Type of hearing protection	Effective protection
Single hearing protection (earplugs, earcaps or earmuffs)	7 dB less than the manufacturer assigned noise reduction rating (NRR); for example, earplugs with an NRR of 20 dB are considered to reduce employee exposures of 95 dBA TWA_8 to 82 dBA TWA_8
Dual hearing protection (earplug and earmuff worn together)	2dB less than the higher NRR of the two protectors; for example, earplugs with an NRR of 20 dB and earmuffs with an NRR of 12 dB are considered to reduce employee exposures of 100 dBA TWA_8 to 82 dBA TWA_8

• In addition to protection based on daily noise dose, make sure hearing protection has an NRR of at least 20 dB when exposures involve noise that equals or exceeds 115 dBA (slow response sound level meter) or 140 dBC (fast response sound level meter).

Note: You may also evaluate hearing protection by using the other methods given in the NIOSH *Compendium of Hearing Protection* (NIOSH Publication No. 95-105). These methods require additional monitoring and are more complex, but provide a more thorough evaluation of protection. This may be useful in cases where communication is critical or for evaluating hearing protection for employees with hearing impairment.

[Statutory Authority: RCW 49.17.010, 49.17.040, 49.17.050, and 49.17.060. 03-11-060, § 296-817-20015, filed 5/19/03, effective 8/1/03.]

WAC 296-817-20020 Make sure exposed employees receive training about noise and hearing protection.

You must:

• Train all employees whose noise exposure equals or exceeds 85 dBA TWA_8

• Provide training when an employee is first assigned to a position involving noise exposure that equals or exceeds 85 dBA TWA_8 **and** at least annually after that

• Update information provided in the training program to be consistent with changes in controls, hearing protectors and work processes

• Make sure your noise and hearing protection training includes:

– The effects of noise on hearing (including both occupational and nonoccupational exposures)

– Noise controls used in your workplace

– The purpose of hearing protectors: The advantages, disadvantages, and attenuation of various types

– Instructions about selecting, fitting, using, and caring for hearing protection

– The purpose and procedures for program evaluation including audiometric testing and hearing protection auditing when you choose to rely upon auditing (see WAC 296-817-500)

– The employees' right to access records kept by the employer.

• Maintain a written program describing initial and refresher training.

[Statutory Authority: RCW 49.17.010, 49.17.040, 49.17.050, and 49.17.060. 03-11-060, § 296-817-20020, filed 5/19/03, effective 8/1/03.]

WAC 296-817-20025 Make sure warning signs are posted for areas where noise levels equal or exceed 115 dBA.

You must:

• Make sure warning signs are posted at the entrances or boundaries of all well-defined work areas where employees may be exposed to noise that equals or exceeds 115 dBA (measured using a sound level meter with slow response).

– Warning signs must clearly indicate that the area is a high noise area and that hearing protectors are required.

[Statutory Authority: RCW 49.17.010, 49.17.040, 49.17.050, and 49.17.060. 03-11-060, § 296-817-20025, filed 5/19/03, effective 8/1/03.]

WAC 296-817-20030 Arrange for oversight of audiometric testing.

You must:

• Make sure audiometric testing as described by WAC 296-817-400 is supervised and reviewed by one of the following licensed or certified individuals:

– An audiologist

– An otolaryngologist

– Another qualified physician.

• Make sure audiograms are conducted by one of the above individuals or by a technician certified by the Council of Accreditation in Occupational Hearing Conservation (CAOHC) and responsible to a qualified reviewer.

[Statutory Authority: RCW 49.17.010, 49.17.040, 49.17.050, and 49.17.060. 03-11-060, § 296-817-20030, filed 5/19/03, effective 8/1/03.]

WAC 296-817-20035 Identify and correct deficiencies in your hearing loss prevention program.

You must:

• Use audiometric testing to identify hearing loss, which may indicate program deficiencies

• Take appropriate actions when deficiencies are found with your program.

– A deficiency may be indicated when:

■ Any employee experiences measurable hearing loss indicated by a standard threshold shift

OR

■ Any employee is not wearing appropriate hearing protection during an audit when auditing is used in place of baseline audiograms for short term employees (see WAC 296-817-500, Option to audiometric testing).

Note: A standard threshold shift or audit deficiency does not necessarily indicate that a significant hearing loss has occurred. These criteria are intended to help identify where there may be flaws in your hearing loss prevention program that can be fixed before permanent hearing loss occurs.
There are additional statistical tools and tests that may be used to improve the effectiveness of your program. Staff conducting audiometric testing and auditing may be able to suggest additional ways to improve your hearing loss prevention program and tailor it to your worksite.

You must:

• Evaluate the following, at a minimum, when responding to a standard threshold shift:

– Employee noise exposure measurements

– Noise controls in the work area

– The selection of hearing protection available and refit employees as necessary

– Employee training on noise and the use of hearing protection and conduct additional training as necessary.

Reference: You may use the option of auditing hearing protection (see WAC 296-817-500) for employees hired or transferred to jobs with noise exposure for less than one year. You may also use audiograms provided by a third-party hearing loss prevention program in some circumstances. Details of these program options are found in WAC 296-817-500, Options to audiometric testing.

[Statutory Authority: RCW 49.17.010, 49.17.040, 49.17.050, and 49.17.060. 03-11-060, § 296-817-20035, filed 5/19/03, effective 8/1/03.]

WAC 296-817-20040 Document your hearing loss prevention activities.

You must:

• Create and retain records documenting noise exposures. Include, at a minimum:

– Exposure measurements required by this chapter for at least two years and for as long as you rely upon them to determine employee exposure

– Audiometric test records for the duration of employment for the affected employees

– Hearing protection audits, if you choose to rely upon them, for the duration of employment of the affected employees.

Note:
- You need to keep as complete a record as possible. Records developed under previous rules or in other jurisdictions need to be kept, even when they do not fulfill the full requirements of this chapter. Similarly, records found to have errors in collection or processing need to be kept if they provide an indication of employee exposure or medical condition not found in other records
- You may want to consider your other business needs, such as worker's compensation claims management, before discarding these records.

Reference: You need to follow additional requirements for records considered employee exposure or medical records. See chapter 296-62 WAC, Part B, Access to records for requirements for access to records, employee rights, and transfer of records.

[Statutory Authority: RCW 49.17.010, 49.17.040, 49.17.050, and 49.17.060. 03-11-060, § 296-817-20040, filed 5/19/03, effective 8/1/03.]

NOISE MEASUREMENT AND COMPUTATION

WAC 296-817-300 Summary.

Your responsibility:

Conduct noise monitoring or measurement to evaluate employee exposures in your workplace.

You must:

Make sure that noise-measuring equipment meets recognized standards

WAC 296-817-30005

Measure employee noise exposure

WAC 296-817-30010

Use these equations when estimating full-day noise exposure from sound level measurements

WAC 296-817-30015.

[Statutory Authority: RCW 49.17.010, 49.17.040, 49.17.050, and 49.17.060. 03-11-060, § 296-817-300, filed 5/19/03, effective 8/1/03.]

WAC 296-817-30005 Make sure that noise-measuring equipment meets recognized standards.

You must:

• Make sure that noise dosimetry equipment meets these specifications:

– Dosimeters must be equipment class 2AS-90/80-5 of the American National Rule Specification for Personal Noise Dosimeters, ANSI S1.25-1991, such dosimeters are normally marked "Type 2."

Note: Make sure any dosimeter you use is Type 2 equipment that:
- Uses slow integration and A-weighting of sound levels.
- Has the **criterion level** set to 90 dB, so the dosimeter will report a constant 8-hour exposure at 90 dBA as a 100% dose.
- Has the **threshold level** set at 80 dB, so the dosimeter will register all noise above 80 dB.
- Uses a 5 dB **exchange rate** for averaging of noise levels over the sample period.

You must:

• Make sure that sound level meters meet these specifications:

– American National Standard Specification for Sound Level Meters, S1.4-1984, Type 2 requirements for sound level meters, such sound level meters are normally marked "Type 2."

■ For continuous noise measurements, the meter must be capable of measuring A-weighted sound levels with slow response

■ For impulse or impact noise measurements, the meter must be capable of indicating maximum C-weighted sound level measurements with fast response.

• Calibrate dosimeters and sound level meters used to monitor employee noise exposure:

– Before and after each day's use

AND

– Following the instrument manufacturer's calibration instructions.

Note:
- You may conduct dosimetry using an exchange rate less than 5 dB and compare the results directly to the noise evaluation criteria in Table 1
- For measuring impulse and impact noise you may also use a sound level meter set to measure maximum impulse C-weighted sound levels or peak C-weighted sound levels.

[Statutory Authority: RCW 49.17.010, 49.17.040, 49.17.050, and 49.17.060. 03-11-060, § 296-817-30005, filed 5/19/03, effective 8/1/03.]

WAC 296-817-30010 Measure employee noise exposure.

IMPORTANT:

A noise dosimeter is the basis for determining total daily noise exposure for employees. However, where you have constant noise levels, you may estimate employee noise exposure using measurements from a sound level meter. Calculation of the employee noise exposure must be consistent with WAC 296-817-30015.

You must:

• Include all:

– Workplace noise from equipment and machinery in use

– Other noise from sources necessary to perform the work

– Noise outside the control of the exposed employees.

• Use a noise dosimeter when necessary to measure employee noise dose

• Use a sound level meter to evaluate continuous and impulse noise levels

• Identify all employees whose exposures equal or exceed the Noise Evaluation Criteria in Table 1:

Table 1
Noise Evaluation Criteria

Criteria	Description	Requirements
85 dBA TWA_8	Full-day employee noise exposure dose. If you have one or more employees whose exposure equals or exceeds this level, you must have a hearing loss prevention program	– Hearing protection – Training – Audiometric testing
90 dBA TWA_8	Full-day employee noise exposure dose. If you have one or more employees whose exposure equals or exceeds this level, you must reduce employee noise exposures in the workplace	Noise controls (in addition to the requirements for 85 dBA TWA_8)
115 dBA measured using slow response	Extreme noise level (greater than one second in duration)	– Hearing protection – Signs posted in work areas warning of exposure
140 dBC measured using fast response	Extreme impulse or impact noise (less than one second in duration)	Hearing protection

[Statutory Authority: RCW 49.17.010, 49.17.040, 49.17.050, and 49.17.060. 03-11-060, § 296-817-30010, filed 5/19/03, effective 8/1/03.]

WAC 296-817-30015 Use these equations when estimating full-day noise exposure from sound level measurements.

You must:

• Compute employee's full-day noise exposure by using the appropriate equations from Table 3 "Noise Dose Computation" **when** using a sound level meter to estimate noise dose.

Table 3
Noise Dose Computation

Description	Equation
Compute the noise dose based on several time periods of constant noise during the shift	The total noise dose over the work day, as a percentage, is given by the following equation where C_n indicates the total time of exposure at a specific noise level, and T_n indicates the reference duration for that level. $D = 100*((C_1/T_1) + (C_2/T_2) +(C_3/T_3) + ... + (C_n/T_n))$
The reference duration is equal to the time of exposure to continuous noise at a specific sound level that will result in a one hundred percent dose	The reference duration, T, for sound level, L, is given in hours by the equation: $T = 8/(2^{((L - 90)/5)})$
Given a noise dose as a percentage, compute the equivalent eight-hour time weighted average noise level	The equivalent eight-hour time weighted average, TWA_8, is computed from the dose, D, by the equation: $TWA_8 = 16.61* Log_{10}(D/100) + 90$

[Statutory Authority: RCW 49.17.010, 49.17.040, 49.17.050, and 49.17.060. 03-11-060, § 296-817-30015, filed 5/19/03, effective 8/1/03.]

AUDIOMETRIC TESTING

WAC 296-817-400 Summary.

Your responsibility:

To conduct audiometric testing of employees exposed to noise to make sure that their hearing protection is effective.

You must:

Provide audiometric testing at no cost to employees

WAC 296-817-40005

Establish a baseline audiogram for each exposed employee

WAC 296-817-40010

Conduct annual audiograms

WAC 296-817-40015

Review audiograms that indicate a standard threshold shift

WAC 296-817-40020

Keep the baseline audiogram without revision, unless annual audiograms indicate a persistent threshold shift or a significant improvement in hearing

WAC 296-817-40025

Make sure a record is kept of audiometric tests

WAC 296-817-40030

Make sure audiometric testing equipment meets these requirements

WAC 296-817-40035.

[Statutory Authority: RCW 49.17.010, 49.17.040, 49.17.050, and 49.17.060. 03-11-060, § 296-817-400, filed 5/19/03, effective 8/1/03.]

WAC 296-817-40005 Provide audiometric testing at no cost to employees.

You must:

• Provide audiograms, including any required travel or necessary additional examinations or testing, at no cost to exposed employees.

[Statutory Authority: RCW 49.17.010, 49.17.040, 49.17.050, and 49.17.060. 03-11-060, § 296-817-40005, filed 5/19/03, effective 8/1/03.]

WAC 296-817-40010 Establish a baseline audiogram for each exposed employee.

You must:

• Conduct a baseline audiogram when an employee is first assigned to work involving noise exposures that equal or exceed 85 dBA TWA_8.

– Make sure this audiogram is completed no more than one hundred eighty days after the employee is first assigned

OR

– Make sure employee is covered by a hearing protection audit program (as described by WAC 296-817-500 and available as an alternative only for employees hired for less than one year).

Note: Employers who utilize mobile test units are allowed up to one year to obtain a valid baseline audiogram for each exposed employee. The employees must still be given training and hearing protection as required by this chapter.

You must:

• Make sure employees are not exposed to workplace noise at least fourteen hours before testing to establish a baseline audiogram.

– Hearing protectors may be used to accomplish this.

• Notify employees of the need to avoid high levels of nonoccupational noise exposure (such as loud music, headphones, guns, power tools, motorcycles, etc.) during the fourteen-hour period immediately preceding the baseline audiometric examination.

[Statutory Authority: RCW 49.17.010, 49.17.040, 49.17.050, and 49.17.060. 03-11-060, § 296-817-40010, filed 5/19/03, effective 8/1/03.]

WAC 296-817-40015 Conduct annual audiograms.

You must:

• Conduct annual audiograms for employees as long as they continue to be exposed to noise that equals or exceeds 85 dBA TWA_8.

Note: Annual audiometric testing may be conducted at any time during the work shift. By conducting the annual audiogram during the work shift with the employee exposed to typical noise for their job, the test may record a temporary threshold shift. This makes the test more sensitive to potential hearing loss and may help you improve employee protection before a permanent threshold shift occurs. A suspected temporary shift is one reason an employer may choose to retest employee hearing.

You must:

• Make sure each employee is informed of the results of his or her audiometric test.

– Include whether or not there has been a hearing level decrease or improvement since their previous test.

• Make sure each employee's annual audiogram is compared to his or her baseline audiogram by an audiologist, otolaryngologist, another qualified physician, or the technician conducting the test to determine if a standard threshold shift has occurred.

– If the annual audiogram indicates that an employee has suffered a standard threshold shift, you may obtain a retest within thirty days and consider the results of the retest as the annual audiogram.

• Make sure that an audiologist, otolaryngologist, or other qualified physician sees any annual audiogram that indicates a standard threshold shift.

[Statutory Authority: RCW 49.17.010, 49.17.040, 49.17.050, and 49.17.060. 03-11-060, § 296-817-40015, filed 5/19/03, effective 8/1/03.]

WAC 296-817-40020 Review audiograms that indicate a standard threshold shift.

You must:

• Make sure the health care professional supervising audiograms has:

– A copy of this chapter

– The baseline audiogram and most recent audiogram of the employee to be evaluated

– Background noise level records for the testing room

– Calibration records for the audiometer.

• Obtain an opinion from the health care professional supervising audiograms as to whether the audiograms indicate possible occupational hearing loss and any recommendations for changes in hearing protection

• Pay for any clinical audiological evaluation or otological examination required by the reviewer, if:

– Additional review is necessary to evaluate the cause of hearing loss

OR

– If there is indication of a medical condition of the ear caused or aggravated by the wearing of hearing protectors.

• Inform the employee in writing of the existence of a standard threshold shift within twenty-one calendar days of the determination.

• Make arrangements for the reviewer to communicate to the employee any suspected medical conditions that are found unrelated to your workplace. This information is confidential and must be handled appropriately.

[Statutory Authority: RCW 49.17.010, 49.17.040, 49.17.050, and 49.17.060. 03-11-060, § 296-817-40020, filed 5/19/03, effective 8/1/03.]

WAC 296-817-40025 Keep the baseline audiogram without revision, unless annual audiograms indicate a persistent threshold shift or a significant improvement in hearing.

You must:

• Keep the baseline audiogram without revision, unless a qualified reviewer determines:

– The standard threshold shift revealed by the audiogram is persistent

OR

– The hearing threshold shown in the annual audiogram indicates significant improvement over the baseline audiogram.

[Statutory Authority: RCW 49.17.010, 49.17.040, 49.17.050, and 49.17.060. 03-11-060, § 296-817-40025, filed 5/19/03, effective 8/1/03.]

WAC 296-817-40030 Make sure a record is kept of audiometric tests.

You must:

• Retain a legible copy of all employee audiograms conducted under this chapter.

– Make sure the record includes:

■ Name and job classification of the employee

■ Date of the audiogram

■ The examiner's name

■ Date of the last acoustic or exhaustive calibration of the audiometer

■ Employee's most recent noise exposure assessment

■ The background sound pressure levels in audiometric test rooms.

[Statutory Authority: RCW 49.17.010, 49.17.040, 49.17.050, and 49.17.060. 03-11-060, § 296-817-40030, filed 5/19/03, effective 8/1/03.]

WAC 296-817-40035 Make sure audiometric testing equipment meets these requirements.

You must:

• Use pure tone, air conduction, hearing threshold examinations, with test frequencies including as a minimum 500, 1000, 2000, 3000, 4000, and 6000 Hz

– Tests at each frequency must be taken separately for each ear

– Supra-aural headphones must be used.

• Conduct audiometric tests with audiometers (including microprocessor audiometers) that meet the specifications of, and are maintained and used according to, American National Standard Specification for Audiometers, S3.6-1996

• Check the functional operation of the audiometer each day before use by doing all of the following:

– Make sure the audiometer's output is free from distorted or unwanted sound

– Test either a person with known, stable hearing thresholds or a bio-acoustic simulator

– Perform acoustic calibration for deviations of 10 dB or greater.

• Audiometer calibration must be checked acoustically at least annually to verify continued conformance with ANSI S3.6-1996. Test frequencies below 500 Hz and above 6000 Hz may be omitted from this check

• An exhaustive calibration must be performed at least every two years according to the American National Standard Specification for Audiometers, S3.6-1996. Test frequencies below 500 Hz and above 6000 Hz may be omitted from the calibration.

• Provide audiometric test rooms that meet the requirements of ANSI S3.1-1999 American National Standard Maximum Permissible Ambient Noise Levels for Audiometric Test Rooms using the following table of maximum ambient sound pressure levels:

Table 4
Maximum Ambient Sound Pressure Levels

Frequency (Hz)	500	1000	2000	4000	8000
Sound Pressure Level (dB)	40	40	47	57	62

Note: The American Industrial Hygiene Association and National Hearing Conservation Association recommend conducting audiograms using the requirements of ANSI S3.1-1999 American National Standard Maximum Permissible Ambient Noise Levels for Audiometric Test Rooms with adjustments at only 500 Hz and below.

[Statutory Authority: RCW 49.17.010, 49.17.040, 49.17.050, and 49.17.060. 03-11-060, § 296-817-40035, filed 5/19/03, effective 8/1/03.]

OPTIONS TO AUDIOMETRIC TESTING

WAC 296-817-500 Summary.

Your responsibility:

This section provides options to baseline audiometric testing for employees assigned to duties with noise exposures for **less than one year.** These program options may also be used to provide added assessment of longer-term employees in addition to audiometric testing.

The requirements of this section apply only if you decide to use auditing or a third-party hearing loss prevention program and do not conduct baseline audiometric testing for those employees.

Hearing Protection Audits

You must:

Conduct hearing protection audits at least quarterly

WAC 296-817-50005

Make sure staff conducting audits are properly trained

WAC 296-817-50010

Assess the hearing protection used by each employee during audits

WAC 296-817-50015

Document your hearing protection audits

WAC 296-817-50020

Third-Party Audiometric Testing

You must:

Make sure third-party hearing loss prevention programs meet the following requirements

WAC 296-817-50025

IMPORTANT:

Hearing protection audits are a tool for use in evaluating your hearing loss prevention program in cases where audiometric testing does not provide a useful measure. For example, if most of your employees are hired on a temporary basis for a few months at a time, audiometric testing may not identify the small changes in hearing acuity that could occur. Auditing provides an alternative to audiometric testing in these cases.

Auditing is not required unless you use it in place of baseline audiometric testing for employees hired for a period of **less than one year** and is permitted as a substitute for audiometric testing only for these employees.

Third-party hearing loss prevention programs are full hearing loss prevention programs and are distinct from audiometric testing provided by third parties as part of your own hearing loss prevention program. These programs may be organized by labor groups, trade associations, labor-management cooperatives, or other organizations to:

• Cover a specific group of employees

OR

• Combine efforts for several employers with common employees.

Although you remain responsible for the program, third-party programs can have at least two benefits over running your own program:

• The audiometric testing is portable between the participating employers so new testing will not be needed when an employee changes employers

• Employees who only work for short periods for any one employer can be monitored under the group program over a longer period of time increasing the effectiveness of the audiometric testing in preventing hearing loss for these employees.

[Statutory Authority: RCW 49.17.010, 49.17.040, 49.17.050, and 49.17.060. 03-11-060, § 296-817-500, filed 5/19/03, effective 8/1/03.]

WAC 296-817-50005 Conduct hearing protection audits at least quarterly.

You must:

• Conduct audits at least quarterly to provide a representative assessment of your workplace

– The assessment is representative if it:

■ Covers all processes and work activities in your business at full production levels

AND

■ Covers all employees present on the audit day.

– If your business is mobile or involves variable processes, auditing may need to be repeated more often than quarterly

– Auditing does not need to be repeated more than monthly as long as a reasonable effort is made to cover:

■ The activities with greatest exposure

AND

■ As many employees as possible.

• Assess exposures and hearing protection for the full shift for each employee covered at the time of the audit.

[Statutory Authority: RCW 49.17.010, 49.17.040, 49.17.050, and 49.17.060. 03-11-060, § 296-817-50005, filed 5/19/03, effective 8/1/03.]

WAC 296-817-50010 Make sure staff conducting audits are properly trained.

You must:

• Make sure staff conducting hearing protection audits:

– Can demonstrate competence in:

■ Evaluating hearing protection attenuation

■ Evaluating hearing protector choices

■ Assessing the correct use of hearing protectors.

– Are certified by the Council for Accreditation in Occupational Hearing Conservation (CAOHC) or have training in the following areas:

■ Noise and hearing loss prevention

■ Washington state noise regulations

■ Hearing protectors

■ Fitting of hearing protectors

■ Basic noise measurement

■ Hearing loss prevention recordkeeping.

[Statutory Authority: RCW 49.17.010, 49.17.040, 49.17.050, and 49.17.060. 03-11-060, § 296-817-50010, filed 5/19/03, effective 8/1/03.]

WAC 296-817-50015 Assess the hearing protection used by each employee during audits.

You must:

• Confirm that:

– Current site conditions during audits are consistent with conditions existing during noise monitoring

– The hearing protection used by the employee is sufficient and appropriate for the conditions

– The hearing protection is worn properly

– The employees are satisfied with the performance and comfort of the hearing protection.

[Statutory Authority: RCW 49.17.010, 49.17.040, 49.17.050, and 49.17.060. 03-11-060, § 296-817-50015, filed 5/19/03, effective 8/1/03.]

WAC 296-817-50020 Document your hearing protection audits.

You must:

• Keep a record of audit results for each employee assessed for the length of their employment and for the length of time you will rely upon the audit results

• Include the following information in the record:

– The make and model of the hearing protectors

– The size of the protectors

– Average noise exposure of the employee

– Any problems found with use of the hearing protection

– Any comments or complaints from the employee regarding the hearing protection.

[Statutory Authority: RCW 49.17.010, 49.17.040, 49.17.050, and 49.17.060. 03-11-060, § 296-817-50020, filed 5/19/03, effective 8/1/03.]

THIRD-PARTY AUDIOMETRIC TESTS

WAC 296-817-50025 Make sure third-party hearing loss prevention programs meet the following requirements.

IMPORTANT:

Third-party hearing loss prevention programs are intended:

• For short-term employees hired or assigned to duties having noise exposures **for less than one year**

AND

• **For seasonal employees.**

However, other employees may be included as long as you meet all requirements for hearing loss follow-ups and recordkeeping.

You must:

• Make sure that the third-party program is:

– Equivalent to an employer program as required by this chapter

AND

– Uses audiometric testing to evaluate hearing loss.

• Make sure a licensed or certified audiologist, otolaryngologist, or other qualified physician administers the third-party program

• Make sure the third-party program has written procedures for:

– Communicating with participating employers of program requirements

– Follow-up procedures for detected hearing loss

– Annual review of participating employer programs.

• Make sure the following program elements are corrected by you or the third-party program when deficiencies are found:

– Noise exposures

– Hearing protection

– Employee training

– Noise controls.

• Obtain a review of your hearing loss prevention program at least once per year, conducted by the third-party program administrator or their representative, in order to:

– Identify any tasks needing a revised selection of hearing protection

AND

– Provide an overall assessment of the employers' hearing loss prevention activities.

[Statutory Authority: RCW 49.17.010, 49.17.040, 49.17.050, and 49.17.060. 03-11-060, § 296-817-50025, filed 5/19/03, effective 8/1/03.]

WAC 296-817-600 Noise definitions.

A-weighted - An adjustment to sound level measurements that reflects the sensitivity of the human ear. Used for evaluating continuous or average noise levels.

Audiogram - A chart, graph, or table resulting from an audiometric test showing an individual's hearing threshold levels as a function of frequency.

Audiologist - A professional, specializing in the study and rehabilitation of hearing, who is certified by the American Speech, Hearing, and Language Association, or the American Academy of Audiology, and is licensed by the state board of examiners.

Baseline audiogram - The audiogram against which future audiograms are compared. The baseline audiogram is collected when an employee is first assigned to work with noise exposure. The baseline audiogram may be revised if persistent standard threshold shift (STS) of improvement is found.

Continuous noise - Noise with peaks spaced no more than one second apart. Continuous noise is measured using sound level meters and noise dosimeters with the slow response setting.

Criterion sound level - A sound level of ninety decibels. An eight-hour exposure to constant 90 dBA noise is a one hundred percent noise dose exposure.

C-weighted - An adjustment to sound level measurements that evenly represents frequencies within the range of human hearing. Used for evaluating impact or impulse noise.

Decibel (dB) - Unit of measurement of sound level. A-weighting, adjusting for the sensitivity of the human ear, is indicated as "dBA." C-weighting, an even reading across the frequencies of human hearing, is indicated as "dBC."

Fast response - A setting for a sound level meter that will allow the meter to respond to noise events of less than one second. Used for evaluating impulse and impact noise levels.

Hertz (Hz) - Unit of measurement of frequency, numerically equal to cycles per second.

Impulsive or impact noise - Noise levels which involve maxima at intervals greater than one second. Impulse and impact noise are measured using the fast response setting on a sound level meter.

Noise dose - The total noise exposure received by an employee during their shift. It can be expressed as a percentage indicating the ratio of exposure received to the noise exposure received in an eight-hour exposure to constant noise at 90 dBA. It may also be expressed as the sound level that would produce the equivalent exposure during an eight-hour period (TWA_8).

Noise dosimeter - An instrument that integrates a function of sound pressure over a period of time in such a manner that it directly indicates a noise dose.

Occupational hearing loss - A reduction in the ability of an individual to hear either caused or contributed to by exposure in the work environment.

Otolaryngologist - A physician specializing in diagnosis and treatment of disorders of the ear, nose and throat.

Permanent threshold shift - A hearing level change that has become persistent and is not expected to improve.

Qualified reviewer - An audiologist, otolaryngologist, or other qualified physician who has experience and training in evaluating occupational audiograms.

Slow response - A setting for sound level meters and dosimeters in which the meter does not register events of less than about one second. Used for evaluating continuous and average noise levels.

Sound level - The intensity of noise as indicated by a sound level meter.

Sound level meter - An instrument that measures sound levels.

Standard threshold shift (STS) - A hearing level change, relative to the baseline audiogram, of an average of 10 dB or more at 2000, 3000, and 4000 Hz in either ear.

Temporary threshold shift - A hearing level change that improves. A temporary threshold shift may occur with exposure to noise and hearing will return to normal within a few days. Temporary threshold shifts can be indicators of exposures that lead to permanent hearing loss.

TWA_8 - Equivalent eight-hour time-weighted average sound level - That sound level, which if constant over an eight-hour period, would result in the same noise dose measured in an environment where the noise level varies.

[Statutory Authority: RCW 49.17.010, 49.17.040, 49.17.050, and 49.17.060. 03-11-060, § 296-817-600, filed 5/19/03, effective 8/1/03.]

Chapter 296-823 WAC

OCCUPATIONAL EXPOSURE TO BLOODBORNE PATHOGENS

WAC

296-823-100	Scope.
296-823-110	Planning.
296-823-11005	Determine if you have employees with occupational exposure.
296-823-11010	Develop and implement a written exposure control plan.
296-823-120	Training.
296-823-12005	Provide training to your employees.
296-823-12010	Provide additional training.
296-823-12015	Maintain training records.
296-823-130	Hepatitis B virus (HBV) vaccinations.
296-823-13005	Make hepatitis B vaccination available to employees.
296-823-13010	Obtain a copy of the health care professional's written opinion for hepatitis B vaccination and provide it to the employee.
296-823-140	Control employee exposure.
296-823-14005	Use feasible controls, including appropriate equipment and safer medical devices, to eliminate or minimize occupational exposure.
296-823-14010	Handle contaminated sharps properly and safely.
296-823-14015	Handle reusable sharps properly and safely.
296-823-14020	Minimize splashing, spraying, splattering, and generation of droplets.
296-823-14025	Make sure items are appropriately labeled.
296-823-14030	Make sure employees clean their hands.
296-823-14035	Prohibit food, drink, and other personal activities in the work area.
296-823-14040	Prohibit pipetting or suctioning by mouth.
296-823-14045	Place specimens in an appropriate container.
296-823-14050	Examine and label contaminated equipment.
296-823-14055	Make sure your worksite is maintained in a clean and sanitary condition.
296-823-14060	Handle regulated waste properly and safely.
296-823-14065	Handle contaminated laundry properly and safely.
296-823-150	Personal protective equipment (PPE).
296-823-15005	Provide and make sure personal protective equipment is used when there is occupational exposure.
296-823-15010	Make sure gloves are worn.
296-823-15015	Make sure appropriate masks, eye protection, and face shields are worn.
296-823-15020	Wear appropriate protective clothing.
296-823-15025	Make resuscitator devices available.
296-823-15030	Maintain personal protective equipment.
296-823-160	Post-exposure requirements.
296-823-16005	Make a confidential medical evaluation and follow-up available to employees who experience an exposure incident.
296-823-16010	Test the blood of the source person.
296-823-16015	Provide the results of the source person's blood test to the exposed employee.
296-823-16020	Collect and test the blood of the exposed employee.
296-823-16025	Provide information to the health care professional evaluating the employee.
296-823-16030	Obtain and provide a copy of the health care professional's written opinion on post-exposure evaluation to the employee.
296-823-170	Records.
296-823-17005	Establish and maintain medical records.
296-823-17010	Maintain a sharps injury log.
296-823-180	Additional requirements for HIV and HBV research laboratories and production facilities.
296-823-18005	Prepare, review, and update a biosafety manual.
296-823-18010	Follow these special practices for the work area.
296-823-18015	Make sure these practices for contaminated material and waste are followed.
296-823-18020	Make sure these special practices for personal protective equipment (PPE) and other safe guards are followed.
296-823-18025	Protect vacuum lines.
296-823-18030	Use and handle hypodermic needles and syringes appropriately and safely.
296-823-18035	Handle all spills and accidents properly.
296-823-18040	Post signs.
296-823-18045	Provide additional training for facility employees.
296-823-18050	Furnish a sink for washing hands and a readily available eye wash facility.
296-823-18055	Make sure these additional criteria are followed.
296-823-200	Definitions.

WAC 296-823-100 Scope. This chapter provides requirements to protect employees from exposure to blood or other potentially infectious materials (OPIM) that may contain bloodborne pathogens. Examples of bloodborne pathogens are the human immunodeficiency virus (HIV) and hepatitis B virus (HBV).

This chapter applies to you if you have employees with occupational exposure to blood or OPIM, even if no actual exposure incidents have occurred.

Definitions:

Occupational exposure means reasonably anticipated skin, eye, mucous membrane, or parenteral contact with blood or OPIM that may result from the performance of an employee's duties.

Exposure incident means a specific eye, mouth, other mucous membrane, nonintact skin or parenteral contact with blood or other potentially infectious materials (OPIM) that results from the performance of an employee's duties. Examples of nonintact skin include skin with dermatitis, hangnails, cuts, abrasions, chafing, or acne.

Parenteral contact occurs when mucous membranes or skin is pierced by needlesticks, human bites, cuts, or abrasions.

Occupations that are typically covered by this chapter. The following list illustrates a number of jobs typically associated with tasks that involve occupational exposure to blood or OPIM. The absence of a particular job from the list does not suggest that it falls outside the scope of this chapter. At the same time, employees in jobs found on the list are covered only if they have occupational exposure.

• **Health care.**

– Physicians and physicians assistants

– Nurses, nurse practitioners, dental hygienists, and other health care employees in clinics and offices

– Employees of clinical, dental, and diagnostic laboratories

– Housekeepers in health care facilities

– Staff in laundries that provide service to health care facilities

– Tissue bank personnel

– Employees in blood banks and plasma centers who collect, transport, and test blood

– Freestanding clinic employees (for example, hemodialysis clinics, urgent care clinics, health maintenance organization (HMO) clinics, and family planning clinics)

– Employees in clinics in industrial, educational, and correctional facilities

– Staff of institutions for the developmentally disabled

– Hospice employees

– Home health care workers

– Staff of nursing homes and long-term care facilities

– HIV and HBV research laboratory and production facility workers

– Medical equipment service and repair personnel

– Emergency medical technicians, paramedics, and other emergency medical service providers

– Nuclear medical technologists.

• **Occupations outside health care.**

– Fire fighters, law enforcement personnel, and correctional officers

– Workers in laundries that service public safety institutions

– Employees assigned to provide emergency first aid by their employer (as either a primary or secondary duty)

– Employees who handle or pick up regulated waste

– Hotel/motel employees that clean up blood or OPIM

– Employees of funeral homes and mortuaries.

Regulated waste.

Regulated waste is any of the following:

• Liquid or semiliquid blood or other potentially infectious materials (OPIM)

• Contaminated items that would release blood or OPIM in a liquid or semiliquid state, if compressed

• Items that are caked with dried blood or OPIM and are capable of releasing these materials during handling

• Contaminated sharps

• Pathological and microbiological wastes containing blood or OPIM.

[Statutory Authority: RCW 49.17.010, 49.17.040, 49.17.050, and 49.17.060. 04-12-070, § 296-823-100, filed 6/1/04, effective 9/1/04; 03-09-110, § 296-823-100, filed 4/22/03, effective 8/1/03.]

WAC 296-823-110 Planning. Summary.

Your responsibility:

To plan ways to protect your employees from the risk of exposure to blood or other potentially infectious materials.

You must:

Determine if you have employees with occupational exposure

WAC 296-823-11005

Develop and implement a written exposure control plan

WAC 296-823-11010.

[Statutory Authority: RCW 49.17.010, 49.17.040, 49.17.050, and 49.17.060. 03-09-110, § 296-823-110, filed 4/22/03, effective 8/1/03.]

WAC 296-823-11005 Determine if you have employees with occupational exposure.

You must:

• Prepare a written exposure determination if your employees have occupational exposure to blood or other potentially infectious materials (OPIM).

– This determination must be made without considering the use of personal protective equipment (PPE).

• Make sure the exposure determination contains:

– A list of job classifications where all employees have occupational exposure;

– A list of job classifications where some employees have occupational exposure and a description of all tasks and procedures or groups of related tasks and procedures with occupational exposure for these employees.

[Statutory Authority: RCW 49.17.010, 49.17.040, 49.17.050, and 49.17.060. 03-09-110, § 296-823-11005, filed 4/22/03, effective 8/1/03.]

WAC 296-823-11010 Develop and implement a written exposure control plan.

You must:

• Establish a written exposure control plan designed to eliminate or minimize employee exposure in your workplace.

Note: The elements of your exposure control plan may be located in other documents such as policies and procedures. Make sure to reference their location in your plan.

You must:

• Make sure the plan contains at least the following elements:

– The exposure determination, WAC 296-823-11005

– A procedure for evaluating the circumstances surrounding exposure incidents, including documentation of the routes of exposure, and the circumstances under which the exposure incident happened

– How and when you will implement applicable requirements of this rule.

Note: The implementation dates need to be included only until your exposure control plan is fully implemented or when you are adding new requirements to your plan.

You must:

• Document the infection control system used in your workplace to protect employees from exposure to blood or OPIM.

– Use universal precautions or other at least as effective infection control systems.

Note: Universal precautions is an infection control system that considers the blood and OPIM from all persons as containing a bloodborne disease, whether or not the person has been identified as having a bloodborne disease.

Other effective infection control systems include standard precautions, universal blood-body fluid precautions, and body substance isolation. These methods define all body fluids and substances as infectious. They incorporate not only the fluids and materials covered by universal precautions and this chapter, but expand coverage to include all body fluids and substances.

• Solicit input in the identification, evaluation, and selection of effective safer medical devices. This input must be solicited from nonmanagerial employees responsible for direct patient care with potential exposure to contaminated sharps.

– Document the process you used to solicit input and include the identity of the employees or positions that were involved.

Note:

- You are not required to request input from every exposed employee; however, the employees selected must represent the range of exposure situations encountered in the workplace. Your safety committee may assist in identifying employees.
- Although you are required to include nonmanagerial employees, you are not prohibited from soliciting input from managerial and other employees.

You must:

• Make sure the exposure control plan is reviewed and updated:

– At least annually

AND

– Whenever necessary to:

■ Reflect new or modified tasks and procedures which affect occupational exposure

■ Reflect new or revised job classifications with occupational exposure.

❖ Reflect changes in technology that eliminate or reduce exposure to bloodborne pathogens

❖ Document consideration and implementation of appropriate commercially available and effective safer medical devices designed to eliminate or minimize occupational exposure.

• Make sure a copy of the exposure control plan is accessible at the workplace, when exposed employees are present. For example, if the plan is stored only on a computer, all exposed employees must be trained to operate the computer.

• Make sure a copy of the plan is provided to the employee or their representative within fifteen days of their request for a copy.

[Statutory Authority: RCW 49.17.010, 49.17.040, 49.17.050, and 49.17.060. 04-12-070, § 296-823-11010, filed 6/1/04, effective 9/1/04; 03-09-110, § 296-823-11010, filed 4/22/03, effective 8/1/03.]

WAC 296-823-120 Training. Summary.

Your responsibility:

To train your employees about their risk of exposure to bloodborne pathogens and ways to protect themselves.

You must:

Provide training to your employees
WAC 296-823-12005
Provide additional training
WAC 296-823-12010
Maintain training records
WAC 296-823-12015.

[Statutory Authority: RCW 49.17.010, 49.17.040, 49.17.050, and 49.17.060. 03-09-110, § 296-823-120, filed 4/22/03, effective 8/1/03.]

WAC 296-823-12005 Provide training to your employees.

You must:

• Make sure all employees with occupational exposure participate in a training program that is:

– Provided at no cost to them

– Conducted during compensated working hours.

• Provide training when any of the following occur:

– Before assigning tasks where occupational exposure might occur

– At least annually and within one year of the previous training.

• Make sure the content and vocabulary of your training materials are appropriate to the educational level, literacy, and language of your employees

• Make sure the person conducting the required training is knowledgeable about the subject matter as it relates to your workplace

• Make sure the training program contains at least the following elements:

– An accessible copy of this chapter and an explanation of the contents

– A general explanation of the epidemiology and symptoms of bloodborne diseases

– An explanation of how bloodborne pathogens are transmitted

– An explanation of your exposure control plan and how the employee can obtain a copy of the written plan

– An explanation of how to recognize tasks and other activities that could involve exposure to blood and other potentially infectious materials (OPIM)

– An explanation of the use and limitations of methods that will prevent or reduce exposure including:

• Equipment and safer medical devices
• Work practices
• Personal protective equipment

– Information about personal protective equipment (PPE) including:

• The types
• Proper use and limitations
• Selection
• Location
• Putting it on and taking it off
• Handling
• Decontamination
• Disposal

– Information about the hepatitis B vaccine, including:

• Information about its effectiveness
• Safety
• Method of administration
• The benefits of being vaccinated
• Offered at no cost to the employee for the vaccine and vaccination

– Information about what actions to take and persons to contact when exposure to blood or OPIM occurs outside of the normal scope of work

– An explanation of the procedure to follow if an exposure incident occurs, including:

• The method of reporting the incident
• The medical evaluation and follow-up that will be available

– Information about the post-exposure evaluation and follow-up procedure following an exposure incident

– An explanation of the signs and labeling or color-coding required by this chapter

– An opportunity for interactive questions and answers with the trainer at the time of the training session.

Note: This may be person-to-person, by telephone, or by e-mail, as long as the employee can both ask and receive answers during the training session.

[Statutory Authority: RCW 49.17.010, 49.17.040, 49.17.050, and 49.17.060. 03-09-110, § 296-823-12005, filed 4/22/03, effective 8/1/03.]

WAC 296-823-12010 Provide additional training.

You must:

• Provide additional training when you add or change tasks or procedures that affect the employee's occupational exposure.

Note: This training may be limited to the changes in tasks and procedures.

[Statutory Authority: RCW 49.17.010, 49.17.040, 49.17.050, and 49.17.060. 04-12-070, § 296-823-12010, filed 6/1/04, effective 9/1/04; 03-09-110, § 296-823-12010, filed 4/22/03, effective 8/1/03.]

WAC 296-823-12015 Maintain training records.

• Maintain training records for three years from the date of the training

• Include the following information in your training records:

– Dates of the training sessions

– Contents or a summary of the training sessions

– Names and qualifications of persons conducting the training

– Names and job titles of all persons attending the training sessions.

• Provide these employee-training records upon request for examination and copying to any of the following:

– Employees

– Employee representatives.

Helpful tool:

Training documentation

A training documentation form is provided for your use in the resource section of this chapter.

[Statutory Authority: RCW 49.17.010, 49.17.040, 49.17.050, and 49.17.060. 03-09-110, § 296-823-12015, filed 4/22/03, effective 8/1/03.]

WAC 296-823-130 Hepatitis B virus (HBV) vaccinations. Summary.

Your responsibility:

To make the vaccination available to your employees so they are protected from the hepatitis B virus (HBV).

You must:

Make hepatitis B vaccination available to employees

WAC 296-823-13005

Obtain a copy of the health care professional's written opinion for hepatitis B vaccination and provide it to the employee

WAC 296-823-13010.

[Statutory Authority: RCW 49.17.010, 49.17.040, 49.17.050, and 49.17.060. 03-09-110, § 296-823-130, filed 4/22/03, effective 8/1/03.]

WAC 296-823-13005 Make hepatitis B vaccination available to employees.

Exemption:

• You are not required to provide the hepatitis B vaccination series to employees who meet any of the following:

– The employee has previously received the complete hepatitis B vaccination series

– An antibody test has revealed that the employee is immune to hepatitis B

– There are medical reasons not to give the vaccine.

• You are not required to provide the hepatitis B vaccination series to employees assigned to provide first aid only as a secondary duty, when you do all of the following:

– Make hepatitis B vaccination available to all unvaccinated first-aid providers who render assistance in any situation involving the presence of blood or OPIM.

■ Vaccination must be made available as soon as possible, but no later than twenty-four hours after the incident.

– Provide a reporting procedure that ensures all first-aid incidents that involve the presence of blood or OPIM are reported before the end of the work shift

– Document first-aid incidents that involve blood or OPIM, include at least:

■ The names of all first-aid providers who rendered assistance

■ The time and date of the first-aid incident

■ A description of the first-aid incident.

• Make sure that the hepatitis B vaccination series is available to all employees who have occupational exposure and that it is:

– Available at no cost to the employee

– Available to the employee at a reasonable time and location

– Administered by or under the supervision of a licensed physician or by another licensed healthcare professional

– Provided according to recommendations of the United States Public Health Service that are current at the time these evaluations and procedures take place

– Available to any employee who initially declines the vaccination but later decides to accept it while they are still covered by this chapter

– Made available after the employee has received training required by this chapter and within ten working days of initial assignment.

Link:

You can find more information about the United States Public Health Service recommendations for hepatitis B vaccination at http://www.cdc.gov/ncidod/diseases/hepatitis/b/index.htm.

You must:

• Make sure participation in a prevaccination screening program for antibody status is not a condition for receiving hepatitis B vaccination.

• Make sure that all laboratory tests are conducted by a laboratory licensed by the state or Clinical Laboratory Improvement Amendments (Act) (CLIA).

• Make sure employees who decline the hepatitis B vaccination, offered by you, sign a form with this statement:

"I understand that due to my occupational exposure to blood or other potentially infectious materials I may be at risk of acquiring hepatitis B virus (HBV) infection. I have been given the opportunity to be vaccinated with hepatitis B vaccine, at no charge to myself. However, I decline hepatitis B vaccination at this time. I understand that by declining this vaccine, I continue to be at risk of acquiring hepatitis B, a serious disease. If in the future I continue to have occupational exposure to blood or other potentially infectious materials and I want to be vaccinated with hepatitis B vaccine, I can receive the vaccination series at no charge to me."

Helpful tool:

Sample declination form:

The declination form can help you document employees who have declined the hepatitis B vaccine. You can find a copy of this form in the resource section of this chapter.

[Statutory Authority: RCW 49.17.010, 49.17.040, 49.17.050, and 49.17.060. 04-12-070, § 296-823-13005, filed 6/1/04, effective 9/1/04; 03-09-110, § 296-823-13005, filed 4/22/03, effective 8/1/03.]

WAC 296-823-13010 Obtain a copy of the health care professional's written opinion for hepatitis B vaccination and provide it to the employee.

You must:

• Obtain and provide the employee a copy of the evaluating health care professional's written opinion for hepatitis B vaccination within fifteen days of the employee's evaluation.

Note:
- If the health care professional provides the written opinion directly to the employee, you do not need to do so.
- If the employee's personal health care professional completes the evaluation, you are not required to obtain the health care professional's written opinion.

You must:

• Make sure the health care professional's written opinion is limited to whether a hepatitis B vaccination is indicated and if the employee has received this vaccination

• Make sure that all other findings or diagnoses remain confidential and are **not** included in the written report.

Reference: Requirements for the health care professional's written opinion on post-exposure evaluation can be found in WAC 296-823-16030.

Helpful tool:

Health care professional's written opinion for post-exposure evaluation and health care provider's written opinion for hepatitis B vaccination.

These forms are available for your use in the resource section of this chapter.

[Statutory Authority: RCW 49.17.010, 49.17.040, 49.17.050, and 49.17.060. 03-09-110, § 296-823-13010, filed 4/22/03, effective 8/1/03.]

WAC 296-823-140 Control employee exposure. Summary.

Your responsibility:

To use feasible controls to eliminate or minimize occupational exposure to blood or other potentially infectious materials (OPIM).

IMPORTANT:

If occupational exposure remains after implementing these controls, personal protective equipment must be used. See WAC 296-823-150, Personal protective equipment.

You must:

Use appropriate equipment and safer medical devices to eliminate or minimize occupational exposure

WAC 296-823-14005

Handle contaminated sharps properly and safely

WAC 296-823-14010

Handle reusable sharps properly and safely

WAC 296-823-14015

Minimize splashing, spraying, splattering and generation of droplets

WAC 296-823-14020

Make sure items are appropriately labeled

WAC 296-823-14025

Make sure employees clean their hands

WAC 296-823-14030

Prohibit food, drink, and other personal activities in the work area

WAC 296-823-14035

Prohibit pipetting or suctioning by mouth

WAC 296-823-14040

Place specimens in an appropriate container

WAC 296-823-14045

Examine and label contaminated equipment

WAC 296-823-14050

Make sure your worksite is maintained in a clean and sanitary condition

WAC 296-823-14055

Handle regulated waste properly and safely

WAC 296-823-14060

Handle contaminated laundry properly and safely

WAC 296-823-14065.

[Statutory Authority: RCW 49.17.010, 49.17.040, 49.17.050, and 49.17.060. 03-09-110, § 296-823-140, filed 4/22/03, effective 8/1/03.]

WAC 296-823-14005 Use feasible controls, including appropriate equipment and safer medical devices, to eliminate or minimize occupational exposure.

You must:

• Use appropriate equipment and safer medical devices to eliminate or minimize employee exposure.

• Use work practices designed to eliminate or minimize employee exposure.

• Examine and maintain or replace equipment and safer medical devices on a regular schedule to make sure they remain effective.

Note:
• Examples of appropriate equipment include:
– Sharps containers
– Biosafety cabinets
– Splash guards
– Centrifuge cups
– Specimen storage and transport containers.
• Examples of safer medical devices include:
– Sharps with engineered sharps injury protections (SESIP)
– Needleless systems
– Blunt suture needles
– Plastic capillary tubes.
• Examples of work practices include:
– No-hands procedures in handling contaminated sharps
– No hand-to-hand instrument passing.

Definition: **Sharps with engineered sharps injury protections (SESIP) is**
A nonneedle sharp or a needle device used for withdrawing body fluids, accessing a vein or artery, or administering medications or other fluids, with a built-in safety feature or mechanism that effectively reduces the risk of an exposure incident.

[Statutory Authority: RCW 49.17.010, 49.17.040, 49.17.050, and 49.17.060. 04-12-070, § 296-823-14005, filed 6/1/04, effective 9/1/04; 03-09-110, § 296-823-14005, filed 4/22/03, effective 8/1/03.]

WAC 296-823-14010 Handle contaminated sharps properly and safely.

You must:

• Make sure that you don't bend, recap, or remove contaminated needles or other contaminated sharps **unless** you can demonstrate that there is no feasible alternative or that it's required by a specific medical or dental procedure.

– Bending, recapping or needle removal must be done by using a mechanical device or a one-handed technique.

Note: Demonstrating that no alternative to bending, recapping, or removing contaminated sharps is feasible, may be accomplished through written justification, supported by reliable evidence, in your exposure control plan.

You must:

– Make sure you don't shear or break contaminated needles.

[Statutory Authority: RCW 49.17.010, 49.17.040, 49.17.050, and 49.17.060. 03-09-110, § 296-823-14010, filed 4/22/03, effective 8/1/03.]

WAC 296-823-14015 Handle reusable sharps properly and safely.

You must:

– Place contaminated reusable sharps immediately, or as soon as possible after use, in appropriate containers until properly decontaminated. Containers must be all of the following:

– Puncture resistant

– Labeled or color-coded as described in this chapter

– Leakproof on the sides and bottom

– Meet the same requirements as the container for disposable sharps, except they do not need to be closable.

• Store or process contaminated reusable sharps so employees aren't required to reach into the container or sink by hand

• Make sure reusable sharps containers aren't opened, emptied, or cleaned manually or in any other manner that would expose employees to contaminated sharps.

Reference: Requirements for appropriate labels and color-coding are found in WAC 296-823-14025.

[Statutory Authority: RCW 49.17.010, 49.17.040, 49.17.050, and 49.17.060. 04-12-070, § 296-823-14015, filed 6/1/04, effective 9/1/04; 03-09-110, § 296-823-14015, filed 4/22/03, effective 8/1/03.]

WAC 296-823-14020 Minimize splashing, spraying, splattering, and generation of droplets.

You must:

• Make sure all procedures involving blood or OPIM are performed so splashing, spraying, spattering, and generation of droplets are minimized.

– Examples include:

■ Appropriate operation and use of recommended controls for surgical power tools, lasers and electrocautery devices

■ Use of personal protective equipment when contact with blood or OPIM is reasonably anticipated

■ Making sure cleaning procedures do not generate unnecessary splashes, spraying, spattering, or generation of droplets.

[Statutory Authority: RCW 49.17.010, 49.17.040, 49.17.050, and 49.17.060. 03-09-110, § 296-823-14020, filed 4/22/03, effective 8/1/03.]

WAC 296-823-14025 Make sure items are appropriately labeled.

Exemptions: The following are exempt from the labeling requirements of this chapter:

- Individual containers placed in an appropriately labeled secondary container.
- Regulated waste that has been decontaminated.
- Containers of blood, blood components, or blood products that are labeled with their contents and have been released for transfusion or other clinical use.
- Extracted teeth, gallstones, kidney stones, or other tissues and body substances that are given to patients.

You must:

• Attach appropriate labels to:

– Containers used to store, transport, or ship blood or other potentially infectious materials (OPIM) including:

■ Refrigerators

■ Freezers.

– Sharps containers

– Contaminated equipment

– Laundry bags and containers

– Specimen containers

– Regulated waste containers.

• Make sure that labels:

■ Include the following symbol:

■ Are all or mostly fluorescent orange or orange-red with lettering and symbol in a contrasting color

■ Are attached to the container by string, wire, adhesive, or other method so they can't become lost or accidentally removed.

Note: Red bags or red containers may be substituted for labels as long as they're:

- Covered in the exposure control plan
- Communicated to all affected employees (including employees of laundry services, disposal services, and transport companies) whether they're your employees or not.
- The label does not always need to be attached to each individual container.
- For example, a cart carrying specimen containers could be labeled, rather than each individual container.

[Statutory Authority: RCW 49.17.010, 49.17.040, 49.17.050, and 49.17.060. 04-12-070, § 296-823-14025, filed 6/1/04, effective 9/1/04; 03-09-110, § 296-823-14025, filed 4/22/03, effective 8/1/03.]

WAC 296-823-14030 Make sure employees clean their hands.

You must:

(1) Provide handwashing facilities that are readily accessible to employees, wherever feasible. If handwashing facilities are not feasible, provide either one of the following:

– Antiseptic towelettes

– Antiseptic hand rub product along with clean cloth/paper towels.

(2) Make sure employees clean their hands as soon as feasible after removing gloves and whenever there is the potential for contact with blood or other potentially infectious materials (OPIM). Do one of the following:

• Wash with soap and water

• Use an appropriate waterless antiseptic hand rub product or towelettes, provided there are no signs of visible contamination

• Use an appropriate waterless antiseptic hand rub product or towelettes followed by washing with soap and water as soon as possible, when hands are visibly contaminated and handwashing facilities are not immediately available.

Note: An appropriate waterless antiseptic hand rub product is one that contains a 60-95% alcohol solution (isopropanol or ethanol).

You must:

(3) Make sure employees wash any skin with soap and water, or flush mucous membranes with water as soon as feasible following contact with blood or OPIM.

[Statutory Authority: RCW 49.17.010, 49.17.040, 49.17.050, and 49.17.060. 03-09-110, § 296-823-14030, filed 4/22/03, effective 8/1/03.]

WAC 296-823-14035 Prohibit food, drink, and other personal activities in the work area.

You must:

• Make sure eating, drinking, smoking, applying cosmetics or lip balm, and handling contact lenses are prohibited in work areas where there is occupational exposure

• Make sure food and drink are not kept in refrigerators, freezers, shelves, cabinets, or on countertops or benchtops where there is a potential for exposure to blood or other potentially infectious materials (OPIM).

[Statutory Authority: RCW 49.17.010, 49.17.040, 49.17.050, and 49.17.060. 03-09-110, § 296-823-14035, filed 4/22/03, effective 8/1/03.]

WAC 296-823-14040 Prohibit pipetting or suctioning by mouth.

You must:

• Prohibit mouth pipetting or suctioning of blood or other potentially infectious materials (OPIM).

[Statutory Authority: RCW 49.17.010, 49.17.040, 49.17.050, and 49.17.060. 03-09-110, § 296-823-14040, filed 4/22/03, effective 8/1/03.]

WAC 296-823-14045 Place specimens in an appropriate container.

You must:

• Place specimens of blood or other potentially infectious materials (OPIM) in an appropriate container that prevents leakage during collection, handling, processing, storage, transport, or shipping

• Make sure the container is properly labeled or color-coded and closed before being stored, transported, or shipped.

– If outside contamination of the container occurs, the container must be placed inside a second container that prevents leakage and is properly labeled or color-coded

– If the specimen could puncture the container, the container must be placed inside a second container that:

■ Is puncture-resistant

■ Prevents leakage during handling, processing, storage, transport, or shipping

■ Is properly labeled or color-coded.

Exemption: When your facility handles all specimens using universal precautions or other equivalent infection control systems, you don't have to label/color-code specimens as long as the containers can be recognized as containing specimens.
This exemption only applies while these specimens/containers remain within the facility. Proper labeling or color-coding is required when specimens/containers leave the facility.

Reference: Requirements for appropriate labels and color-coding are found in WAC 296-823-14025.

Helpful tool:

Guidance on the handling and storage of criminal evidence

This tool contains information about the handling and storage of criminal evidence. Criminal evidence contaminated with blood or OPIM is considered a specimen under the scope of this chapter. You can find a copy of this tool in the resource section of this chapter.

[Statutory Authority: RCW 49.17.010, 49.17.040, 49.17.050, and 49.17.060. 03-09-110, § 296-823-14045, filed 4/22/03, effective 8/1/03.]

WAC 296-823-14050 Examine and label contaminated equipment.

You must:

• Examine equipment which could become contaminated with blood or other potentially infectious materials (OPIM) before servicing or shipping.

– Decontaminate this equipment and its parts as necessary unless you can demonstrate that decontamination isn't feasible

– Attach an easily seen biohazard label to the equipment stating which portions remain contaminated.

Reference: Requirements for appropriate labels and color-coding are found in WAC 296-823-14025.

You must:

• Make sure that information on contaminated equipment is communicated to all affected employees, the servicing representative, and the manufacturer as appropriate, prior to handling, servicing, or shipping so that appropriate precautions will be taken.

[Statutory Authority: RCW 49.17.010, 49.17.040, 49.17.050, and 49.17.060. 04-12-070, § 296-823-14050, filed 6/1/04, effective 9/1/04; 03-09-110, § 296-823-14050, filed 4/22/03, effective 8/1/03.]

WAC 296-823-14055 Make sure your worksite is maintained in a clean and sanitary condition.

You must:

(1) Develop an appropriate written schedule for cleaning and decontamination based upon the following:

– The location within the facility

– Type of surface to be cleaned

– Type of contamination present

– Tasks or procedures being performed in the area.

(2) Clean and decontaminate environmental and working surfaces and all equipment after contact with blood or other potentially infectious materials (OPIM).

• Decontaminate work surfaces with an appropriate disinfectant at these times:

– After completion of a procedure

– Immediately or as soon as possible when surfaces are clearly contaminated or after any spill of blood or OPIM

– At the end of the workshift if the surface could have become contaminated since the last cleaning.

• Remove and replace protective coverings, such as plastic wrap, aluminum foil, or imperviously backed absorbent paper used to cover equipment and environmental surfaces, as soon as possible when they:

– Clearly become contaminated

– At the end of the workshift if they could have become contaminated during the shift.

• Inspect and clean (on a regularly scheduled basis) all bins, pails, cans, and similar receptacles intended for reuse that have a reasonable likelihood for becoming contaminated with blood or OPIM.

– Clean and decontaminate these types of receptacles immediately or as soon as possible when they are visibly contaminated.

• Use a brush and dustpan, tongs, forceps, or other mechanical means to clean up broken glassware that may be contaminated.

Note: An appropriate disinfectant is one that is effective against tuberculosis or HBV and HIV such as:
- Diluted bleach solution (1:10 or 1:100).
- Use the 1:10 bleach solution for spills and the 1:100 bleach solution for routine cleaning
- You can make your own bleach solution. Using household bleach (5.25% sodium hypochlorite) follow these directions:
- For a 1:100 solution add 2 teaspoons (10 ml) to a container, then add water to make a quart (946 ml). For a 1:10 solution, add 1/3 cup (79 ml) and 1 tablespoon (15 ml) in a container, then add water to make a quart (946 ml)
- EPA registered tuberculocidals (List B)
- Sterilants (List A)
- Products registered against HIV/HBV (List D).

Any of the above products are considered effective when used according to the manufacturers' instructions. Higher level disinfection may be required depending on the agent or level of decontamination.

Link:

These lists are available from the EPA Office of Pesticides, antimicrobial pesticides website at http://www.epa.gov/oppad001/chemregindex.htm.

[Statutory Authority: RCW 49.17.010, 49.17.040, 49.17.050, and 49.17.060. 03-09-110, § 296-823-14055, filed 4/22/03, effective 8/1/03.]

WAC 296-823-14060 Handle regulated waste properly and safely.

Definition:

Regulated waste is any of the following:

• Liquid or semiliquid blood or other potentially infectious materials (OPIM)

• Contaminated items that would release blood or OPIM in a liquid or semiliquid state, if compressed

• Items that are caked with dried blood or OPIM and are capable of releasing these materials during handling

• Contaminated sharps

• Pathological and microbiological wastes containing blood or OPIM.

You must:

• Discard contaminated sharps immediately, or as soon as possible, in containers that are all of the following:

– Closable

– Puncture resistant

– Leakproof on sides and bottom

– Appropriately labeled or color-coded

– Easily accessible to personnel

– Located as close as feasible to the immediate area where sharps are used or areas sharps can be reasonably anticipated to be found (for example, laundries)

– Maintained upright throughout use

– Replaced routinely and not allowed to overfill.

Exemption: Work areas such as correctional facilities, psychiatric units, pediatric units, or residential homes may have difficulty placing sharps containers in the immediate use area. In such situations, alternatives such as using lockable containers or bringing containers in and out of the work area may be used.

Note: For additional information on placement and use of sharps containers see *Selecting, Evaluating, and Using Sharps Disposal Containers*, NIOSH Publication 97-111, January 1998. You can obtain a copy of this publication by calling 1-800-35-NIOSH or get an electronic version in pdf at http://www.cdc.gov/niosh/publistd.htm.

You must:

• Make sure when you move containers of contaminated sharps, the containers are:

– Closed prior to removal or replacement to prevent spilling or protrusion of contents during handling, storage, transport, or shipping; and

– Placed in a secondary container, if leaking is possible. The second container must be:

■ Closable

■ Constructed to contain all contents and prevent leakage during handling, storage, transport, or shipping

■ Appropriately labeled or color-coded.

• Make sure regulated waste other than sharps is placed in containers that are all of the following:

– Closable

– Constructed to contain all contents and prevent leakage of fluids during handling, storage, transport, or shipping

– Closed prior to removal to prevent spillage or protrusion of contents during handling, storage, transport, or shipping

– Placed in a second container if outside contamination of the primary regulated waste container occurs.

■ The second container must meet these requirements.

– Appropriately labeled or color-coded.

• Dispose of all regulated waste according to applicable state and county regulations.

[Statutory Authority: RCW 49.17.010, 49.17.040, 49.17.050, and 49.17.060. 04-12-070, § 296-823-14060, filed 6/1/04, effective 9/1/04; 03-09-110, § 296-823-14060, filed 4/22/03, effective 8/1/03.]

WAC 296-823-14065 Handle contaminated laundry properly and safely.

You must:

• Handle laundry contaminated with blood or other potentially infectious material (OPIM) as little as possible and with a minimum of agitation

• Bag contaminated laundry or put it into a container at the location where it was used

– Do not sort or rinse at the location of use

– Place and transport contaminated laundry in bags or containers that are properly labeled or color-coded

– If your facility ships contaminated laundry off-site to a second facility that doesn't use an infection control or isolation system when handling all of their soiled laundry, your facility must place the laundry in red bags or containers that are appropriately labeled.

Note: If your facility uses an infection control or isolation system in the handling of all soiled laundry, you can use alternative labeling or color-coding so employees recognize that the containers need to be handled using these precautions.

Reference: Requirements for appropriate labels and color-coding are found in WAC 296-823-14025 of this chapter.

You must:

• Place and transport wet contaminated laundry that is likely to soak through or leak to the outside, in bags or containers that will prevent such leakage.

Reference: You need to follow additional requirements to make sure that employees who have contact with contaminated laundry wear protective gloves and other personal protective equipment (PPE) as appropriate, see WAC 296-823-150, Personal protective equipment.

[Statutory Authority: RCW 49.17.010, 49.17.040, 49.17.050, and 49.17.060. 04-12-070, § 296-823-14065, filed 6/1/04, effective 9/1/04; 03-09-110, § 296-823-14065, filed 4/22/03, effective 8/1/03.]

WAC 296-823-150 Personal protective equipment (PPE). Summary.

Your responsibility:

To provide and make sure personal protective equipment is used when work practices and controls will not fully protect your employees from the risk of exposure to blood or other potentially infectious materials.

You must:

Provide and make sure that personal protective equipment is used when there is occupational exposure

WAC 296-823-15005

Make sure gloves are worn

WAC 296-823-15010

Make sure masks, eye protection, and face shields are worn

WAC 296-823-15015

Wear appropriate protective clothing

WAC 296-823-15020

Make resuscitator devices available

WAC 296-823-15025

Maintain personal protective equipment

WAC 296-823-15030.

[Statutory Authority: RCW 49.17.010, 49.17.040, 49.17.050, and 49.17.060. 03-09-110, § 296-823-150, filed 4/22/03, effective 8/1/03.]

WAC 296-823-15005 Provide and make sure personal protective equipment is used when there is occupational exposure.

You must:

• Provide at no cost to employees, appropriate personal protective equipment such as:

– Gloves

– Gowns

– Laboratory coats

– Face shields or a combination of masks and eye protection

– Mouthpieces

– Resuscitation bags

– Pocket masks

– Other ventilation devices.

Note: • PPE is considered "appropriate" only if it does NOT permit blood or other potentially infectious materials (OPIM) to pass through to or reach the employee's work clothes, street clothes, undergarments, skin, eyes, mouth, or other mucous membranes under normal conditions of use and for the duration of time which the protective equipment will be used.

You must:

• Make sure that employees use appropriate PPE.

– In rare and extraordinary circumstances, employees can briefly and temporarily choose not to use PPE. If in their professional judgment, they believe that using PPE would prevent the delivery of health care or public safety services OR pose an increased hazard to themselves or coworkers.

• If the employee makes this judgment, you must investigate and document to determine if changes can be made to prevent future occurrences of the same situation

• Make sure that appropriate PPE, in sizes to fit your employees, is readily accessible at the worksite or issued to employees

• Make sure employees remove all PPE before leaving the work area.

[Statutory Authority: RCW 49.17.010, 49.17.040, 49.17.050, and 49.17.060. 03-09-110, § 296-823-15005, filed 4/22/03, effective 8/1/03.]

WAC 296-823-15010 Make sure gloves are worn.

You must:

• Make sure gloves appropriate to the situation are worn when:

– It can be reasonably anticipated that the employee may have hand contact with blood, other potentially infectious materials (OPIM), mucous membranes, or skin that is not intact

– Handling or touching contaminated items or surfaces

– Performing vascular access procedures, for example, drawing blood or inserting an IV.

You must:

• Do the following when you are an employer in a volunteer blood donation center and you make the judgment that employees do not require routine use of gloves when performing phlebotomies:

– Periodically reevaluate your decision not to require gloves

– Make gloves available to all employees who wish to use them for phlebotomy (blood drawing)

– Do not discourage the use of gloves for phlebotomy

– Require that gloves be used for phlebotomy in ANY of the following circumstances:

■ When the employee has a cut, scratch, or other break in the skin of his or her hand or wrist

■ When the employee judges that hand contamination with blood may occur; for example, when performing phlebotomy on an uncooperative individual

■ When the employee is receiving training in phlebotomy.

You must:

• Make sure employees who are allergic to the gloves that are normally provided have ready access to at least one of the following:

– Nonlatex gloves

– Glove liners

– Powderless gloves

– Other similar alternatives.

• Replace disposable (single use) gloves such as surgical or examination gloves:

– As soon as practical when contaminated

– As soon as practical if they are torn or punctured

– When their ability to function as a barrier is compromised.

• Make sure disposable (single use) gloves are used only once

• Discard utility gloves if they are cracked, peeling, torn, punctured, or show other signs of deterioration or when their ability to function as a barrier is compromised.

– You may decontaminate utility gloves for reuse if they can continue to function as a barrier.

[Statutory Authority: RCW 49.17.010, 49.17.040, 49.17.050, and 49.17.060. 04-12-070, § 296-823-15010, filed 6/1/04, effective 9/1/04; 03-09-110, § 296-823-15010, filed 4/22/03, effective 8/1/03.]

WAC 296-823-15015 Make sure appropriate masks, eye protection, and face shields are worn.

You must:

• Make sure either chin-length face shields or a combination of masks and eye protection are used, whenever splashes, spray, spatter, or droplets of blood or other potentially infectious materials (OPIM) may be generated and eyes, nose, or mouth contamination can be reasonably anticipated.

Note: Examples of eye protection devices include goggles and glasses with solid side shields.

[Statutory Authority: RCW 49.17.010, 49.17.040, 49.17.050, and 49.17.060. 04-12-070, § 296-823-15015, filed 6/1/04, effective 9/1/04; 03-09-110, § 296-823-15015, filed 4/22/03, effective 8/1/03.]

WAC 296-823-15020 Wear appropriate protective clothing.

You must:

• Make sure appropriate protective clothing is worn when splashes to skin or clothes are reasonably anticipated. The type and characteristics will depend upon the sort of work being done and how much exposure is anticipated.

Note: Examples of protective clothing include:
– Gowns
– Aprons
– Lab coats
– Clinic jackets
– Similar outer garments
– Surgical caps or hoods
– Shoe covers or boots.

You must:

• Remove a garment as soon as feasible if blood or other potentially infectious materials (OPIM) penetrate it.

[Statutory Authority: RCW 49.17.010, 49.17.040, 49.17.050, and 49.17.060. 04-12-070, § 296-823-15020, filed 6/1/04, effective 9/1/04; 03-09-110, § 296-823-15020, filed 4/22/03, effective 8/1/03.]

WAC 296-823-15025 Make resuscitator devices available.

You must:

• Make resuscitator (emergency ventilation) devices readily available and accessible to employees who can reasonably be expected to perform resuscitation procedures.

Note: Examples of resuscitator devices include:
– Masks
– Mouthpieces
– Resuscitation bags
– Shields/overlay barriers.

[Statutory Authority: RCW 49.17.010, 49.17.040, 49.17.050, and 49.17.060. 03-09-110, § 296-823-15025, filed 4/22/03, effective 8/1/03.]

WAC 296-823-15030 Maintain personal protective equipment.

You must:

• Clean, repair, replace, launder, and dispose of personal protective equipment required by this chapter, at no cost to the employee

• Make sure when PPE is removed, it is placed in an appropriately designated area or container for storage, washing, decontamination, or disposal.

Note: Contaminated personal clothing is considered PPE for the purposes of this section.

[Statutory Authority: RCW 49.17.010, 49.17.040, 49.17.050, and 49.17.060. 03-09-110, § 296-823-15030, filed 4/22/03, effective 8/1/03.]

WAC 296-823-160 Post-exposure requirements. Summary.

Your responsibility:

To make sure employees who have been exposed to blood or other potentially infectious materials (OPIM) have appropriate post-exposure evaluation and follow-up available.

You must:

Make a confidential medical evaluation and follow-up available to employees who experience an exposure incident

WAC 296-823-16005

Test the blood of the source person

WAC 296-823-16010

Provide the results of the source person's blood test to the exposed employee

WAC 296-823-16015

Collect and test the blood of the exposed employee

WAC 296-823-16020

Provide information to the health care professional evaluating the employee

WAC 296-823-16025

Obtain and provide a copy of the health care professional's written opinion on post-exposure evaluation to the employee

WAC 296-823-16030.

[Statutory Authority: RCW 49.17.010, 49.17.040, 49.17.050, and 49.17.060. 04-12-070, § 296-823-160, filed 6/1/04, effective 9/1/04; 03-09-110, § 296-823-160, filed 4/22/03, effective 8/1/03.]

WAC 296-823-16005 Make a confidential medical evaluation and follow-up available to employees who experience an exposure incident.

You must:

• Make immediately available a confidential post-exposure evaluation and follow-up to all employees with occupational exposure to blood or OPIM who report an exposure incident.

Definition:

Exposure incident. Means a specific eye, mouth, other mucous membrane, nonintact skin or parenteral contact with blood or other potentially infectious materials (OPIM) that results from the performance of an employee's duties. Examples of nonintact skin include skin with dermatitis, hangnails, cuts, abrasions, chafing, or acne.

You must:

• Make sure that the post-exposure medical evaluation and follow-up are all of the following:

– Immediately available following an exposure incident

– Confidential

– At no cost to the employee

– At a reasonable time and place

– Administered by or under the supervision of a licensed physician or by another licensed healthcare professional

– Provided according to recommendations of the United States Public Health Service current at the time these evaluations and procedures take place.

• Make sure that the evaluation and follow-up includes AT LEAST these elements:

– Documentation of the routes of exposure, and the circumstances under which the exposure incident happened

– Identification and documentation of the source individual, unless you can establish that identification is infeasible or prohibited by state or local law

– Collection and testing of blood to detect the presence of HBV and HIV

– Post-exposure preventive treatment, when medically indicated, as recommended by the United States Public Health Service

– Counseling

– Evaluation of reported illnesses.

• Make sure that all laboratory tests are conducted by a laboratory licensed by the state or Clinical Laboratory Improvement Amendments Act (CLIA).

Note: The employer or a third-party healthcare provider identified by the employer may do the evaluation.

[Statutory Authority: RCW 49.17.010, 49.17.040, 49.17.050, and 49.17.060. 04-12-070, § 296-823-16005, filed 6/1/04, effective 9/1/04; 03-09-110, § 296-823-16005, filed 4/22/03, effective 8/1/03.]

WAC 296-823-16010 Test the blood of the source person.

Exemption: When the source individual is already known to be infected with HBV or HIV, you do not need to test their status.

You must:

• Arrange to test the source individual's blood for HBV and HIV as soon as feasible after getting their consent.

– If you do not get consent, you must establish that legally required consent can not be obtained

– When the law does not require the source individual's consent, their blood, if available, must be tested and the results documented.

Note:
- Your local health authority enforces rules regarding HIV testing and consent which are found in WAC 246-100-206, Special diseases—Sexually transmitted diseases, and WAC 246-100-207, Human immunodeficiency virus (HIV) testing.
  These rules can be found at: http://www.leg.wa.gov/wac and click on Title 246 WAC.
- Source testing: According to the Centers for Disease Control and Prevention (CDC), hepatitis C virus (HCV) infection is the most common chronic bloodborne infection in the United States. The CDC recommends testing of the source person for the presence of anti-HCV antibody. (Updated *U.S. Public Health Service Guidelines for the Management of Occupational Exposures to HBV, HCV, and HIV and Recommendations for Postexposure Prophylaxis*, MMWR, June 29, 2000/50(RR11); 1-42.)

[Statutory Authority: RCW 49.17.010, 49.17.040, 49.17.050, and 49.17.060. 04-12-070, § 296-823-16010, filed 6/1/04, effective 9/1/04; 03-09-110, § 296-823-16010, filed 4/22/03, effective 8/1/03.]

WAC 296-823-16015 Provide the results of the source person's blood test to the exposed employee.

You must:

• Make sure the results of the source person's blood test are provided to the exposed employee, if possible

• Make sure the exposed employee is informed of applicable laws and regulations regarding disclosure of the identity and infection status of the source person.

Note: Law and regulations that currently apply are:
- Chapter 70.02 RCW, Medical records—Healthcare information access and disclosure.
- Chapter 70.24 RCW, Control and treatment of sexually transmitted diseases.
- Both rules can be found at http://www.leg.wa.gov/wac and click on Title 70 WAC to find these rules.

[Statutory Authority: RCW 49.17.010, 49.17.040, 49.17.050, and 49.17.060. 04-12-070, § 296-823-16015, filed 6/1/04, effective 9/1/04; 03-09-110, § 296-823-16015, filed 4/22/03, effective 8/1/03.]

WAC 296-823-16020 Collect and test the blood of the exposed employee.

You must:

• Arrange to have the exposed employee's blood collected and tested as soon as feasible after consent is obtained.

– If the employee consents to baseline blood collection, but does not give consent at that time for HIV serologic testing, the sample must be preserved for at least ninety days. If, within ninety days of the exposure incident, the employee chooses to have the baseline sample tested, it must be done as soon as possible.

[Statutory Authority: RCW 49.17.010, 49.17.040, 49.17.050, and 49.17.060. 03-09-110, § 296-823-16020, filed 4/22/03, effective 8/1/03.]

WAC 296-823-16025 Provide information to the health care professional evaluating the employee.

You must:

• Provide ALL of the following information to the health care professional evaluating an employee after an exposure incident:

– A copy of WAC 296-823-160

– A description of the job duties the exposed employee was performing when exposed

– Documentation of the routes of exposure and circumstances under which exposure occurred

– Results of the source person's blood testing, if available

– All medical records that you are responsible to maintain, including vaccination status, relevant to the appropriate treatment of the employee.

Reference: Requirements for the health care professional's written opinion for hepatitis B vaccinations can be found in WAC 296-823-13010.

Note: You may meet the requirement to provide a copy of WAC 296-823-160 to the health care professional by giving them the http://www.lni.wa.gov/rules/, as long as their office has a computer and access to the labor and industries' website.

[Statutory Authority: RCW 49.17.010, 49.17.040, 49.17.050, and 49.17.060. 04-12-070, § 296-823-16025, filed 6/1/04, effective 9/1/04; 03-09-110, § 296-823-16025, filed 4/22/03, effective 8/1/03.]

WAC 296-823-16030 Obtain and provide a copy of the health care professional's written opinion on post-exposure evaluation to the employee.

You must:

• Obtain and provide to the employee a copy of the evaluating health care professional's written opinion within fifteen days of the completion of their evaluation.

Note:
- If the health care professional provides the written opinion directly to the employee, you do not need to do so
- If the employee's personal health care professional completes the evaluation, you are not required to obtain the health care professional's written opinion.

• Make sure the health care professional's written opinion is limited to the following information:

– That the employee has been informed of the results of the evaluation

– That the employee has been told about any medical conditions resulting from exposure to blood or other potentially infectious materials (OPIM) which need further evaluation or treatment.

• Make sure that all other findings or diagnoses remain confidential and are NOT included in the written report.

[Statutory Authority: RCW 49.17.010, 49.17.040, 49.17.050, and 49.17.060. 04-12-070, § 296-823-16030, filed 6/1/04, effective 9/1/04; 03-09-110, § 296-823-16030, filed 4/22/03, effective 8/1/03.]

WAC 296-823-170 Records. Summary.

Your responsibility:

To obtain and maintain required records.

You must:

Establish and maintain medical records

WAC 296-823-17005

Maintain a sharps injury log

WAC 296-823-17010.

[Statutory Authority: RCW 49.17.010, 49.17.040, 49.17.050, and 49.17.060. 03-09-110, § 296-823-170, filed 4/22/03, effective 8/1/03.]

WAC 296-823-17005 Establish and maintain medical records.

You must:

• Establish and maintain an accurate medical record for each employee with occupational exposure

• Make sure this record includes ALL of the following that apply:

– Name and Social Security number of the employee

– A copy of the employee's hepatitis B vaccination status, including the dates of all the hepatitis B vaccinations

– Any medical records related to the employee's ability to receive vaccinations

– The HBV declination statement

– A copy of all results of examinations, medical testing, and follow-up procedures related to post-exposure evaluations

– Your copy of the health care professional's written opinion

– A copy of the information provided to the health care professional as required.

• Make sure that employee medical records are:

– Kept confidential

– Not disclosed or reported to any person, without the employee's written consent, except as required by this section or as may be required by law.

Note:
- In some industries, a medical record is also known as the employee health file.
- You may contract with the medical professional responsible for hepatitis B vaccination and post-exposure evaluation to maintain employee records.

Reference: You need to follow additional requirements for medical records found in WAC 296-62-052, Access to records.

[Statutory Authority: RCW 49.17.010, 49.17.040, 49.17.050, and 49.17.060. 03-09-110, § 296-823-17005, filed 4/22/03, effective 8/1/03.]

WAC 296-823-17010 Maintain a sharps injury log.

Exemption: You are exempt from the requirements to record contaminated sharps injuries if you have ten or less employees.

You must:

• Record contaminated sharps injuries on your OSHA 300 or equivalent log.

Reference: Requirements for the OSHA 300 log are found in chapter 296-27 WAC, Recordkeeping and reporting. http://www.lni.wa.gov/wisha/regs/WACS/27/27.htm.

You must:

• Record and maintain contaminated sharps injury information in a way that protects the confidentiality of the injured employee

• Also record the following additional information for contaminated sharps injuries:

– The type and brand of device involved in the incident

– The department or work area where the exposure incident occurred

– An explanation of how the incident occurred.

• Maintain your contaminated sharps injury records for five years.

Note: You may record the additional information in any format you choose, such as on the OSHA 300 and 301 forms. It must be retrievable and identifiable to each specific injury.

[Statutory Authority: RCW 49.17.010, 49.17.040, 49.17.050, and 49.17.060. 04-12-070, § 296-823-17010, filed 6/1/04, effective 9/1/04; 03-09-110, § 296-823-17010, filed 4/22/03, effective 8/1/03.]

WAC 296-823-180 Additional requirements for HIV and HBV research laboratories and production facilities. Summary.

Your responsibility:

To implement and enforce these additional rules in research laboratories and production facilities engaged in the culture, production, concentration, experimentation, and manipulation of HIV and HBV.

Exemption: This section does NOT apply to clinical or diagnostic laboratories engaged solely in the analysis of blood, tissues, or organs.

Note: Production and research facilities: Hepatitis C (HCV) is the virus involved in most cases of parenterally transmitted (bloodborne) non-A, non-B hepatitis in the United States. Most individuals who contract HCV become chronically infected (85%) and develop chronic hepatitis (70%). It is recommended that you also follow these requirements for HCV production and research facilities.

You must:

Prepare, review and update a biosafety manual

WAC 296-823-18005

Follow these special practices for the work area

WAC 296-823-18010

Make sure these practices for contaminated material and waste are followed

WAC 296-823-18015

Make sure these special practices for personal protective equipment (PPE) and other safe guards are followed

WAC 296-823-18020

Protect vacuum lines

WAC 296-823-18025

Use and handle hypodermic needles and syringes appropriately and safely

WAC 296-823-18030

Handle all spills and accidents properly

WAC 296-823-18035

Post signs

WAC 296-823-18040

Provide additional training for facility employees

WAC 296-823-18045

Furnish a sink for washing hands and a readily available eye wash facility

WAC 296-823-18050

Make sure these additional criteria are followed

WAC 296-823-18055.

[Statutory Authority: RCW 49.17.010, 49.17.040, 49.17.050, and 49.17.060. 04-12-070, § 296-823-180, filed 6/1/04, effective 9/1/04; 03-09-110, § 296-823-180, filed 4/22/03, effective 8/1/03.]

WAC 296-823-18005 Prepare, review, and update a biosafety manual.

You must:

• Prepare or adopt a biosafety manual. This manual must be:

– Periodically reviewed

– Updated at least annually or more often, if necessary.

• Make sure employees are:

– Advised of potential hazards

– Required to read and follow instructions about practices and procedures.

• Establish written policies and procedures where only authorized persons can enter work areas and animal rooms.

[Statutory Authority: RCW 49.17.010, 49.17.040, 49.17.050, and 49.17.060. 03-09-110, § 296-823-18005, filed 4/22/03, effective 8/1/03.]

WAC 296-823-18010 Follow these special practices for the work area.

You must:

• Make sure only authorized persons are allowed to enter the work areas and animal rooms. Authorized persons must:

– Have been advised of the potential biohazard

– Meet any specific entry requirements

– Comply with all entry and exit procedures.

• Keep laboratory doors closed when work involving HIV or HBV is in progress.

[Statutory Authority: RCW 49.17.010, 49.17.040, 49.17.050, and 49.17.060. 03-09-110, § 296-823-18010, filed 4/22/03, effective 8/1/03.]

WAC 296-823-18015 Make sure these practices for contaminated material and waste are followed.

You must:

• Incinerate or decontaminate all regulated waste by a method known to effectively destroy bloodborne pathogens, such as autoclaving

• Make sure to place materials to be decontaminated away from the work area in a container that is:

– Durable

– Leakproof

– Appropriately labeled, or color-coded

– Closed before being removed from the work area.

Reference: You can find additional requirements for appropriate labels and color-coding in WAC 296-823-14025.

You must:

• Incinerate or decontaminate ALL waste from work areas and from animal rooms before disposal

• Make sure an autoclave is available for decontamination of regulated waste. The autoclave must be available within or as near as possible to the work area.

[Statutory Authority: RCW 49.17.010, 49.17.040, 49.17.050, and 49.17.060. 04-12-070, § 296-823-18015, filed 6/1/04, effective 9/1/04; 03-09-110, § 296-823-18015, filed 4/22/03, effective 8/1/03.]

WAC 296-823-18020 Make sure these special practices for personal protective equipment (PPE) and other safe guards are followed.

You must:

• Make sure appropriate personal protective clothing is used in work areas and animal rooms. Examples of appropriate personal protective clothing include:

– Laboratory coats

– Gowns

– Smocks

– Uniforms.

• Decontaminate protective clothing before it is laundered

• Make sure employees remove protective clothing before leaving their work area

• Take special care to avoid skin contact with other potentially infectious materials (OPIM)

• Wear gloves when handling infected animals and when you can not avoid making hand contact with OPIM

• Conduct all activities involving OPIM in biological safety cabinets or other physical-containment devices within the containment module. No work with OPIM must be conducted on the open bench.

– Appropriate certified biological safety cabinets (Class I, II, or III) or personal protection or physical containment devices must be used for all activities with OPIM that pose a threat of exposure to droplets, splashes, spills, or aerosols. Appropriate personal protection and physical containment devices include:

■ Special protective clothing

■ Respirators

■ Centrifuge safety cups

■ Sealed centrifuge rotors

■ Containment caging for animals.

– Biological safety cabinets must be certified when installed or moved, and at least annually.

[Statutory Authority: RCW 49.17.010, 49.17.040, 49.17.050, and 49.17.060. 03-09-110, § 296-823-18020, filed 4/22/03, effective 8/1/03.]

WAC 296-823-18025 Protect vacuum lines.

You must:

• Protect vacuum lines with liquid disinfectant traps and high-efficiency particulate air (HEPA) filters or filters of same or greater efficiency. Make sure filters are checked routinely and maintained or replaced as necessary.

[Statutory Authority: RCW 49.17.010, 49.17.040, 49.17.050, and 49.17.060. 03-09-110, § 296-823-18025, filed 4/22/03, effective 8/1/03.]

WAC 296-823-18030 Use and handle hypodermic needles and syringes appropriately and safely.

You must:

• Use hypodermic needles and syringes only for parenteral injection and aspiration of fluids from laboratory animals and diaphragm bottles.

– Use only needle-locking syringes or disposable syringe-needle units (when the needle is integral to the syringe) for the injection or aspiration of other potentially infectious materials (OPIM)

– Use extreme caution when handling needles and syringes

– The needle must not be bent, sheared, replaced in the sheath or guard, or removed from the syringe after use

– Place the needle and syringe promptly in a puncture-resistant container and autoclave or decontaminate before reuse or disposal.

[Statutory Authority: RCW 49.17.010, 49.17.040, 49.17.050, and 49.17.060. 03-09-110, § 296-823-18030, filed 4/22/03, effective 8/1/03.]

WAC 296-823-18035 Handle all spills and accidents properly.

You must:

• Make sure appropriate professional staff or others, properly trained and equipped to work with concentrated potentially infectious materials, immediately contain and clean up all spills

• Make sure that employees report a spill or accident that results in an exposure incident immediately to the laboratory director or other responsible person.

[Statutory Authority: RCW 49.17.010, 49.17.040, 49.17.050, and 49.17.060. 03-09-110, § 296-823-18035, filed 4/22/03, effective 8/1/03.]

WAC 296-823-18040 Post signs.

You must:

• Post signs at the entrance to work areas and all access doors when other potentially infectious materials (OPIM) or infected animals are present in the work area or containment module.

• Make sure signs:

– Contain the following symbol and information:

(Name of the infectious agent)
(Special requirements for entering the area)
(Name, telephone number of the laboratory director or other responsible person.)

– Are all or mostly fluorescent orange-red with lettering and symbol in a contrasting color.

[Statutory Authority: RCW 49.17.010, 49.17.040, 49.17.050, and 49.17.060. 03-09-110, § 296-823-18040, filed 4/22/03, effective 8/1/03.]

WAC 296-823-18045 Provide additional training for facility employees.

You must:

• Provide initial training to employees in HIV or HBV research laboratories or production facilities in addition to the training required in WAC 296-823-120

• Make sure that employees demonstrate proficiency in the following:

– Standard microbiological practices and techniques

– The practices and operations specific to the facility BEFORE being allowed to work with HIV or HBV.

• Provide a training program to employees working with HIV or HBV who have no prior experience in handling human pathogens.

– Initial work activities must not include the handling of infectious agents

– A progression of work activities must be assigned as techniques are learned and proficiency is developed.

• Make sure that employees participate in work activities involving infectious agents only after proficiency has been demonstrated.

[Statutory Authority: RCW 49.17.010, 49.17.040, 49.17.050, and 49.17.060. 04-12-070, § 296-823-18045, filed 6/1/04, effective 9/1/04; 03-09-110, § 296-823-18045, filed 4/22/03, effective 8/1/03.]

WAC 296-823-18050 Furnish a sink for washing hands and a readily available eye wash facility.

You must:

• Make sure each work area contains a sink for hand-washing and an eyewash facility is readily available.

– For HIV and HBV production facilities, the sink must be operated automatically or by foot or elbow and must be located near the exit door of the work area.

Reference: Requirements for emergency eyewash stations can be found in WAC 296-800-15030.

[Statutory Authority: RCW 49.17.010, 49.17.040, 49.17.050, and 49.17.060. 04-12-070, § 296-823-18050, filed 6/1/04, effective 9/1/04; 03-09-110, § 296-823-18050, filed 4/22/03, effective 8/1/03.]

WAC 296-823-18055 Make sure these additional criteria are followed.

You must:

• Separate the HIV and HBV work areas from areas that are open to unrestricted traffic flow within the building

• Use two sets of doors to separate HIV and HBV work areas from access corridors or other contiguous areas.

Note: You may provide a physical separation of the high-containment work area from access corridors or other areas or activities by providing:
– A double-doored clothes-change room (showers may be included)
– Airlock
OR
– Other access facilities that require passing through two sets of doors before entering the work area.

• Make sure the surfaces of doors, walls, floors, and ceilings in the work area are water resistant so they can be easily cleaned. These surfaces must be sealed or capable of being sealed to facilitate decontamination

• Make sure access doors to the work area or containment module are self-closing

• Provide a ducted exhaust-air ventilation system. This system must create directional airflow that draws air into the

work area through the entry area and you must verify this airflow. The exhaust air must:

– NOT be recirculated to any other area of the building

– Be discharged to the outside

– Be dispersed away from occupied areas and air intakes.

[Statutory Authority: RCW 49.17.010, 49.17.040, 49.17.050, and 49.17.060. 04-12-070, § 296-823-18055, filed 6/1/04, effective 9/1/04; 03-09-110, § 296-823-18055, filed 4/22/03, effective 8/1/03.]

WAC 296-823-200 Definitions.

Blood

Human blood, human blood components and products made from human blood. Also included are medications derived from blood, such as immune globulins, albumin, and factors 8 and 9.

Bloodborne pathogens

Pathogenic microorganisms that are present in human blood and can cause disease in humans. Examples of these pathogens include:

• Human immunodeficiency virus (HIV)
• Hepatitis B virus (HBV)
• Hepatitis C virus, malaria
• Syphilis
• Babesiosis
• Brucellosis
• Leptospirosis
• Arboviral infections
• Relapsing fever
• Creutzfeld-Jakob Disease
• Human T-lymphotrophic virus Type I
• Viral Hemorrhagic Fever.

Clinical laboratory

A workplace where diagnostic or other screening procedures are performed on blood or other potentially infectious materials (OPIM).

Contaminated

The presence or the reasonably anticipated presence of blood or other potentially infectious materials (OPIM) on an item or surface.

Contaminated laundry

Laundry that has been soiled with blood or other potentially infectious materials (OPIM) or may contain contaminated sharps.

Contaminated sharps

Any contaminated object that can penetrate the skin including, but not limited to, needles, scalpels, broken glass, broken capillary tubes, and exposed ends of dental wires.

Decontamination

The use of physical or chemical means to remove, inactivate, or destroy bloodborne pathogens on a surface or item to the point where they are no longer capable of transmitting infectious particles and the surface or item is rendered safe for handling, use, or disposal.

Exposure incident

A specific eye, mouth, other mucous membrane, nonintact skin or parenteral contact with blood or other potentially infectious materials (OPIM) that results from the performance of an employee's duties. Examples of nonintact skin include skin with dermatitis, hangnails, cuts, abrasions, chafing, or acne.

Handwashing facilities

A facility providing an adequate supply of running potable water, soap and single use towels or hot air drying machines.

Licensed healthcare professional

A person whose legally permitted scope of practice allows him or her to independently perform the activities required by this rule.

Needleless systems

A device that does not use needles for any of the following:

• The collection of bodily fluids or withdrawal of body fluids after initial venous or arterial access is established

• The administration of medication or fluids

• Any other procedure involving the potential for occupational exposure to bloodborne pathogens due to percutaneous injuries from contaminated sharps.

Occupational exposure

Reasonably anticipated skin, eye, mucous membrane, or parenteral contact with blood or OPIM that may result from the performance of an employee's duties.

Other potentially infectious materials (OPIM)

Includes all of the following:

• Human body fluids: Semen, vaginal secretions, cerebrospinal fluid, synovial fluid, pleural fluid, pericardial fluid, peritoneal fluid, amniotic fluid, saliva in dental procedures, any body fluid that is visibly contaminated with blood, and all body fluids in situations where it is difficult or impossible to differentiate between body fluids;

• Any unfixed tissue or organ (other than intact skin) from a human (living or dead);

• HIV-containing cell or tissue cultures, organ cultures, and HIV- or HBV-containing culture medium or other solutions; and blood, organs, or other tissues from experimental animals infected with HIV or HBV

• Blood and tissues of experimental animals infected with bloodborne pathogens.

Parenteral contact

When mucous membranes or skin is pierced by needlesticks, human bites, cuts, or abrasions.

Personal protective equipment (PPE)

Specialized clothing or equipment worn by an employee for protection against a hazard. General work clothes (for example, uniforms, pants, shirts, or blouses) not intended to function as protection against a hazard are not considered to be PPE.

Production facility

A facility engaged in industrial-scale, large-volume or high concentration production of HIV or HBV.

Regulated waste

Regulated waste is any of the following:

• Liquid or semiliquid blood or other potentially infectious materials (OPIM)

• Contaminated items that would release blood or OPIM in a liquid or semiliquid state, if compressed

• Items that are caked with dried blood or OPIM and are capable of releasing these materials during handling

• Contaminated sharps

• Pathological and microbiological wastes containing blood or OPIM.

Research laboratory

A laboratory producing or using research-laboratory-scale amounts of HIV or HBV. Research laboratories may produce high concentrations of HIV or HBV but not in the volume found in production facilities.

Safer medical devices

Medical devices that have been engineered to reduce the risk of needlesticks and other contaminated sharps injuries. These include not only sharps with engineered sharps injury protections and needleless systems but also other medical devices designed to reduce the risk of sharps injury exposures to bloodborne pathogens. Examples include blunt suture needles and plastic or mylar-wrapped glass capillary tubes.

Secondary duty

Any job expectation outside the primary job duties assigned to that position.

Sharps with engineered sharps injury protections (SESIP)

A nonneedle sharp or a needle device used for withdrawing body fluids, accessing a vein or artery, or administering medications or other fluids, with a built-in safety feature or mechanism that effectively reduces the risk of an exposure incident.

Source person

A person, living or dead, whose blood or other potentially infectious materials may be a source (OPIM) of occupational exposure to the employee. Examples include:

- Hospital and clinic patients
- Clients in institutions for the developmentally disabled
- Trauma victims
- Clients of drug and alcohol treatment facilities
- Residents of hospices and nursing homes
- Human remains
- Individuals who donate or sell blood or blood components.

Standard microbiological practices

Standard microbiological practices refer to procedures comparable to those outlined in the current edition of the Center for Disease Control "*Biosafety in Microbiological and Biomedical Laboratories*."

Sterilize

The use of a physical or chemical procedure to destroy all microbial life including highly resistant bacterial endospores.

Universal precautions

An approach to infection control. According to the concept of universal precautions, all human blood and certain human body fluids are treated as if known to be infectious for HIV, HBV, and other bloodborne pathogens.

Note: Universal Blood-Body Fluid Precautions, Body Substance Isolation, and Standard Precautions expand on the concept of universal precautions to include all body fluids and substances as infectious. These concepts are acceptable alternatives to universal precautions.

[Statutory Authority: RCW 49.17.010, 49.17.040, 49.17.050, and 49.17.060. 04-12-070, § 296-823-200, filed 6/1/04, effective 9/1/04; 03-09-110, § 296-823-200, filed 4/22/03, effective 8/1/03.]

Chapter 296-824 WAC
EMERGENCY RESPONSE

WAC

296-824-100	Scope.
296-824-110	Reserved.
296-824-11010	Reserved.
296-824-11020	Reserved.
296-824-11050	Reserved.
296-824-11060	Reserved.
296-824-12010	Reserved.
296-824-12020	Reserved.
296-824-12030	Reserved.
296-824-12040	Reserved.
296-824-12050	Reserved.
296-824-12060	Reserved.
296-824-13010	Reserved.
296-824-13020	Reserved.
296-824-13030	Reserved.
296-824-14010	Reserved.
296-824-15010	Reserved.
296-824-200	Planning.
296-824-20005	Develop an emergency response plan.
296-824-300	Training.
296-824-30005	Train your employees.
296-824-400	Medical surveillance.
296-824-40005	Provide medical surveillance to employees.
296-824-40010	Keep records.
296-824-500	Incident requirements.
296-824-50005	Recognize emergencies and initiate a response.
296-824-50010	Implement and maintain an incident command system (ICS).
296-824-50015	Prepare skilled support personnel.
296-824-50020	Make sure the incident commander oversees activities during the response.
296-824-50025	Use the buddy system in danger areas.
296-824-50030	Provide rescue and medical assistance.
296-824-600	Personal protective equipment.
296-824-60005	Personal protective equipment.
296-824-60010	Control hazards created by personal protective equipment (PPE).
296-824-60015	Use personal protective equipment (PPE) properly.
296-824-700	Postemergency response.
296-824-70005	Follow the appropriate postemergency response requirements.
296-824-800	Definitions.

WAC 296-824-100 Scope. This chapter states the minimum requirements that help you protect the safety and health of your employees during a response to a *hazardous substance releases* in your *workplace* or any other location.

This chapter applies if your employees are, or could become, involved in responding to uncontrolled releases of hazardous substances in your workplace or any other location. Use the scope flow chart, and definitions that follow, to determine if this chapter applies to your workplace(s). Defined words are italicized in the flow chart.

EXEMPTION:
- This chapter does not apply to you if your workplace is a hazardous waste site. If you are not sure about your site classification, see chapter 296-62 WAC, Part P, Hazardous waste operations and treatment, storage, and disposal facilities.
- If your workplace is a treatment, storage, and disposal site this chapter may apply.

Note: Requirements in other chapters may also apply to your workplace. You will find some safety and health requirements (for example, personal protective equipment) are addressed on a general level in the WISHA Safety and Health Core Rules, chapter 296-800 WAC, while being addressed for a specific application in this rule. When this happens, both requirements apply and should not conflict. If you are uncertain which requirements to follow, you must comply with the more protective requirement. Contact your local L&I office if you need assistance in making this determination.

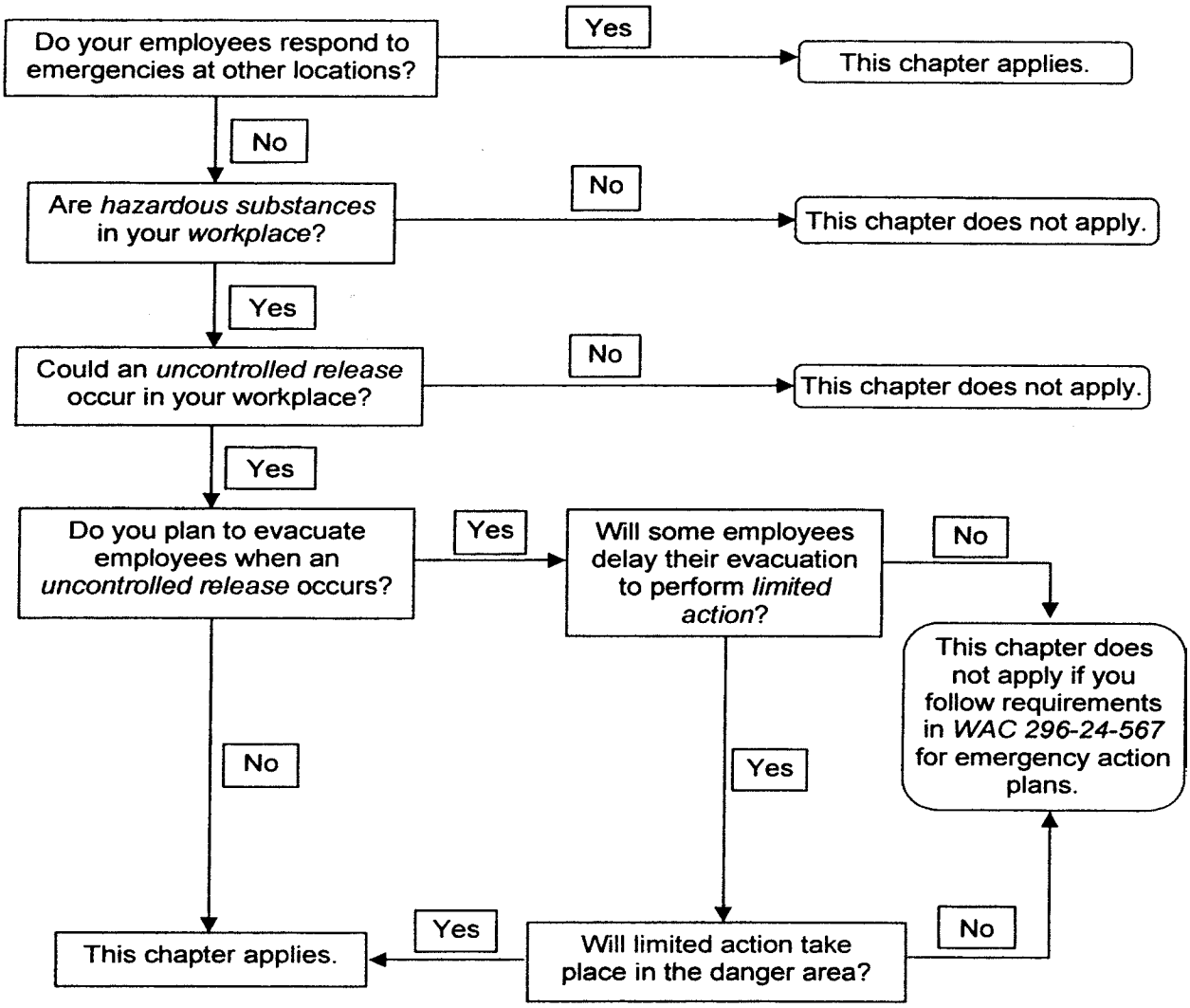

Definitions applicable to the flow chart. (See WAC 296-824-800 for additional definitions used in the chapter):

Danger area

Areas where conditions pose a serious danger to employees, such as areas where:

• Immediately dangerous to life or health (IDLH) conditions could exist

OR

• High levels of exposure to toxic substances could exist

OR

• There is a potential for exceeding the lower explosive limit (LEL), also known as the lower flammability limit (LFL), of a substance.

Emergency response

A response to an anticipated release of a hazardous substance that is, or could become, an *uncontrolled release*.

Hazardous substance

Any biological, radiological, or chemical substance that can have adverse effects on humans. (See WAC 296-824-800 for a more specific definition.)

Immediately dangerous to life or health (IDLH)

Any atmospheric condition that would:

• Cause an immediate threat to life

• Cause permanent or delayed adverse health effects

• Interfere with an employee's ability to escape

Incidental release

A release that can be safely controlled at the time of the release and does not have the potential to become an *uncontrolled release*.

Example of a situation that results in an incidental release:

A tanker truck is receiving a load of hazardous liquid when a leak occurs. The driver knows the only hazard from the liquid is minor skin irritation. The employer has trained the driver on procedures and provided equipment to use for a release of this quantity. The driver puts on skin protection and stops the leak. A spill kit is used to contain, absorb, and pick up the spilled material for disposal.

Limited action

Action necessary to:

• Secure an operation during emergency responses,

OR

• Prevent an incident from increasing in severity.

Examples include shutting down processes and closing emergency valves.

Release

A spill, leak, or other type of hazardous substance discharge.

Uncontrolled release

A release where significant safety and health risks could be created. Releases of hazardous substances that are either incidental or could not create a safety or health hazard (i.e., fire, explosion or chemical exposure) are not considered to be uncontrolled releases.

Examples of conditions that could create a significant safety and health risk:

- Large-quantity releases
- Small-releases that could be highly toxic
- Potentially contaminated individuals arriving at hospitals
- Airborne exposures that could exceed a WISHA permissible exposure limit or a published exposure limit and employees are not adequately trained or equipped to control the release.

Example of an uncontrolled release:

A forklift driver knocks over a container of a solvent-based liquid, releasing the contents onto the warehouse floor. The driver has been trained to recognize the vapor is flammable and moderately toxic when inhaled. The driver has not been trained or provided appropriate equipment to address this type of spill. In this situation, it is not safe for the driver to attempt a response. The driver needs to notify someone of the release so an emergency response can be initiated.

Workplace

- A fixed facility

OR

- A temporary location (such as a traffic corridor)

OR

- Locations where employees respond to emergencies.

[Statutory Authority: RCW 49.17.010, [49.17].040, [49.17].050, and [49.17].060. 02-20-034, § 296-824-100, filed 9/24/02, effective 10/1/02. Statutory Authority: RCW 49.17.010, [49.17].040, and [49.17].050. 02-11-141, § 296-824-100, filed 5/22/02, effective 10/1/02.]

WAC 296-824-110 Reserved.

[Statutory Authority: RCW 49.17.010, [49.17].040, [49.17].050, and [49.17].060. 02-20-034, § 296-824-110, filed 9/24/02, effective 10/1/02. Statutory Authority: RCW 49.17.010, [49.17].040, and [49.17].050. 02-11-141, § 296-824-110, filed 5/22/02, effective 10/1/02.]

WAC 296-824-11010 Reserved.

[Statutory Authority: RCW 49.17.010, [49.17].040, [49.17].050, and [49.17].060. 02-20-034, § 296-824-11010, filed 9/24/02, effective 10/1/02. Statutory Authority: RCW 49.17.010, [49.17].040, and [49.17].050. 02-11-141, § 296-824-11010, filed 5/22/02, effective 10/1/02.]

WAC 296-824-11020 Reserved.

[Statutory Authority: RCW 49.17.010, [49.17].040, [49.17].050, and [49.17].060. 02-20-034, § 296-824-11020, filed 9/24/02, effective 10/1/02. Statutory Authority: RCW 49.17.010, [49.17].040, and [49.17].050. 02-11-141, § 296-824-11020, filed 5/22/02, effective 10/1/02.]

WAC 296-824-11050 Reserved.

[Statutory Authority: RCW 49.17.010, [49.17].040, [49.17].050, and [49.17].060. 02-20-034, § 296-824-11050, filed 9/24/02, effective 10/1/02. Statutory Authority: RCW 49.17.010, [49.17].040, and [49.17].050. 02-11-141, § 296-824-11050, filed 5/22/02, effective 10/1/02.]

WAC 296-824-11060 Reserved.

[Statutory Authority: RCW 49.17.010, [49.17].040, [49.17].050, and [49.17].060. 02-20-034, § 296-824-11060, filed 9/24/02, effective 10/1/02. Statutory Authority: RCW 49.17.010, [49.17].040, and [49.17].050. 02-11-141, § 296-824-11060, filed 5/22/02, effective 10/1/02.]

WAC 296-824-12010 Reserved.

[Statutory Authority: RCW 49.17.010, [49.17].040, [49.17].050, and [49.17].060. 02-20-034, § 296-824-12010, filed 9/24/02, effective 10/1/02. Statutory Authority: RCW 49.17.010, [49.17].040, and [49.17].050. 02-11-141, § 296-824-12010, filed 5/22/02, effective 10/1/02.]

WAC 296-824-12020 Reserved.

[Statutory Authority: RCW 49.17.010, [49.17].040, [49.17].050, and [49.17].060. 02-20-034, § 296-824-12020, filed 9/24/02, effective 10/1/02. Statutory Authority: RCW 49.17.010, [49.17].040, and [49.17].050. 02-11-141, § 296-824-12020, filed 5/22/02, effective 10/1/02.]

WAC 296-824-12030 Reserved.

[Statutory Authority: RCW 49.17.010, [49.17].040, [49.17].050, and [49.17].060. 02-20-034, § 296-824-12030, filed 9/24/02, effective 10/1/02. Statutory Authority: RCW 49.17.010, [49.17].040, and [49.17].050. 02-11-141, § 296-824-12030, filed 5/22/02, effective 10/1/02.]

WAC 296-824-12040 Reserved.

[Statutory Authority: RCW 49.17.010, [49.17].040, [49.17].050, and [49.17].060. 02-20-034, § 296-824-12040, filed 9/24/02, effective 10/1/02. Statutory Authority: RCW 49.17.010, [49.17].040, and [49.17].050. 02-11-141, § 296-824-12040, filed 5/22/02, effective 10/1/02.]

WAC 296-824-12050 Reserved.

[Statutory Authority: RCW 49.17.010, [49.17].040, [49.17].050, and [49.17].060. 02-20-034, § 296-824-12050, filed 9/24/02, effective 10/1/02. Statutory Authority: RCW 49.17.010, [49.17].040, and [49.17].050. 02-11-141, § 296-824-12050, filed 5/22/02, effective 10/1/02.]

WAC 296-824-12060 Reserved.

[Statutory Authority: RCW 49.17.010, [49.17].040, [49.17].050, and [49.17].060. 02-20-034, § 296-824-12060, filed 9/24/02, effective 10/1/02. Statutory Authority: RCW 49.17.010, [49.17].040, and [49.17].050. 02-11-141, § 296-824-12060, filed 5/22/02, effective 10/1/02.]

WAC 296-824-13010 Reserved.

[Statutory Authority: RCW 49.17.010, [49.17].040, [49.17].050, and [49.17].060. 02-20-034, § 296-824-13010, filed 9/24/02, effective 10/1/02. Statutory Authority: RCW 49.17.010, [49.17].040, and [49.17].050. 02-11-141, § 296-824-13010, filed 5/22/02, effective 10/1/02.]

WAC 296-824-13020 Reserved.

[Statutory Authority: RCW 49.17.010, [49.17].040, [49.17].050, and [49.17].060. 02-20-034, § 296-824-13020, filed 9/24/02, effective 10/1/02. Statutory Authority: RCW 49.17.010, [49.17].040, and [49.17].050. 02-11-141, § 296-824-13020, filed 5/22/02, effective 10/1/02.]

WAC 296-824-13030 Reserved.

[Statutory Authority: RCW 49.17.010, [49.17].040, [49.17].050, and [49.17].060. 02-20-034, § 296-824-13030, filed 9/24/02, effective 10/1/02. Statutory Authority: RCW 49.17.010, [49.17].040, and [49.17].050. 02-11-141, § 296-824-13030, filed 5/22/02, effective 10/1/02.]

WAC 296-824-14010 Reserved.

[Statutory Authority: RCW 49.17.010, [49.17].040, [49.17].050, and [49.17].060. 02-20-034, § 296-824-14010, filed 9/24/02, effective 10/1/02. Statutory Authority: RCW 49.17.010, [49.17].040, and [49.17].050. 02-11-141, § 296-824-14010, filed 5/22/02, effective 10/1/02.]

WAC 296-824-15010 Reserved.

[Statutory Authority: RCW 49.17.010, [49.17].040, [49.17].050, and [49.17].060. 02-20-034, § 296-824-15010, filed 9/24/02, effective 10/1/02. Statutory Authority: RCW 49.17.010, [49.17].040, and [49.17].050. 02-11-141, § 296-824-15010, filed 5/22/02, effective 10/1/02.]

WAC 296-824-200 Planning.

Your Responsibility:

To anticipate and plan for emergency response operations.

[Statutory Authority: RCW 49.17.010, [49.17].040, [49.17].050, and [49.17].060. 02-20-034, § 296-824-200, filed 9/24/02, effective 10/1/02.]

WAC 296-824-20005 Develop an emergency response plan.

Note:
- You may already have an emergency response plan, such as required by chapter 296-62 WAC, Part P, Hazardous waste operations and treatment, storage and disposal facilities or by state and locally coordinated response efforts (Section 303 of Superfund Amendments and Reauthorization Act (SARA), Title III). You may use those plans to comply with this section, if they include the items listed below.
- Before a written emergency response plan can be developed, you will need to anticipate the types of uncontrolled releases that employees could encounter in your workplace(s).

You must:

(1) Make sure your plan is written and adequately addresses, as a minimum, all of the following:

• Preemergency planning and coordination with additional responders (including personnel from other employers such as: Fire departments, law enforcement agencies, emergency medical services, and state or federal agencies).

• Personnel roles, (See Table 1) and lines of authority and communications for all affected parties including responders

• Employee training (see WAC 296-824-30005 for more detail):

Note:
- Responders' level of training depends on the duties or roles the employer assigns.
- Training for the employees' role should address the competencies specified in Tables 3 through 6.
- Training on specific substances may be appropriate depending on the number and characteristics of hazardous substances expected to be encountered. For example, if employees may only respond to one substance, you could provide training (covering the knowledge and skills specified in Tables 3 through 6) on that single substance. If employees might respond to a range of hazardous substances, training may be required to cover categories of hazardous substances.
- Videos and automated training methods (for example: Interactive computer-based programs) may be used in training; however, instructors must be readily available to:
  - Encourage and provide responses to questions for the benefit of the group.
  - Evaluate employee understanding of the material.
  - Provide other instructional interaction to the group.

• Emergency recognition

• Immediate emergency procedures including:

– Methods of alerting employees (see WAC 296-800-310, exit routes and employee alarm systems) and outside responders

– Procedures for limited action (emergency prevention)

Note: ***Limited action*** includes shutting down processes, closing emergency valves and other critical actions to secure the operation, or prevent the incident from increasing in severity.

Limited Action and Employee Roles	
If. . .	**Then employees involved would be:**
Limited action could be conducted in the danger area	Considered emergency responders
Limited action will not be conducted in the danger area	Considered evacuees, not emergency responders

– Details of who will evacuate immediately and who will remain behind for limited action

– Evacuation routes and procedures

– How to establish safe distances and places of refuge (for example, during emergency response the incident commander (IC) decides to make changes based on new developments, i.e., changes in the wind direction).

• Methods of securing and controlling access to the site

• Emergency medical treatment and first aid

• A complete personal protective equipment (PPE) program that addresses:

– Selection of PPE including selection criteria to be used and the identification, specified use and limitations of the PPE selected.

– Training on proper use of PPE (including maintenance).

– Hazards created by wearing PPE including heat stress during temperature extremes, and/or other appropriate medical considerations.

– Criteria used for determining the proper fit of PPE.

– Procedures covering proper use of PPE including procedures for inspection, putting it on (donning) and removing it (doffing).

– Maintenance of PPE including procedures for decontamination, disposal and storage.

– Methods used to evaluate the effectiveness of your PPE program.

Note:
- If a manufacturer's printed information or WISHA rule adequately addresses procedural requirements (such as donning or doffing for PPE), it is not necessary to rewrite this into your program; simply attach the printed information.
- You may use written procedures provided by the equipment manufacturer when they meet the requirements of other chapters, including chapter 296-62 WAC, Part E, Respiratory protection.

• Emergency equipment

• Emergency response procedures

• Decontamination procedures determined by a hazardous materials specialist or other qualified individual

• Methods to critically assess the response and conduct appropriate follow-up

You must:

(2) Make your written emergency response plan available to employees, their representatives, and WISHA personnel for inspecting or copying.

Note: In situations where multiple employers could respond to an incident, all plans should consistently address:
• Who will be designated as the incident commander (IC)
AND
• If, when, and how transfer of the incident commander (IC) position will take place.

Table 1
Roles and Duties of Emergency Responders

If the employee's role is:	Then all of the following apply. They:
First responder at the awareness level	• Are likely to witness or discover a hazardous substance release • Are trained to initiate an emergency response by notifying the proper authorities of the release • Take no further action beyond notifying the authorities
First responder at the operations level	• Respond to actual or potential releases in order to protect nearby persons, property, and/or the environment from the effects of the release • Are trained to respond defensively, without trying to stop the release • May try to: - Confine the release from a safe distance - Keep it from spreading - Protect others from hazardous exposures
Hazardous materials technician	• Respond to releases or potential releases, with the intent of stopping the release • Are trained to approach the point of release offensively in order to, either: - Plug - Patch - Stop the release using other methods
Hazardous materials specialist	• Respond along with, and provide support to, hazardous materials technicians • Are required to have more specific knowledge of hazardous substances than a hazardous materials technician • Act as the site activity liaison when federal, state, local, and other government authorities participate
Incident commander	• Have ultimate responsibility for: - Direction - Control - Coordination of the response effort - Will assume control of the incident beyond the first responder awareness level
Specialist employee	• Are a technical, medical, environmental, or other type of expert • May represent a hazardous substance manufacturer, shipper, or a government agency • May be present at the scene or may assist from an off-site location • Regularly work with specific hazardous substances • Are trained in the hazards of specific substances • Are expected to give technical advice or assistance to the incident commander or incident safety officer, when requested
Skilled support personnel	• Are needed to perform an immediate, specific emergency support task at the site • Are skilled in the operation of equipment including: – Earth moving equipment – Cranes – Hoisting equipment
Incident safety officer	• Are designated by the incident commander • Are knowledgeable in operations being implemented at the site • Have specific responsibility to: – Identify and evaluate hazards – Provide direction on employee safety matters

[Statutory Authority: RCW 49.17.010, [49.17].040, [49.17].050, and [49.17].060. 02-20-034, § 296-824-20005, filed 9/24/02, effective 10/1/02.]

WAC 296-824-300 Training.

Your responsibility:

To make sure employees participating in emergency response operations are appropriately trained for their assigned roles and duties.

[Statutory Authority: RCW 49.17.010, [49.17].040, [49.17].050, and [49.17].060. 02-20-034, § 296-824-300, filed 9/24/02, effective 10/1/02.]

WAC 296-824-30005 Train your employees.

Note:
- Use Tables 3 through 6 to identify your employees' training competencies.
- You may conduct training internally, or use outside training services to comply with this section.
  - When outside trainers are hired, you are still responsible for making sure the requirements of this section are met. For example, employers may compare the course outline to the competencies listed in Tables 3 through 6.

You must:

• Make sure employees are appropriately trained for their assigned roles and duties as follows:

EXEMPTION: Skilled support employees are not covered by the training requirements in this section. (See WAC 296-824-50015.)

– Initial training:

• Provide initial training before the employee is allowed to participate in an actual emergency response operation.

Note: When first responders at the awareness or operations level have sufficient experience to objectively demonstrate competencies specified in Table 3, you may accept experience instead of training.

• Make sure initial training adequately addresses the competencies in Tables 3 through 6 and the minimum training durations in Table 2.

• Certify that employees objectively demonstrate competencies specified in Tables 3, 4 and 5 (except for employees trained as first responders at the awareness level).

– Retraining (refresher) training:

• Provide retraining annually

• Make sure retraining covers necessary content

• Document training or demonstrated competency

Note: Retraining is not required when employees demonstrate competencies annually and a record is kept of the demonstration methodology used.

– Trainer qualifications:

• Verify trainers have satisfactorily completed an instructors' training course for the subjects they teach. For example, courses offered by the United States National Academy, or equivalent courses are acceptable.

OR

• Have the educational and instructional experience necessary for training.

– Specialist employees:

• Specialist employees who have been sent to the scene to advise or assist must receive training or demonstrate competency in their specialty, annually.

Table 2
Minimum Training Durations for All Responders

If you are a:	**Then:**
First responder at the awareness level	Training duration needs to be sufficient to provide the required competencies
First responder at the operations level	You need a minimum of 8 hours training (see Table 3)
Hazardous materials technician	You need a minimum of 24 hours training (see Table 4)
Hazardous materials specialist	You need a minimum of 24 hours training (see Table 4)
Incident commander	You need a minimum of 24 hours training (see Table 5)

Table 3
Competencies for First Responders at the Awareness Level and Operations Level

Employees must be able to show they:	When they are designated as First Responders at the:	
	Awareness Level	Operations Level
Understand what hazardous substances are and their associated risks.	X	X
Recognize the presence of hazardous substances in an emergency.	X	X
Can identify the hazardous substances, when possible.	X	X
Understand the potential consequences of hazardous substances in an emergency.	X	X
Understand the role of a first responder at the awareness level as described in: • The employer's emergency response plan, including site security and control. • The United States Department of Transportation's Emergency Response Guidebook. (*search at: http://www.dot.gov*).	X	X
Can use The United States Department of Transportation's Emergency Response Guidebook.	X	X
Recognize the need for additional resources and the need to notify the incident's communication center accordingly.	X	X
Know basic hazard and risk assessment techniques.		X
Can select and use personal protective equipment (PPE) appropriate for first responder operations level.		X
Understand basic hazardous materials terms.		X

Table 3 Competencies for First Responders at the Awareness Level and Operations Level		
Can perform basic control, containment, and/or confinement operations within the capabilities of the resources and PPE available.		X
Can implement decontamination procedures to their level training.		X
Understand relevant standard operating and termination procedures.		X

Table 4 Competencies for Hazardous Materials Technicians and Hazardous Materials Specialist		
Employees must be able to show they:	When they are designated as a Hazardous Materials:	
	Technician	Specialist
Have the competencies specified for the first responder operations level. (See Table 3)	X	X
Can implement an employer's emergency response plan.	X	X
Can function within their assigned role in the incident command system.	X	X
Understand hazard and risk assessment techniques.	X	X
Understand basic chemical and toxicological terminology and behavior.	X	X
Can use field survey instruments and equipment to classify, identify, and verify materials at the incident.	X	X
Can select and use personal protective equipment (PPE) appropriate for hazardous materials technicians.	X	X
Can perform advance control, containment, and/or confinement operations within the capabilities of the resources and PPE available.	X	X
Can implement decontamination procedures to their level of training.	X	X
Understand termination procedures.	X	X
Can implement the local emergency response plan.		X
Know of the state emergency response plan.		X
Can develop a site safety and control plan.		X
Understand chemical, radiological, and toxicological terminology and behavior.		X
Understand in-depth hazard and risk techniques.		X
Can use advanced survey instruments and equipment to classify, identify and verify materials at the incident.		X
Can select and use proper specialized chemical PPE given to hazardous materials specialists.		X
Can perform specialized control, containment, and/or confinement operations within the capabilities of the resources and PPE available.		X
Can determine decontamination procedures.		X

Table 5 Competencies for Incident Commanders
Employees designated as Incident Commanders must be able to show they:
• Have competencies specified for the First Responder Operations Level. (See Table 3.)
• Know of the state emergency response plan and the Federal Regional Response Team.
• Can implement the local emergency response plan.
• Can implement the employer's emergency response plan.
• Have knowledge of the incident command system (ICS) and understand how they relate to it.
• Can implement the employer's ICS.
• Understand the hazards and risks associated with employees working in chemical protective clothing.
• Understand the importance of decontamination procedures.
Note: If the first employee arriving at the scene is not trained as an IC, they may take control of the incident within their designated role and training level.

Table 6 Competencies for Specialist Employees
Employees designated as Specialist Employees must be able to show they:
• Have current knowledge in their field regarding safety and health practices relating to the specific hazardous substances.
• Have the knowledge of the ICS and understand how they relate to it.
• Understand the care and use of personal protective equipment (PPE).

[Statutory Authority: RCW 49.17.010, [49.17].040, [49.17].050, and [49.17].060. 02-20-034, § 296-824-30005, filed 9/24/02, effective 10/1/02.]

WAC 296-824-400 Medical surveillance. Summary.

Your responsibility:

To provide and document medical surveillance for your employees.

You must:

Provide medical surveillance to employees

WAC 296-824-40005

Keep records

WAC 296-824-40010.

[Statutory Authority: RCW 49.17.010, [49.17].040, [49.17].050, and [49.17].060. 02-20-034, § 296-824-400, filed 9/24/02, effective 10/1/02.]

WAC 296-824-40005 Provide medical surveillance to employees.

You must:

(1) Provide medical surveillance for employees to comply with Tables 7 and 8, and the following:

• Make medical surveillance available at:

– Reasonable times and places.

– No cost to employees, including travel associated costs such as mileage, gas or bus fare if the employee is required to travel off site

AND

– Wages for additional time spent outside of employees normal work hours.

• Make sure a licensed physician performs or supervises exams and procedures.

• Give complete information to the examining physician including:

– A copy of this chapter.

– A description of the employee's duties that relate to hazardous substance exposure.

– The hazardous substance exposure levels anticipated for the employee.

– A description of the personal protective equipment (PPE) the employee could use.

– Information available from previous medical examinations.

– The medical evaluation information required by chapter 296-62 WAC, Part E, Respiratory protection.

• Medical exams must include, at a minimum:

– A medical history

– A work history (or updated history if on file)

– A special emphasis on:

■ Assessment of symptoms related to handling hazardous substances

■ Health hazards

■ Evaluation of fitness for duty (including the ability to wear any personal protective equipment (PPE) or other conditions that may be expected at the workplace)

– Other content as determined by the examining physician.

Note: The physician should consult the *Occupational Safety and Health Guidance Manual for Hazardous Waste Site Activities* and the *Medical Management Guidelines for Acute Chemical Exposure* (search OSHA website: http://www.osha.gov).

(2) Obtain the physician's written opinion and give a copy to the employee that includes:

• A statement of whether or not medical conditions were found which would increase the employee's risk for impairment during emergency response work or respirator use.

– Do not include specific findings or diagnoses unrelated to occupational exposures.

• Limitations recommended to the employee's assigned work, if any.

• Exam and test results if the employee requests this information.

• A statement that affirms the employee has been confidentially informed of medical exam results (including medical conditions requiring follow-up).

Table 7
Medical Surveillance for Employee Categories

If the employee is covered by this chapter and is:	Then you must:
• Exposed for at least 30 days a year to health hazards or hazardous substances at or above the permissible exposure limit or published exposure levels (even when respirators are used), **OR** • Required to wear a respirator for at least 30 days a year.*	• Offer standard medical surveillance as specified in Table 8.*
• A hazardous materials (HAZMAT) team member • A hazardous materials specialist	• Provide standard medical surveillance as specified in Table 8.
• An emergency responder who shows immediate or delayed signs or symptoms possibly resulting from exposure to hazardous substances during an incident.	• Provide incident-specific medical surveillance as specified in Table 8.
• Not an emergency responder and: – May be injured – Shows immediate or delayed signs or symptoms possibly resulting from exposure to hazardous substances – May have been exposed to hazardous substances at concentrations above the permissible exposure limits (PELs) or the published exposure levels without appropriate PPE.	• Offer incident-specific medical surveillance as specified in Table 8.

***Note:** A medical evaluation for respirator use is required by chapter 296-62 WAC, Part E, Respiratory protection, for those employees who have not been cleared for respirator use during medical surveillance activities.

Table 8 Frequency of Exams and Consultations	
If the employee is covered by:	**Then medical surveillance must include:**
• Standard medical surveillance	• Exams and consultations: – Before assignment. **Note:** If the employee is a hazardous materials (HAZMAT) team member or a hazardous materials specialist, the employee must receive a baseline physical examination. – At least once every 12 months after their initial assignment unless the physician believes a shorter, or longer interval (but no more than 24 months) is appropriate. – Whenever employees are reassigned to an area where they will no longer be covered by medical surveillance and they have not been examined within the past 6 months. – As soon as possible after an employee reports: ❖ Signs or symptoms of possible overexposure to hazardous substances or health hazards ❖ Injury ❖ Exposure above the permissible exposure limits or published exposure levels – At the termination of their employment unless they were examined within the past 6 months.
• Incident-specific medical surveillance	• Medical consultations and exams: – As soon as possible following the incident or development of signs or symptoms. – At additional times, if the physician determines follow-up is medically necessary.

[Statutory Authority: RCW 49.17.010, [49.17].040, [49.17].050, and [49.17].060. 02-20-034, § 296-824-40005, filed 9/24/02, effective 10/1/02.]

WAC 296-824-40010 Keep records.

You must:

• Keep a record of:

– Name and Social Security number of the employee receiving medical surveillance

– Physicians' written opinions, recommended limitations, and results of examinations and tests

– Any employee medical complaints regarding hazardous substance exposures

– A copy of all information given to the examining physician (except a copy of this chapter)

Note: Keep records meeting the criteria specified in chapter 296-62 WAC, Part B, Access to records, for the length of time specified in that chapter.

[Statutory Authority: RCW 49.17.010, [49.17].040, [49.17].050, and [49.17].060. 02-20-034, § 296-824-40010, filed 9/24/02, effective 10/1/02.]

WAC 296-824-500 Incident requirements. Summary.

Your responsibility:

To conduct and manage emergency response operations so employees are protected from hazardous substances and conditions.

You must:

Recognize emergencies and initiate a response

WAC 296-824-50005

Implement and maintain an incident command system (ICS)

WAC 296-824-50010

Prepare skilled support personnel

WAC 296-824-50015

Make sure the incident commander oversees activities during the response

WAC 296-824-50020

Use the buddy system in danger areas

WAC 296-824-50025

Provide rescue and medical assistance

WAC 296-824-50030.

[Statutory Authority: RCW 49.17.010, [49.17].040, [49.17].050, and [49.17].060. 02-20-034, § 296-824-500, filed 9/24/02, effective 10/1/02.]

WAC 296-824-50005 Recognize emergencies and initiate a response.

You must:

• Make sure employees follow procedures in your emergency response plan to:

– Recognize when an emergency response must be initiated

– Notify employees, and others designated in your plan, of the release

– Follow immediate emergency procedures

– Prevent the incident from increasing in severity or to secure the operation.

[Statutory Authority: RCW 49.17.010, [49.17].040, [49.17].050, and [49.17].060. 02-20-034, § 296-824-50005, filed 9/24/02, effective 10/1/02.]

WAC 296-824-50010 Implement and maintain an incident command system (ICS).

You must:

(1) Make sure a single individual, acting as the incident commander (IC), is in charge of the site-specific incident

command system (ICS) and acts within their designated role and training level.

Note:
- For multiemployer worksites:
  - The IC has responsibility for controlling emergency response operations at the site for all employers.
  - Emergency response plans should be consistent in designating who assumes the IC position.
- If the first employee arriving at the scene is not trained as an IC (see Table 5, Competencies for Incident Commanders, WAC 296-824-30005), they may take control of the incident within their designated role and training level.

(2) Make sure all employers' emergency responders and their communications are coordinated and controlled by the IC.

Note: The IC may delegate tasks to subordinates (within their training level).

(3) Make sure each employer at the scene has designated a representative to assist the IC.

(4) Establish security and control of the site as specified in your written emergency response plan.

[Statutory Authority: RCW 49.17.010, [49.17].040, [49.17].050, and [49.17].060. 02-20-034, § 296-824-50010, filed 9/24/02, effective 10/1/02.]

WAC 296-824-50015 Prepare skilled support personnel.

Note: The duties of skilled support personnel are described in Table 1, Roles and Duties of Emergency Responders.

You must:

(1) Make sure that your skilled support personnel (including those employees who are not regularly employed by you) who could be exposed to on-scene hazards are given an initial briefing at the site before they participate in any emergency response. The initial briefing must include:

- What chemical hazards are involved
- What duties are to be performed
- Instruction in the wearing of appropriate personal protective equipment

Note: Skilled support personnel do not need to comply with the other training requirements of this chapter.

(2) Make sure the safety and health precautions given to your employees are also given to skilled support personnel.

[Statutory Authority: RCW 49.17.010, [49.17].040, [49.17].050, and [49.17].060. 02-20-034, § 296-824-50015, filed 9/24/02, effective 10/1/02.]

WAC 296-824-50020 Make sure the incident commander oversees activities during the response.

The employer of the incident commander (IC) must:

(1) Identify all hazardous substances and conditions present, within their training level, using site analysis and maximum exposure limits, when appropriate.

(2) Implement emergency response procedures appropriate to the hazardous substances and conditions present, such as:

- Procedures that address the use of engineering controls, hazardous substance handling, and new technologies
- Procedures that address decontamination
- Procedures that address PPE
- Procedures that limit the number of personnel to those who are actively performing emergency response operations, in areas where exposure could exist.

(3) Designate an incident safety officer (ISO).

- Make sure the ISO demonstrates knowledge about operations being implemented at the emergency response site. They must:

– Identify and evaluate hazards

– Communicate with the IC about hazards, immediately informing the IC of corrective actions that must be taken when conditions are judged to be:

❖ An imminent danger

OR

❖ Immediately dangerous to life or health (IDLH).

– Provide direction about the safety of operations.

[Statutory Authority: RCW 49.17.010, [49.17].040, [49.17].050, and [49.17].060. 02-20-034, § 296-824-50020, filed 9/24/02, effective 10/1/02.]

WAC 296-824-50025 Use the buddy system in danger areas.

You must:

- Make sure operations and tasks (including limited actions) in danger areas are conducted using the buddy system in teams of two or more.

Definition:

Danger areas are areas where conditions pose a serious danger to employees, such as areas where:

- Immediately dangerous to life or health (IDLH) conditions could exist.

OR

- High levels of exposure to toxic substances could exist.

OR

- There is a potential for exceeding the lower explosive limit (LEL), also known as the lower flammability limit (LFL), of a hazardous substance.

[Statutory Authority: RCW 49.17.010, [49.17].040, [49.17].050, and [49.17].060. 02-20-034, § 296-824-50025, filed 9/24/02, effective 10/1/02.]

WAC 296-824-50030 Provide rescue and medical assistance.

You must:

(1) Provide stand-by employees equipped with the same level of personal protective equipment (PPE) as the entrants, for assistance or rescue.

Note:
- The buddy system applies to stand-by employees (see WAC 296-824-50025).
- One of the two stand-by employees can be assigned to another task provided it does not interfere with the performance of the stand-by role.
- Rescue equipment should be selected and provided based on the types of rescue situations that could occur.

You must:

(2) Make sure employees trained in first aid are readily available with necessary medical equipment and have a way to transport the injured.

Note:
- Employee training is covered by WAC 296-800-150, first aid. This rule requires training on the eighteen subjects listed in addition to any subjects that are specific to your workplace emergency hazards (for example: If exposure to corrosive substances could occur, training would need to include first-aid procedures for treating chemical burns).
- Employers who designate and train their employees to provide first aid are covered by chapter 296-823 WAC, Occupational exposure to bloodborne pathogens.

[Statutory Authority: RCW 49.17.010, 49.17.040, 49.17.050, and 49.17.060. 03-09-110, § 296-824-50030, filed 4/22/03, effective 8/1/03.

Statutory Authority: RCW 49.17.010, [49.17].040, [49.17].050, and [49.17].060. 02-20-034, § 296-824-50030, filed 9/24/02, effective 10/1/02.]

WAC 296-824-600 Personal protective equipment. Summary.

Your responsibility:

To provide appropriate personal protective equipment (PPE) and make sure it is used properly.

You must:

Use appropriate personal protective equipment
WAC 296-824-60005
Control hazards created by PPE
WAC 296-824-60010
Use PPE properly
WAC 296-824-60015.

[Statutory Authority: RCW 49.17.010, [49.17].040, [49.17].050, and [49.17].060. 02-20-034, § 296-824-600, filed 9/24/02, effective 10/1/02.]

WAC 296-824-60005 Personal protective equipment. Use appropriate personal protective equipment (PPE).

Note:
- Only properly trained employees should select PPE. Hazardous materials technicians and hazardous materials specialists can select PPE within the competencies specified in Table 4.
- Selection requirements in other PPE rules also apply, including:
  - WAC 296-800-160, Personal protective equipment.
  - Chapter 296-62 WAC, Part E, Respiratory protection.
  - WAC 296-24-58505, Fire brigades.
  - Chapter 296-305 WAC, Safety standards for fire fighting.

You must:

• Provide employees with appropriate PPE and make sure it is used if hazards could be present.

– Select PPE (such as respirators, gloves, protective suits and other PPE) based on:

❖ An evaluation of the performance characteristics (such as breakthrough time and hazardous substance-specificity of the material or item) relevant to the requirements and limitations of the site.

❖ Task-specific conditions and durations.

❖ The hazards and potential hazards of the site (see Table 9, Selecting PPE for Specific Hazards).

– Select totally encapsulating chemical protective (TECP) suits, as specified in Table 9, that:

❖ Maintain positive air pressure.

❖ Prevent inward test gas leakage of more than 0.5 percent.

Note: Follow the manufacturer's recommended procedure for testing a TECP suit's ability to maintain positive air pressure and prevent inward gas leakage. Other established test protocols for these suits, for example NFPA 1991 and ASTM F1052-97, may also be used.

Table 9
Selecting PPE for Specific Hazards

If:	Then:
• Inhalation hazards could be present.	• Positive-pressure (pressure-demand) self-contained breathing apparatus (SCBA) **OR** • A decreased level of respiratory protection only when the incident commander determines, from air monitoring results, that employees will be adequately protected.
Chemical exposure levels will create a substantial possibility of: • Immediate death. • Immediate serious illness or injury. • Reduced ability to escape.	Either positive-pressure (pressure-demand): • SCBA • Air-line respirators equipped with an escape air supply.
Skin absorption of a hazardous substance may result in a substantial possibility of: • Immediate death. • Immediate serious illness or injury. • Reduced ability to escape.	Protection equivalent to Level A including a totally encapsulating chemical protective (TECP) suit.

[Statutory Authority: RCW 49.17.010, [49.17].040, [49.17].050, and [49.17].060. 02-20-034, § 296-824-60005, filed 9/24/02, effective 10/1/02.]

WAC 296-824-60010 Control hazards created by personal protective equipment (PPE).

You must:

• Control hazards created by the use of PPE, including:

– Heat stress due to extremely high temperatures.

– Any other employee health hazard and consideration.

[Statutory Authority: RCW 49.17.010, [49.17].040, [49.17].050, and [49.17].060. 02-20-034, § 296-824-60010, filed 9/24/02, effective 10/1/02.]

WAC 296-824-60015 Use personal protective equipment (PPE) properly.

You must:

(1) Make sure employees inspect PPE before, during and after use, following your plan's procedures.

(2) Make sure employees put on (don) and remove (doff) PPE following your plan's procedures.

(3) Make sure employees do not interchange self-contained breathing apparatus (SCBA) air cylinders from different manufacturers, unless all of the following apply:

• There is a life-saving emergency

• You need a supplemental air supply

• The cylinders are of the same capacity and pressure rating.

(4) Make sure compressed air cylinders used with SCBAs meet the testing and service life requirements of the United States Department of Transportation (USDOT). Search at: *http://www.dot.gov*.

Note: You can also check with the cylinder manufacturers to obtain USDOT test and service life specifications.

You must:

(5) Make sure PPE is maintained in a safe and reliable condition using your plan's procedures.

PPE maintenance includes:

- Decontamination
- Cleaning
- Inspection
- Identification of damage or defects
- Parts repair or replacement
- Storage or disposal.

[Statutory Authority: RCW 49.17.010, [49.17].040, [49.17].050, and [49.17].060. 02-20-034, § 296-824-60015, filed 9/24/02, effective 10/1/02.]

WAC 296-824-700 Postemergency response.

Your responsibility:

To protect employees during postemergency response activities by following appropriate work practices, training and other requirements.

[Statutory Authority: RCW 49.17.010, [49.17].040, [49.17].050, and [49.17].060. 02-20-034, § 296-824-700, filed 9/24/02, effective 10/1/02.]

WAC 296-824-70005 Follow the appropriate postemergency response requirements.

Important:

- Postemergency response is the stage of the emergency response where the immediate threat from the release has been stabilized or eliminated, and cleanup of the site has started.
- When cleanup is done by the employees who were part of the initial emergency response, the employees are not covered by this section (however, training, PPE and other requirements in WAC 296-824-20005 through 296-824-60015 apply to these employees).

You must:

(1) Follow Table 10 to determine which requirements apply to your postemergency response activities.

(2) Maintain clean-up equipment as specified in Table 10.

Table 10
Rules that Apply to Postemergency Response Activities

When postemergency response cleanup is performed by employees who were not part of the initial emergency response and:	**The following rules or requirements apply:**
It is necessary to remove hazardous substances, health hazards and contaminated materials (example: Soil) from the site	Chapter 296-62 WAC, Part P, Hazardous waste operations and treatment, storage and disposal facilities.
Cleanup is done on plant property using plant or workplace employees **AND** It is not necessary to remove hazardous substances, health hazards and contaminated materials from the site.	For training: • WAC 296-24-567(1), Employee emergency action plans • Chapter 296-62 WAC, Part E, Respiratory protection • WAC 296-800-170, Employer chemical hazard communication • Other appropriate training requirements relevant to personal protective equipment (PPE) and decontamination For equipment: • Make sure that all equipment used for clean-up work is serviced and inspected before use.

[Statutory Authority: RCW 49.17.010, [49.17].040, [49.17].050, and [49.17].060. 02-20-034, § 296-824-70005, filed 9/24/02, effective 10/1/02.]

WAC 296-824-800 Definitions. The following definitions are specific to this chapter:

Annually

Any twelve-month cycle.

Buddy system

A system of organizing employees (who enter or stand by danger areas) into work groups, so each employee can be observed by at least one other member of the group. The purpose of this system is to provide rapid assistance to employees in an emergency.

Clean-up operation(s)

An operation where hazardous substances are removed, contained, incinerated, neutralized, stabilized, cleared up or, in any other manner, processed or handled with the goal of making the site safer for people or the environment.

Danger area

Areas where conditions pose a serious danger to employees, such as areas where:

- Immediately dangerous to life or health (IDLH) conditions could exist

OR

- High levels of exposure to toxic substances could exist

OR

- There is a potential for exceeding the lower explosive limit (LEL), also known as the lower flammability limit (LFL), of a substance.

Decontamination

Removing hazardous substances from employees and their equipment so potential adverse health effects will not occur.

Emergency response

An organized response to an anticipated release of a hazardous substance that is, or could become an uncontrolled release.

Emergency response plan

A written plan that requires coordination between emergency response participants, and contains procedures, criteria, and other information that will be applied to emergency response operations. Each employer's plan should be compatible with local and state plans.

Engineering controls

Methods of controlling employee exposures by modifying the source or reducing the quantity of contaminants.

Hazardous materials team (HAZMAT team)

A group of employees who are expected to perform responses to releases, or possible releases, of hazardous substances for the purpose of control and stabilization. As a result of their duties, HAZMAT team members may have close contact with hazardous substances.

Note: A HAZMAT team may be a separate component of a fire brigade or fire department.

Hazardous substance

Any of the following substances that could adversely affect an exposed employee's health or safety:

• Substances defined under section 101(14) of the Comprehensive Environmental Response, Compensation and Liability Act of 1980 (CERCLA) or "Superfund" Act (visit: *http://www.epa.gov*)

• Biological or other disease-causing agents released that could reasonably be expected to cause death, disease, behavioral abnormalities, cancer, genetic mutation, physiological malfunctions (including malfunctions in reproduction) or physical deformations in a person or their offspring when the person:

– Is directly exposed to the agent in the environment

– Directly ingests, inhales, or assimilates the agent from the environment

– Indirectly ingests the agent through a food chain

• Substances listed by the United States Department of Transportation as hazardous materials under Title 49 (Transportation) in the Code of Federal Regulations (CFR), Part 172, section 101 and appendices (visit: *http://www.nara.gov* and search for "List of CFR subjects")

• Hazardous wastes as defined in this chapter.

Hazardous waste

A substance designated by chapter 173-303 WAC, Dangerous waste regulations, department of ecology, as a dangerous waste or an extremely hazardous waste and any waste fitting the definition of "health hazard" in this chapter.

Note: For department of ecology regulations, visit: *http://www.ecy.wa.gov*

Health hazard

A chemical, a mixture of chemicals, or a pathogen for which there is statistically significant evidence, based on at least one study conducted according to established scientific principles, that acute or chronic health effects may occur in exposed employees.

The term "health hazard" includes stress due to temperature extremes and chemicals that are:

• Carcinogens

• Toxic or highly toxic agents

• Reproductive toxins, irritants, corrosives, sensitizers, hepatotoxins, nephrotoxins, or neurotoxins

• Agents acting on the hematopoietic system agents that damage lungs, skin, eyes, or mucous membranes. (Detailed definitions of these chemical terms can be found in the Safety and health core rules, WAC 296-800-170, chemical hazard communication.)

Incident command system (ICS)

An organized approach to control and manage operations at an emergency response incident.

Incidental release

A release that can be safely controlled at the time of the release and does not have the potential to become an uncontrolled release.

Note:

Example of a situation that results in an incidental release:

A tanker truck is receiving a load of hazardous liquid when a leak occurs. The driver knows the only hazard from the liquid is minor skin irritation. The employer has trained the driver on procedures and provided equipment to use for a release of this quantity. The driver puts on skin protection and stops the leak. A spill kit is used to contain, absorb, and pick up the spilled material for disposal.

Immediately dangerous to life or health (IDLH)

Any atmospheric condition that would:

• Cause an immediate threat to life

OR

• Cause permanent or delayed adverse health effects

OR

• Interfere with an employee's ability to escape

Limited action

Action necessary to:

• Secure an operation during emergency responses,

OR

• Prevent an incident from increasing in severity.

Examples include shutting down processes and closing emergency valves.

Lines of authority

A preestablished ranking of individuals, qualified to assume a commanding role during an emergency response, noted in an emergency response plan and implemented during a response. This is most important when responders from multiple employers could participate in an emergency response.

Lower explosive limit (LEL)

See lower flammable limit (LFL).

Lower Flammable limit (LFL)

The lowest concentration of a material that will propagate a flame. The LFL is usually expressed as a percent (by volume) of the material in air (or other oxidant).

Must

Must means mandatory.

Permissible exposure limit (PEL)

Means the established time-weighted-average (TWA) concentration or ceiling concentration of a contaminant that must not be exceeded. The exposure, inhalation, or dermal permissible limit specified in chapter 296-62 WAC, Part H, Air contaminants.

Personal protective equipment (PPE)

Protective items designed to be worn by the user to protect them against airborne, skin contact and other hazards. This includes items such as respiratory protection, protective suits, gloves, eye protection, etc.

Postemergency response

The stage of the emergency response where the immediate threat from the release has been stabilized or eliminated, and cleanup of the site has started.

Published exposure level

Exposure limits published in "*National Institute for Occupational Safety and Health* (*NIOSH*) *Recommendations for Occupational Safety and Health*" (DHHS publication #92-100, 1992).

If an exposure limit is not published by NIOSH, then "published exposure level" means the exposure limits published by the American Conference of Governmental Industrial Hygienists (ACGIH) in "*TLVs and BEIs-Threshold Limit Values for Chemical Substances and Physical Agents*" (1999 edition).

Note: Additional exposure levels published by recognized organizations such as the American Industrial Hygiene Association are not required to be observed by this rule; however, they may be a useful resource when a hazardous substance is not covered by NIOSH and ACGIH publications.

Release

A spill, leak, or other type of hazardous substance discharge.

Uncontrolled release

A release where significant safety and health risks could be created. Releases of hazardous substances that are either incidental or could not create a safety or health hazard (i.e., fire, explosion or chemical exposure) are not considered to be uncontrolled releases.

Examples of conditions that could create a significant safety and health risk:

- Large-quantity releases
- Small releases that could be highly toxic
- Potentially contaminated individuals arriving at hospitals
- Airborne exposures that could exceed a WISHA permissible exposure limit or a published exposure limit and employees are not adequately trained or equipped to control the release.

Example of an uncontrolled release:

A forklift driver knocks over a container of a solvent-based liquid, releasing the contents onto the warehouse floor. The driver has been trained to recognize the vapor is flammable and moderately toxic when inhaled. The driver has not been trained or provided appropriate equipment to address this type of spill. In this situation, it is not safe for the driver to attempt a response. The driver needs to notify someone of the release so an emergency response can be initiated.

Workplace

- A fixed facility

OR

- A temporary location (such as a traffic corridor)

OR

- Locations where employees respond to emergencies.

You

The employer. For a complete definition of "employer" see Safety and health core rules, chapter 296-800 WAC.

[Statutory Authority: RCW 49.17.010, [49.17].040, [49.17].050, and [49.17].060. 02-20-034, § 296-824-800, filed 9/24/02, effective 10/1/02.]

Chapter 296-829 WAC
HELICOPTERS USED AS LIFTING MACHINES

WAC

296-829-100	Scope.
296-829-200	Design and installation requirements for helicopters.
296-829-20005	Follow Federal Aviation Administration (FAA) requirements.
296-829-20010	Install and test hooks on helicopters correctly.
296-829-300	Maintenance.
296-829-30005	Keep landing and deposit areas safe.
296-829-30010	Follow safe refueling procedures.
296-829-400	Operating the helicopter.
296-829-40005	Hold daily briefings.
296-829-40010	Make sure employees are dressed correctly.
296-829-40015	Make sure loads are attached correctly.
296-829-40020	Make sure the load is handled correctly.
296-829-500	Definitions.

WAC 296-829-100 Scope. Chapter 296-829 WAC applies to helicopters when used to carry loads, suspended with a cargo sling, powered hoist, or other attaching methods.

Exemption: This chapter does not apply to the use of helicopters:
- In the logging industry.
- For rescue operations when a winch or hoist is used.

[Statutory Authority: RCW 49.17.010, 49.17.040, 49.17.050, and 49.17.060. 04-09-099, § 296-829-100, filed 4/20/04, effective 9/1/04.]

WAC 296-829-200 Design and installation requirements for helicopters.

Summary:

Your responsibility:

To make sure your helicopters meet design specifications and are equipped properly.

You must:

Follow Federal Aviation Administration (FAA) requirements

WAC 296-829-20005.

Install and test hooks on helicopters correctly

WAC 296-829-20010.

[Statutory Authority: RCW 49.17.010, 49.17.040, 49.17.050, and 49.17.060. 04-09-099, § 296-829-200, filed 4/20/04, effective 9/1/04.]

WAC 296-829-20005 Follow Federal Aviation Administration (FAA) requirements.

You must:

- Make sure helicopter cranes and their use meet the applicable requirements of the Federal Aviation Administration (FAA).

[Statutory Authority: RCW 49.17.010, 49.17.040, 49.17.050, and 49.17.060. 04-09-099, § 296-829-20005, filed 4/20/04, effective 9/1/04.]

WAC 296-829-20010 Install and test hooks on helicopters correctly.

You must:

- Make sure electrically operated cargo hooks are:

– Designed and installed to prevent accidental operation.

– Equipped with an emergency mechanical control to release the load.

- Make sure a competent person tests all hooks before each day's operation to make sure both the electrical and mechanical releases work properly.

[Statutory Authority: RCW 49.17.010, 49.17.040, 49.17.050, and 49.17.060. 04-09-099, § 296-829-20010, filed 4/20/04, effective 9/1/04.]

WAC 296-829-300 Maintenance.

Summary:

Your responsibility:

To keep helicopters in safe operating condition.

You must:

Keep landing and deposit areas safe

WAC 296-829-30005.

Follow safe refueling procedures

WAC 296-829-30010.

[Statutory Authority: RCW 49.17.010, 49.17.040, 49.17.050, and 49.17.060. 04-09-099, § 296-829-300, filed 4/20/04, effective 9/1/04.]

WAC 296-829-30005 Keep landing and deposit areas safe.

You must:

(1) Make sure precautions are taken to prevent loose objects from being caught in the downwash and flying around.

• Secure or remove all loose gear:

– Within one hundred feet of lift and deposit areas.

– In all other areas affected by rotor downwash.

(2) Make sure employees do not work under hovering craft, except where necessary to hook or unhook loads.

(3) Make sure safe access and exit, including an emergency escape route, is provided for employees who hook or unhook loads.

(4) Prohibit open fires in any area that could be affected by the rotor downwash.

(5) Make sure unauthorized people do not go within fifty feet of the helicopter when the rotor blades are turning.

(6) Make sure all employees:

• Stay in full view of the pilot, in a crouched position, when approaching or leaving a helicopter with rotating blades.

• Stay away from the area behind the cockpit or cabin unless the operator authorizes them to work there.

(7) Take precautions to eliminate reduced visibility.

(8) Make sure ground personnel take special care to stay clear of rotors when visibility is reduced by dust or other conditions.

[Statutory Authority: RCW 49.17.010, 49.17.040, 49.17.050, and 49.17.060. 04-09-099, § 296-829-30005, filed 4/20/04, effective 9/1/04.]

WAC 296-829-30010 Follow safe refueling procedures.

You must:

• Make sure refueling areas are safe.

– Post "NO SMOKING" signs at all entrances to the refueling area.

– Provide at least one thirty-pound fire extinguisher, or a combination totaling thirty pounds, good for class A, B, and C fires, within one hundred feet on the upwind side of the refueling operation.

Reference: For additional requirements relating to portable fire extinguishers, see WAC 296-800-300 in the safety and health core rules.

You must:

• Make sure workers involved in refueling are trained in both:

– The refueling operation;

AND

– The use of fire extinguishing equipment they may need.

• Make sure the following precautions are taken before and during refueling:

– Keep unauthorized people at least fifty feet away from the refueling operation or equipment.

– Prohibit smoking and open flames within fifty feet of the refueling area or fueling equipment.

– Make sure helicopter engines are shut down before refueling, if using aviation gasoline or jet B type fuel.

– Pump fuel, either by hand or power.

– Use self-closing nozzles or deadman controls:

■ Do not allow these to be blocked open.

– Make sure nozzles are not dragged along the ground.

– Make sure the helicopter and the fueling equipment are grounded.

– Electrically bond the fueling nozzle to the helicopter:

■ Do not use conductive hose for this bonding.

– Make sure all grounding and bonding connections are:

■ Electrically and mechanically firm.

■ On clean unpainted metal parts.

• Stop fueling **immediately** if there is a spill:

– Do not continue operation until the person in charge has determined it is safe.

[Statutory Authority: RCW 49.17.010, 49.17.040, 49.17.050, and 49.17.060. 04-09-099, § 296-829-30010, filed 4/20/04, effective 9/1/04.]

WAC 296-829-400 Operating the helicopter.

Summary:

Your responsibility:

To make sure helicopters are operated safely.

You must:

Hold daily briefings

WAC 296-829-40005.

Make sure employees are dressed correctly

WAC 296-829-40010.

Make sure loads are attached correctly

WAC 296-829-40015.

Make sure the load is handled correctly

WAC 296-829-40020.

[Statutory Authority: RCW 49.17.010, 49.17.040, 49.17.050, and 49.17.060. 04-09-099, § 296-829-400, filed 4/20/04, effective 9/1/04.]

WAC 296-829-40005 Hold daily briefings.

You must:

• Make sure the helicopter pilot and ground personnel hold a briefing before each day's operation to discuss cargo-handling plans.

[Statutory Authority: RCW 49.17.010, 49.17.040, 49.17.050, and 49.17.060. 04-09-099, § 296-829-40005, filed 4/20/04, effective 9/1/04.]

WAC 296-829-40010 Make sure employees are dressed correctly.

You must:

• Make sure employees receiving the load:

– Do NOT wear loose-fitting clothes that could snag on the hoist line.

– Wear personal protective equipment (PPE), including complete eye protection and hard hats that are secured by chin straps.

Reference: For other requirements relating to PPE, see WAC 296-800-160 in the safety and health core rules.

[Statutory Authority: RCW 49.17.010, 49.17.040, 49.17.050, and 49.17.060. 04-09-099, § 296-829-40010, filed 4/20/04, effective 9/1/04.]

WAC 296-829-40015 Make sure loads are attached correctly.

You must:

• Make sure loads are properly slung so tag lines cannot be drawn up into rotors.

• Make sure precautions are taken on all freely suspended loads to keep hand splices from spinning open or cable clamps from loosening, such as using pressed sleeves or swedged eyes.

• Make sure the weight of the load does not exceed the manufacturer's load ratings.

• Make sure hoist wires and other gear are **not** attached to or allowed to catch on any fixed structure.

Exemption: This requirement does not apply to pulling lines or conductors that "pay out" from a container or reel.

[Statutory Authority: RCW 49.17.010, 49.17.040, 49.17.050, and 49.17.060. 04-09-099, § 296-829-40015, filed 4/20/04, effective 9/1/04.]

WAC 296-829-40020 Make sure the load is handled correctly.

You must:

• Make sure signal systems, whether radio or hand signals, are checked before hoisting the load:

– When using hand signals, use those shown in Figure 1.

• Make sure workers on the ground do **either** of the following before touching the suspended load:

– Use a ground device to safely discharge any static charge;

OR

– Put on and wear rubber gloves.

• Make sure there are enough employees for safe loading and unloading operations.

• Make sure constant communications are maintained between the pilot and signal person:

– The signal person must be distinctly recognizable from other ground personnel.

HELICOPTER HAND SIGNALS

Left arm extended horizontally; right arm sweeps upward to position over.

The signal "Hold" is executed by placing arms over head with clenched fists.

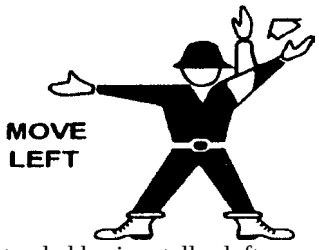

Right arm extended horizontally; left sweeps upward to position over head.

Right hand behind back; left hand pointing up.

Combination of arm and hand movement in a collecting motion pulling toward head.

Arms crossed in front of body and pointing downward.

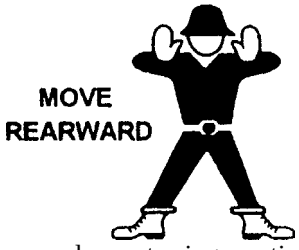

Hands above arm, palms out using a noticeable showing motion.

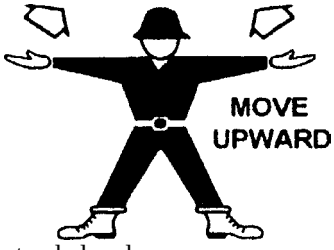

Arms extended, palms up; arms sweeping up.

Left arm held down away from body. Right arm cuts across left arm in a slashing movement from above.

Arms extended, palms down; arms sweeping down.

[Statutory Authority: RCW 49.17.010, 49.17.040, 49.17.050, and 49.17.060. 04-09-099, § 296-829-40020, filed 4/20/04, effective 9/1/04.]

WAC 296-829-500 Definitions.

Aviation gasoline

Gasoline fuel for reciprocating piston engine helicopters, also known as avgas.

Cargo hook

A device attached to a helicopter that is used to hold suspended loads.

Competent person

One who is capable of identifying existing and predictable hazards in the surroundings, or working conditions which are unsanitary, hazardous, or dangerous to employees, and who has authorization to take prompt corrective measures to eliminate them.

Deadman controls

A control, switch or device that will automatically shut off whenever the operator releases it.

Deposit area

An area that is designated for dropping off and picking up suspended loads.

Downwash

The wind created by the rotating blades of a helicopter.

Ground device

A device used to dissipate the static electricity charge that has built up on a suspended load.

Helicopter crane

A helicopter that carries cargo or equipment suspended underneath it.

Jet A type fuel

A kerosene grade fuel suitable for helicopters with turbine engines.

Jet B type fuel

A blend of gasoline and kerosene fuel.

Powered hoist

A powered device designed to lift and lower equipment and cargo.

Tag line

A line or rope used to control suspended loads that can swing freely.

[Statutory Authority: RCW 49.17.010, 49.17.040, 49.17.050, and 49.17.060. 04-09-099, § 296-829-500, filed 4/20/04, effective 9/1/04.]

Chapter 296-832 WAC

LATE NIGHT RETAIL WORKER CRIME PREVENTION

WAC

296-832-100	Scope.
296-832-200	Training.
296-832-20005	Provide crime prevention training to your employees.
296-832-20010	Provide crime prevention retraining to your employees annually.
296-832-300	Store safety.
296-832-30005	Have a safe in your store.
296-832-30010	Post a notice about your store's safe and cash register.
296-832-30015	Provide outside lighting.

WAC 296-832-100 Scope. This rule applies to all retail businesses operating between the hours of 11:00 p.m. and 6:00 a.m.

Exemption: This chapter does not apply to restaurants, hotels, taverns, and lodging facilities.

[Statutory Authority: RCW 49.17.010, [49.17].040, [49.17].050, and [49.17].060. 02-16-087, § 296-832-100, filed 8/7/02, effective 10/1/02.]

WAC 296-832-200 Training.

SUMMARY

Your responsibility:

To make sure all employees receive crime prevention training as part of your accident prevention program.

You must:

Provide crime prevention training to your employees

WAC 296-832-20005

Provide crime prevention retraining to your employees annually

WAC 296-832-20010.

[Statutory Authority: RCW 49.17.010, [49.17].040, [49.17].050, and [49.17].060. 02-16-087, § 296-832-200, filed 8/7/02, effective 10/1/02.]

WAC 296-832-20005 Provide crime prevention training to your employees.

Note: These training requirements apply only to employees working any time during the hours of 11:00 p.m. to 6:00 a.m. This training must be conducted prior to the employee working this time period.

You must:

• Provide crime prevention training as part of your accident prevention program.

– Make sure you have instructed your employees on the purpose and function of robbery and violence prevention to provide them with the knowledge and skills required to maintain their personal safety.

• Provide training and training materials that outline your company's:

– Security policies

– Safety and security procedures

– Personal safety and crime prevention techniques.

• Provide formal instruction about crime prevention through a training seminar or training video presentation that includes these topics:

– How keeping the store clean, neat and uncluttered discourages potential robbers

– Why the cash register should be kept in plain view from outside the store, if your store layout allows

– Reasons for operating your business with only a minimum number of cash registers at night

– Reasons for keeping cash register funds to a minimum

– How to take extra precautions after dark such as ways to keep alert, making sure appropriate lights are on, inspecting dark corners, and identifying possible hiding places for robbers

– Violence prevention procedures in case of a robbery.

• Have employees sign a statement indicating the date, time, and place they received their crime prevention training.

• Keep a record of this information readily available for review when requested by the department of labor and industries.

Note: Employers may keep electronic records of employee training and verification.

• Have a videotape or other materials about crime prevention available to all employees at their request.

[Statutory Authority: RCW 49.17.010, [49.17].040, [49.17].050, and [49.17].060. 02-16-087, § 296-832-20005, filed 8/7/02, effective 10/1/02.]

WAC 296-832-20010 Provide crime prevention retraining to your employees annually.

You must:

• Provide a refresher course in crime prevention training annually.

[Statutory Authority: RCW 49.17.010, [49.17].040, [49.17].050, and [49.17].060. 02-16-087, § 296-832-20010, filed 8/7/02, effective 10/1/02.]

WAC 296-832-300 Store safety.

SUMMARY

Your responsibility:

To take certain safety measures to discourage crime in your store.

You must:

Have a safe in your store

WAC 296-832-30005

Post a notice about your store's safe and cash register

WAC 296-832-30010

Provide outside lighting

WAC 296-832-30015.

[Statutory Authority: RCW 49.17.010, [49.17].040, [49.17].050, and [49.17].060. 02-16-087, § 296-832-300, filed 8/7/02, effective 10/1/02.]

WAC 296-832-30005 Have a safe in your store.

You must:

• Have a drop-safe, limited access safe, or comparable device in your store.

[Statutory Authority: RCW 49.17.010, [49.17].040, [49.17].050, and [49.17].060. 02-16-087, § 296-832-30005, filed 8/7/02, effective 10/1/02.]

WAC 296-832-30010 Post a notice about your store's safe and cash register.

You must:

• Post a notice in an obvious place on a window or door stating:

– There is a safe in the store

– Employees have no access to the safe

– The cash register contains only enough cash to do business.

Notes:

• You will not be cited by WISHA for having money in the cash register over the minimal amount needed to do business.

• All displays and other materials posted in the window(s) or door(s) should be arranged to provide an unobstructed view of the cash register if it is visible from the street.

[Statutory Authority: RCW 49.17.010, [49.17].040, [49.17].050, and [49.17].060. 02-16-087, § 296-832-30010, filed 8/7/02, effective 10/1/02.]

WAC 296-832-30015 Provide outside lighting.

You must:

• Light the store's approach area and parking lot during all night hours your business is open.

Note: You can do this by:

– Providing surveillance lighting to observe pedestrian and vehicle entrances

– Providing lighting of a minimum of one foot candle to comply with ANSI/IES RP7-1983. Lighting levels can be measured with a light meter; for comparison purposes 1 foot-candle = 1 lumen incident per square foot = 10.76 lux.

[Statutory Authority: RCW 49.17.010, [49.17].040, [49.17].050, and [49.17].060. 02-16-087, § 296-832-30015, filed 8/7/02, effective 10/1/02.]

Chapter 296-833 WAC
TEMPORARY HOUSING FOR WORKERS

WAC

296-833-100	Scope.
296-833-10010	Summary.
296-833-200	Shelter location and structure requirements.
296-833-20005	Provide and maintain sufficient grounds and open areas in temporary housing sites.
296-833-20010	Follow these design and equipment requirements for shelters.
296-833-300	Utilities employers must provide.
296-833-30005	Provide electricity and lighting to temporary housing areas.

296-833-30010	Provide adequate water.
296-833-30015	Provide toilet facilities.
296-833-30020	Follow local regulations for sewage disposal.
296-833-400	Service facilities: Food preparation, dining, bathing, laundry and handwashing.
296-833-40005	Provide service buildings for laundry, handwashing and bathing.
296-833-40010	Provide cooking, food-handling, and dining facilities.
296-833-500	Waste disposal and pest control.
296-833-50005	Follow proper waste disposal procedures.
296-833-50010	Control insects, rodents, and other pests.
296-833-600	Employee first aid and communicable disease reporting.
296-833-60005	Provide first-aid facilities.
296-833-60010	Report communicable diseases.

WAC 296-833-100 Scope. This chapter applies to all employers who provide or require their employees to live in temporary housing.

Exemption:

This rule does not apply to the agriculture industry.

For agriculture employers, see WAC 296-307-161, Temporary worker housing, and WAC 296-307-163, Cherry harvest camps.

[Statutory Authority: RCW 49.17.010, 49.[17.]040, 49.[17.]050, and 49.[17.]060. 02-23-073, § 296-833-100, filed 11/19/02, effective 1/1/03.]

WAC 296-833-10010 Summary.

Your responsibility:

If you choose to provide temporary housing for workers, or require them to live on the grounds in housing they provide themselves, you must make sure the housing facilities meet the requirements of this rule.

[Statutory Authority: RCW 49.17.010, 49.[17.]040, 49.[17.]050, and 49.[17.]060. 02-23-073, § 296-833-10010, filed 11/19/02, effective 1/1/03.]

WAC 296-833-200 Shelter location and structure requirements.

Summary.

Your responsibility:

To provide and maintain safe and healthful housing for your temporary workers.

You must:

Provide and maintain sufficient grounds and open areas in temporary housing sites

WAC 296-833-20005

Follow these design and equipment requirements for shelters

WAC 296-833-20010.

[Statutory Authority: RCW 49.17.010, 49.[17.]040, 49.[17.]050, and 49.[17.]060. 02-23-073, § 296-833-200, filed 11/19/02, effective 1/1/03.]

WAC 296-833-20005 Provide and maintain sufficient grounds and open areas in temporary housing sites.

You must:

(1) Make sure that all temporary housing sites:

• Are adequately drained and are free from ground depressions in which water may accumulate

• Have no history of flooding

• Do not endanger any domestic or public water supply with their drainage

• Are located at least two hundred feet from a swamp, pool, sink hole, or other surface collection of water unless the water surface can be treated for mosquito control.

(2) Make sure the housing area is large enough to prevent the buildings from being crowded too closely together.

(3) Make sure the principal housing areas for sleeping and food preparation/eating are at least five hundred feet from livestock operations.

Note: Livestock operations include, among other things, dairy farms, corrals, slaughterhouses, feedlots, and stockyards. Operations where livestock can roam on a pasture over a distance may be treated as outside the definition.

(4) Make sure that grounds and open areas surrounding the shelters are maintained in a clean and sanitary condition.

[Statutory Authority: RCW 49.17.010, 49.[17.]040, 49.[17.]050, and 49.[17.]060. 02-23-073, § 296-833-20005, filed 11/19/02, effective 1/1/03.]

WAC 296-833-20010 Follow these design and equipment requirements for shelters.

You must:

(1) Make sure that every shelter in the camp provides protection against the elements.

(2) Make sure each dwelling unit:

• Has at least seventy square feet of floor space for the first occupant and at least fifty square feet of floor space for each additional occupant

• That is designated a family unit has a separate sleeping area for children over six years old

• With designated sleeping room(s) has at least fifty square feet of floor space in the sleeping room for each occupant

• Has at least a seven-foot ceiling

• Has windows:

– Covering a total area equal to at least one-tenth of the floor area

AND

– At least one-half of which can be opened for ventilation

• Has each exterior opening screened with 16-mesh material

• Has screen doors with self-closing devices.

(3) Make sure that the floors of each shelter are constructed of wood, asphalt, or concrete.

• Floors must be kept in good repair

• If wooden floors are used, they must be:

– Elevated one foot above ground level at all points to prevent dampness and to permit free air circulation

– Smooth and tight.

Note: You may "bank" around outside walls with earth or other suitable material to guard against extreme low temperatures.

(4) Provide beds, cots, or bunks, and suitable storage facilities such as wall lockers for clothing and personal articles in every sleeping room.

• Beds must be at least thirty-six inches away from other beds, both side to side and end to end

• The frame of the bed must keep mattresses at least twelve inches off the floor

• Double-deck bunks must be spaced at least forty-eight inches away from other beds, both side to side and end to end

• The minimum clear space between lower and upper bunks must be at least twenty-seven inches

• Triple-deck bunks are not allowed.

(5) Provide equipment that adequately heats the living area whenever the camp is used during cold weather.

Note: All heating, cooking, and water heating equipment must meet state and local ordinances, codes, and regulations concerning installation.

[Statutory Authority: RCW 49.17.010, 49.[17.]040, 49.[17.]050, and 49.[17.]060. 02-23-073, § 296-833-20010, filed 11/19/02, effective 1/1/03.]

WAC 296-833-300 Utilities employers must provide.

Summary.

Your responsibility:

To provide utilities to your temporary housing camps.

You must:

Provide electricity and lighting to temporary housing areas

WAC 296-833-30005

Provide adequate water

WAC 296-833-30010

Provide toilet facilities

WAC 296-833-30015

Follow local regulations for sewage disposal

WAC 296-833-30020.

[Statutory Authority: RCW 49.17.010, 49.[17.]040, 49.[17.]050, and 49.[17.]060. 02-23-073, § 296-833-300, filed 11/19/02, effective 1/1/03.]

WAC 296-833-30005 Provide electricity and lighting to temporary housing areas.

You must:

(1) Supply electricity to all:

– Dwelling units

– Kitchen facilities

– Shower/bathroom facilities

– Common areas

– Laundry facilities.

Reference:

You need to follow additional requirements for electricity and lighting. See WAC 296-800-280, Basic electrical rules, in the safety and health core rules book for more information.

(2) Provide lighting to camp buildings.

• Make sure general lighting and task lighting are adequate for normal daily activities

• Make sure living quarters have:

– One ceiling-type light fixture

AND

– One separate floor or wall convenience outlet.

• Make sure laundry rooms, toilet rooms, and other common areas have at least:

– One ceiling light fixture

OR

– A wall light fixture.

[Statutory Authority: RCW 49.17.010, 49.[17.]040, 49.[17.]050, and 49.[17.]060. 02-23-073, § 296-833-30005, filed 11/19/02, effective 1/1/03.]

WAC 296-833-30010 Provide adequate water.

You must:

• Provide a water supply that is adequate and convenient for:

– Drinking

– Cooking

– Bathing

– Laundry purposes.

• Make sure the water supply system is:

– Capable of delivering

■ Thirty-five gallons per person per day to the campsite

■ At a peak rate of two and one-half times the average hourly demand

– Able to supply water to all fixtures at the same time with normal operating pressures

– Approved by the appropriate health authority

• Supply water to each housing area by either:

– Piping water directly to the shelters

– Providing yard hydrants within one hundred feet of the shelters

• Prohibit common drinking cups

• Provide one or more drinking fountain(s) for each one hundred occupants (or fraction of that number) where water under pressure is available.

Reference:

The construction of drinking fountains must comply with ANSI standard Specifications for Drinking Fountains, Z4.2.1942.

[Statutory Authority: RCW 49.17.010, 49.[17.]040, 49.[17.]050, and 49.[17.]060. 02-23-073, § 296-833-30010, filed 11/19/02, effective 1/1/03.]

WAC 296-833-30015 Provide toilet facilities.

Note: For the purposes of this rule, a restroom is a room maintained on the premises for use by employees that contains a toilet. This includes outhouses.

You must:

(1) Provide enough toilets for the camp's capacity.

• Toilets and outhouses must be provided in a ratio of one for every fifteen people, with a minimum of two units for any facility shared by men and women.

Note: Check with your local jurisdictions for regulations regarding outhouses.

(2) Have enough rest rooms for each sex based on the maximum number of persons the camp is designed to house at any one time.

(3) Provide separate rest rooms for each sex wherever rest rooms are in buildings shared by men and women.

• Distinctly mark the rooms "men" and "women" with:

– Signs printed in English and in the native language of the persons occupying the camp

OR

– Easily understood pictures or symbols.

• If the facilities for each sex are in the same building, they must be separated by:

– Solid walls

OR

– Partitions extending from the floor to the roof or ceiling.

(4) Make sure:

• No one has to pass through a sleeping room to reach a rest room

• Rest rooms have a window of at least six square feet opening directly to the outside, or are satisfactorily ventilated

• All outside openings are screened with 16-mesh material

• Fixtures, toilets, chemical toilets, or urinals are not located in a room used for other than toilet purposes

• A rest room is within two hundred feet of the door of each sleeping room

• Any outhouse is at least one hundred feet away from any sleeping room, dining room, lunch area, or kitchen.

(5) Provide urinals as follows:

• One urinal or two linear feet of urinal trough for each twenty-five men

• Construct the floor out of materials that are moisture proof, from the wall and out at least fifteen inches from the outer edge of the urinals

• Have an adequate water flush in urinals when water under pressure is available

• Urinal troughs in outhouses must:

– Drain freely into the pit or vault

AND

– Have a drain constructed to exclude flies and rodents from the pit.

(6) Install any new toilets in a rest room.

(7) Make sure:

• There is an adequate supply of toilet paper for each rest room, outhouse, or chemical toilet

• Toilet facilities are:

– Kept in sanitary condition

AND

– Cleaned at least daily.

[Statutory Authority: RCW 49.17.010, 49.[17.]040, 49.[17.]050, and 49.[17.]060. 02-23-073, § 296-833-30015, filed 11/19/02, effective 1/1/03.]

WAC 296-833-30020 Follow local regulations for sewage disposal.

You must:

• Provide sewage disposal systems according to local health jurisdictions.

[Statutory Authority: RCW 49.17.010, 49.[17.]040, 49.[17.]050, and 49.[17.]060. 02-23-073, § 296-833-30020, filed 11/19/02, effective 1/1/03.]

WAC 296-833-400 Service facilities: Food preparation, dining, bathing, laundry and handwashing.

Summary.

Your responsibility:

To provide facilities for your employees to cook, eat, do laundry, bathe, and wash their hands.

You must:

Provide service buildings for laundry, handwashing and bathing

WAC 296-833-40005

Provide cooking, food-handling, and dining facilities

WAC 296-833-40010.

[Statutory Authority: RCW 49.17.010, 49.[17.]040, 49.[17.]050, and 49.[17.]060. 02-23-073, § 296-833-400, filed 11/19/02, effective 1/1/03.]

WAC 296-833-40005 Provide service buildings for laundry, handwashing and bathing.

You must:

(1) Make sure that every service building has equipment capable of maintaining a room temperature of at least seventy degrees Fahrenheit.

(2) Make sure an adequate supply of hot and cold running water is provided for bathing and laundry purposes.

(3) Provide:

• One handwash basin

– Per family shelter

OR

– Per six persons in shared facilities

• One shower head for every ten persons

• One laundry tray or tub for every thirty persons

• One "deepwell" type sink in each building used for laundry, handwashing, and bathing.

(4) Make sure all:

• Laundry, handwashing and bathing room floors:

– Are moisture-resistant and smooth but not slippery

– Have coved junctions of the curbing and the floor

• Walls and partitions of shower rooms are smooth and moisture-resistant to the height where water splashes.

• Shower baths, shower rooms, or laundry rooms have floor drains to remove wastewater and facilitate cleaning.

(5) Provide facilities for drying clothes.

(6) Keep all service buildings clean.

[Statutory Authority: RCW 49.17.010, 49.[17.]040, 49.[17.]050, and 49.[17.]060. 02-23-073, § 296-833-40005, filed 11/19/02, effective 1/1/03.]

WAC 296-833-40010 Provide cooking, food-handling, and dining facilities.

You must:

(1) Make sure common cooking and dining areas are of adequate size and are separated from sleeping areas by a door.

(2) Provide enclosed and screened cooking and food-handling facilities for all occupants. The facilities must include:

• A working cook stove or hot plate with at least one cooking surface for every two occupants

• A sink with hot and cold running potable water under pressure

• Food storage areas located off the floor

• Nonabsorbent, easily cleanable food preparation counters

• Mechanical refrigeration capable of maintaining a temperature of forty-five degrees Fahrenheit or below, with enough space to store perishable food items for all occupants

• Fire-resistant, nonabsorbent, nonasbestos, and easily cleanable wall coverings close to cooking areas

• Nonabsorbent, easily cleanable floors

• At least one ceiling or wall light fixture

• Lighting adequate for normal food preparation activities

• Adequate ventilation for cooking facilities.

(3) Make sure that dining halls:

• Meet the requirements of the department of health's rules in chapter 246-215 WAC, Food service

• Have no direct openings to living or sleeping areas

• Have fire-resistant, nonabsorbent, nonasbestos, and easy-to-clean wall coverings adjacent to cooking areas

• Have nonabsorbent, easy-to-clean floors

• Have at least one ceiling or wall light fixture

• Have lighting adequate for normal dining activities.

[Statutory Authority: RCW 49.17.010, 49.[17.]040, 49.[17.]050, and 49.[17.]060. 02-23-073, § 296-833-40010, filed 11/19/02, effective 1/1/03.]

WAC 296-833-500 Waste disposal and pest control.

Summary.

Your responsibility:

To make sure your temporary housing camps are kept sanitary.

You must:

Follow proper waste disposal procedures
WAC 296-833-50005
Control insects, rodents, and other pests
WAC 296-833-50010.

[Statutory Authority: RCW 49.17.010, 49.[17.]040, 49.[17.]050, and 49.[17.]060. 02-23-073, § 296-833-500, filed 11/19/02, effective 1/1/03.]

WAC 296-833-50005 Follow proper waste disposal procedures.

You must:

• Provide at least one garbage container for each family shelter. Garbage containers must be:

– Placed on a wooden, metal, or concrete pad

AND

– Located within one hundred feet of each shelter.

• Provide garbage containers that:

– Are nonabsorbent

– Are cleanable **OR** only used once (for example, a disposable plastic liner)

– Can be securely closed.

• Make sure garbage containers are kept clean and emptied:

– At least twice a week

AND

– When full.

[Statutory Authority: RCW 49.17.010, 49.[17.]040, 49.[17.]050, and 49.[17.]060. 02-23-073, § 296-833-50005, filed 11/19/02, effective 1/1/03.]

WAC 296-833-50010 Control insects, rodents, and other pests.

You must:

• Take steps to effectively prevent insects, rodents, and other pests from infesting camp areas

• Carry out a continuing and effective control program where pests have been detected.

[Statutory Authority: RCW 49.17.010, 49.[17.]040, 49.[17.]050, and 49.[17.]060. 02-23-073, § 296-833-50010, filed 11/19/02, effective 1/1/03.]

WAC 296-833-600 Employee first aid and communicable disease reporting.

Summary.

Your responsibility:

To guard the general health of your employees by providing first-aid facilities and reporting communicable diseases.

You must:

Provide first-aid facilities
WAC 296-833-60005
Report communicable diseases
WAC 296-833-60010.

[Statutory Authority: RCW 49.17.010, 49.[17.]040, 49.[17.]050, and 49.[17.]060. 02-23-073, § 296-833-600, filed 11/19/02, effective 1/1/03.]

WAC 296-833-60005 Provide first-aid facilities.

You must:

• Provide and maintain adequate first-aid facilities

AND

• Make sure a person trained in first aid is in charge of the first-aid facilities.

Reference:

See WAC 296-800-150, First aid, in the core rules book for requirements for first-aid training and supplies.

[Statutory Authority: RCW 49.17.010, 49.[17.]040, 49.[17.]050, and 49.[17.]060. 02-23-073, § 296-833-60005, filed 11/19/02, effective 1/1/03.]

WAC 296-833-60010 Report communicable diseases.

You must:

• Immediately report to the local health officer:

– The name and address of any individual in the camp known to or suspected of having a communicable disease listed in the department of health's list of notifiable conditions, chapter 246-101 WAC

– Any suspected food poisoning

– Any unusual occurrence of:

• Fever

• Diarrhea

• Sore throat

• Vomiting

• Jaundice.

[Statutory Authority: RCW 49.17.010, 49.[17.]040, 49.[17.]050, and 49.[17.]060. 02-23-073, § 296-833-60010, filed 11/19/02, effective 1/1/03.]

Chapter 296-835 WAC

DIPPING AND COATING OPERATIONS (DIP TANKS)

WAC

296-835-100 Scope.
296-835-110 General requirements.

CONSTRUCTION

296-835-11005 Construct safe dip tanks.

VENTILATION

296-835-11010 Provide proper ventilation for the vapor area.
296-835-11015 Take additional precautions if you recirculate ventilation system exhaust air into the workplace.
296-835-11020 Take additional precautions when using an exhaust hood.

INSPECTION

296-835-11025 Periodically inspect your dip tanks and associated equipment and correct any deficiencies.

FIRST AID

296-835-11030 Make sure employees working near dip tanks know appropriate first-aid procedures.

CLEANING

296-835-11035 Prepare dip tanks before cleaning.

CYANIDE

296-835-11040 Safeguard cyanide tanks.

WELDING

296-835-11045 Protect employees during welding, burning, or other work using open flames.

LIQUIDS HARMFUL TO SKIN

296-835-11050 Protect employees that use liquids that may burn, irritate, or otherwise harm the skin.
296-835-120 Additional requirements for dip tanks using flammable or combustible liquids.

CONSTRUCTION

296-835-12005 Include additional safeguards when constructing dip tanks.

296-835-12010 Provide overflow pipes.
296-835-12015 Provide bottom drains.

FIRE PROTECTION

296-835-12020 Provide fire protection in the vapor area.
296-835-12025 Provide additional fire protection for large dip tanks.

ELECTRICAL WIRING AND EQUIPMENT AND SOURCES OF IGNITION

296-835-12035 Prevent static electricity sparks or arcs when adding liquids to a dip tank.
296-835-12040 Control ignition sources.
296-835-12045 Provide safe electrical wiring and equipment where the liquid can drip or splash.

HOUSEKEEPING

296-835-12050 Keep the area around dip tanks clear of combustible material and properly dispose of waste.

HEATING LIQUID

296-835-12055 Make sure heating the liquid in your dip tanks does not cause a fire.

HEAT DRYING

296-835-12060 Make sure a heating system used for drying objects does not cause a fire.

CONVEYORS

296-835-12065 Make sure conveyor systems are safe.
296-835-130 Additional requirements for dip tanks used for specific processes.

HARDENING OR TEMPERING

296-835-13005 Meet specific requirements if you use a hardening or tempering tank.

ELECTROSTATIC EQUIPMENT

296-835-13010 Meet specific requirements if you use electrostatic equipment.

FLOW COATING

296-835-13015 Meet specific requirements if you use a flow coating process.

ROLL COATING

296-835-13020 Take additional precautions if your roll coating operation uses a liquid that has a flashpoint below 140°F (60°C).

VAPOR DEGREASING

296-835-13025 Provide additional safeguards for vapor degreasing tanks.

SPRAY CLEANING OR DEGREASING

296-835-13030 Control liquid spray over an open surface cleaning or degreasing tank.
296-835-140 Definitions.

WAC 296-835-100 Scope.

IMPORTANT:

A **dip tank** is a container holding a liquid other than plain water that is used for dipping or coating. An object may be completely or partially immersed (in a dip tank) or it may be suspended in a vapor coming from the tank.

Exemption: Dip tanks that use a molten material (molten metal, alloy, salt, etc.) are not covered by this chapter.

This chapter **applies** to:

• A dip tank that uses a liquid other than plain water, or the vapor of the liquid, to:

– Clean an object
– Coat an object
– Alter the surface of an object

OR

– Change the character of an object.

• Draining or drying an object that has been dipped or coated.

Examples of covered dipping and coating operations include, but are not limited to:

– Paint dipping
– Electroplating
– Anodizing
– Pickling
– Quenching
– Tanning
– Degreasing
– Stripping
– Cleaning
– Dyeing
– Flow coating
– Roll coating.

Reference: You have to do a hazard assessment to identify hazards or potential hazards in your workplace and determine if PPE is necessary to protect your employees. See personal protective equipment (PPE), WAC 296-800-160, in the core rules, chapter 296-800 WAC.

[Statutory Authority: RCW 49.17.010, [49.17].040, and [49.17].050. 02-15-102, § 296-835-100, filed 7/17/02, effective 10/1/02.]

WAC 296-835-110 General requirements. Summary.

Your responsibility:

Safeguard employees working with dip tanks.

You must:

CONSTRUCTION

Construct safe dip tanks
WAC 296-835-11005

VENTILATION

Provide proper ventilation for the vapor area
WAC 296-835-11010

Take additional precautions if you recirculate ventilation system exhaust air into the workplace
WAC 296-835-11015

Take additional precautions when using an exhaust hood
WAC 296-835-11020

INSPECTION

Periodically inspect your dip tanks and associated equipment and correct any deficiencies
WAC 296-835-11025

FIRST AID

Make sure employees working near dip tanks know appropriate first-aid procedures
WAC 296-835-11030

CLEANING

Prepare dip tanks before cleaning
WAC 296-835-11035

CYANIDE

Safeguard cyanide tanks
WAC 296-835-11040

WELDING

Protect employees during welding, burning or other work using open flames
WAC 296-835-11045

LIQUIDS HARMFUL TO SKIN

Provide additional protection for employees working near dip tanks that use liquid that may burn, irritate, or otherwise harm the skin

WAC 296-835-11050.

[Statutory Authority: RCW 49.17.010, [49.17].040, and [49.17].050. 02-15-102, § 296-835-110, filed 7/17/02, effective 10/1/02.]

CONSTRUCTION

WAC 296-835-11005 Construct safe dip tanks.

You must:

• Make sure dip tanks, including any drain boards, are strong enough to support the expected load.

[Statutory Authority: RCW 49.17.010, [49.17].040, and [49.17].050. 02-15-102, § 296-835-11005, filed 7/17/02, effective 10/1/02.]

VENTILATION

WAC 296-835-11010 Provide proper ventilation for the vapor area.

You must:

• Make sure mechanical ventilation meets the requirements of one or more of the following standards:

– NFPA 34-1995, Standard for Dipping and Coating Processes Using Flammable or Combustible Liquids

– ACGIH's "Industrial Ventilation: A Manual of Recommended Practice" (22nd ed., 1995)

– ANSI Z9.1-1971, Practices for Ventilation and Operation of Open-Surface Tanks and ANSI Z9.2-1979, Fundamentals Governing the Design and Operation of Local Exhaust Systems.

Note: Some, or all, of the consensus standards (such as ANSI and NFPA) may have been revised. If you comply with a later version of a consensus standard, you will be considered to have complied with any previous version of the same consensus standard.

You must:

• Limit the vapor area to the smallest practical space by using mechanical ventilation.

• Keep airborne concentration of any substance below twenty-five percent of its lower flammable limit (LFL).

• Make sure mechanical ventilation draws the flow of air into a hood or exhaust duct.

• Have a separate exhaust system for each dip tank if the combination of substances being removed could cause a:

– Fire

– Explosion

OR

– Potentially hazardous chemical reaction.

Reference: You need to keep employee exposure within safe levels when the liquid in a dip tank creates an exposure hazard. See Air contaminants, WAC 296-62-075 through 296-62-07515.

Note: You may use a tank cover or material that floats on the surface of the liquid to replace or assist ventilation. The method or combination of methods you choose has to maintain the airborne concentration of the hazardous material and the employee's exposure within safe limits.

[Statutory Authority: RCW 49.17.010, [49.17].040, and [49.17].050. 02-15-102, § 296-835-11010, filed 7/17/02, effective 10/1/02.]

WAC 296-835-11015 Take additional precautions if you recirculate ventilation system exhaust air into the workplace.

You must:

• Only recirculate air that contains no substance at a concentration that could pose a health or safety hazard to employees.

• Make sure any exhaust system that recirculates air into the workplace:

– Passes the air through a device that removes contaminants

– Sounds an alarm and automatically shuts down the dip tank operation, if the vapor concentration of any substance in the exhaust air exceeds twenty-five percent of its LFL

– Monitors the concentration of vapor from flammable or combustible liquids with approved equipment.

Note:
• The LFL concentration in the air must be determined after the air passes through the air-cleaning device and before the air reenters the workspace.
• Most substances will pose a health hazard at a concentration far below twenty-five percent of its LFL.

[Statutory Authority: RCW 49.17.010, [49.17].040, and [49.17].050. 02-15-102, § 296-835-11015, filed 7/17/02, effective 10/1/02.]

WAC 296-835-11020 Take additional precautions when using an exhaust hood.

You must:

• Make sure each room with an exhaust hood has a source of outside air that:

– Enters the room in a way that will not interfere with the function of the hood

– Replaces at least ninety percent of the air taken in through the hood.

[Statutory Authority: RCW 49.17.010, [49.17].040, and [49.17].050. 02-15-102, § 296-835-11020, filed 7/17/02, effective 10/1/02.]

INSPECTION

WAC 296-835-11025 Periodically inspect your dip tanks and associated equipment and correct any deficiencies.

You must:

• Inspect or test your dip tanks and associated equipment periodically, including:

– Covers

– Overflow pipes

– Bottom drains and valves

– Electrical wiring, equipment, and grounding connections

– Ventilating systems

– Fire extinguishing equipment

• Inspect the hoods and ductwork of the ventilation system for corrosion and damage and make sure the airflow is adequate:

– At least quarterly during operation

– Prior to operation after a prolonged shutdown

• Promptly fix any deficiencies found.

Note:
• To assist you in tracking your inspections and actions taken from those inspections, you may want to keep a written record.
• It is recommended that inspections be at least quarterly even if the system is not operating. Depending on the chemicals in use more frequent inspection may be required.

[Statutory Authority: RCW 49.17.010, [49.17].040, and [49.17].050. 02-15-102, § 296-835-11025, filed 7/17/02, effective 10/1/02.]

FIRST AID

WAC 296-835-11030 Make sure employees working near dip tanks know appropriate first-aid procedures.

You must:

• Make sure your employees know the appropriate first-aid procedures for the hazards of your dipping and coating operations.

Note:
- First-aid procedures are contained in the Material Safety Data Sheet (MSDS) for the chemicals used in the dip tank.
- First-aid supplies appropriate for the hazards of the dipping or coating operation need to be located near the dip tank to be considered "readily available" as required by WAC 296-800-15020.

Reference: There are additional requirements that may include providing emergency washing facilities and employee training. See first aid, WAC 296-800-150, and employer chemical hazard communication, WAC 296-800-170, in the safety and health core rules, chapter 296-800 WAC.

[Statutory Authority: RCW 49.17.010, [49.17].040, and [49.17].050. 02-15-102, § 296-835-11030, filed 7/17/02, effective 10/1/02.]

CLEANING

WAC 296-835-11035 Prepare dip tanks before cleaning.

You must:

(1) Drain the contents of the tank and open any cleanout doors.

(2) Ventilate the tank to clear any accumulated hazardous vapors.

Reference: There may be requirements that apply before an employee enters a dip tank. See Permit-required confined spaces, WAC 296-62-141 and safety procedures, chapter 296-24 WAC, Part A-4.

[Statutory Authority: RCW 49.17.010, [49.17].040, and [49.17].050. 02-15-102, § 296-835-11035, filed 7/17/02, effective 10/1/02.]

CYANIDE

WAC 296-835-11040 Safeguard cyanide tanks.

You must:

• Provide a dike or other safeguard(s) to prevent cyanide from mixing with an acid if a dip tank fails.

Note: This would also apply to spills or other means by which cyanide could come in contact with an acid in sufficient quantity to produce a hazardous gas.

[Statutory Authority: RCW 49.17.010, [49.17].040, and [49.17].050. 02-15-102, § 296-835-11040, filed 7/17/02, effective 10/1/02.]

WELDING

WAC 296-835-11045 Protect employees during welding, burning, or other work using open flames.

You must:

• Make sure the dip tank and the area around it are thoroughly cleaned of solvents and vapors before performing work involving:

– Welding

– Burning

OR

– Open flames

Reference: There are additional requirements for this type of work. See Welding, cutting and brazing, chapter 296-24 WAC, Part I, and Respiratory protection, chapter 296-62 WAC, Part E.

[Statutory Authority: RCW 49.17.010, [49.17].040, and [49.17].050. 02-15-102, § 296-835-11045, filed 7/17/02, effective 10/1/02.]

LIQUIDS HARMFUL TO SKIN

WAC 296-835-11050 Protect employees that use liquids that may burn, irritate, or otherwise harm the skin.

You must:

(1) Make sure washing facilities, including hot water, are available for every ten employees that work with dip tank liquids.

(2) Satisfy medical requirements:

• Make sure an employee with any small skin abrasion, cut, rash, or open sore receives treatment by a properly designated person.

• Make sure an employee with a sore, burn, or other skin lesion that needs medical treatment, has a physician's approval before they perform their regular work.

• Make sure employees who work with chromic acid receive periodic examinations of their exposed body parts, especially their nostrils.

Note:
- Periodic means on a yearly basis unless otherwise indicated.
- Any time chromic acid spills onto an employee's skin or their clothing is saturated, a physician should be responsible for evaluating and monitoring the area where chromic acid made contact with the skin.

You must:

(3) Provide lockers or other storage space to prevent contamination of street clothes.

Reference: You have to do a hazard assessment to identify hazards or potential hazards in your workplace and determine if PPE is necessary to protect your employees. See Personal protective equipment (PPE), WAC 296-800-160, in the safety and health core rules, chapter 296-800 WAC.

[Statutory Authority: RCW 49.17.010, [49.17].040, and [49.17].050. 02-15-102, § 296-835-11050, filed 7/17/02, effective 10/1/02.]

WAC 296-835-120 Additional requirements for dip tanks using flammable or combustible liquids. Summary.

IMPORTANT:

This section applies to:

• Flammable and combustible liquids (flashpoint below 200°F)

• Liquids that have a flashpoint of 200°F (93.3°C) or higher if you:

– Heat the liquid

– Dip a heated object in the tank

Reference: Store flammable and combustible liquids as required by Flammable and combustible liquids, WAC 296-24-330, in the general safety and health standards.

Your responsibility:

Safeguard employees working with dip tanks containing flammable or combustible liquids

You must:

CONSTRUCTION

Include additional safeguards when constructing dip tanks

WAC 296-835-12005

Provide overflow pipes

WAC 296-835-12010

Provide bottom drains

WAC 296-835-12015

FIRE PROTECTION

Provide fire protection in the vapor area

WAC 296-835-12020

Provide additional fire protection for large dip tanks

WAC 296-835-12025

ELECTRICAL WIRING AND EQUIPMENT AND SOURCES OF IGNITION

Prevent static electricity sparks or arcs when adding liquids to a dip tank

WAC 296-835-12035

Control ignition sources in the vapor area and adjacent area

WAC 296-835-12040

Provide safe wiring and electrical equipment where the liquid can drip or splash

WAC 296-835-12045

HOUSEKEEPING

Keep the area around dip tanks clear of combustible material and properly dispose of waste

WAC 296-835-12050

HEATING LIQUID

Make sure heating the liquid in your dip tanks does not cause a fire

WAC 296-835-12055

HEAT DRYING

Make sure a heating system used for drying objects does not cause a fire

WAC 296-835-12060

CONVEYORS

Make sure the conveyor system for dip tanks is safe

WAC 296-835-12065.

[Statutory Authority: RCW 49.17.010, [49.17].040, and [49.17].050. 02-15-102, § 296-835-120, filed 7/17/02, effective 10/1/02.]

CONSTRUCTION

WAC 296-835-12005 Include additional safeguards when constructing dip tanks.

You must:

(1) Make sure the dip tank, drain boards (if provided), and supports, are made of noncombustible material.

(2) Make sure piping connections on drains and overflow pipes allow easy access to the inside of the pipe for inspection and cleaning.

[Statutory Authority: RCW 49.17.010, [49.17].040, and [49.17].050. 02-15-102, § 296-835-12005, filed 7/17/02, effective 10/1/02.]

WAC 296-835-12010 Provide overflow pipes.

You must:

• Provide an overflow pipe on dip tanks that:

– Hold more than one hundred fifty gallons of liquid

OR

– Have more than ten square feet of liquid surface area

• Make sure the overflow pipe is:

– Properly trapped

– Able to prevent the dip tank from overflowing

– Three inches or more (7.6 cm) in diameter

– Discharged to a safe location.

Note: Discharged to a safe location could be a:
– Safe location outside the building
OR
– Closed, properly vented salvage tank or tanks that can hold more than the dip tank.

You must:

• Make sure the bottom of the overflow pipe is at least six inches (15.2 cm) below the top of the tank.

Note: The overflow pipe should be large enough to remove water applied to the liquid surface of the dip tank from automatic sprinklers or other sources in the event of fire. Smaller dip tanks should be equipped with overflow pipes, if practical.

[Statutory Authority: RCW 49.17.010, [49.17].040, and [49.17].050. 02-15-102, § 296-835-12010, filed 7/17/02, effective 10/1/02.]

WAC 296-835-12015 Provide bottom drains.

Exemption: A bottom drain is not required if:

– The viscosity of the liquid makes it impractical to empty the tank by gravity or pumping

OR

– The dip tank has an automatic closing cover that meets the requirements of WAC 296-835-12030.

You must:

• Provide a bottom drain on all dip tanks that hold more than five hundred gallons of liquid.

• Make sure the bottom drain:

– Is properly trapped

– Will empty the dip tank during a fire

– Has pipes large enough to empty the tank within five minutes

– Uses automatic pumps if gravity draining is not practical

– Is capable of both manual and automatic operation

– Discharges to a safe location.

Note: Discharges to a safe location could be a:
– Safe location outside the building
OR
– Closed, properly vented salvage tank or tanks that can hold more than the dip tank.

You must:

• Make sure manual operation of the bottom drain is performed from a safe and easily accessible location.

[Statutory Authority: RCW 49.17.010, [49.17].040, and [49.17].050. 02-15-102, § 296-835-12015, filed 7/17/02, effective 10/1/02.]

FIRE PROTECTION

WAC 296-835-12020 Provide fire protection in the vapor area.

You must:

• Provide a manual fire extinguisher near the tank that is suitable for putting out flammable and combustible liquid fires.

[Statutory Authority: RCW 49.17.010, [49.17].040, and [49.17].050. 02-15-102, § 296-835-12020, filed 7/17/02, effective 10/1/02.]

WAC 296-835-12025 Provide additional fire protection for large dip tanks.

You must:

• Provide at least one automatic fire extinguishing system or an automatic dip tank cover if the tank:

– Holds one hundred fifty gallons or more of liquid

OR

– Has four square feet or more of liquid surface area.

• Make sure automatic fire extinguishing systems or automatic dip tank covers meet the requirements of Table 1.

Exemption: An automatic fire extinguishing system or an automatic dip tank cover is **not** required for a hardening or tempering tank that:

• Holds less than five hundred gallons

OR

• Has less than twenty-five square feet of liquid surface area.

Table 1: Automatic Fire Protection System Requirements

IF YOU PROVIDE:	THEN YOU MUST:
An automatic fire extinguishing system	• Use extinguishing materials suitable for a fire fueled by the liquid in the tank • Make sure the system protects the: – Tanks – Drain boards – Stock over drain boards.
A dip tank cover	• Make sure the cover is: – Closed by approved automatic devices in the event of fire – Able to be manually activated – Kept closed when the tank is not being used – Made of noncombustible material or metal-clad material with locked metal joints.

Reference: Automatic fire extinguishing systems have specific requirements. See:

– WAC 296-24-622 for automatic dry chemical extinguishing system requirements

– WAC 296-24-623 for automatic carbon dioxide extinguishing system requirements

– WAC 296-24-627 for automatic water spray extinguishing system and automatic foam extinguishing system requirements.

[Statutory Authority: RCW 49.17.010, [49.17].040, and [49.17].050. 02-15-102, § 296-835-12025, filed 7/17/02, effective 10/1/02.]

ELECTRICAL WIRING AND EQUIPMENT AND SOURCES OF IGNITION

WAC 296-835-12035 Prevent static electricity sparks or arcs when adding liquids to a dip tank.

You must:

• Make sure any portable container used to add liquid to the tank is:

– Electrically bonded to the dip tank

– Positively grounded.

[Statutory Authority: RCW 49.17.010, [49.17].040, and [49.17].050. 02-15-102, § 296-835-12035, filed 7/17/02, effective 10/1/02.]

WAC 296-835-12040 Control ignition sources.

You must:

(1) Make sure the vapor areas and adjacent areas do not have any:

• Open flames.

• Spark producing devices.

• Heated surfaces hot enough to ignite vapors.

(2) Use explosion-proof wiring and equipment in the vapor area.

Reference: Electrical wiring and equipment has to meet the requirements of the applicable hazardous (classified) location. See Hazardous (classified) locations, WAC 296-24-95613. Electrostatic equipment has specific electrical requirements. See WAC 296-835-13010.

You must:

(3) Prohibit smoking in any vapor area:

• Post an easily seen "NO SMOKING" sign near each dip tank.

[Statutory Authority: RCW 49.17.010, [49.17].040, and [49.17].050. 02-15-102, § 296-835-12040, filed 7/17/02, effective 10/1/02.]

WAC 296-835-12045 Provide safe electrical wiring and equipment where the liquid can drip or splash.

You must:

• Make sure all electrical wiring and equipment in the vapor area is approved for areas that have:

– Deposits of easily ignited residue

– Explosive vapor

Exemption: This does not apply to wiring that is:

– In rigid conduit, threaded boxes or fittings

– Has no taps, splices, or terminal connections.

[Statutory Authority: RCW 49.17.010, [49.17].040, and [49.17].050. 02-15-102, § 296-835-12045, filed 7/17/02, effective 10/1/02.]

HOUSEKEEPING

WAC 296-835-12050 Keep the area around dip tanks clear of combustible material and properly dispose of waste.

You must:

(1) Make sure the area surrounding dip tanks is:

– Completely free of combustible debris

– As free of combustible stock as possible.

(2) Provide approved metal waste cans that are:

– Used for immediate disposal of rags and other material contaminated with liquids from dipping or coating operations

– Emptied and the contents properly disposed of at the end of each shift.

[Statutory Authority: RCW 49.17.010, [49.17].040, and [49.17].050. 02-15-102, § 296-835-12050, filed 7/17/02, effective 10/1/02.]

HEATING LIQUID

WAC 296-835-12055 Make sure heating the liquid in your dip tanks does not cause a fire.

You must:

• Keep the temperature of the liquid in the dip tank:

– Below the liquid's boiling point

– At least 100°F below the liquid's autoignition temperature.

[Statutory Authority: RCW 49.17.010, [49.17].040, and [49.17].050. 02-15-102, § 296-835-12055, filed 7/17/02, effective 10/1/02.]

HEAT DRYING

WAC 296-835-12060 Make sure a heating system used for drying objects does not cause a fire.

You must:

• Make sure the heating system used in a drying operation that could cause ignition:

– Has adequate mechanical ventilation that operates before and during the drying operation

– Shuts down automatically if a ventilating fan fails to maintain adequate ventilation

– Is installed as required by NFPA 86-1999, Standard for Ovens and Furnaces.

Note: Some, or all, of the consensus standards (such as ANSI and NFPA) may have been revised. If you comply with a later version of a consensus standard, you will be considered to have complied with any previous version of the same consensus standard.

[Statutory Authority: RCW 49.17.010, [49.17].040, and [49.17].050. 02-15-102, § 296-835-12060, filed 7/17/02, effective 10/1/02.]

CONVEYORS

WAC 296-835-12065 Make sure conveyor systems are safe.

You must:

• Make sure the conveyor system shuts down automatically if:

– The ventilation system fails to maintain adequate ventilation

OR

– There is a fire.

[Statutory Authority: RCW 49.17.010, [49.17].040, and [49.17].050. 02-15-102, § 296-835-12065, filed 7/17/02, effective 10/1/02.]

WAC 296-835-130 Additional requirements for dip tanks used for specific processes. Summary.

Your responsibility: Safeguard employees working with dip tanks used for specific processes

You must:

HARDENING OR TEMPERING

Meet specific requirements if you use a hardening or tempering tank

WAC 296-835-13005

ELECTROSTATIC EQUIPMENT

Meet specific requirements if you use electrostatic equipment

WAC 296-835-13010

FLOW COATING

Meet specific requirements if you use flow coating

WAC 296-835-13015

ROLL COATING

Take additional precautions if your roll coating operation uses a liquid that has a flashpoint below 140°F (60°C)

WAC 296-835-13020

VAPOR DEGREASING

Provide additional safeguards for vapor degreasing tanks

WAC 296-835-13025

SPRAY CLEANING OR DEGREASING

Control liquid spray over an open surface cleaning or degreasing tank

WAC 296-835-13030.

[Statutory Authority: RCW 49.17.010, [49.17].040, and [49.17].050. 02-15-102, § 296-835-130, filed 7/17/02, effective 10/1/02.]

HARDENING OR TEMPERING

WAC 296-835-13005 Meet specific requirements if you use a hardening or tempering tank.

You must:

(1) Provide an automatic fire extinguishing system or an automatic dip tank cover for any hardening and tempering tank that uses flammable or combustible liquids and:

– Holds five hundred gallons (1893 L) or more of liquid

OR

– Has twenty-five square feet (2.37 m^2) or more of liquid surface area.

(2) Prevent fires.

• Make sure hardening and tempering tanks are:

– **Not** located on or near combustible flooring.

– Located as far away as practical from furnaces.

– Equipped with noncombustible hoods and vents (or equally effective devices) for venting to the outside.

• Treat vent ducts as flues and keep them away from combustible material, particularly roofs.

(3) Make sure air under pressure is not used to:

• Fill the tank

OR

• Agitate the liquid in the tank.

(4) Equip each tank with an alarm that will sound when the temperature is within 50°F (10°C) of the liquid's flashpoint (alarm set point).

(5) Make sure a limit switch shuts down conveyors supplying work to the tank when the temperature reaches the alarm setpoint, if operationally practical.

(6) Have a circulating cooling system if the temperature of the liquid can exceed the alarm set point.

Note: The bottom drain of the tank may be combined with the oil circulating system if the requirements for bottom drains in WAC 296-835-12015 are satisfied.

[Statutory Authority: RCW 49.17.010, [49.17].040, and [49.17].050. 02-15-102, § 296-835-13005, filed 7/17/02, effective 10/1/02.]

ELECTROSTATIC EQUIPMENT

WAC 296-835-13010 Meet specific requirements if you use electrostatic equipment.

ELECTRICAL

You must:

(1) Provide safe electrical equipment.

• Make sure electrodes in your equipment are:

– Substantial

– Rigidly supported

– Permanently located

– Effectively insulated from ground by insulators

• Make sure the insulators are:

– Nonporous

– Noncombustible

– Kept clean and dry

• Make sure high voltage leads to electrodes are effectively:

– Supported on permanent, suitable insulators

– Guarded against accidental contact or grounding.

(2) Make sure transformers, powerpacks, control apparatus, and all other electrical parts of the equipment:

– Are located outside the vapor area

OR

– Meet the requirements of WAC 296-835-12040.

Exemption: High voltage grids and their connections may be located in the vapor area without meeting the requirements of WAC 296-835-12040.

PAINT DETEARING

You must:

(3) Safeguard paint detearing operations.

• Use approved electrostatic equipment in paint detearing operations.

(4) Make sure goods being paint deteared are:

– Supported on conveyors

– **Not** manually handled.

(5) Keep a minimum safe distance (twice the sparking distance) between goods being paint deteared and the electrodes or conductors of the electrostatic equipment at all times by:

– Arranging the conveyors to provide the necessary distance

– Supporting the goods to prevent swinging or movement, if necessary

• Post a sign that shows the minimum safe distance (twice the sparking distance) near the equipment, where it can be easily seen.

(6) Keep paint detearing operations separate from storage areas and people by using fences, rails or guards that are:

– Made of conducting material

– Adequately grounded.

(7) Protect paint detearing operations from fire by installing:

– Automatic sprinklers

OR

– An approved automatic fire extinguishing system.

(8) Collect and remove paint deposits by:

– Providing removable drip plates and screens

– Cleaning these plates and screens in a safe location.

AUTOMATIC DISCONNECT REQUIREMENT

You must:

(9) Make sure electrostatic equipment has automatic controls that immediately disconnect the power supply to the high-voltage transformer and signal the operator, if:

• Ventilating fans or equipment stop or fail for any reason

• Conveyors do not work properly

• A ground (or imminent ground) occurs anywhere in the high-voltage system

OR

• Goods being paint deteared come within twice the sparking distance of the electrodes or conductors of the equipment.

[Statutory Authority: RCW 49.17.010, [49.17].040, and [49.17].050. 02-15-102, § 296-835-13010, filed 7/17/02, effective 10/1/02.]

FLOW COATING

WAC 296-835-13015 Meet specific requirements if you use a flow coating process.

You must:

(1) Make sure all piping is substantial and rigidly supported.

(2) Make sure the paint is supplied by a:

• Gravity tank that does not hold more than ten gallons (38 L)

OR

• Direct low-pressure pumping system.

(3) Have an approved heat-actuated device that shuts down the pumping system if there is a fire.

Note: The area of the sump, and any areas on which paint flows, should be included in the area of dip tank.

[Statutory Authority: RCW 49.17.010, [49.17].040, and [49.17].050. 02-15-102, § 296-835-13015, filed 7/17/02, effective 10/1/02.]

ROLL COATING

WAC 296-835-13020 Take additional precautions if your roll coating operation uses a liquid that has a flashpoint below 140°F (60°C).

IMPORTANT:

This section applies to the processes of roll coating, roll spreading, or roll impregnating that use a liquid having a flashpoint below 140°F (60°C). Material may be passed directly through a tank or over the surface of a roller that revolves partially submerged in the liquid.

You must:

• Prevent sparks from static electricity by:

– Bonding and grounding all metallic parts (including rotating parts) and installing static collectors

OR

– Maintaining a conductive atmosphere (one with a high relative humidity, for example) in the vapor area.

[Statutory Authority: RCW 49.17.010, [49.17].040, and [49.17].050. 02-15-102, § 296-835-13020, filed 7/17/02, effective 10/1/02.]

VAPOR DEGREASING

WAC 296-835-13025 Provide additional safeguards for vapor degreasing tanks.

You must:

(1) Make sure, if the tank has a condenser or a vapor-level thermostat, that it keeps the vapor level at least:

• Thirty-six inches (91 cm) below the top of the tank if the width of the tank is seventy-two inches or more

OR

• One-half the tank width below the top of the tank if the tank is less than seventy-two inches wide.

(2) Make sure, if you use gas as a fuel to heat the tank liquid, that the combustion chamber is airtight (except for the flue opening) to prevent solvent vapors from entering the air-fuel mixture.

(3) Make sure the exhaust flue:

• Is made of corrosion-resistant material

• Extends to the outside

• Has a draft diverter if mechanical exhaust is used.

(4) Take special precautions to keep solvent vapors from mixing with the combustion air of the heater if chlorinated or fluorinated hydrocarbon solvents (for example, trichloroethylene or freon) are used in the dip tank.

(5) Keep the temperature of the heating element low enough to keep a solvent or mixture from:

• Decomposing

OR

• Generating excessive vapor.

[Statutory Authority: RCW 49.17.010, [49.17].040, and [49.17].050. 02-15-102, § 296-835-13025, filed 7/17/02, effective 10/1/02.]

SPRAY CLEANING OR DEGREASING

WAC 296-835-13030 Control liquid spray over an open surface cleaning or degreasing tank.

You must:

• Control the spray to the greatest extent feasible by:

– Enclosing the spraying operation as completely as possible

– Using mechanical ventilation to provide enough inward air velocity to prevent the spray from leaving the vapor area.

Note: Mechanical baffles may be used to help prevent the discharge of spray.

Reference: Spray painting operations are covered in Spray finishing using flammable and combustible materials, WAC 296-24-370, and Spray-finishing operations, WAC 296-62-11019.

[Statutory Authority: RCW 49.17.010, [49.17].040, and [49.17].050. 02-15-102, § 296-835-13030, filed 7/17/02, effective 10/1/02.]

WAC 296-835-140 Definitions. ACGIH: American Conference of Governmental Industrial Hygienists.

Adjacent area: Any area within twenty feet (6.1 m) of a vapor area that is not separated from the vapor area by tight partitions.

ANSI: American National Standards Institute.

Approved: Approved or listed by a nationally recognized testing laboratory. Refer to federal regulation 29 CFR 1910.7, for definition of nationally recognized testing laboratory.

Autoignition temperature: The minimum temperature required to cause self-sustained combustion without any other source of heat.

Combustible liquid: A liquid having a flashpoint of at least 100°F (37.8°C) and below 200°F (93.3°C). Mixtures with at least ninety-nine percent of their components having flashpoints of 200°F (93.3°C) or higher are not considered combustible liquids.

Detearing: A process for removing excess wet coating material from the bottom edge of a dipped or coated object or material by passing it through an electrostatic field.

Dip tank: A container holding a liquid other than plain water that is used for dipping or coating. An object may be immersed (or partially immersed) in a dip tank or it may be suspended in a vapor coming from the tank.

Flammable liquid: Any liquid having a flashpoint below 100°F (37.8°C), except any mixture having components with flashpoints of 100°F (37.8°C) or higher, the total of which make up ninety-nine percent or more of the total volume of the mixture.

Flashpoint: The minimum temperature at which a liquid gives off a vapor in sufficient concentration to ignite when tested by any of the measurement methods described in the definition of flashpoint in the safety and health core rules, WAC 296-800-370.

Lower flammable limit: The lowest concentration of a material that will propagate a flame. The LFL is usually expressed as a percent by volume of the material in air (or other oxidant).

NFPA: National Fire Protection Association.

Vapor area: Any area in the vicinity of dip tanks, their drain boards or associated drying, conveying, or other equipment where the vapor concentration could exceed twenty-five percent of the lower flammable limit (LFL) for the liquid in the tank.

You: Means the employer. See the definition of employer in the safety and health core rules, WAC 296-800-370.

[Statutory Authority: RCW 49.17.010, [49.17].040, and [49.17].050. 02-15-102, § 296-835-140, filed 7/17/02, effective 10/1/02.]

Chapter 296-839 WAC

CONTENT AND DISTRIBUTION OF MATERIAL SAFETY DATA SHEETS (MSDSs) AND LABEL INFORMATION

WAC

296-839-100	Scope.
296-839-200	Hazard evaluation.
296-839-20005	Conduct complete hazard evaluations.
296-839-20010	Provide access to hazard evaluation procedures.
296-839-300	Material safety data sheets.
296-839-30005	Develop or obtain material safety data sheets (MSDSs).
296-839-30010	Provide MSDSs for products shipped, transferred or sold over-the-counter.
296-839-30015	Follow-up if an MSDS is not provided.
296-839-400	Labeling.
296-839-40005	Label containers of hazardous chemicals.
296-839-500	Definitions.

WAC 296-839-100 Scope. This chapter sets minimum requirements for content and distribution of material safety data sheets (MSDSs) and labels for hazardous chemicals.

• This chapter applies when you do **one or more** of the following:

– Import, produce, or repackage chemicals, including manufactured items (such as bricks, welding rods, and sheet metal) that are not exempt as articles

– Sell or distribute hazardous chemicals to manufacturers, distributors or employers

– Choose to develop material safety data sheets (MSDSs) for a product you do not import or manufacture.

Reference:

See WAC 296-800-170, the Employer chemical hazard communication rule, for MSDSs, label, and other requirements that apply when hazardous chemicals are used in your workplace.

Note: • Use Table 2 to determine which sections in this chapter apply to your workplace.

Exemptions:

• All of the following are **always** exempt from this chapter:

– Ionizing and nonionizing radiation

– Biological hazards

– Tobacco and tobacco products

• The chemicals and items listed in Table 1 are exempt from this chapter **under the conditions specified.**

Table 1
Conditional Exemptions from this Chapter

This chapter does NOT apply to	When
• Alcoholic beverages **OR** • Foods	• Sold, used, or prepared in a retail establishment (such as a grocery store, restaurant, bar, or tavern)
• An article (manufactured item)	• It is not a fluid or particle **AND** • It is formed to a specific shape or design during manufacture for a particular end use function[1] **AND** • It releases only trace amounts of a hazardous chemical during normal use **AND** does not pose a physical or health risk to employees
• Consumer products – Produced or distributed for sale meeting the definition of "consumer products" in the Consumer Product Safety Act (see U.S. Code, Title 15, Chapter 47, section 2052[2]) **OR** • Hazardous household products – Meeting the definition of "hazardous substances" in the Federal Hazardous Substance Act (see U.S. Code, Title 15, Chapter 30, section 1261[2])	• Both criteria apply: – They are used in the workplace for the same purpose as intended by the manufacturer or importer – The duration and frequency of an employee's exposure is no more than the range of exposures that consumers might reasonably experience
• Cosmetics	• Packaged and sold in retail establishments
• Drugs – Meeting the definition for "drugs" in the Federal Food, Drug, and Cosmetic Act (see U.S. Code, Title 21, Chapter 9, Subchapter II, section 321[2])	• In solid, final form (for example, tablets, or pills) for direct administration to the patient **OR** • Packaged and sold in retail establishments (for example, over-the-counter drugs) **OR** • Intended for employee consumption while in the workplace (for example, first-aid supplies)
• Hazardous solid wastes – Meeting the definition of "hazardous wastes" in the Solid Waste Disposal Act, as amended by the Resource Conservation and Recovery Act of 1976 (see U.S. Code, Title 42, Chapter 82, Subchapter I, section 6903[2])	• Subject to the United States Environmental Protection Agency (EPA) regulations[3]
• Hazardous substances – Released into the environment, meeting the definition of "hazardous substances" in the Comprehensive Environmental Response, Compensation and Liability Act (CERCLA) (see U.S. Code, Title 42, Chapter 103, Subchapter I, section 9601[2])	• They are the focus of remedial or removal action being conducted under CERCLA in accordance with EPA regulations (Title 40 of the Code of Federal Regulations (CFR)[3])
• Hazardous wastes – Meeting the definition of "dangerous wastes" in the Hazardous Waste Management Act (see chapter 70.105 RCW[4])	• Subject to department of ecology regulations, chapter 173-303 WAC[5], that address the accumulation, handling and management of hazardous waste, and describe all of the following: – Safety – Labeling – Personnel training – And other related requirements
• Solid wood **OR** • Wood products (for example, lumber, and paper)	• All of the following apply – The material is not treated with hazardous chemicals – The only hazard is potential flammability or combustibility – The product is not expected to be processed (for example, by sanding or sawing)

[1]End use is dependent in whole, or in part, upon maintaining the item's original shape or design. If the item will be significantly altered from its original form, it can no longer be considered a manufactured item

[2]This federal act is included in the United States Code. See http://www.access.gpo.gov/uscode/uscmain.html

[3]EPA regulations are included in the Code of Federal Regulations (CFR). See http://www.epa.gov

[4]This state act is included in the Revised Code of Washington (RCW). The RCW compiles all permanent laws of the state. See http://www.leg.wa.gov/wsladm/default.htm

[5]See http://www.ecy.wa.gov

Use Table 2 to find out which sections of this chapter apply to you. For example, if you import **AND** sell hazardous chemicals **ALL** sections apply. WAC 296-839-500 applies to all employers covered by the scope of this chapter.

TABLE 2
Section Application

If you	Then the sections marked with an "X" apply			
	20005 - 20010	30005	30010 - 30015	40005
• Import or produce chemicals	X	X		
• Sell or distribute hazardous chemicals to – Manufacturers **OR** – Distributors **OR** – Employers (includes retail or wholesale transactions)			X	X
• Choose to develop MSDSs for a product you do not import or manufacture	X	X		

[Statutory Authority: RCW 49.17.010, 49.17.040, 49.17.050, and 49.17.060. 03-01-096, § 296-839-100, filed 12/17/02, effective 6/1/03.]

WAC 296-839-200 Hazard evaluation.

Your responsibility:

To make sure the hazardous chemicals are identified.

You must:

Conduct complete hazard evaluations

WAC 296-839-20005

Provide access to hazard evaluation procedures

WAC 296-839-20010.

[Statutory Authority: RCW 49.17.010, 49.17.040, 49.17.050, and 49.17.060. 03-01-096, § 296-839-200, filed 12/17/02, effective 6/1/03.]

WAC 296-839-20005 Conduct complete hazard evaluations. Important:

• Hazard evaluation is a process where hazards of chemicals are identified by reviewing available research or testing information. You are not required to perform your own laboratory research or testing to meet the requirements of this section

– Information from hazard evaluations is used to complete material safety data sheets (MSDSs) and labels

– MSDSs from your suppliers may be used to complete the hazard evaluation for chemicals you produce

– MSDSs and labels are **NOT** required for chemicals that are determined to be nonhazardous

• Importers and manufacturers are required to develop MSDSs. If you choose to develop MSDSs for a product you do not import or manufacture, then this chapter also applies to you.

You must:

(1) Describe in writing your procedures for conducting hazard evaluations.

(2) Conduct a complete hazard evaluation for **ALL** chemicals you produce or import to determine if they are hazardous chemicals.

• Identify and consider available scientific evidence of health and physical hazards

• Evidence that meets the criteria in Table 3 must be used to establish a hazard

• Chemicals identified in a Table 4 source must be regarded as hazardous

• The scope of health hazards considered must include the categories in Tables 5 and 6

• If the chemical is a mixture, follow the additional criteria in Table 7.

If you find evidence that meets the criteria in Table 3, use it in your hazard evaluation.

Table 3
Criteria for Hazard Evidence

Hazard	Criteria
• Health hazard	• Where available, use human case reports of health effects **AND** • One or more studies that – Are based on human populations, if available, and animal populations[1,2] **AND** – Report statistically significant conclusions of a hazardous effect or health hazard (as defined in this rule) **AND** – Have been conducted following established scientific principles

Table 3
Criteria for Hazard Evidence

Hazard	Criteria
• Physical hazard	• Valid evidence that shows a chemical is any one of the following[3]: – A combustible liquid – A compressed gas – Explosive – Flammable – An organic peroxide – An oxidizer – Pyrophoric – Unstable (reactive) – Water-reactive

[1] If human data is not available, use results of tests done on animals and other available studies to predict health effects on employees (for example, effects resulting from short and long-term exposures to chemicals).

[2] In vitro studies alone do not generally form the basis of a finding of hazard.

[3] These terms are defined in WAC 296-839-500.

Chemicals identified in the sources listed in Table 4 must be assumed to be hazardous (including carcinogens and potential carcinogens).

Table 4
Information Sources Identifying Hazardous Chemicals

• Sources that address a broad range of hazard categories:
– Chapter 296-62 WAC, General Occupational Health Standards, WISHA
– 29 CFR Part 1910, Subpart Z, Toxic and Hazardous Substances, Occupational Safety and Health Administration (OSHA)
– *Threshold Limit Values for Chemical Substances and Physical Agents in the Work Environment*, American Conference of Governmental Industrial Hygienists (ACGIH) (latest edition).
• Sources that identify carcinogens or potential carcinogens:
– Chapter 296-62 WAC, General Occupational Health Standards, WISHA
– 29 CFR Part 1910, Subpart Z, Toxic and Hazardous Substances, Occupational Safety and Health Administration (OSHA)
– National Toxicology Program (NTP), Annual Report on Carcinogens (latest edition)
– International Agency for Research on Cancer (IARC) Monographs (latest editions).

Note: The *Registry of Toxic Effects of Chemical Substances* is published by the National Institute for Occupational Safety and Health (NIOSH) and identifies chemicals found to be potential carcinogens by the NTP and IARC.

Chemicals meeting Table 5 definitions, along with the criteria for established evidence in Table 3, must be regarded as hazardous.

Table 5 is NOT intended to present all hazard categories or test methods. Available scientific data involving other test methods and animal species must also be evaluated to determine a chemical's hazards.

Table 5
Standard Health Hazard Categories

A chemical is considered to be	If
• A carcinogen	• The International Agency for Research on Cancer (IARC) considers it to be a carcinogen or potential carcinogen **OR** • The National Toxicity Program (NTP) (latest edition) lists it as a carcinogen or potential carcinogen **OR** • It is regulated by WISHA or OSHA as a carcinogen

Table 5
Standard Health Hazard Categories

A chemical is considered to be	If
• Corrosive	• It causes visible destruction of, or irreversible alterations in, living tissue (not inanimate surfaces) by chemical action at the site of contact Example: – A chemical is corrosive if tested on the intact skin of albino rabbits by a method described by the U.S. Department of Transportation (in Appendix A to 49 CFR Part 173) and it destroys or changes (irreversibly) the structure of the tissue at the contact site after a four-hour exposure period
• Toxic	• It has a median lethal dose (LD50) greater than 50 milligrams per kilogram, but no more than 500 milligrams per kilogram of body weight, when administered orally to albino rats weighing between 200 - 300 grams each. **OR** • It has a median lethal dose (LD50) greater than 200 milligrams per kilogram, but not more than 1,000 milligrams per kilogram, of body weight when administered by continuous contact for twenty-four hours (or less if death occurs within twenty-four hours) with the bare skin of albino rabbits weighing between 2 - 3 kilograms each **OR** • It has a median lethal concentration (LC50), in air: – Greater than 200 parts per million, but not more than 2,000 parts per million (by volume of gas or vapor) **OR** – Greater than 2 milligrams per liter, but not more than 20 milligrams per liter, of mist, fume, or dust, when administered by continuous inhalation for one hour (or less if death occurs within one hour) to albino rats, weighing between 200 - 300 grams each
• Highly toxic	• It has a median lethal dose (LD50) of 50 milligrams, or less, per kilogram of body weight when administered orally to albino rats weighing between 200 - 300 grams each **OR**

Table 5
Standard Health Hazard Categories

A chemical is considered to be	If
	• It has a median lethal dose (LD50) of 200 milligrams, or less, per kilogram of body weight when administered by continuous contact for twenty-four hours (or less if death occurs within twenty-four hours) with the bare skin of albino rabbits weighing between 2 - 3 kilograms each **OR** • It has a median lethal concentration of (LC50), in air, of: – 200 parts per million (by volume), or less, of gas or vapor **OR** – 2 milligrams per liter, or less, of mist, fume, or dust, when administered by continuous inhalation for one hour (or less if death occurs within one hour) to albino rats weighing between 200 - 300 grams each
• An irritant	• It is **NOT** corrosive, but causes a reversible inflammatory effect on living tissue by chemical action at the contact site Examples: – The chemical is a skin irritant when tested on the intact skin of albino rabbits (by the methods of 16 CFR 1500.41) for four hours exposure, (or by other appropriate techniques) and the exposure results in an empirical score of five or more – A chemical is an eye irritant if so determined under the procedure listed in 16 CFR 1500.42 or other appropriate techniques
• A sensitizer	• It causes a substantial proportion of exposed people or animals to develop an allergic reaction in normal tissue after repeated exposure

Categories provided in Table 6 illustrate the broad range of target organ effects that must be considered when conducting hazard evaluations. Chemicals meeting Table 6 definitions, along with the criteria for established evidence in Table 3, must be regarded as hazardous.

Examples provided in Table 6 are **NOT** intended to be a complete list.

Table 6
Examples of Target Organ Effect Categories Category

Category	Definition	Examples of Signs and Symptoms	Examples of Chemicals
Hepatotoxins	Cause liver damage	• Jaundice • Liver enlargement	• Carbon tetrachloride • Nitrosamines
Nephrotoxins	Cause kidney damage	• Edema • Proteinuria	• Halogenated hydrocarbons • Cadmium
Neurotoxins	Cause primary toxic effects on the nervous system	• Narcosis • Behavioral changes • Decrease in motor functions	• Mercury • Carbon disulfide • Lead
Chemicals that act on the • Blood **OR** • Hematopoietic (blood forming) system	• Decrease hemoglobin function **OR** • Deprive the body tissues of oxygen	• Cyanosis • Loss of consciousness	• Carbon monoxide • Cyanides • Benzene
Chemicals that damage the lungs	• Irritate lungs **OR** • Damage pulmonary tissue	• Cough • Tightness in chest • Shortness of breath	• Silica • Asbestos

Table 6
Examples of Target Organ Effect Categories Category

Category	Definition	Examples of Signs and Symptoms	Examples of Chemicals
Reproductive toxins	Affect reproductive capabilities, including: • Chromosomal damage (mutation) • Effects on fetuses (teratogenesis)	• Birth defects • Sterility	• Lead • 1,2-Dibromo-3-chloropropane (DBCP) • Nitrous Oxide
Cutaneous (skin) hazards	Affect the dermal layer of the body	• Defatting of the skin • Rashes • Irritation	• Ketones • Chlorinated compounds
Eye hazards	Affect the eye or ability to see	• Conjunctivitis • Corneal damage	• Organic solvents • Acids

Table 7
Criteria for Evaluating Chemical Mixtures

If a mixture	Then
• Has been thoroughly tested as a whole for a physical or health hazard	• You must use those results
• Has **NOT** been tested as a whole for a health hazard	• You must: – Evaluate **EACH** ingredient in the mixture to determine the hazards – Consider the mixture to have the same hazard as each ingredient determined to be hazardous
• Has **NOT** been tested as a whole for physical hazards	• You must: • Use any scientifically valid data available to evaluate the potential physical hazards of the mixture

[Statutory Authority: RCW 49.17.010, 49.17.040, 49.17.050, and 49.17.060. 03-01-096, § 296-839-20005, filed 12/17/02, effective 6/1/03.]

WAC 296-839-20010 Provide access to hazard evaluation procedures.

You must:

• Provide access to your written hazard evaluation procedures when requested by any of the following:

– Employees

– Designated representatives of employees

– Representatives of the department of labor and industries

– Representatives of the National Institute for Occupational Safety and Health (NIOSH).

[Statutory Authority: RCW 49.17.010, 49.17.040, 49.17.050, and 49.17.060. 03-01-096, § 296-839-20010, filed 12/17/02, effective 6/1/03.]

WAC 296-839-300 Material safety data sheets.

Your responsibility:

To provide complete and accurate material safety data sheets (MSDSs).

You must:

Develop or obtain MSDSs

WAC 296-839-30005

Provide MSDSs

WAC 296-839-30010

Follow-up if an MSDS is not provided

WAC 296-839-30015.

[Statutory Authority: RCW 49.17.010, 49.17.040, 49.17.050, and 49.17.060. 03-01-096, § 296-839-300, filed 12/17/02, effective 6/1/03.]

WAC 296-839-30005 Develop or obtain material safety data sheets (MSDSs).

You must:

• Develop or obtain a complete and accurate material safety data sheet (MSDS) for each hazardous chemical or mixture according to **ALL** of the following:

– **ALL** information in Table 8 must be completed. If there is no relevant information for a required item, this must be noted. Blank spaces are not permitted.

Note: • No specific format is required for MSDSs; however, an example format (OSHA form 174) can be found online at: http://www.osha.gov

• One MSDS can be developed for a group of complex mixtures (for example, jet fuels or crude oil) **IF** the health and physical hazards of the mixtures are similar (the amounts of chemicals in the mixture may vary).

– Content of MSDSs must accurately represent the available scientific evidence.

Note: You may report results of scientifically valid studies that tend to refute findings of hazards.

– MSDSs must be in English.

Note: You may develop copies of MSDSs in other languages.

You must:

• Revise an MSDS when you become aware of new and significant information regarding the hazards of a chemical, or how to protect against the hazards

– Within three months after you first become aware of the information

OR

– Before the chemical is reintroduced into the workplace if the chemical is no longer being used, produced or imported.

Table 8
Information Required on MSDSs

• The chemical's identity as it appears on the label
• The date the MSDS was prepared or updated
• A contact for additional information about the hazardous chemical and appropriate emergency procedures Include all of the following: – Name – Address – Telephone number of the responsible party preparing or distributing the MSDS
• The chemical's hazardous ingredients[1] as determined by your hazard evaluation – For a **single substance chemical,** include the chemical and common name(s) of the substance – For **mixtures** tested as a whole ■ Include the common name(s) of the mixture **AND** ■ List the chemical and common name(s) of ingredients that contribute to the known hazards – For **mixtures NOT** tested as a whole, list the chemical and common name(s) of hazardous ingredients

Table 8 Information Required on MSDSs
■ That make up 1% or more of the mixture, by weight or volume, including carcinogens (if 0.1% concentration or more, by weight or volume) – If ingredients are less than the above concentrations but may present a health risk to employees (for example, allergic reaction or exposure could exceed the permissible exposure limits, or PEL) they must be listed here
• Exposure limits for airborne concentrations. Include **ALL** of the following, when they exist: – WISHA or OSHA PELs[2] ■ The 8-hour time weighted average (TWA) ■ The short-term exposure limit (STEL), if available ■ Ceiling values, if available – Threshold limit values (TLVs) including 8-hour TWAs, STELs, and ceiling values – Other exposure limits used or recommended by the employer preparing the MSDS
• Physical and chemical characteristics – For example, boiling point, vapor pressure, and odor
• Fire, explosion data, and related information – For example, flashpoint, flammable and explosion limits, extinguishing media, and unusual fire or explosion hazards
• Physical hazards of the chemical including reactivity information – For example, incompatibilities, decomposition products, by-products, and conditions to avoid
• Health hazard information including **ALL** of the following: – Primary routes of exposure ■ For example, inhalation, ingestion, and skin absorption or other contact[3] – Health effects (or hazards) associated with: ■ Short-term exposure[4] **AND** ■ Long-term exposure[4] – Whether the chemical is listed or described as a carcinogen or potential carcinogen in the latest editions of each of the following: ■ The National Toxicology Program (NTP) Annual Report on Carcinogens **OR** ■ The International Agency for Research on Cancer (IARC) Monographs as a potential carcinogen **OR** ■ WISHA or OSHA rules – Signs and symptoms of exposure[5] – Medical conditions generally recognized as being aggravated by exposure
• Emergency and first-aid procedures
• Generally applicable precautions for safe handling and use known to the employer preparing the MSDS – For example, appropriate procedures for clean-up of spills and leaks, waste disposal method, precautions during handling and storing
• Generally applicable and appropriate control measures known to the employer preparing the MSDS, including **ALL** of the following: – Engineering controls (for example, general or local exhaust ventilation) – Work practices – Personal protective equipment (PPE) – Personal hygiene practices – Protective measures during repair and maintenance of contaminated equipment

[1]The identities of some chemicals may be protected as trade secret information (see chapter 296-62 WAC, Part B-1, Trade secrets).

[2] WISHA PEL categories are defined, and values are provided, in chapter 296-62 WAC, Part H.

[3] A "skin notation" listed with either an ACGIH TLV or WISHA/OSHA PEL indicates that skin absorption is a primary route of exposure.

[4]Examples of:
• Short-term health effects (or hazards) include eye irritation, skin damage caused by contact with corrosives, narcosis, sensitization, and lethal dose.
• Long-term health effects (or hazards) include cancer, liver degeneration, and silicosis.

[5]Signs and symptoms of exposure to hazardous substances include those that:
• Can be measured such as decreased pulmonary function
AND
• Are subjective such as feeling short of breath.

[Statutory Authority: RCW 49.17.010, 49.17.040, 49.17.050, and 49.17.060. 03-01-096, § 296-839-30005, filed 12/17/02, effective 6/1/03.]

WAC 296-839-30010 Provide MSDSs for products shipped, transferred or sold over-the-counter.

You must:

• Provide the correct MSDS to manufacturers, distributors and employers:

– With the initial shipment or transfer of the product

AND

– With the first shipment or transfer after an MSDS is updated

AND

– Whenever one is requested.

Note:
• MSDSs may be provided separately from containers as long as they are provided before or at the same time as the containers. For example, you may fax, or e-mail the MSDS.
• You are **NOT** required to provide MSDSs to retailers who inform you they
– Do not sell the product to commercial accounts
AND
– Do not open the sealed product containers for use in their workplace.

You must:

• Follow the requirements in Table 9 for chemicals sold over-the-counter.

Table 9 Requirements for Chemicals Sold Over-the-Counter (NOT Shipped)	
If you are a	**Then**
• Retail distributor **WITH** commercial accounts	• Provide an MSDS to employers with commercial accounts when requested **AND** • Post a sign, or otherwise inform employers, that MSDSs are available
• Retail distributor **WITHOUT** commercial accounts	• Provide the employer, when requested, with **ALL** of the following: – Name – Address – Telephone number of the chemical manufacturer, importer, or distributor who can provide an MSDS
• Wholesale distributor selling products over-the-counter to employers	• Provide an MSDS to employers with commercial accounts when requested **AND** • Post a sign, or otherwise inform employers, that MSDSs are available

[Statutory Authority: RCW 49.17.010, 49.17.040, 49.17.050, and 49.17.060. 03-01-096, § 296-839-30010, filed 12/17/02, effective 6/1/03.]

WAC 296-839-30015 Follow-up if an MSDS is not provided.

You must:

• Obtain an MSDS from the chemical manufacturer, distributor or importer as soon as possible, if an MSDS is not provided for a shipment labeled as a hazardous chemical.

[Statutory Authority: RCW 49.17.010, 49.17.040, 49.17.050, and 49.17.060. 03-01-096, § 296-839-30015, filed 12/17/02, effective 6/1/03.]

WAC 296-839-400 Labeling.

Your responsibility:

To provide employers with containers of hazardous chemicals that are properly labeled.

[Statutory Authority: RCW 49.17.010, 49.17.040, 49.17.050, and 49.17.060. 03-01-096, § 296-839-400, filed 12/17/02, effective 6/1/03.]

WAC 296-839-40005 Label containers of hazardous chemicals.

Exemption:

Containers are exempt from this section if **ALL** hazardous contents are listed in Table 11.

You must:

• Make sure every container of hazardous chemicals leaving the workplace is properly labeled. This includes **ALL** of the following:

– The identity of the hazardous chemical (the chemical or common name) that matches the identity used on the MSDS

– An appropriate hazard warning

– The name and address of the chemical manufacturer, importer, or other responsible party

– Make sure labeling does not conflict with the requirements of:

■ The Hazardous Materials Transportation Act (49 U.S.C. 1801 et seq.)

AND

■ Regulations issued under the act by the U.S. Department of Transportation (Title 49 of the Code of Federal Regulations, Parts 171 through 180). See http://www.dot.gov

– Revise labels within three months of becoming aware of new and significant information about chemical hazards

– Provide revised labels on containers beginning with the first shipment after a revision, to manufacturers, distributors or employers

– Revise the label when a chemical is not currently used, produced or imported, before:

■ You resume shipping (or transferring) the chemical

OR

■ The chemical is reintroduced in the workplace

– Label information

■ Clearly written in English

AND

■ Prominently displayed on the container

Reference:

Additional labeling requirements for specific hazardous chemicals (for example, asbestos, cadmium, and formaldehyde) are found in chapter 296-62 WAC, General occupational health standards (see parts F, G, I and I-1 of that chapter).

Note: When the conditions specified in Table 10 are met for the solid material products listed you are not required to provide labels for every shipment.

Table 10
Labeling for Solid Materials

You need only send labels with the first shipment, IF the product is	And
Whole grain	• It is shipped to the same customer **AND** • No hazardous chemicals are part of or known to be present with the product which could expose employees during handling – For example, cutting fluids on solid metal, and pesticides with grain
Solid untreated wood	
Solid metal For example: Steel beams, metal castings	
Plastic items	

Exemptions:

The chemicals (and items) listed in Table 11 are **EXEMPT** from **THIS SECTION** under the conditions specified. Requirements in other sections still apply.

Table 11
Conditional Label Exemptions

This section does not apply to	When the product is
• Pesticides – Meeting the definition of "pesticides" in the Federal Insecticide, Fungicide, and Rodenticide Act (FIFRA) (see Title 7, U.S.C. Chapter 6, Subchapter II, section 136[1])	• Subject to – Labeling requirements of FIFRA[1] **AND** – Labeling regulations issued under FIFRA by the United States Environmental Protection Agency (EPA) (see Title 40 of the Code of Federal Regulations[2])
• A chemical substance or mixture – Meeting the definition of "chemical substance" or "mixture" in the Toxic Substance Control Act (TSCA) (see Title 15 U.S.C. Chapter 53, Subchapter II, Section 2602[1])	• Subject to – Labeling requirements of TSCA[1] **AND** – Labeling requirements issued under TSCA by the EPA (see Title 40 of the Code of Federal Regulations[2])
• Each of the following: – Food – Food additives – Color additives – Drugs – Cosmetics – Medical devices or products – Veterinary devices or products – Materials intended for use in these products (for example: Flavors, and fragrances) • As defined in – The Federal Food, Drug, and Cosmetic Act (see Title 21 U.S.C. Chapter 9, Subchapter II, Section 321[1]) **OR** – Or the Virus-Serum Toxin Act of 1913 (see Title 21 U.S.C. Chapter 5, Section 151 et seq.[1]) **OR** – Regulations issued under these acts (see Title 21 Part 101 in the Code of Federal Regulations, and Title 9, in the Code of Federal Regulations[3])	• Subject to: – Labeling requirements in Federal Food, Drug, and Cosmetic Act, Virus-Serum Toxin Act of 1913, and issued regulations enforced by the United States ■ Food and Drug Administration (see Title 21 Parts 101-180 in the Code of Federal Regulations[3]) **OR** ■ Department of Agriculture (see Title 9, in the Code of Federal Regulations[3])

Table 11
Conditional Label Exemptions

This section does not apply to	When the product is
• Each of the following: – Distilled spirits (beverage alcohols) **AND** – Wine **AND** – Malt beverage • As defined in – The Federal Alcohol Administration Act (see Title 27 U.S.C. Section 201[1]) **AND** – Regulations issued under this act (see Title 27 in the Code of Federal Regulations)[3]	• Subject to: – Labeling requirements of Federal Alcohol Administration Act[1] **AND** – Labeling regulations issued under Federal Alcohol Administration Act by the Bureau of Alcohol, Tobacco, and Firearms (see Title 27 in the Code of Federal Regulations[3])
• Consumer products **AND** • Hazardous substances – As defined in ■ The Consumer Product Safety Act (see 15 U.S.C. 2051 et seq.[1]) **AND** ■ The Federal Hazardous Substances Act (see 15 U.S.C. 1261 et seq.[1])	• Subject to: – A consumer product safety or labeling requirement of the Consumer Product Safety Act or Federal Hazardous Substances Act[1] **OR** – Regulations issued under these acts by the Consumer Product Safety Commission (see Title 16 in the Code of Federal Regulations[3])
• Agricultural seed **AND** • Vegetable seed treated with pesticides	• Labeled as required by – The Federal Seed Act (see Title 7 U.S.C. Chapter 37 Section 1551 et seq.[1]) **AND** – Labeling requirements issued under Federal Seed Act by the United States Department of Agriculture[1]

[1]This federal act is included in the United States Code. See http://www.access.gpo.gov/uscode/uscmain.html
[2]See http://www.epa.gov
[3]See http://www.access.gpo.gov/nara/cfr/index.html

[Statutory Authority: RCW 49.17.010, 49.17.040, 49.17.050, and 49.17.060. 03-01-096, § 296-839-40005, filed 12/17/02, effective 6/1/03.]

WAC 296-839-500 Definitions. The following definitions apply to this chapter:

Article (manufactured item)

A manufactured item that

• Is not a fluid or particle

AND

• Is formed to a specific shape or design during manufacture for a particular end use function

AND

• Releases only trace amounts of a hazardous chemical during normal use and does not pose a physical or health risk to employees.

Chemical

• An element or mixture of elements

OR

• A compound or mixture of compounds

OR

• A mixture of elements and compounds

Included are manufactured items (such as bricks, welding rods and sheet metal) that are not exempt as an article.

Chemical name

• The scientific designation of a chemical developed by the

– International union of pure and applied chemistry (IUPAC)

OR

– Chemical abstracts service (CAS) rules of nomenclature

OR

• A name that clearly identifies the chemical for the purpose of conducting a hazard evaluation.

Combustible liquid

Liquids with a flashpoint of at least 100°F (37.8°C) and below 200°F (93.3°C). A mixture with at least 99% of its components having flashpoints of 200°F (93.3°C), or higher, is not considered a combustible liquid.

Commercial account

An arrangement where a retailer is selling hazardous chemicals to an employer

• Generally in large quantities over time

OR

• At costs below regular retail price.

Common name

Any designation or identification used to identify a chemical other than the chemical name, such as a

• Code name or number

OR

• Trade or brand name

OR

• Generic name.

Compressed gas

• A contained gas or mixture of gases with an absolute pressure greater than:

– 40 psi at 70°F (21.1°C)

OR

– 104 psi at 130°F (54.4°C) regardless of the pressure at 70°F (21.1°C)

OR

• A liquid with a vapor pressure greater than 40 psi at 100°F (37.8°C), as determined by ASTM D323-72.

Container

A vessel, other than a pipe or piping system, that holds a hazardous chemical. Examples include:

• Bags
• Barrels
• Bottles
• Boxes
• Cans
• Cylinders
• Drums
• Reaction vessels
• Storage tanks
• Rail cars.

Designated representative

• An individual or organization with written authorization from an employee

OR

• A recognized or certified collective bargaining agent (not necessarily authorized by an employee)

OR

• A legal representative of a deceased or legally incapacitated employee.

Distributor

A business that supplies hazardous chemicals to other employers. Included are employers who conduct retail and wholesale transactions.

Explosive

A chemical that causes a sudden, almost instant release of pressure, gas, and heat when exposed to a sudden shock, pressure, or high temperature.

Flammable

A chemical in one of the following categories:

• Aerosols that, when tested using a method described in 16 CFR 1500.45, yield either a:

– Flame projection of more than eighteen inches at full valve opening

OR

– A flashback (a flame extending back to the valve) at any degree of valve opening

• Gases that, at the temperature and pressure of the surrounding area, form a:

– Flammable mixture with air at a concentration of thirteen percent, by volume, or less

OR

– Range of flammable mixtures with air wider than twelve percent, by volume, regardless of the lower limit

• Liquids with a flashpoint below 100°F (37.8°C). A mixture with at least ninety-nine percent of its components having flashpoints of 100°F (37.8°C), or higher, is not considered a flammable liquid

• Solids, other than blasting agents or explosives, as defined in WAC 296-52-417 or 29 CFR 1910.109(a), that:

– Is likely to cause fire through friction, moisture, absorption, spontaneous chemical change or retained heat from manufacturing or processing

OR

– That can be readily ignited (and when ignited burns so vigorously and persistently that it creates a serious hazard)

OR

– When tested by the method described in 16 CFR 1500.44, ignite and burn with a self-sustained flame at a rate greater than 1/10th of an inch per second along its major axis.

Flashpoint

The minimum temperature at which a liquid gives off an ignitable concentration of vapor, when tested by any of the following measurement methods:

• Tagliabue closed tester. Use this for liquids with a viscosity less than, 45 Saybolt Universal Seconds (SUS) at 100°F (37.8°C), that do not contain suspended solids and do not tend to form a surface film under test. See American National Standard Method of Test for Flashpoint by Tag Closed Tester, Z11.24-1979 (ASTM D 56-79)

• Pensky-Martens closed tester. Use this for liquids with a viscosity equal to, or greater than, 45 SUS at 100°F (37.8°C) or for liquids that contain suspended solids or have a tendency to form a surface film under test. See American National Standard Method of Test for Flashpoint by Pensky-Martens Closed Tester, Z11.7-1979 (ASTM D 93-79)

• Setaflash closed tester. See American National Standard Method of Test for Flashpoint by Setaflash Closed Tester (ASTM D 3278-78)

Organic peroxides, which undergo auto accelerating thermal decomposition, are excluded from any of the flashpoint measurement methods specified above.

Hazardous chemical

A chemical, which is a physical or health hazard.

Hazard warning

Words, pictures or symbols (alone or in combination) that appear on labels (or other forms of warning such as placards or tags) that communicate specific physical and health hazards (including target organ effects) associated with chemicals in a container.

Health hazard

A chemical that may cause health effects in short or long-term exposed employees based on statistically significant evidence from a single study conducted by using established scientific principles.

Health hazards include, but are not limited to, any of the following:

• Carcinogens
• Toxic or highly toxic substances
• Reproductive toxins
• Irritants
• Corrosives
• Sensitizers
• Hepatotoxins (liver toxins)
• Nephrotoxins (kidney toxins)
• Neurotoxins (nervous system toxins)
• Substances that act on the hematopoietic system (blood or blood forming system)
• Substances that can damage the lungs, skin, eyes, or mucous membranes.

Identity

A chemical or common name listed on the material safety data sheet (MSDS) and label.

Importer

The first business, within the Customs Territory of the United States, that receives hazardous chemicals produced in other countries and supplies them to manufacturers, distributors or employers within the United States.

Label

Written, printed, or graphic material displayed on, or attached to, a container of hazardous chemicals.

Manufacturer

An employer with a workplace where one or more chemicals (including items not exempt as "articles," see Table 1 in this chapter) are produced for use or distribution.

Material safety data sheet (MSDS)

Written, printed or electronic information (on paper, microfiche, or on-screen) that informs manufacturers, distributors or employers about the chemical, its hazards and protective measures as required by this rule.

Mixture

A combination of two or more chemicals that retain their chemical identify after being combined.

Organic peroxide

An organic compound containing the bivalent-O-O-structure. It may be considered a structural derivative of

hydrogen peroxide if one or both of the hydrogen atoms has been replaced by an organic radical.

Oxidizer

A chemical, other than a blasting agent or explosive as defined in WAC 296-52-417 or 29 CFR 1910.109(a), that starts or promotes combustion in other materials, causing fire either of itself or through the release of oxygen or other gases.

Permissible exposure limits

See chapter 296-62 WAC part H, for definition of this term.

Physical hazards

A chemical that has scientifically valid evidence to show it is one of the following:

- A combustible liquid
- A compressed gas
- Explosive
- Flammable
- An organic peroxide
- An oxidizer
- Pyrophoric
- Unstable (reactive)
- Water-reactive.

Produce

To do one or more of the following:

- Manufacture
- Process
- Formulate
- Blend
- Extract
- Generate
- Emit
- Repackage.

Pyrophoric

Chemicals that ignite spontaneously in the air at a temperature of 130°F (54.4°C) or below.

Responsible party

Someone who can provide more information about the hazardous chemical and appropriate emergency procedures.

Retailer

See "distributor."

Threshold limit values (TLVs)

Airborne concentrations of substances established by the American Conference of Governmental Industrial Hygienists (ACGIH), and represent conditions under which it is believed that nearly all workers may be repeatedly exposed day after day without adverse health effects.

TLVs are specified in the most recent edition of the *Threshold Limit Values for Chemical Substances and Physical Agents and Biological Exposure Indices* and include the following categories:

- Threshold limit value-time-weighted average (TLV-TWA)
- Threshold limit value-short-term exposure limit (TLV-STEL)
- Threshold limit value-ceiling (TLV-C).

Unstable (reactive)

A chemical in its pure state, or as produced or transported, that will vigorously polymerize, decompose, condense, or become self-reactive under conditions of shocks, pressure or temperature.

Use

To do one or more of the following:

- Package
- Handle
- React
- Emit
- Extract
- Generate as a by-product
- Transfer.

Water-reactive

A chemical that reacts with water to release a gas that is either flammable or presents a heath hazard.

Wholesaler

See "distributor."

[Statutory Authority: RCW 49.17.010, 49.17.040, 49.17.050, and 49.17.060. 03-01-096, § 296-839-500, filed 12/17/02, effective 6/1/03.]

Chapter 296-841 WAC
RESPIRATORY HAZARDS

WAC

296-841-100	Scope.
296-841-200	Evaluate and control employee exposures.
296-841-20005	Identify and evaluate respiratory hazards.
296-841-20010	Control employee exposures.
296-841-20015	Use respirators.
296-841-20020	Notify employees.
296-841-20025	Permissible exposure limits of air contaminants.
296-841-300	Definitions.

WAC 296-841-100 Scope. This chapter applies **only** if your employees:

- Are exposed to a respiratory hazard

OR

- Could be exposed to one of the specific hazards listed below.

This chapter applies to any workplace with potential or actual employee exposure to respiratory hazards. It requires you to protect employees from respiratory hazards by applying this protection strategy:

- Evaluate employee exposures to determine if controls are needed
- Use feasible controls. For example, enclose or confine the operation, use ventilation systems, or substitute with less toxic material
- Use respirators if controls are not feasible or if they cannot completely remove the hazard.

Definition:

Exposed or exposure:

The contact an employee has with a toxic substance, harmful physical agent or oxygen deficient condition, whether or not protection is provided by respirators or other personal protective equipment (PPE). Exposure can occur through various routes of entry, such as inhalation, ingestion, skin contact, or skin absorption.

Note:
- Examples of substances that may be respiratory hazards when airborne include:
  - Chemicals listed in Table 3
  - Any substance
- Listed in the latest edition of the NIOSH Registry of Toxic Effects of Chemical Substances
- For which positive evidence of an acute or chronic health hazard exists through tests conducted by, or known to, the employer
- That may pose a hazard to human health as stated on a material safety data sheet kept by, or known to, the employer

– Atmospheres considered oxygen deficient
– Biological agents such as harmful bacteria, viruses or fungi
– Examples include airborne TB aerosols and anthrax
• Pesticides with a label requirement for respirator use
• Chemicals used as crowd control agents such as pepper spray
• Chemicals present at clandestine drug labs.
• These substances can be airborne as dusts, fibers, fogs, fumes, mists, gases, smoke, sprays, vapors, or aerosols.

Reference:
• Substances in Table 3 that are marked with an X in the "skin" column may require personal protective equipment (PPE). See WAC 296-800-160, Personal protective equipment, for additional information and requirements.
• If any of the following hazards are present in your workplace, you will need both this chapter and any of the following specific rules that apply:

Hazard	Rule that applies
Acrylonitrile	WAC 296-62-07336
Arsenic (inorganic)	WAC 296-62-07347
Asbestos	WAC 296-62-077
Benzene	WAC 296-62-07523
Butadiene	WAC 296-62-07460
Cadmium	WAC 296-62-074 through 296-62-07449 or 296-155-174
Carcinogens	Chapter 296-62 WAC, Part F
Coke ovens	Chapter 296-62 WAC, Part O
Cotton dust	Chapter 296-62 WAC, Part N
1, 2-Dibromo-3-chloropropane	WAC 296-62-07342
Ethylene oxide	WAC 296-62-07355
Formaldehyde	WAC 296-62-07540
Lead	WAC 296-62-07521 or 296-155-176
Methylene chloride	WAC 296-62-07470
Methylenedianiline	WAC 296-62-076 or 296-155-173
Thiram	WAC 296-62-07519
Vinyl chloride	WAC 296-62-07329

[Statutory Authority: RCW 49.17.010, 49.17.040, 49.17.050, 49.17.060. 04-18-079, § 296-841-100, filed 8/31/04, effective 11/1/04; 03-20-115, § 296-841-100, filed 10/1/03, effective 1/1/04.]

WAC 296-841-200 Evaluate and control employee exposures.

Summary

Your responsibility:

To protect your employees from exposure to respiratory hazards in the workplace by identifying and controlling the hazards.

You must:

Identify and evaluate employee exposures
WAC 296-841-20005
Control employee exposures
WAC 296-841-20010
Use respirators
WAC 296-841-20015
Notify employees
WAC 296-841-20020.

[Statutory Authority: RCW 49.17.010, 49.17.040, 49.17.050, and 49.17.060. 03-20-115, § 296-841-200, filed 10/1/03, effective 1/1/04.]

WAC 296-841-20005 Identify and evaluate respiratory hazards.

You must:

• Make sure employees are protected from potentially hazardous exposure while you perform your evaluation

• Perform your evaluation without considering the protection provided to employees by a respirator

• Determine the form of the hazard, such as dust, mist, gas, oxygen deficiency, or biological agent.

• Make sure you consider:

– Potential emergency and rescue situations that may occur, such as equipment or power failures, uncontrolled chemical reactions, fire, explosion, or human error

– Workplace conditions such as work processes, types of material, control methods, work practices and environmental conditions.

• Determine or reasonably estimate whether any employee is or could be exposed to any of the following:

– Any airborne substance above a permissible exposure limit (PEL) listed in Table 3

– A substance at or above the action level (AL) specified in the rule for that substance

– Any other respiratory hazard.

• Use **any** of the following to determine employee exposure:

– Information that would allow an estimate of the level of employee exposure, such as MSDSs or pesticide labels, observations, measurements or calculations

– Data demonstrating that a particular product, material or activity cannot result in employee exposure at or above the AL or PEL

– Personal air samples that represent an employee's usual or worst case exposure for the entire shift.

Note:
• Rules for specific substances may contain additional requirements for determining employee exposure.
• Use methods of sampling and analysis that have been validated by the laboratory performing the analysis.
• Samples from a representative group of employees may be used for other employees performing the same work activities when the duration and level of exposure are similar.

You must:

• Consider the atmosphere to be immediately dangerous to life or health (IDLH) when you cannot determine or reasonably estimate employee exposure

• Make sure employee exposure, to two or more substances with additive health effects, is evaluated using this formula:

$$E_m = \frac{C_1}{L_1} + \frac{C_2}{L_2} + \ldots + \frac{C_n}{L_n}$$

The symbol	Is the . . .
E	Equivalent exposure for the mixture. **When the value of E is greater than 1, a respiratory hazard is present.**
C	Concentration of a substance.
L	TWA, STEL, or ceiling for that substance, from Table 3.

[Statutory Authority: RCW 49.17.010, 49.17.040, 49.17.050, 49.17.060. 04-18-079, § 296-841-20005, filed 8/31/04, effective 11/1/04; 03-20-115, § 296-841-20005, filed 10/1/03, effective 1/1/04.]

WAC 296-841-20010 Control employee exposures.

You must:

• Use feasible controls to protect employees from exposure to respiratory hazards by:

– Reducing employee exposure to a level that removes the respiratory hazard, such as to a level below the permissible exposure limits (PEL) in Table 3;

OR

– Reducing the exposure to the lowest achievable level, when the respiratory hazard cannot be removed.

IMPORTANT:

Using respirators and other PPE is not a substitute for the feasible controls required by this section.

Note: The following table gives you examples of control methods.

Table 1
Examples of Possible Controls

Control:	For example:
Using a different chemical (substitution)	• Choose a chemical with a lower evaporation rate or vapor pressure • Choose a chemical without hazardous ingredients
Changing a process to lessen emissions	• Use hand rolling or paint dipping instead of paint spraying • Bolt items instead of welding them
Separating employees from emissions areas and sources	• Use control rooms • Build an enclosure around process machinery or other emissions sources • Automate a process
Removing emissions at or near the source (local exhaust ventilation)	• Install exhaust hoods or slots to capture emissions • Use an exhausted enclosure (like a blasting cabinet or laboratory hood)
Diluting and removing emissions in the work area (general exhaust ventilation)	• Allow natural air movement to create an adequate airflow through an area • Use mechanical fans
Modify work practices	• Change the position of the worker relative to the work so fumes, vapors, or smoke do not go into their face
Rotate employees – Some specific rules prohibit the use of this control method	• Move employees to another job that is without exposure, on a schedule to keep their total exposure below the permissible exposure limit

[Statutory Authority: RCW 49.17.010, 49.17.040, 49.17.050, 49.17.060. 04-18-079, § 296-841-20010, filed 8/31/04, effective 11/1/04; 03-20-115, § 296-841-20010, filed 10/1/03, effective 1/1/04.]

WAC 296-841-20015 Use respirators.

You must:

• Require employees to use respiratory protection when respiratory hazards have not been removed using feasible controls. For example, use respirators at any of the following times:

– While controls are being evaluated or put in place

– When the respiratory hazard is not completely removed

– When controls are **NOT** feasible.

Reference:

See chapter 296-842 WAC, Respirators, for respirator program requirements.

[Statutory Authority: RCW 49.17.010, 49.17.040, 49.17.050, and 49.17.060. 03-20-115, § 296-841-20015, filed 10/1/03, effective 1/1/04.]

WAC 296-841-20020 Notify employees.

You must:

• Notify employees who are or may be exposed to respiratory hazards, as specified in Table 2.

Note: • The notification may be provided either individually, to a group, or by posting of results in an appropriate location that is accessible to affected employees.

Table 2
Notification Requirements

Notify employees of:	As follows:
Any exposure result above a permissible exposure limit (PEL)	Within five business days, after the employee's exposure result is known to the employer
The corrective action being taken to reduce employee exposure to or below the PEL **AND** The schedule for completion of the corrective action and any reasons why exposures cannot be lowered to below the PEL	Within fifteen business days, after the employee's exposure result is known to the employer
An exposure to these substances: • Acrylonitrile • Arsenic (inorganic) • Asbestos • Benzene • Butadiene • Cadmium • Coke oven emissions • Cotton dust • 1,2-Dibromo-3-chloropropane • Ethylene oxide • Formaldehyde • Lead • Methylene chloride • Methylenedianiline • Vinyl chloride	In writing, as specified in the rule specific to the substance

[Statutory Authority: RCW 49.17.010, 49.17.040, 49.17.050, 49.17.060. 04-18-079, § 296-841-20020, filed 8/31/04, effective 11/1/04; 03-20-115, § 296-841-20020, filed 10/1/03, effective 1/1/04.]

WAC 296-841-20025 Permissible exposure limits of air contaminants.

IMPORTANT:

The following information applies to Table 3, Permissible Exposure Limits for Air Contaminants.

• Exposure needs to be determined from personal air samples taken in the breathing zone OR from monitoring representative of the employee's breathing zone.

• Ppm refers to parts of vapor or gas per million parts of air by volume, at 25 degrees C and 760 mm Hg pressure.

• Mg/m^3 refers to milligrams of substance per cubic meter of air.

• For a metal that is measured as the metal itself, only the CAS number for the metal is given. The CAS numbers for individual compounds of the metal are not provided. For more information about CAS registry numbers see the website: http://www.cas.org.

• Time weighted averages (TWA_8) represent the maximum allowed average exposure for any 8-hour time period. For work periods longer than 8-hours the TWA_8 needs to be determined using the 8 continuous hours with the highest average concentration.

• Short-term exposure limits (STEL) represent maximum allowed average exposure for any fifteen-minute period, unless another time period is noted in Table 3.

• The ceiling represents the maximum allowed exposure for the shortest time period that can feasibly be measured.

• An "X" in the "skin" column indicates the substance can be absorbed through the skin, either by airborne or direct contact.

• Requirements for the use of gloves, coveralls, goggles, and other personal protective equipment can be found in WAC 296-800-160.

• The respirable fraction of particulate is measured by sampling with a size-selector having the following characteristics:

Mean aerodynamic diameter in micrometers	Percent passing the selector
1	97
2	91
3	74
4	50
5	30
6	17
7	9
8	5
10	1

Table 3 "Permissible Exposure Limits for Air Contaminants"

Substance	CAS	TWA_8	STEL	Ceiling	Skin
Abate (Temephos)	3383-96-8	——	——	——	——
Total particulate	——	10 mg/m^3	20 mg/m^3	——	——
Respirable fraction	——	5 mg/m^3	10 mg/m^3	——	——
Acetaldehyde	75-07-0	100 ppm	150 ppm	——	——
Acetic acid	64-19-7	10 ppm	20 ppm	——	——
Acetic anhydride	108-24-7	——	——	5 ppm	——
Acetone	67-64-1	750 ppm	1,000 ppm	——	——
Acetonitrile	75-05-8	40 ppm	60 ppm	——	——
2-Acetylaminofluorene (see WAC 296-62-073)	53-96-3	——	——	——	——
Acetylene	74-86-2	Simple asphyxiant	——	——	——
Acetylene dichloride (1,2-Dichloroethylene)	540-59-0	200 ppm	250 ppm	——	——
Acetylene tetrabromide	79-27-6	1 ppm	3 ppm	——	——
Acetylsalicylic acid (Aspirin)	50-78-2	5 mg/m^3	10 mg/m^3	——	——
Acrolein	107-02-8	0.1 ppm	0.3 ppm	——	——
Acrylamide	79-06-1	0.03 mg/m^3	0.09 mg/m^3	——	X
Acrylic acid	79-10-7	10 ppm	20 ppm	——	X
Acrylonitrile (Vinyl cyanide) (see WAC 296-62-07336)	107-13-1	2 ppm	10 ppm	——	——
Aldrin	309-00-2	0.25 mg/m^3	0.75 mg/m^3	——	X
Allyl alcohol	107-18-6	2 ppm	4 ppm	——	X
Allyl chloride	107-05-1	1 ppm	2 ppm	——	——
Allyl glycidyl ether (AGE)	106-92-3	5 ppm	10 ppm	——	——
Allyl propyl disulfide	2179-59-1	2 ppm	3 ppm	——	——
alpha-Alumina (Aluminum oxide)	1344-28-1	——	——	——	——
Total particulate	——	10 mg/m^3	20 mg/m^3	——	——
Respirable fraction	——	5 mg/m^3	10 mg/m^3	——	——
Aluminum (as Al)	7429-90-5	——	——	——	——
Total particulate	——	10 mg/m^3	20 mg/m^3	——	——
Respirable fraction	——	5 mg/m^3	10 mg/m^3	——	——
Pyro powders	——	5 mg/m^3	10 mg/m^3	——	——
Welding fumes	——	5 mg/m^3	10 mg/m^3	——	——
Soluble salts	——	2 mg/m^3	4 mg/m^3	——	——
Alkyls (NOC)	——	2 mg/m^3	4 mg/m^3	——	——
Aluminum oxide (Alundum, Corundum)	7429-90-5	——	——	——	——
Total particulate	——	10 mg/m^3	20 mg/m^3	——	——
Respirable fraction	——	5 mg/m^3	10 mg/m^3	——	——

Table 3 "Permissible Exposure Limits for Air Contaminants"

Substance	CAS	TWA_8	STEL	Ceiling	Skin
4-Aminodiphenyl (see WAC 296-62-073)	92-67-1	——	——	——	——
2-Aminoethanol (Ethanolamine)	141-43-5	3 ppm	6 ppm	——	——
2-Aminopyridine	504-29-0	0.5 ppm	1.5 ppm	——	——
Amitrole	61-82-5	0.2 mg/m^3	0.6 mg/m^3	——	——
Ammonia	7664-41-7	25 ppm	35 ppm	——	——
Ammonium chloride, fume	12125-02-9	10 mg/m^3	20 mg/m^3	——	——
Ammonium sulfamate (Ammate)	7773-06-0	——	——	——	——
Total particulate	——	10 mg/m^3	20 mg/m^3	——	——
Respirable fraction	——	5.0 mg/m^3	10 mg/m^3	——	——
n-Amyl acetate	628-63-7	100 ppm	150 ppm	——	——
sec-Amyl acetate	626-38-0	125 ppm	156 ppm	——	——
Aniline and homologues	62-53-3	2 ppm	4 ppm	——	X
Anisidine (o, p-isomers)	29191-52-4	0.1 ppm	0.3 ppm	——	X
Antimony and compounds (as Sb)	7440-36-0	0.5 mg/m^3	1.5 mg/m^3	——	——
ANTU (alpha Naphthyl thiourea)	86-88-4	0.3 mg/m^3	0.9 mg/m^3	——	——
Argon	7440-37-1	Simple asphyxiant	——	——	——
Arsenic, organic compounds (as As)	7440-38-2	0.2 mg/m^3	0.6 mg/m^3	——	——
Arsenic, inorganic compounds (as As) (when use is covered by WAC 296-62-07347)	7440-38-2	0.01 mg/m^3	——	——	——
Arsenic, inorganic compounds (as As) (when use is not covered by WAC 296-62-07347)	7440-38-2	0.2 mg/m^3	0.6 mg/m^3	——	——
Arsine	7784-42-1	0.05 ppm	0.15 ppm	——	——
Asbestos (see WAC 296-62-077)	——	——	——	——	——
Asphalt (Petroleum fumes)	8052-42-4	5 mg/m^3	10 mg/m^3	——	——
Atrazine	1912-24-9	5 mg/m^3	10 mg/m^3	——	——
Azinphos methyl (Guthion)	86-50-0	0.2 mg/m^3	0.6 mg/m^3	——	X
Azodrin (Monocrotophos)	6923-22-4	0.25 mg/m^3	0.75 mg/m^3	——	——
Barium, soluble compounds (as Ba)	7440-39-3	0.5 mg/m^3	1.5 mg/m^3	——	——
Barium sulfate	7727-43-7	——	——	——	——
Total particulate	——	10 mg/m^3	20 mg/m^3	——	——
Respirable fraction	——	5 mg/m^3	10 mg/m^3	——	——
Baygon (Propoxur)	114-26-1	0.5 mg/m^3	1.5 mg/m^3	——	——
Benomyl	17804-35-2	——	——	——	——
Total particulate	——	10 mg/m^3	20 mg/m^3	——	——
Respirable fraction	——	5 mg/m^3	10 mg/m^3	——	——
Benzene (see WAC 296-62-07523)	71-43-2	1 ppm	5 ppm	——	——
Benzidine (see WAC 296-62-073)	92-87-5	——	——	——	——
p-Benzoquinone (Quinone)	106-51-4	0.1 ppm	0.3 ppm	——	——
Benzo(a) pyrene (Coal tar pitch volatiles)	65996-93-2	0.2 mg/m^3	0.6 mg/m^3	——	——
Benzoyl peroxide	94-36-0	5 mg/m^3	10 mg/m^3	——	——
Benzyl chloride	100-44-7	1ppm	3 ppm	——	——
Beryllium and beryllium compounds (as Be)	7440-41-7	0.002 mg/m^3	0.005 mg/m^3 (30 min.)	0.025 mg/m^3	——
Biphenyl (Diphenyl)	92-52-4	0.2 ppm	0.6 ppm	——	——
Bismuth telluride, undoped	1304-82-1	——	——	——	——
Total particulate	——	10 mg/m^3	20 mg/m^3	——	——
Respirable fraction	——	5 mg/m^3	10 mg/m^3	——	——
Bismuth telluride, Se-doped	——	5 mg/m^3	10 mg/m^3	——	——
Borates, tetra, sodium salts	——	——	——	——	——
Anhydrous	1330-43-4	1 mg/m^3	3 mg/m^3	——	——
Decahydrate	1303-96-4	5 mg/m^3	10 mg/m^3	——	——
Pentahydrate	12179-04-3	1 mg/m^3	3 mg/m^3	——	——
Boron oxide	1303-86-2	——	——	——	——
Total particulate	——	10 mg/m^3	20 mg/m^3	——	——
Boron tribromide	10294-33-4	——	——	1 ppm	——
Boron trifluoride	6737-07-2	——	——	1 ppm	——
Bromacil	314-40-9	1 ppm	3 ppm	——	——
Bromine	7726-95-6	0.1 ppm	0.3 ppm	——	——
Bromine pentafluoride	7789-30-2	0.1 ppm	0.3 ppm	——	——

Table 3 "Permissible Exposure Limits for Air Contaminants"

Substance	CAS	TWA_8	STEL	Ceiling	Skin
Bromochloromethane (Chlorobromomthane)	74-97-5	200 ppm	250 ppm	——	——
Bromoform	15-25-2	0.5 ppm	1.5 ppm	——	X
Butadiene (1,3-butadiene)	106-99-0	1 ppm	5 ppm	——	——
Butane	106-97-8	800 ppm	1,000 ppm	——	——
Butanethiol (Butyl mercaptan)	109-79-5	0.5 ppm	1.5 ppm	——	——
2-Butanone (Methyl ethyl ketone)	78-93-3	200 ppm	300 ppm	——	——
2-Butoxy ethanol (Butyl cellosolve)	111-76-2	25 ppm	38 ppm	——	X
n-Butyl acetate	123-86-4	150 ppm	200 ppm	——	——
sec-Butyl acetate	105-46-4	200 ppm	250 ppm	——	——
tert-Butyl acetate	540-88-5	200 ppm	250 ppm	——	——
Butyl acrylate	141-32-2	10 ppm	20 ppm	——	——
n-Butyl alcohol	71-36-3	——	——	50 ppm	X
sec-Butyl alcohol	78-92-2	100 ppm	150 ppm	——	——
tert-Butyl alcohol	75-65-0	100 ppm	150 ppm	——	——
Butylamine	109-73-9	——	——	5 ppm	X
Butyl cellosolve (2-Butoxy ethanol)	111-76-2	25 ppm	38 ppm	——	——
tert-Butyl chromate (as CrOs)	1189-85-1	——	——	0.1 mg/m^3	X
n-Butyl glycidyl ether (BGE)	2426-08-6	25 ppm	38 ppm	——	——
n-Butyl lactate	138-22-7	5 ppm	10 ppm	—-	——
Butyl mercaptan	109-79-5	0.5 ppm	1.5 ppm	——	——
o-sec-Butylphenol	89-72-5	5 ppm	10 ppm	——	X
p-tert-Butyl-toluene	98-51-1	10 ppm	20 ppm	——	——
Cadmium oxide fume (as Cd) (see WAC 296-62-074)	1306-19-0	0.005 mg/m^3	——	——	——
Cadmium dust and salts (as Cd) (see WAC 296-62-074)	7440-43-9	0.005 mg/m^3	——	——	——
Calcium arsenate (see WAC 296-62-07347)	——	0.01 mg/m^3	——	——	——
Calcium carbonate	1317-65-3	——	——	——	——
Total particulate	——	10 mg/m^3	20 mg/m^3	——	——
Respirable fraction	——	5 mg/m^3	10 mg/m^3	——	——
Calcium cyanamide	156-62-7	0.5 mg/m^3	1.5 mg/m^3	——	——
Calcium hydroxide	1305-62-0	5 mg/m^3	10 mg/m^3	——	——
Calcium oxide	1305-78-8	2 mg/m^3	4 mg/m^3	——	——
Calcium silicate	1344-95-2	——	——	——	——
Total particulate	——	10 mg/m^3	20 mg/m^3	——	——
Respirable fraction	——	5 mg/m^3	10 mg/m^3	——	——
Calcium sulfate	7778-18-9	——	——	——	——
Total particulate	——	10 mg/m^3	20 mg/m^3	——	——
Respirable fraction	——	5 mg/m^3	10 mg/m^3	——	——
Camphor (synthetic)	76-22-2	2 mg/m^3	4 mg/m^3	——	——
Caprolactam	105-60-2	——	——	——	——
Dust	——	1 mg/m^3	3 mg/m^3	——	——
Vapor	——	5 ppm	10 ppm	——	——
Captafol (Difolatan)	2425-06-1	0.1 mg/m^3	0.3 mg/m^3	——	X
Captan	133-06-2	5 mg/m^3	10 mg/m^3	——	——
Carbaryl (Sevin)	63-25-2	5 mg/m^3	10 mg/m^3	——	——
Carbofuran (Furadon)	1563-66-2	0.1 mg/m^3	0.3 mg/m^3	——	——
Carbon black	1333-86-4	3.5 mg/m^3	7 mg/m^3	——	——
Carbon dioxide	124-38-9	5,000 ppm	30,000 ppm	——	——
Carbon disulfide	75-15-0	4 ppm	12 ppm	——	X
Carbon monoxide	630-08-0	35 ppm	200 ppm (5 min.)	1,500 ppm	——
Carbon tetrabromide	558-13-4	0.1 ppm	0.3 ppm	——	——
Carbon tetrachloride (Tetrachloromethane)	56-23-5	2 ppm	4 ppm	——	X
Carbonyl chloride (Phosgene)	7803-51-2	0.1 ppm	0.3 ppm	——	——
Carbonyl fluoride	353-50-4	2 ppm	5 ppm	——	——
Catechol (Pyrocatechol)	120-80-9	5 ppm	10 ppm	——	X
Cellosolve acetate (2-Ethoxyethylacetate)	111-15-9	5 ppm	10 ppm	——	X
Cellulose (paper fiber)	9004-34-6	——	——	——	——
Total particulate	——	10 mg/m^3	20 mg/m^3	——	——
Respirable fraction	——	5 mg/m^3	10 mg/m^3	——	——
Cesium hydroxide	21351-79-1	2 mg/m^3	4 mg/m^3	——	——

Table 3 "Permissible Exposure Limits for Air Contaminants"

Substance	CAS	TWA_8	STEL	Ceiling	Skin
Chlordane	57-74-9	0.5 mg/m^3	1.5 mg/m^3	——	X
Chlorinated camphene (Toxaphen)	8001-35-2	0.5 mg/m^3	1 mg/m^3	——	X
Chlorinated diphenyl oxide	55720-99-5	0.5 mg/m^3	1.5 mg/m^3	——	——
Chlorine	7782-50-5	0.5 ppm	——	1 ppm	——
Chlorine dioxide	10049-04-4	0.1 ppm	0.3 ppm	——	——
Chlorine trifluoride	7790-91-2	——	——	0.1 ppm	——
Chloroacetaldehyde	107-20-0	——	——	1 ppm	——
a-Chloroacetophenone (Phenacyl chloride)	532-21-4	0.05 ppm	0.15 ppm	——	——
Chloroacetyl chloride	79-04-9	0.05 ppm	0.15 ppm	——	——
Chlorobenzene (Monochlorobenzene)	108-90-7	75 ppm	113 ppm	——	——
o-Chlorobenzylidene malononitrile (OCBM)	2698-41-1	——	——	0.05 ppm	X
Chlorobromomethane	74-97-5	200 ppm	250 ppm	——	——
2-Chloro-1, 3-butadiene (beta-Chloroprene)	126-99-8	10 ppm	20 ppm	——	X
Chlorodifluoromethane	75-45-6	1,000 ppm	1,250 ppm	——	——
Chlorodiphenyl (42% Chlorine) (PCB) (Polychlorobiphenyls)	53469-21-9	1 mg/m^3	3 mg/m^3	——	X
Chlorodiphenyl (54% Chlorine) (Polychlorobiphenyls (PCB))	11097-69-1	0.5 mg/m^3	1.5 mg/m^3	——	X
1-Chloro-2, 3-epoxypropane (Epichlorhydrin)	106-89-8	2 ppm	4 ppm	——	X
2-Chloroethanol (Ethylene chlorohydrin)	107-07-3	——	——	1 ppm	X
Chloroethylene (vinyl chloride) (See WAC 296-62-07329)	75-01-4	1 ppm	5 ppm	——	——
Chloroform (Trichloromethane)	67-66-3	2 ppm	4 ppm	——	——
1-Chloro-1-nitropropane	600-25-9	2 ppm	4 ppm	——	——
bis-Chloromethyl ether (see WAC 296-62-073)	542-88-1	——	——	——	——
Chloromethyl methyl ether (Methyl chloromethyl ether) (see WAC 296-62-073)	107-30-2	——	——	——	——
Chloropentafluoroethane	76-15-3	1,000 ppm	1,250 ppm	——	——
Chloropicrin (Nitrotrichloromethane)	76-06-2	0.1 ppm	0.3 ppm	——	——
beta-Chloroprene (2-Chloro-1, 3-butadiene)	126-99-8	10 ppm	20 ppm	——	X
o-Chlorostyrene	2039-87-4	50 ppm	75 ppm	——	——
o-Chlorotoluene	95-49-8	50 ppm	75 ppm	——	——
2-Chloro-6-trichloromethyl pyridine (Nitrapyrin)	1929-82-4	——	——	——	——
Total particulate	——	10 mg/m^3	20 mg/m^3	——	——
Respirable fraction	——	5 mg/m^3	10 mg/m^3	——	——
Chlorpyrifos	2921-88-2	0.2 mg/m^3	0.6 mg/m^3	——	X
Chromic acid and chromates (as CrO3)	Varies with compound	0.1 mg/m^3	0.3 mg/m^3	——	——
Chromium, soluble, chromic and chromous salts (as Cr)	7440-47-3	0.5 mg/m^3	1.5 mg/m^3	——	——
Chromium (VI) compounds (as Cr)	——	0.05 mg/m^3	0.15 mg/m^3	——	——
Chromium metal and insoluble salts	7440-47-3	0.5 mg/m^3	1.5 mg/m^3	——	——
Chromyl chloride	14977-61-8	0.025 ppm	0.075 ppm	——	——
Chrysene (Coal tar pitch volatiles)	65996-93-2	0.2 mg/m^3	0.6 mg/m^3	——	——
Clopidol	2971-90-6	——	——	——	——
Total particulate	——	10 mg/m^3	20 mg/m^3	——	——
Respirable fraction	——	5 mg/m^3	10 mg/m^3	——	——
Coal dust (less than 5% SiO2)	——	——	——	——	——
Respirable fraction	——	2 mg/m^3	4 mg/m^3	——	——
Coal dust (greater than or equal to 5% SiO2)	——	——	——	——	——
Respirable fraction	——	0.1 mg/m^3	0.3 mg/m^3	——	——
Coal tar pitch volatiles (benzene soluble fraction) (Particulate polycyclic aromatic hydrocarbons)	65996-93-2	0.2 mg/m^3	0.6 mg/m^3	——	——
Cobalt, metal fume & dust (as Co)	7440-48-4	0.05 mg/m^3	0.15 mg/m^3	——	——

Table 3 "Permissible Exposure Limits for Air Contaminants"

Substance	CAS	TWA_8	STEL	Ceiling	Skin
Cobalt carbonyl (as Co)	10210-68-1	0.1 mg/m^3	0.3 mg/m^3	——	——
Cobalt hydrocarbonyl (as Co)	16842-03-8	0.1 mg/m^3	0.3 mg/m^3	——	——
Coke oven emissions (see WAC 296-62-200)	——	0.15 mg/m^3	——	——	——
Copper (as Cu)	7440-50-8	——	——	——	——
Fume	——	0.1 mg/m^3	0.3 mg/m^3	——	——
Dusts and mists	——	1 mg/m^3	3 mg/m^3	——	——
Cotton dust (raw) (waste sorting, blending, cleaning, willowing and garetting) (see WAC 296-62-14533)	——	1 mg/m^3	——	——	——
Corundum (Aluminum oxide)	7429-90-5	——	——	——	——
Total particulate	——	10 mg/m^3	20 mg/m^3	——	——
Respirable fraction	——	5 mg/m^3	10 mg/m^3	——	——
Crag herbicide (Sesone, Sodium-2, 4-dichloro-phenoxyethyl sulfate)	136-78-7	——	——	——	——
Total particulate	——	10 mg/m^3	20 mg/m^3	——	——
Respirable fraction	——	5 mg/m^3	10 mg/m^3	——	——
Cresol (all isomers)	1319-77-3	5 ppm	10 ppm	——	X
Crotonaldehyde	123-73-9; 4170-30-3	2 ppm	4 ppm	——	——
Crufomate	299-86-5	5 mg/m^3	10 mg/m^3	——	——
Cumene	98-82-8	50 ppm	75 ppm	——	X
Cyanamide	420-04-2	2 mg/m^3	4 mg/m^3	——	——
Cyanide (as CN)	Varies with compound	5 mg/m^3	10 mg/m^3	——	X
Cyanogen	460-19-5	10 ppm	20 ppm	——	——
Cyanogen chloride	506-77-4	——	——	0.3 ppm	——
Cyclohexane	110-82-7	300 ppm	375 ppm	——	——
Cyclohexanol	108-93-0	50 ppm	75 ppm	——	X
Cyclohexanone	108-94-1	25 ppm	38 ppm	——	X
Cyclohexene	110-83-8	300 ppm	375 ppm	——	——
Cyclohexylamine	108-91-8	10 ppm	20 ppm	——	——
Cyclonite (RDX)	121-82-4	1.5 mg/m^3	3.0 mg/m^3	——	X
Cyclopentadiene	542-92-7	75 ppm	113 ppm	——	——
Cyclopentane	287-92-3	600 ppm	750 ppm	——	——
Cyhexatin (Tricyclohexyltin hydroxide)	13121-70-5	5 mg/m^3	10 mg/m^3	——	——
2,4-D (Dichlorophenoxy-acetic acid)	94-75-7	10 mg/m^3	20 mg/m^3	——	——
DBCP (1,2-Dibromo-3-chloropropane) (See WAC 296-62-07342)	96-12-8	0.001 ppm	——	0.005 ppm	——
DDT (Dichlorodiphenyltri-chloroethane)	50-29-3	1 mg/m^3	3 mg/m^3	——	X
DDVP, (Dichlorvos)	62-73-7	0.1 ppm	0.3 ppm	——	X
Dasanit (Fensulfothion)	115-90-2	0.1 mg/m^3	0.3 mg/m^3	——	——
Decaborane	17702-41-9	0.05 ppm	0.15 ppm	——	X
Demeton	8065-48-3	0.01 ppm	0.03 ppm	——	X
Diacetone alcohol (4-hydroxy-4-methyl-2-pentanone)	123-42-2	50 ppm	75 ppm	——	——
1, 2-Diaminoethane (Ethylenediamine)	107-15-3	10 ppm	20 ppm	——	——
Diazinon	333-41-5	0.1 mg/m^3	0.3 mg/m^3	——	X
Diazomethane	334-88-3	0.2 ppm	0.6 ppm	——	——
Diborane	19287-45-7	0.1 ppm	0.3 ppm	——	——
Dibrom (see Naled)	300-76-5	3 mg/m^3	6 mg/m^3	——	X
1, 2-Dibromo-3-chloropropane (DBCP) (see WAC 296-62-07342)	96-12-8	0.001 ppm	——	0.005 ppm	——
2-N-Dibutylamino ethanol	102-81-8	2 ppm	4 ppm	——	X
Dibutyl phosphate	107-66-4	1 ppm	2 ppm	——	——
Dibutyl phthalate	84-74-2	5 mg/m^3	10 mg/m^3	——	——
Dichloroacetylene	7572-29-4	——	——-	0.1 ppm	——
o-Dichlorobenzene	95-50-1	——	——	50 ppm	——
p-Dichlorobenzene	106-46-7	75 ppm	110 ppm	——	——
3, 3'-Dichlorobenzidine (see WAC 296-62-073)	91-94-1	——	——	——	——
Dichlorodiphenyltri-chloroethane (DDT)	50-29-3	1 mg/m^3	3 mg/m^3	——	X
Dichlorodifluoromethane	75-71-8	1,000 ppm	1,250 ppm	——	——
1, 3-Dichloro-5, 5-dimethyl hydantoin	118-52-5	0.2 mg/m^3	0.4 mg/m^3	——	——
1, 1-Dichloroethane (Ethylidine chloride)	75-34-3	100 ppm	150 ppm	——	——

Table 3 "Permissible Exposure Limits for Air Contaminants"

Substance	CAS	TWA_8	STEL	Ceiling	Skin
1, 2-Dichloroethane (Ethylene dichloride)	107-06-2	1 ppm	2 ppm	——	——
1, 1-Dichloroethylene (Vinylidene chloride)	75-35-4	1 ppm	3 ppm	——	——
1, 2-Dichloroethylene (Acetylene dichloride)	540-59-0	200 ppm	250 ppm	——	——
Dichloroethyl ether	111-44-4	5 ppm	10 ppm	——	X
Dichlorofluoromethane	75-43-4	10 ppm	20 ppm	——	——
Dichloromethane (Methylene chloride) (See WAC 296-62-07470)	75-09-2	25 ppm	125 ppm	——	——
1, 1-Dichloro-1-nitroethane	594-72-9	2 ppm	10 ppm	——	——
Dichlorophenoxyacetic acid (2, 4-D)	94-75-7	10 mg/m^3	20 mg/m^3	——	——
1, 2-Dichloropropane (Propylene dichloride)	78-87-5	75 ppm	110 ppm	——	——
Dichloropropene	542-75-6	1 ppm	3 ppm	——	X
2, 2-Dichloropropionic acid	75-99-0	1 ppm	3 ppm	——	——
Dichlorotetrafluoroethane	76-14-2	1,000 ppm	1,250 ppm	——	——
Dichlorvos (DDVP)	62-73-7	0.1 ppm	0.3 ppm	——	X
Dicrotophos	141-66-2	0.25 mg/m^3	0.75 mg/m^3	——	X
Dicyclopentadiene	77-73-6	5 ppm	10 ppm	——	——
Dicyclopentadienyl iron	102-54-5	——	——	——	——
Total particulate	——	10 mg/m^3	20 mg/m^3	——	——
Respirable fraction	——	5 mg/m^3	10 mg/m^3	——	——
Dieldrin	60-57-1	0.25 mg/m^3	0.75 mg/m^3	——	X
Diethanolamine	111-42-2	3 ppm	6 ppm	——	——
Diethylamine	109-89-7	10 ppm	25 ppm	——	——
2-Diethylaminoethanol	100-37-8	10 ppm	20 ppm	——	X
Diethylene triamine	111-40-0	1 ppm	3 ppm	——	X
Diethyl ether (Ethyl ether)	60-29-7	400 ppm	500 ppm	——	——
Diethyl ketone	96-22-0	200 ppm	250 ppm	——	——
Diethyl phthalate	84-66-2	5 mg/m^3	10 mg/m^3	——	——
Difluorodibromomethane	75-61-6	100 ppm	150 ppm	——	——
Difolatan (Captafol)	2425-06-1	0.1 mg/m^3	0.3 mg/m^3	——	X
Diglycidyl ether (DGE)	2238-07-5	0.1 ppm	0.3 ppm	——	——
Dihydroxybenzene (Hydroquinone)	123-31-9	2 mg/m^3	4 mg/m^3	——	——
Diisobutyl ketone (2, 6-Dimethylheptanone)	108-83-8	25 ppm	38 ppm	——	——
Diisopropylamine	108-18-9	5 ppm	10 ppm	——	X
Dimethoxymethane (Methylal)	109-87-5	1,000 ppm	1,250 ppm	——	——
Dimethyl acetamide	127-19-5	10 ppm	20 ppm	——	X
Dimethylamine	124-40-3	10 ppm	20 ppm	——	——
4-Dimethylaminoazo benzene (see WAC 296-62-073)	60-11-7	——	——	——	——
Dimethylaminobenzene (Xylidene)	1300-73-8	2 ppm	4 ppm	——	X
Dimethylaniline (N, N-Dimethylaniline)	121-69-7	5 ppm	10 ppm	——	X
Dimethylbenzene (Xylene)	1300-73-8	100 ppm	150 ppm	——	——
Dimethyl-1, 2-dibromo-2, 2-dichloroethyl phosphate (Naled)	300-76-5	3 mg/m^3	6 mg/m^3	——	X
Dimethylformamide	68-12-2	10 ppm	20 ppm	——	X
2, 6-Dimethylheptanone (Diisobutyl ketone)	108-83-8	25 ppm	38 ppm	——	——
1, 1-Dimethylhydrazine	57-14-7	0.5 ppm	1.5 ppm	——	X
Dimethyl phthalate	131-11-3	5 mg/m^3	10 mg/m^3	——	——
Dimethyl sulfate	77-78-1	0.1 ppm	0.3 ppm	——	X
Dinitolmide (3, 5-Dinitro-o-toluamide)	148-01-6	5 mg/m^3	10 mg/m^3	——	——
Dinitrobenzene (all isomers - alpha, meta and para)	528-29-0; 99-65-0; 100-25-4	0.15 ppm	0.45 ppm	——	X
Dinitro-o-cresol	534-52-1	0.2 mg/m^3	0.6 mg/m^3	——	X
3, 5-Dinitro-o-toluamide (Dinitolmide)	148-01-6	5 mg/m^3	10 mg/m^3	——	——
Dinitrotoluene	25321-14-6	1.5 mg/m^3	3 mg/m^3	——	X
Dioxane (Diethylene dioxide)	123-91-1	25 ppm	38 ppm	——	X
Dioxathion	78-34-2	0.2 mg/m^3	0.6 mg/m^3	——	X
Diphenyl (Biphenyl)	92-52-4	0.2 ppm	0.6 ppm	——	——
Diphenylamine	122-39-4	10 mg/m^3	20 mg/m^3	——	——

Table 3 "Permissible Exposure Limits for Air Contaminants"

Substance	CAS	TWA_8	STEL	Ceiling	Skin
Diphenylmethane diisocyanate (Methylene bisphenyl isocyanate (MDI))	101-68-8	——	——	0.02 ppm	——
Dipropylene glycol methyl ether	34590-94-8	100 ppm	150 ppm	——	X
Dipropyl ketone	123-19-3	50 ppm	75 ppm	——	——
Diquat	85-00-7	0.5 mg/m^3	1.5 mg/m^3	——	——
Di-sec, Octyl phthalate (Di-2-ethylhexylphthalate)	117-81-7	5 mg/m^3	10 mg/m^3	——	——
Disulfram	97-77-8	2 mg/m^3	4 mg/m^3	——	——
Disulfoton	298-04-4	0.1 mg/m^3	0.3 mg/m^3	——	X
2, 6-Di-tert-butyl-p-cresol	128-37-0	10 mg/m^3	20 mg/m^3	——	——
Diuron	330-54-1	10 mg/m^3	20 mg/m^3	——	——
Divinyl benzene	1321-74-0	10 ppm	20 ppm	——	——
Emery	12415-34-8	——	——	——	——
Total particulate	——	10 mg/m^3	20 mg/m^3	——	——
Respirable fraction	——	5 mg/m^3	10 mg/m^3	——	——
Endosulfan (Thiodan)	115-29-7	0.1 mg/m^3	0.3 mg/m^3	——	X
Endrin	72-20-8	0.1 mg/m^3	0.3 mg/m^3	——	X
Epichlorhydrin (1-Chloro-2, 3-epoxypropane)	106-89-8	2 ppm	4 ppm	——	X
EPN	2104-64-5	0.5 mg/m^3	1.5 mg/m^3	——	X
1, 2-Epoxypropane (Propylene oxide)	75-56-9	20 ppm	30 ppm	——	——
2, 3-Epoxy-1-propanol (Glycidol)	556-52-5	25 ppm	38 ppm	——	——
Ethane	——	Simple asphyxiant	——	——	——
Ethanethiol (Ethyl mercaptan)	75-08-1	0.5 ppm	1.5 ppm	——	——
Ethanol (Ethyl alcohol)	64-17-5	1,000 ppm	1,250 ppm	——	——
Ethanolamine (2-Aminoethanol)	141-43-5	3 ppm	6 ppm	——	——
Ethion	563-12-2	0.4 mg/m^3	1.2 mg/m^3	——	X
2-Ethoxyethanol (Glycol monoethyl ether)	110-80-5	5 ppm	10 ppm	——	X
2-Ethoxyethyl acetate (Cellosolve acetate)	111-15-9	5 ppm	10 ppm	——	X
Ethyl acetate	141-78-6	400 ppm	500 ppm	——	——
Ethyl acrylate	140-88-5	5 ppm	25 ppm	——	X
Ethyl alcohol (ethanol)	64-17-5	1,000 ppm	1,250 ppm	——	——
Ethylamine	75-04-07	10 ppm	20 ppm	——	——
Ethyl amyl ketone (5-Methyl-3-hepatone)	541-85-5	25 ppm	38 ppm	——	——
Ethyl benzene	100-41-4	100 ppm	125 ppm	——	——
Ethyl bromide	74-96-4	200 ppm	250 ppm	——	——
Ethyl butyl ketone (3-Heptanone)	106-35-4	50 ppm	75 ppm	——	——
Ethyl chloride	75-00-3	1,000 ppm	1,250 ppm	——	——
Ethylene	74-85-1	Simple asphyxiant	——	——	——
Ethylene chlorohydrin (2-Chloroethanol)	107-07-3	——	——	1 ppm	X
Ethylenediamine (1,2-Diaminoethane)	107-15-3	10 ppm	20 ppm	——	X
Ethylene dibromide	106-93-4	0.1 ppm	0.5 ppm	——	——
Ethylene dichloride (1,2-Dichloroethane)	107-06-2	1 ppm	2 ppm	——	——
Ethylene glycol	107-21-1	——	——	50 ppm	——
Ethylene glycol dinitrate	628-96-6	——	0.1 mg/m^3	——	X
Ethylene glycol monomethyl ether acetate (Methyl cellosolve acetate)	——	5 ppm	10 ppm	——	X
Ethyleneimine (see WAC 296-62-073)	151-56-4	——	——	——	X
Ethylene oxide (see WAC 296-62-07359)	75-21-8	1 ppm	5 ppm	——	——
Ethyl ether (Diethyl ether)	60-29-7	400 ppm	500 ppm	——	——
Ethyl formate	109-94-4	100 ppm	125 ppm	——	——
Ethylidine chloride (1, 1-Dichloroethane)	107-06-2	1 ppm	2 ppm	——	——
Ethylidene norbornene	16219-75-3	——	——	5.0 ppm	——
Ethyl mercaptan (Ethanethiol)	75-08-1	0.5 ppm	1.5 ppm	——	——
n-Ethylmorpholine	100-74-3	5 ppm	10 ppm	——	X
Ethyl sec-amyl ketone (5-methyl-3-heptanone)	541-85-5	25 ppm	38 ppm	——	——

Table 3 "Permissible Exposure Limits for Air Contaminants"

Substance	CAS	TWA_8	STEL	Ceiling	Skin
Ethyl silicate	78-10-4	10 ppm	20 ppm	——	——
Fenamiphos	22224-92-6	0.1 mg/m^3	0.3 mg/m^3	——	X
Fensulfothion (Dasanit)	115-90-2	0.1 mg/m^3	0.3 mg/m^3	——	——
Fenthion	55-38-9	0.2 mg/m^3	0.6 mg/m^3	——	X
Ferbam	——	——	——	——	——
Total particulate	14484-64-1	10 mg/m^3	20 mg/m^3	——	——
Ferrovanadium dust	12604-58-9	1 mg/m^3	3 mg/m^3	——	——
Fluorides (as F)	Varies with compound	2.5 mg/m^3	5 mg/m^3	——	——
Fluorine	7782-41-4	0.1 ppm	0.3 ppm	——	——
Fluorotrichloromethane (see Trichlorofluoro methane)	75-69-4	——	——	1,000 ppm	——
Fonofos	944-22-9	0.1 mg/m^3	0.3 mg/m^3	——	X
Formaldehyde (see WAC 296-62-07540)	50-00-0	0.75 ppm	2 ppm	——	——
Formamide	75-12-7	20 ppm	30 ppm	——	——
Formic acid	64-18-6	5 ppm	10 ppm	——	——
Furadon (carbofuran)	1563-66-2	0.1 mg/m^3	0.3 mg/m^3	——	——
Furfural	98-01-1	2 ppm	4 ppm	——	X
Furfuryl alcohol	98-00-0	10 ppm	15 ppm	——	X
Gasoline	8006-61-9	300 ppm	500 ppm	——	——
Germanium tetrahydride	7782-65-2	0.2 ppm	0.6 ppm	——	——
Glass, fibrous or dust	——	10 mg/m^3	20 mg/m^3	——	——
Gluteraldehyde	111-30-8	——	——	0.2 ppm	——
Glycerin mist	56-81-5	——	——	——	——
Total particulate	——	10 mg/m^3	20 mg/m^3	——	——
Respirable fraction	——	5 mg/m^3	10 mg/m^3	——	——
Glycidol (2, 3-Epoxy-1-propanol)	556-52-5	25 ppm	38 ppm	——	——
Glycol monoethyl ether (2-Ethoxyethanol)	110-80-5	5 ppm	10 ppm	——	X
Grain dust (oat, wheat, barley)	——	10 mg/m^3	20 mg/m^3	——	——
Graphite, natural	7782-42-5	——	——	——	——
Respirable particulate	——	2.5 mg/m^3	5 mg/m^3	——	——
Graphite, synthetic	——	——	——	——	——
Total particulate	——	10 mg/m^3	20 mg/m^3	——	——
Respirable fraction	——	5 mg/m^3	10 mg/m^3	——	——
Guthion (Azinphosmethyl)	86-50-0	0.2 mg/m^3	0.6 mg/m^3	——	X
Gypsum	13397-24-5	——	——	——	——
Total particulate	——	10 mg/m^3	20 mg/m^3	——	——
Respirable fraction	——	5 mg/m^3	10 mg/m^3	——	——
Hafnium	7440-58-6	0.5 mg/m^3	1.5 mg/m^3	——	——
Helium	——	Simple asphyxiant	——	——	——
Heptachlor	76-44-8	0.5 mg/m^3	1.5 mg/m^3	——	X
Heptane (n-heptane)	142-82-5	400 ppm	500 ppm	——	——
2-Heptanone (Methyl n-amyl ketone)	110-43-0	50 ppm	75 ppm	——	——
3-Heptanone (Ethyl butyl ketone)	106-35-4	50 ppm	75 ppm	——	——
Hexachlorobutadiene	87-68-3	0.02 ppm	0.06 ppm	——	X
Hexachlorocyclopentadiene	77-47-4	0.01 ppm	0.03 ppm	——	——
Hexachloroethane	67-72-1	1 ppm	3 ppm	——	X
Hexachloronaphthalene	1335-87-1	0.2 mg/m^3	0.6 mg/m^3	——	X
Hexafluoroacetone	684-16-2	0.1 ppm	0.3 ppm	——	X
Hexane	——	——	——	——	——
n-hexane	110-54-3	50 ppm	75 ppm	——	——
other isomers	Varies with compound	500 ppm	1,000 ppm	——	——
2-Hexanone (Methyl-n-butyl ketone)	591-78-6	5 ppm	10 ppm	——	——
Hexone (Methyl isobutyl ketone)	108-10-1	50 ppm	75 ppm	——	——
sec-Hexyl acetate	108-84-9	50 ppm	75 ppm	——	——
Hexylene glycol	107-41-5	——	——	25 ppm	——
Hydrazine	302-01-2	0.1 ppm	0.3 ppm	——	X
Hydrogen	——	Simple asphyxiant	——	——	——
Hydrogenated terphenyls	61788-32-7	0.5 ppm	1.5 ppm	——	——
Hydrogen bromide	10035-10-6	——	——	3.0 ppm	——
Hydrogen chloride	7647-01-0	——	——	5.0 ppm	——
Hydrogen cyanide	74-90-8	——	4.7 ppm	——	X

Table 3 "Permissible Exposure Limits for Air Contaminants"

Substance	CAS	TWA_8	STEL	Ceiling	Skin
Hydrogen fluoride	7664-39-3	——	——	3 ppm	——
Hydrogen peroxide	7722-84-1	1 ppm	3 ppm	——	——
Hydrogen selenide (as Se)	7783-07-5	0.05 ppm	0.15 ppm	——	——
Hydrogen sulfide	7783-06-4	10 ppm	15 ppm	——	——
Hydroquinone (Dihydroxybenzene)	123-31-9	2 mg/m^3	4 mg/m^3	——	——
4-Hydroxy-4-methyl-2-pentanone (Diacetone alcohol)	123-42-2	50 ppm	75 ppm	——	——
2-Hydroxypropyl acrylate	99-61-1	0.5 ppm	1.5 ppm	——	X
Indene	95-13-6	10 ppm	20 ppm	——	——
Indium and compounds (as In)	7440-74-6	0.1 mg/m^3	0.3 mg/m^3	——	——
Iodine	7553-56-2	——	——	0.1 ppm	——
Iodoform	75-47-8	0.6 ppm	1.8 ppm	——	——
Iron oxide dust and fume (as Fe)	1309-37-1	——	——	——	——
Total particulate	——	5 mg/m^3	10 mg/m^3	——	——
Iron pentacarbonyl (as Fe)	13463-40-6	0.1 ppm	0.2 ppm	——	——
Iron salts, soluble (as Fe)	Varies with compound	1 mg/m^3	3 mg/m^3	——	——
Isoamyl acetate	123-92-2	100 ppm	150 ppm	——	——
Isoamyl alcohol (primary and secondary)	123-51-3	100 ppm	125 ppm	——	——
Isobutyl acetate	110-19-0	150 ppm	188 ppm	——	——
Isobutyl alcohol	78-83-1	50 ppm	75 ppm	——	——
Isooctyl alcohol	26952-21-6	50 ppm	75 ppm	——	X
Isophorone	78-59-1	4 ppm	——	5 ppm	——
Isophorone diisocyanate	4098-71-9	0.005 ppm	0.02 ppm	——	X
Isopropoxyethanol	109-59-1	25 ppm	38 ppm	——	——
Isopropyl acetate	108-21-4	250 ppm	310 ppm	——	——
Isopropyl alcohol	67-63-0	400 ppm	500 ppm	——	——
Isopropylamine	75-31-0	5 ppm	10 ppm	——	——
N-Isopropylaniline	768-52-5	2 ppm	4 ppm	——	X
Isopropyl ether	108-20-3	250 ppm	313 ppm	——	——
Isopropyl glycidyl ether (IGE)	4016-14-2	50 ppm	75 ppm	——-	——
Kaolin	——	——	——	——	——
Total particulate	——	10 mg/m^3	20 mg/m^3	——	——
Respirable fraction	——	5 mg/m^3	10 mg/m^3	——	——
Ketene	463-51-4	0.5 mg/m^3	1.5 mg/m^3	——	——
Lannate (Methomyl)	16752-77-5	2.5 mg/m^3	5 mg/m^3	——	——
Lead, inorganic (as Pb) (see WAC 296-62-07521 and 296-155-176)	7439-92-1	0.05 mg/m^3	——	——	——
Lead arsenate (as Pb) (see WAC 296-62-07347)	3687-31-8	0.05 mg/m^3	——	——	——
Lead chromate (as Pb)	7758-97-6	0.05 mg/m^3	——	——	——
Limestone	1317-65-3	——	——	——	——
Total particulate	——	10 mg/m^3	20 mg/m^3	——	——
Respirable fraction	——	5 mg/m^3	10 mg/m^3	——	——
Lindane	58-89-9	0.5 mg/m^3	1.5 mg/m^3	——	X
Lithium hydride	7580-67-8	0.025 mg/m^3	0.075 mg/m^3	——	——
L.P.G. (liquified petroleum gas)	68476-85-7	1,000 ppm	1,250 ppm	——	——
Magnesite	546-93-0	——	——	——	——
Total particulate	——	10 mg/m^3	20 mg/m^3	——	——
Respirable fraction	——	5 mg/m^3	10 mg/m^3	——	——
Magnesium oxide fume	1309-48-4	——	——	——	——
Total particulate	——	10 mg/m^3	20 mg/m^3	——	——
Malathion	121-75-5	——	——	——	——
Total particulate	——	10 mg/m^3	20 mg/m^3	——	X
Maleic anhydride	108-31-6	0.25 ppm	0.75 ppm	——	——
Manganese and compounds (as Mn)	7439-96-5	——	——	5 mg/m^3	——
Manganese cyclopentadienyl tricarbonyl (as Mn)	12079-65-1	0.1 mg/m^3	0.3 mg/m^3	——	X
Manganese tetroxide and fume (as Mn)	7439-96-5	1 mg/m^3	3 mg/m^3	——	——
Marble	1317-65-3	——	——	——	——
Total particulate	——	10 mg/m^3	20 mg/m^3	——	——
Respirable fraction	——	5 mg/m^3	10 mg/m^3	——	——
MBOCA (4, 4'-Methylene bis (2-chloro-aniline)) (see WAC 296-62-073)	101-14-4	——	——	——	X

Table 3 "Permissible Exposure Limits for Air Contaminants"

Substance	CAS	TWA_8	STEL	Ceiling	Skin
MDA (4, 4-Methylene dianiline) (see WAC 296-62-076)	101-77-9	0.01 ppm	0.1 ppm	——	X
MDI (Methylene bisphenyl isocyanate) (Diphenylmethane diisocyanate)	101-68-8	——	——	0.02 ppm	——
MEK (Methyl ethyl ketone) (2-Butanone)	78-93-3	200 ppm	300 ppm	——	——
MEKP (Methyl ethyl ketone peroxide)	1338-23-4	——	——	0.2 ppm	——
Mercury (as Hg)	7439-97-6	——	——	——	——
Aryl and inorganic	——	0.1 mg/m^3	0.3 mg/m^3	——	X
Organo-alkyl compounds	——	0.01 mg/m^3	0.03 mg/m^3	——	X
Vapor	——	0.05 mg/m^3	0.15 mg/m^3	——	X
Mesityl oxide	141-79-7	15 ppm	25 ppm	——	——
Methacrylic acid	79-41-4	20 ppm	30 ppm	——	X
Methane	——	Simple asphyxiant	——	——	——
Methanethiol (Methyl mercaptan)	74-93-1	0.5 ppm	1.5 ppm	——	——
Methanol (Methyl alcohol)	67-56-1	200 ppm	250 ppm	——	X
Methomyl (lannate)	16752-77-5	2.5 mg/m^3	5 mg/m^3	——	——
Methoxychlor	72-43-5	——	——	——	——
Total particulate	——	10 mg/m^3	20 mg/m^3	——	——
2-Methoxyethanol (Methyl cellosolve)	109-86-4	5 ppm	10 ppm	——	X
2-Methoxyethyl acetate (Methyl cellosolve acetate)	110-49-6	5 ppm	10 ppm	——	X
4-Methoxyphenol	150-76-5	5 mg/m^3	10 mg/m^3	——	——
Methyl acetate	79-20-9	200 ppm	250 ppm	——	——
Methyl acetylene (propyne)	74-99-7	1,000 ppm	1,250 ppm	——	——
Methyl acetylene-propadiene mixture (MAPP)	——	1,000 ppm	1,250 ppm	——	——
Methyl acrylate	96-33-3	10 ppm	20 ppm	——	X
Methylacrylonitrile	126-98-7	1 ppm	3 ppm	——	X
Methylal (Dimethoxy-methane)	109-87-5	1,000 ppm	1,250 ppm	——	——
Methyl alcohol (methanol)	67-56-1	200 ppm	250 ppm	——	X
Methylamine	74-89-5	10 ppm	20 ppm	——	——
Methyl amyl alcohol (Methyl isobutyl carbinol)	108-11-2	25 ppm	40 ppm	——	X
Methyl n-amyl ketone (2-Heptanone)	110-43-0	50 ppm	75 ppm	——	——
N-Methyl aniline (Monomethyl aniline)	100-61-8	0.5 ppm	1.5 ppm	——	X
Methyl bromide	74-83-9	5 ppm	10 ppm	——	X
Methyl-n-butyl ketone (2-Hexanone)	591-78-6	5 ppm	10 ppm	——	——
Methyl cellosolve (2-Methoxyethanol)	109-86-4	5 ppm	10 ppm	——	X
Methyl cellosolve acetate (2-Methoxyethyl acetate)	110-49-6	5 ppm	10 ppm	——	X
Methyl chloride	74-87-3	50 ppm	100 ppm	——	——
Methyl chloroform (1, 1, 1-trichlorethane)	71-55-6	350 ppm	450 ppm	——	——
Methyl chloromethyl ether (chloromethyl methyl ether) (see WAC 296-62-073)	107-30-2	——	——	——	——
Methyl 2-cyanoacrylate	137-05-3	2 ppm	4 ppm	——	——
Methylcyclohexane	108-87-2	400 ppm	500 ppm	——	——
Methylcyclohexanol	25639-42-3	50 ppm	75 ppm	——	——
Methylcyclohexanone	583-60-8	50 ppm	75 ppm	——	X
Methylcyclopentadienyl manganese tricarbonyl (as Mn)	12108-13-3	0.2 mg/m^3	0.6 mg/m^3	——	X
Methyl demeton	8022-00-2	0.5 mg/m^3	1.5 mg/m^3	——	X
Methylene bisphenyl isocyanate (MDI) (Diphenylmethane diisocyanate)	101-68-8	——	——	0.02 ppm	——
4, 4'-Methylene bis (2-chloro-aniline) (MBOCA) (see WAC 296-62-073)	101-14-4	——	——	——	X

Table 3 "Permissible Exposure Limits for Air Contaminants"

Substance	CAS	TWA_8	STEL	Ceiling	Skin
Methylene bis (4-cyclohexylisocyanate)	5124-30-1	——	——	0.01 ppm	——
Methylene chloride (Dichloromethane) (see WAC 296-62-07470)	75-09-2	25 ppm	125 ppm	——	——
4, 4-Methylene dianiline (MDA) (see WAC 296-62-076)	101-77-9	0.01 ppm	0.1 ppm	——	X
Methyl ethyl ketone (MEK) (2-Butanone)	78-93-3	200 ppm	300 ppm	——	——
Methyl ethyl ketone peroxide (MEKP)	1338-23-4	——	——	0.2 ppm	——
Methyl formate	107-31-3	100 ppm	150 ppm	——	——
5-Methyl-3-heptanone (Ethyl amyl ketone)	541-85-5	25 ppm	38 ppm	——	——
Methyl hydrazine (Monomethyl hydrazine)	60-34-4	——	——	0.2 ppm	X
Methyl iodide	74-88-4	2 ppm	4 ppm	——	X
Methyl isoamyl ketone	110-12-3	50 ppm	75 ppm	——	——
Methyl isobutyl carbinol (Methyl amyl alcohol)	108-11-2	25 ppm	40 ppm	——	X
Methyl isobutyl ketone (Hexone)	108-10-1	50 ppm	75 ppm	——	——
Methyl isocyanate	624-83-9	0.02 ppm	0.06 ppm	——	X
Methyl isopropyl ketone	563-80-4	200 ppm	250 ppm	——	——
Methyl mercaptan (Methanethiol)	74-93-1	0.5 ppm	1.5 ppm	——	——
Methyl methacrylate	80-62-6	100 ppm	150 ppm	——	——
Methyl parathion	298-00-0	0.2 mg/m^3	0.6 mg/m^3	——	X
Methyl propyl ketone (2-Pentanone)	107-87-9	200 ppm	250 ppm	——	——
Methyl silicate	684-84-5	1 ppm	3 ppm	——	——
alpha-Methyl styrene	98-83-9	50 ppm	100 ppm	——	——
Mevinphos (Phosdrin)	7786-34-7	0.01 ppm	0.03 ppm	——	X
Metribuzin	21087-64-9	5 mg/m^3	10 mg/m^3	——	——
Mica (Silicates) Respirable fraction	12001-26-2	3 mg/m^3	6 mg/m^3	——	——
Molybdenum (as Mo)	7439-98-7	——	——	——	——
Soluble compounds	——	5 mg/m^3	10 mg/m^3	——	——
Insoluble compounds	——	10 mg/m^3	20 mg/m^3	——	——
Monochlorobenzene (Chlorobenzene)	108-90-7	75 ppm	113 ppm	——	——
Monocrotophos (Azodrin)	6923-22-4	0.25 mg/m^3	0.75 mg/m^3	——	——
Monomethyl aniline (N-Methyl aniline)	100-61-8	0.5 ppm	1.5 ppm	——	X
Monomethyl hydrazine	——	——	——	0.2 ppm	——
Morpholine	110-91-8	20 ppm	30 ppm	——	X
Naled (Dibrom)	300-76-5	3 mg/m^3	6 mg/m^3	——	X
Naphtha	8030-30-6	100 ppm	150 ppm	——	X
Naphthalene	91-20-3	10 ppm	15 ppm	——	——
alpha-Naphthylamine (see WAC 296-62-073)	134-32-7	——	——	——	——
beta-Naphthylamine (see WAC 296-62-073)	91-59-8	——	——	——	——
Neon	7440-01-9	Simple asphyxiant	——	——	——
Nickel carbonyl (as Ni)	13463-39-3	0.001 ppm	0.003 ppm	——	——
Nickel (as Ni)	7440-02-0	——	——	——	——
Metal and insoluble compounds	——	1 mg/m^3	3 mg/m^3	——	——
Soluble compounds	——	0.1 mg/m^3	0.3 mg/m^3	——	——
Nicotine	54-11-5	0.5 mg/m^3	1.5 mg/m^3	——	X
Nitrapyrin (2-Chloro-6 trichloromethyl pyridine)	1929-82-4	——	——	——	——
Total particulate	——	10 mg/m^3	20 mg/m^3	——	——
Respirable fraction	——	5 mg/m^3	10 mg/m^3	——	——
Nitric acid	7697-37-2	2 ppm	4 ppm	——	——
Nitric oxide	10102-43-9	25 ppm	38 ppm	——	——
p-Nitroaniline	100-01-6	3 mg/m^3	6 mg/m^3	——	X
Nitrobenzene	98-95-3	1 ppm	3 ppm	——	X
4-Nitrobiphenyl (see WAC 296-62-073)	92-93-3	——	——	——	——
p-Nitrochlorobenzene	100-00-5	0.5 mg/m^3	1.5 mg/m^3	——	X
4-Nitrodiphenyl (see WAC 296-62-073)	——	——	——	——	——

Table 3 "Permissible Exposure Limits for Air Contaminants"

Substance	CAS	TWA_8	STEL	Ceiling	Skin
Nitroethane	79-24-3	100 ppm	150 ppm	——	——
Nitrogen	7727-37-9	Simple asphyxiant	——	——	——
Nitrogen dioxide	10102-44-0	——	1 ppm	——	——
Nitrogen oxide					
(Nitrous oxide)	10024-97-2	50 ppm	75 ppm	——	——
Nitrogen trifluoride	7783-54-2	10 ppm	20 ppm	——	——
Nitroglycerin	55-63-0	——	0.1 mg/m^3	——	X
Nitromethane	75-52-5	100 ppm	150 ppm	——	——
1-Nitropropane	108-03-2	25 ppm	38 ppm	——	——
2-Nitropropane	79-46-9	10 ppm	20 ppm	——	——
N-Nitrosodimethylamine					
(see WAC 296-62-073)	62-75-9	——	——	——	——
Nitrotoluene	——	——	——	——	——
o-isomer	88-72-2	2 ppm	4 ppm	——	X
m-isomer	98-08-2	2 ppm	4 ppm	——	X
p-isomer	99-99-0	2 ppm	4 ppm	——	X
Nitrotrichloromethane					
(Chloropicrin)	76-06-2	0.1 ppm	0.3 ppm	——	——
Nitrous oxide					
(Nitrogen oxide)	10024-97-2	50 ppm	75 ppm	——	——
Nonane	111-84-2	200 ppm	250 ppm	——	——
Octachloronaphthalene	2234-13-1	0.1 mg/m^3	0.3 mg/m^3	——	X
Octane	111-65-9	300 ppm	375 ppm	——	——
Oil mist mineral (particulate)	8012-95-1	5 mg/m^3	10 mg/m^3	——	——
Osmium tetroxide (as Os)	20816-12-0	0.0002 ppm	0.0006 ppm	——	——
Oxalic acid	144-62-7	1 mg/m^3	2 mg/m^3	——	——
Oxygen difluoride	7783-41-7	——	——	0.05 ppm	——
Ozone	10028-15-6	0.1 ppm	0.3 ppm	——	——
Paper fiber					
(Cellulose)	9004-34-6	——	——	——	——
Total particulate	——	10 mg/m^3	20 mg/m^3	——	——
Respirable fraction	——	5 mg/m^3	10 mg/m^3	——	——
Paraffin wax fume	8002-74-2	2 mg/m^3	4 mg/m^3	——	——
Paraquat	——	——	——	——	——
Respirable fraction	4685-14-7 1910-42-5 2074-50-2	0.1 mg/m^3	0.3 mg/m^3	——	X
Parathion	56-38-2	0.1 mg/m^3	0.3 mg/m^3	——	X
Particulate polycyclic aromatic hydrocarbons (benzene soluble fraction) (coal tar pitch volatiles)	65996-93-2	0.2 mg/m^3	0.6 mg/m^3	——	——
Particulates not otherwise regulated	——	——	——	——	——
Total particulate	——	10 mg/m^3	20 mg/m^3	——	——
Respirable fraction	——	5 mg/m^3	10 mg/m^3	——	——
Pentaborane	19624-22-7	0.005 ppm	0.015 ppm	——	——
Pentachloronaphthalene	1321-64-8	0.5 mg/m^3	1.5 mg/m^3	——	X
Pentachlorophenol	87-86-5	0.5 mg/m^3	1.5 mg/m^3	——	X
Pentaerythritol	115-77-5	——	——	——	——
Total particulate	——	10 mg/m^3	20 mg/m^3	——	——
Respirable fraction	——	5 mg/m^3	10 mg/m^3	——	——
Pentane	109-66-0	600 ppm	750 ppm	——	——
2-Pentanone					
(methyl propyl ketone)	107-87-9	200 ppm	250 ppm	——	——
Perchloroethylene					
(tetrachloroethylene)	127-18-4	25 ppm	38 ppm	——	——
Perchloromethyl mercaptan	594-42-3	0.1 ppm	0.3 ppm	——	——
Perchloryl fluoride	7616-94-6	3 ppm	6 ppm	——	——
Perlite	——	——	——	——	——
Total particulate	——	10 mg/m^3	20 mg/m^3	——	——
Respirable fraction	——	5 mg/m^3	10 mg/m^3	——	——
Petroleum distillates					
(Naptha, rubber solvent)	——	100 ppm	150 ppm	——	——
Phenacyl chloride					
(a-Chloroacetophenone)	532-21-4	0.05 ppm	0.15 ppm	——	——
Phenol	108-95-2	5 ppm	10 ppm	——	X
Phenothiazine	92-84-2	5 mg/m^3	10 mg/m^3	——	X
p-Phenylene diamine	106-50-3	0.1 mg/m^3	0.3 mg/m^3	——	X
Phenyl ether (vapor)	101-84-8	1 ppm	3 ppm	——	——
Phenyl ether-diphenyl mixture (vapor)	——	1 ppm	3 ppm	——	——
Phenylethylene (Styrene)	100-42-5	50 ppm	100 ppm	——	——

Table 3 "Permissible Exposure Limits for Air Contaminants"

Substance	CAS	TWA_8	STEL	Ceiling	Skin
Phenyl glycidyl ether (PGE)	122-60-1	1 ppm	3 ppm	——	——
Phenylhydrazine	100-63-0	5 ppm	10 ppm	——	X
Phenyl mercaptan	108-98-5	0.5 ppm	1.5 ppm	——	——
Phenylphosphine	638-21-1	——	——	0.05 ppm	——
Phorate	298-02-2	0.05 mg/m^3	0.2 mg/m^3	——	X
Phosdrin (Mevinphos)	7786-34-7	0.01 ppm	0.03 ppm	——	X
Phosgene (carbonyl chloride)	75-44-5	0.1 ppm	0.3 ppm	——	——
Phosphine	7803-51-2	0.3 ppm	1 ppm	——	——
Phosphoric acid	7664-38-2	1 mg/m^3	3 mg/m^3	——	——
Phosphorus (yellow)	7723-14-0	0.1 mg/m^3	0.3 mg/m^3	——	——
Phosphorous oxychloride	10025-87-3	0.1 ppm	0.3 ppm	——	——
Phosphorus pentachloride	10026-13-8	0.1 ppm	0.3 ppm	——	——
Phosphorus pentasulfide	1314-80-3	1 mg/m^3	3 mg/m^3	——	——
Phosphorus trichloride	12-2-19	0.2 ppm	0.5 ppm	——	——
Phthalic anhydride	85-44-9	1 ppm	3 ppm	——	——
m-Phthalodinitrile	626-17-5	5 mg/m^3	10 mg/m^3	——	——
Picloram	1918-02-1	——	——	——	——
Total particulate	——	10 mg/m^3	20 mg/m^3	——	——
Respirable fraction	——	5 mg/m^3	10 mg/m^3	——	——
Picric acid (2, 4, 6-Trinitrophenol)	88-89-1	0.1 mg/m^3	0.3 mg/m^3	——	X
Pindone (2-Pivalyl-1, 3-indandione, Pival)	83-26-1	0.1 mg/m^3	0.3 mg/m^3	——	——
Piperazine dihydrochloride	142-64-3	5 mg/m^3	10 mg/m^3	——	——
Pival (Pindone)	83-26-1	0.1 mg/m^3	0.3 mg/m^3	——	——
Plaster of Paris	26499-65-0	——	——	——	——
Total particulate	——	10 mg/m^3	20 mg/m^3	——	——
Respirable fraction	——	5 mg/m^3	10 mg/m^3	——	——
Platinum (as Pt)	7440-06-4	——	——	——	——
Metal	——	1 mg/m^3	3 mg/m^3	——	——
Soluble salts	——	0.002 mg/m^3	0.006 mg/m^3	——	——
Polychlorobiphenyls (Chlorodiphenyls)	——	——	——	——	——
42% Chlorine (PCB)	53469-21-9	1 mg/m^3	3 mg/m^3	——	X
54% Chlorine (PCB)	11097-69-1	0.5 mg/m^3	1.5 mg/m^3	——	X
Portland cement	65997-15-1	——	——	——	——
Total particulate	——	10 mg/m^3	20 mg/m^3	——	——
Respirable fraction	——	5 mg/m^3	10 mg/m^3	——	——
Potassium hydroxide	1310-58-3	——	——	2 mg/m^3	——
Propane	74-98-6	1,000 ppm	1,250 ppm	——	——
Propargyl alcohol	107-19-7	1 ppm	3 ppm	——	X
beta-Propiolactone (see WAC 296-62-073)	57-57-8	——	——	——	——
Propionic acid	79-09-4	10 ppm	20 ppm	——	——
Propoxur (Baygon)	114-26-1	0.5 mg/m^3	1.5 mg/m^3	——	——
n-Propyl acetate	109-60-4	200 ppm	250 ppm	——	——
n-Propyl alcohol	71-23-8	200 ppm	250 ppm	——	X
n-Propyl nitrate	627-13-4	25 ppm	40 ppm	——	——
Propylene	——	Simple asphyxiant	——	——	——
Propylene dichloride (1, 2-Dichloropropane)	78-87-5	75 ppm	110 ppm	——	——
Propylene glycol dinitrate	6423-43-4	0.05 ppm	0.15 ppm	——	X
Propylene glycol monomethyl ether	107-98-2	100 ppm	150 ppm	——	——
Propylene imine	75-55-8	2 ppm	4 ppm	——	X
Propylene oxide (1,2-Epoxypropane)	75-56-9	20 ppm	30 ppm	——	——
Propyne (Methyl acetylene)	74-99-7	1,000 ppm	1,250 ppm	——	——
Pyrethrum	8003-34-7	5 mg/m^3	10 mg/m^3	——	——
Pyridine	110-86-1	5 ppm	10 ppm	——	——
Pyrocatachol (Catechol)	120-80-9	5 ppm	10 ppm	——	X
Quinone (p-Benzoquinone)	106-51-4	0.1 ppm	0.3 ppm	——	——
RDX (Cyclonite)	——	1.5 mg/m^3	3 mg/m^3	——	X
Resorcinol	108-46-3	10 ppm	20 ppm	——	——
Rhodium (as Rh)	7440-16-6	——	——	——	——
Insoluble compounds, metal fumes and dusts	——	0.1 mg/m^3	0.3 mg/m^3	——	——
Soluble compounds, salts	——	0.001 mg/m^3	0.003 mg/m^3	——	——
Ronnel	299-84-3	10 mg/m^3	20 mg/m^3	——	——
Rosin core solder, pyrolysis products (as formaldehyde)	8050-09-7	0.1 mg/m^3	0.3 mg/m^3	——	——

Table 3 "Permissible Exposure Limits for Air Contaminants"

Substance	CAS	TWA_8	STEL	Ceiling	Skin
Rotenone	83-79-4	5 mg/m^3	10 mg/m^3	——	——
Rouge	——	——	——	——	——
Total particulate	——	10 mg/m^3	20 mg/m^3	——	——
Respirable fraction	——	5 mg/m^3	10 mg/m^3	——	——
Rubber solvent (naphtha)	8030-30-6	100 ppm	150 ppm	——	——
Selenium compounds (as Se)	7782-49-2	0.2 mg/m^3	0.6 mg/m^3	——	——
Selenium hexafluoride (as Se)	7783-79-1	0.05 ppm	0.15 ppm	——	——
Sesone (Crag herbicide)	136-78-7	——	——	——	——
Total particulate	——	10 mg/m^3	20 mg/m^3	——	——
Respirable fraction	——	5 mg/m^3	10 mg/m^3	——	——
Sevin (Carbaryl)	63-25-2	5 mg/m^3	10 mg/m^3	——	——
Silane (see Silicon tetrahydride)	7803-62-5	5 ppm	10 ppm	——	——
Silica, amorphous, precipitated and gel	112926-00-8	6 mg/m^3	12 mg/m^3	——	——
Silica, amorphous, diatomaceous earth, containing less than 1% crystalline silica	61790-53-2	——	——	——	——
Total particulate	——	6 mg/m^3	12 mg/m^3	——	——
Respirable fraction	——	3 mg/m^3	6 mg/m^3	——	——
Silica, crystalline cristobalite	——	——	——	——	——
Respirable fraction	14464-46-1	0.05 mg/m^3	0.15 mg/m3	——	——
Silica, crystalline quartz	——	——	——	——	——
Respirable fraction	14808-60-7	0.1 mg/m^3	0.3 mg/m^3	——	——
Silica, crystalline tripoli (as quartz)	——	——	——	——	——
Respirable fraction	1317-95-9	0.1 mg/m^3	0.3 mg/m^3	——	——
Silica, crystalline tridymite	——	——	——	——	——
Respirable fraction	15468-32-3	0.05 mg/m^3	0.15 mg/m^3	——	——
Silica, fused	——	——	——	——	——
Respirable fraction	60676-86-0	0.1 mg/m^3	0.3 mg/m^3	——	——
Silicates (less than 1% crystalline silica)	——	——	——	——	——
Mica	——	——	——	——	——
Respirable fraction	12001-26-2	3 mg/m^3	6 mg/m^3	——	——
Soapstone	——	——	——	——	——
Total particulate	——	6 mg/m^3	12 mg/m^3	——	——
Respirable fraction	——	3 mg/m^3	6 mg/m^3	——	——
Talc (containing asbestos) (see WAC 296-62-07705)	——	——	——	——	——
Talc (containing no asbestos)	——	——	——	——	——
Respirable fraction	14807-96-6	2 mg/m^3	4 mg/m^3	——	——
Tremolite (see WAC 296-62-07705)	——	——	——	——	——
Silicon	7440-21-3	——	——	——	——
Total particulate	——	10 mg/m^3	20 mg/m^3	——	——
Respirable fraction	——	5 mg/m^3	10 mg/m^3	——	——
Silicon carbide	409-21-2	——	——	——	——
Total particulate	——	10 mg/m^3	20 mg/m^3	——	——
Respirable fraction	——	5 mg/m^3	10 mg/m^3	——	——
Silicon tetrahydride (Silane)	7803-62-5	5 ppm	10 ppm	——	——
Silver, metal dust and soluble compounds (as Ag)	7440-22-4	0.01 mg/m^3	0.03 mg/m^3	——	——
Soapstone	——	——	——	——	——
Total particulate	——	6 mg/m^3	12 mg/m^3	——	——
Respirable fraction	——	3 mg/m^3	6 mg/m^3	——	——
Sodium azide (as HN3 or NaN3)	26628-22-8	——	——	0.1 ppm	X
Sodium bisulfite	7631-90-5	5 mg/m^3	10 mg/m^3	——	——
Sodium-2, 4-dichloro-phenoxyethyl sulfate (Crag herbicide)	136-78-7	——	——	——	——
Total particulate	——	10 mg/m^3	20 mg/m^3	——	——
Respirable fraction	——	5 mg/m^3	10 mg/m^3	——	——
Sodium fluoroacetate	62-74-8	0.05 mg/m^3	0.15 mg/m^3	——	X
Sodium hydroxide	1310-73-2	——	——	2 mg/m^3	——
Sodium metabisulfite	7681-57-4	5 mg/m^3	10 mg/m^3	——	——
Starch	9005-25-8	——	——	——	——
Total particulate	——	10 mg/m^3	20 mg/m^3	——	——
Respirable fraction	——	5 mg/m^3	10 mg/m^3	——	——
Stibine	7803-52-3	0.1 ppm	0.3 ppm	——	——
Stoddard solvent	8052-41-3	100 ppm	150 ppm	——	——
Strychnine	57-24-9	0.15 mg/m^3	0.45 mg/m^3	——	——

Table 3 "Permissible Exposure Limits for Air Contaminants"

Substance	CAS	TWA_8	STEL	Ceiling	Skin
Styrene (Phenylethylene,Vinyl benzene)	100-42-5	50 ppm	100 ppm	——	——
Subtilisins	9014-01-1	——	0.00006 mg/m^3 (60 min.)	——	——
Sucrose	57-50-1	——	——	——	——
Total particulate	——	10 mg/m^3	20 mg/m^3	——	——
Respirable fraction	——	5 mg/m^3	10 mg/m^3	——	——
Sulfotep (TEDP)	3689-24-5	0.2 mg/m^3	0.6 mg/m^3	——	X
Sulfur dioxide	7446-09-5	2 ppm	5 ppm	——	——
Sulfur hexafluoride	2551-62-4	1,000 ppm	1,250 ppm	——	——
Sulfuric acid	7664-93-9	1 mg/m^3	3 mg/m^3	——	——
Sulfur monochloride	10025-67-9	——	——	1 ppm	——
Sulfur pentafluoride	5714-22-1	——	——	0.01 ppm	——
Sulfur tetrafluoride	7783-60-0	——	——	0.1 ppm	——
Sulfuryl fluoride	2699-79-8	5 ppm	10 ppm	——	——
Sulprofos	35400-43-2	1 mg/m^3	3 mg/m^3	——	——
Systox (Demeton)	8065-48-3	0.01 ppm	0.03 ppm	——	X
2, 4, 5-T	93-76-5	10 mg/m^3	20 mg/m^3	——	——
Talc (containing asbestos) (see WAC 296-62-07705)	——	——	——	——	——
Talc (containing no asbestos)	——	——	——	——	——
Respirable fraction	14807-96-6	2 mg/m^3	4 mg/m^3	——	——
Tantalum	——	——	——	——	——
Metal and oxide dusts	7440-25-7	5 mg/m^3	10 mg/m^3	——	——
TDI (Toluene-2, 4-diisocyanate)	584-84-9	0.005 ppm	0.02 ppm	——	——
TEDP (Sulfotep)	3689-24-5	0.2 mg/m^3	0.6 mg/m^3	——	X
Tellurium and compounds (as Te)	13494-80-9	0.1 mg/m^3	0.3 mg/m^3	——	——
Tellurium hexafluoride (as Te)	7783-80-4	0.02 ppm	0.06 ppm	——	——
Temephos (Abate)	3383-96-8	——	——	——	——
Total particulate	——	10 mg/m^3	20 mg/m^3	——	——
Respirable fraction	——	5 mg/m^3	10 mg/m^3	——	——
TEPP	107-49-3	0.004 ppm	0.012 ppm	——	X
Terphenyls	26140-60-3	——	——	0.5 ppm	——
1, 1, 1, 2-Tetrachloro-2, 2-difluoroethane	76-11-0	500 ppm	625 ppm	——	——
1, 1, 2, 2-Tetrachloro-1, 2-difluoroethane	76-12-0	500 ppm	625 ppm	——	——
1, 1, 2, 2-Tetrachloroethane	79-34-5	1 ppm	3 ppm	——	X
Tetrachloroethylene (Perchloroethylene)	127-18-4	25 ppm	38 ppm	——	——
Tetrachloromethane (Carbon tetrachloride)	56-23-5	2 ppm	4 ppm	——	X
Tetrachloronaphthalene	1335-88-2	2 mg/m^3	4 mg/m^3	——	X
Tetraethyl lead (as Pb)	78-00-2	0.075 mg/m^3	0.225 mg/m^3	——	X
Tetrahydrofuran	109-99-9	200 ppm	250 ppm	——	——
Tetramethyl lead (as Pb)	75-74-1	0.075 mg/m^3	0.225 mg/m^3	——	X
Tetramethyl succinonitrile	3333-52-6	0.5 ppm	1.5 ppm	——	X
Tetranitromethane	509-14-8	1 ppm	3 ppm	——	——
Tetrasodium pyrophosphate	7722-88-5	5 mg/m^3	10 mg/m^3	——	——
Tetryl (2, 4, 6-trinitrophenyl-methylnitramine)	479-45-8	1.5 mg/m^3	3 mg/m^3	——	X
Thallium (soluble compounds) (as Tl)	7440-28-0	0.1 mg/m^3	0.3 mg/m^3	——	X
4, 4-Thiobis (6-tert-butyl-m-cresol)	96-69-5	——	——	——	——
Total particulate	——	10 mg/m^3	20 mg/m^3	——	——
Respirable fraction	——	5 mg/m^3	10 mg/m^3	——	——
Thiodan (Endosulfan)	115-29-7	0.1 mg/m^3	0.3 mg/m^3	——	X
Thioglycolic acid	68-11-1	1 ppm	3 ppm	——-	X
Thionyl chloride	7719-09-7	——	——	1 ppm	——
Thiram (see WAC 296-62-07519)	137-26-8	5 mg/m^3	10 mg/m^3	——	——
Tin (as Sn)	——	——	——	——	——
Inorganic compounds	7440-31-5	2 mg/m^3	4 mg/m^3	——	——
Tin (as Sn)	——	——	——	——	——
Organic compounds	7440-31-5	0.1 mg/m^3	0.3 mg/m^3	——	X
Tin oxide (as Sn)	21651-19-4	2 mg/m^3	4 mg/m^3	——	——
Titanium dioxide	13463-67-7	——	——	——	——
Total particulate	——	10 mg/m^3	20 mg/m^3	——	——
TNT (2, 4, 6-Trinitrotoluene)	118-96-7	0.5 mg/m^3	1.5 mg/m^3	——	X

Table 3 "Permissible Exposure Limits for Air Contaminants"

Substance	CAS	TWA_8	STEL	Ceiling	Skin
Toluene	108-88-3	100 ppm	150 ppm	——	——
Toluene-2, 4-diisocyanate (TDI)	584-84-9	0.005 ppm	0.02 ppm	——-	——
m-Toluidine	108-44-1	2 ppm	4 ppm	——	X
o-Toluidine	95-53-4	2 ppm	4 ppm	——	X
p-Toluidine	106-49-0	2.0 ppm	4 ppm	——	X
Toxaphene (Chlorinated camphene)	8001-35-2	0.5 mg/m^3	1 mg/m^3	——	X
Tremolite (see WAC 296-62-07705)	——	——	——	——	——
Tributyl phosphate	126-73-8	0.2 ppm	0.6 ppm	——	——
Trichloroacetic acid	76-03-9	1 ppm	3 ppm	——	——
1, 2, 4-Trichlorobenzene	120-82-1	——	——	5 ppm	——
1, 1, 1-Trichloroethane (Methyl chloroform)	71-55-6	350 ppm	450 ppm	——	——
1, 1, 2-Trichloroethane	79-00-5	10 ppm	20 ppm	——	——
Trichloroethylene	79-01-6	50 ppm	200 ppm	——	——
Trichlorofluoromethane (Fluorotrichloromethane)	75-69-4	——	——	1,000 ppm	——
Trichloromethane (Chloroform)	67-66-3	2 ppm	4 ppm	——	——
Trichloronaphthalene	1321-65-9	5 mg/m^3	10 mg/m^3	——	X
1, 2, 3-Trichloropropane	96-18-4	10 ppm	20 ppm	——	X
1, 1, 2-Trichloro-1, 2,2-trifluoroethane	76-13-1	1,000 ppm	1,250 ppm	——	——
Tricyclohexyltin hydroxide (Cyhexatin)	13121-70-5	5 mg/m^3	10 mg/m^3	——	——
Triethylamine	121-44-8	10 ppm	15 ppm	——	——
Trifluorobromomethane	75-63-8	1,000 ppm	1,250 ppm	——	——
Trimellitic anhydride	552-30-7	0.005 ppm	0.015 ppm	——	——
Trimethylamine	75-50-3	10 ppm	15 ppm	——	——
Trimethyl benzene	25551-13-7	25 ppm	38 ppm	——	——
Trimethyl phosphite	121-45-9	2 ppm	4 ppm	——	——
2, 4, 6-Trinitrophenol (Picric acid)	88-89-1	0.1 mg/m^3	0.3 mg/m^3	——	X
2, 4, 6-Trinitrophenyl-methylnitramine (Tetryl)	479-45-8	1.5 mg/m^3	3 mg/m^3	——-	X
2, 4, 6-Trinitrotoluene (TNT)	118-96-7	0.5 mg/m^3	1.5 mg/m^3	——	X
Triorthocresyl phosphate	78-30-8	0.1 mg/m^3	0.3 mg/m^3	——	X
Triphenyl amine	603-34-9	5 mg/m^3	10 mg/m^3	——	——
Triphenyl phosphate	115-86-6	3 mg/m^3	6 mg/m^3	——	——
Tungsten (as W)	7440-33-7	——	——	——	——
Soluble compounds	——	1 mg/m^3	3 mg/m^3	——	——
Insoluble compounds	——	5 mg/m^3	10 mg/m^3	——	——
Turpentine	8006-64-2	100 ppm	150 ppm	——	——
Uranium (as U)	7440-61-1	——	——	——	——
Soluble compounds	——	0.05 mg/m^3	0.15 mg/m^3	——	——
Insoluble compounds	——	0.2 mg/m^3	0.6 mg/m^3	——	——
n-Valeraldehyde	110-62-3	50 ppm	75 ppm	——	——
Vanadium (as V2O5)	——	——	——	——	——
Respirable fraction	1314-62-1	0.05 mg/m^3	0.15 mg/m^3	——	——
Vegetable oil mist	——	——	——	——	——
Total particulate	——	10 mg/m^3	20 mg/m^3	——	——
Respirable fraction	——	5 mg/m^3	10 mg/m^3	——	——
Vinyl acetate	108-05-1	10 ppm	20 ppm	——	——
Vinyl benzene (Styrene)	100-42-5	50 ppm	100 ppm	——	——
Vinyl bromide	593-60-2	5 ppm	10 ppm	——	——
Vinyl chloride (Chloroethylene) (see WAC 296-62-07329)	75-01-4	1 ppm	5 ppm	——	——
Vinyl cyanide (Acrylonitrile) (see WAC 296-62-07336)	107-13-1	2 ppm	10 ppm	——	——
Vinyl cyclohexene dioxide	106-87-6	10 ppm	20 ppm	——	X
Vinyl toluene	25013-15-4	50 ppm	75 ppm	——	——
Vinylidene chloride (1, 1-Dichloroethylene)	75-35-4	1 ppm	3 ppm	——	——
VM & P Naphtha	8032-32-4	300 ppm	400 ppm	——	——
Warfarin	81-81-2	0.1 mg/m^3	0.3 mg/m^3	——	——
Welding fumes (total particulate)	——	5 mg/m^3	10 mg/m^3	——	——
Wood dust	——	——	——	——	——
Nonallergenic; (All woods except allergenics)	——	5 mg/m^3	10 mg/m^3	——	——
Allergenics (e.g. cedar, mahogany and teak)	——	2.5 mg/m^3	5 mg/m^3	——	——

Table 3 "Permissible Exposure Limits for Air Contaminants"

Substance	CAS	TWA_8	STEL	Ceiling	Skin
Xylenes (ortho, meta, and para isomers) (Dimethylbenzene)	1330-20-7	100 ppm	150 ppm	——	——
m-Xylene alpha, alpha-diamine	1477-55-0	——	——	0.1 mg/m^3	X
Xylidine (Dimethylaminobenzene)	1300-73-8	2 ppm	4 ppm	——	X
Yttrium	7440-65-5	1 mg/m^3	3 mg/m^3	——	——
Zinc chloride fume	7646-85-7	1 mg/m^3	2 mg/m^3	——	——
Zinc chromate (as CrO3)	Varies with compound	0.05 mg/m^3	——	0.1 mg/m^3	——
Zinc oxide	1314-13-2	——	——	——	——
Total particulate	——	10 mg/m^3	20 mg/m^3	——	——
Respirable fraction	——	5 mg/m^3	10 mg/m	——	——
Zinc oxide fume	1314-13-2	5 mg/g^3	10 mg/m^3	——	——
Zinc stearate	557-05-1	——	——	——	——
Total particulate	——	10 mg/m^3	20 mg/m^3	——	——
Respirable fraction	——	5 mg/m^3	10 mg/m^3	——	——
Zirconium compounds (as Zr)	7440-67-2	5 mg/m^3	10 mg/m^3	——	——

[Statutory Authority: RCW 49.17.010, 49.17.040, 49.17.050, 49.17.060. 04-18-079, § 296-841-20025, filed 8/31/04, effective 11/1/04.]

WAC 296-841-300 Definitions.

Breathing zone

The space around and in front of an employee's nose and mouth, forming a hemisphere with a six to nine inch radius.

Ceiling

An exposure limit, measured over the shortest time period feasible, that must not be exceeded during any part of the employee's workday.

Dust

Solid particles suspended in air. Dusts are generated by handling, drilling, crushing, grinding, rapid impact, detonation, or decrepitation of organic or inorganic materials such as rock, ore, metal, coal, wood, grain, etc.

Exposed or exposure

The contact an employee has with a toxic substance, harmful physical agent or oxygen deficient condition, whether or not protection is provided by respirators or other personal protective equipment (PPE). Exposure can occur through various routes of entry, such as inhalation, ingestion, skin contact, or skin absorption.

Fume

Solid particles suspended in air, generated by condensation from the gaseous state, generally after volatilization from molten metals, etc.

Gas

A normally formless fluid which can be changed to the liquid or solid state by the effect of increased pressure or decreased temperature or both.

Mist

Liquid droplets suspended in air, generated by condensation from the gaseous to the liquid state or by breaking up a liquid into a dispersed state, such as by splashing, foaming, spraying or atomizing.

Oxygen deficient

An atmosphere with an oxygen content below 19.5% by volume.

Permissible exposure limits (PEL)

Permissible exposure limits (PELs) are employee exposures to toxic substances or harmful agents that must not be exceeded. PELs are specified in applicable WISHA rules.

Short-term exposure limit (STEL)

An exposure limit averaged over a short time period (usually measured for fifteen minutes) that must not be exceeded during any part of an employee's workday.

Time weighted average (TWA_8)

An exposure limit averaged over eight hours that must not be exceeded during an employee's workday.

Toxic substance

Any chemical substance or biological agent, such as bacteria, virus, and fungus, which is any of the following:

• Listed in the latest edition of the National Institute for Occupational Safety and Health (NIOSH) Registry of Toxic Effects of Chemical Substances (RTECS)

• Shows positive evidence of an acute or chronic health hazard in testing conducted by, or known to, the employer.

• The subject of a material safety data sheet kept by or known to the employer showing the material may pose a hazard to human health.

Vapor

The gaseous form of a substance that is normally in the solid or liquid state.

[Statutory Authority: RCW 49.17.010, 49.17.040, 49.17.050, 49.17.060. 04-18-079, § 296-841-300, filed 8/31/04, effective 11/1/04; 03-20-115, § 296-841-300, filed 10/1/03, effective 1/1/04.]

Chapter 296-842 WAC
RESPIRATORS

WAC

296-842-100 Scope.
296-842-105 Respirator program administrator.
296-842-10505 Designate a program administrator.
296-842-110 Voluntary respirator use requirements.
296-842-11005 Make sure voluntary use of respirators is safe.
296-842-11010 Keep voluntary use program records.
296-842-120 Written respirator program and recordkeeping.
296-842-12005 Develop and maintain a written program.
296-842-12010 Keep respirator program records.
296-842-130 Respirator selection.
296-842-13005 Select and provide appropriate respirators.
296-842-140 Medical evaluations.
296-842-14005 Provide medical evaluations.
296-842-150 Fit testing.
296-842-15005 Conduct fit testing.
296-842-160 Training.
296-842-16005 Provide effective training.
296-842-170 Maintenance.

296-842-17005 Maintain respirators in a clean and reliable condition.
296-842-17010 Store respirators properly.
296-842-17015 Inspect and repair respirators.
296-842-180 Safe use and removal of respirators.
296-842-18005 Prevent sealing problems with tight-fitting respirators.
296-842-18010 Make sure employees leave the use area before removing respirators.
296-842-190 Standby requirements for immediately dangerous to life or health (IDLH) conditions.
296-842-19005 Provide standby assistance in immediately dangerous to life or health (IDLH) conditions.
296-842-200 Air quality for self-contained breathing apparatus (SCBA) and air-line respirators.
296-842-20005 Make sure breathing air and oxygen meet established specifications.
296-842-20010 Prevent conditions that could create a hazardous breathing air supply.
296-842-20015 Make sure compressors do not create a hazardous breathing air supply.
296-842-210 Labeling of air-purifying respirator filters, cartridges, and canisters.
296-842-21005 Keep labels readable on respirator filters, cartridges, and canisters during use.
296-842-220 Required procedures for respiratory protection program.
296-842-22005 Use this medical questionnaire for medical evaluations.
296-842-22010 Follow these fit-testing procedures for tight-fitting respirators.
296-842-22015 Follow procedures established for cleaning and disinfecting respirators.
296-842-22020 Follow procedures established for seal checking respirators.
296-842-300 Definitions.

WAC 296-842-100 Scope. This chapter applies to all use of respirators at work.

IMPORTANT:

Before you decide to use respirators, you are required to evaluate respiratory hazards and implement control methods as outlined in chapter 296-841 WAC, Respiratory hazards.

The term "respiratory hazards" will be used throughout this chapter to refer to oxygen deficient conditions and harmful airborne hazards.

Definition:

Respirators are a type of personal protective equipment designed to protect the wearer from respiratory hazards.

You can use Table 1 for general guidance on which chapter sections apply to you.

Table 1
Chapter sections that apply to your workplace

If employees...	**Then the sections marked with an "X" apply...**					
	105	110	120	130-210	220	300
Request and are **permitted** to voluntarily use filtering-facepiece respirators, and are not exposed to a respiratory hazard		X				X
Request and are **permitted** to voluntarily use respirators that are **NOT** filtering-facepiece respirators, and are not exposed to a respiratory hazard	X	X			X	X
Are **required** to use any respirator by WISHA or the employer	X		X	X	X	X
Would use an **escape respirator** in an emergency	X		X	X	X	X

Reference: See WAC 296-800-160, Personal protective equipment (PPE) to find requirements for other types of personal protective equipment (PPE), such as eye, hand, and head protection.

[Statutory Authority: RCW 49.17.010, 49.17.040, 49.17.050, and 49.17.060. 03-20-114, § 296-842-100, filed 10/1/03, effective 1/1/04.]

WAC 296-842-105 Respirator program administrator.

Your responsibility:

To make sure a capable individual is in charge of respirator program development and management.

[Statutory Authority: RCW 49.17.010, 49.17.040, 49.17.050, and 49.17.060. 03-20-114, § 296-842-105, filed 10/1/03, effective 1/1/04.]

WAC 296-842-10505 Designate a program administrator.

Exemption: You do not need to designate a program administrator if employees use only filtering-facepiece respirators and do so only as voluntary use.

Definition:

Voluntary use is respirator use that is requested by the employee AND permitted by the employer when **NO** respiratory hazard exists.

You must:

• Designate a program administrator who has overall responsibility for your program and has sufficient training or experience to:

– Oversee program development and coordinate implementation

– Conduct required evaluations of program effectiveness outlined in WAC 296-842-12005.

[Statutory Authority: RCW 49.17.010, 49.17.040, 49.17.050, and 49.17.060. 03-20-114, § 296-842-10505, filed 10/1/03, effective 1/1/04.]

WAC 296-842-110 Voluntary respirator use requirements. Your responsibility:

To make sure voluntary use of respirators by employees does not create job safety or health hazards.

You must:

Make sure voluntary use of respirators is safe
WAC 296-842-11005
Keep voluntary use respirator program records
WAC 296-842-11010.

IMPORTANT:

• Respirator use is NOT voluntary if a respiratory hazard, such as exposure to a substance over the permissible exposure limit (PEL) or hazardous exposure to an airborne biological hazard, is present.

• To evaluate respiratory hazards in your workplace, see chapter 296-841 WAC, Respiratory hazards.

• Some requirements in this section do not apply if only filtering-facepiece respirators are used voluntarily. Some filtering-facepiece respirators are equipped with a sorbent layer for absorbing "nuisance" organic vapors. These can be used for voluntary use, but are not NIOSH certified for protection against hazardous concentrations of organic vapor.

[Statutory Authority: RCW 49.17.010, 49.17.040, 49.17.050, and 49.17.060. 03-20-114, § 296-842-110, filed 10/1/03, effective 1/1/04.]

WAC 296-842-11005 Make sure voluntary use of respirators is safe.

Definition:

Voluntary use is respirator use that is requested by the employee AND permitted by the employer when **NO** respiratory hazard exists.

IMPORTANT: If you choose to require respirator use, use is NOT voluntary and the required use sections of this chapter apply.

You must:

(1) Make sure voluntary respirator use does **NOT:**

• Interfere with an employee's ability to work safely, such as restricting necessary vision or radio communication

OR

• Create health hazards.

Note: Examples of health hazards include:
- Skin irritation, dermatitis, or other health effects caused by using a dirty respirator
- Illness created by sharing contaminated respirators
- Health effects caused by use of an unsafe air supply, such as carbon monoxide poisoning.

You must:

(2) Provide all voluntary respirator users with the advisory information in Table 2 at no cost to them.

Note: If you have provided employees with the advisory information required in the previous rule, WAC 296-62-07117, you do not need to provide the additional information in Table 2 to those employees.

You must:

(3) Develop and maintain a written program that includes the following:

Exemption: If employees use only filtering-facepiece respirators and do so only voluntarily, you do not need to develop and maintain a written program.

• Medical evaluation provisions as specified in WAC 296-842-140.

• Procedures to properly clean and disinfect respirators, according to WAC 296-842-22015, if they are reused.

• How to properly store respirators, according to WAC 296-842-17010, so that using them does not create hazards.

• Procedures to make sure there is a safe air supply, according to WAC 296-842-200, when using air-line respirators and SCBAs.

• Training according to WAC 296-842-160 when necessary to ensure respirator use does NOT create a hazard.

Note:
- Pay for medical evaluations, training, travel related costs, and wages. You do **NOT** need to pay for respirators employees use only voluntarily.
- If you have both voluntary and required respirator users, you may choose to treat voluntary users as required users. Doing this exceeds the requirements in this section.

Use Table 2 to provide information to employees who voluntarily use any type of respirator.

Table 2

Advisory Information for Employees Who Voluntarily Use Respirators
• Respirators protect against airborne hazards when properly selected and used. WISHA recommends voluntary use of respirators when exposure to substances is below WISHA permissible exposure limits (PELs) because respirators can provide you an additional level of comfort and protection. • If you choose to voluntarily use a respirator (whether it is provided by you or your employer) be aware that **respirators can create hazards for you,** the user. You can avoid these hazards if you know how to use your respirator properly AND how to keep it clean. Take these steps: – Read and follow all instructions provided by the manufacturer about use, maintenance (cleaning and care), and warnings regarding the respirator's limitations. – Choose respirators that have been certified for use to protect against the substance of concern. The National Institute for Occupational Safety and Health (NIOSH) certifies respirators. If a respirator is not certified by NIOSH, you have no guarantee that it meets minimum design and performance standards for workplace use. ■ A NIOSH approval label will appear on or in the respirator packaging. It will tell you what protection the respirator provides. – Keep track of your respirator so you do not mistakenly use someone else's. – **DO NOT** wear your respirator into: ■ Atmospheres containing hazards that your respirator is not designed to protect against. For example, a respirator designed to filter dust particles will not protect you against solvent vapor, smoke or oxygen deficiency. ■ Situations where respirator use is required.

[Statutory Authority: RCW 49.17.010, 49.17.040, 49.17.050, and 49.17.060. 03-20-114, § 296-842-11005, filed 10/1/03, effective 1/1/04.]

WAC 296-842-11010 Keep voluntary use program records.

Exemption: If employees use only filtering-facepiece respirators voluntarily, you do not need to follow these recordkeeping requirements.

You must:

• Keep copies of:

– Your current written respirator program

– Written recommendations from the LHCP

• Allow records required by this section to be examined and copied by affected employees and their representatives.

Reference: See chapter 296-62 WAC, Part B, Access to records for additional requirements that apply to medical records.

[Statutory Authority: RCW 49.17.010, 49.17.040, 49.17.050, and 49.17.060. 03-20-114, § 296-842-11010, filed 10/1/03, effective 1/1/04.]

WAC 296-842-120 Written respirator program and recordkeeping.

Your responsibility:

To develop, implement, and maintain a written program that provides clear instruction for safe and reliable respirator use.

You must:

Develop and maintain a written program

WAC 296-842-12005

Keep respirator program records

WAC 296-842-12010.

[Statutory Authority: RCW 49.17.010, 49.17.040, 49.17.050, and 49.17.060. 03-20-114, § 296-842-120, filed 10/1/03, effective 1/1/04.]

WAC 296-842-12005 Develop and maintain a written program.

Exemption: This section does NOT apply to respirator use that is voluntary. See WAC 296-842-11005 for voluntary use program requirements.

You must:

(1) Develop a complete worksite-specific written respiratory protection program that includes the applicable elements listed in Table 3.

Note: Pay for respirators, medical evaluations, fit testing, training, maintenance, travel costs, and wages.

You must:

(2) Keep your program current and effective by evaluating it and making corrections. Do ALL of the following:

• Make sure procedures and program specifications are followed and appropriate.

• Make sure selected respirators continue to be effective in protecting employees. For example:

– If changes in work area conditions, level of employee exposure, or employee physical stress have occurred, you need to reevaluate your respirator selection.

• Have supervisors periodically monitor employee respirator use to make sure employees are using them properly.

• Regularly ask employees required to use respirators about their views concerning program effectiveness and whether they have problems with:

– Respirator fit during use

– Any effects of respirator use on work performance

– Respirators being appropriate for the hazards encountered

– Proper use under current worksite conditions

– Proper maintenance.

When developing your written program include applicable elements listed in Table 3.

Table 3

Required Elements for Required-Use Respirator Programs
• Selection: – Procedures for respirator selection – A list specifying the appropriate respirator for each respiratory hazard in your workplace – Procedures for issuing the proper type of respirator, if appropriate
• Medical evaluation provisions
• Fit-test provisions and procedures, if tight-fitting respirators are selected
• Training provisions that address: – Respiratory hazards encountered during: ■ Routine activities ■ Infrequent activities, for example, bimonthly cleaning of equipment ■ Reasonably foreseeable emergencies, for example, rescue, spill response, or escape situations – Proper use of respirators, for example, how to put on or remove respirators, and use limitations. **Note:** You do NOT need to repeat training on respiratory hazards if employees have been trained on this in compliance with other rules such as WAC 296-800-170, employer chemical hazard communication in the WISHA safety and health core rules.
• Respirator use procedures for: – Routine activities – Infrequent activities – Reasonably foreseeable emergencies
• Maintenance: – Procedures and schedules for respirator maintenance covering: ■ Cleaning and disinfecting ■ Storage ■ Inspection and repair ■ When to discard respirators – A cartridge or canister change schedule IF air-purifying respirators are selected for use against gas or vapor contaminants AND an end-of-service-life-indicator (ESLI) is not available. In addition, provide: ■ The data and other information you relied on to calculate change schedule values (for example, highest contaminant concentration estimates, duration of employee respirator use, expected maximum humidity levels, user breathing rates, and safety factors)
• Procedures to ensure a safe air quantity and quality IF atmosphere-supplying respirators (air-line or SCBA) are selected
• Procedures for evaluating program effectiveness on a regular basis

[Statutory Authority: RCW 49.17.010, 49.17.040, 49.17.050, and 49.17.060. 03-20-114, § 296-842-12005, filed 10/1/03, effective 1/1/04.]

WAC 296-842-12010 Keep respirator program records.

You must:

• Keep the following records:

– Your current respirator program

– Each employee's current fit test record, if fit testing is conducted. Fit test records must include:

■ Employee name

■ Test date

■ Type of fit-test performed

■ Description (type, manufacturer, model, style, and size) of the respirator tested

■ Results of fit tests, for example, for quantitative fit tests include the overall fit factor AND a print out, or other recording of the test.

– Training records that include employee's names and the dates trained

– Written recommendations from the LHCP.

• Allow records required by this section to be examined and copied by affected employees and their representatives.

Reference: See chapter 296-62 WAC, Part B, Access to records, for additional requirements that apply to medical records.

[Statutory Authority: RCW 49.17.010, 49.17.040, 49.17.050, and 49.17.060. 03-20-114, § 296-842-12010, filed 10/1/03, effective 1/1/04.]

WAC 296-842-130 Respirator selection.

Your responsibility:

To select and provide respirators that are appropriate for the hazard, user, and worksite conditions.

Exemption: This section does NOT apply to voluntary respirator use. See WAC 296-842-110 of this chapter for voluntary use program requirements.

[Statutory Authority: RCW 49.17.010, 49.17.040, 49.17.050, and 49.17.060. 03-20-114, § 296-842-130, filed 10/1/03, effective 1/1/04.]

WAC 296-842-13005 Select and provide appropriate respirators.

IMPORTANT:

See chapter 296-841, Respiratory hazards, for:

• Hazard evaluation requirements. Evaluation results are necessary for respirator selection.

• A list of substance-specific rules that may also apply to you. Those listed rules have additional respirator selection requirements.

You must:

• Select and provide, at no cost to employees, appropriate respirators for routine use, infrequent use, and reasonably foreseeable emergencies (such as escape, emergency, and spill response situations) by completing the following process:

Respirator Selection Process

Step 1: If your only respirator use is for escape, skip to **Step 9** to select appropriate respirators.

Step 2: If the respiratory hazard is a biological aerosol, such as TB (tuberculosis), anthrax, psittacosis (parrot fever), or hanta virus, select a respirator appropriate for **nonemergency** activities recognized to present a health risk to workers AND skip to **Step 9.**

• If respirator use will occur during **emergencies,** skip to **Step 9** and document the analysis used to select the appropriate respirator.

• Use Centers for Disease Control (CDC) selection guidance for exposures to specific biological agents when this guidance exists. Visit http://www.cdc.gov.

Step 3: If the respiratory hazard is a pesticide, follow the respirator specification on the pesticide label AND skip to **Step 10.**

Step 4: Determine the expected exposure concentration for each respiratory hazard of concern. Use the results from the evaluation required by chapter 296-841 WAC, Respiratory hazards.

Step 5: Determine if the respiratory hazard is classified as IDLH; if it is NOT IDLH skip to **Step 8.**

• The respiratory hazard **IS** classified as IDLH if:

– The atmosphere is oxygen deficient or oxygen enriched

OR

– You CANNOT measure or estimate your expected exposure concentration

OR

– Your measured or estimated expected exposure concentration is greater or equal to the IDLH value in the NIOSH *Pocket Guide to Chemical Hazards*

Note:
- WISHA uses the IDLH values in the 1990 edition of the NIOSH *Pocket Guide to Hazardous Chemicals* to determine the existence of IDLH conditions. You may use more recent editions of this guide. Visit www.cdc.gov/niosh for more information.
- If your measured or estimated expected exposure concentration is below NIOSH's IDLH values, proceed to **Step 8.**

Step 6: Select an appropriate respirator from one of the following respirators for IDLH conditions and skip to **Step 9:**

• Full-facepiece, pressure demand, self-contained breathing apparatus (SCBA) certified by NIOSH for a minimum service life of thirty minutes

OR

• Full-facepiece, pressure demand air-line respirator equipped with an auxiliary self-contained air supply

Exception: If the respiratory hazard is oxygen deficiency AND you can show oxygen concentrations can be controlled within the ranges listed in Table 4 under ALL foreseeable conditions, you are allowed to select **ANY** type of SCBA or air-line respirator:

Table 4
Concentration Ranges for Oxygen Deficiency

Altitude (as ft. above sea level)	**Oxygen Concentration Range** (as percent oxygen)
Below 3,001	16.0 - 19.5
3,001 - 4,000	16.4 - 19.5
4,001 - 5,000	17.1 - 19.5
5,001 - 6,000	17.8 - 19.5
6,001 - 8,000	19.3 - 19.5
Above 8,000 feet the exception does not apply.	

Step 8: Identify respirator types with assigned protection factors (APFs) from Table 5 that are appropriate to protect employees from the expected exposure concentration.

Step 9: Consider hazards that could require selection of specific respirator types. For example, select full-facepiece respirators to prevent eye irritation or abrasive blasting helmets to provide particle rebound protection.

Step 10: Evaluate user and workplace factors that might compromise respirator performance, reliability or safety.

• If the respiratory hazard is a pesticide, follow the requirements on the pesticide label and skip to **Step 12.**

Examples:

• High humidity or temperature extremes in the workplace.

• Necessary voice communication.

• High traffic areas and moving machinery.

• Time or distance for escape.

Step 11: Follow Table 6 requirements to select an air-purifying respirator.

• If Table 6 requirements cannot be met, you must select an air-line respirator or an SCBA.

Step 12: Make sure respirators you select are certified by the National Institute for Occupational Safety and Health (NIOSH).

• To maintain certification, make sure the respirator is used according to cautions and limitations specified on the NIOSH approval label.

Note: While selecting respirators, you will need to select a sufficient number of types, models or sizes to provide for fit testing. You can also consider other respirator use issues, such as accommodating facial hair with a loose fitting respirator.

Use Table 5 to identify the assigned protection factor for different types of respirators.

Table 5
Assigned Protection Factors (APF) for Respirator Types

If the respirator is a(n) . . .	Then the APF is . . .
Air-purifying respirator with a: • Half-facepiece . . . . . . • Full-facepiece . . . . . . **Note:** Half-facepiece includes 1/4 masks, filtering facepieces, and elastomeric facepieces.	 10 100
Powered air-purifying respirator (PAPR) with a: • Loose-fitting facepiece . . . . . . • Half-facepiece . . . . . . • Full-facepiece, equipped with HEPA filters, chemical cartridges or canisters . . . . . . • Hood or helmet, equipped with HEPA filters, chemical cartridges or canisters	 25 50 1000 1000
Air-line respirator with a: • Half-facepiece and designed to operate in demand mode . . . . . . • Loose-fitting facepiece and designed to operate in continuous flow mode . . . . . . • Half-facepiece and designed to operate in continuous-flow, or pressure-demand mode . . . . . . • Full-facepiece and designed to operate in demand mode . . . . . . • Full-facepiece and designed to operate in continuous-flow OR pressure-demand mode	 10 25 50 100 1000
• Helmet or hood and designed to operate in continuous-flow mode	1000
Self-contained breathing apparatus (SCBA) with a tight fitting: • Half-facepiece and designed to operate in demand mode . . . . . . • Full-facepiece and designed to operate in demand mode . . . . . . • Full-facepiece and designed to operate in pressure-demand mode . . . . . . Combination respirators: • Find the APF for each type of respirator in the combination. • Use the lower APF to represent the combination.	 10 100 10,000 The lowest value

Use Table 6 to select air-purifying respirators for particle, vapor, or gas contaminants.

Table 6
Requirements for Selecting Any Air-purifying Respirator

If the contaminant is a . . .	Then . . .
• Gas OR vapor	• Provide a respirator with canisters or cartridges equipped with a NIOSH-certified, end-of-service-life indicator (ESLI) **OR** • If a canister or cartridge with an ESLI is NOT available, develop a cartridge change schedule to make sure the canisters or cartridges are replaced before they are no longer effective **OR** • Select an atmosphere-supplying respirator
• Particle, such as a dust, spray, mist, fog, fume, or aerosol	• Select respirators with filters certified to be at least 95% efficient by NIOSH – For example, N95s, R99s, P100s, or High Efficiency Particulate Air filters (HEPA) **OR** • You may select respirators NIOSH certified as "dust and mist," "dust, fume, or mist," OR "pesticides." You can only use these respirators if particles primarily have a mass median aerodynamic diameter of at least two micrometers. **Note:** These respirators are no longer sold for occupational use.

[Statutory Authority: RCW 49.17.010, 49.17.040, 49.17.050, and 49.17.060. 03-20-114, § 296-842-13005, filed 10/1/03, effective 1/1/04.]

WAC 296-842-140 Medical evaluations.

Your responsibility:

To make sure a respirator used under your specific worksite conditions is not a health risk to employees.

Exemption: This section does **NOT** apply to employees who **only** use:
- Filtering-facepiece respirators voluntarily. See WAC 296-842-110 of this chapter for voluntary use requirements

OR
- Escape-only respirators that are mouthpiece, loose-fitting, or hooded respirators.

IMPORTANT:

• Using a respirator can create physical risks for an employee each time it is worn. The extent of these risks depends on these factors:

• Type of respirator

• Environmental conditions at the worksite

• Physical demands of the work

• Use of other protective clothing

• Employee's health status.

[Statutory Authority: RCW 49.17.010, 49.17.040, 49.17.050, and 49.17.060. 03-20-114, § 296-842-140, filed 10/1/03, effective 1/1/04.]

WAC 296-842-14005 Provide medical evaluations.

IMPORTANT:

If you have provided an employee with a medical evaluation addressing respirator use, as required by another chapter, that evaluation will meet the requirements of this section.

You must:

• Follow the medical evaluation process, Steps 1 through 7 in this section, to provide medical evaluations for employees at no cost to them.

Medical Evaluation Process

Step 1: Identify employees who need medical evaluations AND determine the frequency of evaluations from Table 7. Include employees who:

• Are required to use respirators

OR

• Voluntarily use respirators that are **not** filtering-facepiece respirators

Note: You may use a previous employer's medical evaluation for an employee if you can:
- Show the employee's previous work and use conditions were substantially similar to yours

AND
- Obtain a copy of the licensed health care professional's (LHCP's) written recommendation approving the employee's use of the respirator chosen by you.

Step 2: Identify a licensed health care professional (LHCP) to perform your medical evaluations.

Note: If you select a different LHCP, you do not need to have new medical evaluations done.

Step 3: Make sure your LHCP has the following information **before** the evaluation is completed:

• Information describing the respirators employees may use, including the weight and type.

• How the respirators will be used, including:

– How often the respirator will be used, for example, daily, or once a month

– The duration of respirator use, for example, a minimum of one hour, or up to twelve hours

– The employee's expected physical work effort

– Additional personal protective clothing and equipment to be worn

– Temperature and humidity extremes expected during use

• A copy of your written respiratory protection program **and** this chapter.

Note:
- You may choose to send the questionnaire to the LHCP ahead of time, giving time to review it and add any necessary questions
- The LHCP determines what questions to add to the questionnaire, if any; however, questions in Parts 1-3 may not be deleted or substantially altered.

Step 4: Administer the medical questionnaire in WAC 296-842-22005 to employees, OR provide them a medical exam that obtains the same information.

Note: You may use on-line questionnaires if the questions are the same and requirements of this section are met.

• Administer the examination or questionnaire at no cost to employees:

– During the employee's normal working hours

OR

– At a time and place convenient to the employee

• Maintain employee confidentiality during examination or questionnaire administration:

– Do **not** view employee's answers on the questionnaire

– Do **not** act in a manner that may be considered a breach of confidentiality

Note: Providing confidentiality is important for securing successful medical evaluations. It helps make sure the LHCP gets complete and dependable answers on the questionnaire.

• Make sure employees understand the content of the questionnaire.

• Provide the employee with an opportunity to discuss the questionnaire or exam results with the LHCP.

Step 5: Provide follow-up evaluation for employees when:

• The LHCP needs more information to make a final recommendation

OR

• An employee gives any positive response to questions 1-8 in Part 2 OR to questions 1-6 in Part 3 of the WISHA medical evaluation questionnaire in WAC 296-842-22005.

Note: Follow-up may include:
- Employee consultation with the LHCP such as a telephone conversation to evaluate positive questionnaire responses
- Medical exams
- Medical tests or other diagnostic procedures.

Step 6: Obtain a written recommendation from the LHCP that contains only the following medical information:

• Whether or not the employee is medically able to use the respirator

• Any limitations of respirator use for the employee

• What future medical evaluations, if any, are needed

• A statement that the employee has been provided a copy of the written recommendation.

Step 7: Provide a powered, air-purifying respirator (PAPR) when the LHCP determines the employee should not wear a negative-pressure air-purifying respirator **AND** is able to wear a PAPR.

Reference: See WAC 296-842-130 for requirements regarding selection of air-purifying respirators.

Note:
- You may discontinue medical evaluations for an employee when the employee no longer uses a respirator.
- If you have staff conducting your medical evaluations, they may keep completed questionnaires and findings as confidential medical records, if they are maintained separately from other records.

Use Table 7 to determine medical evaluation frequency.

Table 7
Evaluation Frequency

Type of Evaluation:	When required:
Initial medical evaluations	• Before respirators are fit-tested or used in the workplace.
Subsequent medical evaluations	• If any of these occur: – Your licensed health care professional (LHCP) recommends them; for example, periodic evaluations at specified intervals. – A respirator program administrator or supervisor informs you that an employee needs reevaluation. – Medical signs or symptoms (such as breathing difficulties) are: ■ Observed during fit testing or program evaluation **OR** ■ Reported by the employee – Changes in worksite conditions such as physical work effort, personal protective clothing, or temperature that could substantially increase the employee's physiological stress.

[Statutory Authority: RCW 49.17.010, 49.17.040, 49.17.050, and 49.17.060. 03-20-114, § 296-842-14005, filed 10/1/03, effective 1/1/04.]

WAC 296-842-150 Fit testing.

Your responsibility:

To make sure negative and positive-pressure tight-fitting respirators can provide an adequate fit and acceptable level of comfort to employees.

Exemption: This section does **NOT** apply to any respirators that are:
- Voluntarily used. See WAC 296-842-110 for voluntary use requirements.
- Mouthpiece respirators.

IMPORTANT:

• Fit testing is an activity where the seal of a respirator is tested to determine if it is adequate.

• This section covers general **requirements** for fit testing. Fit testing **procedures** are covered in WAC 296-842-22010 of this chapter.

[Statutory Authority: RCW 49.17.010, 49.17.040, 49.17.050, and 49.17.060. 03-20-114, § 296-842-150, filed 10/1/03, effective 1/1/04.]

WAC 296-842-15005 Conduct fit testing.

You must:

• Provide, at no cost to the employee, fit tests for ALL tight fitting respirators on the following schedule:

– Before employees are assigned duties that may require the use of respirators

– At least every twelve months after initial testing

– Whenever any of the following occurs:

■ A different respirator facepiece is chosen such as a different type, model, style, or size

■ You become aware of a physical change in an employee that could affect respirator fit. For example, you may observe, or be told about, facial scarring, dental changes, cosmetic surgery, or obvious weight changes

■ An employee notifies you, or your LHCP, that the respirator fit is unacceptable. During the retest, you must give an employee reasonable opportunity to select a different respirator facepiece (size, model, etc.).

Note: You may accept a fit test completed by a previous employer **IF:**
- You obtain written documentation of the fit test

AND
- The results of the fit test are not more than twelve months old

AND
- The employee will use the same respirator (the same type, model, style, and size)

AND
- The fit test was conducted in a way that meets the requirements of WAC 296-842-150 and 296-842-22010.

You must:

• Select an appropriate fit-testing procedure from WAC 296-842-22010 of this chapter AND:

– Use quantitative fit-test methods when a negative pressure respirator will be used in concentrations requiring a protection factor greater than 10. This includes:

■ Full facepiece air-purifying respirators

■ SCBAs operated in demand (negative pressure) mode

■ Air-line respirators operated in demand mode.

– Make sure PAPRs, SCBAs, or air-line respirators are fit tested in negative-pressure mode.

• Make sure the person conducting fit testing is able to do ALL of the following:

– Prepare test solutions if required

– Make sure equipment works properly

– Perform tests properly

– Recognize invalid tests

– Calculate fit factors properly if required.

Note:
- No specific training program or certification is required for those who conduct fit tests.
- You should consider evaluating these individuals to determine their proficiency in the fit-testing method to be used.
- You can use an evaluation form such as the form included in the American National Standard for Respirator Fit Testing Methods, ANSI/AIHA Z88.10-2001 to determine if the individual meets these requirements. Visit www.ansi.org or www.aiha.org.

[Statutory Authority: RCW 49.17.010, 49.17.040, 49.17.050, and 49.17.060. 03-20-114, § 296-842-15005, filed 10/1/03, effective 1/1/04.]

WAC 296-842-160 Training.

Your responsibility:

To make sure employees who are required to use respirators understand and can demonstrate proper respirator use and maintenance.

IMPORTANT:

This section applies to employees who voluntarily use respirators only when training is necessary to prevent the respirator from creating a hazard. See WAC 296-842-110 for voluntary use requirements.

[Statutory Authority: RCW 49.17.010, 49.17.040, 49.17.050, and 49.17.060. 03-20-114, § 296-842-160, filed 10/1/03, effective 1/1/04.]

WAC 296-842-16005 Provide effective training.

You must:

• Train employees, based on their duties, if they do any of the following:

– Use respirators

– Supervise respirator users

– Issue, repair, or adjust respirators

• Present effective training in a way that employees understand.

Note:
- Training may be provided using audiovisuals, slide presentations, formal classroom instruction, informal discussions during safety meetings, training programs conducted by outside sources, or a combination of these methods.
- You may want to have instructors available when using video or automated training methods to:
  - Encourage and provide responses to questions for the benefit of employees
  - Evaluate employees' understanding of the material
  - Provide other instructional interaction to employees.

You must:

• Make sure a qualified instructor provides training

• Provide training, at no cost to the employee, at these times:

– Initially, before worksite respirator use begins

– Periodically, within twelve months of the previous training

– Additionally, when the following occur:

■ The employee has not retained knowledge or skills

OR

■ Changes in the worksite, or type of respirator make previous training incomplete or obsolete.

Note:
- You may accept an employee's previous training, such as training provided by another employer, to satisfy the initial training requirement if:
  - You can demonstrate the employee received training within the past twelve months

  AND
  - The employee can demonstrate the knowledge and skills to use required respirators effectively.
- If you accept an employee's previous training to satisfy the initial training requirement, you are still responsible for providing periodic, and additional training when needed. Periodic training would need to be provided within twelve months of the employee's previous training.

You must:

• Make sure employees can demonstrate the following knowledge and skills as required by their duties:

– Why the respirator is necessary. Include, for example, information identifying respiratory hazards such as hazardous chemicals, the extent of the employee's exposure, and potential health effects and symptoms

– The respirator's capabilities and limitations. Include, for example, how the respirator provides protection and why air-purifying respirators cannot be used in oxygen-deficient conditions

– How improper fit, use, or maintenance can compromise the respirator's effectiveness and reliability

– How to properly inspect, put on, seal check, use, and remove the respirator

– How to clean, disinfect, repair, and store the respirator, or how to get this done by someone else

– How to use the respirator effectively in emergency situations; including what to do when a respirator fails and where emergency respirators are stored

– Medical signs and symptoms that may limit or prevent the effective use of respirators such as shortness of breath or dizziness

– The employer's general obligations under this chapter. For example, developing a written program, selecting appropriate respirators, and providing medical evaluations.

[Statutory Authority: RCW 49.17.010, 49.17.040, 49.17.050, and 49.17.060. 03-20-114, § 296-842-16005, filed 10/1/03, effective 1/1/04.]

WAC 296-842-170 Maintenance.

Your responsibility:

To make sure respirators are maintained so they will function properly and not create health hazards such as skin irritation.

You must:

Maintain respirators in a clean and reliable condition

WAC 296-842-17005

Store respirators properly

WAC 296-842-17010

Inspect and repair respirators

WAC 296-842-17015

IMPORTANT:

This section applies to employees who voluntarily use respirators only when maintenance is necessary to prevent the respirator from creating a hazard. See WAC 296-842-110 for voluntary use requirements.

[Statutory Authority: RCW 49.17.010, 49.17.040, 49.17.050, and 49.17.060. 03-20-114, § 296-842-170, filed 10/1/03, effective 1/1/04.]

WAC 296-842-17005 Maintain respirators in a clean and reliable condition.

You must:

• Make sure respirators are kept, at no cost to the employee, clean, sanitary and in good working order. Do at least the following:

– Clean and disinfect respirators as often as specified in Table 8 of this section.

Note:
- Use required cleaning and disinfecting procedures in WAC 296-842-22015, **or** the manufacturer's procedures that:
  - Result in a clean and sanitary respirator
  - Do not damage the respirator
  - Do not harm the user
- Automated cleaning and disinfecting are permitted
- Cleaning and disinfecting may be done by a central facility as long as you make sure respirators provided are clean, sanitary, and function properly.

You must:

– Make sure respirators are assembled properly after cleaning or disinfecting.

Use Table 8 to determine how often to clean and disinfect respirators.

Table 8
Required Frequencies for Cleaning and Disinfecting Respirators

If, the respirator will be . . .	Then, clean and disinfect the respirator . . .
• **Used exclusively** by one employee	• As often as needed to: – Keep it clean and functional **AND** – To prevent health hazards such as skin irritation
• Shared for nonemergency use **OR** • Used for fit-testing or training	• **Before** it is worn by another employee
• Shared for emergency use	• **After** each use so the respirator is immediately ready for use at all times

[Statutory Authority: RCW 49.17.010, 49.17.040, 49.17.050, and 49.17.060. 03-20-114, § 296-842-17005, filed 10/1/03, effective 1/1/04.]

WAC 296-842-17010 Store respirators properly.

You must:

• Store respirators to protect them from ALL of the following:

– Deformation of the facepiece or exhalation valve

– Sunlight or extreme temperatures or other conditions

– Contamination such as dust or damaging chemicals

– Excessive moisture.

Note: Use coffee cans, sealable plastic bags, or other suitable means of protection.

You must:

• Follow these additional requirements for emergency respirators:

– Keep respirators accessible to the work area

– Store respirators in compartments or with covers clearly marked as containing emergency respirators

– Follow additional storage instructions from the respirator manufacturer

– Store an adequate number of emergency respirators in each area where they may be needed.

Note: Emergency respirators include mouthpiece respirators and other respirators that are limited to escape-only use by their NIOSH certification.

[Statutory Authority: RCW 49.17.010, 49.17.040, 49.17.050, and 49.17.060. 03-20-114, § 296-842-17010, filed 10/1/03, effective 1/1/04.]

WAC 296-842-17015 Inspect and repair respirators.

You must:

• Conduct respirator inspections as often as specified in Table 9.

• Make sure respirator inspections cover **all** of the following:

– Respirator function

– Tightness of connections

– The condition of the facepiece, head straps, valves, connecting tubes, and cartridge, canisters or filters

– Pliability and deterioration of elastomeric parts

– Maintenance of air or oxygen cylinders

– Making sure SCBA air cylinders are at ninety percent of the manufacturer's recommended pressure level

– Proper functioning of SCBA regulators when air-flow is activated

– Proper functioning of SCBA low-pressure warning devices when activated

• Certify inspections for emergency respirators by documenting the following:

– Inspection date

– Serial number of each respirator or other identifying information

– Inspector's name or signature

– Inspection findings

– Required action, if problems are found.

Note:
• When documenting inspections you may either:
– Provide the information on a tag or label and attach it to the respirator compartment
OR
– Include the information in an inspection report stored in paper or electronic files accessible to employees.

You must:

• Repair or replace any respirator that is not functioning properly **before** the employee returns to a situation where respirators are required.

– If respirators fail inspection or are not functioning properly during use due to problems such as leakage, vapor or gas breakthrough, or increased breathing resistance, **ALL** of the following apply:

■ Do **NOT** permit such respirators to be used until properly repaired or adjusted

■ Use only NIOSH-certified parts

■ Make sure repairs and adjustments are made by appropriately trained individuals

– Use the manufacturer or a technician trained by the manufacturer to repair or adjust reducing and admission valves, regulators, and warning devices on SCBAs or air-line respirators.

■ Follow the manufacturer's recommendations and specifications for the type and extent of repairs.

Use Table 9 to determine how often to inspect respirators.

Table 9
Required Frequencies for Respirator Inspections

If the respirator is . . .	Then inspect . . .
A SCBA in any use	• Before **each** use **AND** • During cleaning **OR** • Monthly if **NOT** used
Used for nonemergencies, including day-to-day or infrequent use	• Inspect before each use **AND** • During cleaning
Used only for emergencies	• Check for proper function before **and** after **each** use **AND**

If the respirator is . . .	Then inspect . . .
	• Inspect at least monthly as instructed by the manufacturer
Used for escape-only purposes	• Before carrying into a work place for use

[Statutory Authority: RCW 49.17.010, 49.17.040, 49.17.050, and 49.17.060. 03-20-114, § 296-842-17015, filed 10/1/03, effective 1/1/04.]

WAC 296-842-180 Safe use and removal of respirators.

Your responsibility:

To make sure respirator use and removal is safe.

Exemption: These sections do **NOT** apply to employees who voluntarily use any type of respirator. See WAC 296-842-110 for voluntary use requirements.

You must:

Prevent sealing problems with tight-fitting respirators

WAC 296-842-18005

Make sure employees leave the use area before removing respirators

WAC 296-842-18010.

[Statutory Authority: RCW 49.17.010, 49.17.040, 49.17.050, and 49.17.060. 03-20-114, § 296-842-180, filed 10/1/03, effective 1/1/04.]

WAC 296-842-18005 Prevent sealing problems with tight-fitting respirators.

You must:

• Make sure employees use the procedure in WAC 296-842-22020 to perform a user seal check each time they put on their tight-fitting respirator.

• Make sure you do NOT permit respirator use if employees have a characteristic that interferes with the respirator facepiece seal or valve function. For example, stubble, moustaches, sideburns, bangs, hairlines, or scars between the face and the sealing surface of the respirator will affect the seal.

• Make sure corrective glasses or personal protective equipment (PPE) do **NOT** interfere with the facepiece seal. Examples of PPE include safety glasses, goggles, faceshields, clothing, and hard hats.

[Statutory Authority: RCW 49.17.010, 49.17.040, 49.17.050, and 49.17.060. 03-20-114, § 296-842-18005, filed 10/1/03, effective 1/1/04.]

WAC 296-842-18010 Make sure employees leave the use area before removing respirators.

You must:

• Make sure employees leave the use area for **any** of these reasons:

– To replace air-purifying filters, cartridges, or canisters

– When they smell or taste (detect) vapor or gas leakage from, for example, cartridges, canister, or the facepiece seal

– When they detect changes in breathing resistance

– To readjust their respirators

– To wash their faces and respirators as necessary to prevent skin or eye irritation

– If they become ill

– If they experience sensations of dizziness, nausea, weakness, breathing difficulty, coughing, sneezing, vomiting, fever, or chills.

[Statutory Authority: RCW 49.17.010, 49.17.040, 49.17.050, and 49.17.060. 03-20-114, § 296-842-18010, filed 10/1/03, effective 1/1/04.]

WAC 296-842-190 Standby requirements for immediately dangerous to life or health (IDLH) conditions.

Your responsibility:

To provide adequate assistance to employees using respirators in conditions immediately dangerous to life or health (IDLH).

[Statutory Authority: RCW 49.17.010, 49.17.040, 49.17.050, and 49.17.060. 03-20-114, § 296-842-190, filed 10/1/03, effective 1/1/04.]

WAC 296-842-19005 Provide standby assistance in immediately dangerous to life or health (IDLH) conditions.

IMPORTANT:

WISHA currently uses the IDLH values in the 1990 NIOSH *Pocket Guide to Chemical Hazards* to determine the existence of IDLH conditions. You may use more recent editions of this guide. Visit www.cdc.gov/niosh for more information.

You must:

• Provide at least two standby employees outside the IDLH area.

Note: You need only one standby employee **if** the IDLH condition is well characterized, will remain stable **AND** you can show one employee can adequately do **ALL** of the following:
• Monitor employees in the IDLH area
• Implement communication
• Initiate rescue duties.

• Train and equip standby employees to provide effective emergency rescue. Equip them with:

– A pressure-demand SCBA or a pressure-demand airline respirator with an auxiliary SCBA, for each standby employee

– Appropriate retrieval equipment, when it would help with the effective rescue of the entrant, or an equivalent means of rescue

• Make sure standby employees maintain visual, voice, or signal line communication with employees in the IDLH area

• Make sure that in the event of an emergency:

– Standby employees notify you or your designee before they enter the IDLH area to provide emergency rescue

– You provide necessary assistance when notified.

[Statutory Authority: RCW 49.17.010, 49.17.040, 49.17.050, and 49.17.060. 03-20-114, § 296-842-19005, filed 10/1/03, effective 1/1/04.]

WAC 296-842-200 Air quality for self-contained breathing apparatus (SCBA) and air-line respirators.

Your responsibility:

To provide employees who use SCBAs or air-line respirators with an acceptable air supply.

You must:

Make sure breathing air and oxygen meet established specifications

WAC 296-842-20005

Prevent conditions that could create a hazardous breathing air supply

WAC 296-842-20010

Make sure compressors do not create a hazardous breathing air supply

WAC 296-842-20015.

[Statutory Authority: RCW 49.17.010, 49.17.040, 49.17.050, and 49.17.060. 03-20-114, § 296-842-200, filed 10/1/03, effective 1/1/04.]

WAC 296-842-20005 Make sure breathing air and oxygen meet established specifications.

You must:

• Make sure that all SCBAs and air-line respirators are provided with safe breathing air and oxygen according to the following:

– Compressed breathing air must meet the following specifications for Grade D air:

■ Oxygen (volume/volume) within 19.5-23.5%

■ Hydrocarbon (condensed): NO MORE than five milligrams per cubic meter of air

■ Carbon **monoxide** (CO): NO MORE than ten parts per million (ppm)

■ Carbon **dioxide** (CO2): NO MORE than 1,000 ppm

■ No noticeable odor

Reference: See the American National Standards Institute - Compressed Gas Association Commodity Specification for Air (G-7.1.1989) for more information. Contact your local library to access a copy.

– Make sure the moisture content of the air supplied meets the following:

■ Air supplied to respirators from cylinders must **NOT** exceed a dew point of -50°F (or -45.6°C) at 1 atmospheric pressure.

■ Compressor supplied air must **NOT** exceed a dew point of 10°F (or 5.56°C) **BELOW** the use temperature at 1 atmospheric pressure.

– Cylinders obtained from a supplier of breathing air must have a certificate of analysis that verifies each cylinder's contents meet Grade D and dew point standards.

– Compressed and liquid oxygen must meet the United States Pharmacopoeia requirements for medical or breathing oxygen.

[Statutory Authority: RCW 49.17.010, 49.17.040, 49.17.050, and 49.17.060. 03-20-114, § 296-842-20005, filed 10/1/03, effective 1/1/04.]

WAC 296-842-20010 Prevent conditions that could create a hazardous breathing air supply.

You must:

• Use SCBA and air-line respirators safely:

– Do **NOT** supply compressed oxygen to SCBAs or air-line respirators that previously used compressed air.

Note: Compressed air leaves residues containing hydrocarbons such as oil or grease. Fire or explosion can occur if compressed oxygen makes contact with these residues.

You must:

– Use breathing air couplings on air-line respirators that are **NOT** compatible with couplings for nonrespirable air or other gas systems, for example, utility air used for manufacturing purposes.

– Do **NOT** allow asphyxiating substances to enter breathing air lines; for example, do not flush nitrogen through worksite air lines also used for breathing air.

– Use equipment specifically designed for oxygen service or distribution **IF** oxygen concentrations greater than 23.5% are used.

Note: Respiratory equipment NOT designed for oxygen service or distribution can create fire or explosion hazards in oxygen concentrations higher than 23.5%.

You must:

– Make sure cylinders used to supply breathing air for SCBAs or air-line respirators are tested and maintained as described in the federal Department of Transportation's (DOT) Shipping Container Specification Regulations, Title 49 CFR Parts 173 and 178.

Note:
- Use only cylinders marked (with serial number, cylinder pressure, DOT exemption number, and test dates) according to these DOT regulations
- To find any Code of Federal Regulations (CFR) visit: www.access.gpo.gov.

[Statutory Authority: RCW 49.17.010, 49.17.040, 49.17.050, and 49.17.060. 03-20-114, § 296-842-20010, filed 10/1/03, effective 1/1/04.]

WAC 296-842-20015 Make sure compressors do not create a hazardous breathing air supply.

IMPORTANT:

• Ambient-air movers (or pumps) used to supply air to respirators must be used according to the manufacturer's instructions.

• Respirators used with ambient-air movers must be approved by NIOSH to operate within the pressure ranges of the air mover.

You must:

(1) Locate or modify compressor intakes so they will not pick up contaminated air OR exhaust gases such as carbon monoxide from:

• Fuel-powered vehicles

OR

• The internal combustion motor of the compressor

OR

• Other contaminant sources in the area, for example, a ventilation system discharge.

Note:
- You may need to reposition or extend the compressor's intake or engine exhaust pipe or outlet, especially if they are located near each other.
- Be aware that exhaust gases may not adequately disperse when the compressor is operated in:

– An enclosed space such as a small room, a corner, or near a wall

OR

– In turbulent wind conditions.

You must:

(2) Equip compressors with suitable air-purifying filters, water traps, and sorbents (such as charcoal beds) and maintain them as follows:

• Periodically change or clean them according to the manufacturer or supplier's instructions

• Keep a tag at the compressor with the following information:

– When the sorbent and filters were last replaced or cleaned

– The date of the most recent changes or cleaning

– The signature of the person authorized by the employer to perform changes or cleaning.

Note: To be sure you are providing the recommended operating pressure for respirators, you may need to install a delivery pressure gauge at the point where the manifold where the respirator hose is attached.

You must:

(3) Make sure the carbon monoxide (CO) level in breathing air from compressors does **NOT** exceed ten parts per million (ppm).

Note: If you do not have a reliable CO-free area available for locating your compressor intake, consider these examples of methods to prevent CO contamination of the air supply:
- Use of continuous and effective carbon monoxide alarms and filters
- Conduct frequent monitoring of air quality

- Use a CO converter (converts CO to carbon dioxide).

You must:

• Maintain CO levels in oil lubricated compressors by using at least one of the following:

– An effective CO alarm

– An effective high temperature alarm **AND** testing the air supply often enough to see if CO levels exceed ten ppm.

Note:
- How often to test depends on a number of considerations, for example:
  - Compressor age
  - Maintenance history of the compressor
  - Stability of CO readings
- If the CO or high temperature alarm cannot be heard by the employee, a flashing light or other effective alternative to an audio alarm needs to be used
- Safeguards, such as alarms, are necessary to prevent CO contamination resulting from compressor overheating
- Any type of oil-lubricated compressor, such as screw or piston types, may produce dangerous levels of CO if overheating occurs
  - Old compressors are known to leak oil due to worn parts, increasing the possibility for overheating. Newer compressors may also overheat if maintenance practices are poor. For example, poor maintenance practices may lead to disconnected or incorrectly set alarms, inoperative shut-offs, or an impaired cooling system
- You need to instruct employees to move to a safe area when the alarm sounds AND to stop using respirators.

[Statutory Authority: RCW 49.17.010, 49.17.040, 49.17.050, and 49.17.060. 03-20-114, § 296-842-20015, filed 10/1/03, effective 1/1/04.]

WAC 296-842-210 Labeling of air-purifying respirator filters, cartridges, and canisters.

Your responsibility:

To make sure employees, their supervisors, and program administrators can easily check for the correct air-purifying filters, cartridges, and canisters on respirators.

Exemption: This section does **NOT** apply to filtering-facepiece respirators when used voluntarily. See WAC 296-842-110 for voluntary use requirements.

[Statutory Authority: RCW 49.17.010, 49.17.040, 49.17.050, and 49.17.060. 03-20-114, § 296-842-210, filed 10/1/03, effective 1/1/04.]

WAC 296-842-21005 Keep labels readable on respirator filters, cartridges, and canisters during use.

You must:

• Make sure the NIOSH certification labeling and color-coding on air-purifying respirator filters, cartridges, and canisters remains readable and intact during use.

Link: Color-coding specifications for manufacturers can be found in Title 42 CFR, Part 84. Visit www.cdc.gov/niosh.

[Statutory Authority: RCW 49.17.010, 49.17.040, 49.17.050, and 49.17.060. 03-20-114, § 296-842-21005, filed 10/1/03, effective 1/1/04.]

WAC 296-842-220 Required procedures for respiratory protection program.

Your responsibility:

To use the procedures and questionnaire provided in this section when implementing your respiratory protection program.

You must:

Use this medical questionnaire for medical evaluations

WAC 296-842-22005

Follow these fit-testing procedures for tight-fitting respirators

WAC 296-842-22010

Follow procedures established for cleaning and disinfecting respirators

WAC 296-842-22015

Follow procedures established for seal checking respirators

WAC 296-842-22020.

[Statutory Authority: RCW 49.17.010, 49.17.040, 49.17.050, and 49.17.060. 03-20-114, § 296-842-220, filed 10/1/03, effective 1/1/04.]

WAC 296-842-22005 Use this medical questionnaire for medical evaluations.

You must:

• Use the medical questionnaire in Table 10 when conducting medical evaluations.

Note:
- You may use a physical exam instead of this questionnaire if the exam covers the same information as the questionnaire.
- You may use on-line questionnaires if the questions are the same and the requirements in WAC 296-842-140 of this chapter are met.
- You may choose to send the questionnaire to the LCHP ahead of time, giving time to review it and add any necessary questions.
- The LHCP determines what questions to add to the questionnaire, if any; however, questions in Parts 1-3 may not be deleted or substantially altered.

Table 10

WISHA Medical Evaluation Questionnaire
Employer instructions:
• You may use on-line questionnaires if the requirements in WAC 296-842-14005 are met. • You must tell your employee how to deliver or send the completed questionnaire to the health care provider you have selected. • You must **NOT** review employees' questionnaires.
Health care provider's instructions:
• Review the information in this questionnaire and any additional information provided to you by the employer. • You may add questions to this questionnaire at your discretion; HOWEVER, questions in Parts 1-3 may not be deleted or substantially altered. • Follow-up evaluation is required for any positive response to questions 1-8 in Part 2, or questions 1-6 in Part 3. This might include: Phone consultations to evaluate positive responses, medical tests, and diagnostic procedures. • When your evaluation is complete, send a copy of your written recommendation to the employer AND employee.
Employee information and instructions:
• Your employer must allow you to answer this questionnaire during normal working hours, or at a time and place that is convenient to you. • Your employer or supervisor must not look at or review your answers at any time.

Part 1 - Employee Background Information
ALL employees must complete this part
Please print

1. Today's date: _____
2. Your name: _____
3. Your age (to nearest year): _____
4. Sex (circle one): Male / Female
5. Your height: _____ft. ____in.
6. Your weight: _____lbs.
7. Your job title: _____
8. A phone number where you can be reached by the health care professional who reviews this questionnaire (include Area Code): _____
9. The best time to call you at this number: _____
10. Has your employer told you how to contact the health care professional who will review this questionnaire? Yes / No
11. Check the type of respirator(s) you will be using:
a. _____ N, R, or P filtering-facepiece respirator (for example, a dust mask, OR an N95 filtering-facepiece respirator).
b. Check all that apply.
❏ Half mask ❏ Full facepiece mask ❏ Helmet hood ❏ Escape
❏ Nonpowered cartridge or canister ❏ Powered air-purifying cartridge respirator (PAPR)
❏ Supplied-air or Air-line
Self contained breathing apparatus (SCBA): ❏ Demand or ❏ Pressure demand
Other: _____
12. Have you previously worn a respirator? Yes / No
If "yes," describe what type(s): _____

Part 2 - General Health Information
ALL employees must complete this part
Please circle "Yes" or "No"

1. Do you *currently* smoke tobacco, or have you smoked tobacco in the last month? Yes / No
2. Have you *ever had* any of the following conditions?
a. Seizures (fits): Yes / No
b. Diabetes (sugar disease): Yes / No
c. Allergic reactions that interfere with your breathing: Yes / No
d. Claustrophobia (fear of closed-in places): Yes / No
e. Trouble smelling odors: Yes / No
3. Have you *ever had* any of the following pulmonary or lung problems?
a. Asbestosis: Yes / No
b. Asthma: Yes / No
c. Chronic bronchitis: Yes / No
d. Emphysema: Yes / No
e. Pneumonia: Yes / No
f. Tuberculosis: Yes / No
g. Silicosis: Yes / No
h. Pneumothorax (collapsed lung): Yes / No
i. Lung cancer: Yes / No
j. Broken ribs: Yes / No
k. Any chest injuries or surgeries: Yes / No
l. Any other lung problem that you have been told about: Yes / No
4. Do you *currently* have any of the following symptoms of pulmonary or lung illness?
a. Shortness of breath: Yes / No
b. Shortness of breath when walking fast on level ground or walking up a slight hill or incline: Yes / No
c. Shortness of breath when walking with other people at an ordinary pace on level ground: Yes / No
d. Have to stop for breath when walking at your own pace on level ground: Yes / No
e. Shortness of breath when washing or dressing yourself: Yes / No
f. Shortness of breath that interferes with your job: Yes / No
g. Coughing that produces phlegm (thick sputum): Yes / No
h. Coughing that wakes you early in the morning: Yes / No
i. Coughing that occurs mostly when you are lying down: Yes / No
j. Coughing up blood in the last month: Yes / No
k. Wheezing: Yes / No
l. Wheezing that interferes with your job: Yes / No

m. Chest pain when you breathe deeply:	Yes	/	No
n. Any other symptoms that you think may be related to lung problems:	Yes	/	No
5. Have you *ever had* any of the following cardiovascular or heart problems?	Yes	/	No
a. Heart attack:	Yes	/	No
b. Stroke:	Yes	/	No
c. Angina:	Yes	/	No
d. Heart failure:	Yes	/	No
e. Swelling in your legs or feet (not caused by walking):	Yes	/	No
f. Heart arrhythmia (heart beating irregularly):	Yes	/	No
g. High blood pressure:	Yes	/	No
h. Any other heart problem that you have been told about:	Yes	/	No
6. Have you *ever had* any of the following cardiovascular or heart symptoms?			
a. Frequent pain or tightness in your chest:	Yes	/	No
b. Pain or tightness in your chest during physical activity:	Yes	/	No
c. Pain or tightness in your chest that interferes with your job:	Yes	/	No
d. In the past 2 years, have you noticed your heart skipping or missing a beat:	Yes	/	No
e. Heartburn or indigestion that is not related to eating:	Yes	/	No
f. Any other symptoms that you think may be related to heart or circulation problems:	Yes	/	No
7. Do you *currently* take medication for any of the following problems?	Yes	/	No
a. Breathing or lung problems:	Yes	/	No
b. Heart trouble:	Yes	/	No
c. Blood pressure:	Yes	/	No
d. Seizures (fits):	Yes	/	No
8. If you have used a respirator, have you *ever had* any of the following problems? (If you have never used a respirator, check the following space and go to question 9:) _____			
a. Eye irritation:	Yes	/	No
b. Skin allergies or rashes:	Yes	/	No
c. Anxiety:	Yes	/	No
d. General weakness or fatigue:	Yes	/	No
e. Any other problem that interferes with your use of a respirator?	Yes	/	No
9. Would you like to talk to the health care professional who will review this questionnaire about your answers?	Yes	/	No
Part 3 - Additional Questions for Users of Full-Facepiece Respirators or SCBAs			
Please circle "Yes" or "No"			
1. Have you *ever lost* vision in either eye (temporarily or permanently)?	Yes	/	No
2. Do you *currently* have any of these vision problems?			
a. Need to wear contact lenses:	Yes	/	No
b. Need to wear glasses:	Yes	/	No
c. Color blindness:	Yes	/	No
d. Any other eye or vision problem:	Yes	/	No
3. Have you *ever had* an injury to your ears, including a broken ear drum?	Yes	/	No
4. Do you *currently* have any of these hearing problems?			
a. Difficulty hearing:	Yes	/	No
b. Need to wear a hearing aid:	Yes	/	No
c. Any other hearing or ear problem:	Yes	/	No
5. Have you *ever had* a back injury?	Yes	/	No
6. Do you *currently* have any of the following musculoskeletal problems?			
a. Weakness in any of your arms, hands, legs, or feet:	Yes	/	No
b. Back pain:	Yes	/	No
c. Difficulty fully moving your arms and legs:	Yes	/	No
d. Pain or stiffness when you lean forward or backward at the waist:	Yes	/	No
e. Difficulty fully moving your head up or down:	Yes	/	No
f. Difficulty fully moving your head side to side:	Yes	/	No
g. Difficulty bending at your knees:	Yes	/	No
h. Difficulty squatting to the ground:	Yes	/	No
i. Climbing a flight of stairs or a ladder carrying more than 25 lbs:	Yes	/	No
j. Any other muscle or skeletal problem that interferes with using a respirator:	Yes	/	No
Part 4 - Discretionary Questions			
Complete questions in this part ONLY IF your employer's health care provider says they are necessary			
1. In your present job, are you working at high altitudes (over 5,000 feet) or in a place that has lower than normal amounts of oxygen?	Yes	/	No

If "yes," do you have feelings of dizziness, shortness of breath, pounding in your chest, or other symptoms when you are working under these conditions: Yes / No

2. Have you ever been exposed (at work or home) to hazardous solvents, hazardous airborne chemicals (such as gases, fumes, or dust), OR have you come into skin contact with hazardous chemicals? Yes / No

If "yes," name the chemicals, if you know them: _____

3. Have you ever worked with any of the materials, or under any of the conditions, listed below:

a. Asbestos? Yes / No

b. Silica (for example, in sandblasting)? Yes / No

c. Tungsten/cobalt (for example, grinding or welding this material)? Yes / No

d. Beryllium? Yes / No

e. Aluminum? Yes / No

f. Coal (for example, mining)? Yes / No

g. Iron? Yes / No

h. Tin? Yes / No

i. Dusty environments? Yes / No

j. Any other hazardous exposures? Yes / No

If "yes," describe these exposures: _____

4. List any second jobs or side businesses you have: _____

5. List your previous occupations: _____

6. List your current and previous hobbies: _____

7. Have you been in the military services? Yes / No

If "yes," were you exposed to biological or chemical agents (either in training or combat)? Yes / No

8. Have you ever worked on a HAZMAT team? Yes / No

9. Other than medications for breathing and lung problems, heart trouble, blood pressure, and seizures mentioned earlier in this questionnaire, are you taking any other medications for any reason (including over-the-counter medications)? Yes / No

If "yes," name the medications if you know them: _____

10. Will you be using any of the following items with your respirator(s)?

a. HEPA filters: Yes / No

b. Canisters (for example, gas masks): Yes / No

c. Cartridges: Yes / No

11. How often are you expected to use the respirator(s)?

a. Escape-only (no rescue): Yes / No

b. Emergency rescue only: Yes / No

c. Less than 5 hours *per week*: Yes / No

d. Less than 2 hours *per day*: Yes / No

e. 2 to 4 hours per day: Yes / No

f. Over 4 hours per day:

12. During the period you are using the respirator(s), is your work effort:

a. *Light* (less than 200 kcal per hour): Yes / No

If "yes," how long does this period last during the average shift: _____hrs. _____mins.

Examples of a light work effort are sitting while writing, typing, drafting, or performing light assembly work; or standing while operating a drill press (1-3 lbs.) or controlling machines.

b. *Moderate* (200 to 350 kcal per hour): Yes / No

If "yes," how long does this period last during the average shift: _____hrs. _____mins.

Examples of moderate work effort are sitting while nailing or filing; driving a truck or bus in urban traffic; standing while drilling, nailing, performing assembly work, or transferring a moderate load (about 35 lbs.) at trunk level; walking on a level surface about 2 mph or down a 5-degree grade about 3 mph; or pushing a wheelbarrow with a heavy load (about 100 lbs.) on a level surface.

c. *Heavy* (above 350 kcal per hour): Yes / No

If "yes," how long does this period last during the average shift: _____hrs. _____mins.

Examples of heavy work are lifting a heavy load (about 50 lbs.) from the floor to your waist or shoulder; working on a loading dock; shoveling; standing while bricklaying or chipping castings; walking up an 8-degree grade about 2 mph; climbing stairs with a heavy load (about 50 lbs.).

13. Will you be wearing protective clothing and/or equipment (other than the respirator) when you are using your respirator? Yes / No

If "yes," describe this protective clothing and/or equipment: _____

14. Will you be working under hot conditions (temperature exceeding 77°F): Yes / No

15. Will you be working under humid conditions: Yes / No
16. Describe the work you will be doing while using your respirator(s): _____
17. Describe any special or hazardous conditions you might encounter when you are using your respirator(s) (for example, confined spaces, life-threatening gases): _____
18. Provide the following information, if you know it, for each toxic substance that you will be exposed to when you are using your respirator(s):
Name of the first toxic substance: _____
Estimated maximum exposure level per shift: _____
Duration of exposure per shift: _____
Name of the second toxic substance: _____
Estimated maximum exposure level per shift: _____
Duration of exposure per shift: _____
Name of the third toxic substance: _____
Estimated maximum exposure level per shift: _____
Duration of exposure per shift: _____
The name of any other toxic substances that you will be exposed to while using your respirator: _____
19. Describe any special responsibilities you will have while using your respirator(s) that may affect the safety and well being of others (for example, rescue, security). _____

[Statutory Authority: RCW 49.17.010, 49.17.040, 49.17.050, and 49.17.060. 03-20-114, § 296-842-22005, filed 10/1/03, effective 1/1/04.]

WAC 296-842-22010 Follow these fit-testing procedures for tight-fitting respirators.

IMPORTANT:

• This section contains procedural requirements that apply during actual fit testing.

• See WAC 296-842-150 of this chapter for fit-testing requirements that apply to your overall program.

Exemptions: This section does **NOT** apply to employees who:
- Voluntarily use respirators

OR
- Are required to use mouthpiece respirators.

You must:

• Conduct fit testing according to all of the following:

– Follow the procedure in Table 11 to choose a respirator for fit testing:

■ Prior to conducting fit tests

AND

■ Any time your employee must select a different respirator such as when a previously selected respirator fails a test

– Select and follow at least one of the following fit test procedures:

■ Qualitative fit-test procedures:

❖ Isoamyl acetate vapor (IAA, banana oil) in Table 12

❖ Saccharine aerosol in Table 13

❖ Bitrex™ aerosol in Table 14

❖ Irritant smoke in Table 15

■ Quantitative fit-test procedures:

❖ Ambient aerosol condensation nuclei counter such as the Portacount™, in Table 16

❖ Controlled negative pressure (CNP) such as the Fit-Tester 3000™, in Table 17

❖ Generated aerosol in Table 18

– Make sure employees perform the appropriate fit-test exercises listed in Table 19.

– Clean and maintain equipment according to the manufacturer's instructions.

– Make sure during fit testing employees wear any safety equipment that could:

■ Interfere with respirator fit

AND

■ Be worn in the workplace. For example, chemical splash goggles.

– Check, prior to fit testing, for conditions that may interfere with the respirator seal or valve functions. If you find such conditions, do **NOT** conduct fit testing for that individual.

Note: Examples of conditions that may interfere with the respirator seal or valve functions include:
- Moustache, stubble, sideburns, bangs, hairline, and other types of facial hair in areas where the respirator facepiece seals or that interfere with valve function
- Temple bars of corrective eyewear or headgear that extend through the face seal area.

Table 11

Procedure for Choosing a Respirator for Fit Testing
1. **Inform** the employee: • To choose the most comfortable respirator that provides an adequate fit • That each respirator sample represents a different size and, if more than one model is supplied, a different shape • That if fitted and used properly, the respirator chosen will provide adequate protection 2. **Provide** a mirror and show the employee how to: • Put on the respirator • Position the respirator on the face • Set strap tension. **Note:** This instruction does NOT take the place of the employee's formal training since it is only a review. 3. **Review** with the employee how to check for a comfortable fit around the nose, cheeks and other areas on the face. • Tell the employee the respirator should be comfortable while talking or wearing eye protection. 4. **Have the employee** hold each facepiece against the face, taking enough time to compare the fit of each. The employee can then either: • Reject any facepiece that clearly does not feel comfortable or fit adequately **OR**

Procedure for Choosing a Respirator for Fit Testing

• Choose which facepiece is most acceptable and which are less acceptable, if any.

Note:

• Supply as many respirator models and sizes as needed to make sure the employee finds a respirator that is acceptable and fits correctly

• To save time later, during this step note the more acceptable facepieces in case the one chosen fails the fit test or proves unacceptable later.

5. **Have the employee wear** the most acceptable respirator for **AT LEAST** 5 minutes to evaluate comfort and fit. Do **ALL** of the following during this time:

• Ask the employee to observe and comment about the comfort and fit:

– Around the nose, cheeks, and other areas on the face

– When talking or wearing eye protection

• Have the employee put on the respirator and adjust the straps until they show proficiency

• Evaluate the respirator's general fit by checking:

– Proper chin placement

– Properly tightened straps (do **NOT** over tighten)

– Acceptable fit across the nose bridge

– Respirator size; it must span the distance from nose to chin

– To see if the respirator stays in position

• Have the employee complete a successful seal check as specified in WAC 296-842-22025 of this chapter

– Prior to the seal check they must settle the respirator on their face by taking a few slow deep breaths **WHILE SLOWLY:**

■ Moving their head from side-to-side

AND

■ Up and down.

6. **If the employee finds the respirator unacceptable,** allow the employee to select another one and return to Step 5. Otherwise, proceed to Step 7.

7. **Before starting the fit test,** you must:

• Describe the fit test including screening procedures, employee responsibilities, and test exercises

AND

• Make sure the employee wears the respirator **AT LEAST** five minutes.

Table 12

Isoamyl Acetate (Banana Oil) Vapor Test Procedure

Important:

• This is a qualitative fit-test (QLFT) procedure

• The success of this test depends on preserving the employee's odor sensitivity to isoamyl acetate (IAA) vapor

– Vapor accumulations in ambient air can decrease odor sensitivity. To prevent this:

■ Prepare **ALL** solutions in a location separate from screening and test areas

■ Conduct screening and tests in separate well-ventilated rooms. For example, use an exhaust fan or laboratory hood to prevent IAA vapor from accumulating in the room air

Isoamyl Acetate (Banana Oil) Vapor Test Procedure

– Always use odor-free water, for example, distilled or spring water that is 25°C (77°F).

• Isoamyl acetate is also known as isopentyl acetate.

Screening Preparations

Important:

Odor threshold screening determines if the employee can detect weak concentrations of IAA vapor.

1. Choose an appropriate location to conduct screening.

• Conduct screening and tests in separate well-ventilated rooms.

2. Prepare a stock solution **AT LEAST** weekly as follows:

• Add one milliliter (ml) of pure IAA to 800 ml of odor-free water in a one-liter glass jar with a metal lid using a measuring dropper or pipette

• Seal the jar with the lid and shake it for 30 seconds

• Clean the dropper or pipette.

3. Prepare the odor test solution daily as follows:

• Add 0.4 ml from the stock solution to 500 ml of water in a one liter glass jar with a metal lid using a clean pipette or dropper

• Seal the jar with the lid and shake it for 30 seconds

• Let this solution stand for 2-3 minutes so the IAA concentration above the liquid reaches equilibrium

• Label this jar so you know the contents but the employee cannot know its contents, for example, "1."

Note:

To maintain the integrity of the test, use labels that peel off easily **AND** periodically switch the labels.

4. Prepare a "test blank" solution as follows:

• Add 500 ml of odor-free water to a one liter glass jar with a metal lid

• Seal the jar

• Label the jar so you know the contents but the employee cannot know its contents.

5. Type or neatly print the following instructions on a card and place it on the table in front of the two test jars:

"*The purpose of this test is to find out if you can smell banana oil at a low concentration. While both jars contain water, one* ***ALSO*** *contains a small amount of banana oil.*

Make sure the lid is secure then pick up a jar and shake it for two seconds. Open the jar and sniff at the opening. Repeat this for the second jar.

Tell the individual conducting the fit test which jar contains banana oil."

Test Preparations

6. Choose an appropriate location to conduct fit testing.

• Conduct screening and tests in separate well-ventilated rooms.

7. Assemble the fit test enclosure in the room.

• Invert a clear 55-gallon drum liner over a circular 2-foot diameter frame made of plywood or other lightweight rigid material OR construct a similar enclosure using plastic sheeting

• Hang the frame with the plastic covering so the top of the enclosure is about six inches above the employee's head

• Attach a small hook inside top center of the enclosure

Isoamyl Acetate (Banana Oil) Vapor Test Procedure
• Tape a copy of the test exercises (see Table 28) to the inside of the test enclosure where the employee can read it. 8. Have organic vapor cartridges or equivalent on hand for each employee's chosen respirator. 9. Have ready a 6 x 5-inch piece of paper towel or other porous absorbent single-ply material **AND** 0.75 ml of pure IAA. Do NOT apply IAA yet. **Note:** As an alternative to using the paper towel, you may use an IAA test swab OR ampoule if it has been demonstrated to generate an equivalent test concentration.
Screening
10. Have the employee, while **NOT** wearing a respirator, follow the instructions on the card provided. • If the employee correctly identifies the jar containing IAA, proceed to conduct testing (Step 11) • If the employee is **NOT** able to correctly identify the jar containing IAA, you must **STOP** and use a different fit test protocol.
Test
11. **BEFORE** entering the fit test room, have the employee attach cartridges, put on, properly adjust, and seal check the respirator. Have the employee enter the test enclosure. 12. Wet the paper towel with 0.75 ml of **pure** IAA **AND** fold it in half. 13. Pass the paper towel to the employee inside the enclosure **AND** instruct the employee to hang it on the hook at the top of the enclosure. 14. Wait two minutes for the IAA vapor to fill the enclosure. • While waiting, explain the fit test, including the purpose of the test exercises, the importance of cooperation, and that you must be informed if a banana-like odor is detected during the test • You may also demonstrate the test exercises. 15. Have the employee perform the appropriate fit-test exercises in Table 19. • If the employee does **NOT** detect IAA while performing test exercises, the fit test has been **PASSED.** Proceed as follows: – **BEFORE** leaving the enclosure, have the employee break the respirator seal and inhale. If they **detect** IAA, the test is valid – When exiting the employee must remove the paper towel and give it to the individual conducting the fit test. This prevents IAA vapor from building up in the enclosure during subsequent tests – The individual conducting the fit test must keep used paper towels in a self-sealing plastic bag to prevent area contamination • If the employee detects IAA during any test exercise, the fit test has **FAILED. STOP** and have the employee do the following: – Quickly return to the selection room to remove the respirator. This avoids decreasing the employee's odor sensitivity – Select another respirator – Repeat screening and testing

Isoamyl Acetate (Banana Oil) Vapor Test Procedure
■ At this stage, if the employee fails the screening part of this procedure, the employee can repeat it **AFTER** waiting at least five minutes for odor sensitivity to return.

Table 13

Saccharin Aerosol Test Procedure
Screening Preparations
Important: • This is a qualitative fit-test (QLFT) procedure • Taste threshold screening determines whether the employee being tested can detect the taste of saccharin – The employee must **NOT** eat, smoke, chew gum or drink anything but plain water for at least fifteen minutes **BEFORE** the fit test. Sweet foods or drink consumed before the test may make the employee unable to detect saccharin during screening – Nebulizers must be thoroughly rinsed in water and shaken dry: ■ Each morning and afternoon **OR** ■ At least every four hours. • You may use commercially prepared solutions if they meet the requirements in this procedure. 1. Obtain a test enclosure (hood) that meets the following specifications: • Twelve inches in diameter by fourteen inches tall • A clear front portion • Enough space inside to allow free movement of the head when a respirator is worn • A 3/4 inch (or 1.9 centimeter) hole to accommodate the nebulizer nozzle. The hole must line up in front of the wearer's nose and mouth. **Note:** • An enclosure similar to the 3M hood assembly, parts #FT 14 and #FT 15 combined, meets these specifications • This enclosure can also be used for testing. 2. Obtain and assemble two clean DeVilbiss Model 40 Inhalation Medication Nebulizers OR equivalent. 3. Prepare the screening solution as follows: • Dissolve 830.0 milligrams of sodium saccharin USP in 100 ml of warm distilled water **OR** • **IF** you have already prepared the fit-test solution, you can make the screening solution by adding 1 ml of this solution to 100 ml of distilled water. 4. Add about 1 ml of the screening solution to one of the nebulizers. • Mark this nebulizer to distinguish it from the one to be used for fit testing.
Test Preparations
5. Prepare the fit-test solution as follows: • Add 83.0 grams of sodium saccharin to 100 ml of warm water. 6. Add about 1 ml of the test solution to the second nebulizer. • Mark this nebulizer to distinguish it from the one used for screening

Saccharin Aerosol Test Procedure

Screening Preparations

7. Have particulate filters ready for the employee's chosen respirator or have filtering-facepiece respirators ready.

Screening

8. Have the employee, while NOT wearing a respirator, put on the test enclosure.
9. Instruct the employee to:
   - Breath through a slightly open mouth with tongue extended during screening **AND** testing
   - Immediately report when a sweet taste is detected.
10. Insert the nebulizer into the front hole of the test enclosure **AND** administer saccharin as follows:
   - Direct the nozzle away from the employee's nose and mouth
   - Complete 10 squeezes in rapid succession
   - Each time firmly squeeze the bulb so it collapses completely, then release and allow it to fully expand.
11. Ask the employee if a sweet taste is detected.
   - If **YES,** screening is completed. Proceed to conduct testing, Step 14, **AFTER** you:
     – Ask the employee to remember the taste for reference during the fit test
     – Note the employee's taste threshold as "10" regardless of the number of squeezes actually completed
   - If **NO,** screening must continue. Proceed to Step 12.
12. Repeat with 10 more squeezes. Then follow Step 11 again; **EXCEPT** this time note the employee's taste threshold as "20" **IF** a sweet taste is reported.
   - If a sweet taste is still **NOT** detected, repeat with 10 more squeezes and follow Step 11 one last time; **EXCEPT** this time note "30" for the taste threshold IF a sweet taste is reported.
13. If **NO** sweet taste is reported after 30 squeezes, you must **STOP** and choose a different fit-test protocol for the employee.

Test

Important!
- Periodically check nebulizers to make sure they do not clog during use. A test is **NOT** valid if the nebulizer is clogged at the end of the test.

14. Have the employee attach particulate filters, put on, properly adjust, and seal check the respirator. Have the employee put on the test enclosure (hood).
15. Instruct the employee to immediately report if a sweet taste is detected.
16. Insert the nebulizer into the front hole of the test enclosure **AND** administer the same number of squeezes, either 10, 20, or 30, as noted during screening.
17. Have the employee perform the appropriate fit-test exercises as described in Table 19. During this step:
   - Replenish the aerosol in the hood **EVERY** 30 seconds using 1/2 the number of squeezes used in Step 16, either 5, 10, or 15
   - The employee must report if a sweet taste is detected:
     – If **NO** saccharin is tasted, the test has been **PASSED**
       ■ If saccharin is tasted the test has **FAILED,** have the employee select another respirator

Saccharin Aerosol Test Procedure

Screening Preparations

AND
■ Repeat screening and testing.

Table 14

Bitrex™ Aerosol Test Procedure

Important!
- This is a qualitative fit-test (QLFT) procedure
- Bitrex™ (denatonium benzoate) is routinely used as a taste aversion agent in household liquids that children should not drink and is endorsed by the American Medical Association, the National Safety Council, and the American Association of Poison Control Centers
- The employee must **NOT** eat, smoke, chew gum or drink anything but plain water for at least fifteen minutes **BEFORE** the fit test.

Screening Preparations

Important!
- Taste threshold screening determines whether the employee being tested can detect the taste of Bitrex™
- Nebulizers must be thoroughly rinsed in water and shaken dry:
  – Each morning and afternoon
  OR
  – At least every four hours.
- You may use commercially prepared solutions if they meet the requirements in this procedure.

1. Obtain a test enclosure that meets the following specifications:
   - Twelve inches in diameter by fourteen inches tall
   - A clear front portion
   - Enough space inside the front to allow free movement of the head when a respirator is worn
   - 3/4 inch (or 1.9 centimeter) hole to accommodate the nebulizer nozzle. The hole must line up in front of the wearer's nose and mouth.

   Note:
   - An enclosure similar to the 3M hood assembly, parts #FT 14 and #FT 15 combined, meets these specifications
   - This enclosure can also be used for testing.
2. Obtain and assemble two clean DeVilbiss Model 40 Inhalation Medication Nebulizers OR equivalent:
3. Prepare the screening solution as follows:
   - Make up a 5% salt solution by dissolving 5.0 grams of salt (sodium chloride) into 100 ml of distilled water
   - Dissolve 13.5 milligrams of Bitrex™ in the salt solution.
4. Add about 1 ml of the screening solution to one of the nebulizers.
   - Mark this nebulizer to distinguish it from the one to be used for fit testing.

Test Preparations

5. Prepare the fit test solution.
   - Dissolve 10.0 grams of salt (sodium chloride) into 200 ml of distilled water
   - Add 337.5 milligrams of Bitrex™ to the warmed salt solution.

Bitrex™ Aerosol Test Procedure

6. Add about 1 ml of the test solution to the second nebulizer.
   - Mark this nebulizer to distinguish it from the one used for screening.
7. Have particulate filters ready for the employee's chosen respirator or have filtering-facepiece respirators ready.

Screening

Important:
The employee must **NOT** eat, smoke, chew gum or drink anything but plain water for at least fifteen minutes **BEFORE** the screening and test

8. Have the employee, while **NOT** wearing a respirator, put on the test enclosure.
9. Instruct the employee to:
   - Breath through a slightly opened mouth with tongue extended during screening **AND** testing
   - Immediately report when a bitter taste is detected.
10. Insert the nebulizer into the front hole of the test enclosure **AND** administer Bitrex™ as follows:
   - Direct the nozzle away from the employee's nose and mouth
   - Complete 10 squeezes in rapid succession
   - Each time firmly squeeze the bulb so it collapses completely, then release and allow it to fully expand.
11. Ask the employee whether a bitter taste is detected.
   - If **YES,** screening is completed. Proceed to conduct testing, Step 14, **AFTER** you:
     – Ask the employee to remember the taste for reference during the fit test
     – Note the employee's taste threshold as "10," regardless of the number of squeezes actually completed
   - If **NO,** screening must continue. Proceed to Step 12.
12. Repeat with 10 more squeezes. Then follow Step 11 again; **EXCEPT** this time note the employee's taste threshold as "20" **IF** a bitter taste is reported.
   - If a bitter taste is still **NOT** detected repeat with 10 more squeezes and follow Step 11 one last time; **EXCEPT** this time note "30" for the taste threshold IF a bitter taste is reported.
13. If **NO** bitter taste is reported after 30 squeezes, you must **STOP** and choose a different fit-test protocol for the employee.

Test

14. Have the employee attach particulate filters, put on, properly adjust, and seal check the respirator. Have the employee put on the test enclosure.
15. Instruct the employee to:
   - Breathe through a slightly opened mouth with tongue extended during screening **AND** testing
   - Immediately report when a bitter taste is detected.
16. Insert the nebulizer into the front hole of the test enclosure **AND** administer the same number of squeezes, either 10, 20, or 30, as noted during screening.
17. Have the employee perform the appropriate fit-test exercises as described in Table 19. During this step:
   - Replenish the aerosol in the hood **EVERY** 30 seconds using 1/2 the number of squeezes used in Step 16, either 5, 10, or 15
   - The employee must report if a bitter taste is detected:
     – If **NO** Bitrex™ is tasted, the test has been **PASSED**
     – If Bitrex™ is tasted the test has FAILED.. Have the employee:
       ■ Select another respirator
       AND
       ■ Repeat all screening and testing steps.

Table 15

Irritant Smoke (Stannic Chloride) Test Procedure

Important:
- **DO NOT USE A TEST ENCLOSURE OR HOOD FOR THIS FIT TEST!**
- This is a qualitative fit-test (QLFT) procedure
- During this test an employee is exposed to irritating smoke containing hydrochloric acid produced by a stannic chloride ventilation smoke tube to detect leakage. The smoke will irritate eyes, lungs, and nasal passages
- Employee sensitivity varies, and certain employees may respond more intensely than others exposed to irritant smoke. The individual conducting the fit test must take precautions to minimize the employees' exposure to irritant smoke
- Conduct fit testing in an area with adequate ventilation to prevent exposure of the individual conducting the fit test and build-up of irritant smoke in the ambient air.

Screening AND Test Preparations

Important:
Sensitivity screening is necessary to determine whether the employee can detect a weak concentration of irritant smoke **AND** whether any gross facepiece leakage is detected.

1. Obtain only stannic chloride (ventilation) smoke tubes, **AND** an aspirator squeeze bulb **OR** use a low-flow air pump set to deliver 200 milliliters of air flow per minute.
2. Equip the employee's chosen respirator with P100 series filters if a negative pressure air-purifying respirator will be tested. If a powered air-purifying respirator (PAPR) will be tested equip the respirator with high-efficiency particulate air (HEPA) filters.

Screening

Important!
When performing sensitivity screening checks use only the **MINIMUM** amount of smoke necessary to elicit a response from the employee.

3. Advise the employee that the smoke can be irritating to eyes, lungs, and nasal passages **AND** instruct the employee to keep eyes closed while exposed.
4. Break both ends of the ventilation smoke tube **AND** fit a short piece of plastic tubing, for example, two-to-six inches of tygon tubing, over one end to prevent exposure to the sharp end of the tube. Connect the other end to an aspirator bulb or a low-flow air pump set to deliver a flow of 200 ml per minute.
5. While the employee is **NOT** wearing a respirator, have the employee smell a weak concentration of irritant smoke to become familiar with its irritating properties.
   - Carefully direct a small amount of irritant smoke toward the employee.

Irritant Smoke (Stannic Chloride) Test Procedure

Test

Test 6. Have the employee attach respirator filters, put on, adjust, and seal check the respirator without assistance. The employee must be proficient at these tasks.

7. Remind the employee to keep eyes closed during testing.

8. Direct a stream of irritant smoke toward the respirator's face seal area as follows:

- Begin at least 12 inches from the facepiece **AND** move the smoke around the whole perimeter of the mask
- Gradually make two more passes around the perimeter of the facepiece, moving to within 6 inches of the respirator
- **STOP** at any time the employee detects smoke in the facepiece. If this occurs a different respirator will need to be chosen and tested, beginning with sensitivity screening.

9. Have the employee perform appropriate fit-test exercises in Table 19 **IF** the employee has **NOT** had an involuntary response such as evidence of coughing, flinching, or other response, **OR** detected smoke in the facepiece.

- Continue to direct smoke from a distance of 6 inches around the facepiece perimeter
  - If smoke is detected at any time the test has **FAILED.** A different respirator must be chosen and tested, starting with sensitivity screening
  - If **NO** smoke is detected proceed to Step 10.

10. Have the employee remove the respirator **AND** perform another sensitivity screening check as follows:

- Continue to use the smoke tube used for fit testing
- Carefully direct a **SMALL** amount of irritant smoke toward the employee
  - The test has been **PASSED IF** the employee responds to the smoke
  - The fit test is **VOIDED IF** the employee does **NOT** respond to the smoke.

Table 16

Ambient Aerosol Condensation Nuclei Counter (Portacount™) Test Procedure

Important:

- This is a quantitative (QNFT) fit-test procedure
- This method uses a particle counting instrument that measures and compares the particle concentration both inside and outside the respirator facepiece while the employee performs a series of test exercises
- Particles in the ambient air are used as the test aerosol.

Test Preparations

1. Obtain a test instrument such as a Portacount™.

2. Have probed respirators available for each respirator model and size the employer uses, **OR** have a sampling adapter available if the employee's actual or chosen respirator will be tested.

Note:

- A probed respirator has a special fitting installed on the facepiece designed to connect with the end of the test instrument's plastic sampling tube so that air samples can be taken inside the facepiece. Probed respirators can be obtained from the respirator manufacturer, or distributor, **AND** can only be used for fit-testing purposes
- Contact TSI Inc., **OR** the respirator's manufacturer to obtain probed respirators or facepiece sampling adapters.

3. Follow the test instrument manufacturer's instructions for test preparation, including particle, zero, and system checks. Make sure the instrument's pass **OR** fail criterion is programmed to the following **MINIMUM** performance levels:

- For half-facepiece respirators, an overall minimum fit factor of 100 as a passing level
- For full-facepiece respirators, an overall minimum fit factor of 500 as a passing level

4. Have high-efficiency particulate air (HEPA) filters, **OR** other respirator filters available that are capable of preventing significant penetration by particles generated by the test instrument such as, P100 or N95 series filters.

- If you will use a sampling adapter instead of probed respirators be sure to have the correct type for the respirators chosen.

Test

5. Properly attach the sampling line to the facepiece probe or sampling adapter.

6. Have the employee attach respirator filters, put on, properly adjust, and wear the respirator five minutes **BEFORE** the fit test. During this time you and the employee must evaluate the respirator's general fit by checking:

- Proper chin placement
- Properly tightened straps (do **NOT** over tighten)
- Acceptable fit across the nose bridge
- Respirator size. It must span the distance from nose to chin
- To see if the respirator stays in position.

Note:

Wearing the respirator for five minutes permits the employee to make certain the respirator is comfortable **AND** allows for purging of ambient particles trapped inside the facepiece.

7. Have the employee perform a seal check. Make sure the sampling line is crimped to avoid leakage during the seal check. If **NO** leakage is detected, proceed to Step 8. If leakage is detected:

- Determine the cause

AND

- If leakage is due to a poorly fitting facepiece, have the employee:
  - Choose another respirator size or model

  AND
  - Start again at Step 6.

8. Start the fit test cycle.

- Follow the manufacturer's instructions for operating the test instrument
- Have the employee perform the appropriate fit-test exercises in Table 19

– The test instrument will automatically stop and calculate the overall fit factor. Use this result to determine whether or not the test is passed

■ The test has been **PASSED** if the overall fit factor is at least 100 for a half facepiece, **OR** 500 for a full facepiece

■ The test has **FAILED** if the overall fit factor is below 100 for a half facepiece or 500 for a full facepiece.

Note:
If the test has failed, have the employee select another respirator model or size following Table 11 **AND** repeat this procedure.

Table 17

Controlled Negative Pressure (CNP) Test Procedure
Important! • This is a quantitative fit-test (QNFT) procedure • This method determines respirator fit by measuring how much the facepiece leaks when it is subject to a slight negative pressure **AFTER** various premeasurement activities • Measurements occur while employees remain still **AND** hold their breath for 10 seconds • No test aerosols are used. Respirator cartridges are not needed for this test.
Test Preparations
1. Make sure the individual conducting the fit test is thoroughly trained to perform this test. 2. Obtain a CNP test instrument such as a FitTester 3000™. Make sure: • Defaults are set at: – -15mm (-0.58 inches) of water test pressure **AND** – A modeled inspiratory flow rate of 53.8 liters per minute • It has an effective audio warning device that signals when employees fail to hold their breath. **Note:** • You are not required to obtain test recording and printing equipment such as computers OR printers. Hand recording results is acceptable • To see default settings, check the instrument's "REDON protocol." 3. Obtain facepiece adapters appropriate for each test respirator. **Note:** • Adapters are either a one-piece (for SCBA facepieces), OR two-piece (for dual cartridge facepieces) device providing a manifold and breathing valve system. For positive pressure respirators, you will need to obtain an additional fitting, available from the respirator manufacturer, to convert the facepiece to negative pressure • To obtain adapters, contact the CNP instrument's distributor, Occupational Health Dynamics, **OR** the respirator manufacturer.

Controlled Negative Pressure (CNP) Test Procedure
Test
Important! After the test, you must ask the employee about the comfort of the respirator **AND** if the respirator has become unacceptable, another size or model must be chosen and tested. 4. Explain the test procedure to the employee. 5. Train the employee on how to hold a breath for at least 20 seconds. 6. Prepare the respirator for the fit test as follows: • Remove or prop open the inhalation valves. If a breathing tube is present, disconnect it • Replace cartridges, if present, with the manifold and breathing valve adapter – For positive pressure facepieces, mount the manufacturer's additional fitting followed by the manifold-breathing valve adapter • Connect the respirator to the CNP device according to the CNP instrument manufacturer's directions. 7. Have the employee put on, adjust, and seal check the respirator. 8. Turn on the instrument **AND** have the employee stand and perform the fit-test exercises in Table 19. 9. Interpret the test results: • The test is **PASSED IF** the overall fit factor obtained is at least 100 for a half facepiece, or at least 500 for a full facepiece • The test has **FAILED IF** the fit factor is less than 100 for a half facepiece; 500 for a full facepiece – If the test has **FAILED** you must have the employee select another respirator model or size following the steps in Table 11 **AND** repeat this procedure, starting at Step 6.

Table 18

Generated Aerosol Test Procedure
Important: • This is a quantitative (QNFT) fit-test procedure • In this method, a test aerosol is used to challenge the facepiece seal while aerosol concentrations inside and outside the facepiece are measured during test exercises • Special equipment is needed to generate, disperse, detect, and measure test aerosols.
Test Preparations
1. Test aerosol. • Use a particulate, for example, corn oil, polyethylene glycol 400, di-2-ethyl hexyl sebacate, or sodium chloride. 2. Instrumentation. • Do **ALL** the following: – Obtain and use aerosol generation, dilution, and measurement systems appropriate for particulates – Use an aerosol-generating instrument that will maintain test concentrations within a 10% variation – Select a sampling instrument that allows for a computer record or strip chart record to be created ■ The record must show the rise and fall of test agent concentration during each inhalation and exhalation at fit factors of at least 2000. **Note:** Integrators, or computers that integrate the amount of test agent penetration leakage into the respirator for each exercise, may be used if a record of the readings is made. – Minimize the time interval between the activity and the recording of the activity so you can clearly connect what you see to what is being recorded. For example, use a small diameter and length of sampling line. 3. Test enclosure. • Do **ALL** the following: – Make sure the enclosure is equipped and constructed to effectively: ■ Maintain a uniform concentration of the test agent inside the enclosure. For example, the enclosure must be large enough to allow **ALL** employees freedom of movement during testing **WITHOUT** disturbing the test concentration or measurement instrument ■ Keep the test agent from contaminating the air outside the enclosure. For example, use a HEPA filter to purify exhausted air ■ Allow the individual conducting the fit test to view the employee during the test – Make sure the tubing used to collect samples from the enclosure **AND** respirator is the same material, diameter, **AND** length. This makes the effect of aerosol loss caused by deposition in each sample line equal – If sodium chloride is used, relative humidity inside the enclosure must be kept below 50%. 4. Prepare test respirators. • Do **ALL** the following: – Inspect test respirators regularly for missing parts **AND** damage – Keep test respirators in proper working order – Make sure in-mask sampling probes are: ■ Designed and installed so the air sample will be drawn from the employee's breathing zone; midway between the nose and mouth **AND** ■ The probe extends inside the facepiece at least 1/4 inch – Make sure sampling ports such as probes, or adapters on respirators are constructed and installed so they do **NOT:** ■ Block air flow into the sampling line ■ Leak ■ Interfere with the respirator's fit or performance • Have high efficiency particulate air (HEPA) filters **OR** P100 series filter available – Replace filters when increased breathing resistance is detected **OR** when the test agent has altered the filter material's integrity.
Test
Important! • Throughout the test, maintain the employee's exposure to any test agent below the established exposure limit. Exposures allowed must be based on exposure time and exposure limit duration • If a single peak penetration exceeds 5% for half facepieces OR 1% for full facepieces: – **STOP** the test **AND** – Have the employee select another respirator for testing. 5. Have the employee attach filters, put on, adjust, and seal check the respirator. • Be sure to crimp the sampling line to avoid pressure leaks during the seal check **AND** • Have the employee adjust the respirator straps, without assistance, so the fit is comfortable. Do **NOT** over tighten.

Generated Aerosol Test Procedure

6. **OPTIONAL Step.** To save time conduct a screening test to quickly identify poorly fitting respirators.

Note:

You may use a qualitative screening test **OR** an ambient aerosol condensation nuclei counter instrument in the count mode.

7. Make sure test aerosol concentration is reasonably stable.
   - If a canopy or shower curtain enclosure is used, determine stability of the test aerosol concentration **AFTER** the employee enters the enclosure.
8. Have the employee enter the test enclosure and connect the respirator to the sample lines.
9. Immediately after entering the enclosure measure test aerosol concentration inside the respirator.
   - Make sure the peak penetration does **NOT** exceed 5% for half facepieces, **OR** 1% for full facepieces.
10. Have employee perform the appropriate fit-test exercises in Table 19.
    - Do **NOT** adjust the respirator once exercises begin.
11. Calculate the overall fit factor as specified in Steps 12-13. The fit test is:
    - **PASSED IF** the minimum fit factor of 100 for half facepieces **OR** 500 for full facepieces is obtained

    OR
    - IF a passing fit factor is **NOT** obtained, the test has **FAILED** and you must have the employee select and test another respirator.

Calculations

Important!

- Do **NOT** count the grimace exercise measurements during these calculations
- Take into account the limitations of instrument detection when determining fit factors.

12. Calculate individual fit factors for **EACH** exercise by applying the following:

$$\text{Exercise fit factor (ffE)} = \frac{\text{Average test enclosure concentration}}{\text{Test aerosol concentration inside the respirator}}$$

- To determine the average test enclosure concentration use one of the following methods:
  - – Arithmetic average of the concentration before and after each **test** (an average of two values per entire test)
  - – Arithmetic average of concentration before and after each **exercise** (an average of two values per exercise)
  - – True average measured continuously during the respirator sample
- Determine the test aerosol concentration inside the respirator in one of the following ways:
  - – Average peak penetration values. Determine aerosol penetration for each exercise by:
    - ■ Using integrators or computers that calculate the actual test agent penetration

      OR
    - ■ Average the peak heights shown on the strip chart recording, graph, or by computer integration
  - – Maximum peak penetration. Use strip chart recordings to determine the highest peak penetration for each exercise and use this value
  - – Area under the peaks. Use computerized integration or other appropriate calculations to integrate the area under individual peaks for each exercise.

13. Using individual exercise fit factors (ffE) calculate the **overall fit factor** by doing **ALL** of the following:
    - Convert each exercise fit factor to a penetration value
    - Determine the average penetration value
    - Convert the average penetration value back to a fit factor

    OR

    Use this equation to calculate the **overall fit factor:**

$$\text{Overall fit factor} = \frac{n}{1/ffE1 + 1/ffE2 + 1/ffE3 \ldots + 1/ffEn}$$

Table 19

Fit-Test Exercises

Important:

- This list applies when you use any fit test
- Employees tested must perform **ALL** exercises marked with an "X" as described for the fit-test procedure used
  - – Once exercises begin, any adjustments made void the test AND you must begin again
  - – After test exercises are completed, you must ask the employee about the comfort of the respirator. If it has become unacceptable, have the employee choose another one for testing
- When the controlled negative pressure procedure is used, **STOP and repeat** the test if the employee adjusts the respirator OR takes a breath and fails to hold it for 10 seconds

Fit-Test Exercises			
• Controlled negative pressure tests conducted according to the method published in 29 CFR 1910.134, Appendix A are an acceptable alternative to the method outlined below.			
	Fit-Test Procedures		
Description of Required Fit-Test Exercises	Qualitative Procedures	Quantitative Procedures; **EXCEPT** the **CNPP**	Controlled Negative Pressure Procedure (CNPP)
• Normal breathing – Breathe normally, while standing for one minute	X	X	
• Deep breathing – Breathe slowly and deeply while standing for one minute – Take caution to avoid hyperventilating	X	X	
• Head side to side – Slowly turn head from side to side while standing for one minute, pausing at each extreme position to inhale – Be careful to **NOT** bump the respirator	X	X	
• Head up and down – Slowly move head up and down while standing for one minute, inhaling in the up position – Be careful to **NOT** bump the respirator	X	X	
• Talking – Talk slowly and loud enough to be heard clearly by the individual conducting fit testing for one minute. Choose **ONE** of the following: ■ Read from a prepared text such as the Rainbow Passage[1] ■ Count backward from 100 ■ Recite a memorized poem or song.	X	X	
• Grimace – Smile or frown for fifteen seconds.		X	
• Bending over – Bend over to touch toes while standing. Repeat at a comfortable pace for one minute **OR** – Jog in place for one minute if the test enclosure, such as a hood, does not permit bending over	X	X	
• Normal breathing – Breathe normally while standing for one minute	X	X	
• Face forward – **Premeasurement activity:** Stand and breath normally, without talking – **Measurement position:** Face forward while holding breath for 10 seconds			X
• Bending over – **Premeasurement activity:** While standing, bend over to touch toes – **Measurement position:** Hold the bending position with face parallel to the floor while holding breath for 10 seconds			X
• Head shaking – **Premeasurement activity:** Vigorously shake head from side to side for 3 seconds while shouting or making the sound of "BRRRR" loudly – **Measurement position:** Face forward, while holding breath for 10 seconds			X
• Redon-1 – **Premeasurement activity:** Remove the respirator completely and put it back on			X

Fit-Test Exercises			
– **Measurement position:** Face forward while holding breath for 10 seconds			
• Redon-2 – Repeat the premeasurement activity and measurement position described in Redon-1			X

[1] The Rainbow Passage:
"When the sunlight strikes raindrops in the air, they act like a prism and form a rainbow. The rainbow is a division of white light into many beautiful colors. These take the shape of a long round arch, with its path high above, and its two ends apparently beyond the horizon. There is, according to legend, a boiling pot of gold at one end. People look, but no one ever finds it. When a man looks for something beyond reach, his friends say he is looking for the pot of gold at the end of the rainbow."

[Statutory Authority: RCW 49.17.010, 49.17.040, 49.17.050, and 49.17.060. 03-20-114, § 296-842-22010, filed 10/1/03, effective 1/1/04.]

WAC 296-842-22015 Follow procedures established for cleaning and disinfecting respirators.
You must:
• Follow the procedure in Table 20 for cleaning and disinfecting respirators.

Table 20
Respirator Cleaning Procedure

Step	Task
1.	Remove filters, cartridges, canisters, speaking diaphragms, demand and pressure valve assemblies, hoses, or any components recommended by the manufacturer. • Discard or repair any defective parts.
2.	Wash components in warm (43°C [110°F] maximum) water with a mild detergent or with a cleaner recommended by the manufacturer • A stiff bristle (not wire) brush may be used to help remove the dirt • If the detergent or cleaner does not contain a disinfecting agent, respirator components should be immersed for two minutes in one of the following: – A bleach solution (concentration of 50 parts per million of chlorine). Make this by adding approximately one milliliter of laundry bleach to one liter of water at 43°C (110°F) – A solution of iodine (50 parts per million iodine). Make this in two steps: ■ First, make a tincture of iodine by adding 6-8 grams of solid ammonium iodide and/or potassium iodide to 100 cc of 45% alcohol approximately ■ Second, add 0.8 milliliters of the tincture to one liter of water at 43°C (110°F) to get the final solution – Other commercially available cleansers of equivalent disinfectant quality when used as directed, if their use is recommended or approved by the respirator manufacturer.
3.	Rinse components thoroughly in clean, warm (43°C [110°F] maximum), preferably, running water. **Note:** The importance of thorough rinsing cannot be overemphasized. Detergents or disinfectants that dry on facepieces could cause dermatitis. In addition, some disinfectants may cause deterioration of rubber or corrosion of metal parts, if not completely removed.
4.	Drain components.
5.	Air-dry components or hand dry components with a clean, lint-free cloth.
6.	Reassemble the facepiece components. • Replace filters, cartridges, and canisters, if necessary (for testing).
7.	Test the respirator to make sure all components work properly.

[Statutory Authority: RCW 49.17.010, 49.17.040, 49.17.050, and 49.17.060. 03-20-114, § 296-842-22015, filed 10/1/03, effective 1/1/04.]

Reviser's note: RCW 34.05.395 requires the use of underlining and deletion marks to indicate amendments to existing rules, and deems ineffectual changes not filed by the agency in this manner. The bracketed material in the above section does not appear to conform to the statutory requirement.

WAC 296-842-22020 Follow procedures established for seal checking respirators.

IMPORTANT:

• User seal checks are **NOT** a substitute for fit tests. See WAC 296-842-22010 for fit test procedures.

• You may use a seal check procedure recommended by the respirator manufacturer **INSTEAD** of the procedure outlined in Table 21 if you can demonstrate the procedure is based on a scientific study that, for example, demonstrates the procedure effectively identifies respirators that fit poorly when put on or adjusted.

You must:

• Make sure employees perform a user seal check as outlined in Table 21, **EACH TIME** the respirator is worn, to make sure the seal is adequate.

Table 21

User Seal Check Procedure
Important information for employees: • You need to conduct a seal check **each time** you put your respirator on **BEFORE** you enter the respirator use area. The purpose of a seal check is to make sure your respirator (which has been previously fit tested by your employer) is properly positioned on your face to prevent leakage during use and to detect functional problems • The procedure below has two parts; a positive pressure check and a negative pressure check. **You must complete both parts each time.** It should only take a few seconds to perform, once you learn it ❖ If you cannot pass both parts, your respirator is NOT functioning properly, see your supervisor for further instruction.
Positive pressure check: 1. Remove exhalation valve cover, if removable. 2. Cover the exhalation valve completely with the palm of your hand **WHILE** exhaling gently to inflate the facepiece slightly. 3. The respirator facepiece should remain inflated (indicating a build-up of positive pressure and **NO** outward leakage). • If you detect **NO** leakage, replace the exhalation valve cover (if removed), and proceed to conduct the negative pressure check • If you detect evidence of leakage, reposition the respirator (after removing and inspecting it), and try the positive pressure check again.
Negative pressure check: 4. Completely cover the inhalation opening(s) on the cartridges or canister with the palm(s) of your hands **WHILE** inhaling gently to collapse the facepiece slightly. • If you cannot use the palm(s) of your hands to effectively cover the inhalation openings on cartridges or canisters, you may use: – Filter seal(s) (if available) **OR** – Thin rubber gloves. 5. Once the facepiece is collapsed, hold your breath for 10 seconds **WHILE** keeping the inhalation openings covered. 6. The facepiece should remain slightly collapsed (indicating negative pressure and **NO** inward leakage). • If you detect **NO** evidence of leakage, the tightness of the facepiece is considered adequate, the procedure is completed, and you may now use the respirator • If you detect leakage, reposition the respirator (after removing and inspecting it) and repeat **BOTH** the positive and negative fit checks.

[Statutory Authority: RCW 49.17.010, 49.17.040, 49.17.050, and 49.17.060. 03-20-114, § 296-842-22020, filed 10/1/03, effective 1/1/04.]

WAC 296-842-300 Definitions.

Air-purifying respirator (APR)

A respirator equipped with an air-purifying element such as a filter, cartridge, or canister, **OR** having a filtering facepiece, for example, a dust mask.

The element or filtering facepiece is designed to remove specific contaminants, such as particles, vapors, or gases, from air that passes through it.

Air-line respirator

An atmosphere-supplying respirator for which breathing air is drawn from a source separate from and not worn by the user, such as:

• A cylinder or a tank
• A compressor
• An uncontaminated environment.

Air supplied respirator (see air-line respirator)

Assigned protection factor (APF)

Indicates the expected level of workplace respiratory protection WHEN the respirator is:

• Functioning properly

AND

• Fitted to the user

AND

• Worn by trained individuals

AND

• Used with the limitations specified on the NIOSH approval label.

Atmosphere-supplying respirator

A respirator that supplies the user with breathing air from sources, such as:

• A cylinder or a tank
• A compressor
• An uncontaminated environment.

Breathing air

Air supplied to an atmosphere-supplying respirator. This air meets the specifications found in WAC 296-842-200.

Canister or cartridge (air-purifying)

Part of an air-purifying respirator that consists of a container holding materials such as fiber, treated charcoal, or a combination of the two, that removes contaminants from the air passing through the cartridge or canister.

Cartridge respirator (see also air-purifying respirator)

An air-purifying respirator equipped with one or more cartridges. These respirators have a facepiece made from silicone, rubber OR other plastic-like materials.

Demand respirator

An atmosphere-supplying respirator that sends breathing air to the facepiece only when suction (negative pressure) is created inside the facepiece by inhalation. Demand respirators are **"negative pressure"** respirators.

Dust mask

A name used to refer to filtering-facepiece respirators. Dust masks may or may not be NIOSH certified. See filtering facepiece.

Emergency respirator

Respirators suitable for rescue, escape, or other activities during emergency situations.

Emergency situation

Any occurrence that could **OR** does result in a significant uncontrolled release of an airborne contaminant. Causes of

emergency situations include, but are not limited to, equipment failure, rupture of containers, or failure of control equipment.

End-of-service-life indicator (ESLI)

A system that warns the air-purifying respirator user that cartridges or canisters must be changed. An example of an ESLI is a dot on the respirator cartridge that changes color.

Escape-only respirator

A respirator that can only be used to exit during emergencies. Look for this use limitation on the respirator's NIOSH approval label.

Exposed, or exposure

The contact an employee has with a toxic substance, harmful physical agent, or oxygen deficient condition. Exposure can occur through various routes of entry, such as inhalation, ingestion, skin contact, or skin absorption.

Filter

Fibrous material that removes dust, spray, mist, fume, fog, smoke particles, **OR** other aerosols from the air.

Filtering-facepiece respirator

A tight-fitting, half-facepiece, negative-pressure, particulate air-purifying respirator with the facepiece **MAINLY** composed of filter material. These respirators do not use cartridges or canisters and may have sealing surfaces composed of rubber, silicone or other plastic-like materials. They are sometimes referred to as "dust masks."

Fit factor

A number providing an estimate of fit for a particular respiratory inlet covering to a specific individual during quantitative fit testing.

Fit test (see also qualitative fit test and quantitative fit test)

Fit testing is an activity where the facepiece seal of a respirator is challenged, using a WISHA accepted procedure, to determine if the respirator provides an adequate seal.

Full-facepiece respirator

A tight-fitting respirator that covers the wearer's nose, mouth, and eyes.

Gas mask

An air-purifying respirator equipped with one or more canisters. These respirators have a facepiece made from silicone, rubber OR other plastic-like materials.

Half-facepiece respirator

A tight-fitting respirator that only covers the wearer's nose and mouth.

Helmet

The rigid part of a respirator that covers the wearer's head AND also provides head protection against impact or penetration.

High-efficiency particulate air filter (HEPA)

A powered air purifying respirator (PAPR) filter that removes at least 99.97% of monodisperse dioctyl phthalate (DOP) particles with a mean particle diameter of 0.3 micrometer from contaminated air.

Note: Filters designated, under 42 CFR Part 84, as an "N100," "R100," or "P100" provide the same filter efficiency (99.97%) as HEPA filters.

Hood

The part of a respirator that completely covers the wearer's head and neck AND may also cover some or all of the shoulders and torso.

Immediately dangerous to life or health (IDLH)

An atmospheric condition that would:

• Cause an immediate threat to life

OR

• Cause permanent or delayed adverse health effects

OR

• Interfere with an employee's ability to escape.

Licensed health care professional (LHCP)

An individual whose legally permitted scope of medical practice allows him or her to provide **SOME OR ALL** of the health care services required for respirator users' medical evaluations.

Loose-fitting facepiece

A respiratory inlet covering that is designed to form a partial seal with the face.

Negative-pressure respirator

Any tight-fitting respirator in which the air pressure inside the facepiece is less than the air pressure outside the respirator during inhalation.

NIOSH

The National Institute for Occupational Safety and Health. NIOSH is the federal agency that certifies respirators for occupational use.

Oxygen deficient

An atmosphere with an oxygen content below 19.5% by volume.

Permissible exposure limit (PEL)

Permissible exposure limits (PELs) are employee exposures to toxic substances or harmful agents that must not be exceeded. PELs are specified in applicable WISHA chapters.

Positive-pressure respirator

A respirator in which the air pressure inside the respiratory-inlet covering is greater than the air pressure outside the respirator.

Powered air-purifying respirators (PAPRs)

An air-purifying respirator equipped with a blower that draws ambient air through cartridges or canisters. These respirators, as a group, are **NOT** classified as positive pressure respirators and must not be used as such.

Pressure-demand respirator

A positive-pressure atmosphere-supplying respirator that sends breathing air to the respiratory inlet covering when the positive pressure is reduced inside the facepiece by inhalation or leakage.

Qualitative fit test (QLFT)

A test that determines the adequacy of respirator fit for an individual. The test relies on the employee's ability to detect a test substance. Test results are either "pass" or "fail."

Quantitative fit test (QNFT)

A test that determines the adequacy of respirator fit for an individual. The test relies on specialized equipment that performs numeric measurements of leakage into the respiratory inlet covering. Test results are used to calculate a "fit factor."

Respiratory hazard

Harmful airborne hazards and oxygen deficiency that are addressed in chapter 296-841 WAC, Respiratory hazards.

Required use

Respirator use:

• That is necessary to protect employees from respiratory hazards

OR

• That the employer decides to require for his or her own reasons. For example, the employer decides to follow more rigorous exposure limits

Respirator

A type of personal protective equipment designed to protect the wearer from harmful airborne hazards, oxygen deficiency, or both.

Respiratory inlet covering

The part of a respirator that forms the protective barrier between the user's respiratory tract and an air-purifying device or breathing air source or both. The respiratory inlet covering may be a facepiece, helmet, hood, suit, or mouthpiece respirator with nose clamp.

Seal check

Actions conducted by the respirator user each time the respirator is put on, to determine if the respirator is properly seated on the face.

Self-contained breathing apparatus (SCBA)

An atmosphere-supplying respirator designed for the breathing air source, to be carried by the user.

Service-life

The period of time that a respirator, filter or sorbent, or other respiratory equipment provides adequate protection to the wearer. For example, the period of time that sorbent cartridge is effective for removing a harmful substance from the air.

Sorbent

Rigid, porous material, such as charcoal, used to remove vapor or gas from the air.

Supplied-air respirator (see air-line respirator)

Tight-fitting facepiece

A respiratory inlet covering forming a complete seal with the face OR neck. Mouthpiece respirators are not tight-fitting facepieces.

Voluntary use

Respirator use that is requested by the employee **AND** permitted by the employer when **NO** respiratory hazard exists.

[Statutory Authority: RCW 49.17.010, 49.17.040, 49.17.050, and 49.17.060. 03-20-114, § 296-842-300, filed 10/1/03, effective 1/1/04.]

Chapter 296-843 WAC
HAZARDOUS WASTE OPERATIONS

WAC

296-843-100	Scope.
296-843-110	Evaluations and inspections.
296-843-11005	Complete a preliminary site evaluation before allowing employees to enter the site.
296-843-11010	Conduct ongoing evaluations of safety and health hazards.
296-843-120	Health and safety plan (HASP).
296-843-12005	Develop and maintain a written site-specific health and safety plan (HASP).
296-843-130	Sampling and monitoring.
296-843-13005	Conduct monitoring for health and safety hazards during initial site entry.
296-843-13010	Evaluate employee exposure to hazardous substances during clean-up operations.
296-843-140	Site control.
296-843-14005	Establish site control.
296-843-150	Worker and equipment decontamination.
296-843-15005	Establish and implement decontamination procedures before any worker or equipment enters a contaminated area.
296-843-15010	Provide showers and changing rooms.
296-843-15015	Provide washing facilities.
296-843-160	Emergency response for hazardous waste sites.
296-843-16005	Establish an emergency response plan for anticipated emergencies before beginning hazardous waste operations.
296-843-170	Employee exposure controls.
296-843-17005	Control employee exposure to site health and safety hazards.
296-843-180	Drum and container handling.
296-843-18005	Handle drums and containers safely.
296-843-18010	Handle drums and containers suspected of containing shock-sensitive (explosive) wastes safely.
296-843-18015	Maintain worker safety in drum and container opening areas.
296-843-18020	Ship and transport drums and containers safely.
296-843-190	Personal protective equipment (PPE).
296-843-19005	Provide and use appropriate PPE.
296-843-200	Training, briefings, and information.
296-843-20005	Inform workers, contractors and subcontractors about the hazardous waste site.
296-843-20010	Train workers, supervisors and managers before work begins on the site.
296-843-20015	Provide additional training to your managers and supervisors.
296-843-20020	Training for postemergency response.
296-843-20025	Make sure your employees receive written documentation of training.
296-843-20030	Provide refresher training to employees.
296-843-20035	Use qualified trainers.
296-843-210	Medical surveillance.
296-843-21005	Provide medical surveillance for your employees.
296-843-220	Recordkeeping and information access.
296-843-22005	Make your records accessible.
296-843-22010	Keep medical surveillance records for your employees.
296-843-300	Definitions.

WAC 296-843-100 Scope. This chapter applies if you have any of the following:

• Employees working in operations involving hazardous waste at a treatment, storage, and disposal (TSD) facility required to have a permit or interim status AND regulated by any of the following:

– 40 CFR Parts 264 and 265 under the Resource Conservation and Recovery Act of 1976 (RCRA), 42 U.S.C. 6901 et seq.;

– Agencies implementing RCRA through agreements with the United States Environmental Protection Agency (U.S.E.P.A.);

– Chapter 173-303 WAC, Dangerous waste regulations;

OR

• Employees conducting initial investigations of government-identified sites before determining whether hazardous substances are present;

OR

• Corrective actions, involving clean-up operations, at sites covered by the Resource Conservation and Recovery Act of 1976 (RCRA) as amended (42 U.S.C. 6901 et seq.) or chapter 70.105 RCW, Hazardous waste management;

OR

• Employees performing clean-up operations at an uncontrolled hazardous waste site. Sites include, but are not limited to:

– The Environmental Protection Agency's (EPA) National Priority Site List (NPL); see http://www.epa.gov/superfund/sites/npl/wa.htm;

– Sites recommended for inclusion on the EPA NPL;

– State priority site lists, for example those listed under chapter 173-340 WAC, Model Toxics Control Act (MTCA); see http://www.ecy.wa.gov/programs/tcp/cscs/CSCSpage.HTM;

– Unlisted sites recognized by a federal, state or local government as an uncontrolled hazardous waste site. Examples of such sites include:

■ Sites that do not meet clean-up goals established by the MTCA and that pose a threat or potential threat to human health or the environment;

■ Clandestine drug lab sites designated for cleanup;

– Postemergency response cleanup at the site of a hazardous substance release regulated by chapter 296-824 WAC, Emergency response.

IMPORTANT:

This chapter applies to hazardous waste sites until cleanup at the site is determined to be complete by the governing regulatory agency.

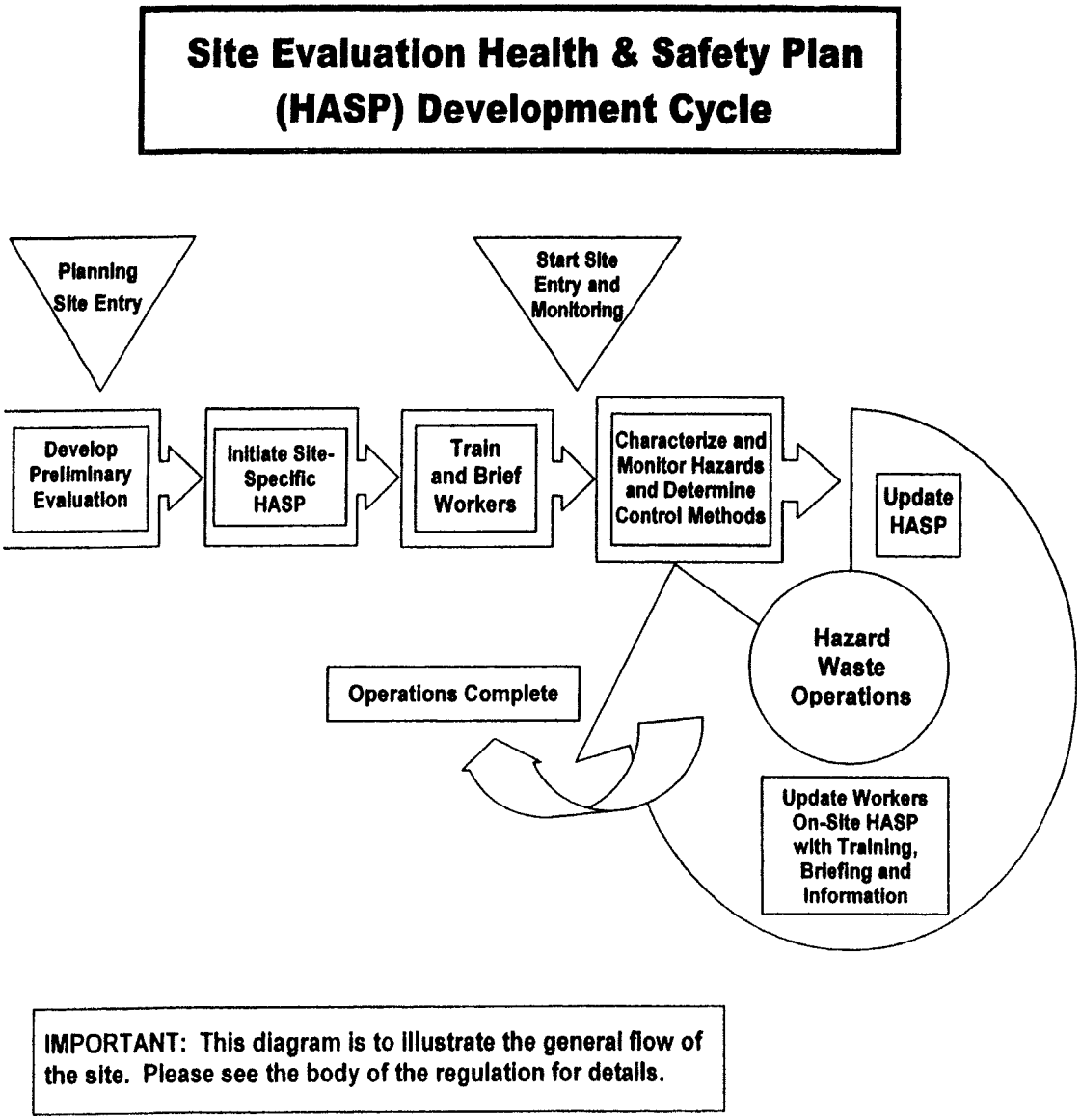

Illustration 1

Other rules that may apply to hazardous waste operations:

You will find safety and health requirements (for example, personal protective equipment) are addressed in other rules and also in this chapter. If you find a conflict in requirements, you need to meet the more protective requirement. Contact your local L&I office if you need assistance in making this determination.

Examples of other rules that may apply:

• Chapter 296-800 WAC, Safety and health core rules:

– WAC 296-800-140, Accident prevention program;

– WAC 296-800-210, Lighting;

– WAC 296-800-230, Drinking water, bathrooms, washing facilities and waste disposal.

• Chapter 296-24 WAC, Safety standards for general safety.

• Chapter 296-833 WAC, Temporary housing for workers.

• Chapter 296-62 WAC, General occupational health.

• Chapter 296-155 WAC, Safety standards for construction work.

• Chapter 296-824 WAC, Emergency response.

• Chapter 296-841 WAC, Respiratory hazards.

• Chapter 296-842 WAC, Respirators.

[Statutory Authority: RCW 49.17.010, 49.17.040, 49.17.050, and 49.17.060. 04-02-053, § 296-843-100, filed 1/5/04, effective 5/1/04.]

WAC 296-843-110 Evaluations and inspections.

Your responsibility:

To conduct evaluations before entering the site and periodically throughout the hazardous waste operations.

You must:

Complete a preliminary site evaluation before allowing employees to enter the site

WAC 296-843-11005.

Conduct ongoing evaluations of safety and health hazards

WAC 296-843-11010.

[Statutory Authority: RCW 49.17.010, 49.17.040, 49.17.050, and 49.17.060. 04-02-053, § 296-843-110, filed 1/5/04, effective 5/1/04.]

WAC 296-843-11005 Complete a preliminary site evaluation before allowing employees to enter the site.

You must:

• Complete a preliminary site evaluation by doing all the following:

Collect or develop the following information to the extent available:	• The site location and approximate size • A description of the response activity and the job tasks to be performed • The time needed to cover all planned activities • The site's topography and all ways to access the site • The current status and capabilities of any emergency response team assisting during an emergency • The safety and health hazards expected at the site • The hazardous substances and health hazards at the site, including their chemical and physical properties • All hazardous substance dispersion pathways • An emergency response plan
Have a qualified person evaluate the preliminary site information to identify:	• Potential site hazards and risks • The most appropriate methods to protect employees • Conditions that have the potential to cause death or serious harm, including potential inhalation or skin absorption hazards that are immediately dangerous to life or health (IDLH) – Examples include: ■ Confined space entry ■ Potentially explosive or flammable environments ■ Visible vapor clouds ■ Areas where plants or animals have died • Risks related to specific on-site hazardous substances and health hazards – Examples include: ■ Exposures exceeding the permissible exposure limits (PELs) or published exposure levels ■ IDLH concentrations ■ Potential skin absorption and irritation sources ■ Potential eye irritation sources ■ Explosion sensitivity and flammability ranges ■ Oxygen deficient atmospheres
Have a qualified person prepare an initial site characterization and analysis for the site to:	• Identify known and suspected health and safety hazards for the site • Aid in selecting control methods to protect employees from site hazards • Brief employees on site conditions before any work starts • Initiate the site-specific health and safety plan (HASP)

Note: Characterization and analysis of site hazards is an ongoing process for work on the hazardous waste site.

[Statutory Authority: RCW 49.17.010, 49.17.040, 49.17.050, and 49.17.060. 04-02-053, § 296-843-11005, filed 1/5/04, effective 5/1/04.]

WAC 296-843-11010 Conduct ongoing evaluations of safety and health hazards.

You must:

(1) Have a qualified person complete further evaluation of health and safety hazards at the site immediately after initial entry to:

• Identify site hazards in more detail.

• Help select appropriate:

– Control methods to protect employees from site hazards.

– Personal protective equipment (PPE) for site operations.

Note: For more information, see WAC 296-843-170, Hazard controls, and WAC 296-843-190, Personal protective equipment.

You must:

(2) Make sure your site safety and health supervisor or another qualified person performs periodic inspections to:

• Determine if the site-specific HASP is effective.

• Correct any deficiencies.

[Statutory Authority: RCW 49.17.010, 49.17.040, 49.17.050, and 49.17.060. 04-02-053, § 296-843-11010, filed 1/5/04, effective 5/1/04.]

WAC 296-843-120 Health and safety plan (HASP).

Your responsibility:

To establish a written health and safety plan (HASP).

You must:

Develop and maintain a written site-specific health and safety plan (HASP)

WAC 296-843-12005.

[Statutory Authority: RCW 49.17.010, 49.17.040, 49.17.050, and 49.17.060. 04-02-053, § 296-843-120, filed 1/5/04, effective 5/1/04.]

WAC 296-843-12005 Develop and maintain a written site-specific health and safety plan (HASP).

Reference: If your overall program required under WAC 296-800-140, Accident prevention program (APP), meets requirements of this chapter, you do not need to duplicate those portions of your APP in the site-specific health and safety plan (HASP).

You must:

• Develop a written HASP for each hazardous waste site, **BEFORE** beginning hazardous waste operations, that includes at least the following:

Hazard analysis:

– Identification and evaluation of on-site safety and health hazards.

– A safety and health risk (hazard) analysis for each site task and operation that is identified in the comprehensive work plan.

Organization chart:

– An organizational structure that reflects current site operations, including the following:

■ Establish and identify the chain of command.

■ Identify the site safety and health supervisor and other personnel responsible for employee safety and health.

■ Specify the overall responsibilities of supervisors and employees.

■ Include the name and title of the person with responsibility and authority to direct all hazardous waste operations.

■ Include a site safety and health supervisor responsible for developing and implementing the HASP and verifying compliance.

■ Identify the functions and responsibilities of all personnel needed for hazardous waste operations and emergency response.

■ Identify site specific lines of authority, responsibility, and communication.

Comprehensive work plan:

– A written comprehensive work plan of tasks, objectives, logistics, and resources for site operations, including the following:

■ Addresses anticipated clean-up activities and normal operating procedures unless that information is already available in another document.

■ Defines work tasks and objectives.

■ Describes how the work tasks and objectives will be accomplished.

■ Establishes the personnel requirements to implement the work plan.

■ Provides for implementation of training, briefings, and information as required by WAC 296-843-200.

Site control plan:

– An up-to-date site control plan before clean-up operations begin to minimize employee exposure to hazardous substances and including the following (unless it's available in another document):

■ A site map.

■ Establish site work zones.

■ How the "buddy system" is used.

■ The site communications plan, including how employees are alerted during emergencies.

■ The site's standard operating procedures (SOPs) or safe work practices.

■ Identification of the nearest medical assistance.

Personal protective equipment:

– A PPE plan that addresses all of the following:

■ Site hazards and activities.

■ Methods to evaluate the effectiveness of the PPE plan.

■ Criteria for selecting and fitting PPE, including work duration, use limitations of particular PPE, and medical considerations such as temperature extremes and heat stress.

■ Training on PPE use.

■ Procedures for putting on and taking off PPE.

■ PPE inspection procedures prior to, during, and after use.

■ Decontamination and disposal of PPE.

■ Maintenance and storage of PPE.

Additional elements:

– A sampling and monitoring plan (see WAC 296-843-130) that includes sampling of drums and containers.

– Site control measures (see WAC 296-843-140).

– Decontamination procedures (see WAC 296-843-150).

– Spill containment plans (see WAC 296-843-180, Drum and container handling).

– Standard operating procedures for sampling, managing, and handling drums and containers (see WAC 296-843-180).

– Entry procedures for tanks or vaults (see WAC 296-62-141, Confined spaces).

– A training, briefings, and information plan (see WAC 296-843-200).

– A medical surveillance plan (see WAC 296-843-210), that includes site-specific medical surveillance requirements.

– Sanitation (see WAC 296-155-140).

– Lighting (see WAC 296-800-210).

– Excavations (see chapter 296-155 WAC, Part N, Excavation, trenching and shoring).

– Any relationship or interaction between other programs and the site-specific program.

Note: The emergency response plan required by WAC 296-843-160, Emergency response for hazardous waste sites, is also included as a separate section in the HASP.

You must:

• Keep a copy of your HASP on site.

Reference: For more information, see WAC 296-843-220, Recordkeeping and information access.

[Statutory Authority: RCW 49.17.010, 49.17.040, 49.17.050, and 49.17.060. 04-02-053, § 296-843-12005, filed 1/5/04, effective 5/1/04.]

WAC 296-843-130 Sampling and monitoring.

Your responsibility:

To conduct monitoring for health and safety hazards to protect employees.

You must:

Conduct monitoring for health and safety hazards during initial site entry

WAC 296-843-13005.

Evaluate employee exposure to hazardous substances during clean-up operations

WAC 296-843-13010.

[Statutory Authority: RCW 49.17.010, 49.17.040, 49.17.050, and 49.17.060. 04-02-053, § 296-843-130, filed 1/5/04, effective 5/1/04.]

WAC 296-843-13005 Conduct monitoring for health and safety hazards during initial site entry.

You must:

• Make visual observations of the site to detect signs of actual or potential immediately dangerous to life or health (IDLH) or other dangerous conditions.

• Conduct representative air monitoring with direct reading test equipment, when the preliminary site evaluation does not eliminate the potential for ionizing radiation or IDLH conditions.

• Assess the following:

– Potential IDLH conditions.

– Exposure over radioactive material dose limits.

– Potential exposure over permissible exposure limits (PELs) or other published exposure levels.

– Other dangerous conditions, such as the presence of flammable or oxygen-deficient atmospheres.

Reference: See WAC 296-62-09004, Ionizing radiation, for additional information about radioactive material dose limits.

[Statutory Authority: RCW 49.17.010, 49.17.040, 49.17.050, and 49.17.060. 04-02-053, § 296-843-13005, filed 1/5/04, effective 5/1/04.]

WAC 296-843-13010 Evaluate employee exposure to hazardous substances during clean-up operations.

IMPORTANT:

The clean-up operation begins when soil, surface water, or containers are moved or disturbed.

You must:

• Identify the type of personnel monitoring and environmental sampling you plan to use, including instrumentation.

• Include requirements for maintaining and calibrating the monitoring and sampling instruments used.

• Monitor whenever employees may be exposed to concentrations exceeding PELs or other published exposure levels.

• Evaluate employees who are likely to have the highest exposure:

– Monitor all employees who are likely to have the highest exposure to hazardous substances or health hazards above the PEL or published exposure limit.

– Use personal sampling frequently enough to characterize the exposures of these employees.

■ When results indicate exposure is over the PEL or other published exposure level, identify all employees likely to be above the PEL or published exposure limit.

Note: You may use a representative sampling approach by documenting that the employees and chemicals chosen for monitoring are representative of both:
- Employee exposure to hazardous substances;

AND
- Employees not sampled.

You must:

• Conduct monitoring when the possibility of one of the following exists:

– An atmosphere that is immediately dangerous to life or health (IDLH);

OR

– A flammable atmosphere;

OR

– Employee exposures exceeding PELs or other published exposure levels.

Examples of situations where these possibilities may exist:

■ Work begins on a different portion of the site.

■ Contaminants other than those previously monitored are being handled.

■ A different type of site operation starts, such as moving from drum opening to exploratory well drilling.

■ Handling leaking drums or containers.

■ Working in areas with obvious liquid contamination such as a spill or lagoon.

■ Time has passed and employee exposure levels may have significantly increased.

[Statutory Authority: RCW 49.17.010, 49.17.040, 49.17.050, and 49.17.060. 04-02-053, § 296-843-13010, filed 1/5/04, effective 5/1/04.]

WAC 296-843-140 Site control.

Your responsibility:

To establish a plan to control access to the site.

You must:

Establish a site control plan
WAC 296-843-14005.

[Statutory Authority: RCW 49.17.010, 49.17.040, 49.17.050, and 49.17.060. 04-02-053, § 296-843-140, filed 1/5/04, effective 5/1/04.]

WAC 296-843-14005 Establish site control.

You must:

• Maintain site work zones and site control as required by Table 1, Site Work Zone Requirements.

• Control access to the exclusion and contamination reduction zones.

• Make sure people wear personal protective equipment (PPE) appropriate to their work zone.

Table 1
Site Work Zone Requirements

For this type of work zone:	You must:
Exclusion zone	• Establish entry and exit checkpoints on the zone's boundary • Regulate the flow of people and equipment into and out of the zone • Make sure exits go through a contamination reduction corridor
Contamination reduction zone with a contamination reduction corridor	• Enter through a control point from the clean zone • Provide a transition or buffer between the exclusion zone and the clean zone • Perform all decontamination procedures • Establish separate decontamination routes for people and equipment, if practical • Remove all PPE worn in the contamination reduction or exclusion zones before entering the clean zone
Clean zone or support zone	Have no employee exposure to hazardous substances or health hazards

Note: See Illustration 2 for an example of site work zones.

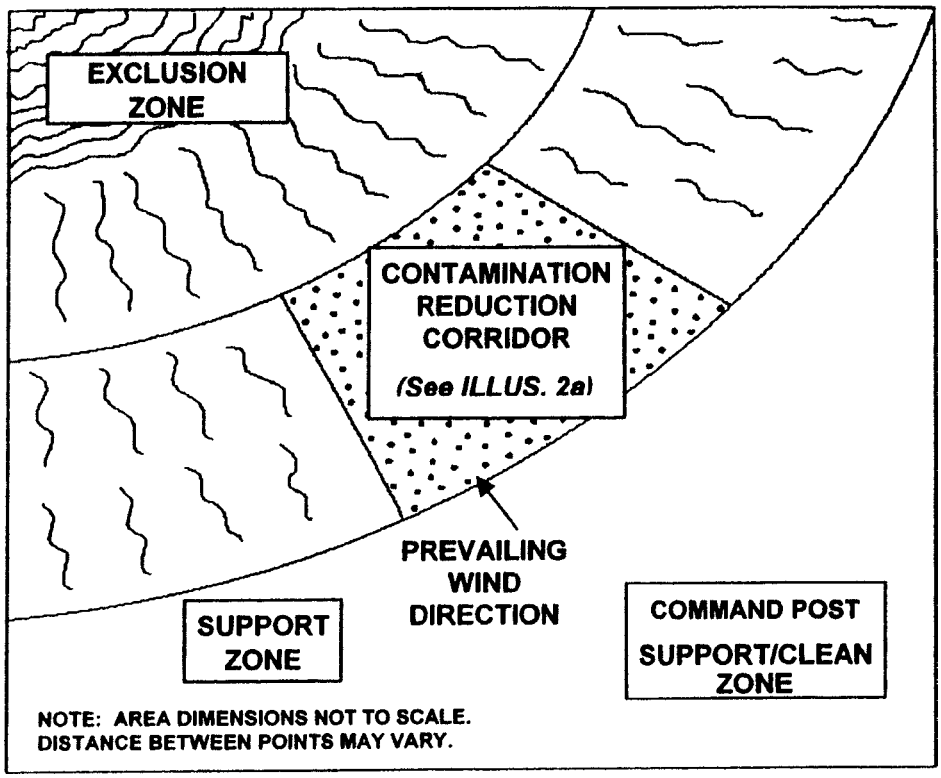

Illustration 2 - SITE WORK ZONES

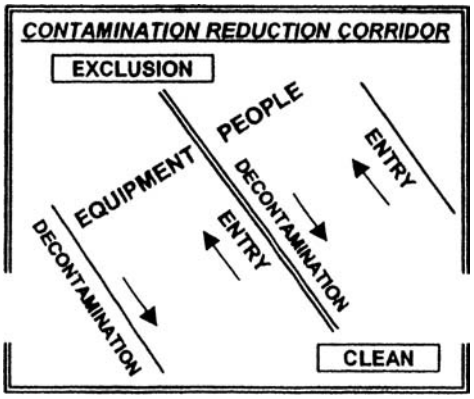

Illustration 2a - CONTAMINATION REDUCTION CORRIDOR

[Statutory Authority: RCW 49.17.010, 49.17.040, 49.17.050, and 49.17.060. 04-02-053, § 296-843-14005, filed 1/5/04, effective 5/1/04.]

WAC 296-843-150 Worker and equipment decontamination.

Your responsibility:

To make sure the necessary facilities and equipment for effective decontamination are available and used.

You must:

Establish and implement decontamination procedures before any worker or equipment enters a contaminated area

WAC 296-843-15005.

Provide showers and changing rooms

WAC 296-843-15010.

Provide washing facilities

WAC 296-843-15015.

[Statutory Authority: RCW 49.17.010, 49.17.040, 49.17.050, and 49.17.060. 04-02-053, § 296-843-150, filed 1/5/04, effective 5/1/04.]

WAC 296-843-15005 Establish and implement decontamination procedures before any worker or equipment enters a contaminated area.

You must:

• Establish, implement, and communicate decontamination procedures to all workers, to include the following:

– Standard operating procedures to minimize worker contact with:

■ Hazardous substances.

■ Contaminated equipment.

– Decontaminating all:

■ Workers leaving a contaminated area.

■ Equipment leaving a contaminated area.

– Decontaminating, cleaning, laundering, repairing, or replacing protective clothing or equipment (PPE) as needed to maintain effectiveness.

– Immediate removal of clothing, such as cotton coveralls, wet with hazardous substances and use of the nearest shower.

■ Decontaminate or dispose of clothing before removal from the work zone.

– Periodically monitoring procedures for effectiveness by the site safety and health supervisor.

– Correct your procedures when found ineffective.

– Establish decontamination areas to minimize contact of contaminated employees and equipment with uncontaminated employees or equipment.

– Make sure only authorized employees remove protective clothing or equipment from changing rooms.

– Inform commercial laundries or cleaning establishments about the potentially harmful effects from exposure to hazardous substances.

– Properly decontaminate or dispose of decontamination equipment and solvents.

[Statutory Authority: RCW 49.17.010, 49.17.040, 49.17.050, and 49.17.060. 04-02-053, § 296-843-15005, filed 1/5/04, effective 5/1/04.]

WAC 296-843-15010 Provide showers and changing rooms.

You must:

• Provide changing areas and showers outside a contaminated area, when needed for worker decontamination, that include at least the following:

– Separate changing areas:

■ One to provide a clean area where employees can remove, store, and put on street clothing with an exit leading off the work site.

■ Another where employees can put on, remove, store, and dispose of work clothing and PPE with an exit leading to the work site.

– A shower area separating the changing areas.

• Prevent clean areas from being contaminated by hazardous substances.

• Provide and use other effective means for worker cleansing, if temperature conditions prevent the effective use of water.

• Locate showers and change rooms where worker exposures are below permissible exposure limits (PELs) or other published exposure levels.

– If this cannot be accomplished, use a ventilation system to supply air that is below the PELs or published exposure levels.

• Make sure all workers shower at the end of their work shift or before they leave the site, when needed for worker decontamination.

Illustration 3 is a sample diagram of a change room layout.

Change Room Layout

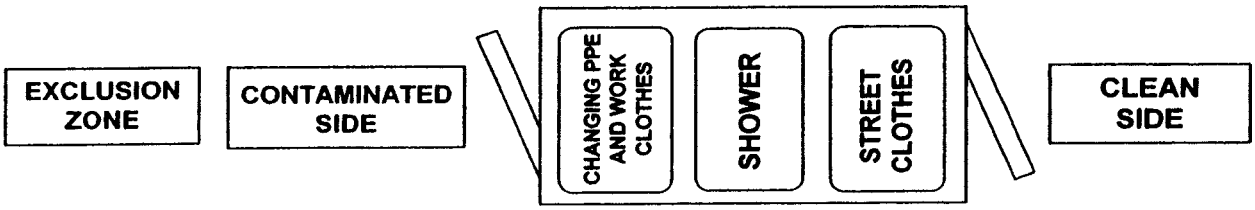

Illustration 3

[Statutory Authority: RCW 49.17.010, 49.17.040, 49.17.050, and 49.17.060. 04-02-053, § 296-843-15010, filed 1/5/04, effective 5/1/04.]

WAC 296-843-15015 Provide washing facilities.

You must:

• Provide adequate washing facilities to employees working in hazardous waste operations that are:

– Close and convenient to the work area.

– Located in areas where employee exposure is below PELs or other published exposure levels.

– Equipped so an employee can remove hazardous substances from themselves without assistance.

[Statutory Authority: RCW 49.17.010, 49.17.040, 49.17.050, and 49.17.060. 04-02-053, § 296-843-15015, filed 1/5/04, effective 5/1/04.]

WAC 296-843-160 Emergency response for hazardous waste sites.

Your responsibility:

To establish an emergency response plan for emergencies at the hazardous waste site.

You must:

Establish an emergency response plan for anticipated emergencies before beginning hazardous waste operations

WAC 296-843-16005.

[Statutory Authority: RCW 49.17.010, 49.17.040, 49.17.050, and 49.17.060. 04-02-053, § 296-843-160, filed 1/5/04, effective 5/1/04.]

WAC 296-843-16005 Establish an emergency response plan for anticipated emergencies before beginning hazardous waste operations.

Exemption: Employers are exempt from preparing an emergency response plan if they do ALL of the following:

- Evacuate all employees from the danger area during an emergency.
- Prohibit employees from assisting in the emergency response.
- Prepare an emergency action plan that complies with WAC 296-24-567(1), Evacuation plan.

IMPORTANT:

Treatment, storage, and disposal (TSD) employers are not required to duplicate subjects fully addressed in the contingency plan required by permits when the contingency plan is part of their emergency response plan. Examples of permits would be those issued by the department of ecology.

You must:

(1) Establish and maintain the plan to reflect current site conditions, information, and personnel:

• Include policies or procedures for at least the following:

– Preemergency planning.

– Coordination with outside organizations.

– Current site topography, layout, and weather conditions.

– Personnel roles.

– Lines of authority.

– Communication.

– Reporting incidents to local, state, and federal government agencies.

– Emergency recognition and prevention.

– Safe distances and places of refuge.

– Site security and control.

– Evacuation routes.

– Decontamination not covered by the site-specific HASP.

– Emergency medical treatment and first aid.

– Emergency alert and response.

– Personal protective equipment and emergency equipment.

– Employee training.

– Critique of the response effort and appropriate followup.

• Use available information at the time of the emergency to:

– Evaluate the incident and site response capabilities.

– Proceed with appropriate steps to implement your emergency response plan.

• Make sure the emergency response plan is:

– Kept as a separate section of your site-specific health and safety plan (HASP);

AND

– Integrated and compatible with, local, state, and federal plans for disasters, fires, and emergency responses.

(2) Establish an alarm system to alert employees to all of the following:

• An on-site emergency incident:

– To stop work activities, if necessary.

– To lower background noise to assist communication.

– To begin emergency procedures.

(3) Rehearse the plan as part of site operations training.

[Statutory Authority: RCW 49.17.010, 49.17.040, 49.17.050, and 49.17.060. 04-02-053, § 296-843-16005, filed 1/5/04, effective 5/1/04.]

WAC 296-843-170 Employee exposure controls.

Your responsibility:

Implement feasible controls to protect employees from exposure to site hazards.

You must:

Control employee exposure to site health and safety hazards

WAC 296-843-17005.

[Statutory Authority: RCW 49.17.010, 49.17.040, 49.17.050, and 49.17.060. 04-02-053, § 296-843-170, filed 1/5/04, effective 5/1/04.]

WAC 296-843-17005 Control employee exposure to site health and safety hazards.

You must:

• Use feasible controls, selected based on monitoring and other available information, to protect employee exposure above permissible exposure limits (PELs) or other published exposure levels.

– Examples of controls include:

■ Installing pressurized cabs or control booths on equipment.

■ Using remotely operated material handling equipment.

■ Removing all nonessential employees when opening drums.

■ Wetting down dusty operations.

■ Positioning employees upwind of possible hazards.

• Evaluate new technologies and other control measures before using them on a large scale.

• Use any reasonable combination of controls and personal protective equipment (PPE) to reduce and maintain employee exposure at or below the PELs, published exposure levels, or dose levels when controls are not:

– Feasible;

OR

– Effective.

• Make sure PPE is NOT used as a replacement control.

– PPE should be used only as a supplement to controls.

Note: For those hazardous substances without PELs or published exposure levels, use other published literature and material safety data sheets (MSDSs) to help decide what level of protection is appropriate. For more information about MSDSs, see WAC 296-800-180 in the *Safety and Health Core Rules* book.

You must:

• Use employee rotation to reduce exposure below ionizing radiation PELs or dose limits, when that is the **only** feasible means of protecting employees.

[Statutory Authority: RCW 49.17.010, 49.17.040, 49.17.050, and 49.17.060. 04-02-053, § 296-843-17005, filed 1/5/04, effective 5/1/04.]

WAC 296-843-180 Drum and container handling.

Your responsibility:

To handle drums and containers in ways that minimize the hazard to employees.

You must:

Handle drums and containers safely

WAC 296-843-18005.

Handle drums and containers suspected of containing shock-sensitive (explosive) wastes safely

WAC 296-843-18010.

Maintain worker safety in drum and container opening areas

WAC 296-843-18015.

Ship and transport drums and containers safely

WAC 296-843-18020.

IMPORTANT:

• Containers or drums containing shock-sensitive (explosive) or potentially shock-sensitive wastes require special handling precautions.

• Handle, transport, label, and dispose of drums and containers according to this chapter and other United States Department of Transportation (DOT), WISHA, EPA, and Washington department of ecology regulations for:

– Drums.

– Containers.

– Hazardous substances.

– Contaminated soils.

– Liquids, and other residues.

[Statutory Authority: RCW 49.17.010, 49.17.040, 49.17.050, and 49.17.060. 04-02-053, § 296-843-180, filed 1/5/04, effective 5/1/04.]

WAC 296-843-18005 Handle drums and containers safely.

Preparation for moving drums and containers:

You must:

• Assess hazards to employees, such as radioactive waste, before handling drums and containers.

• Consider unlabeled drums and containers to contain hazardous substances and handle them accordingly, until the contents are positively identified, labeled, and assessed for hazards.

• Inspect and make sure drums and containers are sound before moving them.

– If it is not practical to inspect drums without moving them, move drums and containers to an accessible location and inspect prior to further handling.

• Remove soil or other materials covering drums or containers with caution to prevent rupture.

• Use ground-penetrating systems or other types of detection systems or devices to estimate the location and depth of buried drums or containers.

• Use the sampling plan and procedures included in the site-specific HASP to sample the contents of containers and drums.

Moving drums and containers:

You must:

• Warn all employees exposed to drum movement operations about the potential hazards associated with the contents of the drums or containers prior to moving them.

• Minimize movement of drums or containers.

• Select, position, and operate tools and material handling equipment to prevent the ignition of flammable vapors.

• Handle tanks and vaults containing hazardous substances with the same precautions as for drums and containers, taking into account the size of tank or vault.

Handling spills and leaks:

You must:

• Contain and isolate the entire volume of a hazardous substance in a drum or container when a spill occurs.

• Have available and use both of the following in areas where spills, leaks, or ruptures may occur:

– United States Department of Transportation (DOT) specified salvage drums or containers.

– Suitable quantities of proper absorbent materials.

• Empty drums and containers, that cannot be moved without rupturing, leaking, or spilling, into a sound container.

– Use a pump or other device classified for the material being transferred.

• Have fire-extinguishing equipment on-hand to control fires in their initial stage.

Reference: For further information, see the safety and health core rules, WAC 296-800-300, Portable fire extinguishers.

[Statutory Authority: RCW 49.17.010, 49.17.040, 49.17.050, and 49.17.060. 04-02-053, § 296-843-18005, filed 1/5/04, effective 5/1/04.]

WAC 296-843-18010 Handle drums and containers suspected of containing shock-sensitive (explosive) wastes safely.

You must:

• Allow only essential employees in the transfer area.

• Communicate as follows:

– Signal the beginning and end of shock-sensitive (explosive) waste handling activities with an alarm system that is capable of being perceived above background light and noise.

– Maintain continuous communications throughout the handing operation:

■ Between the employee-in-charge of the immediate handling area AND the site safety and health supervisor AND the command post.

■ Using portable radios, hand signals, or telephones, as appropriate.

– Prevent the use of communication equipment or methods that could cause shock-sensitive (explosive) materials to explode.

• Provide material handling equipment with explosive containment devices or shields to protect equipment operators from exploding containers.

• Do not move bulging or swollen drums or containers until the cause for excess pressure is determined and you can move the drum or container safely.

• Consider packaged laboratory wastes or laboratory waste packs shock-sensitive or explosive until the contents have been characterized.

– Make sure laboratory waste packs are opened only:

■ When necessary.

■ By a person knowledgeable in the inspection, classification, and segregation of the containers within the pack.

[Statutory Authority: RCW 49.17.010, 49.17.040, 49.17.050, and 49.17.060. 04-02-053, § 296-843-18010, filed 1/5/04, effective 5/1/04.]

WAC 296-843-18015 Maintain worker safety in drum and container opening areas.

You must:

• Keep employees who are not involved in opening drums or containers a safe distance from the opening area.

• Use appropriate shielding between the employee and the drums or containers, when excess interior pressure cannot be relieved from a remote location.

• Provide an explosion-resistant barrier that does not interfere with the work to protect employees working near or adjacent to drum or container opening operations from accidental explosions.

• Position controls for drum or container opening equipment, monitoring equipment, and fire suppression equipment behind the explosion-resistant barrier. Prohibit employees from standing on or working from drums or containers.

Reference: The shipment of shock-sensitive (explosive) waste may be prohibited under United States Department of Transportation (DOT) regulations. You and your shipper should refer to title 49 CFR.

[Statutory Authority: RCW 49.17.010, 49.17.040, 49.17.050, and 49.17.060. 04-02-053, § 296-843-18015, filed 1/5/04, effective 5/1/04.]

WAC 296-843-18020 Ship and transport drums and containers safely.

You must:

(1) Identify and classify drum and container contents prior to packaging for shipment.

(2) Provide staging areas:

• Each staging area must have adequate entry and exit routes.

• The number of drum or container staging areas must be kept to the minimum needed to identify and classify materials safely and prepare them for transport.

(3) Permit bulking of hazardous wastes only after a thorough characterization of the wastes has been completed.

Note: Handle, transport, label, and dispose of drums and containers according to this chapter and other United States Department of Transportation (DOT), WISHA, EPA, and Washington department of ecology regulations for:
• Drums.
• Containers.
• Hazardous substances.
• Contaminated soils.

[Statutory Authority: RCW 49.17.010, 49.17.040, 49.17.050, and 49.17.060. 04-02-053, § 296-843-18020, filed 1/5/04, effective 5/1/04.]

WAC 296-843-190 Personal protective equipment (PPE).

Your responsibility:

To use PPE to protect employees when feasible controls do not remove the hazardous exposure.

You must:

Provide and use appropriate PPE

WAC 296-843-19005.

Reference: For additional information about developing a PPE plan, see the PPE user guide found at http://www.lni.wa.gov/wisha/publications/PPEGuide/PPEload.htm.

Note: The manufacturer's information on PPE may be used to meet your PPE plan requirements. For example, the manufacturer's procedures for putting on and taking off PPE may be attached to the site-specific health and safety plan (HASP).

[Statutory Authority: RCW 49.17.010, 49.17.040, 49.17.050, and 49.17.060. 04-02-053, § 296-843-190, filed 1/5/04, effective 5/1/04.]

WAC 296-843-19005 Provide and use appropriate PPE.

Reference: See WAC 296-843-110, Evaluations and inspections, found in this chapter, for more information about how to identify hazards and complete your preliminary site evaluation.

You must:

(1) Make sure the PPE you provide and use for initial entry protects employees from known or suspected safety and health hazards identified during the preliminary site evaluation as follows:

If	Then
The need for atmosphere supplying respirators and chemical protective clothing has NOT been eliminated	Provide atmosphere supplying respirators and protective clothing
Employees use respiratory protection other than a positive-pressure SCBA for initial entry	Include an escape self-contained breathing apparatus (SCBA) with enough air to reach a safe location and always at least five minutes of air

• Use Table 2, Selecting PPE in Various Exposure Situations, to determine the level of PPE to provide during initial entry:

You must:

(2) Make sure the PPE you select provides employee protection based on:

• Actual and potential hazards identified during the site characterization and analysis (see WAC 296-843-110, Evaluations and inspections).

• Hazards likely to be encountered.

• Required tasks and their duration.

• Site requirements and limitations.

• Use Table 2 to identify the type of PPE that is required for various exposure situations.

Table 2
Selecting PPE in Various Exposure Situations

If	Then
Changing site conditions indicate a change in employee exposure	Review and adjust the level of protection as appropriate **Note:** You may decrease the level of protection when information indicates this will not increase employee exposure to safety or health hazards
There is a substantial possibility that skin absorption or contact with a hazardous substance may: • Impair an employee's ability to escape • Cause immediate serious illness or injury • Is an IDLH or immediate death hazard	Use totally encapsulating chemical protective (TECP) suits and make sure they will protect employees from the hazards • Use, decontaminate, inspect, and remove TECP suits from service according to the manufacturer's recommendations • Perform any TECP integrity tests recommended by the manufacturer and make sure all TECP suits are capable of: – Maintaining positive air pressure – Preventing inward test gas leakage of more than 0.5% **Note:** Follow the manufacturer's recommended procedures for testing a TECP suit's ability to maintain positive air pressure and prevent inward gas leakage. Other established test protocols for these suits, for example, NFPA 1991 and ASTM F1052-97, may also be used
There is a substantial possibility that employee exposure to hazardous substances will either:	Use a positive-pressure SCBA or an airline respirator with an escape SCBA

If	Then
• Immediately cause death, serious illness, or serious injury **OR** • Impair an employee's ability to escape	• Protect air supply from contamination and the entire respirator system from physical damage

Note: If there is not a permissible exposure limit (PEL) or other published exposure level for a hazardous substance, you may use published studies and information as a guide for selecting appropriate PPE.

[Statutory Authority: RCW 49.17.010, 49.17.040, 49.17.050, and 49.17.060. 04-02-053, § 296-843-19005, filed 1/5/04, effective 5/1/04.]

WAC 296-843-200 Training, briefings, and information.

Your responsibility:

To make sure employees and subcontractors have the training and information needed to work safely.

You must:

Inform workers and employers about the hazardous waste site

WAC 296-843-20005.

Train workers, supervisors and managers before work begins on the site

WAC 296-843-20010.

Provide additional training to your managers and supervisors

WAC 296-843-20015.

Training for postemergency response

WAC 296-843-20020.

Make sure your employees receive written documentation of training

WAC 296-843-20025.

Provide refresher training to employees

WAC 296-843-20030.

Use qualified trainers

WAC 296-843-20035.

IMPORTANT:

If law enforcement personnel participate in clean-up activities, they must receive appropriate hazardous waste clean-up training as described in this chapter.

[Statutory Authority: RCW 49.17.010, 49.17.040, 49.17.050, and 49.17.060. 04-02-053, § 296-843-200, filed 1/5/04, effective 5/1/04.]

WAC 296-843-20005 Inform workers, contractors and subcontractors about the hazardous waste site.

You must:

• Inform employees, contractors, and subcontractors or their representatives, about:

– The nature, level, and degree of exposure to hazardous substances they're likely to encounter.

– All site-related emergency response procedures.

– Any identified potential fire, explosion, health, safety, or other hazards.

• Conduct briefings for employees, contractors, and subcontractors, or their representatives as follows:

– A preentry briefing before any site activity is started.

– Additional briefings, as needed, to make sure that the site-specific HASP is followed.

– Make sure all employees working on the site are:

■ Informed of any risks identified.

■ Trained on how to protect themselves and other workers against the site hazards and risks.

• Update all information to reflect current site activities and hazards.

[Statutory Authority: RCW 49.17.010, 49.17.040, 49.17.050, and 49.17.060. 04-02-053, § 296-843-20005, filed 1/5/04, effective 5/1/04.]

WAC 296-843-20010 Train workers, supervisors and managers before work begins on the site.

IMPORTANT:

• The eighty-hour training requirement does NOT apply to law enforcement personnel entering illicit drug labs, securing the premises, and obtaining evidence. Attendance at a forty-hour training course, such as presented by the criminal justice training commission, is acceptable.

• These training requirements do not apply to workers engaged in limited postemergency response activities provided they meet the conditions described in WAC 296-843-20020.

You must:

• Make sure workers have received twenty-four-, forty- or eighty-hour training as required by Table 3 before participating in hazardous waste operations.

• Make sure workers also receive site-specific training that thoroughly covers at least the following:

– The personnel responsible for employee safety and health.

– Safety, health, and other hazards known or suspected at the site.

– Use of personal protective equipment.

– Work practices to minimize worker's risk from the hazards.

– Use of engineering and other controls and equipment on the site.

– Medical surveillance provided.

– Recognition of signs and symptoms that might indicate overexposure to site hazards.

– The contents of the site-specific health and safety plan (HASP) required by this chapter.

Note: The site-specific training can be provided as part of the twenty-four-, forty- or eighty-hour training or as part of the employee briefings provided all training and information requirements of WAC 296-843-200 are met.

Table 3
Training Requirements

If	Then	Notes
Work and exposures require use of atmosphere supplying respirators	Provide eighty hours of training and three days of supervised on-site field experience	Eighty-hour training may be fulfilled as follows:

If	Then	Notes
		• One eighty-hour training session with emphasis on hazards requiring the use of atmosphere-supplying respirators and of chemical protective clothing **OR** • One forty-hour training class as described below and an additional forty hours of training that emphasizes hazards requiring the use of atmosphere-supplying respirators and of chemical protective clothing Refresher training, previous courses, supervised field experience, and previous work experience may count towards the additional forty hours, if it improves the worker's competency to use respirators and chemical protective clothing ensembles and procedures
Work and exposures may exceed the PEL or require protective clothing but do not require atmosphere supplying respirators	Provide forty hours of training and three days of supervised on-site field experience	Workers with twenty-four hours of training may become forty hour trained with sixteen hours of off-site training and two additional days of supervised on-site field experience
Workers are occasionally on-site to perform specific limited tasks and unlikely to be exposed above PELs or other published exposure limits	Provide twenty-four hours of training and one day of supervised on-site field experience	
Workers are regularly on-site but work in areas fully characterized and monitored, with exposure under the PELs or other published exposure limits: • No need for respirators • No health hazards • No possibility of an emergency	Provide twenty-four hours of training and one day of supervised on-site field experience	
Workers are at TSD facilities under normal operations (this does not include corrective actions cleanup at these facilities)	Provide twenty-four hours of training and one day of supervised on-site field experience	
Employees perform emergency response activities	Train workers to a level of competence in site emergencies, consistent with their assigned duties, to protect themselves and other employees	
Workers qualify for limited postemergency response clean-up training	Provide at least eight hours of training	See WAC 296-843-20020, Training for postemergency response, for detailed training information
Workers have been previously trained (includes equivalent training)	Provide site-specific training, briefings and information required by this chapter and supervised field experience on the site of one day for twenty-four-hour and three days for forty- or eighty-hour trained workers	Document equivalent training and work experience as required by WAC 296-843-20025

Note: When calculating "training hours," WISHA assumes a "normal" workday of eight hours with sufficient time for lunch and other breaks.

[Statutory Authority: RCW 49.17.010, 49.17.040, 49.17.050, and 49.17.060. 04-02-053, § 296-843-20010, filed 1/5/04, effective 5/1/04.]

WAC 296-843-20015 Provide additional training to your managers and supervisors.

You must:

• Make sure the following receive appropriate training:

– On-site managers.

– Supervisors responsible for hazardous waste operations.

– Supervisors who directly supervise employees in hazardous waste operations.

• Make sure such supervisors and on-site managers receive the same training as that required by the workers they supervise (see WAC 296-843-20010).

• Make sure such supervisors and managers receive a minimum of eight additional hours of specialized training including the following information:

– Written site-specific health and safety plan (HASP):

■ Training plan.

■ Personal protective equipment (PPE) plan.

■ Spill containment plan.

■ Emergency management procedures to use when a release of hazardous substances occurs.

■ Federal, state, and local agencies to be contacted if there is a release of hazardous substances.

■ Sampling and monitoring plan (including procedures and techniques for monitoring health hazards).

– Managing hazardous wastes and their disposal.

[Statutory Authority: RCW 49.17.010, 49.17.040, 49.17.050, and 49.17.060. 04-02-053, § 296-843-20015, filed 1/5/04, effective 5/1/04.]

WAC 296-843-20020 Training for postemergency response.

You must:

• Provide workers who participate only in limited postemergency response clean-up operations with a minimum of eight hours of training, when these conditions are met:

– Cleanup is at a site that is a hazardous waste operation only because of an emergency response.

– Clean-up work is directly supervised by someone who has completed at least forty hours of training in hazardous waste operations as required in this chapter.

– Written documentation is maintained at the work site supporting less than twenty-four hours of training.

– The work:

■ Is performed in an area that has been monitored and fully characterized by a qualified person as an area where employee exposure cannot exceed PELs or other published exposure levels.

■ Does not require using respiratory protection.

■ Does not require entry into permit-required confined spaces.

■ Involves minimal health risks from skin exposure and absorption that are effectively controlled by PPE.

– Workers have received training in your emergency response plan and hazard communication program.

Reference: For additional information, see WAC 296-843-160, Emergency response, and WAC 296-800-170, Employer chemical hazard communication.

You must:

• Make sure workers complete any other safety and health training needed to perform assigned clean-up tasks in a safe and healthful manner.

– Training may include topics such as the following:

■ Safety hazards and controls.

■ The content and availability of the site-specific health and safety plan.

■ Decontamination procedures.

■ Operating procedures related to assigned clean-up tasks.

■ PPE use and limitations.

■ Hands-on exercises for PPE and decontamination.

■ Information about heat stress and hypothermia.

• Make sure workers have been trained within the last twelve months.

[Statutory Authority: RCW 49.17.010, 49.17.040, 49.17.050, and 49.17.060. 04-02-053, § 296-843-20020, filed 1/5/04, effective 5/1/04.]

WAC 296-843-20025 Make sure your employees receive written documentation of training.

You must:

• Certify and document annually that each manager, supervisor, and worker has either:

– Attended and successfully completed the training required by this section;

OR

– Demonstrated their competency.

■ Record and maintain the method used to demonstrate competency.

• Make sure your employees and supervisors who complete required training and field experience receive written training documentation authenticated by the responsible trainer.

• Provide a copy of the certification or documentation to your employee upon request.

Note: Equivalent training may include academic or work-related training that covers subjects required by this chapter.

[Statutory Authority: RCW 49.17.010, 49.17.040, 49.17.050, and 49.17.060. 04-02-053, § 296-843-20025, filed 1/5/04, effective 5/1/04.]

WAC 296-843-20030 Provide refresher training to employees.

You must:

• Make sure all certified employees, supervisors, and managers receive eight hours of refresher training at least every twelve months that covers:

– The topics specified in WAC 296-843-200.

– Assessments or evaluations of work-related incidents.

– Any other relevant topics.

[Statutory Authority: RCW 49.17.010, 49.17.040, 49.17.050, and 49.17.060. 04-02-053, § 296-843-20030, filed 1/5/04, effective 5/1/04.]

WAC 296-843-20035 Use qualified trainers.

You must:

Use trainers that:

• Have demonstrated competent instructional skills.

• Demonstrate knowledge of the subject matter and have either:

– Satisfactorily completed a training program in the subject;

OR

– Have the academic credentials and instructional experience needed for teaching the subject.

[Statutory Authority: RCW 49.17.010, 49.17.040, 49.17.050, and 49.17.060. 04-02-053, § 296-843-20035, filed 1/5/04, effective 5/1/04.]

WAC 296-843-210 Medical surveillance.

Your responsibility:

To provide medical surveillance for employees that work in hazardous waste operations.

You must:

Provide medical surveillance for your employees WAC 296-843-21005.

[Statutory Authority: RCW 49.17.010, 49.17.040, 49.17.050, and 49.17.060. 04-02-053, § 296-843-210, filed 1/5/04, effective 5/1/04.]

WAC 296-843-21005 Provide medical surveillance for your employees.

You must:

• Establish a medical surveillance plan for all employees who meet any of the following:

– Are or may be exposed to hazardous substances or health hazards for at least thirty days a year, at or above the permissible exposure limits (PELs) or other published exposure levels.

– Wear a respirator for at least thirty days a year.

– Are injured, become ill, or develop signs or symptoms of possible overexposure to hazardous substances or health hazards.

– Are hazardous materials team (HAZMAT) members.

Reference: Employees who use respirators less than thirty days a year are required to have a respirator medical evaluation as outlined by chapter 296-842 WAC, Respirators. Completion of a medical examination required by this section will meet the requirement for a respirator medical evaluation.

You must:

• Make sure medical examinations, consultations, and procedures are:

– Scheduled according to Table 4, Medical Examination Schedule.

– Performed or supervised by a licensed physician.

– Available:

■ At a reasonable time and place.

■ Without loss of pay.

■ Without cost to employees.

Note: Examples of costs include: Mileage, gas, bus fare, and time spent outside normal work hours.

Table 4
Medical Examination Schedule

If a worker	Then provide an examination
Is assigned to work that is covered by this chapter	Before work assignment begins
Continues to work in hazardous waste operations	At least once every twelve months, unless the attending physician decides a different interval, up to twenty-four months or less than twelve months, is appropriate
Needs to be examined more frequently based on the examining physician's medical judgment	At an interval less than twelve months
Is reassigned to an area where their work is not covered **OR** Employment is terminated	As soon as possible, unless he or she was examined within the past six months
Has an incident that results in injury or illness **OR** Develops signs or symptoms of possible overexposure to hazardous substances and health hazards **OR** Has been exposed above the permissible exposure limits or published exposure levels	As soon as possible
Requires follow-up examinations or consultations because of medical necessity for an exposure incident or injury	When determined by the examining physician

You must:

• Make sure the medical examination includes the following information for each affected employee:

– A medical and work history, with special emphasis on symptoms related to handling hazardous substances and health hazards.

– Information about fitness for duty including the ability to wear any personal protective equipment (PPE) under conditions that may be expected at the workplace.

– Any additional information that is determined by the examining physician.

Note: The physician should consult the NIOSH Occupational Safety and Health Guidance Manual for Hazardous Waste Site Activities http://www.cdc.gov/niosh/85-115.html.

You must:

• Provide complete information to the examining physician, including:

– A copy of WAC 296-843-210.

– Medical evaluation information required by chapter 296-842 WAC, Respirators.

– A description of the employee's duties that relate to hazardous substance exposure.

– The actual or anticipated hazardous substance exposure levels for the employee.

– A description of the PPE the employee uses or could use.

– Information available from previous medical examinations.

– Instruction to the physician that the physician's written opinion NOT include specific findings or diagnoses that are not related to occupational exposures.

Note: You are NOT required to send duplicate information to the physician for each employee.

You must:

• Obtain the physician's written medical opinion that includes the following information:

– Whether medical conditions were found that would increase the employee's risk for impairment during emergency response work or respirator use.

– Limitations of the employee's assigned work, if any.

– Examination and test results, if the employee requests this information.

– A statement that the employee has been confidentially informed of medical examination results (including medical conditions requiring followup required by WAC 296-843-210).

• Provide the employee with a copy of the physician evaluation.

[Statutory Authority: RCW 49.17.010, 49.17.040, 49.17.050, and 49.17.060. 04-02-053, § 296-843-21005, filed 1/5/04, effective 5/1/04.]

WAC 296-843-220 Recordkeeping and information access.

Your responsibility:

To keep records and make them accessible to employees.

You must:

Make your records accessible
WAC 296-843-22005.

Keep medical surveillance records for your employees
WAC 296-843-22010.

[Statutory Authority: RCW 49.17.010, 49.17.040, 49.17.050, and 49.17.060. 04-02-053, § 296-843-220, filed 1/5/04, effective 5/1/04.]

WAC 296-843-22005 Make your records accessible.

You must:

• Allow your written health and safety plan (HASP) and all other written plans required by this chapter to be inspected and copied by:

– Employees or their designated representative.

– Site contractors or their designated representatives.

– Subcontractors or their designated representatives.

– Personnel of any federal, state, or local agency with regulatory authority over the site.

[Statutory Authority: RCW 49.17.010, 49.17.040, 49.17.050, and 49.17.060. 04-02-053, § 296-843-22005, filed 1/5/04, effective 5/1/04.]

WAC 296-843-22010 Keep medical surveillance records for your employees.

You must:

• Keep medical surveillance records for each affected employee that include:

– The employee's name and Social Security number.

– Physicians' written opinions including recommended limitations and results of examinations and tests.

– Any employee medical complaints regarding hazardous substance exposures.

– A copy of all information given to the examining physician (except a copy of this chapter).

• Keep each employee's records for at least the duration of his or her employment plus thirty years.

Reference: For additional requirements on medical and exposure records, see chapter 296-62 WAC, Part B, Access to records.

[Statutory Authority: RCW 49.17.010, 49.17.040, 49.17.050, and 49.17.060. 04-02-053, § 296-843-22010, filed 1/5/04, effective 5/1/04.]

WAC 296-843-300 Definitions.

Buddy system

A system of organizing employees into work groups so that each employee is assigned to observe another employee in the same work group. The purpose of this system is to provide rapid assistance to employees in the event of an emergency.

Clean-up operation

An operation where hazardous substances are removed, contained, incinerated, neutralized, stabilized, cleared up, or in any other manner processed or handled with the goal of making the site safer for people or the environment.

Contamination reduction zone

The buffer zone between the exclusion and the clean zone.

Decontamination

The removal of hazardous substances from employees and equipment, to the extent necessary, to avoid foreseeable adverse health effects.

Emergency response or responding to emergencies

An organized response to an anticipated release of a hazardous substance that is, or could become, an uncontrolled release.

Exclusion zone

A controlled area at a site, where contamination occurs, that is a risk to human health or the environment.

Exposure or exposed

Employee contact with a toxic substance, harmful physical agent, or oxygen deficient condition. Exposure can occur through various routes of entry, such as inhalation, ingestion, skin contact, or skin absorption.

Facility

Any building structure, installation, equipment, pipe, or pipeline (including any pipe into a sewer or publicly owned treatment works), well, pit, pond, lagoon, impoundment, ditch, storage container, motor vehicle, rolling stock, or aircraft;

OR

Any site or area where a hazardous substance has been deposited, stored, disposed of, placed, or otherwise located (not including any boat, ship or barge).

Hazardous substance

Any of the following substances that could adversely affect an exposed employee's health or safety:

• Substances defined under section 101(14) of the Comprehensive Environmental Response, Compensation and Liability Act of 1980 (CERCLA) or "Superfund" Act (found at: http://www.epa.gov).

• Biological or other disease-causing agents released that could reasonably be expected to cause death, disease, behavioral abnormalities, cancer, genetic mutation, physiological malfunctions, including malfunctions in reproduction, or physical deformations in a person or their offspring when the person:

– Is directly exposed to the agent in the environment.

– Directly ingests, inhales, or assimilates the agent from the environment.

– Indirectly ingests the agent through a food chain.

• Substances listed by the United States Department of Transportation as hazardous materials under Title 49 (Transportation) in the Code of Federal Regulations (CFR), Part 172, section 101 and appendices (found at: http://www.nara.gov, search for "List of CFR subjects").

• Hazardous wastes as defined in this chapter.

Hazardous waste

Any substance designated by the department of ecology as a dangerous or extremely hazardous waste by chapter 173-303 WAC, Dangerous waste regulations.

Hazardous waste site

A hazardous waste site is any facility or location within the scope of this chapter.

Hazardous materials team (HAZMAT team)

A group of employees who are expected to perform responses to releases, or possible releases, of hazardous substances for the purpose of control and stabilization. As a result of their duties, HAZMAT team members may have close contact with hazardous substances.

Health hazard

A chemical, mixture, biological agent, or physical agent that may cause health effects in short- or long-term exposed employees based on statistically significant evidence from at least one study conducted using established scientific principles. Health hazards include:

• Carcinogens.

• Toxic or highly toxic agents.

• Reproductive toxins.

• Irritants.

• Corrosives.

• Sensitizers.

• Hepatotoxins (liver toxins).

• Nephrotoxins (kidney toxins).

• Neurotoxins (nervous system toxins).

• Substances that act on the hematopoietic system (blood or blood-forming system).

• Substances that can damage the lungs, skin, eyes, or mucous membranes.

• Hot or cold conditions.

IDLH or immediately dangerous to life or health

Any atmospheric condition that would:

• Cause an immediate threat to life;

OR

• Cause permanent or delayed adverse health effects;

OR

• Interfere with an employee's ability to escape.

Incidental release

A release that can be safely controlled at the time of the release and does not have the potential to become an uncontrolled release.

An example of a situation that results in an incidental release:

A tanker truck is receiving a load of hazardous liquid when a leak occurs. The driver knows the only hazard from the liquid is minor skin irritation. The employer has trained the driver on procedures and provided equipment to use for a release of this quantity. The driver puts on skin protection and stops the leak. A spill kit is used to contain, absorb, and pick up the spilled material for disposal.

Material safety data sheet (MSDS)

Written, printed, or electronic information (on paper, microfiche, or on-screen) that informs manufacturers, distributors, employers or employees about a hazardous chemical, its hazards and protective measures as required by chapter 296-839 WAC, Content and distribution of material safety data sheets (MSDSs) and label information.

Oxygen deficiency

An atmosphere where the percentage of oxygen by volume is less than 19.5%.

Permissible exposure limit (PEL)

Permissible exposure limits (PELs) are employee exposures to toxic substances or harmful physical agents that must not be exceeded. PELs are specified in applicable WISHA rules.

Published exposure level

Exposure limits published in "*National Institute for Occupational Safety and Health (NIOSH) Recommendations for Occupational Safety and Health*" (DHHS publication #92-100, 1992).

If an exposure limit is not published by NIOSH, then "published exposure level" means the exposure limits published by the American Conference of Governmental Industrial Hygienists (ACGIH) in "*TLVs and BEIs-Threshold Limit Values for Chemical Substances and Physical Agents*" (1999 edition).

Postemergency response

The stage of the emergency response where the immediate threat from the release has been stabilized or eliminated, and cleanup of the site has started. For more information, see the definition for "emergency response."

Site safety and health supervisor (or official)

The individual present at a hazardous waste site who is responsible to the employer and has the authority and knowledge necessary to establish the site-specific health and safety plan and verify compliance with applicable safety and health requirements.

Site work zones

Zones established at a hazardous waste site before cleanup work begins to control work on the site and access to the site. The work zones are: Exclusion zone, contamination reduction zone, and clean zone.

Uncontrolled hazardous waste site

An area where an accumulation of hazardous substances creates a threat to the health and safety of individuals or the environment or both. Examples include: Former municipal, county, or state landfills, locations where illegal or poorly managed waste disposal has taken place, or property of generators or former generators of hazardous substance waste (surface impoundments, landfills, dumps, and tank or drum farms).

Uncontrolled release

A release where significant safety and health risks could be created. Releases of hazardous substances that are either incidental or couldn't create a safety or health hazard (i.e., fire, explosion, or chemical exposure) aren't considered to be uncontrolled releases.

Examples of conditions that could create a significant safety and health risk:

• Large-quantity releases.

• Small releases that could be highly toxic.

• Potentially contaminated individuals arriving at hospitals.

• Airborne exposures that could exceed a WISHA permissible exposure limit or a published exposure limit and employees aren't adequately trained or equipped to control the release.

Example of an uncontrolled release:

A forklift driver knocks over a container of a solvent-based liquid, releasing the contents onto the warehouse floor. The driver has been trained to recognize the vapor is flammable and moderately toxic when inhaled. The driver hasn't been trained or provided appropriate equipment to address this type of spill. In this situation, it isn't safe for the driver to attempt a response. The driver needs to notify someone of the release so an emergency response can be initiated.

[Statutory Authority: RCW 49.17.010, 49.17.040, 49.17.050, and 49.17.060. 04-02-053, § 296-843-300, filed 1/5/04, effective 5/1/04.]

Chapter 296-848 WAC
ARSENIC

WAC

296-848-100	Scope.
296-848-200	Basic rules.
296-848-20010	Preventive practices.
296-848-20025	Washing facilities.
296-848-20060	Exposure evaluations.
296-848-20070	Notification.
296-848-20090	Exposure records.
296-848-300	Training, exposure monitoring, and medical monitoring.
296-848-30005	Training.
296-848-30010	Periodic exposure evaluations.
296-848-30030	Medical evaluations.
296-848-30080	Medical records.
296-848-400	Exposure control areas.
296-848-40005	Exposure control plan.
296-848-40020	Exposure controls.
296-848-40025	Exposure control areas.
296-848-40030	Clean-up facilities and lunchrooms.
296-848-40040	Personal protective equipment (PPE).
296-848-40045	Respirators.
296-848-500	Definitions.

WAC 296-848-100 Scope. This chapter applies to all occupational exposure to inorganic arsenic.

Definitions:

Inorganic arsenic means elemental arsenic (As), copper aceto-arsenite, and inorganic compounds containing arsenic (measured as As), except arsine. Inorganic compounds do not contain the element carbon.

Exposure is the contact an employee has with inorganic arsenic, whether or not protection is provided by respirators or other personal protective equipment (PPE). Exposure can occur through various routes of entry such as inhalation, ingestion, skin contact, or skin absorption.

Helpful tool:

Arsenic contamination in soil; information and guidance for employers.

Use this tool if you have employees who work with soil. It will help you find out if this rule is applicable to your employee's exposure to soil.

Exemptions:
- This chapter does not apply to any of the following:
  - Exposures during agricultural operations.
  - Pesticide applications, including the treatment of wood with preservatives.
  - Use of wood treated with inorganic arsenic.
  - Arsine, a gas identified by Chemical Abstract Service (CAS) Registry No. 7784-42-1.
  - Laboratories subject to the requirements found in another chapter:
- Go to the General occupational health standards, chapter 296-62 WAC;

AND

- Find the section, Hazardous chemicals in laboratories, WAC 296-62-400.
  - Inorganic arsenic present in a form and handled in such a way that airborne exposures could not occur. For example, inorganic arsenic present in glass is fused in the material. Due to the fused form, airborne exposure can not occur when the glass is scored and subsequently broken.

All requirements in this chapter will not apply to every workplace with an occupational exposure. The following steps will show you which requirements apply to your workplace.

Step 1: Follow requirements in the basic rules sections, WAC 296-848-20010 through 296-848-20090.

• This includes completing an exposure evaluation, as specified in Exposure evaluations, WAC 296-848-20060, to:

– Obtain employee eight-hour exposure monitoring results of airborne inorganic arsenic;

AND

– Determine if employee exposure monitoring results are above, at, or below these values:

■ Eight-hour time-weighted average (TWA_8). . . . . 10 micrograms per cubic meter ($\mu g/m^3$).

■ Eight-hour action level (AL). . . . . 5 $\mu g/m^3$.

Step 2: Use employee exposure monitoring results from Step 1 and follow Table 1 to find out which additional sections of this chapter apply to your workplace.

Table 1
Sections That Apply To Your Workplace

If:	Then continue to follow the Basic Rules, and these additional requirements:
• Employee exposure monitoring results are above the TWA_8	• Training, exposure monitoring, and medical monitoring, WAC 296-848-30005 through 296-848-30080; **AND**
	• Exposure control areas, WAC 296-848-40005 through 296-848-40045.
• Employee exposure monitoring results are: – At or below the TWA_8; **AND** – At or above AL	• Training, exposure monitoring, and medical monitoring, WAC 296-848-30005 through 296-848-30080.
• Employee exposure monitoring results are below the AL; **AND** • Eye or skin irritation from exposure to inorganic arsenic cannot occur	• No additional requirements apply if exposures remain stable.
• Employees could experience eye or skin irritation from exposure to inorganic arsenic	• Training in WAC 296-848-30005. • Washing, showering, and changing in WAC 296-848-40030. • Personal protective equipment (PPE) in WAC 296-848-40040.

[Statutory Authority: RCW 49.17.010, 49.17.040, 49.17.050, 49.17.060. 05-01-173, § 296-848-100, filed 12/21/04, effective 5/1/05.]

WAC 296-848-200 Basic rules.

Summary:

Your responsibility:

To measure and minimize employee exposure to inorganic arsenic.

IMPORTANT:

The sections listed in basic rules apply to all employers covered by the scope of this chapter, WAC 296-848-100. To find additional sections that may apply to you, go to the Scope, WAC 296-848-100, and follow Table 1.

Contents

Preventive practices
WAC 296-848-20010.
Washing facilities
WAC 296-848-20025.
Exposure evaluations
WAC 296-848-20060.
Notification
WAC 296-848-20070.
Exposure records
WAC 296-848-20090.

[Statutory Authority: RCW 49.17.010, 49.17.040, 49.17.050, 49.17.060. 05-01-173, § 296-848-200, filed 12/21/04, effective 5/1/05.]

WAC 296-848-20010 Preventive practices.

You must:

(1) Effectively communicate the hazards of inorganic arsenic by doing both of the following:

• Keep container labels free of statements that contradict or detract from the labels' hazard warning.

Note: You may use labels required by other laws, rules, or ordinances in addition to, or in combination with, labels required by this section.

You must:

• Make sure shipping containers, storage containers, and products containing inorganic arsenic are labeled, tagged, or marked with this warning:

Danger Contains Inorganic Arsenic Cancer Hazard Harmful if Inhaled or Swallowed Use Only with Adequate Ventilation or Respiratory Protection

Note:
- You should keep containers tightly covered when not in use to help prevent unnecessary exposure and accidental spills.
- Contaminated items should be handled and disposed of to prevent further exposure in the workplace. For example, vacuuming or wet wiping contaminated equipment helps prevent the release of dust into the air.

Reference:
- Additional requirements are found in other chapters:
  – For spills, leaks, or other releases, go to Emergency response, chapter 296-824 WAC.
  – For labeling go to:
- The Safety and health core rules, chapter 296-800 WAC, and find the section, Label containers holding hazardous chemicals, WAC 296-800-17025;

AND

- Material safety data sheet and label preparation, chapter 296-839 WAC.

You must:

(2) Establish safe and effective housekeeping and maintenance practices by doing all the following:

• Develop and keep a written housekeeping and maintenance plan that lists appropriate frequencies for:

– Housekeeping operations;

AND

– Cleaning and maintaining dust collection equipment.

• Keep surfaces free of accumulations of inorganic arsenic, to the degree feasible.

• When cleaning floors and other accessible surfaces:

– Use vacuuming or other cleaning methods that minimize the release of inorganic arsenic into the air.

– Do not use compressed air.

– Select vacuums that have high efficiency particulate air (HEPA) filters.

– Use and empty vacuums in a way that minimizes the release of inorganic arsenic back into the workplace.

Note:
- Shoveling or brushing may be used only when vacuuming or other cleaning methods have not been effective.
- Using non-HEPA vacuums will increase inorganic arsenic contamination in air and on area surfaces.

You must:

• Maintain ventilation systems, including dust collection equipment, to make sure they are effective. Do all of the following:

– Perform periodic inspections for effectiveness.

– Periodically clean the equipment.

– Keep a note of the most recent inspection for effectiveness, and cleaning or maintenance.

(3) Prevent eye or skin contact with:

• Arsenic trichloride;

AND

• Liquid or particulate forms of inorganic arsenic when contact could cause eye or skin irritation.

Note: Arsenic trichloride is corrosive and can be quickly absorbed through skin.

[Statutory Authority: RCW 49.17.010, 49.17.040, 49.17.050, 49.17.060. 05-01-173, § 296-848-20010, filed 12/21/04, effective 5/1/05.]

WAC 296-848-20025 Washing facilities.

You must:

• Provide washing facilities for employees exposed to inorganic arsenic.

References: For additional washing facility requirements, go to another chapter, the Safety and health core rules, chapter 296-800 WAC, and find the section titled, Provide convenient and clean washing facilities, WAC 296-800-23025.

[Statutory Authority: RCW 49.17.010, 49.17.040, 49.17.050, 49.17.060. 05-01-173, § 296-848-20025, filed 12/21/04, effective 5/1/05.]

WAC 296-848-20060 Exposure evaluations.

IMPORTANT:

• This section applies when workplace operations create potential airborne exposure to inorganic arsenic.

• When you conduct an exposure evaluation in a workplace where an employee uses a respirator, the protection provided by the respirator is not considered.

• Following this section will fulfill the requirements to identify and evaluate respiratory hazards found in another chapter, Respiratory hazards, chapter 296-841 WAC.

You must:

(1) Conduct an employee exposure evaluation to accurately determine airborne concentrations of inorganic arsenic by completing Steps 1 through 5 of the Exposure Evaluation Process, each time any of the following apply:

• No evaluation has been conducted.

• Changes have occurred in any of the following areas that may result in new or increased exposures:

– Production.

– Processes.

– Exposure controls such as ventilation systems or work practices.

– Personnel.

• You have any reason to suspect new or increased exposure may occur.

(2) Provide affected employees and their designated representatives an opportunity to observe exposure monitoring during Step 4 of the Exposure Evaluation Process.

• Make sure observers do not interfere with exposure measurements.

• Make sure observers are entitled to:

– An explanation of your exposure measurement and monitoring procedures;

– Observe all tasks of exposure measurement performed at the workplace;

AND

– Receive a copy of the exposure measurement results when you obtain them; or are allowed to record the exposure measurement results, if made during observations.

• Make sure observers who enter areas with inorganic arsenic exposure:

– Are provided with and use the same protective clothing, respirators, and other personal protective equipment (PPE) that employees working in the area are required to use;

AND

– Follow safety and health requirements that apply.

Exposure Evaluation Process

IMPORTANT:

Following the Exposure Evaluation Process is not necessary when you have documentation conclusively demonstrating inorganic arsenic exposures for a particular operation and material, cannot exceed the action level (AL) during any conditions reasonably anticipated. Documentation can be based on quantitative information such as soil test results OR qualitative information such as observations of how inorganic arsenic-containing materials are handled.

– Retain this documentation for as long as you rely on it.

Step 1: Identify all employees who have potential airborne exposure to inorganic arsenic in your workplace.

Step 2: Select employees from those identified in Step 1 who will have their eight-hour exposures monitored.

• Make sure the exposures of the employees selected represent eight-hour exposures for all employees identified in Step 1, including each job classification, work area, and shift.

Note:
- A written description of the procedure used for obtaining representative employee exposure monitoring results needs to be kept as part of your exposure records required by this chapter in Exposure records, WAC 296-848-20090. This description can be created while completing Steps 2 through 4 of this exposure evaluation process.

Step 3: Determine how you'll obtain employee exposure monitoring results.

• Select and use a method that meets the following criteria for accuracy:

– ±25%, with a confidence level of 95%, when concentrations are potentially at or above an eight-hour time-weighted average of 10 micrograms per cubic meter ($\mu g/m^3$);

OR

– ±35%, with a confidence level of 95%, when concentrations are potentially between the eight-hour time-weighted averages of 5 $\mu g/m^3$ and 10 $\mu g/m^3$.

Note:
- Here are examples of methods that meet this accuracy requirement:
  - OSHA Method ID105 found by going to http://www.osha.gov/dts/sltc/methods/toc.html.
  - NIOSH method 7901 found by going to http://www.cdc.gov/niosh/homepage.html and linking to the NIOSH Manual of Analytical Methods.

Step 4: Obtain employee exposure monitoring results by collecting air samples representing employees identified in Step 1.

• Sample at least one shift representative of the eight-hour exposure, for each employee selected in Step 2.

• Make sure samples are collected from each selected employee's breathing zone.

Note:
- You may use any sampling method that meets the accuracies specified in Step 3. Examples of these methods include:
  - Real-time monitors that provide immediate exposure monitoring results.
  - Equipment that collects samples that are sent to a laboratory for analysis.
- The following are examples of methods for collecting samples representative of eight-hour exposures.
  - Collect one or more continuous samples, for example, a single eight-hour sample or four two-hour samples.
  - Take a minimum of 4 to 7 brief samples, such as fifteen-minute samples, during the work shift and at times selected randomly.
- For work shifts longer than eight hours, monitor the continuous eight-hour portion of the shift expected to have the highest average exposure concentration.

Step 5: Have the samples you collected analyzed to obtain monitoring results representing eight-hour exposures.

• Go to the Scope of this chapter, WAC 296-848-100, and compare employee exposure monitoring results to the values found in Step 1 and follow Step 2 to determine if additional sections of this chapter apply.

Note:
- You may contact your local WISHA consultant for help:
  - Interpreting data or other information.
  - Determining eight-hour employee exposure monitoring results.
- To contact a WISHA consultant:
  - Go to the Safety and health core rules, chapter 296-800 WAC;

  AND
  - Find the Resources section, and under "Other Resources," find *Service Locations for Labor and Industries*.

[Statutory Authority: RCW 49.17.010, 49.17.040, 49.17.050, 49.17.060. 05-01-173, § 296-848-20060, filed 12/21/04, effective 5/1/05.]

WAC 296-848-20070 Notification.

You must:

• Provide written notification of exposure monitoring results, including notification about whether exposures exceed the permissible exposure limit (PEL), to employees represented by your exposure evaluation, within five business days after the monitoring results become known to you.

– In addition, when employee exposure monitoring results are above the permissible exposure limit (PEL), provide written notification of all the following within fifteen business days after these exposure monitoring results become known to you.

■ Corrective actions being taken and a schedule for completion;

AND

■ Any reason why exposures cannot be lowered to below the PEL.

Note:
- You can notify affected employees either individually or post the notifications in areas readily accessible to affected employees.
- When notifying employees about corrective actions, your notification may refer them to a separate document that is available and provides the required information.

[Statutory Authority: RCW 49.17.010, 49.17.040, 49.17.050, 49.17.060. 05-01-173, § 296-848-20070, filed 12/21/04, effective 5/1/05.]

WAC 296-848-20090 Exposure records.

You must:

• Establish and keep complete and accurate records for all exposure monitoring conducted under this chapter. Make sure the record includes, at least:

– The name, Social Security number or other unique identifier, and job classification of the employee sampled and all other employees represented by the sampled employee.

– A description of the methods used to obtain exposure monitoring results and evidence of the method's accuracy.

– A description of the procedure used to obtain representative employee exposure monitoring results.

– The date, number, duration, location, and the result of each sample taken.

– Any environmental conditions that could affect exposure concentration measurements.

Note: It's useful to record any personal protective equipment worn by the employee in addition to the type of respirator worn.

You must:

• Keep exposure monitoring records for at least thirty years.

Reference:
- To see additional requirements for employee exposure records including access and transfer requirements, go to another chapter, Employee medical and exposure records, chapter 296-802 WAC.
- Exposure monitoring records need to be kept longer than thirty years for employees participating in medical monitoring. Go to Medical records, WAC 296-848-30080, found within this chapter.

[Statutory Authority: RCW 49.17.010, 49.17.040, 49.17.050, 49.17.060. 05-01-173, § 296-848-20090, filed 12/21/04, effective 5/1/05.]

WAC 296-848-300 Training, exposure monitoring, and medical monitoring.

Summary:

Your responsibility:

To detect any significant changes in employee health and exposure monitoring results.

IMPORTANT:

• These sections apply when skin or eye irritation could occur or when employee exposure monitoring results are either:

– At or above the action level (AL) of 5 micrograms per cubic meter (μg/m^3) for inorganic arsenic;

OR

– Above the permissible exposure limit (PEL) of 10 μg/m^3 for inorganic arsenic.

Contents

Training
WAC 296-848-30005.
Periodic exposure evaluations
WAC 296-848-30010.
Medical evaluations
WAC 296-848-30030.
Medical records
WAC 296-848-30080.

[Statutory Authority: RCW 49.17.010, 49.17.040, 49.17.050, 49.17.060. 05-01-173, § 296-848-300, filed 12/21/04, effective 5/1/05.]

WAC 296-848-30005 Training.

You must:

• Train employees:

– Who are exposed above the action level (AL) of 5 micrograms per cubic meter (μg/m^3) of air;

OR

– Who could experience eye or skin irritation from exposure.

• Provide training:

– At the time of initial assignment;

AND

– At least every twelve months after initial training.

• Make sure training and information includes all of the following:

– A review of this chapter.

– The information found in another chapter:

■ Go to the General occupational health standards, chapter 296-62 WAC;

AND

■ Find Appendix A-Inorganic Arsenic Substance Information Sheet, WAC 296-62-07354(1).

– The purpose for medical evaluations and a description of how you are fulfilling the medical evaluation requirements of this chapter found in Medical evaluations, WAC 296-848-30030.

• Make a copy of each of the following readily available to all employees required to be trained under this section:

– This chapter;

AND

– These appendices found in another chapter, the General occupational health standards, chapter 296-62 WAC:

■ Appendix A-Inorganic Arsenic Substance Information Sheet, WAC 296-62-07354(1).

■ Appendix B-Substance Technical Guidelines, WAC 296-62-07354(2).

■ Appendix C-Medical Surveillance Guidelines, WAC 296-62-07354(3).

Reference:
- To see additional training and information requirements in other chapters, go to the:
  - Respirators rule, chapter 296-842 WAC.
  - Safety and health core rules, chapter 296-800 WAC, and find the section titled, Inform and train your employees about hazardous chemicals in your workplace, WAC 296-800-17030.
- When following these requirements, include specific information about potential exposures to inorganic arsenic, such as the types of operations, locations, quantities, exposure sources, exposure controls, inorganic arsenic use, and storage.

[Statutory Authority: RCW 49.17.010, 49.17.040, 49.17.050, 49.17.060. 05-01-173, § 296-848-30005, filed 12/21/04, effective 5/1/05.]

WAC 296-848-30010 Periodic exposure evaluations.

Exemption:
- Periodic exposure evaluations aren't required if exposure monitoring results conducted to fulfill requirements in Exposure evaluation, WAC 296-848-20060, are below the action level (AL).

You must:

• Obtain employee exposure monitoring results as specified in Table 2 by repeating Steps 2, 4, and 5 of the Exposure Evaluation Process found within this chapter, in Exposure evaluations, WAC 296-848-20060.

Note: If you document that one work shift consistently has higher exposure monitoring results than another for a particular operation, then you limit sample collection to the work shift with higher exposures and can use results to represent all employees performing the operation on other shifts.

Table 2
Periodic Exposure Evaluation Frequencies

If 8-hour employee exposure monitoring results:	Then:
Are between the: – Action level (AL) of 5 micrograms per cubic meter (μg/m³); **AND** – Permissible exposure limit (PEL) of 10 μg/m³	Conduct additional exposure evaluations at least every six months for the employees represented by the monitoring results.
Are above the PEL	Conduct additional exposure evaluations at least every three months for the employees represented by the monitoring results.
For employees previously above the PEL, have decreased: – To a concentration between the PEL and AL; **AND** – The decrease is demonstrated by two consecutive exposure evaluations made at least seven days apart	You may decrease your evaluation frequency to every six months for the employees represented by the monitoring results.
Have decreased to below the AL; **AND** The decrease is demonstrated by two consecutive exposure evaluations made at least seven days apart	You may stop periodic employee exposure evaluations for employees represented by the monitoring results.

[Statutory Authority: RCW 49.17.010, 49.17.040, 49.17.050, 49.17.060. 05-01-173, § 296-848-30010, filed 12/21/04, effective 5/1/05.]

WAC 296-848-30030 Medical evaluations.

IMPORTANT:

• Medical evaluations conducted under this section will satisfy the medical evaluation requirement found in another chapter, Respirators, chapter 296-842 WAC.

You must:

• Make medical evaluations available to current employees who have been, are, or will be exposed to inorganic arsenic concentrations above the AL:

– At least thirty days in any twelve-month period;

OR

– A total of ten years or more of combined employment with you or previous employers with at least thirty days of exposure per year.

• Make medical evaluations available at no cost to employees.

– Pay all costs, including travel costs and wages associated with any time spent outside of the employee's normal work hours.

• Make medical evaluations available at reasonable times and places.

• Make medical evaluations available by completing Steps 1 through 6 of the Medical Evaluation Process for each employee covered.

Note:
- Employees who wear respirators need to be medically evaluated to make sure the respirator will not harm them, before they are assigned work in areas requiring respirators. Employees who decline to receive medical examination and testing to monitor for health effects caused by inorganic arsenic are not excluded from receiving a separate medical evaluation for a respirator use.
- If employers discourage participation in medical monitoring for health effects caused by inorganic arsenic, or in any way interfere with an employee's decision to continue with this program, this interference may represent unlawful discrimination under RCW 49.17.160, Discrimination against employee filing, instituting proceeding, or testifying prohibited—Procedure—Remedy.

Helpful tool:

Declination form for nonemergency related medical evaluations.

You may use this optional form to document employee decisions to decline participation in the medical evaluation process for exposure to inorganic arsenic. To see this form, go to the Resources section within this chapter.

Medical Evaluation Process

Step 1: Identify employees who qualify, as stated above, for medical evaluations.

Step 2a: Make medical evaluations available for employees identified in Step 1 at the following times:

• Initially, when employees are assigned to work in an area where exposure monitoring results are, or will likely be, above the action level for at least thirty days in a twelve-month period.

• Periodically as specified in Table 3.

• When employment with exposure ends, if the employee has not had an evaluation within the six-month period before exposure ends. Include in these evaluations the same content as specified in Table 4 for initial evaluations, excluding a chest X ray.

Table 3
Frequencies for Periodic Medical Evaluations

For:	Provide periodic medical evaluations every:
Employees less than forty-five years old with less than ten years of exposure above the AL	Twelve months;
Employees forty-five or older; **AND** Employees with more than ten years of exposure above the AL	Six months; **AND** Twelve months to obtain a fourteen by seventeen-inch posterior-anterior chest X ray for monitoring purposes, unless the LHCP has determined a different frequency for periodic X rays.

Step 2b: Provide appropriate medical examination and emergency treatment when an employee identified in Step 1 develops signs or symptoms commonly associated with inorganic arsenic exposure.

Step 3: Select a licensed health care professional (LHCP) who will conduct or supervise examinations and procedures.

Step 4: Make sure the LHCP receives all of the following before the medical evaluation is performed:

• A copy of:

– This chapter;

AND

– The following information found in the General occupational health standards, chapter 296-62 WAC:

■ Appendix A-Inorganic Arsenic Substance Information Sheet, WAC 296-62-07354(1).

■ Appendix B-Substance Technical Guidelines, WAC 296-62-07354(2).

■ Appendix C-Medical Surveillance Guidelines, WAC 296-62-07354(3).

• A description of the duties of the employee being evaluated and how these duties relate to inorganic arsenic exposure.

• The anticipated or representative exposure monitoring results for the employee being evaluated.

• A description of the personal protective equipment (PPE) each employee being evaluated uses or will use.

• Information from previous employment-related examinations when this information is not available to the examining LHCP.

• Instructions that the written opinions the LHCP provides you be limited to the following information:

– Results from examinations and tests.

– The LHCP's opinion about whether or not medical conditions were found that would increase the employee's risk for impairment from exposure to inorganic arsenic.

– Any recommended limitations for:

■ Inorganic arsenic exposure;

AND

■ Use of respirators or other PPE.

– A statement that the employee has been informed of medical results and medical conditions caused by inorganic arsenic exposure requiring further examination or treatment.

Step 5: Make the medical evaluation available to the employee. Make sure it includes the content listed in Table 4, Content of Medical Evaluations.

Step 6: Obtain the LHCP's written opinion for the employee's medical evaluation and give a copy to the employee.

• Make sure the written opinion is limited to the information specified for written opinions in Step 4.

Note: If the written opinion contains specific findings or diagnoses unrelated to occupational exposure, send it back and obtain a revised version without the additional information.

Table 4
Content of Medical Evaluations

When conducting:	Include:
An initial evaluation	• A work history and medical history including: – Smoking history. – The presence and degree of respiratory symptoms such as breathlessness, cough, sputum production, and wheezing. • A physical examination that includes: – A fourteen by seventeen-inch posterior-anterior chest X ray and the International Labor Office UICC/Cincinnati (ILO U/C) rating. – A nasal and skin examination. • Additional examinations the licensed healthcare professional (LHCP) believes appropriate based on the employee's exposure to inorganic arsenic or respirator use.
Periodic evaluations for employees less than forty-five years old with less than ten years of exposure above the action level (AL)	• The same content as specified for initial evaluations repeated every twelve months.
Periodic evaluations for employees: • Forty-five or older; **OR** • With more than ten years of exposure above the AL	• The following content repeated every six months: – A work history and medical history including: ■ Smoking history. ■ The presence and degree of respiratory symptoms such as breathlessness, cough, sputum production, and wheezing. – A physical examination that includes a nasal and skin examination. – Additional examinations the LHCP believes appropriate based on the employee's exposure to inorganic arsenic or respirator use. • A physical examination, repeated every twelve months, that obtains a fourteen by seventeen-inch posterior-anterior chest X ray and the International Labor Office UICC/Cincinnati (ILO U/C) rating.

[Statutory Authority: RCW 49.17.010, 49.17.040, 49.17.050, 49.17.060. 05-01-173, § 296-848-30030, filed 12/21/04, effective 5/1/05.]

WAC 296-848-30080 Medical records.

IMPORTANT:

• This section applies when a medical evaluation is performed, or any time a medical record is created for an employee exposed to inorganic arsenic.

You must:

• Establish and maintain complete and accurate medical records for each employee receiving a medical evaluation and make sure the records include all the following:

– The employee's name and Social Security number, or other unique identifier.

– A description of the employee's duties.

– A copy of the licensed health care professional's (LHCP's) written opinions.

– The anticipated or representative employee exposure monitoring results provided to the LHCP for the employee.

• Maintain medical evaluation records for the duration of employment plus thirty years.

Note: • Your medical provider may keep these records for you. Other medical records, such as the employee's medical history or X ray, need to be kept as a confidential record by the medical provider and accessed only with the employee's consent.

Reference: • To see additional requirements for employee medical record, including access and transfer requirements, go to Employee medical and exposure records, chapter 296-802 WAC.

[Statutory Authority: RCW 49.17.010, 49.17.040, 49.17.050, 49.17.060. 05-01-173, § 296-848-30080, filed 12/21/04, effective 5/1/05.]

WAC 296-848-400 Exposure control areas.

Summary:

Your responsibility:

To protect employees from exposure to inorganic arsenic by using feasible exposure controls and appropriate respirators.

IMPORTANT:

These sections apply when employee exposure monitoring results are above the permissible exposure limit (PEL) of 10 micrograms per cubic meter ($\mu g/m^3$) of air.

Contents

Exposure control plan
WAC 296-848-40005.
Exposure controls
WAC 296-848-40020.
Exposure control areas
WAC 296-848-40025.
Clean-up facilities and lunchrooms
WAC 296-848-40030.
Personal protective equipment
WAC 296-848-40040.
Respirators
WAC 296-848-40045.

[Statutory Authority: RCW 49.17.010, 49.17.040, 49.17.050, 49.17.060. 05-01-173, § 296-848-400, filed 12/21/04, effective 5/1/05.]

WAC 296-848-40005 Exposure control plan.

IMPORTANT:

Use of employee rotation to control exposures is not advisable since inorganic arsenic is a known carcinogen.

You must:

• Establish and implement a complete written exposure control plan that includes at least the following, for exposure control areas:

– A description of each operation releasing inorganic arsenic, for example:

■ Crew size.

■ Current exposure controls.

■ Materials processed.

■ Machinery used.

■ Operating procedures.

■ Maintenance practices.

– Exposure evaluation data.

– A report of the technology considered for exposure controls.

– Engineering plans and studies used as a basis for selecting exposure controls.

– A detailed schedule for implementing:

■ Feasible exposure controls, if immediate implementation is not possible.

■ Changes to enhance current exposure controls, when necessary.

– An analysis of the effectiveness of the exposure controls considered, when controls will not reduce exposures to or below the permissible exposure limit (PEL).

– Other relevant information.

• Review and update your exposure control plan at least every six months to keep it current.

• Implement exposure controls on the quickest schedule feasible if controls will not reduce exposure to or below the PEL.

• Provide a copy of your exposure control plan to affected employees and their designated representatives, when they ask to review or copy it.

[Statutory Authority: RCW 49.17.010, 49.17.040, 49.17.050, 49.17.060. 05-01-173, § 296-848-40005, filed 12/21/04, effective 5/1/05.]

WAC 296-848-40020 Exposure controls.

IMPORTANT:

• Use of employee rotation to control exposures is not advisable since inorganic arsenic is a known carcinogen.

• Respirators and other personal protective equipment (PPE) do not substitute for feasible exposure controls.

You must:

• Use feasible exposure controls to reduce exposures to or below the permissible exposure limit (PEL), or as low as achievable.

Reference: To see examples of exposure controls go to Respiratory hazards, chapter 296-841 WAC, and find Table 1 in the section, Control employee exposure, WAC 296-848-20010.

[Statutory Authority: RCW 49.17.010, 49.17.040, 49.17.050, 49.17.060. 05-01-173, § 296-848-40020, filed 12/21/04, effective 5/1/05.]

WAC 296-848-40025 Exposure control areas.

You must:

• Establish temporary or permanent exposure control areas where airborne concentrations of inorganic arsenic are above the permissible exposure limit (PEL) by doing all the following:

– Distinguish the boundaries of exposure control areas from the rest of the workplace in any way that minimizes employee access.

– Allow only authorized personnel to enter exposure control areas.

– Post signs at access points to exposure control areas that include this warning:

DANGER Inorganic Arsenic Cancer Hazard Authorized Personnel Only No Smoking or Eating Respirator Required

– Make sure signs are kept clean and well lit so they are easy to read.

– Keep signs and areas near them free of statements that contradict or detract from their message.

Note: This requirement does not prevent you from posting signs required by other laws, rules, or ordinances.

You must:

– Make sure employees entering exposure control areas have an appropriate respirator.

– Prevent all of the following activities from occurring in exposure control areas unless they are conducted in required lunchrooms, change rooms, or showers:

■ Eating food or drinking beverages.

■ Smoking.

■ Chewing tobacco or gum.

■ Applying cosmetics.

Note:
- You may use permanent or temporary enclosures, caution tape, ropes, painted lines on surfaces, or other materials to visibly distinguish exposure control areas or separate them from the rest of the workplace.
- When distinguishing exposure control areas, you should consider factors such as:
  - The level and duration of airborne exposure.
  - Whether the area is permanent or temporary.
  - The number of employees in adjacent areas.

Reference: To see other requirements for respirators within this chapter, go to Respirators, WAC 296-848-40045.

[Statutory Authority: RCW 49.17.010, 49.17.040, 49.17.050, 49.17.060. 05-01-173, § 296-848-40025, filed 12/21/04, effective 5/1/05.]

WAC 296-848-40030 Clean-up facilities and lunchrooms.

You must:

• Provide the following facilities for employees who could experience eye or skin irritation from exposure to inorganic arsenic or who work in exposure control areas:

– Clean change rooms with separate storage for street clothes and personal protective equipment (PPE).

– Shower facilities.

• Make sure employees who could experience eye or skin irritation from exposure to inorganic arsenic or who work in exposure control areas:

– Shower at the end of the work shift;

AND

– Wash their hands and face before eating.

• Provide lunchrooms for employees working in exposure control areas that are:

– Located so they are readily accessible to the employees.

– Temperature controlled.

– Under positive pressure compared to surrounding areas.

– Provided with a filtered air supply.

Note: Lunchrooms may be located within exposure control areas, but are considered separate from the exposure control area.

• Do the following when exposures in exposure control areas exceed an eight-hour time-weighted average of 100 micrograms of arsenic per cubic meter of air ($\mu g/m^3$):

– Provide facilities for employees working in exposure control areas where they can remove excess contamination from protective clothing and shoes.

– Make sure employees vacuum protective clothing and clean or change shoes before entering showers, change rooms, or lunchrooms.

Reference: To see additional requirements for hygiene facilities:
- Go to the Safety and health core rules, chapter 296-800 WAC.
- Find Drinking water, bathrooms, washing facilities, and waste disposal, WAC 296-800-230.

[Statutory Authority: RCW 49.17.010, 49.17.040, 49.17.050, 49.17.060. 05-01-173, § 296-848-40030, filed 12/21/04, effective 5/1/05.]

WAC 296-848-40040 Personal protective equipment (PPE).

You must:

• Provide, make sure employees use, and maintain PPE as follows:

– Provide clean and dry protective clothing to employees who could experience eye or skin irritation from exposure to inorganic arsenic or who work in exposure control areas.

– Provide impervious protective clothing to employees exposed to arsenic trichloride.

Note:
- Arsenic trichloride is corrosive and can be rapidly absorbed through skin.
- Examples of protective clothing appropriate for inorganic arsenic exposures include:
  - Coveralls or similar full-body work clothing.
  - Gloves, and shoes or coverlets.
  - Face shields or vented goggles when necessary to prevent eye irritation.

You must:

– Make sure employees do not remove inorganic arsenic from PPE by blowing or shaking.

– Make sure protective clothing is removed:

■ In change rooms;

AND

■ At the end of the work shift.

– Make sure contaminated protective clothing that will be cleaned, laundered, or disposed of, is placed in a closed container located in the change room.

■ Make sure the container prevents the release of inorganic arsenic.

– Launder protective clothing:

■ At least weekly if employees work in areas where exposure monitoring results of inorganic arsenic are below an eight-hour time-weighted average concentration of 100 micrograms per cubic meter ($\mu g/m^3$);

OR

■ Daily if employees work in areas where either exposure monitoring results of inorganic arsenic are above an eight-hour time-weighted average concentration of 100 $\mu g/m^3$ or when more frequent washing is needed to prevent skin irritation.

– Maintain the effectiveness of PPE by repairing or replacing it, as needed:

■ Dispose of protective clothing if it will not be repaired.

• Inform individuals who clean or launder protective clothing about the possible health effects associated with inorganic arsenic, including carcinogenic effects, by doing the following:

– Provide the information in writing;

AND

– Label containers of contaminated PPE with the following warning:

CAUTION:
Clothing contaminated with inorganic arsenic Do not remove dust by blowing or shaking Dispose of inorganic arsenic contaminated wash water as applicable local, state, or federal regulations require

Reference: To see additional Personal protective equipment requirements go to the Safety and health core rules, chapter 296-800 WAC, and find the section titled, PPE, WAC 296-800-160.

[Statutory Authority: RCW 49.17.010, 49.17.040, 49.17.050, 49.17.060. 05-01-173, § 296-848-40040, filed 12/21/04, effective 5/1/05.]

WAC 296-848-40045 Respirators.

IMPORTANT:

• The requirements in this section are in addition to the requirements found in other chapters:

– Respiratory hazards, chapter 296-841 WAC.

– Respirators, chapter 296-842 WAC.

You must:

• Provide respirators and require that employees use them in circumstances where exposure is above the permissible exposure limit (PEL), including any of the following circumstances:

– Employees are in an exposure control area.

– Feasible exposure controls are being put in place.

– Where you determine that exposure controls are not feasible.

– Feasible exposure controls do not reduce exposures to, or below, the PEL.

– Emergencies.

• Make sure air-purifying respirators selected have high-efficiency particulate air (HEPA) filters or N-, R-, or P-100 filters.

• Provide an employee a powered air-purifying respirator (PAPR) when this type of respirator will provide proper protection and:

– A licensed health care professional (LHCP) allows this type of respirator in their written opinion.

OR

– The employee chooses to use this type of respirator.

• Prohibit the use of half-facepiece respirators for protection against arsenic trichloride.

Note: Arsenic trichloride is corrosive and can be rapidly absorbed through skin.

[Statutory Authority: RCW 49.17.010, 49.17.040, 49.17.050, 49.17.060. 05-01-173, § 296-848-40045, filed 12/21/04, effective 5/1/05.]

WAC 296-848-500 Definitions.

Action level

An airborne concentration of inorganic arsenic of 5 micrograms per cubic meter ($\mu g/m^3$) of air calculated as an eight-hour time-weighted average.

Authorized personnel

Individuals specifically permitted by the employer to enter the exposure control area to perform duties, or to observe employee exposure evaluations as a designated representative.

Breathing zone

The space around and in front of an employee's nose and mouth, forming a hemisphere with a 6- to 9-inch radius.

CAS (Chemical Abstract Service) number

CAS numbers are internationally recognized and used on material safety data sheets (MSDSs) and other documents to identify substances. For more information see http://www.cas.org/about.

Day

Any part of a calendar day.

Designated representative

Any one of the following:

• Any individual or organization to which an employee gives written authorization.

• A recognized or certified collective bargaining agent without regard to written employee authorization.

• The legal representative of a deceased or legally incapacitated employee.

Emergency

Any event that could or does result in the unexpected significant release of inorganic arsenic. Examples of emergencies include equipment failure, container rupture, or control equipment failure.

Exposure

The contact an employee has with inorganic arsenic, whether or not protection is provided by respirators or other personal protective equipment (PPE). Exposure can occur through various routes of entry such as inhalation, ingestion, skin contact, or skin absorption.

Inorganic arsenic

Elemental arsenic (As), copper aceto-arsenite, and inorganic compounds containing arsenic (measured as As), except arsine. Inorganic compounds do not contain the element carbon.

Licensed health care professional (LHCP)

An individual whose legally permitted scope of practice allows him or her to provide some or all of the healthcare services required for medical evaluations.

Permissible exposure limits (PELs)

PELs are employee exposures to toxic substances or harmful physical agents that must not be exceeded. PELs are also specified in WISHA rules found in other chapters. The PEL for inorganic arsenic is an eight-hour time-weighted average (TWA_8) of 10 micrograms per cubic meter ($\mu g/m^3$).

Time-weighted average (TWA_8)

An exposure limit averaged over an eight-hour period that must not be exceeded during an employee's workday.

[Statutory Authority: RCW 49.17.010, 49.17.040, 49.17.050, 49.17.060. 05-01-173, § 296-848-500, filed 12/21/04, effective 5/1/05.]

Chapter 296-849 WAC
BENZENE

WAC

296-849-100	Scope.
296-849-110	Basic rules.
296-849-11010	Preventive practices.
296-849-11020	Exposure control areas.
296-849-11030	Exposure evaluations.
296-849-11040	Personal protective equipment (PPE).
296-849-11050	Training.
296-849-11065	Exposure monitoring observation.
296-849-11070	Notification.

296-849-11090 Exposure records.
296-849-120 Exposure and medical monitoring.
296-849-12010 Periodic exposure evaluations.
296-849-12030 Medical evaluations.
296-849-12050 Medical removal.
296-849-12080 Medical records.
296-849-130 Rules for exposure control areas.
296-849-13005 Exposure control plan.
296-849-13020 Exposure controls.
296-849-13045 Respirators.
296-849-190 Definitions.

WAC 296-849-100 Scope. This chapter applies to **all** occupational exposure to benzene.

Definition:

Exposure is the contact an employee has with benzene, whether or not protection is provided by respirators or other personal protective equipment (PPE). Exposure can occur through various routes of entry such as inhalation, ingestion, skin contact, or skin absorption.

Exemptions: This chapter does not apply to any of the following:

- Liquids, vapors, mixtures in containers or pipelines, and gas in natural gas processing plants when benzene content is 0.1% or less.
- Gasoline and other fuels containing benzene once they leave the final bulk wholesale facility and are being:
  - Transported;
  - Sold;
  - Distributed;
  - Stored;
  - Dispensed either:
    - Outdoors;

    OR
    - Indoors four hours or less a day.
  - Used as a fuel.
- Laboratories subject to the requirements in hazardous chemicals in laboratories, WAC 296-62-400, the General occupational health standards, chapter 296-62 WAC.
- Oil and gas drilling, production, and servicing operations.
- Solid materials that contain only trace amounts of benzene.
- Coke ovens.

All requirements in this chapter will not apply to every workplace with an occupational exposure. The following will show you which requirements apply to your workplace.

Step 1: If any of your work tasks are listed in Table 1, follow Table 1.

• Go to Step 2a if you have additional work tasks or other exposures that are not covered in Table 1.

Table 1
Requirements that Apply to Specific Tasks

If employees do any of the following:	Then the only requirements in this chapter that apply to those tasks are:
Load and unload benzene at bulk storage facilities that use vapor control systems for all loading and unloading operations.	• The labeling requirement found in Preventive practices, WAC 296-849-11010.
Perform tasks around sealed transport pipelines carrying gasoline, crude oil, or other liquids containing more than 0.1% benzene.	• This requirement found in Training, WAC 296-849-11050: – Make sure training and information includes specific information on benzene for each hazard communication training topic. For the list of hazard communication training tropics, go to the Safety and health core rules, chapter 296-800 WAC, and find Inform and train your employees about hazardous chemicals in your workplace, WAC 296-800-17030.
Work with, or around, sealed containers of liquids containing more than 0.1% benzene.	• Emergency requirements found in Medical evaluations, WAC 296-849-12030. • Requirements found in Medical records, WAC 296-849-12080. • Respirator requirements found in Respirators, WAC 296-849-13045.

Step 2a: Follow requirements in the basic rules sections, WAC 296-849-11010 through 296-849-11090, for tasks **not** listed in Table 1.

• This includes completing an exposure evaluation, as specified in Exposure evaluations, WAC 296-849-11060, to:

– Obtain employee fifteen-minute and eight-hour exposure monitoring results of airborne benzene;

AND

– Determine if employee exposure monitoring results are above, at, or below these values:

■ Eight-hour time-weighted average **(TWA_8)**. . . . . 1 parts per million (ppm).

■ Fifteen-minute short-term exposure limit **(STEL)**. . . . 5 ppm.

■ Eight-hour action level **(AL)**. . . . . 0.5 ppm.

Step 2b: Use employee exposure monitoring results from Step 2a and follow Table 2 to find out which additional sections of this chapter to your workplace.

Table 2
Section Application

If employee exposure monitoring results are:	Then continue to follow the basic rules, and these additional requirements:
• **Above** the TWA_8 or STEL	• Exposure and medical monitoring, WAC 296-849-12005 through 296-849-12080; **AND**

	• Exposure control areas, WAC 296-849-13005 through 296-849-13045.
• **At or below** the TWA_8 or STEL; **AND** • **At or above** AL	• Exposure and medical monitoring, WAC 296-849-12005 through 296-849-12080.
• **Below** the AL and STEL	• No additional requirements apply.

[Statutory Authority: RCW 49.17.010, 49.17.040, 49.17.050, 49.17.060. 05-01-172, § 296-849-100, filed 12/21/04, effective 3/1/05.]

WAC 296-849-110 Basic rules.

Summary:

Your responsibility:

To measure and minimize employee exposure to benzene.

IMPORTANT:

To determine which requirements to follow for your work tasks, go to Table 1 in the scope of this chapter, WAC 296-849-100.

Contents:

Preventive practices
WAC 296-849-11010.
Exposure control areas
WAC 296-849-11020.
Exposure evaluations
WAC 296-849-11030.
Personal protective equipment (PPE)
WAC 296-849-11040.
Training
WAC 296-849-11050.
Exposure monitoring observation
WAC 296-849-11065.
Notification
WAC 296-849-11070.
Exposure records
WAC 296-849-11090.

[Statutory Authority: RCW 49.17.010, 49.17.040, 49.17.050, 49.17.060. 05-01-172, § 296-849-110, filed 12/21/04, effective 3/1/05.]

WAC 296-849-11010 Preventive practices.

You must:

• Make sure containers of benzene in the workplace are labeled, tagged, or marked with this warning:

DANGER
CONTAINS BENZENE
CANCER HAZARD

Note: You should keep containers tightly covered when not in use to prevent unnecessary exposure and accidental spills.

References: Additional requirements are found in other chapters as follows:
- For spills, leaks, or other releases of benzene, go to Emergency response, chapter 296-824 WAC.
- For labeling go to:
  – The Safety and health core rules, chapter 296-800 WAC, and find the section Label containers holding hazardous chemicals, WAC 296-800-17025;
  AND
  – Material safety data sheet and label preparation, chapter 296-839 WAC.

[Statutory Authority: RCW 49.17.010, 49.17.040, 49.17.050, 49.17.060. 05-01-172, § 296-849-11010, filed 12/21/04, effective 3/1/05.]

WAC 296-849-11020 Exposure control areas.

You must:

• Establish temporary or permanent exposure control areas where airborne concentrations of benzene are above, or can be reasonably expected to be above, the permissible exposure limits (PELs) for benzene by doing all the following:

– Post signs at access points to exposure control areas that include this warning:

DANGER
Benzene
Cancer Hazard
Flammable - No Smoking
Authorized Personnel Only
Respirator Required

– Distinguish the boundaries of exposure control areas from the rest of the workplace in any way that minimizes employee access.

– Allow only authorized personnel to enter exposure control areas.

Note:
- You may use permanent or temporary enclosures, caution tape, ropes, painted lines on surfaces, or other materials to visibly distinguish exposure control areas or separate them from the rest of the workplace.
- When distinguishing exposure control areas you should consider factors such as:
  – The level and duration of airborne exposure.
  – Whether the area is permanent or temporary.
  – The number of employees in adjacent areas.

Reference: If exposure control areas are established, go to Respirators, WAC 296-849-13045.

[Statutory Authority: RCW 49.17.010, 49.17.040, 49.17.050, 49.17.060. 05-01-172, § 296-849-11020, filed 12/21/04, effective 3/1/05.]

WAC 296-849-11030 Exposure evaluations.

IMPORTANT:

• When you conduct an exposure evaluation in a workplace where an employee uses a respirator, the protection provided by the respirator is not considered.

• Following this section will fulfill the requirements to identify and evaluate respiratory hazards found in another chapter, Respiratory hazards, chapter 296-841 WAC.

You must:

• Conduct an employee exposure evaluation to accurately determine airborne concentrations of benzene by completing Steps 1 through 7 of the exposure evaluation process, each time any of the following apply:

– No evaluation has been conducted.

■ You have up to thirty days to complete an evaluation once benzene is introduced into your workplace.

– Changes have occurred in any of the following areas that may result in new or increased exposures:

■ Production.

■ Processes.

■ Exposure controls such as ventilation systems or work practices.

■ Personnel.

– You have any reason to suspect new or increased exposure may occur.

– Spills, leaks, or other releases have been cleaned up.

Note: As part of your exposure evaluation after cleanup, you will make sure exposure monitoring results have returned to prerelease levels.

Exposure evaluation process.

IMPORTANT:

• If you are evaluating employee exposures during cleaning and repair of barges and tankers that contained benzene:

– Collect samples that effectively measure benzene concentrations that employees may be exposed to;

AND

– Skip to Step 7.

• Following the exposure evaluation process is not necessary when you have documentation conclusively demonstrating benzene exposures for a particular operation and material cannot exceed the action level (AL) during any conditions reasonably anticipated.

– Documentation can be based on data or qualitative information, such as information about:

■ The material.

■ How the material is handled.

■ The work conditions.

– Retain this documentation for as long as you rely on it.

Step 1: Identify all employees who have potential airborne exposure to benzene in your workplace.

Step 2: Identify operations where fifteen-minute exposures could exceed benzene's short-term exposure limit (STEL) of 5 parts per million (ppm).

• Include operations where it is reasonable to expect high, fifteen-minute exposures, such as operations where:

– Tanks are opened, filled, unloaded, or gauged.

– Containers or process equipment are opened.

– Benzene is used as a solvent for cleaning.

Note: You may use monitoring devices such as colorimetric indicator tubes or real-time monitors to screen for activities where employee exposure monitoring results could be high.

Step 3: Select employees from those working in the operations you identified in Step 2 who will have their fifteen-minute exposures measured.

Step 4: Select employees from those identified in Step 1 who will have their eight-hour exposures monitored.

• Make sure the exposures of the employees selected represent eight-hour exposures for **all** employees identified at Step 1, including each job classification, work area, and shift.

Note: A written description of the procedure used for obtaining representative employee exposure monitoring results needs to be kept as part of your exposure records required by this chapter in Exposure records, WAC 296-849-11090. This description can be created while completing Steps 3 through 6 of this exposure evaluation process.

Step 5: Determine how you will obtain employee monitoring results.

• Select and use a method that is accurate to ±25%, with a confidence level of 95%.

Note:
- Here are examples of methods that meet this accuracy requirement:
  - OSHA Method 12 for air samples, found by going to http://www.osha.gov/dts/sltc/methods/toc.html.
  - NIOSH Method 1500, found by going to http://www.cdc.gov/niosh/homepage.html and link to the *NIOSH Manual of Analytical Methods*.

Step 6: Obtain employee exposure monitoring results by collecting air samples representing employees identified at Step 1.

– Collect fifteen-minute samples from employees selected at Step 3.

– Sample at least one shift representative of the eight-hour exposure for each employee selected at Step 4.

• Make sure samples are collected from each selected employee's breathing zone.

• Collecting area samples is permitted after emergency releases.

Note:
- You may use any sampling method that meets the accuracy specified in Step 5. Examples of these methods include:
  - Real-time monitors that provide immediate exposure monitoring results.
  - Equipment that collects samples that are sent to a laboratory for analysis.
- The following are examples of methods of monitoring representative of eight-hour exposures:
  - Collect one or more continuous samples, for example, a single eight-hour sample or four two-hour samples.
  - Take a minimum of five brief samples, such as fifteen-minute samples, during the work shift and at times selected randomly.
- For work shifts longer than eight hours, monitor the continuous eight-hour portion of the shift expected to have the highest average exposure concentration.

Step 7: Have the samples you collected analyzed to obtain monitoring results representing eight-hour and fifteen-minute exposures.

• Go to the scope of this chapter, WAC 296-849-100, and compare employee exposure monitoring results to the **values** found in Step 2a and follow Step 2b to determine if additional sections of this chapter apply.

Note:
- You may contact your local WISHA consultant for help:
  - Interpreting data or other information.
  - Obtaining eight-hour or fifteen-minute employee exposure monitoring results.
- To contact a WISHA consultant:
  - Go to another chapter, the Safety and health core rules, chapter 296-800 WAC, and find the resources section, and under "other resources," find service location for labor and industries.

[Statutory Authority: RCW 49.17.010, 49.17.040, 49.17.050, 49.17.060. 05-01-172, § 296-849-11030, filed 12/21/04, effective 3/1/05.]

WAC 296-849-11040 Personal protective equipment (PPE).

You must:

• Make sure employees use appropriate PPE as protection from skin or eye contact with liquid benzene.

Note: Harmful amounts of benzene can enter the body through skin and eye contact.

Reference: To see additional personal protective equipment requirements, go to the Safety and health core rules, chapter 296-800 WAC.

[Statutory Authority: RCW 49.17.010, 49.17.040, 49.17.050, 49.17.060. 05-01-172, § 296-849-11040, filed 12/21/04, effective 3/1/05.]

WAC 296-849-11050 Training.

You must:

• Provide training and information to employees:

– At the time of initial assignment to a work area where benzene is present;

AND

– At least every twelve months after initial training for employees exposed to airborne concentrations at or above the action level (AL) of 0.5 parts per million (ppm).

• Make sure training and information includes all of the following:

– Specific information on benzene for each hazard communication training topic. For the list of hazard communication training tropics, go to the Safety and health core rules, chapter 296-800 WAC, and find Inform and train your employees about hazardous chemicals in your workplace, WAC 296-800-17030;

AND

– An explanation of the contents of each of the following and guidance about where to find a copy:

■ This chapter.

■ The following found in another chapter, the General occupational health standards, chapter 296-62 WAC:

❖ The substance safety data sheet—benzene, found in WAC 296-62-07525, Appendix A.

❖ The substance technical guidelines—benzene, found in WAC 296-62-07527, Appendix B.

❖ The medical surveillance guidelines for benzene, found in WAC 296-62-07529, Appendix C;

AND

– A description of the medical evaluation requirements of this chapter found in:

■ Medical evaluations, WAC 296-849-12030;

AND

■ Medical removal, WAC 296-849-12050.

Reference: To see additional training and information requirements in other chapters, go to the:
- Respirators rule, chapter 296-842 WAC, and find the Training section, WAC 296-842-16005.
- Safety and health core rules, chapter 296-800 WAC, and find the section titled, Inform and train your employees about hazardous chemicals in your workplace, WAC 296-800-17030.

[Statutory Authority: RCW 49.17.010, 49.17.040, 49.17.050, 49.17.060. 05-01-172, § 296-849-11050, filed 12/21/04, effective 3/1/05.]

WAC 296-849-11065 Exposure monitoring observation.

You must:

(1) Provide affected employees and their designated representatives an opportunity to observe exposure monitoring during Step 6 of the exposure evaluation process found in Exposure evaluations, WAC 296-849-11030.

(2) Make sure observers who enter areas with benzene exposure:

• Are provided with and use the same protective clothing, respirators, and other personal protective equipment (PPE) that employees working in the area are required to use;

AND

• Follow safety and health requirements that apply.

[Statutory Authority: RCW 49.17.010, 49.17.040, 49.17.050, 49.17.060. 05-01-172, § 296-849-11065, filed 12/21/04, effective 3/1/05.]

WAC 296-849-11070 Notification.

You must:

• Provide written notification of exposure monitoring results to the employees represented by your exposure evaluation within five business days after the monitoring results become known to you.

– In addition, when employee exposure monitoring results are above a permissible exposure limit (PEL), provide written notification of all of the following within fifteen business days after these exposure monitoring results become known to you:

■ Corrective actions being taken and a schedule for completion;

AND

■ Any reason why exposures cannot be lowered to below the PELs for benzene.

Note:
- You can notify employees either individually or post the notifications in areas readily accessible to affected employees.
- Posted notification may need specific information that allows affected employees to determine which monitoring results apply to them.
- Notification may be in any written form, such as handwritten or e-mail.
- Notification may be limited to the required information, such as exposure monitoring results.
- When notifying employees about corrective actions, your notification may refer them to a separate document that's available and provides the required information.

[Statutory Authority: RCW 49.17.010, 49.17.040, 49.17.050, 49.17.060. 05-01-172, § 296-849-11070, filed 12/21/04, effective 3/1/05.]

WAC 296-849-11090 Exposure records.

You must:

• Establish and keep complete and accurate records for all exposure monitoring conducted under this chapter. Make sure the record includes at least:

– The name, Social Security number, or other unique identifier, and job classification of the employee sampled and all other employees represented by the sampled employee.

– The type of respirator worn, if any.

– A description of the methods used to obtain exposure monitoring results.

– A description of the procedure used to obtain representative employee exposure monitoring results.

– The date, number, duration, and the result of each sample taken.

Note: It is useful to record any personal protective equipment worn by the employee, in addition to the type of respirator worn.

You must:

• Keep exposure monitoring records for at least thirty years.

Reference:
- To see additional requirements for employee exposure records including access, and transfer requirements, go to another chapter, Employee medical and exposure records, chapter 296-802 WAC.
- Exposure monitoring records need to be kept longer than thirty years for employees participating in medical monitoring, go to Medical records, WAC 296-849-30080, found within this chapter.

[Statutory Authority: RCW 49.17.010, 49.17.040, 49.17.050, 49.17.060. 05-01-172, § 296-849-11090, filed 12/21/04, effective 3/1/05.]

WAC 296-849-120 Exposure and medical monitoring.

Summary:

Your responsibility:

To detect any significant changes in employee health and exposure monitoring results.

IMPORTANT:

These sections apply when employee exposure monitoring results are either:

• At or above the action level (AL) of 0.5 parts per million (ppm) for benzene;

OR

• Above either of the permissible exposure limits for benzene.

Contents

Periodic exposure evaluations
WAC 296-849-12010.
Medical evaluations
WAC 296-849-12030.
Medical removal
WAC 296-849-12050.
Medical records
WAC 296-849-12080.

[Statutory Authority: RCW 49.17.010, 49.17.040, 49.17.050, 49.17.060. 05-01-172, § 296-849-120, filed 12/21/04, effective 3/1/05.]

WAC 296-849-12010 Periodic exposure evaluations.

Exemption: Periodic exposure evaluations aren't required if exposure monitoring results conducted to fulfill requirements in Exposure evaluation, WAC 296-849-11030, are below the action level (AL) and short-term exposure limit (STEL).

You must:

• Obtain employee exposure monitoring results as specified in Table 3, by repeating Steps 3, 4, 6, and 7 of the exposure evaluation process found within this chapter, in Exposure evaluations, WAC 296-849-11030.

Note: If you document that one work shift consistently has higher exposure monitoring results than another for a particular operation, then you can limit sample collection to the work shift with higher exposures and use results to represent all employees performing the operation on other shifts.

Table 3
Periodic Exposure Evaluation Frequencies

If exposure monitoring results	Then
Are between the: – AL of 0.5 ppm **AND** – Eight-hour time-weighted average (TWA_8) of 1 ppm	Conduct additional exposure evaluations at least every twelve months for the employees represented by the monitoring results.
Have decreased to a concentration between the AL and TWA_8; **AND** The decrease is demonstrated by two consecutive exposure evaluations, made at least seven days apart.	You may **decrease** your evaluation frequency to every twelve months for employees represented by the monitoring results.
Are above the short-term exposure limit **(STEL)** of 5 ppm	Repeat as often as necessary to evaluate employee exposure.
Have decreased to below the AL and the STEL **AND** The decrease is demonstrated by two consecutive evaluations, made at least seven days apart.	You may **stop** periodic exposure evaluations for employees represented by the monitoring results.

[Statutory Authority: RCW 49.17.010, 49.17.040, 49.17.050, 49.17.060. 05-01-172, § 296-849-12010, filed 12/21/04, effective 3/1/05.]

WAC 296-849-12030 Medical evaluations.

IMPORTANT:

Medical evaluations conducted under this section will satisfy the medical evaluation requirement found in Respirators, chapter 296-842 WAC.

You must:

• Provide the relevant medical follow-up specified in Tables 4 and 5 to any employee exposed to benzene during an emergency.

• Make medical evaluations available to current employees who meet the following criteria:

– Potential or actual exposure to benzene at or above the action level (AL) for at least thirty days in any twelve-month period.

– Potential or actual exposure to benzene at or above either permissible exposure limit (PEL) for at least ten days in a twelve-month period.

– Past exposure to concentrations above 10 ppm benzene for at least thirty days in a twelve-month period before November 11, 1988.

– Current or past work as a tire building machine operator using solvents containing more than 0.1% benzene during tire building operations.

You must:

• Make medical evaluations available at no cost to employees.

– Pay all costs, including travel costs and wages associated with any time spent outside of the employee's normal work hours;

• Make medical evaluations available at reasonable times and places;

• Make medical evaluations available by completing Steps 1 through 6 of the medical evaluation process for each employee covered.

Note:
- Employees who wear respirators need to be medically evaluated to make sure the respirator will not harm them, before they are assigned work in areas requiring respirators. Employees who decline to receive medical examination and testing to monitor for health effects caused by benzene are not excluded from receiving a separate medical evaluation for a respirator use.
- If employers discourage participation in medical monitoring for health effects caused by benzene, or in any way interfere with an employee's decision to continue with this program, this interference may represent unlawful discrimination under RCW 49.17.160, Discrimination against employee filing, instituting proceeding, or testifying prohibited—Procedure—Remedy.

Helpful tool:

Declination form for nonemergency related medical evaluations.

• You may use this optional form to document employee decisions to decline participation in the medical evaluation process for exposure to benzene.

Medical evaluation process:

Step 1: Identify employees who qualify, as stated above, for medical evaluations.

Step 2: Make medical evaluations available for employees identified in Step 1 at the following times:

• Initially, before the employee starts a job or task assignment where benzene exposure will occur.

• Every twelve months from the initial medical evaluation.

• Whenever the employee develops signs or symptoms commonly associated with toxic benzene exposure.

• After benzene exposure from an emergency.

Step 3: Select a licensed health care professional (LHCP) who will conduct or supervise medical evaluations and make sure:

• Individuals who conduct pulmonary function tests have completed a training course in spirometry sponsored by an appropriate governmental, academic, or professional institution, if they are not licensed physicians;

AND

• Your LHCP uses an accredited laboratory, such as one accredited by a nationally or state-recognized organization, to conduct laboratory tests.

Step 4: Make sure the LHCP receives all of the following before the medical evaluation is performed:

• A copy of:

– This chapter.

– The following information found in the General occupational health standards, chapter 296-62 WAC:

■ Appendix A, the substance safety data sheet—benzene, found in WAC 296-62-07525.

■ Appendix B, the substance technical guidelines—benzene, found in WAC 296-62-07527.

■ Appendix C, the medical surveillance guidelines for benzene, found in WAC 296-62-07529.

• A description of the duties of the employee being evaluated and how these duties relate to benzene exposure.

• The anticipated or representative exposure monitoring results for the employee being evaluated.

• A description of the personal protective equipment (PPE) each employee being evaluated uses or will use.

• Information from previous employment-related examinations when this information is not available to the examining LHCP.

• Instructions that the written opinions the LHCP provides, be **limited to** the following information:

– Specific records, findings, or diagnosis relevant to the employee's ability to work around benzene.

– The occupationally relevant results from examinations and tests.

– A statement about whether or not medical conditions were found that would increase the employee's risk for impairment from exposure to benzene.

– Any recommended limitations for benzene exposure.

– Whether or not the employee can use respirators and any recommended limitations for respirator or other PPE use.

– A statement that the employee has been informed of medical results and medical conditions caused by benzene exposure requiring further explanation or treatment.

Step 5: Provide the medical evaluation to the employee. Make sure it includes the content listed in Table 4, Content of medical evaluations, and Table 5, Medical follow-up requirements.

Step 6: Obtain the LHCP's written opinion for each employee's medical evaluation and give a copy to the employee within fifteen days of the evaluation date.

• Make sure the written opinion is limited to the information specified for written opinions in Step 4.

Note: If the written opinion contains specific findings or diagnoses unrelated to occupational exposure, send it back and obtain a revised version without the additional information.

IMPORTANT:

These tables apply when conducting medical evaluations, including medical follow-up for employees exposed to benzene during emergencies.

Table 4
Content of Medical Evaluations

When conducting	Include
An initial evaluation	• A detailed history including: – Past work exposure to benzene or other hematological toxins; – Exposure to marrow toxins outside of current employment; – Exposure to ionizing radiation; – Family history of blood dyscrasias including hematological neoplasms; – History of blood dyscrasias including genetic hemoglobin abnormalities, bleeding abnormalities, and abnormal function of formed blood elements; – History of renal or liver dysfunction; – History of medications routinely taken. • A complete physical examination: – Include a pulmonary function test and specific evaluation of the cardiopulmonary system **if** the employee is required to use a respirator for at least thirty days a year. • A complete blood count including a: – Leukocyte count with differential; – Quantitative thrombocyte count; – Hematocrit; – Hemoglobin; – Erythrocyte count and indices (MCV, MCH, MCHC).

When conducting	Include
	• Additional tests the examining LHCP determines are necessary based on alterations in the components of the blood or other signs that may be related to benzene exposure. • **Medical follow-up as required in Table 5.**
Annual evaluations	• An updated medical history covering: – Any new exposure to potential marrow toxins; – Changes in medication use; – Any physical signs associated with blood disorders. • A complete blood count including a: – Leukocyte count with differential; – Quantitative thrombocyte count; – Hematocrit; – Hemoglobin; – Erythrocyte count and indices (MCV, MCH, MCHC). • Additional tests that the examining LHCP determines necessary, based on alterations in the components of the blood or other signs that may be related to benzene exposure. • A pulmonary function test and specific evaluation of the cardiopulmonary system every three years if the employee is required to use a respirator for at least thirty days a year. • **Medical follow-up as required in Table 5.**
Evaluations triggered by employee signs and symptoms commonly associated with the toxic effects of benzene exposure	• An additional medical examination that addresses elements the examining LHCP considers appropriate.
Evaluations triggered by employee exposure during an emergency	• A urinary phenol test performed on the exposed employee's urine sample within seventy-two hours of sample collection. – The urine sample must be collected at the end of the work shift associated with the emergency; – The urine specific gravity must be corrected to 1.024.

When conducting	Include
	• **Medical follow-up as required in Table 5.** **Reference:** Employees who are not covered by medical evaluation requirements in this chapter may be covered by medical evaluation requirements in other chapters such as Emergency response, chapter 296-824 WAC.

Table 5
Medical Follow-up Requirements

If	Then
• The **complete blood count test** result is normal.	• No further evaluation is required.
• The **complete blood count test** shows any of the following abnormal conditions: – A leukocyte count less than 4,000 per mm^3 or an abnormal differential count; **OR** – A thrombocyte (platelet) count that is either: ■ More than 20% below the employee's most recent values; **OR** ■ Outside the normal limit (95% C.I.) according to the laboratory; **OR** – The hematocrit or hemoglobin level is either of the following, and can not be explained by other medical reasons: ■ Below the normal limit (outside the 95% C.I.), as determined by the laboratory for the particular geographical area; **OR**	• Repeat the complete blood count within two weeks: – If the abnormal condition persists, refer the employee to a hematologist or an internist for follow-up medical examination and evaluation, unless the LHCP has good reason to believe it is unnecessary; – The hematologist or internist will determine what follow-up tests are necessary; **AND** • Follow the requirements found in Medical removal, WAC 296-849-12050.

If	Then
■ Persistently decreasing compared to the employee's preexposure levels.	
Results from the **urinary phenol test** conducted during an emergency evaluation show phenol levels less than 75 mg/L.	• No further evaluation is required.
Results from the **urinary phenol test** conducted during an emergency evaluation show phenol levels equal or more than 75 mg/L.	• Provide a complete blood count monthly for three months. Include a: – Leukocyte count with differential; – Thrombocyte count; – Erythrocyte count; **AND** • If any of the abnormal conditions previously listed in this table for complete blood count results are found: – Provide the employee with periodic examinations, if directed by the LHCP; – **Refer the employee** to a hematologist or an internist for follow-up medical examination and evaluation unless the LHCP has good reason to believe a referral is unnecessary; – Follow the requirements found in Medical removal, WAC 296-849-12050; **AND** – The hematologist or internist will determine what follow-up tests are necessary.

[Statutory Authority: RCW 49.17.010, 49.17.040, 49.17.050, 49.17.060. 05-01-172, § 296-849-12030, filed 12/21/04, effective 3/1/05.]

WAC 296-849-12050 Medical removal.

IMPORTANT:

This section applies when an employee is referred to a hematologist or an internist for follow-up medical examination and evaluation required in Table 5, Medical follow-up requirements found in Medical evaluations, WAC 296-849-12030.

You must:

(1) Remove the employee from areas where benzene exposure is above the action level (AL) by doing either of the following:

• Transfer the employee to a job currently available that:

– The employee qualifies for, or could be trained for in a short period of time;

AND

– Will keep the employee's exposure to benzene as low as possible and never above the AL;

OR

• Remove the employee from the workplace until either:

– A job becomes available that:

■ The employee qualifies for, or could be trained for in a short period of time;

AND

■ Will keep the employee's exposure to benzene as low as possible and never above the AL;

OR

– The employee is returned to work or permanently removed from benzene exposure as determined by completing the medical evaluation process for removed employees.

(2) Maintain the employee's current pay rate, seniority, and other benefits.

Note: If you must provide medical removal benefits and the employee will receive compensation for lost pay from other sources, you may reduce your medical removal benefit obligation to offset the amount provided by these sources. Examples of other sources are:
- Public or employer-funded compensation programs;
- Employment by another employer, made possible by the employee's removal.

You must:

(3) Complete Steps 1 through 4 of the medical evaluation process for removed employees, **within six months** of the date the licensed health care professional (LHCP) refers an employee to a hematologist or internist for follow-up.

• Make sure all examinations and evaluations are provided at no cost to the employee.

– Make examinations and evaluations available at reasonable times and places;

AND

– Pay for travel costs and wages, including any time spent outside of the employee's normal work hours.

Medical evaluation process for removed employees:

Step 1: Make sure the following is provided to the hematologist or internist:

• The information you provided to the LHCP in Step 4 of Medical evaluations, WAC 296-849-12030;

• The employee's medical record as described in Medical records, WAC 296-849-12080.

Note: The examining LHCP may provide this information for you.

Step 2: Provide the employee an examination and evaluation by a hematologist or internist.

• When the examination and evaluation is completed, you and the employee must be informed, in writing, of the referring LHCP's decision to continue **or** end the employee's removal from benzene exposure.

• Include the following in the LHCP's decision if removal of the employee continues:

– The expected time period for removal to continue;

AND

– Requirements for future medical examinations to review the decision.

• If the LHCP recommends the employee **end removal** and return to the usual job with benzene exposure, **skip Steps 3 and 4.**

Step 3: Provide further medical examination and evaluation to the employee when the LHCP's decision from Step 2 informs you that medical removal must continue.

Note:
- During this step the LHCP, in consultation with the hematologist or internist, decides whether the employee:
  – May return to their usual job;
  OR
  – Should be permanently removed from exposures that exceed the AL.
- If the LHCP recommends the employee return to their usual job, skip Step 4.

Step 4: When the LHCP recommends permanent removal for the employee, make sure all the following conditions are met:

• The employee has an opportunity to transfer to another job that is currently available (or will become available);

• The job is one the employee qualifies for, or could be trained for in a short period of time;

• There is no reduction in the employee's current pay rate, seniority, and other benefits;

• The employee's benzene exposures will be as low as possible, but never more than the AL.

[Statutory Authority: RCW 49.17.010, 49.17.040, 49.17.050, 49.17.060. 05-01-172, § 296-849-12050, filed 12/21/04, effective 3/1/05.]

WAC 296-849-12080 Medical records.

IMPORTANT:

This section applies when a medical evaluation is performed, or any time a medical record is created for an employee exposed to benzene.

You must:

• Establish and maintain complete and accurate medical records for each employee receiving a medical evaluation and make sure the records include **all** the following:

– The employee's name and Social Security number, or other unique identifier;

– A copy of the licensed health care professional's (LHCP's) written opinions including written decisions and recommendations for the employee removed from exposure;

– A copy of the information required in Step 4 of the medical evaluation process, found in WAC 296-849-12030, **except** for the copy of this chapter and the appendices listed.

• Maintain medical evaluation records for the duration of employment plus thirty years.

Note: Your medical provider may keep these records for you. Other medical records such as an employee's medical history, need to be kept as a confidential record by the medical provider and accessed only with the employee's consent.

Reference: To see additional employee medical record requirements, including access and transfer requirements, go to another chapter, Employee medical and exposure records, chapter 296-802 WAC.

[Statutory Authority: RCW 49.17.010, 49.17.040, 49.17.050, 49.17.060. 05-01-172, § 296-849-12080, filed 12/21/04, effective 3/1/05.]

WAC 296-849-130 Rules for exposure control areas.

Summary:

Your responsibility:

To protect employees from exposure to benzene by using feasible exposure controls and appropriate respirators.

IMPORTANT:

These sections apply when existing or potential employee exposure monitoring results are above either of the following permissible exposure limits (PELs):

• The eight-hour time-weighted average (TWA_8) of 1 part per million (ppm);

OR

• The fifteen-minute short-term exposure limit (STEL) of 5 ppm.

Contents:

Exposure control plan
WAC 296-849-13005.
Exposure controls
WAC 296-849-13020.
Respirators
WAC 296-849-13045.

[Statutory Authority: RCW 49.17.010, 49.17.040, 49.17.050, 49.17.060. 05-01-172, § 296-849-130, filed 12/21/04, effective 3/1/05.]

WAC 296-849-13005 Exposure control plan.

Exemption: This section does not apply to the cleaning and repair of barges and tankers that contained benzene.

You must:

• Establish and implement a written exposure control plan for exposure control areas that include a schedule for developing and implementing feasible exposure controls to reduce benzene exposure to, or below, the PELs.

Reference: To see examples of exposure controls, go to Respiratory hazards, chapter 296-841 WAC, and find Table 1 in Control employee exposure, WAC 296-841-20010.

Note: Respirators and other personal protective equipment (PPE) help protect employees from exposures, but are **not** substitutes for feasible exposure controls.

You must:

• Review and update your exposure control plan as needed, based on the most recent exposure evaluation results.

• Provide a copy of your exposure control plan to affected employees and their designated representatives when they ask to review or copy it.

[Statutory Authority: RCW 49.17.010, 49.17.040, 49.17.050, 49.17.060. 05-01-172, § 296-849-13005, filed 12/21/04, effective 3/1/05.]

WAC 296-849-13020 Exposure controls.

IMPORTANT:

Respirators and other personal protective equipment (PPE) do **not** substitute for feasible exposure controls.

You must:

• Use feasible exposure controls to reduce exposures, as specified in Table 6.

Reference: To see examples of exposure controls, go to Respiratory hazards, chapter 296-841 WAC, and find Table 1 in Control employee exposures, WAC 296-841-20010.

Table 6
Exposure Control Requirements

If:	Then you must use feasible controls to:
You have operations where employees clean and repair barges or tankers which have contained benzene	Keep all employee exposure concentrations below 10 parts per million (ppm).

If:	Then you must use feasible controls to:
You can document that benzene is used for less than thirty days a year in the workplace	Reduce eight-hour employee exposure monitoring results to a time-weighted average of 10 ppm or less. **Note:** If employee exposure monitoring results are between 1 and 10 ppm, you are permitted to use respirators or a combination of respirators and feasible controls to protect employees.
Employees are exposed to benzene above a PEL for at least thirty days a year	Reduce eight-hour employee exposure concentrations to the TWA_8 of 1 ppm or less; **AND** Reduce fifteen-minute employee exposure concentrations to the STEL of 5 ppm or less.

[Statutory Authority: RCW 49.17.010, 49.17.040, 49.17.050, 49.17.060. 05-01-172, § 296-849-13020, filed 12/21/04, effective 3/1/05.]

WAC 296-849-13045 Respirators.

IMPORTANT:

These requirements are in addition to the requirements found in other chapters:

• Respiratory hazards, chapter 296-841 WAC;

• Respirators, chapter 296-842 WAC.

You must:

• Provide respirators and require that employees use them in circumstances where exposure is above either permissible exposure limit (PEL) for benzene, including any of the following circumstances:

– Employees are in an exposure control area;

– Feasible exposure controls are being put in place;

– Where you determine that exposure controls are not feasible;

– Feasible exposure controls do not reduce exposures to, or below, a PEL.

• Emergencies.

• Meet these requirements to protect employees from benzene exposure above a PEL:

– Limit selection of escape respirators to either:

■ A full-facepiece organic vapor gas mask;

OR

■ A full-facepiece self-contained breathing apparatus (SCBA);

OR

■ A hood-style SCBA that operates in positive-pressure mode.

• Make sure respirator cartridges or canisters are replaced at the beginning of each work shift, or sooner if their service life has expired.

• Make sure canisters on gas masks and powered air-purifying respirators (PAPRs) have a minimum service life of four hours when tested under these conditions:

– A benzene concentration of 150 ppm;

– A temperature of 25°C;

– A relative humidity of 85%;

– A flow rate of one of the following:

■ 64 liters per minute (lpm) for nonpowered air-purifying respirators;

■ 115 lpm for **tight**-fitting PAPRs;

■ 170 lpm for **loose**-fitting PAPRs.

• Provide an employee a respirator with low breathing resistance, such as a PAPR or an air-line respirator when the:

– Employee cannot use a negative-pressure respirator;

AND

– A licensed health care professional's (LHCP's) written opinion allows this type of respirator.

[Statutory Authority: RCW 49.17.010, 49.17.040, 49.17.050, 49.17.060. 05-01-172, § 296-849-13045, filed 12/21/04, effective 3/1/05.]

WAC 296-849-190 Definitions.

Action level an airborne concentration of benzene of 0.5 parts per million (ppm) calculated as an eight-hour time-weighted average.

Authorized personnel individuals specifically permitted by the employer to enter the exposure control area to perform necessary duties, or to observe employee exposure evaluations as a designated representative.

Benzene liquid benzene, benzene vapor, and benzene in liquid mixtures and the vapors released by these liquids.

The chemical abstract service (CAS) registry number for benzene is 71-43-2. CAS numbers are internationally recognized and used on material safety data sheets (MSDSs) and other documents to identify substances. For more information see http://www.cas.org/about.

Breathing zone the space around and in front of an employee's nose and mouth, forming a hemisphere with a 6- to 9-inch radius.

Bulk wholesale storage facility any bulk terminal or bulk plant where fuel is stored before its delivery to wholesale customers.

Container any container, except for pipes or piping systems, that contains benzene. It can be any of the following:

• Barrel;

• Bottle;

• Can;

• Cylinder;

• Drum;

• Reaction vessel;

• Storage tank.

Day any part of a calendar day.

Designated representative any of the following:

• Any individual or organization to which an employee gives written authorization;

• A recognized or certified collective bargaining agent without regard to written employee authorization;

OR

• The legal representative of a deceased or legally incapacitated employee.

Emergency any event that could or does result in the unexpected significant release of benzene. Examples of emergencies include equipment failure, container rupture, or control equipment failure.

Exposure the contact an employee has with benzene, whether or not protection is provided by respirators or other personal protective equipment (PPE). Contact can occur through various routes of entry such as inhalation, ingestion, skin contact, or skin absorption.

Licensed health care professional (LHCP) an individual whose legally permitted scope of practice allows him or her to provide some or all of the health care services required for medical evaluations.

Permissible exposure limits (PELs) PELs are employee exposures to toxic substances or harmful physical agents that must not be exceeded. PELs are also specified in various WISHA rules found in other chapters. The PELs for benzene are the:

• Eight-hour time-weighted average (TWA_8) of 1 part per million (ppm);

AND

• Fifteen-minute short-term exposure limit (STEL) of 5 ppm.

Short-term exposure limit (STEL) an exposure limit averaged over a fifteen-minute period that must not be exceeded during any part of an employee's workday.

Time-weighted average (TWA_8) an exposure limit averaged over an eight-hour period that must not be exceeded during an employee's workday.

Vapor control systems equipment that controls the vapor displaced when chemicals are loaded and unloaded from truck or storage tanks. It also processes or balances the vapor back into the truck or storage tanks.

[Statutory Authority: RCW 49.17.010, 49.17.040, 49.17.050, 49.17.060. 05-01-172, § 296-849-190, filed 12/21/04, effective 3/1/05.]

Chapter 296-860 WAC

RAILROAD CLEARANCES AND WALKWAYS IN PRIVATE RAIL YARDS AND PLANTS

(Formerly chapter 296-28 WAC)

WAC

296-860-100	Scope.
296-860-200	Maintain safe clearances and walkways.
296-860-20010	Post warning signs and train employees about clearances approved before April 3, 1961.
296-860-20020	Construct and maintain rail yard walkways for employee safety.
296-860-20030	Install radiation detectors according to manufacturer's specifications.
296-860-20040	Maintain overhead clearances.
296-860-20050	Maintain side clearances.
296-860-20060	Maintain clearances between tracks.
296-860-20070	Move excessive height or width rail car loads with care.
296-860-20080	Follow these requirements to conduct narrow gauge rail operations.
296-860-300	Definitions.

WAC 296-860-100 Scope.

IMPORTANT:

This chapter applies to all railroad clearances and walkways in rail yards and plants including logging railroad yards such as mill yards, maintenance yards and sorting yards.

If you are uncertain about which WISHA requirements to follow, you must comply with those that best protect employees' safety and health. Contact your local L&I office if you need assistance in making this decision.

Exemptions:

• These exemptions apply to chapter 296-860 WAC, Railroad clearances and walkways in private rail yards and plants, and do not require a department variance:

– You may move the following equipment, using less than the minimum standard clearances, if the situation is unavoidable and you have taken all reasonable steps to protect your employees:

■ Track construction or maintenance materials

■ Special work equipment used for railroad construction, maintenance or operations

■ Any railroad equipment during emergencies.

– You may have overhead or side clearances less than the minimum standard clearances required in this chapter if they were legally created before April 3, 1961.

Note: If a building, structure, or facility constructed before April 3, 1961, is relocated or reconstructed, the clearance requirements in this chapter apply unless the department grants a variance.

– Tracks built before April 3, 1961:

■ May be extended according to the legal track clearance requirements in effect when they were originally constructed

■ Are exempt from the track clearance requirements in WAC 296-860-10050, Table 5.

– Chapter 296-54 WAC, Safety standards—Logging operations, regulates all logging railroads or any rail operations related to logging, except for yard clearances.

Other rules that may apply to your workplace

The *WISHA Safety & Health Core Rules* book, chapter 296-800 WAC, contains the basic requirements that apply to employers in Washington. It also contains:

• An introduction that lists important information you should know, including a section on building, fire and electrical codes

• A resource section that includes a complete list of all WISHA rules

Other WISHA rules may apply to you, depending upon the activities and operations of your workplace. Contact your local L&I office if you are uncertain about which WISHA requirements pertain to you.

• To access the *Safety & Health Core Rules* book online: http://www.lni.wa.gov/wisha/corerules/default.htm

• For a CD or paper copy contact us:

Labor and Industries
P.O. Box 44620
Olympia, WA 98504-4620
Telephone: 1-800-4be-safe (1-800-423-7233)

[Statutory Authority: RCW 49.17.010, [49.17].040, and [49.17].050. 02-17-106, § 296-860-100, filed 8/21/02, effective 10/1/02.]

WAC 296-860-200 Maintain safe clearances and walkways.

SUMMARY

Your responsibility:

To prevent injuries and fatalities to employees by maintaining safe railroad clearances and walkways in your rail yards and plants.

You must:

Post warning signs and train employees about clearances approved before April 3, 1961

WAC 296-860-20010

Construct and maintain rail yard walkways for employee safety

WAC 296-860-20020

Install radiation detectors according to manufacturer's specifications

WAC 296-860-20030

Maintain overhead clearances

WAC 296-860-20040

Maintain side clearances

WAC 296-860-20050

Maintain clearances between tracks

WAC 296-860-20060

Move excessive height and/or width rail car loads with care

WAC 296-860-20070

Conduct narrow gauge rail operations according to the requirements of this section

WAC 296-860-20080.

[Statutory Authority: RCW 49.17.010, [49.17].040, and [49.17].050. 02-17-106, § 296-860-200, filed 8/21/02, effective 10/1/02.]

WAC 296-860-20010 Post warning signs and train employees about clearances approved before April 3, 1961.

You must:

(1) Post warning signs near tracks with clearances approved before April 3, 1961, so employees are aware of the minimal clearances and their potential hazards. The signs must:

– Be highly visible

– Be easy to read

– Alert employees to the danger of railway equipment operating on your yard and plant tracks.

(2) Include in your employee safety and health training information about:

– Any minimal clearances and their location

– Potential hazards associated with them

– The location of any clearance warning signs.

[Statutory Authority: RCW 49.17.010, [49.17].040, and [49.17].050. 02-17-106, § 296-860-20010, filed 8/21/02, effective 10/1/02.]

WAC 296-860-20020 Construct and maintain rail yard walkways for employee safety.

Important:

• You have two years from October 01, 2002, (the effective date of this rule), to comply with the construction requirements of this section, unless the department determines during an inspection that your walkways create a serious safety hazard.

• If you are not sure a serious safety hazard exists in your workplace, you can request a free consultation from the department by calling your local L&I office.

Construction of walkways

You must:

• Build walkways in rail yard areas where employees regularly work on the ground.

• Construct rail yard walkways that can be maintained in a safe condition:

– With reasonably smooth walking surfaces

– That will not interfere with track drainage.

• Use any of the following materials when constructing your walkway:

– Crushed material that does not exceed 1 1/2 inches in size. For this rule, "1 1/2 inches in size" means one of the following (percentages refer to weight measurement and sieve size standard in the industry):

Percentage of material passing through a sieve opening	Sieve opening size
100	1 1/2 inch square
90 - 100	1 inch square
40 - 80	3/4 inch square
15 - 60	1/2 inch square
0 - 30	3/8 inch square
0 - 10	#4
0 - 5	#8
0 - 0.5	#200

Smaller crushed material is preferred and should be used where drainage and durability is not an issue. Crushed material that is 3/4 inch or less in size is recommended for switching leads in yards.

• Asphalt, concrete, planking, grating, or other similar material.

• Natural materials such as gravel or dirt.

You must:

• Construct walkways wide enough for employees to safely perform their duties

• Construct walkways with a grade or slope in any direction with not more than one inch of elevation for each eight inches of horizontal length, unless it is geographically impractical.

Maintenance of walkways

You must:

• Keep all walkways clear of vegetation, debris, mud, or other obstructions that create a potential hazard for employees.

• Remove all standing water from all walkways as soon as reasonably possible.

• Reopen walkways temporarily closed for a construction project within thirty days after the project is completed.

You must:

• Repair walkways that have been damaged and temporarily closed because of an emergency within thirty days after the emergency ends.

Definition:

Emergency: Any unforeseen occurrence endangering life, limb, or property.

• Obtain a department variance before permanently removing any bridge or trestle walkway from use after October 1, 2002 (the effective date of this rule).

Note: The requirements for filing a variance are located in the Safety and health core rules, chapter 296-350 WAC, and WISHA appeals, penalties, and other procedural rules.

[Statutory Authority: RCW 49.17.010, [49.17].040, and [49.17].050. 02-17-106, § 296-860-20020, filed 8/21/02, effective 10/1/02.]

WAC 296-860-20030 Install radiation detectors according to manufacturer's specifications.

IMPORTANT.

This section applies only to those private yards and plants where the installation of radiation detectors beside railroad tracks is required due to the nature of the business; for example, scrap metal yards.

You must:

• Install radiation detectors beside the railroad tracks in your yard and/or plant according to the manufacturer's specifications.

• Post signs on each radiation detector installed less than eight feet six inches from the centerline of the track:

– Warning employees that the side clearances between the detector and the track centerline are less than the required standard minimum side clearances found in this chapter

– Prohibiting employees from riding on the side of any rail car passing through the detector.

[Statutory Authority: RCW 49.17.010, [49.17].040, and [49.17].050. 02-17-106, § 296-860-20030, filed 8/21/02, effective 10/1/02.]

WAC 296-860-20040 Maintain overhead clearances.

Exemption:

Engine houses and car shops are exempt from the overhead clearance requirements of this section.

You must:

• Make sure overhead railroad clearances are at least twenty-two feet six inches unless a clearance requirement found in Table 1 applies.

Note:
- Clearance requirements are based on the assumption that generally used rail equipment in private yards and plants is no more than ten feet ten inches wide by fifteen feet six inches high.
- WAC 296-860-10060 regulates the use of any rail equipment that exceeds the above dimensions.
- Minimum vertical clearances for all overhead wires are specified in Parts 1, 2, and 3 of the National Electrical Safety Code (NESC) as referenced in WAC 296-45-045, electrical workers safety rules, NESC applicable. See NESC 231 and 232.

Table 1 - Minimum Overhead Clearances for Buildings, Structures, Tunnels, and Bridges

If your overhead clearance involves:	Then the minimum overhead clearance requirements are:
An entirely enclosed building	18 feet when tracks end inside an entirely enclosed building. Also: • The department must approve any reduction from 22 feet 6 inches before the reduction takes place. • If an overhead clearance is less than 22 feet 6 inches, all cars, locomotives or other equipment must come to a full stop before entering the building. • See Illustration 1.
All other structures	Defined by the half-circumference of a circle whose: • Radius is 8 feet 6 inches **AND** • Center is located on a line perpendicular to the track's centerline and 14 feet above the top of the highest rail. • See Illustration 1.
Tunnels, over-crossings, and bridges	Defined by the half-circumference of a circle whose: • Radius is 8 feet **AND** • Center is located on a line perpendicular to the track's centerline and 14 feet 6 inches above the top of the highest rail. • See Illustration 1.

Illustration 1 - Minimum Overhead Clearances for Buildings, Structures, Tunnels, and Bridges

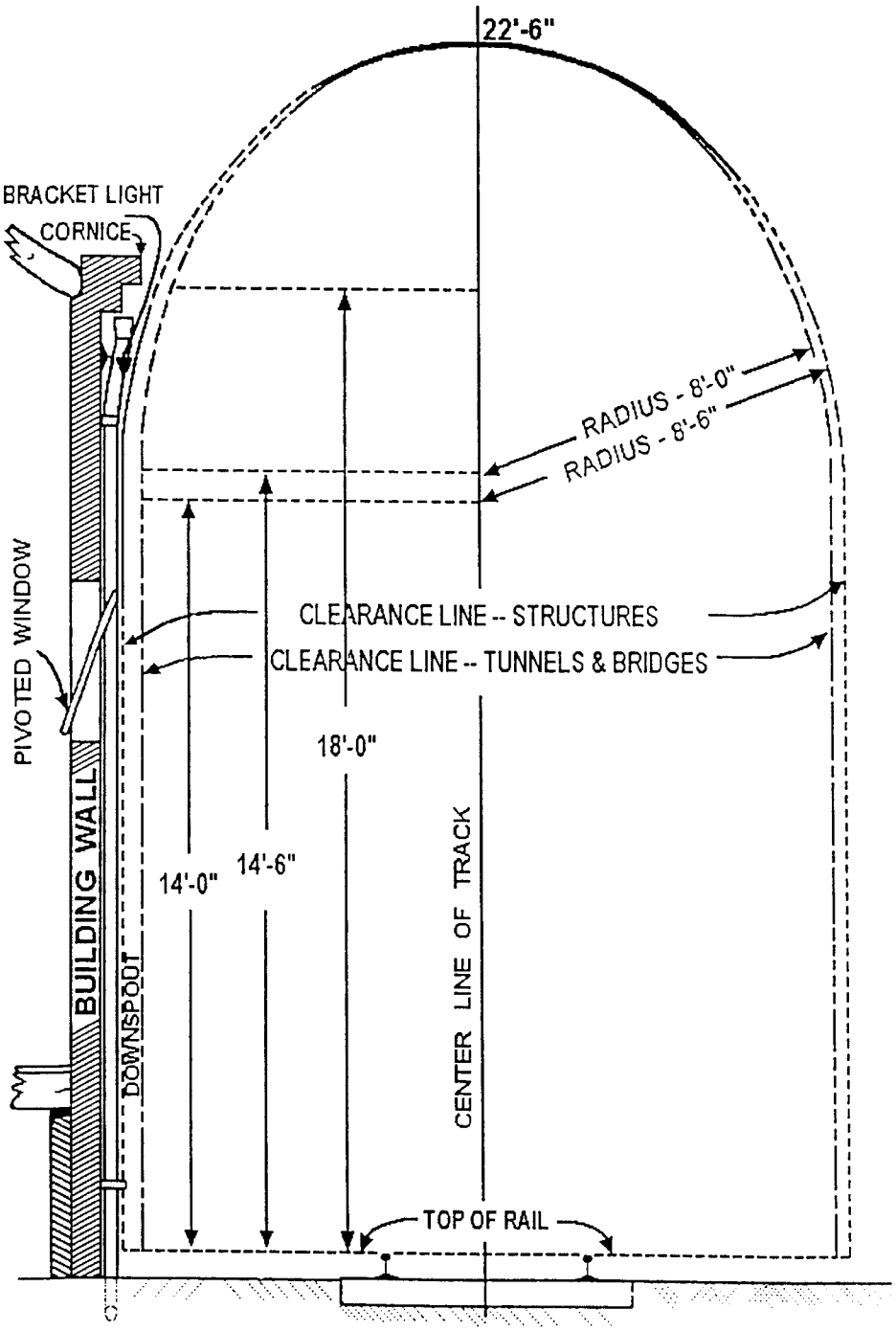

[Statutory Authority: RCW 49.17.010, [49.17].040, and [49.17].050. 02-17-106, § 296-860-20040, filed 8/21/02, effective 10/1/02.]

WAC 296-860-20050 Maintain side clearances.

You must:

• Make sure side clearances are at least eight feet six inches from the track centerline unless clearance requirements found in Tables 2, 3, or 4 apply.

Note: All side clearances in Tables 2, 3, and 4 that reference "the track centerline" are based on the assumption that private rail operations generally use track that is standard gauge width (4 feet 8 1/2 inches).

Table 2 - Minimum Side Clearance for Platforms

If Your Platform Type is:	Then the Minimum Clearance Requirements Between the Track Centerline and a Platform Edge are:
Type 1 Platforms with heights of 8 inches or less above the top of the rail.	4 feet 8 inches See Illustration 2.
Type 2 Platforms with heights of 4 feet or less above the top of the rail.	7 feet 3 inches See Illustration 2.
Type 3 Platforms with heights of 4 feet 6 inches or less above the top of the rail and the platforms are used primarily for loading and/or unloading refrigerator cars.	8 feet See Illustration 2.
Type 4 Icing platforms and supports.	7 feet 3 inches See Illustration 2.
Type 5 Retractable platforms attached to permanent structures.	When not in use, use the clearance requirements for a platform of its height.
Type 6 **Platforms that are a combination** of Types 1 through 3. (Only Types 1 through 3 platforms can be combined.)	**Platforms may be combined** if the Type 1 platform has a level surface no more than 4 feet 8 inches from the track centerline to the face of the platform wall with which it is combined.

Illustration 2 - Minimum Side Clearances for Platforms

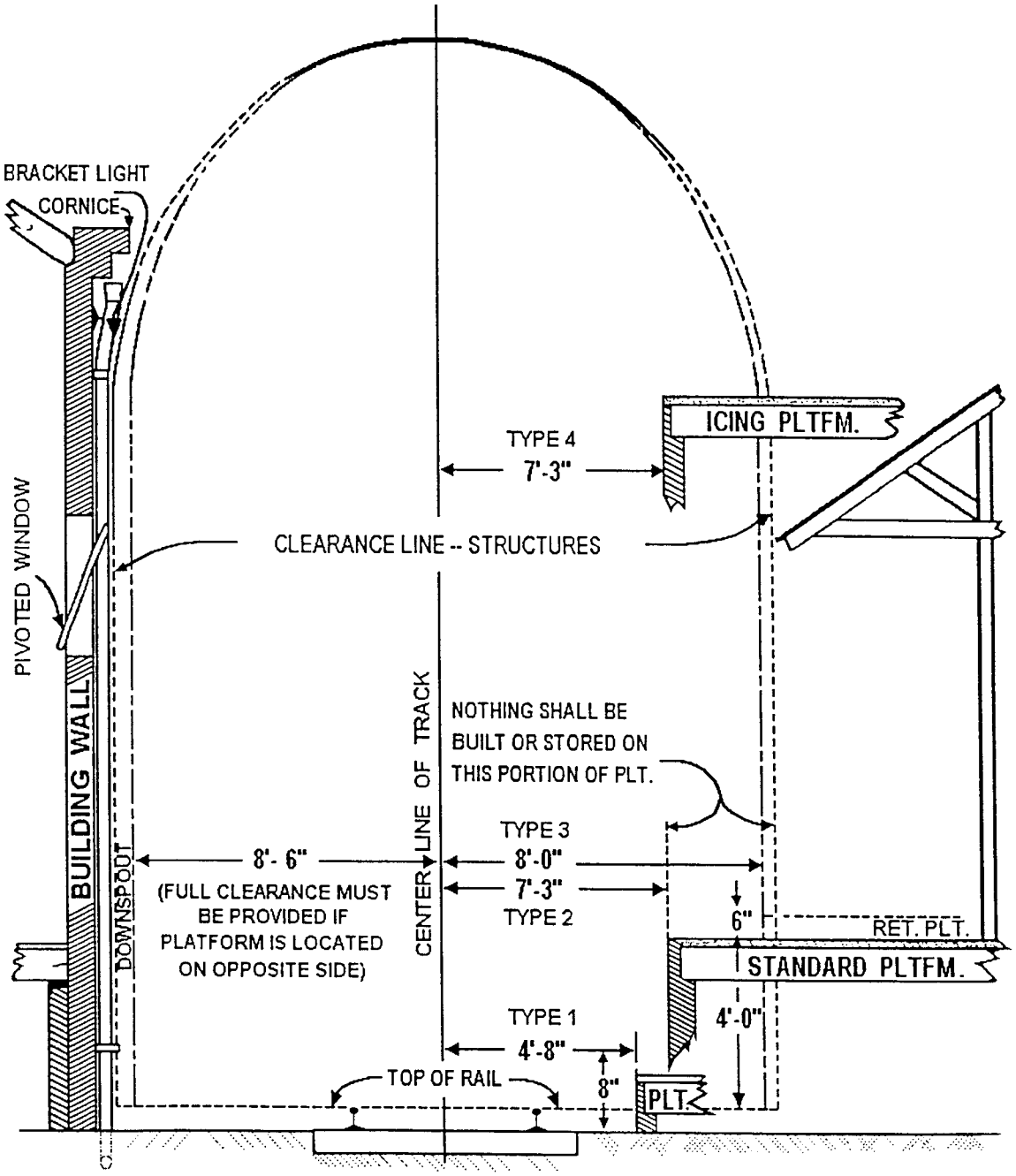

Table 3 - Minimum Side Clearances for Bridges, Tunnels and Related Structures

Exemption: • Except for handrail and water barrel clearances, the clearance requirements in Table 3 do not apply to bridge decks where railroad employees couple or uncouple cars on a switching lead unless the department approves them.

Note: • The requirements for filing a variance are located in the Safety and health core rules, chapter 296-350 WAC, and WISHA appeals, penalties and other procedural rules.

If your side clearance requirement involves:	**Then the minimum side clearance requirements between the track centerline and the bridge, tunnel or related structure are:**
Bridge and tunnel sides - lower section	8 feet
Bridge and tunnel sides - upper section	Defined by the half-circumference of a circle whose: • Radius is 8 feet **AND**

If your side clearance requirement involves:	Then the minimum side clearance requirements between the track centerline and the bridge, tunnel or related structure are:
	• Center is located on a line perpendicular to the track's centerline and 14 feet 6 inches above the top of the highest rail. • See Illustration 3.
Related structures on bridges and in tunnels - lower section structures (or portions of them) that are no more than 4 feet above the top of the rail. For example: • Refuge platforms on bridges and trestles. • Water columns, oil columns, and block signals. • Cattle chutes.	Defined by lines extending: • 5 feet laterally from the track centerline to a point level with the top of the rail and then diagonally upward to another point 4 feet above the top of the rail **AND** • 8 feet laterally from the track centerline to a point 4 feet above the top of the rail. • See Illustration 3A. The shaded portion of the illustration designates the area that must be free of refuge platforms, water columns, oil columns, block signals and cattle chutes.
Hand rails and water barrels	7 feet 6 inches
Fences of cattle guards	6 feet 9 inches

Illustration 3 - Minimum Side Clearances for Bridges, Tunnels and Related structures

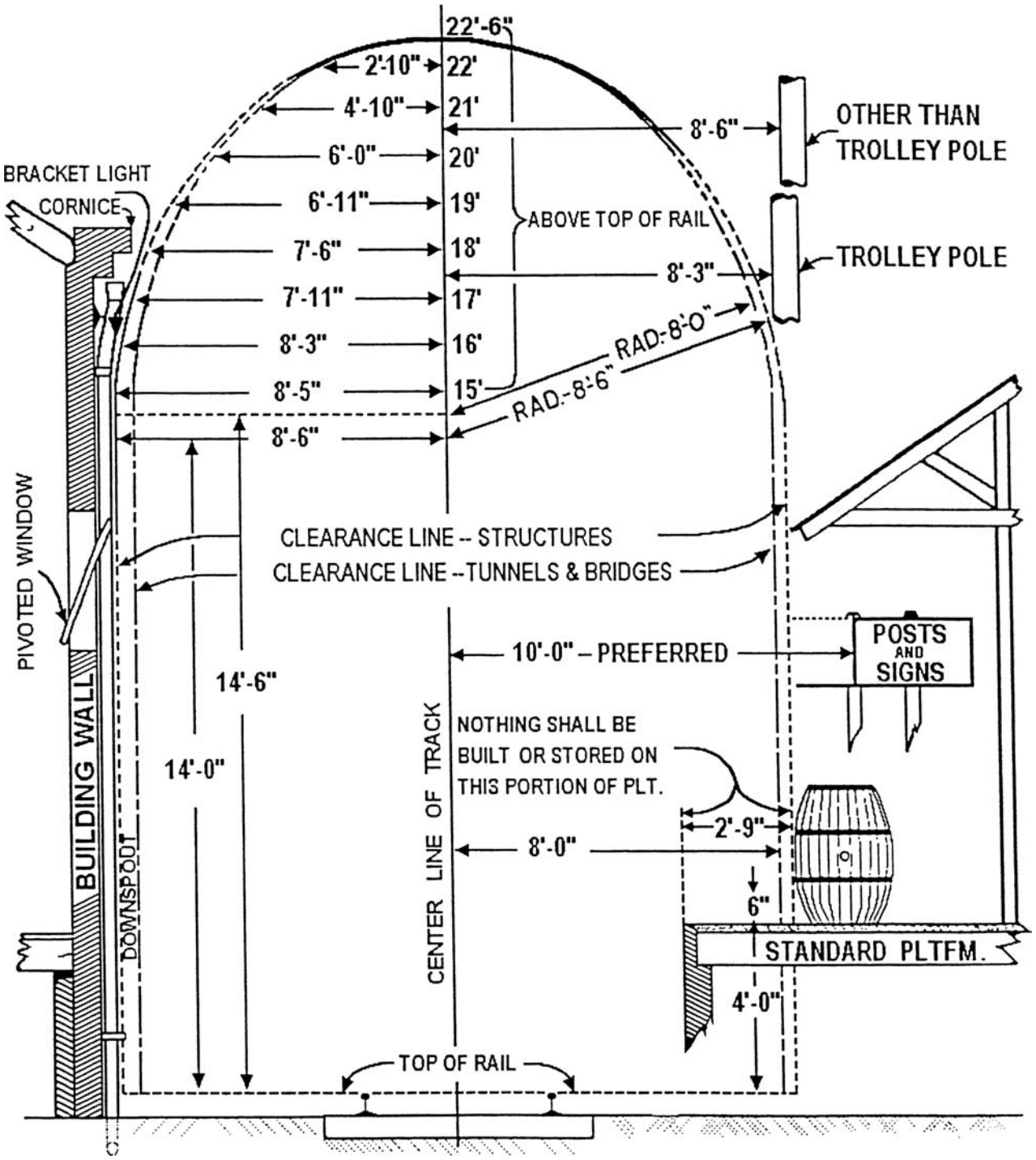

Illustration 3A - Minimum Side Clearance for Certain Structures in or on the Lower Sections of Bridges and Tunnels

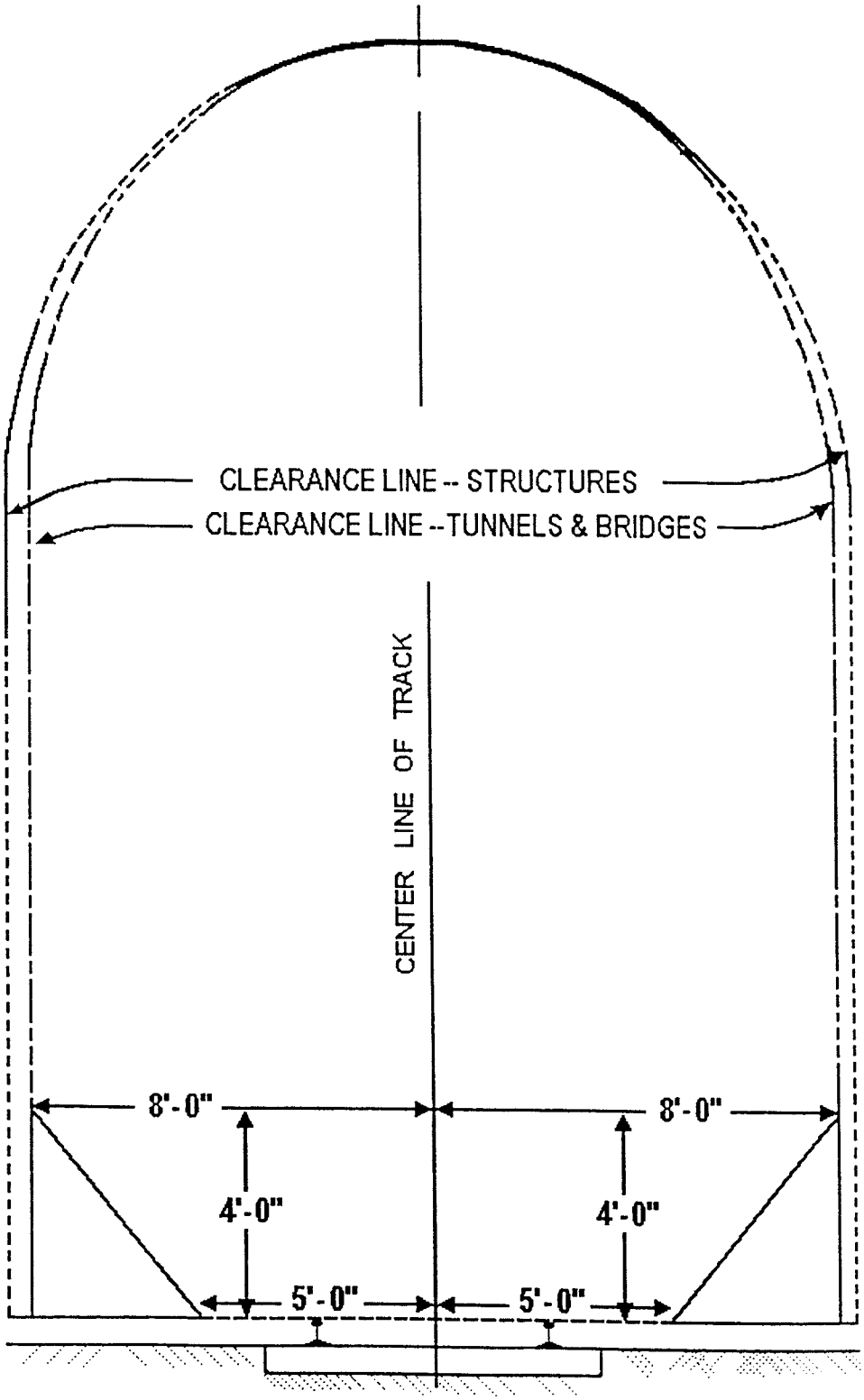

Table 4 - Other Minimum Side Clearance Requirements*

Note:
- The department must approve all minimum clearances for car pulling units and related structures.
- The requirements for filing a variance are located in the Safety and health core rules, chapter 296-350 WAC, and the WISHA appeals, penalties and other procedural rules.

If your side clearance requirement involves:	Then the minimum side clearance requirements from the track centerline are:
Type A Engine house and car repair shop doors.	7 feet 6 inches
Type B Interlocking mechanism, switch boxes, and other similar devices projecting no more than 4 feet above the top of the rail.	3 feet
Type C Poles supporting trolley contact.	8 feet 3 inches
Type D Signals and switch stands no more than 3 feet high and located between tracks where it is not possible to allow other clearances required in this chapter.	6 feet
Type E Signals and switch stands other than those described in Type B and Type D.	8 feet
Type F Material, merchandise, inventory, storage bins or equipment stacked or stored on ground or platforms adjacent to tracks.	8 feet 6 inches **Note:** This requirement does not apply to: • Railroad maintenance operations • Emergency situations • Local conditions that make compliance impossible.
Type G Space adjacent to curved track.	Increased to equal tangent track clearances. As a general rule, side clearances on curved track should be increased 1-1/2" for each degree of curvature.

*Table 4 does not have an accompanying illustration.

[Statutory Authority: RCW 49.17.010, [49.17].040, and [49.17].050. 02-17-106, § 296-860-20050, filed 8/21/02, effective 10/1/02.]

WAC 296-860-20060 Maintain clearances between tracks.
You must:
- Comply with the track clearance requirements in Table 5.

Table 5 - Minimum Standard Gauge Track Clearances

If your track clearance involves:	Then the minimum clearance requirements between centerlines of standard gauge parallel tracks are:
Main or passing tracks used for transporting cars, locomotives, motors, or like equipment	14 feet
Any tracks adjacent to main or passing tracks	15 feet
Team, house, or industry tracks	13 feet
Yard tracks	14 feet
Ladder and other tracks	20 feet

Note: The following illustration will help you understand the track clearance requirements discussed in this section and WAC 296-860-20080 regulating narrow gauge rail operations.

STANDARD GAUGE TRACK CLEARANCES

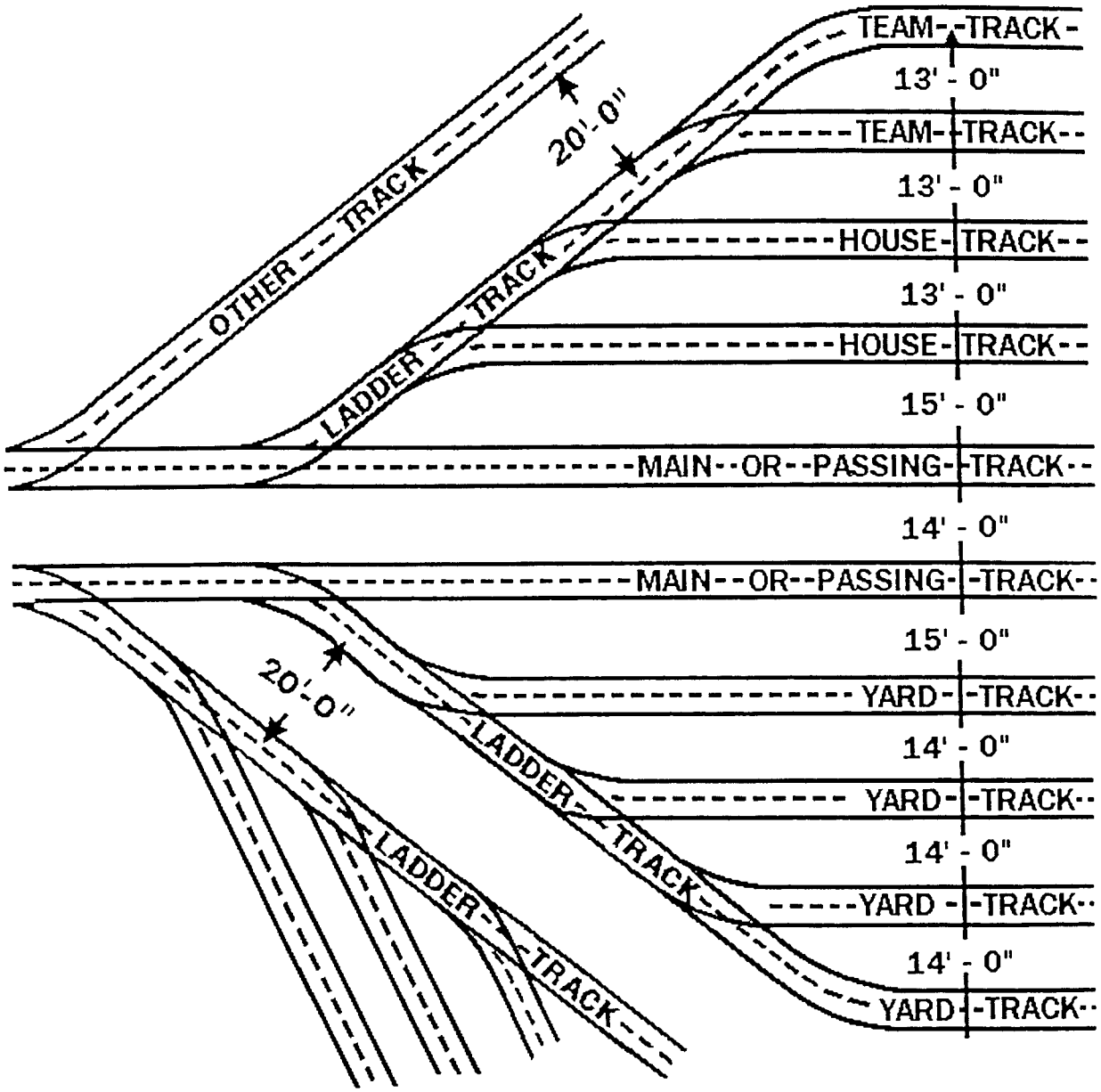

[Statutory Authority: RCW 49.17.010, [49.17].040, and [49.17].050. 02-17-106, § 296-860-20060, filed 8/21/02, effective 10/1/02.]

WAC 296-860-20070 Move excessive height or width rail car loads with care.

Note: This section regulates rail cars whose dimensions exceed ten feet ten inches wide by fifteen feet six inches high.

You must:

• Make sure your yard supervisor is given advanced notice regarding the arrival of any excess height or width cars so they can safeguard any employees working in the yard.

• Make sure no one is allowed to ride on the:

– Roof of any excessive height car

– Side of any excessive width car

– Side of any car with a load extending more than five feet five inches from the car's centerline.

[Statutory Authority: RCW 49.17.010, [49.17].040, and [49.17].050. 02-17-106, § 296-860-20070, filed 8/21/02, effective 10/1/02.]

WAC 296-860-20080 Follow these requirements to conduct narrow gauge rail operations.

You must:

• Base your clearance measurements upon your widest narrow gauge cars.

• Make sure the distance between the cars and objects on narrow gauge track is equal to or greater than the distance required between ten foot ten inch wide cars and other cars or objects on standard gauge track.

• Comply with all other applicable requirements in this chapter.

[Statutory Authority: RCW 49.17.010, [49.17].040, and [49.17].050. 02-17-106, § 296-860-20080, filed 8/21/02, effective 10/1/02.]

WAC 296-860-300 Definitions. The following definitions apply to this chapter.

Car width - Twice the distance from the centerline of a railroad car to its extreme outside part.

Common carrier - All railroads, railroad companies, street railroads, street railroad companies, corporations, partnerships, persons, cities or towns that own, operate, manage, or control any public use enterprise within Washington state that transports people or property for hire.

Department - The Washington state department of labor and industries.

Emergency - Any unforeseen occurrence that endangers life, limb, or property.

Icing platforms - Structures used to ice, precool, heat, ventilate or service private railroad cars that handle commodities requiring these services.

Over-crossing - Any point or place where a highway, road, or ramp carrying vehicular traffic crosses a private rail yard or track by passing above it.

Overhead clearance - The perpendicular distance between the top of the highest rail and the lowest point of an overhead structure or obstruction.

Private rail operation - A nonrailroad company operating railroad facilities, structures, tracks and equipment in the company's yard or plant. Chapter 296-860 WAC applies to:

• Any equipment, facility or structure owned or operated by the company

AND

• The construction and reconstruction of tracks or structures adjacent to any facility or structure owned or operated by the company.

Railroad - Every public use railroad, other than street railroads, operated to transport people or property for hire. This definition also includes all bridges, ferries, tunnels, equipment, switches, spurs, tracks, stations, and terminal facilities of every kind that are used, operated, controlled, or owned by or in connection with any such public use railroad.

Side clearance - The shortest distance between the centerline of a track and a structure or other track side obstructions such as downspouts, ladders, equipment, piles of material or inventory, etc.

Track clearance - The shortest distance between the centerlines of adjacent railroad tracks.

Walkways - Pathways located alongside or in the vicinity of a railroad track, or on a trestle or bridge, providing space so a private railroad employee can perform duties associated with the track, trestle, or bridge.

[Statutory Authority: RCW 49.17.010, [49.17].040, and [49.17].050. 02-17-106, § 296-860-300, filed 8/21/02, effective 10/1/02.]

Chapter 296-863 WAC

FORKLIFTS AND OTHER POWERED INDUSTRIAL TRUCKS

WAC

296-863-10005 Scope.
296-863-200 Design, construction, and equipment.
296-863-20005 Make sure PITs meet design and construction requirements.
296-863-20010 Meet these requirements when modifying or altering PITs.
296-863-20015 Make sure PITs are properly labeled.
296-863-20020 Protect operators from falling objects.
296-863-20025 Provide fall protection on order pickers.
296-863-20030 Provide directional lights on PITs when required.
296-863-20035 Make sure liquefied petroleum gas (LPG) fueled PITs meet these requirements.
296-863-20040 Meet these requirements when converting gasoline fuel PITs to liquefied petroleum gas (LPG) fuel.
296-863-300 Inspection, repair, maintenance, and servicing.
296-863-30005 Make sure PITs are in safe working condition.
296-863-30010 Inspect your PITs.
296-863-30015 Meet these requirements when repairing PITs.
296-863-30020 Maintain your PITs properly.
296-863-30025 Service gasoline fueled PITs safely.
296-863-30030 Service liquefied petroleum gas (LPG) fueled PITs safely.
296-863-30035 Make sure battery charging areas are safe.
296-863-30040 Service batteries for electric PITs safely.
296-863-400 Operations.
296-863-40005 Protect employees around PITs.
296-863-40010 Operate PITs safely.
296-863-40015 Make sure PIT loads are carried safely.
296-863-40020 Meet these requirements when the operator leaves the normal operating position.
296-863-40025 Meet these requirements when operating near railroad tracks.
296-863-40030 Meet this requirement when using motorized hand trucks.
296-863-40035 Meet these requirements when using elevators.
296-863-40040 Meet these requirements when using dockboards (bridge plates).
296-863-40045 Meet these requirements when loading or unloading railroad cars with a PIT.
296-863-40050 Meet these requirements when loading or unloading highway trucks with PITs.
296-863-40055 Meet these additional requirements when operating liquefied petroleum gas (LPG) fueled PITs.
296-863-40060 Make sure work platforms and PITs used to lift people meet these requirements.
296-863-40065 Operate PITs using elevated work platforms safely.
296-863-500 Hazardous (classified) locations.
296-863-50005 Use the appropriate PITs in hazardous (classified) locations.
296-863-600 Training.
296-863-60005 Make sure PIT operators are trained.
296-863-60010 Retrain PIT operators as required.
296-863-60015 Evaluate PIT operators performance.
296-863-700 Definitions.

WAC 296-863-10005 Scope. This chapter applies to powered industrial trucks that use electric motors or internal combustion engines. This includes, but is not limited to:

• Fork trucks.
• Forklifts.
• Tractors.
• Platform lift trucks.
• Motorized hand trucks.
• Other specialized industrial trucks.

Definition:

A powered industrial truck (PIT) is a mobile, power-driven vehicle used to carry, push, pull, lift, stack, or tier material.

Exemption: This chapter does not apply to:
- Compressed air-powered industrial trucks.
- Nonflammable compressed gas-operated industrial trucks.
- Vehicles covered by chapter 296-307 WAC, Safety standards for agriculture.
- Vehicles intended primarily for earth moving or over-the-road hauling.

[Statutory Authority: RCW 49.17.010, 49.17.040, 49.17.050, 49.17.060. 04-19-051, § 296-863-10005, filed 9/14/04, effective 2/1/05.]

WAC 296-863-200 Design, construction, and equipment.

Summary:

Your responsibility:

To make sure PITs are properly designed, constructed, and equipped.

You must:

Design and construction

Make sure PITs meet design and construction requirements

WAC 296-863-20005.

Meet these requirements when modifying or altering PITs

WAC 296-863-20010.

Labeling

Make sure PITs are properly labeled

WAC 296-863-20015.

Equipment

Protect operators from falling objects

WAC 296-863-20020.

Provide fall protection on order pickers

WAC 296-863-20025.

Provide directional lights when required

WAC 296-863-20030.

Liquefied petroleum gas (LPG) PITs

Make sure liquefied petroleum gas (LPG) fueled PITs meet these requirements

WAC 296-863-20035.

Meet these requirements when converting gasoline fuel PITs to liquefied petroleum gas (LPG) fuel

WAC 296-863-20040.

[Statutory Authority: RCW 49.17.010, 49.17.040, 49.17.050, 49.17.060. 04-19-051, § 296-863-200, filed 9/14/04, effective 2/1/05.]

WAC 296-863-20005 Make sure PITs meet design and construction requirements.

You must:

• Make sure PITs meet American National Standards Institute (ANSI) design and construction requirements.

• Make sure PITs manufactured **before** March 1, 2000, meet the requirements of ANSI B56.1-1969, Safety Standards for Powered Industrial Trucks.

• Make sure PITs manufactured **on or after** March 1, 2000, meet the requirements of ANSI B56.1-1993, Safety Standards for Powered Industrial Trucks.

• Make sure rough terrain forklift trucks manufactured on or after January 1, 2005, meet the design and construction requirements of ANSI B56.6-1992, Safety Standard for Rough Terrain Forklift Trucks.

Note: There may be a nameplate on the PIT or a statement in the instruction manual indicating that the PIT meets the requirement of the appropriate ANSI standard. If in doubt, check with the manufacturer.

ANSI B56.1-1993 and B56.6-1992 are available by:

– Purchasing copies by writing:

American National Standards Institute

11 West 42nd Street

New York, NY 10036

OR

– Contacting the ANSI website at www.ansi.org.

[Statutory Authority: RCW 49.17.010, 49.17.040, 49.17.050, 49.17.060. 04-19-051, § 296-863-20005, filed 9/14/04, effective 2/1/05.]

WAC 296-863-20010 Meet these requirements when modifying or altering PITs.

You must:

Have written approval from the PIT manufacturer before making any modifications to the PIT that:

– Change the relative position of the various parts of the PIT from what they were when originally received from the manufacturer.

– Add extra parts not provided by the PIT manufacturer.

– Eliminate any parts.

– Affect capacity or safe operation.

Exemption: This does not apply to converting PITs from gasoline to LPG fuel.

You must:

• Make sure any modifications or additions to the PIT are shown on the plates, tags, or decals to reflect any changes in the PITs:

– Capacity.

– Operation.

– Maintenance instructions.

[Statutory Authority: RCW 49.17.010, 49.17.040, 49.17.050, 49.17.060. 04-19-051, § 296-863-20010, filed 9/14/04, effective 2/1/05.]

WAC 296-863-20015 Make sure PITs are properly labeled.

You must:

• Make sure all PIT nameplates as well as any stickers, stencils or marks that relate to the stability and safety of the PIT are:

– In place.

– Legible.

Note: PITs should have a nameplate installed by the manufacturer that contains at least the following information:

– Model and serial number.

– Approximate weight of the PIT.

– Certification that the manufacturer has met the mandatory requirements of ANSI B56.1 Safety Standards for Powered Industrial Trucks.

– Type designation to show the PIT meets the applicable requirements of a nationally recognized testing laboratory.

You must:

• Make sure PITs approved for hazardous (classified) locations have a label or some other identifying mark indicating acceptance by a nationally recognized testing laboratory.

• Make sure PITs with front-end attachments, including fork extensions, are marked to:

– Identify the attachment.

– Show the approximate combined weight of the PIT and attachment.

– Show the maximum capacity of the PIT with attachments at their highest elevation and the load laterally centered.

[Statutory Authority: RCW 49.17.010, 49.17.040, 49.17.050, 49.17.060. 04-19-051, § 296-863-20015, filed 9/14/04, effective 2/1/05.]

WAC 296-863-20020 Protect operators from falling objects.

You must:

• Use an overhead guard to protect operators from falling objects such as small packages, boxes, and bagged material.

Exemption: A high lift rider truck may be operated without the guard, providing all of the following conditions are met:

- Vertical movement of the lifting mechanism is restricted to seventy-two inches (1800 mm) or less from the ground.
- The high lift rider truck will operate only in an area where:
  - The top of a tiered load will not be more than one hundred twenty inches (3000 mm) high.
  - The bottom of a tiered load will not be more than seventy-two inches (1800 mm) high.
  - Only stable loads are handled.
  - The operator is protected from objects falling from high stack areas.

Note: The overhead guard is not intended to withstand the impact of a maximum capacity load of the PIT.

You must:

• Equip all high lift rider trucks with overhead guards that meet the design and construction requirements of American National Standards Institute (ANSI) B56.1-1993, Safety Standards for Powered Industrial Trucks.

• Use a vertical load backrest extension to keep all or any part of the load from falling backwards towards the operator if the load presents a hazard.

[Statutory Authority: RCW 49.17.010, 49.17.040, 49.17.050, 49.17.060. 04-19-051, § 296-863-20020, filed 9/14/04, effective 2/1/05.]

WAC 296-863-20025 Provide fall protection on order pickers.

You must:

• Make sure order pickers have either:

– Standard guardrails on all open sides;

OR

– A safety harness and lanyard that are connected to a tie off point that has been approved by the PIT manufacturer.

• Make sure personal fall arrest equipment meets the requirements of WAC 296-24-87035, Appendix C—Personal fall arrest systems.

[Statutory Authority: RCW 49.17.010, 49.17.040, 49.17.050, 49.17.060. 04-19-051, § 296-863-20025, filed 9/14/04, effective 2/1/05.]

WAC 296-863-20030 Provide directional lights on PITs when required.

You must:

• Provide PITs with directional lighting if the general lighting is less than two lumens per square foot.

Note:
- Lighting levels can be measured with a light meter.
- Conversion information: One foot-candle = one lumen incident per square foot = 10.76 lux.

[Statutory Authority: RCW 49.17.010, 49.17.040, 49.17.050, 49.17.060. 04-19-051, § 296-863-20030, filed 9/14/04, effective 2/1/05.]

WAC 296-863-20035 Make sure liquefied petroleum gas (LPG) fueled PITs meet these requirements.

You must:

• Use fuel containers that meet **either** of the following minimum requirements:

– A U.S. Department of Transportation (USDOT) approved container authorized for LP-gas service that has a minimum service pressure of two hundred forty pounds per square inch gage (psig);

OR

– A container Type 250 that has a design pressure of 312.5 psig.

• Make sure fuel containers do not use variable liquid-level gages that require venting fuel to the atmosphere.

• Make sure the fuel system of PITs **used inside buildings:**

– Has an approved automatic shutoff valve, located ahead of the inlet of the gas-air mixer, that will stop the flow of fuel to the mixer if the engine stops;

AND

– Use not more than two LP-gas fuel containers.

• Make sure the fuel system of PITs **used outdoors** has an approved automatic shutoff valve, located ahead of the inlet of the gas-air mixer, that will stop the flow of fuel to the mixer if both:

– The ignition is OFF.

– The engine is not running.

Note: You may use an atmospheric type regulator (zero governor) as a shutoff valve if the PIT is used outdoors.

[Statutory Authority: RCW 49.17.010, 49.17.040, 49.17.050, 49.17.060. 04-19-051, § 296-863-20035, filed 9/14/04, effective 2/1/05.]

WAC 296-863-20040 Meet these requirements when converting gasoline fuel PITs to liquefied petroleum gas (LPG) fuel.

You must:

• Make sure PITs originally approved to use gasoline for fuel that are then converted to LPG fuel:

– Meet the requirements for LP or LPS designated PITs;

AND

– Are converted using only approved equipment.

Definitions:

• **LP** refers to liquefied petroleum gas-powered trucks that, in addition to meeting all the requirements for type G trucks, have minimum acceptable safeguards against inherent fire hazards.

• **LPS** refers to liquefied petroleum gas powered trucks that in addition to meeting the requirements for LP type trucks, have additional exhaust, fuel, and electrical systems safeguards.

Note:
- Tables 1, 2, and 3 list the types of PITs and the locations where they can be used safely.
- The description of the component parts of the conversion system and the recommended method of installation on specific PITs are contained in the "*Listed by Report*" provided by the testing laboratory.

[Statutory Authority: RCW 49.17.010, 49.17.040, 49.17.050, 49.17.060. 04-19-051, § 296-863-20040, filed 9/14/04, effective 2/1/05.]

WAC 296-863-300 Inspection, repair, maintenance, and servicing.

Summary:

Your responsibility:

To make sure PITs are kept in safe condition and properly serviced.

References:
- Appropriate respiratory protection may need to be used when operating PITs. See chapter 296-841 WAC, Respiratory hazards, for more information.
- Appropriate PPE may need to be worn. See WAC 296-800-160 in the *Safety and Health Core Rules* for more information.

You must:

Inspect, repair and maintain PITs

Make sure PITs are in safe working condition

WAC 296-863-30005.

Inspect your PITs

WAC 296-863-30010.

Meet these requirements when repairing PITs
WAC 296-863-30015.
Maintain your PITs properly
WAC 296-863-30020.
Service your PITs
Service gasoline fueled PITs safely
WAC 296-863-30025.
Service liquefied petroleum gas (LPG) fueled PITs safely
WAC 296-863-30030.
Make sure battery charging areas are safe
WAC 296-863-30035.
Service batteries for electric PITs safely
WAC 296-863-30040.

[Statutory Authority: RCW 49.17.010, 49.17.040, 49.17.050, 49.17.060. 04-19-051, § 296-863-300, filed 9/14/04, effective 2/1/05.]

WAC 296-863-30005 Make sure PITs are in safe working condition.

You must:

• Remove any PIT from service that is not in safe operating condition.

• Immediately remove PITs from service that have any of the following problems, and do not return them to service until the cause of the problem has been eliminated:

– A leak in the fuel system.

– A clogged water muffler screen or other muffler part.

– An exhaust system that is emitting hazardous sparks or flames.

– A part that is hotter than its normal operating temperature thus creating a hazardous condition.

[Statutory Authority: RCW 49.17.010, 49.17.040, 49.17.050, 49.17.060. 04-19-051, § 296-863-30005, filed 9/14/04, effective 2/1/05.]

WAC 296-863-30010 Inspect your PITs.

You must:

• Inspect PITs according to the manufacturer's instructions.

• Inspect PITs at these times:

– Daily before being put into service;

AND

– After each shift, if the PIT is used on a continuous (twenty-four-hour) basis.

Note: You can designate someone on the off-going shift, on-coming shift, or some other person to do the inspection.

You must:

• Report and correct any deficiencies noted during the inspection.

[Statutory Authority: RCW 49.17.010, 49.17.040, 49.17.050, 49.17.060. 04-19-051, § 296-863-30010, filed 9/14/04, effective 2/1/05.]

WAC 296-863-30015 Meet these requirements when repairing PITs.

You must:

• Make sure repairs are made by authorized persons.

• Make sure replacement parts are equivalent to the parts used in the original design.

• Make sure repairs are not made in Class I, II, or III locations. See Tables 1, 2, and 3 for more information.

Definitions:

Class I locations are areas where flammable gases or vapors are or may be present in the air in quantities sufficient to produce explosive or ignitible mixtures.

Class II locations are areas where the presence of combustible dust could be sufficient to produce explosions.

Class III locations are areas where the presence of easily ignitible fibers are suspended in the air but are not in large enough quantities to produce ignitible mixtures.

You must:

• Make sure fuel and ignition system repairs that involve fire hazards are made only in locations designated for such repairs.

• Disconnect the battery before starting repairs to a PIT electrical system.

• Close the fuel container shutoff valve before repairing an LP-gas fueled PIT in a garage.

Exemption: The container shutoff valve may be left open if it is necessary to run the engine.

[Statutory Authority: RCW 49.17.010, 49.17.040, 49.17.050, 49.17.060. 04-19-051, § 296-863-30015, filed 9/14/04, effective 2/1/05.]

WAC 296-863-30020 Maintain your PITs properly.

You must:

• Maintain PITs according to this chapter and the manufacture's instructions.

• Keep PITs:

– Clean.

– Free of excess lint, oil, and grease.

• Take appropriate precautions to protect employees from the hazards associated with the cleaning agents or solvents used.

– Precautions could include methods such as ventilation.

• Make sure solvents used for cleaning PITs have a flash point of 100° Fahrenheit or more.

[Statutory Authority: RCW 49.17.010, 49.17.040, 49.17.050, 49.17.060. 04-19-051, § 296-863-30020, filed 9/14/04, effective 2/1/05.]

WAC 296-863-30025 Service gasoline fueled PITs safely.

You must:

• Handle and store liquid fuels, such as gasoline and diesel fuel, according to the National Fire Protection Association Flammable and Combustible Liquids Code (NFPA No. 30-1996).

Note: National Fire Protection Association codes are available by:
Purchasing copies by writing:
National Fire Protection Association
1 Batterymarch Park
Quincy, MA 02169-7471
OR
Contacting the NFPA website at www.nfpa.org.

You must:

• Stop the engine before filling a fuel tank.

• Avoid spilling fuel during servicing.

• Make sure you do **not** use open flames to check the gasoline level in fuel tanks.

• Do the following before restarting the engine after fueling:

– Put on the fuel tank cap.

– Make sure spilled oil or fuel is completely washed away or evaporated.

[Statutory Authority: RCW 49.17.010, 49.17.040, 49.17.050, 49.17.060. 04-19-051, § 296-863-30025, filed 9/14/04, effective 2/1/05.]

WAC 296-863-30030 Service liquefied petroleum gas (LPG) fueled PITs safely.

You must:

• Handle and store liquefied petroleum gas fuel according to the National Fire Protection Association Storage and Handling of Liquefied Petroleum Gases (NFPA No. 58-1998).

• Shut down the engine while fueling.

• Fuel PITs equipped with permanently mounted fuel containers outdoors.

• Make sure filling fuel containers from industrial bulk storage containers is done at least:

– Ten feet from the nearest masonry-walled building.

– Twenty-five feet from the nearest building or other construction.

– Twenty-five feet from any building opening.

• Make sure PITs are stored or serviced inside garages only when:

– There are no leaks in the fuel system;

AND

– The fuel tanks are not filled beyond the maximum filling density specified in WAC 296-24-47505 (12)(a), Storage and handling of liquefied petroleum gases.

Reference: See chapter 296-24 WAC, Part F-1, for LPG charging equipment requirements and maximum filling density and LPG service stations.

[Statutory Authority: RCW 49.17.010, 49.17.040, 49.17.050, 49.17.060. 04-19-051, § 296-863-30030, filed 9/14/04, effective 2/1/05.]

WAC 296-863-30035 Make sure battery charging areas are safe.

You must:

• Make sure battery charging areas are designated and provided with all of the following:

– Means to flush and neutralize spilled electrolyte.

– Fire protection.

– Ventilation that is adequate to disperse fumes from gassing batteries.

• Prohibit smoking in battery charging areas.

• Take precautions to prevent open flames, sparks, or electric arcs in battery charging areas.

• Protect battery charging equipment from being damaged by PITs.

• Provide at least one of the following to handle batteries:

– Conveyor.

– Overhead hoist.

– Other equivalent material handling equipment.

[Statutory Authority: RCW 49.17.010, 49.17.040, 49.17.050, 49.17.060. 04-19-051, § 296-863-30035, filed 9/14/04, effective 2/1/05.]

WAC 296-863-30040 Service batteries for electric PITs safely.

You must:

• Make sure PITs are properly positioned with the brake on before charging or changing batteries.

• Make sure you do **not** use open flames to check the electrolyte level in storage batteries.

• Do the following when charging batteries:

– Make sure vent caps are functioning.

– Open the battery or compartment covers to dissipate heat.

– Pour acid into water, never pour water into acid.

• Provide a carboy tilter or siphon to handle electrolyte.

• Keep tools and other metallic objects away from the top of uncovered batteries.

• Make sure reinstalled batteries are properly positioned and secured.

[Statutory Authority: RCW 49.17.010, 49.17.040, 49.17.050, 49.17.060. 04-19-051, § 296-863-30040, filed 9/14/04, effective 2/1/05.]

WAC 296-863-400 Operations.

Summary:

Your responsibility:

To operate your PITs safely.

You must:

General operations

Protect employees around PITs

WAC 296-863-40005.

Operate PITs safely

WAC 296-863-40010.

Make sure PIT loads are carried safely

WAC 296-863-40015.

Meet these requirements when the operator leaves the normal operating position

WAC 296-863-40020.

Meet these requirements when operating near railroad tracks

WAC 296-863-40025.

Special operations

Meet this requirement when using motorized hand trucks

WAC 296-863-40030.

Meet these requirements when using elevators

WAC 296-863-40035.

Meet these requirements when using dockboards (bridge plates)

WAC 296-863-40040.

Meet these requirements when loading or unloading railroad cars with a PIT

WAC 296-863-40045.

Meet these requirements when loading or unloading highway trucks with PITs

WAC 296-863-40050.

Liquefied petroleum gas (LPG) fueled PITs

Meet these additional requirements when operating liquefied petroleum gas (LPG) fueled PITs

WAC 296-863-40055.

Personnel lifting

Make sure work platforms and PITs used to lift people meet these requirements

WAC 296-863-40060.

Operate PITs using elevated work platforms safely

WAC 296-863-40065.

[Statutory Authority: RCW 49.17.010, 49.17.040, 49.17.050, 49.17.060. 04-19-051, § 296-863-400, filed 9/14/04, effective 2/1/05.]

WAC 296-863-40005 Protect employees around PITs.

You must:

• Make sure operators use restraint devices, such as seat-belts or lap-bars, when they are provided on the PIT.

• Make sure you do not allow people:

– Under the elevated part of any PIT, whether it is loaded or empty;

– To put any part of their body between the uprights of the mast;

OR

– Outside the running lines of the PIT.

• Make sure you do not allow unauthorized people to ride on PITS.

• Make sure people riding on PITs have a safe place to ride.

• Make sure you do not allow stunt driving or horseplay.

• Make sure PITs are not driven up to anyone in front of a bench or other fixed object.

• Make sure access to fire aisles, stairways, and fire equipment is kept clear.

• Make sure there is sufficient headroom under overhead installations such as lights, pipes, and sprinkler systems to safely operate PITs.

Reference: PIT operations may cause the airborne concentration levels of carbon monoxide gas to increase. You have to keep the concentration levels below the levels specified in chapter 296-841 WAC, Respiratory hazards.

[Statutory Authority: RCW 49.17.010, 49.17.040, 49.17.050, 49.17.060. 04-19-051, § 296-863-40005, filed 9/14/04, effective 2/1/05.]

WAC 296-863-40010 Operate PITs safely.

You must:

• Operate PITs according to the manufacturer's instructions.

• Make sure PIT operators do all of the following:

– Obey all traffic regulations, including authorized workplace speed limits.

– Yield the right of way to ambulances, fire trucks, and other vehicles in emergency situations.

– Keep a safe distance of approximately three truck lengths from the PIT ahead.

– Look in the direction they are going and keep a clear view of their path of travel.

– Slow down and sound the horn at cross aisles and other locations where vision is obstructed.

– Do not pass other PITs traveling in the same direction at intersections, blind spots, or other dangerous locations.

– Keep a safe distance from the edge of ramps or platforms while on any of the following:

■ Elevated docks.

■ Elevated platforms.

■ Freight cars.

• Make sure operators keep PITs under control at all times, including doing all of the following:

– Drive at a speed that allows the PIT to be stopped safely.

– Drive more slowly on wet or slippery floors.

– Reduce speed to a safe level while turning.

– Avoid driving over loose objects.

[Statutory Authority: RCW 49.17.010, 49.17.040, 49.17.050, 49.17.060. 04-19-051, § 296-863-40010, filed 9/14/04, effective 2/1/05.]

WAC 296-863-40015 Make sure PIT loads are carried safely.

You must:

(1) Make sure loads are stable, safe and within the rated load capacity of the PIT.

(2) Do both of the following when picking up a load:

• Place the load engaging means under the load as far as possible.

• Tilt the mast carefully backwards to stabilize the load.

(3) Make sure not to tilt the load engaging means forward when it is elevated unless:

• Picking up a load;

OR

• Depositing a load on a rack or stack.

(4) Do both of the following when traveling with a load:

• Keep the load trailing if it obstructs the operator's forward view.

• Travel with the load upslope when climbing or descending slopes of more than ten percent.

(5) Do both of the following when climbing a slope:

• Tilt the load and load engagement means backwards if necessary to stabilize the load;

AND

• Raise the load and load engagement means only as far as necessary to clear the surface.

(6) Make sure PITS with attachments are operated as partially loaded trucks, even if they are **not** carrying a load.

[Statutory Authority: RCW 49.17.010, 49.17.040, 49.17.050, 49.17.060. 04-19-051, § 296-863-40015, filed 9/14/04, effective 2/1/05.]

WAC 296-863-40020 Meet these requirements when the operator leaves the normal operating position.

You must:

• Make sure operators do the following when getting off the PIT:

– Fully lower the load engaging means.

– Neutralize the controls.

– Set the brakes.

• Make sure operators do the following when leaving a PIT unattended:

– Fully lower the load engaging means.

– Neutralize the controls.

– Shut off power.

– Set the brakes.

– Block the wheels, if parked on an incline.

Note: A PIT is unattended when the operator:

• Is more than twenty-five feet away;

OR

• Can not see the PIT.

[Statutory Authority: RCW 49.17.010, 49.17.040, 49.17.050, 49.17.060. 04-19-051, § 296-863-40020, filed 9/14/04, effective 2/1/05.]

WAC 296-863-40025 Meet these requirements when operating near railroad tracks.

You must:

• Make sure PITs are driven diagonally across railroad tracks, whenever possible.

• Make sure PITs are parked eight feet six inches or more from the center of any railroad tracks.

[Statutory Authority: RCW 49.17.010, 49.17.040, 49.17.050, 49.17.060. 04-19-051, § 296-863-40025, filed 9/14/04, effective 2/1/05.]

WAC 296-863-40030 Meet this requirement when using motorized hand trucks.

You must:

• Make sure motorized hand trucks enter elevators and other confining areas with the load end forward.

[Statutory Authority: RCW 49.17.010, 49.17.040, 49.17.050, 49.17.060. 04-19-051, § 296-863-40030, filed 9/14/04, effective 2/1/05.]

WAC 296-863-40035 Meet these requirements when using elevators.

You must:

• Do both of the following when driving PITs onto an elevator:

– Approach slowly.

– Enter the elevator squarely after the elevator car is leveled.

• Do all the following after the PIT is positioned on the elevator:

– Neutralize the controls.

– Shut off the power.

– Set the brakes.

[Statutory Authority: RCW 49.17.010, 49.17.040, 49.17.050, 49.17.060. 04-19-051, § 296-863-40035, filed 9/14/04, effective 2/1/05.]

WAC 296-863-40040 Meet these requirements when using dockboards (bridge plates).

You must:

• Make sure dockboards are not overloaded:

– Make sure they are strong enough to carry the load imposed on them.

– Make sure loads do not exceed the dockboard's rated capacity.

• Do the following when using dockboards:

– Drive slowly and carefully over dockboards.

– Properly secure dockboards before driving on them.

• Make sure powered dockboards meet the design and construction requirements of U.S. Department of Commerce Commercial Standard CS 202-56 (1961) "Industrial Lifts and Hinged Loading Ramps."

• Do the following when using portable dockboards:

– Use anchors or other devices that will prevent slipping.

– Make sure they have handholds or other effective means for safe handling.

[Statutory Authority: RCW 49.17.010, 49.17.040, 49.17.050, 49.17.060. 04-19-051, § 296-863-40040, filed 9/14/04, effective 2/1/05.]

WAC 296-863-40045 Meet these requirements when loading or unloading railroad cars with a PIT.

You must:

• Check the railroad car flooring for breaks or weakness before driving on it.

• Set the brakes and use wheel stops or other recognized positive protection to keep railcars from moving:

– During loading or unloading operations;

OR

– While dockboards (bridge plates) are in position.

• Meet these requirements when using PITs to open or close freight car doors:

– The PIT has to have an approved device specifically designed to open and close doors.

– The device has to be designed so that force will be applied to the door parallel to door travel.

– The PIT operator has to be trained to use the device and have full view of the operation.

– People must be kept clear while the door is being moved.

[Statutory Authority: RCW 49.17.010, 49.17.040, 49.17.050, 49.17.060. 04-19-051, § 296-863-40045, filed 9/14/04, effective 2/1/05.]

WAC 296-863-40050 Meet these requirements when loading or unloading highway trucks with PITs.

You must:

• Check the truck or trailer flooring for breaks or weakness before driving on it.

• Prevent movement of trucks or trailers during loading or unloading by:

– Setting the brakes;

AND

– Chocking or blocking the wheels.

Exemptions:
- You can use mechanical means instead of wheel chocks or blocks to secure the trailer to the loading dock.
- Wheel chocks or blocks are not required when:
  - – The mechanical means prevents the trailer from moving away from the dock.
  - – The mechanical equipment is used and maintained as recommended by the manufacturer.
  - – Damaged mechanical equipment is immediately removed from service.

Note: You may need to use fixed jacks to keep a semi-trailer that is not coupled to a tractor from up ending during loading or unloading.

[Statutory Authority: RCW 49.17.010, 49.17.040, 49.17.050, 49.17.060. 04-19-051, § 296-863-40050, filed 9/14/04, effective 2/1/05.]

WAC 296-863-40055 Meet these additional requirements when operating liquefied petroleum gas (LPG) fueled PITs.

You must:

• Make sure you do not park PITs near:

– Sources of heat, open flames, or similar ignition sources;

OR

– Open pits, such as service pits, that do not have adequate ventilation.

• Make sure PITs stored inside a garage do not have:

– A leak in the fuel system.

– Fuel containers filled beyond the maximum filling capacity.

Reference: See WAC 296-24-47505(12), Storage and handling of liquefied petroleum gases, for maximum filling capacities.

[Statutory Authority: RCW 49.17.010, 49.17.040, 49.17.050, 49.17.060. 04-19-051, § 296-863-40055, filed 9/14/04, effective 2/1/05.]

WAC 296-863-40060 Make sure work platforms and PITs used to lift people meet these requirements.

You must:

• Make sure work platforms:

– Are securely fastened to the lifting carriage or forks.

– Have standard guardrails and toeboards on all sides.

• Guard the area between the platform and the PIT mast to prevent employee contact with chains or other shear points.

• Make sure PITs used to elevate a work platform have a lift mechanism that can not drop faster than one hundred thirty five feet per minute in the event of a system failure.

• Make sure the lifting carriage or forks are prevented from tilting.

Note: Examples of how this may be accomplished are the use of:
- A control lever that prevents the inadvertent movement; or
- Use of a strap or other device to hold the control lever in position.

You must:

• Make sure PITs with controls (vertical only or horizontal and vertical) that can be elevated with the lifting carriage or forks, have a way for people on the platform to shut off power to the PIT.

Note: You can find the minimum requirements for standard railings of various types of construction in WAC 296-24-75011, Railings, toeboards and cover specifications.

[Statutory Authority: RCW 49.17.010, 49.17.040, 49.17.050, 49.17.060. 04-19-051, § 296-863-40060, filed 9/14/04, effective 2/1/05.]

WAC 296-863-40065 Operate PITs using elevated work platforms safely.

You must:

• Make sure the PIT operator:

– Is attending the lift equipment when workers are on the platform.

– Is in the normal operating position while raising or lowering the platform.

Note: A PIT is unattended when the operator:
- Is more than twenty-five feet away;

OR
- Cannot see the PIT.

You must:

• Make sure the operator does **not** move the PIT from one point to another while workers are on the platform.

– The operator may inch or maneuver the PIT at very low speed with workers on the platform.

[Statutory Authority: RCW 49.17.010, 49.17.040, 49.17.050, 49.17.060. 04-19-051, § 296-863-40065, filed 9/14/04, effective 2/1/05.]

WAC 296-863-500 Hazardous (classified) locations.

Summary:

Your responsibility:

To use PITs safely in hazardous (classified) locations.

You must:

Use the appropriate approved PITs in hazardous (classified) locations

WAC 296-863-50005.

[Statutory Authority: RCW 49.17.010, 49.17.040, 49.17.050, 49.17.060. 04-19-051, § 296-863-500, filed 9/14/04, effective 2/1/05.]

WAC 296-863-50005 Use the appropriate PITs in hazardous (classified) locations.

You must:

• Make sure PITS are used in hazardous (classified) locations as follows:

– PITS authorized to be used in Class 1 locations are shown in Table 1, Approved PIT Use in Class 1 Locations.

– PITS authorized to be used in Class 2 locations are shown in Table 2, Approved PIT Use in Class 2 Locations.

– PITS authorized to be used in Class 3 locations are shown in Table 3, Approved PIT Use in Class 3 Locations.

• PITS authorized to be used in unclassified locations are:

– Approved PITS designated as Type D, E, G, or LP;

AND

– PITs that meet the requirements of a Type D, E, G, or LP PIT.

Definitions:

• An unclassified location is an area that is not designated as a Class 1, 2, or 3 location.

• Designations means a code used to show the different types of hazardous (classified) locations where PITs can be safely used:

- D refers to trucks that are diesel engine powered that have minimum safeguards against inherent fire hazards.

- DS refers to diesel powered trucks that, in addition to meeting all the requirements for type D trucks, are provided with additional safeguards to the exhaust, fuel and electrical systems.

- DY refers to diesel powered trucks that have all the safeguards of the DS trucks and, in addition, any electrical equipment is completely enclosed. They are equipped with temperature limitation features.

- E refers to electrically powered trucks that have minimum acceptable safeguards against inherent fire hazards.

- ES refers to electrically powered trucks that, in addition to all of the requirements for the E trucks, have additional safeguards to the electrical system to prevent emission of hazardous sparks and to limit surface temperatures.

- EE refers to electrically powered trucks that have, in addition to all of the requirements for the E and ES type trucks, have their electric motors and all other electrical equipment completely enclosed.

- EX refers to electrically powered trucks that differ from E, ES, or EE type trucks in that the electrical fittings and equipment are designed, constructed and assembled to be used in atmospheres containing flammable vapors or dusts.

- G refers to gasoline powered trucks that have minimum acceptable safeguards against inherent fire hazards.

- GS refers to gasoline powered trucks that are provided with additional exhaust, fuel, and electrical systems safeguards.

- LP refers to liquefied petroleum gas-powered trucks that, in addition to meeting all the requirements for type G trucks, have minimum acceptable safeguards against inherent fire hazards.

- LPS refers to liquefied petroleum gas-powered trucks that in addition to meeting the requirements for LP type trucks, have additional exhaust, fuel, and electrical systems safeguards.

Note:
- Tables 1, 2, and 3 show the type of approved PITs that can be used in the appropriate divisions and groups.
- PITS cannot be used in divisions and groups that do not have a PIT designation listed.
- Approved PITs will be marked or labeled with the designation of the PIT. See WAC 296-863-20010, Make sure PITs are properly labeled.

Table 1
Approved PIT Use in Class 1 Locations

Class 1 Locations in which flammable gases or vapors are, or may be, present in the air in quantities sufficient to produce explosive or ignitable mixtures.							
Division 1 Conditions exist continuously, intermittently, or periodically under normal operating conditions.				**Division 2** Conditions may occur due to accidentally, for example, due to a puncture of a storage drum.			
Group A	**Group B**	**Group C**	**Group D**	**Group A**	**Group B**	**Group C**	**Group D**
Acetylene	Hydrogen	Ethyl ether	Acetone Alcohols Benzene Gasoline Lacquer solvent	Acetylene	Hydrogen	Ethyl ether	Acetone Alcohols Benzene Gasoline Lacquer solvent
No PIT type can be used	No PIT type can be used	No PIT type can be used	Use this PIT type: **EX**	No PIT type can be used	No PIT type can be used	No PIT type can be used	Use this PIT type: **DS** **DY** **ES** **EE** **EX** **GS** **LPS**

Table 2
Approved PIT Use in Class 2 Locations

Class 2 Locations which are hazardous because of the presence of combustible dust.					
Division 1 Explosive mixture may be present under normal operating conditions, or where failure of equipment may cause the condition to exist simultaneously with arcing or sparking of electrical equipment, or where dusts of an electrically conducting nature may be present.			**Division 2** Explosive mixture not normally present, but where deposits of dust may cause heat rise in electrical equipment, or where such deposits may be ignited by arcs or sparks from electrical equipment.		
Group E	**Group F**	**Group G**	**Group E**	**Group F**	**Group G**
Metal dust	Carbon black Coal dust Coke dust	Grain dust Flour dust Starch dust Organic dust	Metal dust	Carbon black Coal dust Coke dust	Grain dust Flour dust Starch dust Organic dust
No PIT type can be used	Use this PIT type: **EX**	Use this PIT type: **EX**	No PIT type can be used	Use this PIT type: **EX** **DY** **EE**	Use this PIT type: **DS** **DY** **ES** **EE** **EX** **GS** **LPS**

Table 3
Approved PIT Use in Class 3 Locations

Class 3 Locations where easily ignitable fibers or flyings are present but not likely to be in suspension in quantities sufficient to produce ignitable mixtures.	
Division 1	**Division 2**
Locations in which easily ignitable fibers or materials producing combustible flyings are handled, manufactured, or used.	Locations in which easily ignitable fibers are stored or handled (except in the process of manufacture).
Use this PIT type: **DY** **EE** **EX**	Use this PIT type: **DS** **DY** **E** **ES** **EE** **EX** **GS** **LPS**

[Statutory Authority: RCW 49.17.010, 49.17.040, 49.17.050, 49.17.060. 04-19-051, § 296-863-50005, filed 9/14/04, effective 2/1/05.]

WAC 296-863-600 Training.
Summary:
Your responsibility:
To make sure PIT operators are competent.
You must:
Operator training
Make sure PIT operators are trained
WAC 296-863-60005.
Retrain PIT operators as required
WAC 296-863-60010.
Evaluate PIT operators performance
WAC 296-863-60015.

[Statutory Authority: RCW 49.17.010, 49.17.040, 49.17.050, 49.17.060. 04-19-051, § 296-863-600, filed 9/14/04, effective 2/1/05.]

WAC 296-863-60005 Make sure PIT operators are trained.
You must:
• Make sure employees successfully complete an operator training program before operating PITs. The only time a trainee can operate a PIT is:
– Under the direct supervision of a person who has the knowledge, training, and experience to train and evaluate operators;
AND
– When operating the PIT does not endanger the trainee or other employees.
• Make sure training is done by you or someone you designate that has the knowledge, training, and experience to:
– Conduct the training;
AND
– Evaluate trainee competence.
• Make sure your operator training program consists of:
– Formal instruction.
■ Such as lecture and discussion, interactive computer learning, video tapes, and written material.
– Practical training.
■ Such as demonstrations done by the trainer and practical exercises performed by trainees.
– Evaluation of trainee performance.
• Make sure the initial operator training program covers the subjects in Table 4, Required Training Topics.

Note: If an operator has previously received training specified in Table 4, Required Training Topics, additional training in that topic is not required if:
- The training was appropriate to the PIT and working conditions in your workplace;

AND
- The employee has passed a PIT performance evaluation within the last three years.

Table 4
Required Training Topics

Topics related to powered industrial truck	**Topics related to your workplace**
• Operating instructions,	• Surface conditions where the PIT will be operated
• Warnings and precautions for the types of PIT the operator will be authorized to operate	• Composition of loads to be carried and load stability
• Differences between the PIT and the automobile	• Load manipulation, stacking, and unstacking
• PIT controls and instrumentation: Where they are located, what they do, and how they work	• Pedestrian traffic in areas where the PIT will be operated
• Engine or motor operation	• Narrow aisles and other restricted places where the PIT will be operated
• Steering and maneuvering	• Use of door opening and closing devices
• Visibility (including restrictions due to loading)	• Hazardous (classified) locations where the PIT will be operated
• Fork and attachment adaptation, operation, and use limitations	• Ramps and other sloped surfaces that could affect the PITs stability
• PIT capacity	• Closed environments and other areas where insufficient ventilation or poor PIT maintenance could cause a buildup of carbon monoxide or diesel exhaust
• PIT stability	• Other unique or potentially hazardous environmental conditions in the workplace that could affect safe operation
• Any PIT inspection and maintenance that the operator will be required to perform	
• Refueling	
• Charging and recharging of batteries	
• Operating limitations	

Topics related to powered industrial truck	Topics related to your workplace
• Any other operating instructions, warnings, or precautions listed in the operator's manual for the types of PIT that the employee is being trained to operate	

You must:

• Keep written records of operator training and evaluations that include the following information:

– Name of the operator.

– Date of the training.

– Date of the evaluation.

– Name of the person giving the training or evaluation.

[Statutory Authority: RCW 49.17.010, 49.17.040, 49.17.050, 49.17.060. 04-19-051, § 296-863-60005, filed 9/14/04, effective 2/1/05.]

WAC 296-863-60010 Retrain PIT operators as required.

You must:

• Provide PIT operators refresher training if **any** of the following occur:

– The operator is involved in an accident or near-miss incident.

– The operator is seen operating the PIT in an unsafe manner.

– An evaluation shows the operator is not operating the PIT safely.

– The operator is assigned to drive a different type or modified PIT.

– Conditions in the workplace change that could affect safe operation of the PIT.

Note: Refresher training is required only in those topics where the operator has been found deficient.

[Statutory Authority: RCW 49.17.010, 49.17.040, 49.17.050, 49.17.060. 04-19-051, § 296-863-60010, filed 9/14/04, effective 2/1/05.]

WAC 296-863-60015 Evaluate PIT operators performance.

You must:

• Evaluate PIT operators performance at each of these times:

– As part of their initial training program.

– After refresher training to determine the effectiveness of the training.

– At least once every three years.

[Statutory Authority: RCW 49.17.010, 49.17.040, 49.17.050, 49.17.060. 04-19-051, § 296-863-60015, filed 9/14/04, effective 2/1/05.]

WAC 296-863-700 Definitions.

ANSI is an acronym for the American National Standards Institute.

Authorized person (maintenance) means a person who has been designated to perform maintenance on a PIT.

Authorized person (training) means a person approved or assigned by the employer to perform training for powered industrial truck operators.

Approved means listed or approved by a nationally recognized testing laboratory or a federal agency that issues approvals for equipment such as the Mine Safety and Health Administration (MSHA); the National Institute for Occupational Safety and Health (NIOSH); Department of Transportation; or U.S. Coast Guard, which issue approvals for such equipment.

Bridge plate (dockboard) means a device used to span the distance between rail cars or highway vehicles and loading platforms.

Classified location or hazardous location means areas that could be hazardous because of explosive or flammable atmospheres. These locations are broken down into the following categories:

• Class I locations are areas where flammable gases or vapors are or may be present in the air in quantities sufficient to produce explosive or ignitible mixtures.

• Class II locations are areas where the presence of combustible dust could be sufficient to produce explosions.

• Class III locations are areas where the presence of easily ignitible fibers are suspended in the air but are not in large enough quantities to produce ignitible mixtures.

Counterweight means a weight used to counteract or the load being carried by the truck, or to increase the load carrying capacity of a truck.

Designations means a code used to show the different types of hazardous (classified) locations where PITs can be safely used:

• **D** refers to trucks that are diesel engine powered that have minimum safeguards against inherent fire hazards.

• **DS** refers to diesel powered trucks that, in addition to meeting all the requirements for type D trucks, are provided with additional safeguards to the exhaust, fuel and electrical systems.

• **DY** refers to diesel powered trucks that have all the safeguards of the DS trucks and, in addition, any electrical equipment is completely enclosed. They are equipped with temperature limitation features.

• **E** refers to electrically powered trucks that have minimum acceptable safeguards against inherent fire hazards.

• **ES** refers to electrically powered trucks that, in addition to all of the requirements for the E trucks, have additional safeguards to the electrical system to prevent emission of hazardous sparks and to limit surface temperatures.

• **EE** refers to electrically powered trucks that have, in addition to all of the requirements for the E and ES type trucks, have their electric motors and all other electrical equipment completely enclosed.

• **EX** refers to electrically powered trucks that differ from E, ES, or EE type trucks in that the electrical fittings and equipment are designed, constructed and assembled to be used in atmospheres containing flammable vapors or dusts.

• **G** refers to gasoline powered trucks that have minimum acceptable safeguards against inherent fire hazards.

• **GS** refers to gasoline powered trucks that are provided with additional exhaust, fuel, and electrical systems safeguards.

• **LP** refers to liquefied petroleum gas-powered trucks that, in addition to meeting all the requirements for type G trucks, have minimum acceptable safeguards against inherent fire hazards.

• **LPS** refers to liquefied petroleum gas powered trucks that in addition to meeting the requirements for LP type trucks, have additional exhaust, fuel, and electrical systems safeguards.

Electrolyte means a chemical, usually acid, that is mixed with water to produce electricity.

Flammable liquid means any liquid having a flashpoint below 100°F (37.8°C), except any mixture having components with flashpoints of 100°F (37.8°C) or higher, the total of which make up 99% or more of the total volume of the mixture.

Flashpoint means the minimum temperature at which a liquid gives off enough vapor to ignite.

Front-end attachment means a device that is attached to the forks or lifting device of the truck.

Lanyard means a flexible line of webbing, rope, or cable used to secure a harness to an anchor point.

Listed by report means a reporting listing the field assembly, installation procedures, or both, for a UL listed product that does not have generally recognized installation requirements.

Liquefied petroleum gas means any gas that is composed predominantly of the following hydrocarbons, or mixtures of them; propane, propylene, butanes (normal butane or iso-butane), and butylenes.

Load engaging means a device attached to a powered industrial truck and used to manipulate or carry a load.

Motorized hand truck means a powered truck with wheeled forks designed to go under or between pallets and is controlled by a walking or riding operator.

Nationally recognized testing laboratory means an organization recognized by the Occupational Safety and Health Administration that conducts safety tests on equipment and materials.

Order picker means a truck controlled by an operator who is stationed on a platform that moves with the load engaging means.

Powered industrial truck (PIT) means a mobile, power-driven vehicle used to carry, push, pull, lift, stack, or tier material.

Rough terrain forklift truck means a truck intended to be used on unimproved natural terrain and at construction sites.

Safety harness (full body harness) means a configuration of connected straps to distribute a fall arresting force over at least the thighs, shoulders and pelvis, with provisions for attaching a lanyard, lifeline, or deceleration devices.

Tie-off point (anchorage) means a secure point to attach a lanyard that meets the requirements of WAC 296-24-87035, Appendix—C Personal fall arrest systems.

Vertical load backrest extension means a device that extends vertically from the fork carriage frame.

[Statutory Authority: RCW 49.17.010, 49.17.040, 49.17.050, 49.17.060. 04-19-051, § 296-863-700, filed 9/14/04, effective 2/1/05.]

Chapter 296-864 WAC

SPLIT (MULTIPIECE) RIM AND SINGLE-PIECE RIM WHEELS

WAC

296-864-100 Scope.
296-864-200 Wheel components.
296-864-20005 Make sure wheel components are compatible.
296-864-20010 Make sure rim wheels are serviced safely.
296-864-20015 Make sure damaged wheel components are not used.

SPLIT (MULTIPIECE) RIM AND SINGLE-PIECE RIM WHEELS

296-864-300 Restraint devices.
296-864-30005 Use a restraining device.
296-864-30010 Make sure the restraint device meets these requirements.
296-864-30015 Provide charts or rim manuals.
296-864-400 Service split rim wheels safely.
296-864-40005 Establish a safe operating procedure for split rim wheels.
296-864-40010 Follow these procedures for demounting split rim wheels.
296-864-40015 Follow these procedures when working on split rim wheels and components.
296-864-40020 Follow these procedures for inflating split rim wheels.
296-864-500 Service single-piece rim wheels safely.
296-864-50005 Establish a safe operating procedure for single-piece rim wheels.
296-864-50010 Follow these procedures for demounting single-piece rim wheels.
296-864-50015 Follow these procedures when working on single-piece rim wheels and components.
296-864-50020 Follow these procedures for inflating single-piece rim wheels.
296-864-600 Employee training.
296-864-60005 Train employees who service rim wheels.
296-864-60010 Make sure employees demonstrate and retain the ability to service rim wheels safely.
296-864-700 Definitions.

WAC 296-864-100 Scope.

Note: This rule is intended to protect employees from hazards associated with the exploding separation of rim wheel components.

This chapter applies to the protection of employees who service split rim wheels and single-piece rim wheels used on large vehicles. For example:

• Trucks;
• Tractors;
• Trailers;
• Buses;

AND

• Off-road machines.

Exemption: This chapter does not apply to the servicing of rim wheels used on:

• Automobiles;

OR

• Tires designated as light truck (LT).

Note: The tire designation can be found on the sidewall of the tire.

Definition:

Split rim wheel or **multipiece rim wheel,** means a wheel made up of two or more parts. One of the parts is a side ring or locking ring that holds the tire on the wheel when the tire is inflated.

Single-piece rim wheel means a single part holds the tire, forms part of the air chamber and is the point where the wheel is attached to the vehicle axle.

[Statutory Authority: RCW 49.17.010, 49.17.040, 49.17.050, 49.17.060. 04-20-079, § 296-864-100, filed 10/5/04, effective 2/1/05.]

WAC 296-864-200 Wheel components.

Summary:

Your responsibility:

To make sure rim wheels are serviced safely.

You must:

Make sure wheel components are compatible
WAC 296-864-20005.

Make sure rim wheels are serviced safely
WAC 296-864-20010.

Make sure damaged wheel components are not used
WAC 296-864-20015.

[Statutory Authority: RCW 49.17.010, 49.17.040, 49.17.050, 49.17.060. 04-20-079, § 296-864-200, filed 10/5/04, effective 2/1/05.]

WAC 296-864-20005 Make sure wheel components are compatible.

You must:

• Make sure tires and rim wheels are compatible before assembly.

• Make sure split rim wheel components are not interchanged, except as provided in:

– The Occupational Safety and Health Administration (OSHA) and National Highway Traffic Safety Administration (NHTSA) charts, "*Demounting and Mounting Procedures for Truck/Bus Tires*" and "*Multi-Piece Rim Matching Chart*,"

OR

– The rim manual for that component.

Note: Reprints of these charts, "*Demounting and Mounting Procedures for Truck/Bus Tires*" and "*Multi-Piece Rim Matching Chart*," are available:

- Through the WISHA Training and Outreach office at 360-902-5638.
- Through the OSHA area offices. The address and telephone number of the nearest OSHA area office can be obtained by looking in the local telephone directory under U.S. Government, U.S. Department of Labor, Occupational Safety and Health Administration.
- From the OSHA website at http://www.osha.gov/pls/publications/pubindex.continue.
- Through U.S. Postal Service at:
  Publications Office
  U.S. Department of Labor
  Room N3101
  Washington D.C. 20210.
  Telephone: 202-523-9667.

[Statutory Authority: RCW 49.17.010, 49.17.040, 49.17.050, 49.17.060. 04-20-079, § 296-864-20005, filed 10/5/04, effective 2/1/05.]

WAC 296-864-20010 Make sure rim wheels are serviced safely.

You must:

• Inspect split rim wheel components and single-piece wheels prior to assembly.

• Make sure the following are free of any dirt, surface rust, scale or loose or flaked rubber build-up prior to mounting and inflation:

– Rim flanges;

– Rim gutters;

– Rings;

– Bead seating surfaces;

AND

– The bead areas of tires.

• Make sure you do not heat any rim wheels at any time.

• Make sure you do not repair any rim wheel that is:

– Cracked;

– Broken;

– Bent;

OR

– Damaged.

Note: Repair includes activities such as striking with a hammer and heating rim wheel components.

• Provide and make sure that an air line assembly consisting of the following components is used for inflating tires:

– A clip-on chuck;

– An in-line valve with a pressure gauge or a presettable regulator;

AND

– A sufficient length of hose between the clip-on chuck and the in-line valve, if one is used, to allow the employee to stand outside the trajectory.

Reference: For additional requirements relating to compressed air tools, see WAC 296-807-140, Compressed air tools, in portable power tools.

[Statutory Authority: RCW 49.17.010, 49.17.040, 49.17.050, 49.17.060. 04-20-079, § 296-864-20010, filed 10/5/04, effective 2/1/05.]

WAC 296-864-20015 Make sure damaged wheel components are not used.

You must:

• Make sure any wheel or wheel component that is bent out of shape, pitted from corrosion, broken or cracked is:

– Not used;

– Marked or tagged unserviceable;

AND

– Removed from the service area.

• Replace damaged or leaky valves.

[Statutory Authority: RCW 49.17.010, 49.17.040, 49.17.050, 49.17.060. 04-20-079, § 296-864-20015, filed 10/5/04, effective 2/1/05.]

SPLIT (MULTIPIECE) RIM AND SINGLE-PIECE RIM WHEELS

WAC 296-864-300 Restraint devices.

Your responsibility:

To make sure your restraint devices are safe.

You must:

Use a restraining device
WAC 296-864-30005.

Make sure the restraint device meets these requirements
WAC 296-864-30010.

Provide charts or rim manuals
WAC 296-864-30015.

[Statutory Authority: RCW 49.17.010, 49.17.040, 49.17.050, 49.17.060. 04-20-079, § 296-864-300, filed 10/5/04, effective 2/1/05.]

WAC 296-864-30005 Use a restraining device.

You must:

• Use a restraining device for inflating tires on split rim wheels.

• Use a restraining device or barrier for inflating tires on single-piece wheels.

Exemption: A restraining device or barrier is not required for single-piece rim wheels, if the rim wheel will be bolted onto a vehicle during inflation.

[Statutory Authority: RCW 49.17.010, 49.17.040, 49.17.050, 49.17.060. 04-20-079, § 296-864-30005, filed 10/5/04, effective 2/1/05.]

WAC 296-864-30010 Make sure the restraint device meets these requirements.

You must:

• Make sure the restraining device or barrier can withstand a rim wheel separation that occurs at one hundred fifty percent of the maximum tire pressure specified.

• Make sure the restraining devices and barriers will contain any components that may be thrown out during a wheel separation of any rim wheel.

• Make sure restraining devices and barriers are visually inspected:

– Prior to each day's use;

AND

– After any separation of the rim wheel components or sudden release of air.

• Make sure any restraining device or barrier that shows damage is immediately removed from service. Examples of damage include:

– Cracks at welds;

– Cracked or broken components;

– Bent or sprung components caused by mishandling, abuse, tire explosion or rim wheel separation;

– Pitting of components due to corrosion;

OR

– Other structural damage that would decrease its effectiveness.

• Make sure restraining devices or barriers removed from service are not used until they are repaired and reinspected.

• Make sure restraining devices or barriers that need structural repair are not used until they are certified by either:

– The manufacturer;

OR

– A registered professional engineer.

Note: The certification needs to show that the barrier can withstand a force of one hundred fifty percent of the maximum tire pressure in the event of wheel separation.

[Statutory Authority: RCW 49.17.010, 49.17.040, 49.17.050, 49.17.060. 04-20-079, § 296-864-30010, filed 10/5/04, effective 2/1/05.]

WAC 296-864-30015 Provide charts or rim manuals.

You must:

• Provide current charts or rim manuals containing instructions for the types of wheels being serviced in the service area.

• Provide and use only tools recommended in the rim manual for the specific type of rim wheel being serviced.

[Statutory Authority: RCW 49.17.010, 49.17.040, 49.17.050, 49.17.060. 04-20-079, § 296-864-30015, filed 10/5/04, effective 2/1/05.]

WAC 296-864-400 Service split rim wheels safely.

Your responsibility:

To establish and use procedures to service split rim wheels safely.

You must:

Establish a safe operating procedure for split rim wheels WAC 296-864-40005.

Follow these procedures for demounting split rim wheels WAC 296-864-40010.

Follow these procedures when working on split rim wheels and components WAC 296-864-40015.

Follow these procedures for inflating split rim wheels WAC 296-864-40020.

[Statutory Authority: RCW 49.17.010, 49.17.040, 49.17.050, 49.17.060. 04-20-079, § 296-864-400, filed 10/5/04, effective 2/1/05.]

WAC 296-864-40005 Establish a safe operating procedure for split rim wheels.

You must:

• Establish a safe operating procedure for servicing split rim wheels that includes the procedures in WAC 296-864-40010 through 296-864-40020.

• Instruct employees in that procedure.

[Statutory Authority: RCW 49.17.010, 49.17.040, 49.17.050, 49.17.060. 04-20-079, § 296-864-40005, filed 10/5/04, effective 2/1/05.]

WAC 296-864-40010 Follow these procedures for demounting split rim wheels.

You must:

• Follow the relevant procedures in Table 1, Procedures for Deflating Split Rim Wheels.

Table 1
Procedures for Demounting Split Rim Wheels

During these times	Then
Demounting rim wheels.	Make sure tires are completely deflated before demounting by removal of the valve core.
During either of the following situations: – The tire has been driven underinflated at eighty percent or less of its recommended pressure; **OR** – There is obvious or suspected damage to the tire or wheel components.	Deflate the tires completely by removing the valve core, before a rim wheel is removed from the axle.

[Statutory Authority: RCW 49.17.010, 49.17.040, 49.17.050, 49.17.060. 04-20-079, § 296-864-40010, filed 10/5/04, effective 2/1/05.]

WAC 296-864-40015 Follow these procedures when working on split rim wheels and components.

You must:

• Follow the relevant procedures in Table 2, Procedures for Working on Split Rim Wheels and Components.

Table 2
Procedures for Working on Split Rim Wheels and Components

During these times	Then
A split rim wheel is in a restraining device.	Make sure employees do not rest or lean any part of the body or equipment on or against the restraining device.
Assembly of the wheel and inflation of the tire.	Apply rubber lubricant to bead and rim mating surfaces, unless the tire or wheel manufacturer recommends against it.
After tire inflation.	Do both of the following: Inspect the tire and wheel components while still within the restraining device; **AND**

Table 2
Procedures for Working on Split Rim Wheels and Components

During these times	Then
	Make sure that they are properly seated and locked.
When adjusting the tire or wheel components.	Deflate the tire by removal of the valve core before the adjustment is made.

[Statutory Authority: RCW 49.17.010, 49.17.040, 49.17.050, 49.17.060. 04-20-079, § 296-864-40015, filed 10/5/04, effective 2/1/05.]

WAC 296-864-40020 Follow these procedures for inflating split rim wheels.

You must:

• Follow the relevant procedures in Table 3, Procedures for Inflating Split Rim Wheels.

Table 3
Procedures for Inflating Split Rim Wheels

During these times	Then
Split rim wheels are being inflated.	Make sure employees stay out of the trajectory.
When all of the following occur: A tire on a vehicle has more than eighty percent of the recommended pressure; **AND** Remote control inflation equipment is used; **AND** No employees are in the trajectory during inflation.	The tire may be inflated while the rim wheel is on the vehicle.
Assembly of the wheel and inflation of the tire.	Apply rubber lubricant to bead and rim mating surfaces, unless the tire or wheel manufacturer recommends against it.
Inflating tires outside of a restraining device.	Make sure you do not exceed 5 psi (pounds per square inch) to seat the bead.
The tire is pressurized.	Make sure you don't correct the seating of side and lock rings by hammering, striking or forcing the components.

Note:
- Employees should stay out of the trajectory as much as possible while installing the split rim wheel onto the vehicle.
- The trajectory may deviate from its expected path.

[Statutory Authority: RCW 49.17.010, 49.17.040, 49.17.050, 49.17.060. 04-20-079, § 296-864-40020, filed 10/5/04, effective 2/1/05.]

WAC 296-864-500 Service single-piece rim wheels safely.

Your responsibility:

To establish and use procedures to service single-piece rim wheels safely.

You must:

Establish a safe operating procedure for single-piece rim wheels

WAC 296-864-50005.

Follow these procedures for demounting single-piece rim wheels

WAC 296-864-50010.

Follow these procedures when working on single-piece rim wheel components

WAC 296-864-50015.

Follow these procedures for inflating single-piece rim wheels

WAC 296-864-50020.

[Statutory Authority: RCW 49.17.010, 49.17.040, 49.17.050, 49.17.060. 04-20-079, § 296-864-500, filed 10/5/04, effective 2/1/05.]

WAC 296-864-50005 Establish a safe operating procedure for single-piece rim wheels.

You must:

• Establish a safe operating procedure for servicing single-piece rim wheels that includes the procedures in WAC 296-864-50010 through 296-864-50020.

• Instruct employees in that procedure.

[Statutory Authority: RCW 49.17.010, 49.17.040, 49.17.050, 49.17.060. 04-20-079, § 296-864-50005, filed 10/5/04, effective 2/1/05.]

WAC 296-864-50010 Follow these procedures for demounting single-piece rim wheels.

You must:

• Follow the relevant procedures in Table 4, Procedures for Demounting Single-Piece Wheel Components.

Table 4
Procedures for Demounting Single-Piece Rim Wheels

During these times	Then
At all times.	Make sure mounting and demounting of the tire is done only from the narrow ledge side of the wheel.
When demounting rim wheels.	Make sure tires are completely deflated before demounting by removal of the valve core.

[Statutory Authority: RCW 49.17.010, 49.17.040, 49.17.050, 49.17.060. 04-20-079, § 296-864-50010, filed 10/5/04, effective 2/1/05.]

WAC 296-864-50015 Follow these procedures when working on single-piece rim wheels and components.

You must:

• Follow the relevant procedures in Table 5, Procedures for Working on Single-Piece Wheel Components.

Table 5
Procedures for Working on Single-Piece Rim Wheel Components

During these times	Then
At all times.	Avoid damaging the tire beads while mounting tires on wheels.

Table 5
Procedures for Working on Single-Piece Rim Wheel Components

At all times.	Make sure tires are mounted only on compatible wheels of matching bead diameter and width.
Before assembly of the rim wheel.	Apply rubber lubricant to bead and wheel mating surfaces, unless the tire or wheel manufacturer recommends against the use of any rubber lubricant.
When using a tire changing machine.	Make sure the tire is inflated only to the minimum pressure necessary to force the tire bead onto the rim ledge while on the tire changing machine.
When using a bead expander.	Make sure it is removed: – Before the valve core is installed; **AND** – As soon as the rim wheel becomes airtight (the tire bead slips onto the bead seat).

Note: You should not inflate tires above 40 psi to seat the bead.

[Statutory Authority: RCW 49.17.010, 49.17.040, 49.17.050, 49.17.060. 04-20-079, § 296-864-50015, filed 10/5/04, effective 2/1/05.]

WAC 296-864-50020 Follow these procedures for inflating single-piece rim wheels.

You must:

• Inflate tires only when contained within a restraining device or bolted on the vehicle with the lug nuts fully tightened.

• Make sure tires are not inflated when any flat, solid surface is in the trajectory and within one foot of the sidewall.

• Make sure employees stay out of the trajectory when inflating a tire.

• Make sure, when inflating tires, that the inflation pressure stamped in the sidewall isn't exceeded unless the manufacturer recommends a higher pressure.

• Make sure tires aren't inflated above the maximum pressure recommended by the manufacturer to seat the tire bead firmly against the rim flange.

[Statutory Authority: RCW 49.17.010, 49.17.040, 49.17.050, 49.17.060. 04-20-079, § 296-864-50020, filed 10/5/04, effective 2/1/05.]

WAC 296-864-600 Employee training.

Your responsibility:

To train employees to service split rim and single-piece rim wheels.

You must:

Train employees who service rim wheels

WAC 296-864-60005.

Make sure employees demonstrate and retain the ability to service rim wheels safely

WAC 296-864-60010.

[Statutory Authority: RCW 49.17.010, 49.17.040, 49.17.050, 49.17.060. 04-20-079, § 296-864-600, filed 10/5/04, effective 2/1/05.]

WAC 296-864-60005 Train employees who service rim wheels.

You must:

• Train all employees who service rim wheels.

• Make sure that employees do not service any rim wheel until they have been trained and instructed in:

– Correct procedures of servicing the type of wheel being worked on;

AND

– The safe operating procedures described in:

■ WAC 296-864-400, Service split rim wheels safely;

AND

■ WAC 296-864-500, Service single-piece rim wheels safely.

• Make sure the training program explains the hazards involved in servicing those rim wheels and the safety procedures to be followed.

• Make sure the training program includes, at a minimum, the applicable data from the:

– Charts;

– Rim manuals;

AND

– Contents of this standard.

[Statutory Authority: RCW 49.17.010, 49.17.040, 49.17.050, 49.17.060. 04-20-079, § 296-864-60005, filed 10/5/04, effective 2/1/05.]

WAC 296-864-60010 Make sure employees demonstrate and retain the ability to service rim wheels safely.

You must:

• Make sure that each employee demonstrates the ability to service rim wheels safely, including performing the following tasks for the specified type of rim wheel in Table 6.

Table 6
Required Training Tasks

Required Task	Split Rim	Single-Piece Rim
Demounting and deflation of tires.	X	X
Inspection and identification of the rim wheel components.	X	X
Hazards of mixing 16" and 16.5" tires and rims.		X
Mounting of tires.	X	X
Inflation of tires with a restraining device or other safeguard required by this section.	X	X
Use of the restraining device or barrier, and other equipment required by this section.	X	X
Handling of rim wheels.	X	X
Inflation of the tire when a rim wheel is mounted on a vehicle.		X
The hazards associated with standing in front of a split rim or single-piece rim wheel: – During inflation of the tire;	X	X

Table 6
Required Training Tasks

Required Task	Split Rim	Single-Piece Rim
– During inspection of the rim wheel following inflation; **AND** – Installation and removal of rim wheels.		

You must:

• Make sure any employee that is unable to read the charts or rim manual is effectively trained on their contents.

• Evaluate each employee's ability to perform these tasks and to service rim wheels safely.

• Provide additional training as necessary to make sure that each employee maintains his or her proficiency.

Helpful tool:

Training checklist

The optional training checklist can help you monitor the training status of your employees. You can find this checklist in the resources section of this chapter.

[Statutory Authority: RCW 49.17.010, 49.17.040, 49.17.050, 49.17.060. 04-20-079, § 296-864-60010, filed 10/5/04, effective 2/1/05.]

WAC 296-864-700 Definitions.

Barrier means a fence, wall or other object placed between a single-piece rim wheel and an employee during tire inflation that will contain the components if the air in the tire is suddenly released.

Charts means:

• The United States Department of Labor, Occupational Safety and Health Administration publications entitled "*Demounting and Mounting Procedures for Truck/Bus Tires*" and "*Multi-Piece Rim Matching Chart*";

• The National Highway Traffic Safety Administration (NHTSA) publications entitled "*Demounting and Mounting Procedures for Truck/Bus Tires*" and "*Multi-Piece Rim Matching Chart*";

OR

• Any other poster that contains at least the same instructions, safety precautions and other information contained in the charts applicable to the types of wheels being serviced.

Demounting means deflating and taking apart a tire and rim wheel.

Installing a rim wheel means the transfer and attachment of an assembled rim wheel onto a vehicle axle hub.

Mounting a tire means the putting together of the wheel and tire components to form a rim wheel, including inflation.

Restraining device is a cage or rack that will hold all rim wheel components during an explosive separation of a multipiece rim wheel or during the sudden release of air in a single-piece rim wheel.

Rim manual is a publication containing instructions from the manufacturer or other qualified organization for correct mounting, demounting, maintenance, and safety precautions for the type of wheel being serviced.

Service or **servicing** means the mounting and demounting of rim wheels, and related activities such as inflating, deflating, installing, removing, and handling.

Service area means any place where an employee services rim wheels.

Single-piece rim wheel means a single part holds the tire, forms part of the air chamber and is the point where the wheel is attached to the vehicle axle.

Split rim wheel or **multipiece rim wheel** means a wheel made up of two or more parts. One of the parts is a side ring or locking ring that holds the tire on the wheel when the tire is inflated.

Trajectory means the path that a rim wheel component may travel during an explosive separation or the sudden release of air.

Wheel means that portion of a rim wheel that attaches to the axle of a vehicle and also contains the inflated tire or tire and tube.

[Statutory Authority: RCW 49.17.010, 49.17.040, 49.17.050, 49.17.060. 04-20-079, § 296-864-700, filed 10/5/04, effective 2/1/05.]

Chapter 296-874 WAC
SCAFFOLDS

WAC

296-874-100 Scope.
296-874-200 General requirements for scaffolds.
296-874-20002 Make sure scaffolds are properly designed and constructed.
296-874-20004 Make sure scaffolds are erected, moved, altered, or dismantled by appropriate persons.
296-874-20006 Maintain structural integrity when intermixing scaffold components.
296-874-20008 Make sure platforms are properly planked or decked.
296-874-20010 Make sure platforms meet minimum width requirements.
296-874-20012 Meet these requirements when using shorter platforms to create a longer platform.
296-874-20014 Lay platform planks properly when the platform changes direction.
296-874-20016 Stabilize the ends of platforms.
296-874-20018 Keep platform sag within acceptable limits.
296-874-20020 Provide safe access to scaffolds.
296-874-20022 Make sure portable, hook-on, and attachable ladders meet these requirements.
296-874-20024 Make sure stairway-type ladders meet these requirements.
296-874-20026 Make sure stair towers meet these requirements.
296-874-20028 Make sure stair rails and handrails meet these requirements.
296-874-20030 Make sure ramps and walkways used to access scaffolds meet these requirements.
296-874-20032 Make sure surfaces used to access scaffolds are close enough to use safely.
296-874-20034 Inspect scaffolds and scaffold components.
296-874-20036 Make sure damaged or weakened scaffolds meet minimum strength requirements.
296-874-20038 Make sure scaffolds are properly loaded.
296-874-20040 Protect employees when moving scaffolds.
296-874-20042 Increase employee working level height on scaffolds safely.
296-874-20044 Control loads being hoisted near scaffolds.
296-874-20046 Protect employees from energized power lines.
296-874-20048 Protect employees from weather hazards.
296-874-20050 Protect employees from slipping and tripping hazards.
296-874-20052 Provide fall protection for employees on scaffolds.
296-874-20054 Provide fall protection if a scaffold is too far from the work face.
296-874-20056 Provide specific fall protection for specific types of scaffolds.
296-874-20058 Make sure personal fall arrest systems meet these requirements.
296-874-20060 Make sure vertical lifelines used with personal fall arrest systems meet these requirements.
296-874-20062 Make sure horizontal lifelines used with personal fall arrest systems meet these requirements.
296-874-20064 Make sure guardrail systems meet these requirements.
296-874-20066 Provide falling object protection.

296-874-20068	Provide additional support lines on suspended scaffolds using a canopy for falling object protection.
296-874-20070	Make sure toeboards meet these requirements.
296-874-20072	Train employees who work on a scaffold.
296-874-20074	Train employees who erect, dismantle, operate or maintain scaffolds.
296-874-20076	Retrain employees when necessary.
296-874-300	Suspended scaffolds.
296-874-30002	Make sure suspended scaffolds and scaffold components meet these strength requirements.
296-874-30004	Make sure suspended scaffold outrigger beams meet these requirements.
296-874-30006	Make sure counterweights are safe and used properly.
296-874-30008	Make sure tiebacks meet these requirements.
296-874-30010	Make sure suspended scaffold support devices meet these requirements.
296-874-30012	Make sure scaffold hoists meet these requirements.
296-874-30014	Make sure scaffold hoists retain enough suspension rope.
296-874-30016	Make sure wire rope is in good condition.
296-874-30018	Make sure wire suspension rope connections meet these requirements.
296-874-30020	Make sure wire rope clips are used properly.
296-874-30022	Prevent swaying of two-point and multipoint suspension scaffolds.
296-874-30024	Use emergency escape and rescue devices appropriately.
296-874-30026	Protect suspension ropes from heat or corrosive substances.
296-874-30028	Take precautions while welding.
296-874-30030	Prohibit use of gasoline-powered equipment on suspended scaffolds.
296-874-30032	Meet these requirements when using catenary scaffolds.
296-874-30034	Meet these requirements when using float (ship) scaffolds.
296-874-30036	Meet these requirements when using interior hung scaffolds.
296-874-30038	Meet these requirements when using multilevel suspended scaffolds.
296-874-30040	Meet these requirements when using multipoint adjustable suspension scaffolds.
296-874-30042	Meet these requirements when using needle beam scaffolds.
296-874-30044	Meet these requirements when using single-point adjustable suspension scaffolds.
296-874-30046	Meet these requirements when using two-point adjustable suspension scaffolds (swing stages).
296-874-400	Supported scaffolds.
296-874-40002	Make sure supported scaffolds and scaffold components meet strength requirements.
296-874-40004	Prevent supported scaffolds from tipping.
296-874-40006	Make sure supported scaffolds are properly supported.
296-874-40008	Provide safe access for persons erecting or dismantling supported scaffolds.
296-874-40010	Provide fall protection for persons erecting or dismantling supported scaffolds.
296-874-40012	Meet these requirements when moving mobile scaffolds.
296-874-40014	Meet these requirements when using bricklayers' square scaffolds (squares).
296-874-40016	Meet these requirements when using crawling boards (chicken ladders).
296-874-40018	Meet these requirements when using fabricated frame scaffolds (tubular welded frame scaffolds).
296-874-40020	Meet these requirements when using integral prefabricated scaffold access frames.
296-874-40022	Meet these requirements when using form scaffolds and carpenter's bracket scaffolds.
296-874-40024	Meet these requirements when using horse scaffolds.
296-874-40026	Meet these requirements when using ladder jack scaffolds.
296-874-40028	Meet these requirements when using outrigger scaffolds.
296-874-40030	Meet these requirements when using pole scaffolds.
296-874-40032	Meet these requirements when using pump jack scaffolds.
296-874-40034	Meet these requirements when using repair bracket scaffolds.
296-874-40036	Meet these requirements when using roof bracket scaffolds.
296-874-40038	Meet these requirements when using step, platform and trestle ladder scaffolds.
296-874-40040	Meet these requirements when using tube and coupler scaffolds.
296-874-40042	Meet these requirements when using window jack scaffolds.
296-874-500	Definitions.

WAC 296-874-100 Scope. This chapter applies to suspended and supported scaffolds, including their supporting structure and anchorage points.

Exemption: This chapter does not apply to:
- Manually propelled elevating work platforms;
- Self-propelled elevating work platforms;
- Boom-supported elevating work platforms;
- Aerial lifts;
- Crane or derrick suspended personnel platforms;
- Personnel platforms supported by powered industrial trucks (PITs).

Reference: Additional requirements for the following types of platforms are found in the general safety and health standards, chapter 296-24 WAC. Go to the following sections:
- For elevating work platforms and aerial lifts, go to elevating work platforms, WAC 296-24-875;
- For crane or derrick suspended personnel platforms, go to WAC 296-24-23533;
- For personnel platforms supported by powered industrial trucks (PITs), go to WAC 296-24-230.

Definition:

A **scaffold** is a temporary elevated platform, including its supporting structure and anchorage points, used for supporting employees or materials.

A **suspended scaffold** is one or more platforms suspended from an overhead structure by ropes or other nonrigid means.

A **supported scaffold** is one or more platforms supported by rigid means such as outrigger beams, brackets, poles, legs, uprights, posts, or frames.

[Statutory Authority: RCW 49.17.010, 49.17.040, 49.17.050, 49.17.060. 05-01-054, § 296-874-100, filed 12/7/04, effective 3/1/05.]

WAC 296-874-200 General requirements for scaffolds.

Section contents:

Your responsibility:

To make sure all scaffolds meet these requirements.

Make sure scaffolds are properly designed and constructed

WAC 296-874-20002.

Make sure scaffolds are erected, moved, altered, or dismantled by appropriate persons

WAC 296-874-20004.

Maintain structural integrity when intermixing scaffold components

WAC 296-874-20006.

Make sure platforms are properly planked or decked

WAC 296-874-20008.

Make sure platforms meet minimum width requirements

WAC 296-874-20010.

Meet these requirements when shorter platforms are used to create a longer platform

WAC 296-874-20012.

Lay platform planks properly when the platform changes direction

WAC 296-874-20014.

Stabilize the ends of platforms

WAC 296-874-20016.

Keep platform sag within acceptable limits

WAC 296-874-20018.

Provide safe access to scaffolds

WAC 296-874-20020.

Make sure portable, hook-on, and attachable ladders meet these requirements

WAC 296-874-20022.

Make sure stairway-type ladders meet these requirements

WAC 296-874-20024.

Make sure stair towers meet these requirements

WAC 296-874-20026.

Make sure stair rails and handrails meet these requirements

WAC 296-874-20028.

Make sure ramps and walkways used to access scaffolds meet these requirements

WAC 296-874-20030.

Make sure surfaces used to access scaffolds are close enough to use safely

WAC 296-874-20032.

Inspect scaffolds and scaffold components

WAC 296-874-20034.

Make sure damaged or weakened scaffolds meet minimum strength requirements

WAC 296-874-20036.

Make sure scaffolds are properly loaded

WAC 296-874-20038.

Protect employees when moving scaffolds

WAC 296-874-20040.

Increase employee working level height on scaffolds safely

WAC 296-874-20042.

Control loads being hoisted near scaffolds

WAC 296-874-20044.

Protect employees from energized power lines

WAC 296-874-20046.

Protect employees from weather hazards

WAC 296-874-20048.

Protect employees from slipping and tripping hazards

WAC 296-874-20050.

Provide fall protection for employees on scaffolds

WAC 296-874-20052.

Provide fall protection if the scaffold is too far from the work face

WAC 296-874-20054.

Provide specific fall protection for specific types of scaffolds

WAC 296-874-20056.

Make sure personal fall arrest systems meet these requirements

WAC 296-874-20058.

Make sure vertical lifelines used with personal fall arrest systems meet these requirements

WAC 296-874-20060.

Make sure horizontal lifelines used with personal fall arrest systems meet these requirements

WAC 296-874-20062.

Make sure guardrail systems meet these requirements

WAC 296-874-20064.

Provide falling object protection

WAC 296-874-20066.

Provide additional support lines on suspended scaffolds using a canopy for falling object protection

WAC 296-874-20068.

Make sure toeboards meet these requirements

WAC 296-874-20070.

Train employees who work on scaffolds

WAC 296-874-20072.

Train employees who erect, dismantle, operate or maintain scaffolds

WAC 296-874-20074.

Retrain employees when necessary

WAC 296-874-20076.

[Statutory Authority: RCW 49.17.010, 49.17.040, 49.17.050, 49.17.060. 05-01-054, § 296-874-200, filed 12/7/04, effective 3/1/05.]

WAC 296-874-20002 Make sure scaffolds are properly designed and constructed.

You must:

• Make sure scaffolds are:

– Designed by a qualified person;

AND

– Constructed according to that design.

• Prohibit the use of shore and lean-to scaffolds.

Definition:

A **qualified person** is one who has demonstrated the ability to solve problems related to the subject matter, work, or project. This can be done by having either:

• A recognized degree, certificate, or professional standing;

OR

• Extensive knowledge, training, and experience.

[Statutory Authority: RCW 49.17.010, 49.17.040, 49.17.050, 49.17.060. 05-01-054, § 296-874-20002, filed 12/7/04, effective 3/1/05.]

WAC 296-874-20004 Make sure scaffolds are erected, moved, altered, or dismantled by appropriate persons.

You must:

• Make sure scaffolds are erected, moved, altered, or dismantled only when the work is:

– Supervised and directed by a competent person qualified in scaffold erection, moving, dismantling, or alteration;

AND

– Done by experienced and trained employees selected by the competent person.

Definition:

A **competent person** is someone who:

• Is capable of identifying existing and predictable hazards in the surroundings or working conditions which are unsanitary, hazardous, or dangerous to employees;

AND

• Has the authority to take prompt corrective measures to eliminate them.

[Statutory Authority: RCW 49.17.010, 49.17.040, 49.17.050, 49.17.060. 05-01-054, § 296-874-20004, filed 12/7/04, effective 3/1/05.]

WAC 296-874-20006 Maintain structural integrity when intermixing scaffold components.

You must:

• Make sure intermixed scaffold components:

– Fit together without force;

AND

– Maintain the scaffold's structural integrity.

• Make sure a qualified person determines that modifying components in order to intermix them will result in a structurally sound scaffold.

• Make sure scaffold components made of different metals are not used together.

Exemption: Different types of metals may be used together if a competent person determines that galvanic action will not reduce the strength of any component to less than the minimum strength required.

Reference: The minimum strength requirements are found in the following sections:
- Suspended scaffolds, WAC 296-874-30002;
- Supported scaffolds, WAC 296-874-40002.

[Statutory Authority: RCW 49.17.010, 49.17.040, 49.17.050, 49.17.060. 05-01-054, § 296-874-20006, filed 12/7/04, effective 3/1/05.]

WAC 296-874-20008 Make sure platforms are properly planked or decked.

You must:

• Fully plank or deck each platform between the front uprights and the guardrail supports on all working levels of a scaffold so that there is no more than one inch (2.5 cm):

– Between adjacent units;

AND

– Between the platform and the uprights.

Exemption: •There may be more than one inch between platform units if all of the following are met:
– You can demonstrate that a wider space is necessary, such as to fit around uprights when side brackets are used to extend the platform width;
– The platform is planked or decked as fully as possible;
– The open space between the platform and the guardrail supports is nine and one-half inches (24.1 cm) or less.
• Platforms used solely as walkways or only by employees erecting or dismantling scaffolds do not have to be fully decked or planked if:
– The planking provided makes for safe working conditions;
AND
– Employees on those platforms are protected from falling.

REFERENCE		
Fall protection requirements for employees:	Are located in the following chapters:	In the following sections:
On walkways within scaffolds	Chapter 296-874 WAC, Scaffolds	WAC 296-874-20056
Erecting or dismantling supported scaffolds	Chapter 296-874 WAC, Scaffolds	WAC 296-874-40010
Erecting or dismantling suspended scaffolds in general industry	Chapter 296-24 WAC, General safety and health standards	Part J-1 Working surfaces, guarding floors and wall openings, ladders AND Part J-3 Powered platforms
Erecting or dismantling suspended scaffolds in construction work	Chapter 296-155 WAC, Safety standards for construction work	Part C-1 Fall restraint and fall arrest AND Part K Floor openings, wall openings, and stairways

You must:

• Make sure wood platforms are not covered with an opaque finish.

Exemption: Platform edges may be covered or marked for identification.

Note: Platforms may be coated periodically with wood preservatives, fire-retardant finishes, or slip-resistant finishes if the coating does not obscure the top or bottom wood surfaces.

[Statutory Authority: RCW 49.17.010, 49.17.040, 49.17.050, 49.17.060. 05-01-054, § 296-874-20008, filed 12/7/04, effective 3/1/05.]

WAC 296-874-20010 Make sure platforms meet minimum width requirements.

You must:

• Make sure scaffold platforms meet the minimum width requirements of Table 1, Minimum Platform Width.

Table 1
Minimum Platform Width

Type of Scaffold	Minimum Platform Width Required
Ladder jack scaffold Pump jack scaffold Roof bracket scaffold Top plate bracket scaffold	12 inches (20 cm)
Boatswain's chair	No minimum width
All other scaffolds	18 inches (46 cm) **Exemption:** Platforms and walkways may be less than 18 inches (46 cm) wide if **all** of the following are met: • You can demonstrate that the area is so narrow that the platform or walkway cannot be at least 18 inches (46 cm) wide • The platform or walkway is as wide as feasible • Employees on those platforms or walkways are protected from falling by using guardrails or personal fall arrest systems.

[Statutory Authority: RCW 49.17.010, 49.17.040, 49.17.050, 49.17.060. 05-01-054, § 296-874-20010, filed 12/7/04, effective 3/1/05.]

WAC 296-874-20012 Meet these requirements when using shorter platforms to create a longer platform.

You must:

• Make sure, when platforms are overlapped to create a longer platform, that:

– The overlap is over a support;

AND

– The platforms are either:

■ Overlapped by at least twelve inches (30 cm);

OR

■ Are nailed together or otherwise prevented from moving.

• Make sure, when platforms are butted together to create a longer platform, that each abutted platform end rests on a separate support surface.

Note: Platforms may butt together on a common support member if the member is designed to support abutting platforms, such as either:

• A "T" section;

OR

• Hook-on platforms designed to rest on common supports.

[Statutory Authority: RCW 49.17.010, 49.17.040, 49.17.050, 49.17.060. 05-01-054, § 296-874-20012, filed 12/7/04, effective 3/1/05.]

WAC 296-874-20014 Lay platform planks properly when the platform changes direction.

You must:

• Do the following whenever platforms overlap to change direction:

– First lay the platform that rests on a bearer at an angle other than a right angle;

THEN

– Lay the platform that is perpendicular to the bearer.

[Statutory Authority: RCW 49.17.010, 49.17.040, 49.17.050, 49.17.060. 05-01-054, § 296-874-20014, filed 12/7/04, effective 3/1/05.]

WAC 296-874-20016 Stabilize the ends of platforms.

You must:

• Make sure each end of a platform:

– Is cleated or restrained by hooks or equivalent means;

OR

– Extends over the centerline of its support at least six inches (15 cm).

• Make sure the cantilevered portion of a platform meets at least one of the following:

– Is designed and installed to support employees or material without tipping;

– Has guardrails which block employee access to the cantilevered end;

– Extends over its support not more than:

■ Twelve inches (30 cm) if the platform length is ten feet or less;

OR

■ Eighteen inches (46 cm) if the platform length is greater than ten feet.

Note: The cantilevered portion of a platform is the portion that is not supported on one end.

[Statutory Authority: RCW 49.17.010, 49.17.040, 49.17.050, 49.17.060. 05-01-054, § 296-874-20016, filed 12/7/04, effective 3/1/05.]

WAC 296-874-20018 Keep platform sag within acceptable limits.

You must:

• Make sure a loaded platform does not sag more than one-sixtieth of the span.

[Statutory Authority: RCW 49.17.010, 49.17.040, 49.17.050, 49.17.060. 05-01-054, § 296-874-20018, filed 12/7/04, effective 3/1/05.]

WAC 296-874-20020 Provide safe access to scaffolds.

You must:

• Provide scaffold platforms more than two feet (0.6 m) above or below a point of access with at least one of the following means of access:

– Portable, hook-on, or attachable ladder;

– Stairway-type ladder;

– Ladder stand;

– Stair tower (scaffold stairway or tower);

– Ramp;

– Walkway;

– Integral prefabricated scaffold access;

– Direct access from another scaffold, structure, personnel hoist, or similar surface.

• Make sure crossbraces are not used as a means of access.

Reference: For requirements about integral prefabricated scaffold access, go to WAC 296-874-40020.

[Statutory Authority: RCW 49.17.010, 49.17.040, 49.17.050, 49.17.060. 05-01-054, § 296-874-20020, filed 12/7/04, effective 3/1/05.]

WAC 296-874-20022 Make sure portable, hook-on, and attachable ladders meet these requirements.

You must:

• Position portable, hook-on, and attachable ladders so they do not tip the scaffold.

• Make sure hook-on and attachable ladders meet all of the following:

– Specifically designed and used for that type of scaffold;

– Have rungs that are:

■ Uniformly spaced;

■ Not more than sixteen and three-quarters inches apart;

■ At least eleven and one-half inches (29 cm) long;

■ Lined up vertically between rest platforms.

• Position the bottom rung not more than twenty-four inches (61 cm) above the scaffold supporting level.

• Have rest platforms at vertical intervals not greater than twenty-four feet (7.3 m) on supported scaffolds.

[Statutory Authority: RCW 49.17.010, 49.17.040, 49.17.050, 49.17.060. 05-01-054, § 296-874-20022, filed 12/7/04, effective 3/1/05.]

WAC 296-874-20024 Make sure stairway-type ladders meet these requirements.

You must:

• Make sure stairway-type ladders meet all of the following:

– Position the bottom step not more than twenty-four inches (61 cm) above the scaffold supporting level;

– Have rest platforms not more than twelve feet (3.7 m) apart vertically;

– Have slip-resistant surfaces on treads and landings;

– Have steps that:

■ Are at least sixteen inches (41 cm) wide;

AND

■ Line up vertically between rest platforms.

• Make sure mobile ladder stands have steps that are at least eleven and one-half inches (30 cm) wide.

Definition:

A **ladder stand** is a mobile, fixed-size, self-supporting ladder consisting of a wide flat tread ladder in the form of stairs.

[Statutory Authority: RCW 49.17.010, 49.17.040, 49.17.050, 49.17.060. 05-01-054, § 296-874-20024, filed 12/7/04, effective 3/1/05.]

WAC 296-874-20026 Make sure stair towers meet these requirements.

You must:

• Make sure stair towers (scaffold stairways or towers) meet all of the following:

– Are positioned so the bottom step is not more than twenty-four inches (61 cm) above the scaffold supporting level;

– Are at least eighteen inches (45.7 cm) wide between stair rails;

– Have slip-resistant surfaces on treads and landings;

– Are installed at an angle of forty to sixty degrees from the horizontal.

• Provide a landing platform at least eighteen inches (45.7 cm) wide by eighteen inches (45.7 cm) long at each level.

• Provide guardrails on the open sides and ends of each landing.

Reference: For requirements about guardrails, go to WAC 296-874-20064.

You must:

• Make sure steps meet all of the following requirements:

– Line up vertically between rest platforms;

– Have uniform tread depth, within one-quarter inch (0.6 cm), for each flight of stairs;

– Have uniform riser height, within one-quarter inch (0.6 cm), for each flight of stairs.

Note: Riser height may have larger variations at the top step and bottom step of the entire stair system, but not at the top and bottom steps within each flight of stairs.

[Statutory Authority: RCW 49.17.010, 49.17.040, 49.17.050, 49.17.060. 05-01-054, § 296-874-20026, filed 12/7/04, effective 3/1/05.]

WAC 296-874-20028 Make sure stair rails and handrails meet these requirements.

You must:

• Provide a stair rail that meets all of the following on each side of a scaffold stairway:

– Has a toprail and midrail;

– Has a toprail that can serve as a handrail if a separate handrail is not provided;

– Is at least twenty-eight inches (71 cm) but not more than thirty-seven inches (94 cm) high.

Note: Stair rail height is measured from the upper surface of the stair rail to the surface of the tread, in line with the face of the riser at the forward edge of the tread.

You must:

• Make sure stair rail systems and handrails have:

– A surface that prevents employees from:

■ Being injured by punctures or lacerations;

OR

■ Snagging their clothing.

– Ends that do not create a projection hazard.

• Make sure handrails, and top rails that are used as handrails:

– Provide an adequate handhold for employees to grasp to avoid falling;

AND

– Are at least three inches (7.6 cm) from other objects.

[Statutory Authority: RCW 49.17.010, 49.17.040, 49.17.050, 49.17.060. 05-01-054, § 296-874-20028, filed 12/7/04, effective 3/1/05.]

WAC 296-874-20030 Make sure ramps and walkways used to access scaffolds meet these requirements.

You must:

• Make sure ramps and walkways are not inclined at a slope steeper than one vertical in three horizontal (1:3 or twenty degrees from the horizontal).

• Make sure ramps and walkways that are inclined at a slope steeper than one vertical in eight horizontal (1:8) have cleats to provide footing which are:

– Securely fastened to the planks;

AND

– Spaced not more than fourteen inches (35 cm) apart.

Reference: Ramps and walkways that are four feet (1.2 m) or more above a lower level need to have a guardrail system. Those requirements are found in other chapters.

– For general industry activities, go to:

■ Working surfaces, guarding floors and wall openings, ladders, Part J-1, in the general safety and health standards, chapter 296-24 WAC;

– For construction activities, go to:

■ Floor openings, wall openings, and stairways, Part K, in the safety standards for construction work, chapter 296-155 WAC.

[Statutory Authority: RCW 49.17.010, 49.17.040, 49.17.050, 49.17.060. 05-01-054, § 296-874-20030, filed 12/7/04, effective 3/1/05.]

WAC 296-874-20032 Make sure surfaces used to access scaffolds are close enough to use safely.

You must:

• Make sure a surface used to provide access to or from a scaffold is not further from the scaffold than:

– Fourteen inches (36 cm) horizontally;

– Twenty-four inches (61 cm) vertically.

[Statutory Authority: RCW 49.17.010, 49.17.040, 49.17.050, 49.17.060. 05-01-054, § 296-874-20032, filed 12/7/04, effective 3/1/05.]

WAC 296-874-20034 Inspect scaffolds and scaffold components.

You must:

• Make sure scaffolds and scaffold components are inspected for visible defects by a competent person:

– Before each work shift;

AND

– After anything occurs that could affect the scaffold's structural integrity.

[Statutory Authority: RCW 49.17.010, 49.17.040, 49.17.050, 49.17.060. 05-01-054, § 296-874-20034, filed 12/7/04, effective 3/1/05.]

WAC 296-874-20036 Make sure damaged or weakened scaffolds meet minimum strength requirements.

You must:

• Make sure any scaffold or scaffold component that has been damaged or weakened so that it no longer meets the minimum strength requirements of this chapter, is immediately either:

– Repaired, replaced, or braced to meet the minimum strength requirements;

OR

– Removed from service until repaired.

Reference: For information on minimum strength requirements for suspended and supported scaffolds, go to the following sections within this chapter:

– Make sure suspended scaffolds and scaffold components meet these strength requirements, WAC 296-874-30002;

– Make sure supported scaffolds and scaffold components meet these strength requirements, WAC 296-874-40002.

[Statutory Authority: RCW 49.17.010, 49.17.040, 49.17.050, 49.17.060. 05-01-054, § 296-874-20036, filed 12/7/04, effective 3/1/05.]

WAC 296-874-20038 Make sure scaffolds are properly loaded. You must:

• Load scaffolds as specified in the:

– Manufacturer's instructions;

OR

– Design of the qualified person.

• Make sure scaffolds and scaffold components do not exceed their maximum intended load or rated load, whichever is less.

[Statutory Authority: RCW 49.17.010, 49.17.040, 49.17.050, 49.17.060. 05-01-054, § 296-874-20038, filed 12/7/04, effective 3/1/05.]

WAC 296-874-20040 Protect employees when moving scaffolds.

You must:

• Make sure scaffolds are not moved horizontally while employees are on them.

Exemption: A scaffold may be moved horizontally with employees on it if the scaffold:

- Has been specifically designed for such movement by a registered professional engineer;

OR

- Is a mobile scaffold that meets the requirements of the section, Meet these requirements when moving mobile scaffolds, WAC 296-874-40012.

[Statutory Authority: RCW 49.17.010, 49.17.040, 49.17.050, 49.17.060. 05-01-054, § 296-874-20040, filed 12/7/04, effective 3/1/05.]

WAC 296-874-20042 Increase employee working level height on scaffolds safely.

You must:

• Make sure makeshift devices, such as boxes and barrels, are not used on scaffold platforms to increase the working level height for employees.

• Meet all of the following when using stilts on scaffolds:

– Use stilts only on large area scaffolds;

– Increase the height of a guardrail system used for fall protection by an amount equal to the height of the stilts being used;

– Make sure scaffold platforms where stilts are used are flat and free of:

■ Pits, holes, and obstructions such as debris;

AND

■ Other tripping or falling hazards.

– Make sure stilts are:

■ Properly maintained;

AND

■ The original equipment is not altered without the manufacturer's approval.

• Meet all of the following when using ladders on scaffolds:

– Use ladders only on large area scaffolds;

– Secure the platform units to the scaffold to prevent movement;

– Secure the scaffold against the sideways thrust exerted by the ladder if the ladder is placed against a structure that's not part of the scaffold;

– Make sure the ladder legs are:

■ Secured to prevent them from slipping or being pushed off the platform;

AND

■ On the same scaffold platform, or use other means, to stabilize the ladder against uneven platform deflection.

[Statutory Authority: RCW 49.17.010, 49.17.040, 49.17.050, 49.17.060. 05-01-054, § 296-874-20042, filed 12/7/04, effective 3/1/05.]

WAC 296-874-20044 Control loads being hoisted near scaffolds.

You must:

• Use a tag line or equivalent measures to control loads being hoisted onto or near a scaffold if the load could swing and contact the scaffold.

[Statutory Authority: RCW 49.17.010, 49.17.040, 49.17.050, 49.17.060. 05-01-054, § 296-874-20044, filed 12/7/04, effective 3/1/05.]

WAC 296-874-20046 Protect employees from energized power lines.

You must:

• Make sure scaffolds are erected, moved, altered, or dismantled so that they, and any conductive material handled on them, are kept at least as far from exposed and energized power lines as shown in Table 2, Minimum Separation Distance from Energized Power Lines.

Table 2
Minimum Separation Distance from Energized Power Lines

Voltage	Minimum Separation Distance
Less than 300 volts (insulated lines)	3 feet (0.9 m)
Less than 300 volts (uninsulated lines)	10 feet (3.1 m)
300 volts to 50 kv	10 feet (3.1 m)
More than 50 kv	10 feet (3.1 m) + 0.4 inches (1.0 cm) for each 1 kv over 50 kv **Note:** You may use an alternative minimum separation distance of 2 times the length of the line insulator, but never less than 10 feet (3.1 m).

Exemption: Scaffolds and conductive materials handled on scaffolds may be closer to power lines than the minimum separation distance specified in Table 2 if **all** of the following are met:

- Less clearance is necessary to do the work;
- The utility company or electrical system operator has been notified of the need to work closer to the power lines;
- The utility company or electrical system operator has done at least one of the following:

– Deenergized the lines;

– Relocated the lines to meet the minimum separation distance requirement;

– Installed protective coverings over the lines to prevent accidental contact.

[Statutory Authority: RCW 49.17.010, 49.17.040, 49.17.050, 49.17.060. 05-01-054, § 296-874-20046, filed 12/7/04, effective 3/1/05.]

WAC 296-874-20048 Protect employees from weather hazards.

You must:

• Prohibit work on or from scaffolds during storms or high winds unless both of the following are met:

– A competent person has determined that it is safe for employees to be on the scaffold;

– The employees are protected by either:

■ A personal fall arrest system;

OR

■ Wind screens.

• Make sure wind screens are not used unless the scaffold is secured against the anticipated wind forces.

[Statutory Authority: RCW 49.17.010, 49.17.040, 49.17.050, 49.17.060. 05-01-054, § 296-874-20048, filed 12/7/04, effective 3/1/05.]

WAC 296-874-20050 Protect employees from slipping and tripping hazards.

You must:

• Make sure debris does not accumulate on platforms.

• Prohibit employees from working on scaffolds covered with snow, ice, or other slippery material.

Exemption: Employees may be on scaffolds as necessary to remove the slipping hazard.

[Statutory Authority: RCW 49.17.010, 49.17.040, 49.17.050, 49.17.060. 05-01-054, § 296-874-20050, filed 12/7/04, effective 3/1/05.]

WAC 296-874-20052 Provide fall protection for employees on scaffolds.

You must:

• Protect each employee on a scaffold more than ten feet (3.1 m) above a lower level, from falling to the lower level, by providing either:

– A personal fall arrest system;

OR

– Guardrails.

REFERENCE		
Fall protection requirements for employees:	Are located in the following chapters:	In the following sections:
On walkways within scaffolds	Chapter 296-874 WAC, Scaffolds	WAC 296-874-20056
Erecting or dismantling supported scaffolds	Chapter 296-874 WAC, Scaffolds	WAC 296-874-40010
Erecting or dismantling suspended scaffolds in general industry	Chapter 296-24 WAC, General safety and health standards	Part J-1 Working surfaces, guarding floors and wall openings, ladders AND Part J-3 Powered platforms
Erecting or dismantling suspended scaffolds in construction work	Chapter 296-155 WAC, Safety standards for construction work	Part C-1 Fall restraint and fall arrest AND Part K Floor openings, wall openings, and stairways

You must:

• Make sure employees erecting the scaffold install the guardrail system, if required, before the scaffold is used by any other employees.

[Statutory Authority: RCW 49.17.010, 49.17.040, 49.17.050, 49.17.060. 05-01-054, § 296-874-20052, filed 12/7/04, effective 3/1/05.]

WAC 296-874-20054 Provide fall protection if a scaffold is too far from the work face.

You must:

• Provide a guardrail system along the front edge of the platform, or have employees use a personal fall arrest system, if the distance from the front edge of the platform to the work face is greater than:

– Eighteen inches (46 cm) for scaffolds used for plastering and lathing operations;

– Fourteen inches (36 cm) for all other scaffolds.

[Statutory Authority: RCW 49.17.010, 49.17.040, 49.17.050, 49.17.060. 05-01-054, § 296-874-20054, filed 12/7/04, effective 3/1/05.]

WAC 296-874-20056 Provide specific fall protection for specific types of scaffolds.

You must:

• Use a personal fall arrest system to protect employees on the following scaffolds:

– Boatswain's chair;

– Catenary scaffold;

– Float scaffold;

– Ladder jack scaffold;

– Needle beam scaffold.

• Use a personal fall arrest system **and** a guardrail system to protect employees on:

– Single-point adjustable suspension scaffolds;

AND

– Two-point adjustable suspension scaffolds.

• Protect employees working on a crawling board (chicken ladder) by using at least one of the following:

– A personal fall arrest system;

– A guardrail system with a minimum two hundred pound toprail capacity;

– A three-quarter inch (1.9 cm) diameter grabline or equivalent handhold securely fastened beside each crawling board.

• Protect employees working on a self-contained adjustable scaffold that has the platform:

– Supported by the frame structure, using a guardrail system with a minimum two hundred pound toprail capacity.

– Suspended by ropes, using:

■ A guardrail system with a minimum two hundred pound toprail capacity;

AND

■ A personal fall arrest system.

• Protect employees on walkways located within a scaffold by using a guardrail system that meets all of the following:

– Has a minimum two hundred pound toprail capacity;

– Is installed within nine and one-half inches (24.1 cm) of the walkway;

– Is installed along at least one side of the walkway.

[Statutory Authority: RCW 49.17.010, 49.17.040, 49.17.050, 49.17.060. 05-01-054, § 296-874-20056, filed 12/7/04, effective 3/1/05.]

WAC 296-874-20058 Make sure personal fall arrest systems meet these requirements.

You must:

• Make sure personal fall arrest systems used on scaffolds for general industry activities, meet the requirements of personal fall arrest system, Appendix C, Part 1, WAC 296-24-88050, in powered platforms, Part J-3, found in the general safety and health standards, chapter 296-24 WAC.

• Make sure personal fall arrest systems are attached by a lanyard to one of the following:

– Vertical lifeline;

– Horizontal lifeline;

– Appropriate structural member of the scaffold.

Reference: Requirements for personal fall arrest systems used on scaffolds for construction activities are in fall restraint and fall arrest, Part C-1, found in the safety standards for construction work, chapter 296-155 WAC.

[Statutory Authority: RCW 49.17.010, 49.17.040, 49.17.050, 49.17.060. 05-01-054, § 296-874-20058, filed 12/7/04, effective 3/1/05.]

WAC 296-874-20060 Make sure vertical lifelines used with personal fall arrest systems meet these requirements.

You must:

• Make sure vertical lifelines are all of the following:

– Fastened to a fixed, safe point of anchorage;

– Independent of the scaffold;

– Protected from sharp edges and abrasion.

Note: Safe points of anchorage include structural members of buildings, but do **not** include:
• Standpipes, vents, or other piping systems;
• Electrical conduit;
• Outrigger beams;
• Counterweights.

You must:

• Make sure vertical lifelines, independent support lines, and suspension ropes are **not** attached to any of the following:

– Each other;

– The same point of anchorage;

– The same point on the scaffold.

• Make sure vertical lifelines, independent support lines, and suspension ropes do not use the same point of anchorage.

• Make sure independent support lines and suspension ropes are not attached to a personal fall arrest system.

• Make sure vertical lifelines are not used with single-point or two-point adjustable suspension scaffolds that have overhead components such as overhead protection or additional platform levels.

[Statutory Authority: RCW 49.17.010, 49.17.040, 49.17.050, 49.17.060. 05-01-054, § 296-874-20060, filed 12/7/04, effective 3/1/05.]

WAC 296-874-20062 Make sure horizontal lifelines used with personal fall arrest systems meet these requirements.

You must:

• Equip single-point or two-point adjustable suspension scaffolds that use horizontal lifelines or structural members of the scaffold for fall protection with both of the following:

– Additional independent support lines that are equal in number and equivalent in strength to the suspension ropes;

– Automatic locking devices capable of stopping the scaffold from falling if one or both of the suspension ropes fail.

• Make sure horizontal lifelines are secured to either:

– Two or more structural members of the scaffold;

OR

– Looped around both the suspension ropes and independent support lines above the hoist and brake attached to the end of the scaffold.

• Make sure independent support lines and suspension ropes are **not:**

– Attached to each other or the same point on the scaffold;

– Attached to or use the same point of anchorage.

• Make sure independent support lines and suspension ropes are not attached to either:

– A personal fall arrest system;

OR

– The same point on the scaffold as a personal fall arrest system.

• Make sure, if a horizontal lifeline is used where it may become a vertical lifeline, that the device used to connect a lanyard to the horizontal lifeline is capable of locking in both directions on the lifeline.

[Statutory Authority: RCW 49.17.010, 49.17.040, 49.17.050, 49.17.060. 05-01-054, § 296-874-20062, filed 12/7/04, effective 3/1/05.]

WAC 296-874-20064 Make sure guardrail systems meet these requirements.

You must:

• Make sure guardrails, if required, are installed along all open sides and ends of platforms.

Exemption: For employees doing overhand bricklaying operations from a supported scaffold, a guardrail is not required on the side next to the wall.

Definition:

Overhand bricklaying is the process of laying bricks and masonry units so that the surface of the wall is on the opposite side of the wall from the mason, requiring the mason to lean over the wall to complete the work. It includes mason tending and electrical installation incorporated into the brick wall.

You must:

• Make sure the height of the toprail top edge, or the equivalent member, of supported scaffolds is:

– At least thirty-six inches (0.9 m) and not more than forty-five inches (1.2 m) above the platform surface for scaffolds manufactured or first placed in service **before January 1, 2000;**

– At least thirty-eight inches (0.97 m) and not more than forty-five inches (1.2 m) above the platform surface for scaffolds manufactured or first placed in service **after January 1, 2000.**

• Make sure the height of the toprail top edge, or the equivalent member, of suspended scaffolds that require guardrails and personal fall arrest systems, is at least thirty-six inches (0.9 m) and not more than forty-five inches (1.2 m) above the platform surface.

Exemption: When conditions warrant, the height of the top edge of the toprail may be greater than forty-five inches if the guardrail system meets all other criteria of this chapter.

You must:

• Make sure the top edge of the toprail doesn't drop below the required height when the minimum load, shown in Table 3, Minimum Toprail and Midrail Strength Requirements, is used.

• Each toprail and midrail, or equivalent member, of a guardrail system must be able to withstand, without failure, the force shown in Table 3, Minimum Toprail and Midrail Strength Requirements, when the force is applied as follows:

– To the toprail in a downward or horizontal direction at any point along its top edge;

– To the midrail in a downward or horizontal direction at any point.

Note: Midrail includes screens, mesh, intermediate vertical members, solid panels, and equivalent structural members of the guardrail system.

Table 3
Minimum Toprail and Midrail Strength Requirements

Type of Scaffold	Toprail Capacity	Midrail Capacity
• Single-point adjustable suspension scaffolds • Two-point adjustable suspension scaffolds	100 pounds (445 n)	75 pounds (333 n)
• All other scaffolds • Walkways within a scaffold	200 pounds (890 n)	150 pounds (666 n)

You must:

• Install midrails, screens, mesh, intermediate vertical members, solid panels, or equivalent structural members as follows:

– Midrails at a height approximately midway between the top edge of the guardrail system and the platform surface;

– Screens and mesh:

■ From the top edge of the guardrail system to the scaffold platform;

AND

■ Along the entire opening between the supports;

– Intermediate members, such as balusters or additional rails, not more than nineteen inches (48 cm) apart.

• Make sure steel or plastic banding is not used as a toprail or midrail.

• Have a competent person inspect manila rope and plastic or other synthetic rope that is used as a toprail or midrail as frequently as necessary to make sure it continues to meet the strength requirements for a toprail or midrail.

Note: Crossbraces may be used as a toprail or midrail in a guardrail system if they meet the following requirements:
• The crossing point of the two braces is between:
– 20" and 30" above the work platform when used as a midrail.
– 38" and 48" above the work platform when used as a toprail.
• The end points at each upright are not more than 48" apart.

You must:

• Make sure guardrails have a surface that prevents:

– Puncture and laceration injuries;

AND

– Snagging clothing.

• Make sure any rail extending beyond the post of a guardrail does not create a projection hazard.

[Statutory Authority: RCW 49.17.010, 49.17.040, 49.17.050, 49.17.060. 05-01-054, § 296-874-20064, filed 12/7/04, effective 3/1/05.]

WAC 296-874-20066 Provide falling object protection.

Reference: Hardhats and possibly other personal protective equipment has to be used to protect employees exposed to overhead hazards.
• Those requirements are found in the safety and health core rules, chapter 296-800 WAC.
– Go to Personal protective equipment (PPE), WAC 296-800-160.

You must:

• Protect employees from being struck by tools, materials, or equipment falling from a scaffold by doing one or more of the following:

– Use a barricade to keep employees out of the area where falling objects could be a hazard;

– Install a toeboard along the edge of the platform anywhere an object could fall on an employee below;

– Install paneling or screening that covers from the top of the guardrail to the toeboard or platform anywhere the toeboard is **not** high enough to keep objects from falling off the platform;

– Install a guardrail system with openings small enough to keep potential falling objects from passing through;

– Erect a canopy structure, debris net, or catch platform over employees that does all of the following:

■ Will contain or deflect falling objects;

■ Is strong enough to withstand the impact forces;

■ Is installed between the falling object hazard and the employees.

• Make sure potential falling objects that are too large or heavy to be contained or deflected by the falling object protection you are using are:

– Moved away from the edge of the surface they could fall from;

AND

– Secured, as necessary, to prevent falling.

[Statutory Authority: RCW 49.17.010, 49.17.040, 49.17.050, 49.17.060. 05-01-054, § 296-874-20066, filed 12/7/04, effective 3/1/05.]

WAC 296-874-20068 Provide additional support lines on suspended scaffolds using a canopy for falling object protection.

You must:

• Equip suspended scaffolds, that use a canopy for falling object protection, with additional independent support lines that meet all of the following:

– Have the same number of support lines as there are suspension ropes;

– Are equivalent in strength to the suspension ropes;

– Are not attached to the same point of anchorage as the suspension ropes.

[Statutory Authority: RCW 49.17.010, 49.17.040, 49.17.050, 49.17.060. 05-01-054, § 296-874-20068, filed 12/7/04, effective 3/1/05.]

WAC 296-874-20070 Make sure toeboards meet these requirements.

You must:

• Make sure toeboards, when used, are:

– At least three and one-half inches (9 cm) high from the top edge of the toeboard to the platform;

– Securely fastened along the outer edge of the platform;

– Installed for enough distance along the platform to protect employees below;

– Installed so the gap between the bottom of the toeboard and the platform is one-quarter inch (0.7 cm) or less;

– Solid or with openings that are one inch (2.5 cm) or less in the largest dimension;

– Able to withstand, without failing, a force of at least fifty pounds (222 n) applied in a downward or horizontal direction anywhere along the toeboard.

Exemption: On float (ship) scaffolds, an edging of three-quarters by one and one-half inch (2 x 4 cm) wood or the equivalent may be used instead of a toeboard.

[Statutory Authority: RCW 49.17.010, 49.17.040, 49.17.050, 49.17.060. 05-01-054, § 296-874-20070, filed 12/7/04, effective 3/1/05.]

WAC 296-874-20072 Train employees who work on a scaffold. You must:

• Have a qualified person train each employee who works on a scaffold to:

– Recognize the hazards associated with the type of scaffold they are using;

AND

– Understand the procedures to control or minimize the hazards.

• Include the following subjects in your training:

– Hazards in the work area and how to deal with them, including:

■ Electrical hazards;

■ Fall hazards;

■ Falling object hazards;

■ How to erect, maintain, and disassemble the fall protection and falling object protection systems being used;

– How to:

■ Use the scaffold;

■ Handle materials on the scaffold;

– The load-carrying capacity and maximum intended load of the scaffold;

– Any other requirements of this chapter that apply.

[Statutory Authority: RCW 49.17.010, 49.17.040, 49.17.050, 49.17.060. 05-01-054, § 296-874-20072, filed 12/7/04, effective 3/1/05.]

WAC 296-874-20074 Train employees who erect, dismantle, operate or maintain scaffolds.

You must:

• Have a competent person train each employee who erects, disassembles, moves, operates, repairs, maintains, or inspects scaffolds to recognize any hazards associated with the work.

• Make sure the training includes at least the following subjects:

– Hazards in the work area and how to deal with them;

– The correct procedures for erecting, disassembling, moving, operating, repairing, inspecting, and maintaining the type of scaffold being used;

– The design criteria, maximum intended load-carrying capacity and intended use of the scaffold;

– Any other requirements of this chapter that apply.

[Statutory Authority: RCW 49.17.010, 49.17.040, 49.17.050, 49.17.060. 05-01-054, § 296-874-20074, filed 12/7/04, effective 3/1/05.]

WAC 296-874-20076 Retrain employees when necessary.

You must:

• Retrain employees to reestablish proficiency if you believe they lack the skill or understanding to safely erect, use, or dismantle a scaffold.

• Retraining is required in at least the following situations:

– An employee's work involving scaffolds is inadequate and indicates they lack the necessary proficiency;

– A change in **any** of the following that presents a hazard the employee has not been trained for:

■ Worksite;

■ Type of scaffold;

■ Fall protection;

■ Falling object protection;

■ Other equipment.

[Statutory Authority: RCW 49.17.010, 49.17.040, 49.17.050, 49.17.060. 05-01-054, § 296-874-20076, filed 12/7/04, effective 3/1/05.]

WAC 296-874-300 Suspended scaffolds.

Section contents:

Your responsibility:

To meet these requirements when using suspended scaffolds.

Make sure suspended scaffolds and scaffold components meet these strength requirements

WAC 296-874-30002.

Make sure suspended scaffold outrigger beams meet these requirements

WAC 296-874-30004.

Make sure counterweights are safe and used properly

WAC 296-874-30006.

Make sure tiebacks meet these requirements

WAC 296-874-30008.

Make sure suspended scaffold support devices meet these requirements

WAC 296-874-30010.

Make sure scaffold hoists meet these requirements

WAC 296-874-30012.

Make sure scaffold hoists retain enough suspension rope

WAC 296-874-30014.

Make sure wire rope is in good condition

WAC 296-874-30016.

Make sure wire suspension rope connections meet these requirements

WAC 296-874-30018.

Make sure wire rope clips are used properly

WAC 296-874-30020.

Prevent swaying of two-point and multipoint suspension scaffolds

WAC 296-874-30022.

Use emergency escape and rescue devices appropriately

WAC 296-874-30024.

Protect suspension ropes from heat or corrosive substances

WAC 296-874-30026.

Take precautions while welding

WAC 296-874-30028.

Prohibit use of gasoline-powered equipment on suspended scaffolds

WAC 296-874-30030.

Meet these requirements when using catenary scaffolds

WAC 296-874-30032.

Meet these requirements when using float (ship) scaffolds

WAC 296-874-30034.

Meet these requirements when using interior hung scaffolds

WAC 296-874-30036.

Meet these requirements when using multilevel suspended scaffolds

WAC 296-874-30038.

Meet these requirements when using multipoint adjustable suspension scaffolds

WAC 296-874-30040

Meet these requirements when using needle beam scaffolds

WAC 296-874-30042.

Meet these requirements when using single-point adjustable suspension scaffolds

WAC 296-874-30044.

Meet these requirements when using two-point adjustable suspension scaffolds (swing stages)

WAC 296-874-30046.

[Statutory Authority: RCW 49.17.010, 49.17.040, 49.17.050, 49.17.060. 05-01-054, § 296-874-300, filed 12/7/04, effective 3/1/05.]

WAC 296-874-30002 Make sure suspended scaffolds and scaffold components meet these strength requirements.

You must:

• Meet the following strength requirements:

– Suspended scaffolds must support, without failure, the total of their own weight plus four times the maximum intended load;

– Suspended scaffold components must meet the requirements contained in Table 4, Suspended Scaffold Strength Requirements.

• Surfaces that support scaffold support devices must withstand four times the rated load of the hoist.

Note: Scaffold support devices include outrigger beams, cornice hooks, parapet clamps, and similar devices.

Table 4
Suspended Scaffold Strength Requirements

These scaffold components:	Must meet these strength requirements:
Adjustable scaffold – Suspension ropes, including connecting hardware	Support six times the rated load of the hoist.
Adjustable scaffold – Direct connections to roofs and floors – Counterweights used to balance the scaffold	Resist four times the tipping moment with the scaffold operating at the rated load of the hoist.
Nonadjustable scaffold – Suspension ropes, including connecting hardware	Support six times the maximum intended load applied or transmitted to the rope.
All other scaffold components	Support its own weight plus four times the maximum intended load.

[Statutory Authority: RCW 49.17.010, 49.17.040, 49.17.050, 49.17.060. 05-01-054, § 296-874-30002, filed 12/7/04, effective 3/1/05.]

WAC 296-874-30004 Make sure suspended scaffold outrigger beams meet these requirements.

You must:

• Make sure outrigger beams are made of structural metal or equivalent strength material.

• Stabilize the inboard ends of outrigger beams by using either:

– Bolts or other direct connections to the floor or roof deck;

OR

– Counterweights and tiebacks.

Exemption: Masons' multipoint adjustable scaffold outrigger beams **cannot** be stabilized by counterweights.

You must:

• Make sure, before the scaffold is used, that a competent person:

– Evaluates the direct connections;

AND

– Confirms that the supporting surfaces can support the loads placed on them.

• Make sure suspended scaffold outrigger beams are all of the following:

– Restrained to prevent moving;

– Provided with stop bolts or shackles at both ends;

– Securely fastened together with the flanges turned out when channel iron beams are used in place of I-beams;

– Set and maintained with the web in a vertical position;

– Placed so the suspension rope is centered over the stirrup.

• Place outrigger beams at a right angle (perpendicular) to their bearing support.

Exemption: Outrigger beams can be placed at other than a right angle (perpendicular) if:
- You can demonstrate that immovable obstructions make it impossible to place the beams at a right angle (perpendicular) to their bearing support;

AND

- Opposing angle tiebacks are used.

Note: The angle between the outrigger beam and the bearing support is usually the same as the angle between the outrigger beam and the face of the building or structure.

[Statutory Authority: RCW 49.17.010, 49.17.040, 49.17.050, 49.17.060. 05-01-054, § 296-874-30004, filed 12/7/04, effective 3/1/05.]

WAC 296-874-30006 Make sure counterweights are safe and used properly.

You must:

• Make sure counterweights:

– Are made of material that cannot flow;

AND

– Have been specifically designed to be used as counterweights.

Note: The following cannot be used as counterweights:
- Sand, gravel and similar materials that can be easily dislocated;
- Construction material such as masonry units and roofing felt.

You must:

• Secure counterweights to outrigger beams by mechanical means to prevent them from being accidentally detached.

• Leave counterweights attached to the outrigger beams until after the scaffold has been disassembled.

[Statutory Authority: RCW 49.17.010, 49.17.040, 49.17.050, 49.17.060. 05-01-054, § 296-874-30006, filed 12/7/04, effective 3/1/05.]

WAC 296-874-30008 Make sure tiebacks meet these requirements.

You must:

• Make sure tiebacks are equivalent in strength to the suspension ropes.

• Make sure tiebacks are secured to a structurally sound anchorage on the building or structure and installed:

– At a right angle (perpendicular) to the face of the building or structure;

OR

– As opposing angle tiebacks.

[Statutory Authority: RCW 49.17.010, 49.17.040, 49.17.050, 49.17.060. 05-01-054, § 296-874-30008, filed 12/7/04, effective 3/1/05.]

WAC 296-874-30010 Make sure suspended scaffold support devices meet these requirements.

You must:

• Make sure suspended scaffold support devices, such as cornice hooks, roof hooks, roof irons, parapet clamps, or similar devices, are:

– Made of steel, wrought iron, or other material of equivalent strength;

– Supported by bearing blocks;

– Prevented from moving by using tiebacks.

Reference:
- For outrigger beam requirements, go to WAC 296-874-30004;
- For tieback requirements go to WAC 296-874-30008.

[Statutory Authority: RCW 49.17.010, 49.17.040, 49.17.050, 49.17.060. 05-01-054, § 296-874-30010, filed 12/7/04, effective 3/1/05.]

WAC 296-874-30012 Make sure scaffold hoists meet these requirements.

You must:

• Make sure the stall load of any scaffold hoist is **not** more than three times its rated load.

• Make sure the design of scaffold hoists has been tested by an independent nationally recognized testing laboratory.

• Make sure scaffold hoists have both a:

– Normal operating brake;

AND

– Braking device or locking pawl which automatically engages when the hoist has an uncontrolled:

■ Instantaneous change in momentum;

OR

■ An accelerated overspeed.

• Prohibit use of gasoline-powered hoists on suspended scaffolds.

• Enclose the gears and brakes of power-operated hoists used on suspended scaffolds.

• Make sure manually operated hoists need a positive crank force to descend.

[Statutory Authority: RCW 49.17.010, 49.17.040, 49.17.050, 49.17.060. 05-01-054, § 296-874-30012, filed 12/7/04, effective 3/1/05.]

WAC 296-874-30014 Make sure scaffold hoists retain enough suspension rope.

You must:

• Make sure the suspension rope on winding drum hoists is long enough to wrap around the drum at least four times when the scaffold is at its lowest point of travel.

• Make sure the suspension rope on hoists that do **not** use a winding drum:

– Is long enough to allow the scaffold to be lowered to the level below without the rope end passing through the hoist;

OR

– Has the rope end configured, or uses other means, to prevent it from passing through the hoist.

[Statutory Authority: RCW 49.17.010, 49.17.040, 49.17.050, 49.17.060. 05-01-054, § 296-874-30014, filed 12/7/04, effective 3/1/05.]

WAC 296-874-30016 Make sure wire rope is in good condition. You must:

• Make sure a competent person inspects each rope for defects:

– Before each work shift;

AND

– After anything happens that could affect the rope's integrity.

• Replace a rope if it has any of the following:

– Physical damage which impairs the function and strength of the rope;

– Kinks that could impair the tracking or wrapping of the rope around a drum or sheave;

– Six randomly distributed broken wires in one rope lay;

– Three broken wires in one strand of one rope lay;

– Loss of more than one-third of the original diameter of the outside wires caused by abrasion, corrosion, scrubbing, flattening or peening;

– Heat damage caused by a torch;

– Any damage caused by contact with electrical wires;

– Evidence that the secondary brake has been activated during an overspeed condition and has engaged the suspension rope.

• Prohibit the use of repaired wire rope as suspension rope.

[Statutory Authority: RCW 49.17.010, 49.17.040, 49.17.050, 49.17.060. 05-01-054, § 296-874-30016, filed 12/7/04, effective 3/1/05.]

WAC 296-874-30018 Make sure wire suspension rope connections meet these requirements.

You must:

• Only use eye splice thimbles connected with shackles or cover plates and bolts to join wire suspension ropes together.

• Make sure the load ends of wire suspension ropes are:

– Equipped with proper size thimbles;

AND

– Secured by eye splicing or an equivalent means.

• Make sure all swaged attachments or spliced eyes on wire suspension rope have been made by either:

– The wire rope manufacturer;

OR

– A qualified person.

[Statutory Authority: RCW 49.17.010, 49.17.040, 49.17.050, 49.17.060. 05-01-054, § 296-874-30018, filed 12/7/04, effective 3/1/05.]

WAC 296-874-30020 Make sure wire rope clips are used properly.

You must:

• Make sure, if wire rope clips are used on suspended scaffolds, such as on the suspension ropes or support lines, that:

– A minimum of three clips are installed;

– The distance between clips is at least six rope diameters;

– Clips are installed according to the manufacturer's recommendations.

• Retighten the clips to the manufacturer's recommendations after the initial loading.

• Inspect the clips and retighten them to the manufacturer's recommendations at the start of each work shift.

• Make sure U-bolt clips are not used at the point of suspension for any scaffold hoist.

• Make sure, if U-bolt clips are used, that:

– The U-bolt is placed over the dead end of the rope;

AND

– The saddle is placed over the live end of the rope.

[Statutory Authority: RCW 49.17.010, 49.17.040, 49.17.050, 49.17.060. 05-01-054, § 296-874-30020, filed 12/7/04, effective 3/1/05.]

WAC 296-874-30022 Prevent swaying of two-point and multipoint suspension scaffolds.

You must:

• Tie or use other means to keep two-point and multipoint suspension scaffolds from swaying, if an evaluation by a competent person determines it is necessary.

Note: Window cleaners' anchors **cannot** be used to secure scaffolds since they are not designed to withstand the load.

[Statutory Authority: RCW 49.17.010, 49.17.040, 49.17.050, 49.17.060. 05-01-054, § 296-874-30022, filed 12/7/04, effective 3/1/05.]

WAC 296-874-30024 Use emergency escape and rescue devices appropriately.

You must:

• Make sure devices whose sole function is to provide emergency escape and rescue are not used as working platforms.

Note: Systems which are designed to function both as suspended scaffolds and emergency systems may be used as working platforms.

[Statutory Authority: RCW 49.17.010, 49.17.040, 49.17.050, 49.17.060. 05-01-054, § 296-874-30024, filed 12/7/04, effective 3/1/05.]

WAC 296-874-30026 Protect suspension ropes from heat or corrosive substances.

You must:

• Shield suspension ropes from heat-producing processes.

• Make sure, when acids or other corrosive substances are used on a scaffold, that the suspension ropes are protected by at least one of the following:

– Shielding;

– Treating to protect the rope from the corrosive substances;

– Making the rope of material that the corrosive substance will not damage.

[Statutory Authority: RCW 49.17.010, 49.17.040, 49.17.050, 49.17.060. 05-01-054, § 296-874-30026, filed 12/7/04, effective 3/1/05.]

WAC 296-874-30028 Take precautions while welding.

You must:

• Do the following to protect employees while welding on suspended scaffolds:

– Use an insulated thimble to attach each suspension wire rope to its hanging support, such as a cornice hook or outrigger;

– Insulate excess suspension wire rope and any additional independent lines to prevent grounding;

– Cover the wire suspension rope with insulating material that extends at least four feet (1.2 m) above the hoist;

– Make sure any tail line that extends below the hoist is:

■ Insulated to prevent contact with the platform;

AND

■ Guided or retained so it does not become grounded.

– Cover each hoist with an insulated protective cover;

– Connect the scaffold to the structure using a grounding conductor that:

■ Is at least the size of the welding process work lead;

AND

■ Is not in series with the welding process or the work piece.

– Shut off the welding machine if the scaffold grounding lead becomes disconnected;

– Make sure an active welding rod or an uninsulated welding lead is not allowed to contact the:

■ Scaffold;

OR

■ Scaffold suspension system.

[Statutory Authority: RCW 49.17.010, 49.17.040, 49.17.050, 49.17.060. 05-01-054, § 296-874-30028, filed 12/7/04, effective 3/1/05.]

WAC 296-874-30030 Prohibit use of gasoline-powered equipment on suspended scaffolds.

You must:

• Make sure gasoline-powered equipment is **not** used on suspended scaffolds.

[Statutory Authority: RCW 49.17.010, 49.17.040, 49.17.050, 49.17.060. 05-01-054, § 296-874-30030, filed 12/7/04, effective 3/1/05.]

WAC 296-874-30032 Meet these requirements when using catenary scaffolds.

You must:

• Make sure catenary scaffolds have:

– No more than one platform between consecutive vertical pickups;

AND

– No more than two platforms per scaffold.

• Make sure any platform that's supported by wire ropes has hook-shaped stops placed at each end of the platform that will prevent it from falling if one of the horizontal wire ropes breaks.

• Make sure wire ropes are:

– Continuous and without splices between anchors;

AND

– Not tightened to the point that putting a load on the scaffold will overstress them.

Reference: For specific fall protection requirements for employees on catenary scaffolds, go to WAC 296-874-20056.

[Statutory Authority: RCW 49.17.010, 49.17.040, 49.17.050, 49.17.060. 05-01-054, § 296-874-30032, filed 12/7/04, effective 3/1/05.]

WAC 296-874-30034 Meet these requirements when using float (ship) scaffolds.

You must:

• Support the platform with at least two bearers.

• Make sure each bearer:

– Projects at least six inches (15.2 cm) beyond the platform on both sides;

AND

– Is securely fastened to the platform.

• Make sure rope connections won't allow the platform to shift or slip.

• Make sure scaffolds that only have two ropes used with each float meet all of the following:

– There are four rope ends that are securely fastened to overhead supports;

– Each supporting rope is hitched around one end of the bearer, passed under the platform to the other end of the bearer, and hitched again;

– There is enough rope at each end for the supporting ties.

Reference: For specific fall protection requirements for employees on float (ship) scaffolds, go to WAC 296-874-20056.

[Statutory Authority: RCW 49.17.010, 49.17.040, 49.17.050, 49.17.060. 05-01-054, § 296-874-30034, filed 12/7/04, effective 3/1/05.]

WAC 296-874-30036 Meet these requirements when using interior hung scaffolds.

You must:

• Suspend the scaffold only from the roof structure or other structural member, such as ceiling beams.

• Inspect the overhead supporting members and check to make sure they're strong enough before erecting the scaffold.

• Connect suspension ropes and cables to the overhead supporting members by:

– Shackles, clips, or thimbles;

OR

– Other means that meet equivalent criteria, such as strength and durability.

[Statutory Authority: RCW 49.17.010, 49.17.040, 49.17.050, 49.17.060. 05-01-054, § 296-874-30036, filed 12/7/04, effective 3/1/05.]

WAC 296-874-30038 Meet these requirements when using multilevel suspended scaffolds.

You must:

• Equip scaffolds with additional independent support lines that meet all of the following:

– There are the same number of support lines as there are connection points for the suspension ropes;

– The support lines are equivalent in strength to the suspension ropes;

– The support lines are rigged to support the scaffold if the suspension ropes fail.

• Make sure the independent support lines and the suspension ropes are not attached to the same points of anchorage.

• Attach platform supports directly to the support stirrup and not to another platform.

[Statutory Authority: RCW 49.17.010, 49.17.040, 49.17.050, 49.17.060. 05-01-054, § 296-874-30038, filed 12/7/04, effective 3/1/05.]

WAC 296-874-30040 Meet these requirements when using multipoint adjustable suspension scaffolds.

IMPORTANT:

This requirement applies when using multipoint adjustable suspension scaffolds, stonesetters' multipoint adjustable suspension scaffolds, and masons' multipoint adjustable suspension scaffolds.

You must:

• Make sure masons' multipoint adjustable suspension scaffold connections are designed by an engineer experienced in designing this type of scaffold.

• Make sure bridges between two or more scaffolds meet all of the following:

– The scaffolds were designed to be bridged;

– The bridges are articulated;

– The hoists are properly sized.

• Make sure passage from one platform to another, without using bridges, is done only when the platforms are:

– At the same height;

AND

– Abutting.

• Suspend scaffolds from:

– Metal outriggers, brackets, wire rope slings, or hooks;

OR

– Other means that meet equivalent criteria, such as strength and durability.

[Statutory Authority: RCW 49.17.010, 49.17.040, 49.17.050, 49.17.060. 05-01-054, § 296-874-30040, filed 12/7/04, effective 3/1/05.]

WAC 296-874-30042 Meet these requirements when using needle beam scaffolds.

You must:

• Install scaffold support beams on edge.

• Use ropes or hangers for scaffold supports:

– One end of a needle beam scaffold may be supported by a permanent structural member.

• Securely attach ropes to the needle beams.

• Arrange the support connection to prevent the needle beam from rolling or becoming displaced.

• Securely attach platform units to the needle beams with bolts or equivalent means.

Note: Cleats and overhang are not adequate means of attachment.

Reference: For specific fall protection requirements for employees on needle beam scaffolds, go to WAC 296-874-20056.

[Statutory Authority: RCW 49.17.010, 49.17.040, 49.17.050, 49.17.060. 05-01-054, § 296-874-30042, filed 12/7/04, effective 3/1/05.]

WAC 296-874-30044 Meet these requirements when using single-point adjustable suspension scaffolds.

You must:

• Make sure two scaffolds that have been combined to form a two-point adjustable suspension scaffold meet the requirements of the section. Make sure two-point adjustable suspension scaffolds (swing stages) meet these requirements, WAC 296-874-30046.

• Make sure scaffolds, where the suspension rope between the scaffold and the suspension device is not vertical, meet all of the following:

– The rigging has been designed by a qualified person;

– The scaffold is accessible to rescuers;

– The suspension rope is protected from chafing at any point where it changes direction;

– The scaffold is positioned so that swinging cannot bring the scaffold into contact with another surface.

• Make sure boatswain's chair tackle meets all of the following:

– It consists of correct size ball bearing blocks or bushed blocks;

– The blocks contain safety hooks;

– The rope is properly eye spliced;

– The rope is either:

■ First-grade manila rope that has a diameter of at least five-eighths inch (1.6 cm);

OR

■ Other rope that has equivalent characteristics, such as strength and durability.

• Make sure boatswain's chair seat slings meet all of the following:

– Are reeved through four corner holes in the seat;

– Cross each other on the underside of the seat;

– Are rigged to prevent slipping which could cause the seat to become out-of-level;

– Are made from fiber, synthetic, or other rope which have:

■ A diameter of at least five-eighths inch (1.6 cm);

AND

■ Characteristics equivalent to first grade manila rope, such as strength, slip resistance, and durability.

• Make sure the seat sling of boatswain's chairs used when a heat-producing process, such as gas or arc welding, is being conducted is at least three-eighths inch (1.0 cm) wire rope.

• Securely fasten cleats to the underside of noncross-laminated wood boatswain's chairs to prevent the board from splitting.

Reference: For specific fall protection requirements for employees on single-point adjustable suspension scaffolds, go to WAC 296-874-20056.

[Statutory Authority: RCW 49.17.010, 49.17.040, 49.17.050, 49.17.060. 05-01-054, § 296-874-30044, filed 12/7/04, effective 3/1/05.]

WAC 296-874-30046 Meet these requirements when using two-point adjustable suspension scaffolds (swing stages).

IMPORTANT:

This section does not apply to two-point adjustable suspension scaffolds used as masons' or stonesetters' scaffolds.

Reference: For requirements for masons' or stonesetters' scaffolds, go to WAC 296-874-30040.

You must:

• Make sure platforms more than thirty-six inches (0.9 m) wide have been designed by a qualified person to prevent unstable conditions.

• Make sure platforms are one of the following:

– Ladder-type;

– Plank-type;

– Beam-type;

– Light-metal type.

• Make sure the design of light-metal type platforms have been tested and listed by a nationally recognized testing laboratory if they:

– Have a rated capacity of seven hundred fifty pounds or less;

OR

– Have a length of forty feet (12.2 m) or less.

• Securely fasten the platform to the hangers (stirrups) using U-bolts or other means that satisfy the section titled, Make sure suspended scaffolds and scaffold components meet these strength requirements, WAC 296-874-30002.

• Make sure fiber or synthetic ropes are used with blocks that:

– Consist of at least one double and one single block;

AND

– Have sheaves that fit the size of the rope used.

• Make sure employees move from one platform to another only when all of the following are met:

– The platforms are at the same height;

– The platforms are abutting;

– Walk-through stirrups are used that have been specifically designed to allow employee passage.

• Make sure two-point scaffolds that are bridged or otherwise connected together when being raised or lowered meet both of the following:

– The bridge connections are articulated;

– The hoists are properly sized.

Reference: For specific fall protection requirements for employees on two-point adjustable suspension scaffolds, go to WAC 296-874-20056.

[Statutory Authority: RCW 49.17.010, 49.17.040, 49.17.050, 49.17.060. 05-01-054, § 296-874-30046, filed 12/7/04, effective 3/1/05.]

WAC 296-874-400 Supported scaffolds.

Section contents:

Your responsibility:

To meet these requirements when using supported scaffolds.

Make sure supported scaffolds and scaffold components meet strength requirements

WAC 296-874-40002.

Prevent supported scaffolds from tipping

WAC 296-874-40004.

Make sure supported scaffolds are properly supported

WAC 296-874-40006.

Provide safe access for persons erecting or dismantling supported scaffolds

WAC 296-874-40008.

Provide fall protection for persons erecting or dismantling supported scaffolds

WAC 296-874-40010.

Meet these requirements when moving mobile scaffolds

WAC 296-874-40012.

Meet these requirements when using bricklayers' square scaffolds (squares)

WAC 296-874-40014.

Meet these requirements when using crawling boards (chicken ladders)

WAC 296-874-40016.

Meet these requirements when using fabricated frame scaffolds (tubular welded frame scaffolds)

WAC 296-874-40018.

Meet these requirements when using integral prefabricated scaffold access frames

WAC 296-874-40020.

Meet these requirements when using form scaffolds and carpenter's bracket scaffolds

WAC 296-874-40022.

Meet these requirements when using horse scaffolds

WAC 296-874-40024.

Meet these requirements when using ladder jack scaffolds

WAC 296-874-40026.

Meet these requirements when using outrigger scaffolds

WAC 296-874-40028.

Meet these requirements when using pole scaffolds

WAC 296-874-40030.

Meet these requirements when using pump jack scaffolds

WAC 296-874-40032.

Meet these requirements when using repair bracket scaffolds

WAC 296-874-40034.

Meet these requirements when using roof bracket scaffolds

WAC 296-874-40036.

Meet these requirements when using step, platform, and trestle ladder scaffolds

WAC 296-874-40038.

Meet these requirements when using tube and coupler scaffolds

WAC 296-874-40040.

Meet these requirements when using window jack scaffolds

WAC 296-874-40042.

[Statutory Authority: RCW 49.17.010, 49.17.040, 49.17.050, 49.17.060. 05-01-054, § 296-874-400, filed 12/7/04, effective 3/1/05.]

WAC 296-874-40002 Make sure supported scaffolds and scaffold components meet strength requirements.

You must:

• Make sure each supported scaffold and scaffold component can support, without failure, the total of its own weight plus at least four times the maximum intended load applied or transmitted to it.

[Statutory Authority: RCW 49.17.010, 49.17.040, 49.17.050, 49.17.060. 05-01-054, § 296-874-40002, filed 12/7/04, effective 3/1/05.]

WAC 296-874-40004 Prevent supported scaffolds from tipping.

You must:

• Make sure supported scaffolds with a height to least base dimension ratio of greater than four to one are prevented from tipping by one or more of the following:

– Guying;

– Tying;

– Bracing;

– Other equivalent means.

Note: The least base dimension includes outriggers, if used.

You must:

• Install guys, ties, and braces where horizontal members support both the inner and outer legs of the scaffold.

• Install guys, ties, and braces:

– According to the scaffold manufacturer's recommendations;

OR

– At all points where the following horizontal and vertical planes meet:

■ First vertical level at a height equal to four times the least base dimension;

■ Subsequent vertical levels every:

❖ Twenty feet (6.1 m) or less for scaffolds having a width of three feet (0.91 m) or less;

❖ Twenty six feet (7.9 m) or less for scaffolds more than three feet (0.91 m) wide;

■ Horizontally at:

❖ Each end of the scaffold;

AND

❖ Intervals of thirty feet (9.1 m) or less.

Note: The thirty-foot horizontal intervals are measured from one end of the scaffold to the other.

You must:

• Make sure the highest level of guys, ties, or braces is no further from the top of the scaffold than a distance equal to four times the least base dimension.

• Make sure scaffolds that have an eccentric load applied or transmitted to them, such as a cantilevered work platform, are prevented from tipping by one or more of the following:

– Guying;

– Tying;

– Bracing;

– Outriggers;

– Other equivalent means.

[Statutory Authority: RCW 49.17.010, 49.17.040, 49.17.050, 49.17.060. 05-01-054, § 296-874-40004, filed 12/7/04, effective 3/1/05.]

WAC 296-874-40006 Make sure supported scaffolds are properly supported.

You must:

• Make sure supported scaffold poles, legs, posts, frames, and uprights are:

– Plumb;

AND

– Braced to prevent swaying or displacement.

• Make sure supported scaffold poles, legs, posts, frames, and uprights, bear on base plates that rest on:

– Mudsills;

OR

– Other firm foundations such as concrete or dry, compacted soil.

• Make sure foundations are all of the following:

– Level;

– Sound;

– Rigid;

– Capable of supporting the loaded scaffold without settling or displacement.

Note: The condition of the foundation may change due to weather or other factors. If changes occur, the foundation needs to be evaluated by a competent person to make sure it will safely support the scaffold.

• Make sure unstable objects are not used:

– To support scaffolds or platform units;

OR

– As working platforms.

• Make sure mobile scaffolds meet these additional requirements:

– Wheel and caster stems are pinned or otherwise secured in the scaffold legs or adjustment screws;

– Wheels and casters are locked, or equivalent means are used, to prevent movement when the scaffold is being used;

– Screw jacks or other equivalent means are used if it's necessary to level the work platform.

• Make sure front-end loaders and similar equipment used to support scaffold platforms have been specifically designed for such use by the manufacturer.

Reference: For requirements about powered industrial trucks, including forklifts that are used to support scaffold platforms, go to Powered industrial trucks, chapter 296-863 WAC.

[Statutory Authority: RCW 49.17.010, 49.17.040, 49.17.050, 49.17.060. 05-01-054, § 296-874-40006, filed 12/7/04, effective 3/1/05.]

WAC 296-874-40008 Provide safe access for persons erecting or dismantling supported scaffolds.

You must:

• Provide a safe means of access for persons erecting or dismantling scaffolds if it is:

– Feasible;

AND

– Does **not** create a greater hazard.

• Have a competent person determine the feasibility of providing safe access.

• Make sure the determination is based on site conditions and the type of scaffold being erected or dismantled.

• Install a hook-on or attachable ladder as soon as scaffold erection has progressed to a point where it can be safely installed and used.

• Make sure crossbraces on tubular welded frame scaffolds are not used to access or egress from the scaffold.

• Make sure the frames of tubular welded frame scaffolds that are used as climbing devices meet all of the following:

– Create a usable ladder;

– Provide good hand holds and foot space;

– Have horizontal members that are all of the following:

■ Parallel;

■ Level;

■ Spaced not more than twenty two inches apart vertically.

[Statutory Authority: RCW 49.17.010, 49.17.040, 49.17.050, 49.17.060. 05-01-054, § 296-874-40008, filed 12/7/04, effective 3/1/05.]

WAC 296-874-40010 Provide fall protection for persons erecting or dismantling supported scaffolds.

You must:

• Have a competent person determine the feasibility of providing fall protection for persons erecting or dismantling supported scaffolds.

• Provide fall protection if the installation and use of fall protection is:

– Feasible;

AND

– Does **not** create a greater hazard.

[Statutory Authority: RCW 49.17.010, 49.17.040, 49.17.050, 49.17.060. 05-01-054, § 296-874-40010, filed 12/7/04, effective 3/1/05.]

WAC 296-874-40012 Meet these requirements when moving mobile scaffolds.

You must:

• Make sure, before a scaffold is moved, that employees on the scaffold are made aware of the move.

• Apply manual force being used to move a scaffold:

– As close to the base as practicable;

AND

– Within five feet (1.5 m) of the supporting surface.

• Make sure power systems used to propel mobile scaffolds have been designed for such use.

• Make sure forklifts, trucks, similar motor vehicles, or add-on motors are not used to propel scaffolds unless the scaffold has been designed to be used with that type of propulsion system.

• Stabilize scaffolds to prevent tipping when they're being moved.

• Make sure a scaffold is not moved with employees riding on it unless all of the following are met:

– The surface on which the scaffold is being moved is:

■ Within three degrees of level;

AND

■ Free of pits, holes, and obstructions;

– No employee is on any part of the scaffold which extends out beyond the wheels, casters, or other supports;

– Outrigger frames, when used, are installed on both sides of the scaffold;

– The power system, if used:

■ Applies the propelling force directly to the wheels;

AND

■ Produces a speed of one foot per second (.3 mps) or less;

– The height of the scaffold:

■ Is not more than two times the least base dimension;

OR

■ The scaffold is designed and constructed to meet or exceed nationally recognized stability test requirements, such as those listed in ANSI/SIA A92.5, Boom-Supported Elevating Work Platforms, and ANSI/SIA A92.6, Self-Propelled Elevating Work Platforms.

[Statutory Authority: RCW 49.17.010, 49.17.040, 49.17.050, 49.17.060. 05-01-054, § 296-874-40012, filed 12/7/04, effective 3/1/05.]

WAC 296-874-40014 Meet these requirements when using bricklayers' square scaffolds (squares).

You must:

• Reinforce wood scaffolds with gussets on both sides of each corner.

• Make sure diagonal braces are installed:

– On all sides of each square;

– Between squares on the front and back sides of the scaffold;

– Extending from the bottom of each square to the top of the next square.

• Make sure scaffolds meet all of the following:

– Are no more than three tiers high;

– Are constructed and arranged so that each square rests directly above another square;

– The upper tiers:

■ Stand on a continuous row of planks laid across the next lower tier;

AND

■ Are nailed down or otherwise secured to prevent displacement.

[Statutory Authority: RCW 49.17.010, 49.17.040, 49.17.050, 49.17.060. 05-01-054, § 296-874-40014, filed 12/7/04, effective 3/1/05.]

WAC 296-874-40016 Meet these requirements when using crawling boards (chicken ladders).

You must:

• Make sure crawling boards (chicken ladders) extend from the roof peak to the eaves when used for roof construction, repair, or maintenance.

• Secure crawling boards (chicken ladders) to the roof by using either:

– Ridge hooks;

OR

– Means that meet equivalent criteria, such as strength and durability.

Reference: There are specific fall protection requirements for employees using crawling boards (chicken ladders). Go to WAC 296-874-20058.

[Statutory Authority: RCW 49.17.010, 49.17.040, 49.17.050, 49.17.060. 05-01-054, § 296-874-40016, filed 12/7/04, effective 3/1/05.]

WAC 296-874-40018 Meet these requirements when using fabricated frame scaffolds (tubular welded frame scaffolds).

You must:

• Make sure scaffolds over one hundred twenty-five feet (38.0 m) high above their base plates are:

– Designed by a registered professional engineer;

AND

– Constructed and loaded as specified in the design.

• Brace frames and panels using crossbraces, horizontal braces, diagonal braces, or a combination thereof to secure vertical members together laterally.

• Make sure the length of the crossbraces will:

– Automatically square and align the vertical members;

AND

– Make the scaffold plumb, level, and square.

• Secure all brace connections.

• Join frames and panels together vertically by using one of the following:

– Coupling pins;

– Stacking pins;

– Equivalent means.

• Use pins or other equivalent means to lock scaffold frames or panels together vertically where uplift may occur.

• Make sure brackets used to support cantilevered loads are all of the following:

– Seated with side-brackets parallel to the frames and end-brackets at ninety degrees to the frames;

– Not bent or twisted from these positions;

– Used only to support persons.

Exemption: Brackets may be used to support cantilevered loads other than personnel if the scaffold has been:

- Designed for other loads by a qualified engineer;

AND

- Built to withstand the tipping forces caused by those loads.

You must:

• Leave existing platforms undisturbed until new frames have been set in place and braced, then move the platforms to the next level.

[Statutory Authority: RCW 49.17.010, 49.17.040, 49.17.050, 49.17.060. 05-01-054, § 296-874-40018, filed 12/7/04, effective 3/1/05.]

WAC 296-874-40020 Meet these requirements when using integral prefabricated scaffold access frames.

You must:

• Make sure integral prefabricated scaffold access frames meet all of the following:

– Have been specifically designed and constructed to be used as ladder rungs;

– Have a rung length of at least eight inches (20 cm);

– Have a maximum spacing between rungs of sixteen and three quarters inches (43 cm);

– Are uniformly spaced within each frame section;

– Have rest platforms at least every twenty feet (6.1 m) on all supported scaffolds more than twenty-four feet (7.3 m) high.

Note: Nonuniform rung spacing caused by joining end frames together is allowed, provided the resulting spacing does not exceed sixteen and three quarters inches (43 cm).

You must:

• Make sure, when panels with rungs that are less than eleven and one-half inches long are used as work platforms, that employees use either:

– A positioning device;

OR

– A personal fall arrest system.

Reference:
- For personal fall arrest system requirements in this chapter, go to WAC 296-874-20058.
- For construction activities, go to fall restraint and fall arrest, Part C-1, in safety standards for construction work, chapter 296-155 WAC.

[Statutory Authority: RCW 49.17.010, 49.17.040, 49.17.050, 49.17.060. 05-01-054, § 296-874-40020, filed 12/7/04, effective 3/1/05.]

WAC 296-874-40022 Meet these requirements when using form scaffolds and carpenter's bracket scaffolds.

You must:

• Secure folding-type metal brackets that have been extended for use, with:

– Bolts;

OR

– Locking-type pins.

• Make sure wooden-bracket form scaffolds are an integral part of the form panel.

• Attach each bracket, other than those for wooden bracket-form scaffolds, to the supporting formwork or structure by using one or more of the following:

– Nails;

– A metal stud attachment device;

– Welding;

– Hooking over a secured structural supporting member, with the form wales either:

■ Bolted to the form;

OR

■ Secured by snap ties or tie bolts extending through the form and securely anchored.

– For carpenters' bracket scaffolds only, using a bolt extending through to the opposite side of the structure's wall.

[Statutory Authority: RCW 49.17.010, 49.17.040, 49.17.050, 49.17.060. 05-01-054, § 296-874-40022, filed 12/7/04, effective 3/1/05.]

WAC 296-874-40024 Meet these requirements when using horse scaffolds.

You must:

• Make sure horse scaffolds are not constructed or arranged higher than two tiers or ten feet (3.0 m), whichever is less.

• Do all of the following if horses are arranged in tiers:

– Place each horse directly over the horse in the tier below;

– Nail down or otherwise secure the legs of each horse to prevent displacement;

– Crossbrace each tier.

[Statutory Authority: RCW 49.17.010, 49.17.040, 49.17.050, 49.17.060. 05-01-054, § 296-874-40024, filed 12/7/04, effective 3/1/05.]

WAC 296-874-40026 Meet these requirements when using ladder jack scaffolds.

You must:

• Make sure the platform height is not higher than twenty feet (6.1 m).

• Make sure ladder jacks are designed and constructed so they rest:

– On the side rails and ladder rungs together;

OR

– Only on the rungs.

• Make sure ladder jacks that rest on rungs only have a bearing area that includes a length of at least ten inches (25.4 cm) on each rung.

• Make sure ladders used to support ladder jacks are:

– Type I (two hundred fifty pound rated capacity) or Type IA (300 pound rated capacity);

AND

– Are placed, fastened, or equipped with devices to prevent slipping.

Note: Ladders with a duty rating or weight capacity greater than a Type I ladder (250 pounds) satisfy the requirement to use a Type I or Type IA ladder.

You must:

• Make sure job-made ladders are not used to support ladder jack scaffolds.

• Make sure scaffold platforms are not bridged together.

Reference:
- There are specific fall protection requirements for employees using ladder jack scaffolds. Go to WAC 296-874-20056.
- Requirements for wood and metal ladders for general industry activities are found in other chapters:
  - Portable ladders: Metal and wooden, WAC 296-800-290, are found in the safety and health core rules, chapter 296-800 WAC;
  - Portable wood ladders, WAC 296-24-780, and portable metal ladders, WAC 296-24-795, are found in Working surfaces, guarding floors and wall openings, ladders, Part J-1, in the general safety and health standards, chapter 296-24 WAC.
- For construction activities, go to Ladders, WAC 296-155-480, in the safety standards for construction work, chapter 296-155.

[Statutory Authority: RCW 49.17.010, 49.17.040, 49.17.050, 49.17.060. 05-01-054, § 296-874-40026, filed 12/7/04, effective 3/1/05.]

WAC 296-874-40028 Meet these requirements when using outrigger scaffolds.

You must:

• Make sure outrigger scaffolds and scaffold components are:

– Designed by a registered professional engineer;

AND

– Constructed and loaded as specified in the design.

• Make sure the part of the outrigger beam from the fulcrum point to the inboard end (farthest point of anchorage) is at least one and one-half times longer than the part from fulcrum point to the outboard end (the platform side).

• Place I-beam or channel shaped outrigger beams so that the web section is vertical.

• Make sure the fulcrum point of outrigger beams rests on secure bearings at least six inches (15.2 cm) in each horizontal dimension.

• Make sure outrigger beams are:

– Secured in place to prevent movement;

AND

– Securely braced at the fulcrum point against tipping.

• Securely anchor the inboard ends of outrigger beams by using one or both of the following:

– Braced struts bearing against sills that are in contact with the overhead beams or ceiling;

OR

– Tension members secured to the floor joists below.

• Securely brace the entire supporting structure to prevent any horizontal movement.

• Nail, bolt, or otherwise secure platform units to the outriggers to prevent platform displacement. Platform units must extend to within three inches of the building wall.

[Statutory Authority: RCW 49.17.010, 49.17.040, 49.17.050, 49.17.060. 05-01-054, § 296-874-40028, filed 12/7/04, effective 3/1/05.]

WAC 296-874-40030 Meet these requirements when using pole scaffolds.

You must:

• Make sure pole scaffolds over sixty feet high are:

– Designed by a registered professional engineer;

AND

– Constructed and loaded as specified in the design.

• Leave existing platforms undisturbed until new bearers have been set in place and braced before moving the platforms to the new level.

• Install bracing on double-pole scaffolds as follows:

– Crossbracing between the inner and outer sets of poles;

– Diagonal bracing in both directions across the entire outside face of the scaffold;

– Diagonal bracing in both directions across the entire inside face of scaffolds that are used to support loads equivalent to a uniformly distributed load of fifty pounds (222 kg) or more per square foot (929 square cm).

• Install diagonal bracing on single pole scaffolds in both directions across the entire outside face of the scaffold.

• Make sure runners meet all of the following:

– Are installed on edge;

– Extend over a minimum of two poles;

– Are supported by bearing blocks securely attached to the poles.

• Make sure bearers are:

– Installed on edge;

AND

– Extend a minimum of three inches (7.6 cm) over the outside edges of runners.

• Make sure runners, bearers, and braces are not spliced between poles.

• Make sure wood poles that are spliced together meet both of the following:

– The ends of the poles at the splice:

■ Are square;

AND

■ The upper section rests squarely on the lower section.

– Wood splice plates are provided that meet all of the following:

■ Are installed on at least two adjacent sides;

■ Extend at least two feet (0.6 m) on either side of the splice;

■ Overlap the abutted ends equally;

■ Have the same cross-sectional areas as the pole.

Note: Splice plates of material other than wood may be used if they are of equivalent strength.

[Statutory Authority: RCW 49.17.010, 49.17.040, 49.17.050, 49.17.060. 05-01-054, § 296-874-40030, filed 12/7/04, effective 3/1/05.]

WAC 296-874-40032 Meet these requirements when using pump jack scaffolds.

You must:

• Make sure pump jack brackets, braces, and accessories are made from metal plates and angles.

• Make sure pump jack brackets have two positive gripping mechanisms to prevent any failure or slippage.

• Secure poles to the structure using rigid triangular bracing or the equivalent located at all of the following:

– Top;

– Bottom;

– Other points on the pole as necessary.

• Do both of the following when the pump jack has to pass bracing that's already installed:

– Install an additional brace approximately four feet (1.2 m) above the brace to be passed;

– Leave it in place until:

■ The pump jack has been moved;

AND

■ The original brace is reinstalled.

• Make sure work benches are not used as scaffold platforms.

Note: A work bench may be used as a toprail only if it meets the toprail requirements in Make sure guardrail systems meet these requirements, WAC 296-874-20064.

You must:

• Make sure wood poles used with pump jack scaffolds are:

– Straight grained;

AND

– Free of shakes, large loose or dead knots, and other defects which might impair strength.

• Make sure wood poles that are constructed of two continuous lengths are joined together with the seam parallel to the bracket.

• Install a mending plate at all splices to develop the full strength of the member when splicing two by fours together to make a pole.

[Statutory Authority: RCW 49.17.010, 49.17.040, 49.17.050, 49.17.060. 05-01-054, § 296-874-40032, filed 12/7/04, effective 3/1/05.]

WAC 296-874-40034 Meet these requirements when using repair bracket scaffolds.

You must:

• Make sure brackets are all of the following:

– Secured in place by at least one wire rope that's at least one-half inch (1.27 cm) in diameter;

– Attached to the securing wire rope by a positive locking device, or equivalent, that will prevent the bracket from being unintentionally detached from the rope;

– Provided with a shoe, heel block, foot, or a combination that:

■ Is located at the contact point between the supporting structure and the bottom of the bracket;

AND

■ Will prevent lateral movement of the bracket.

• Secure the platforms to the brackets in a way that prevents:

– The platforms from separating from the brackets;

AND

– The platforms or brackets from moving on a completed scaffold.

• Make sure wire rope placed around the structure to provide a safe anchorage for personal fall arrest systems used by employees erecting or dismantling scaffolds:

– Is at least five-sixteenths inch (0.8 cm) in diameter;

– Provides an anchorage that meets the requirements of WAC 296-874-20058.

■ For construction activities, go to fall restraint and fall arrest, Part C-1, in the safety standards for construction work, chapter 296-155 WAC.

• Make sure each wire rope used for securing brackets in place or as an anchorage for personal fall arrest systems is all of the following:

– Protected from damage due to contact with edges, corners, protrusions, or other parts of the supporting structure or scaffold components;

– Tensioned by a turnbuckle or equivalent means. Turnbuckles must be:

■ At least one inch (2.54 cm) in diameter;

AND

■ Connected to the other end of its rope by an eye splice thimble that's sized appropriate to the turnbuckle.

– **Not** used with U-bolt wire rope clips.

• Make sure materials are not dropped to the outside of the supporting structure.

• Erect the scaffold by progressing around the structure in only one direction.

[Statutory Authority: RCW 49.17.010, 49.17.040, 49.17.050, 49.17.060. 05-01-054, § 296-874-40034, filed 12/7/04, effective 3/1/05.]

WAC 296-874-40036 Meet these requirements when using roof bracket scaffolds.

You must:

• Make sure scaffold brackets meet all of the following:

– Are constructed to fit the pitch of the roof;

– Provide a level support for the platform;

– Are anchored in place by nails.

Note: If it's not practical to use nails to anchor brackets, secure them in place with first grade manila rope of at least three-quarters inch (1.9 cm) diameter, or equivalent.

[Statutory Authority: RCW 49.17.010, 49.17.040, 49.17.050, 49.17.060. 05-01-054, § 296-874-40036, filed 12/7/04, effective 3/1/05.]

WAC 296-874-40038 Meet these requirements when using step, platform and trestle ladder scaffolds.

You must:

• Make sure ladders used to support step, platform, and trestle ladder scaffolds are:

– Type I (250 pound rated capacity) or Type IA (300 pound rated capacity);

AND

– Placed, fastened, or equipped with devices to prevent slipping.

Note: Ladders with a duty rating or weight capacity greater than a Type I ladder (250 pounds) satisfy the requirement to use a Type I or Type IA ladder.

You must:

• Make sure job-made ladders are not used to support step, platform, and trestle ladder scaffolds.

Reference:
- There are specific fall protection requirements for employees using ladder jack scaffolds. Go to WAC 296-874-20056.
- Requirements for wood and metal ladders are found in other chapters:
  - For general industry activities, go to the following:
    - The safety and health core rules, chapter 296-800 WAC, and find portable ladders: Metal and wooden, WAC 296-800-290.
    - Working surfaces, guarding floors and wall openings, ladders, chapter 296-24 WAC, Part J-1, and find Portable wood ladders, WAC 296-24-780, **and** Portable metal ladders, WAC 296-24-795.
  - For construction activities, go to the safety standards for construction work, and find ladders, WAC 296-155-480.

You must:

• Make sure scaffold platforms are not placed higher than the second highest rung or step of the ladder supporting the platform.

• Make sure scaffold platforms are not bridged together.

[Statutory Authority: RCW 49.17.010, 49.17.040, 49.17.050, 49.17.060. 05-01-054, § 296-874-40038, filed 12/7/04, effective 3/1/05.]

WAC 296-874-40040 Meet these requirements when using tube and coupler scaffolds.

You must:

• Make sure tube and coupler scaffolds over one hundred twenty-five feet high are:

– Designed by a registered professional engineer;

AND

– Constructed and loaded as specified in the design.

• Leave existing platforms undisturbed until new bearers have been set in place and braced before moving the platforms to the new level.

• Install crossbracing across the width of the scaffold that meets all of the following:

– Bracing is installed at:

■ Each end of the scaffold;

AND

■ At least at every third set of posts horizontally and every fourth runner vertically.

– Bracing extends diagonally from the:

■ Outer posts or runners upwards to the next inner posts or runners;

AND

■ Inner posts or runners upwards to the next outer posts or runners.

• Install building ties:

– At the bearer levels between the crossbracing;

AND

– At locations specified in WAC 296-874-40004.

• Install longitudinal bracing on straight run scaffolds as follows:

– Diagonally in both directions across the inner and outer rows of posts;

– From the base of the end posts upward to the top of the scaffold at approximately a forty-five degree angle;

– As close as possible to the intersection of the bearer and post or runner and post;

– If the scaffold is longer than it is tall, repeat the bracing beginning at every fifth post;

– If the scaffold is taller than its length, install the bracing:

■ From the base of the end posts upward to the opposite end posts;

AND

■ In alternating directions until reaching the top of the scaffold.

• Attach bracing to the runners as close to the post as possible, if bracing can't be attached to the post.

• Make sure bearers meet all of the following:

– Are installed transversely between posts;

– If the bearer is coupled to the post, have the inboard coupler bear directly on the runner coupler;

– If the bearer is coupled to the runners, have the couplers as close to the posts as possible;

– Extend bearers beyond the posts and runners;

– Provide full contact with the coupler;

– The bottom bearers are located as close to the base as possible.

• Make sure runners meet all of the following:

– Are installed along the length of the scaffold;

– Are located on both the inside and outside posts at the same height;

– Are interlocked on straight runs to form continuous lengths and are coupled to each post;

– The bottom runners are located as close to the base as possible.

Note: Tube and coupler guardrails and midrails installed on outside posts can be used in lieu of outside runners.

You must:

• Make sure couplers are made of a structural metal, such as drop-forged steel, malleable iron, or structural grade aluminum.

• Prohibit using couplers made of gray cast iron.

Bracing – Tube and Coupler Scaffold

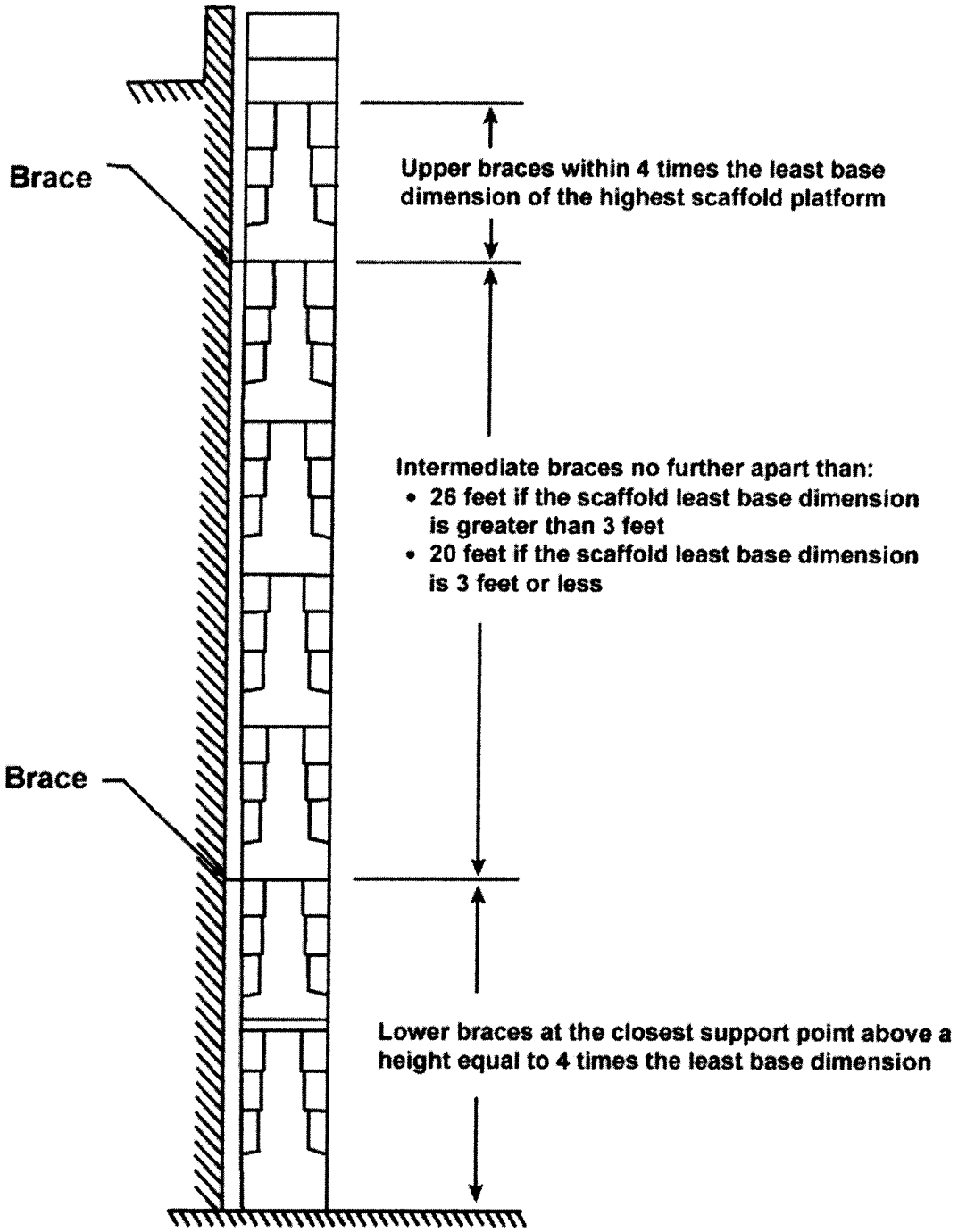

[Statutory Authority: RCW 49.17.010, 49.17.040, 49.17.050, 49.17.060. 05-01-054, § 296-874-40040, filed 12/7/04, effective 3/1/05.]

WAC 296-874-40042 Meet these requirements when using window jack scaffolds.

You must:

• Make sure window jack scaffolds meet all of the following:

– Are securely attached to the window opening;

– Are used for working only at the window opening the jack is placed through;

– Are not used:

■ To support planks placed between one window jack and another;

OR

■ As any other element of scaffolding.

[Statutory Authority: RCW 49.17.010, 49.17.040, 49.17.050, 49.17.060. 05-01-054, § 296-874-40042, filed 12/7/04, effective 3/1/05.]

WAC 296-874-500 Definitions.

Adjustable suspension scaffold a suspended scaffold equipped with one or more hoists that can be operated by employees on the scaffold.

Bearer a horizontal scaffold member (which may be supported by ledgers or runners) upon which the scaffold platform rests and which joins scaffold uprights, posts, poles, and similar members.

Boatswain's chair a single-point adjustable suspended scaffold consisting of a seat or sling designed to support one employee in a sitting position.

Brace a rigid connection that holds one scaffold member in a fixed position with respect to another member, or to a building or structure.

Bricklayers' square scaffold a supported scaffold composed of framed squares which support a platform.

Carpenters' bracket scaffold a supported scaffold consisting of a platform supported by brackets attached to building or structural walls.

Catenary scaffold a suspended scaffold consisting of a platform supported by two essentially horizontal and parallel ropes attached to structural members of a building or other structure. Additional support may be provided by vertical pickups.

Cleat a structural block used at the end of a platform to prevent the platform from slipping off its supports. Cleats are also used to provide footing on sloped surfaces such as access ramps.

Competent person someone who:

• Is capable of identifying existing and predictable hazards in the surroundings or working conditions which are unsanitary, hazardous, or dangerous to employees;

AND

• Has the authority to take prompt corrective measures to eliminate them.

Coupler a device for locking together the tubes of a tube and coupler scaffold.

Crawling board (chicken ladder) a supported scaffold consisting of a plank with cleats spaced and secured to provide footing, for use on sloped surfaces such as roofs.

Double-pole (independent pole) scaffold a supported scaffold consisting of one or more platforms resting on cross beams (bearers) supported by ledgers and a double row of uprights independent of support (except ties, guys, braces) from any structure.

Equivalent alternative design, material or method to protect against a hazard. You have to demonstrate it provides an equal or greater degree of safety for employees than the method, material or design specified in the rule.

Exposed power lines electrical power lines which are accessible to and may be contacted by employees. Such lines do not include extension cords or power tool cords.

Eye or eye splice a loop at the end of a wire rope.

Fabricated frame scaffold (tubular welded frame scaffold) a scaffold consisting of platforms supported on fabricated frames with integral posts, horizontal bearers, and intermediate members.

Failure load refusal, breaking, or separation of component parts. Load refusal is the point where the ultimate strength is exceeded.

Float (ship) scaffold a suspended scaffold consisting of a braced platform resting on two parallel bearers and hung from overhead supports by ropes of fixed length.

Form scaffold a supported scaffold consisting of a platform supported by brackets attached to formwork.

Guardrail system a vertical barrier, consisting of, but not limited to, toprails, midrails, and posts, erected to prevent employees from falling off a scaffold platform or walkway.

Handrails (ladder stands) a rail connected to a ladder stand running parallel to the slope and/or top step.

Hoist a manual or power-operated mechanical device to raise or lower a suspended scaffold.

Horse scaffold a supported scaffold consisting of a platform supported by construction horses (saw horses). Horse scaffolds constructed of metal are sometimes known as trestle scaffolds.

Independent pole scaffold (see double pole scaffold).

Interior hung scaffold a suspended scaffold consisting of a platform suspended from the ceiling or roof structure by fixed length supports.

Ladder jack scaffold a supported scaffold consisting of a platform resting on brackets attached to ladders.

Ladder stand a mobile, fixed-size, self-supporting ladder consisting of a wide flat tread ladder in the form of stairs.

Landing a platform at the end of a flight of stairs.

Large area scaffold a pole scaffold, tube and coupler scaffold, system scaffold, or fabricated frame scaffold erected over substantially the entire work area. For example: A scaffold erected over the entire floor area of a room.

Lean-to scaffold a supported scaffold which is kept erect by tilting it toward and resting it against a building or structure.

Ledger (see runner).

Lifeline a component consisting of a flexible line that connects to an anchorage at one end to hang vertically (vertical lifeline), or that connects to anchorages at both ends to stretch horizontally (horizontal lifeline). It serves as a means for connecting other components of a personal fall arrest system to the anchorage.

Lower levels areas below the level where the employee is located and to which an employee can fall. Such areas include, but are not limited to, ground levels, floors, roofs, ramps, runways, excavations, pits, tanks, materials, water, and equipment.

Masons' adjustable supported scaffold (see self-contained adjustable scaffold).

Masons' multipoint adjustable suspension scaffold a continuous run suspended scaffold designed and used for masonry operations.

Maximum intended load the total load of all persons, equipment, tools, materials, transmitted loads, and other loads reasonably anticipated to be applied to a scaffold or scaffold component at any one time.

Midrail a rail, approximately midway between the toprail of a guardrail system and the platform, and secured to the uprights erected along the exposed sides and ends of a platform.

Mobile scaffold supported scaffold mounted on casters or wheels.

Multilevel suspended scaffold a two-point or multipoint adjustable suspension scaffold with a series of platforms at various levels resting on common stirrups.

Multipoint adjustable suspension scaffold a suspended scaffold consisting of a platform(s) which is suspended by more than two ropes from overhead supports and equipped with means to raise and lower the platform to desired work levels.

Needle beam scaffold a suspended scaffold which has a platform supported by two bearers (needle beams) suspended from overhead supports.

Outrigger a structural member of a supported scaffold which increases the base width of a scaffold. This provides support for and increases the stability of the scaffold.

Outrigger beam (suspended and supported) the structural member of a suspended scaffold or outrigger scaffold which provides support for the scaffold by extending the scaffold point of attachment to a point out and away from the structure or building.

Outrigger scaffold a supported scaffold consisting of a platform resting on outrigger beams which projects beyond the wall or face of the building or structure. The inboard ends of the outrigger beams are secured inside the building or structure.

Overhand bricklaying the process of laying bricks and masonry so that the surface of the wall is on the opposite side of the wall from the mason, requiring the mason to lean over the wall to complete the work. It includes mason tending and electrical installation incorporated into the brick wall during the overhand bricklaying process.

Personal fall arrest system a system used to arrest an employee's fall. It consists of an anchorage, connectors, and body harness and may also include a lanyard, deceleration device, lifeline, or combinations of these.

Platform a work surface used in scaffolds, elevated above lower levels. Platforms can be constructed using individual wood planks, fabricated planks, fabricated decks, and fabricated platforms.

Pole scaffold (see single-pole scaffold and double (independent) pole scaffold).

Pump jack scaffold a supported scaffold consisting of a platform supported by vertical poles and movable support brackets.

Qualified person a person who has successfully demonstrated the ability to solve problems relating to the subject matter, work, or project, either by:

• Possession of a recognized degree, certificate, or professional standing;

OR

• Extensive knowledge, training and experience.

Rated load the manufacturer's specified maximum load to be lifted by a hoist or to be applied to a scaffold or scaffold component.

Repair bracket scaffold a supported scaffold consisting of a platform supported by brackets. The brackets are secured in place around the circumference or perimeter of a chimney, stack, tank or other supporting structure by one or more wire ropes placed around the supporting structure.

Roof bracket scaffold a supported scaffold used on a sloped roof. It consists of a platform resting on angular-shaped supports so that the scaffold platform is level.

Runner (ledger) the lengthwise horizontal spacing or bracing member which may support the bearers.

Scaffold a temporary elevated platform, including its supporting structure and anchorage points, used for supporting employees or materials.

Self-contained adjustable scaffold a combination supported and suspended scaffold consisting of an adjustable platform mounted on an independent supporting frame, not a part of the object being worked on, which is equipped with a means to raise and lower the platform. Such systems include rolling roof rigs, rolling outrigger systems, and some masons' adjustable supported scaffolds.

Shore scaffold a supported scaffold which is placed against a building or structure and held in place with props.

Single-point adjustable suspension scaffold a suspended scaffold consisting of a platform suspended by one rope from an overhead support and equipped with means to permit the movement of the platform to desired work levels.

Single-pole scaffold a supported scaffold consisting of platforms resting on bearers, the outside ends of which are supported on runners secured to a single row of posts or uprights, and the inner ends of which are supported on or in a structure or building wall.

Stair tower (scaffold stairway/tower) a tower comprised of scaffold components which contains internal stairway units and rest platforms. These towers are used to provide access to scaffold platforms and other elevated points such as floors and roofs.

Stall load the load at which the prime mover of a power-operated hoist stalls or the power to the prime mover is automatically disconnected.

Step, platform, and trestle ladder scaffold a platform resting directly on the rungs of a step, platform, or trestle ladder.

Stilts a pair of poles or similar supports with raised footrests, used to permit walking above the ground or working surface.

Stonesetters' multipoint adjustable suspension scaffold a continuous run suspended scaffold designed and used for stonesetters' operations.

Supported scaffold one or more platforms supported by rigid means such as outrigger beams, brackets, poles, legs, uprights, posts, or frames.

Suspended scaffold one or more platforms suspended from an overhead structure by ropes or other nonrigid means.

System scaffold a scaffold consisting of posts with fixed connection points that accept runners, bearers, and diagonals that can be interconnected at predetermined levels.

Toeboard (scaffold) a barrier erected along the exposed sides and ends of a scaffold platform at platform level to prevent material, tools, and other loose objects from falling from the platform.

Top plate bracket scaffold a scaffold supported by brackets that hook over or are attached to the top of a wall. This type of scaffold is similar to carpenters' bracket scaffolds and form scaffolds.

Tube and coupler scaffold a scaffold consisting of platforms supported by tubing, erected with coupling devices connecting uprights, braces, bearers, and runners.

Tubular welded frame scaffold (see fabricated frame scaffold).

Tubular welded sectional folding scaffold a sectional, folding metal scaffold either of ladder frame or inside stairway design. It is substantially built of prefabricated welded sections, which consist of end frames, platform frame, inside inclined stairway frame and braces, or hinged connected diagonal and horizontal braces. It can be folded into a flat package when the scaffold is not in use.

Two-point suspension scaffold (swing stage) a suspended scaffold consisting of a platform supported by hangers (stirrups), suspended by two ropes from overhead supports, and equipped with a means to permit the raising and lowering of the platform to desired work levels.

Unstable objects items whose strength, configuration, or lack of stability may allow them to become dislocated and shift and therefore may not properly support the loads imposed on them. Unstable objects do not constitute a safe base support for scaffolds, platforms, or employees. Examples include, but are not limited to, barrels, boxes, loose brick, and concrete blocks.

Vertical pickup a rope used to support the horizontal rope in a catenary scaffold.

Walkway (scaffold) part of a scaffold used only for access and not as a working level.

Window jack scaffold a platform resting on a bracket or jack that projects through a window opening.

Work level the elevated platform, used for supporting workers and their materials.

[Statutory Authority: RCW 49.17.010, 49.17.040, 49.17.050, 49.17.060. 05-01-054, § 296-874-500, filed 12/7/04, effective 3/1/05.]

Chapter 296-878 WAC

SAFETY STANDARDS FOR WINDOW CLEANING

WAC

296-878-100	Scope.
296-878-10005	Summary.
296-878-110	Training.
296-878-11005	Train workers to use window-cleaning equipment.
296-878-120	Building surfaces and fixtures.
296-878-12005	Make sure building surfaces and fixtures are safe to use.
296-878-130	Inspection procedures.
296-878-13005	Inspect the area to be cleaned.
296-878-13010	Inspect window-cleaning equipment before use.
296-878-140	Develop site-specific service and emergency plans.
296-878-14005	Develop a site-specific service and emergency recovery plan for window-cleaning operations.
296-878-150	Equipment.
296-878-15005	Select and use appropriate equipment.
296-878-15015	Select appropriate rope for suspended equipment.
296-878-15020	Select appropriate carabiners.
296-878-15025	Use fall protection equipment.
296-878-160	Warning signs and barricades.
296-878-16005	Provide warning signs and barricades when suspended equipment is used.
296-878-170	Power line clearances.
296-878-17005	Maintain clearance between window cleaners and power lines.
296-878-180	Window-cleaners' belts and anchors.
296-878-18005	Select appropriate window-cleaners' belts and anchors.
296-878-18010	Inspect the anchors you plan to use for window cleaning.
296-878-18015	Use window-cleaners' belts safely.
296-878-18020	Move safely on the outside of buildings.
296-878-190	Boatswains' chairs.
296-878-19005	Select appropriate boatswains' chairs.
296-878-19010	Safely use boatswains' chairs rigged with a block and tackle.
296-878-200	Rope descent systems.
296-878-20005	Select appropriate rope descent systems.
296-878-20010	Safely use rope descent systems.
296-878-20015	Safely use rope descent devices.
296-878-210	Equipment prohibited.
296-878-21005	Prohibit equipment from use.
296-878-220	Definitions.

WAC 296-878-100 Scope. These rules apply to all window-cleaning activities performed on the inside or outside of a building in which the window cleaner is working from a level that is located more than forty-eight inches above grade.

[Statutory Authority: RCW 49.17.010, 49.17.040, 49.17.050, and 49.17.060. 02-22-027, § 296-878-100, filed 10/28/02, effective 1/1/03.]

WAC 296-878-10005 Summary.

Your responsibility:

Make sure workers clean windows safely, and properly use and maintain their window-cleaning equipment.

IMPORTANT:

Window-cleaning equipment includes window-cleaner's belts, boatswains' chairs, rope descent systems, ladders, supported scaffolds and the support equipment used to suspend employees cleaning windows.

You must:

Training

Train workers to use window-cleaning equipment

WAC 296-878-11005

Building surfaces and fixtures

Make sure building surfaces and fixtures are safe to use

WAC 296-878-12005

Inspection procedures

Inspect the area to be cleaned

WAC 296-878-13005

Inspect window-cleaning equipment before use

WAC 296-878-13010

Develop site-specific service and emergency plans

Develop a site-specific service and emergency recovery plan for window-cleaning operations

WAC 296-878-14005

Equipment

Select and use appropriate equipment

WAC 296-878-15005

Other window-cleaning equipment

WAC 296-878-15010

Select appropriate rope for suspended equipment

WAC 296-878-15015

Select appropriate carabiners

WAC 296-878-15020

Use fall protection equipment

WAC 296-878-15025

Warning signs and barricades

Provide warning signs and barricades when suspended equipment is used

WAC 296-878-16005

Power line clearances

Maintain clearance between window cleaners and power lines

WAC 296-878-17005

Window-cleaners' belts and anchors

Select appropriate window-cleaners' belts and anchors

WAC 296-878-18005

Inspect the anchors you plan to use for window cleaning

WAC 296-878-18010

Use window-cleaners' belts safely

WAC 296-878-18015

Move safely on the outside of buildings

WAC 296-878-18020

Boatswains' chairs

Select appropriate boatswains' chairs

WAC 296-878-19005

Safely use boatswains' chairs rigged with a block and tackle

WAC 296-878-19010

Rope descent systems

Select appropriate rope descent systems

WAC 296-878-20005

Safely use rope descent systems

WAC 296-878-20010

Safely use rope descent devices

WAC 296-878-20015

Equipment prohibited

Prohibit equipment from use

WAC 296-878-21005

Definitions

WAC 296-878-220.

[Statutory Authority: RCW 49.17.010, 49.17.040, 49.17.050, and 49.17.060. 02-22-027, § 296-878-10005, filed 10/28/02, effective 1/1/03.]

WAC 296-878-110 Training.

[Statutory Authority: RCW 49.17.010, 49.17.040, 49.17.050, and 49.17.060. 02-22-027, § 296-878-110, filed 10/28/02, effective 1/1/03.]

WAC 296-878-11005 Train workers to use window-cleaning equipment.

You must:

• Provide the following training to workers before they use window-cleaning equipment on the job:

– Proper care and maintenance of the equipment

– Review manufacturer's instructions for proper equipment use

– Methods for inspection, assembly, and dismantling of components

– Identify anchorages

– A complete understanding of safe working conditions

– How employees will be rescued.

• Provide additional training to workers using window-cleaners' belts in all the following areas:

– How to select the proper-sized belt

– How to use anchors and terminals

– How to deal with obstructions and slippery/wet surfaces.

• Provide additional training to workers using boatswains' chairs and rope descent systems in all the following areas:

– Proper rigging practices

– Fall arrest requirements

– Proper methods of descending

– The effects of wind on window-cleaning operations when a worker is suspended

– Proper methods of hoisting for ascents.

• Document the training by recording all of the following:

– The name and signature of the trainer/educator

– The name and signature of the student

– The subjects in which the workers were trained

– The date of the training

– The location of the training.

Note: • You do not need a specialized educator to provide training. You may use a qualified person to conduct the training. A qualified person is defined as a person who has:

– Extensive knowledge, training, and experience about the subject matter, work, or project

– A recognized degree, certificate, or professional standing

– Successful demonstration of problem solving skills in connection with the subject, work, or project.

[Statutory Authority: RCW 49.17.010, 49.17.040, 49.17.050, and 49.17.060. 02-22-027, § 296-878-11005, filed 10/28/02, effective 1/1/03.]

WAC 296-878-120 Building surfaces and fixtures.

[Statutory Authority: RCW 49.17.010, 49.17.040, 49.17.050, and 49.17.060. 02-22-027, § 296-878-120, filed 10/28/02, effective 1/1/03.]

WAC 296-878-12005 Make sure building surfaces and fixtures are safe to use.

You must:

• Make sure building surfaces and fixtures are safe to be used before you begin the window-cleaning operation. This includes:

– Guardrails, parapets, cornices and other building surfaces used to support suspended loads

– Permanently installed fixtures used as anchorages and tiebacks

– Window-cleaning equipment support systems permanently dedicated to the building.

[Statutory Authority: RCW 49.17.010, 49.17.040, 49.17.050, and 49.17.060. 02-22-027, § 296-878-12005, filed 10/28/02, effective 1/1/03.]

WAC 296-878-130 Inspection procedures.

[Statutory Authority: RCW 49.17.010, 49.17.040, 49.17.050, and 49.17.060. 02-22-027, § 296-878-130, filed 10/28/02, effective 1/1/03.]

WAC 296-878-13005 Inspect the area to be cleaned.

You must:

• Inspect the building before cleaning to make sure there are no areas that can damage worker fall protection equipment and window-cleaning equipment. Inspect:

– Sharp edges of parapets

– Window frames

– Open projected windows

– Cornices

– Overhangs

– Any other areas that may abrade, sever, weaken, or damage the equipment.

• Make sure all working surfaces are safe and free from hazards such as:

– Grease

– Oil

– Other slippery substances.

[Statutory Authority: RCW 49.17.010, 49.17.040, 49.17.050, and 49.17.060. 02-22-027, § 296-878-13005, filed 10/28/02, effective 1/1/03.]

WAC 296-878-13010 Inspect window-cleaning equipment before use.

You must:

(1) Store your window-cleaning equipment in a way that:

• Is easy to get to, inspect, and safely take out for use

• Provides protection from moisture, sunlight, or corrosion.

(2) Make sure a competent person inspects these items before each use:

• Window-cleaners' belts

• Boatswains' chairs

• All components of rope descent systems

• Suspension devices

• Certified roof anchorages

• Primary support ropes or lines

• The descent device

• Carabiners or shackles

• A seatboard or boatswain's chair

• Wear points on rope descent system components exposed to constant friction.

(3) Make sure you do not use any piece of window-cleaning equipment with defects.

• Prohibit makeshift repairs to any piece of window-cleaning equipment

• Label any piece of window-cleaning equipment that is defective "dangerous, do not use."

(4) Secure any padding or softeners so they do not come loose from:

• The surface of the building

• The rope if not attached to the building.

[Statutory Authority: RCW 49.17.010, 49.17.040, 49.17.050, and 49.17.060. 02-22-027, § 296-878-13010, filed 10/28/02, effective 1/1/03.]

WAC 296-878-140 Develop site-specific service and emergency plans.

[Statutory Authority: RCW 49.17.010, 49.17.040, 49.17.050, and 49.17.060. 02-22-027, § 296-878-140, filed 10/28/02, effective 1/1/03.]

WAC 296-878-14005 Develop a site-specific service and emergency recovery plan for window-cleaning operations.

You must:

• Make sure that a qualified person develops a written plan for each location to be cleaned that identifies:

– Hazardous areas

– Drop zones

– Safety features

– Methods for emergency recovery of workers working from suspended equipment, or other types of installations, in the event of equipment failure or any other kind of disability.

• Keep the plan at the work site during the entire cleaning operation.

Note: You may use an outside service for rescue and recovery (such as a fire department) if:

- The rescue personnel will be able to reach the victims without undue delay
- They have the necessary equipment to retrieve the victims
- They are trained and proficient in high angle rescue techniques.

[Statutory Authority: RCW 49.17.010, 49.17.040, 49.17.050, and 49.17.060. 02-22-027, § 296-878-14005, filed 10/28/02, effective 1/1/03.]

WAC 296-878-150 Equipment.

[Statutory Authority: RCW 49.17.010, 49.17.040, 49.17.050, and 49.17.060. 02-22-027, § 296-878-150, filed 10/28/02, effective 1/1/03.]

WAC 296-878-15005 Select and use appropriate equipment.

You must:

(1) Make sure that all equipment provided to workers for window-cleaning operations is engineered, designed, and intended for use in commercial applications.

Note: Equipment that is designed or labeled for recreational use or rescue use only is prohibited for use in window-cleaning operations.

You must:

(2) Make sure that the window-cleaning equipment is not altered unless it is specifically approved in writing by the original manufacturer or a registered professional engineer.

(3) Provide manufacturer's instructions to employees for all window-cleaning equipment they will use.

Reference: Use Table 1 for other window-cleaning equipment requirements.

Table 1
Other window-cleaning equipment

	If you use:	Then follow all requirements in:
1.	Portable ladders	WAC 296-800-290, Portable ladders
2.	Supported scaffolds	Chapter 296-24 WAC, PART J-2, Scaffolds
3.	Suspension ropes and lifelines Powered and manual hoists Suspended scaffold equipment	Chapter 296-24 WAC, PART J-2, Scaffolds
4.	Single and multipoint adjustable suspension scaffolds	Chapter 296-24 WAC, PART J-2, Scaffolds
5.	Powered platforms	Chapter 296-24 WAC, PART J-3, Powered platforms

[Statutory Authority: RCW 49.17.010, 49.17.040, 49.17.050, and 49.17.060. 02-22-027, § 296-878-15005, filed 10/28/02, effective 1/1/03.]

WAC 296-878-15015 Select appropriate rope for suspended equipment.

You must:

• Make sure all rope used for suspended equipment has a minimum breaking strength of five thousand pounds.

[Statutory Authority: RCW 49.17.010, 49.17.040, 49.17.050, and 49.17.060. 02-22-027, § 296-878-15015, filed 10/28/02, effective 1/1/03.]

WAC 296-878-15020 Select appropriate carabiners.

You must:

• Use carabiners for connecting hardware or attaching boatswains' chairs, descent devices, and lifelines to anchors.

• Use carabiners with a minimum tensile load of five thousand pounds.

• Make sure carabiners are either manual or auto-locking.

Note: You may secure a rope to an anchor with a knot if normal daily use of the rope will not decrease its initial breaking strength below five thousand pounds.

[Statutory Authority: RCW 49.17.010, 49.17.040, 49.17.050, and 49.17.060. 02-22-027, § 296-878-15020, filed 10/28/02, effective 1/1/03.]

WAC 296-878-15025 Use fall protection equipment.

You must:

(1) Make sure the fall arrest system meets the requirements of WAC 296-24-88050 mandatory Appendix C, Part I, Personal fall arrest systems.

• Use and inspect fall arrest equipment in accordance with the requirements of WAC 296-24-88050, mandatory Appendix C, Part I, Personal fall arrest systems.

• Make sure all workers suspended from a boatswain's chair or rope descent system use an independent fall arrest system where the fall arrest anchorage is separate from the suspension system anchorage.

• Make sure workers operating powered platforms wear and use a fall arrest system.

• Make sure workers assemble and wear their personal fall arrest equipment before they approach the point of suspension.

• Make sure workers are connected at all times to the fall arrest system while they are suspended.

(2) Make sure the boatswain's chair or rope descent system is connected at all times to the suspension line.

[Statutory Authority: RCW 49.17.010, 49.17.040, 49.17.050, and 49.17.060. 02-22-027, § 296-878-15025, filed 10/28/02, effective 1/1/03.]

WAC 296-878-160 Warning signs and barricades.

[Statutory Authority: RCW 49.17.010, 49.17.040, 49.17.050, and 49.17.060. 02-22-027, § 296-878-160, filed 10/28/02, effective 1/1/03.]

WAC 296-878-16005 Provide warning signs and barricades when suspended equipment is used.

You must:

(1) Place warning signs below suspended equipment

(2) Block the ground area with barricades directly under or next to the work zone

(3) Assign a competent person to decide if additional protection is necessary

(4) Make sure all tools used by the worker are attached to the worker, seatboard, or boatswain's chair.

Reference: Rules for protecting workers from overhead hazards are listed in WAC 296-800-16055, Make sure your employees use appropriate head protection.

[Statutory Authority: RCW 49.17.010, 49.17.040, 49.17.050, and 49.17.060. 02-22-027, § 296-878-16005, filed 10/28/02, effective 1/1/03.]

WAC 296-878-170 Power line clearances.

[Statutory Authority: RCW 49.17.010, 49.17.040, 49.17.050, and 49.17.060. 02-22-027, § 296-878-170, filed 10/28/02, effective 1/1/03.]

WAC 296-878-17005 Maintain clearance between window cleaners and power lines.

You must:

• Maintain clearances between window cleaners and power lines as indicated in Tables 2 and 3.

Table 2
Minimum Clearances from Power Lines - Insulated Lines

Voltage	Minimum distance	Alternatives
Less than 300 volts	3 feet (0.9 m)	
300 volts to 50 kv	10 feet (3.1 m)	
More than 50 kv	10 feet (3.1 m) plus 0.4 inches (1.0 cm) for each 1 kv over 50 kv	2 times the length of the line insulator, but never less than 10 feet (3.1 m)

Table 3
Minimum Clearances from Power Lines - Uninsulated Lines

Voltage	Minimum distance	Alternatives
Less than 50 kv	10 feet (3.1 m)	
More than 50 kv	10 feet (3.1 m) plus 0.4 inches (1.0 cm) for each 1 kv over 50 kv	2 times the length of the line insulator, but never less than 10 feet (3.1 m)

You must:

• Follow these procedures when window cleaners need to get closer to power lines than allowed in Tables 2 and 3:

– Notify the utility company or electrical system operator of the need to work closer than the minimum clearances to power lines before starting the work

– Begin the work only when the utility company or electrical system operator has deenergized or relocated the lines, or installed protective coverings to prevent accidental contact with the lines.

[Statutory Authority: RCW 49.17.010, 49.17.040, 49.17.050, and 49.17.060. 02-22-027, § 296-878-17005, filed 10/28/02, effective 1/1/03.]

WAC 296-878-180 Window-cleaners' belts and anchors.

[Statutory Authority: RCW 49.17.010, 49.17.040, 49.17.050, and 49.17.060. 02-22-027, § 296-878-180, filed 10/28/02, effective 1/1/03.]

WAC 296-878-18005 Select appropriate window-cleaners' belts and anchors.

You must:

• Make sure window-cleaners' belts and anchors conform to the:

– Design, manufacture, and maintenance requirements of ANSI/IWCA 1-14.1-2001

AND

– Manufacturer's specifications.

[Statutory Authority: RCW 49.17.010, 49.17.040, 49.17.050, and 49.17.060. 02-22-027, § 296-878-18005, filed 10/28/02, effective 1/1/03.]

WAC 296-878-18010 Inspect the anchors you plan to use for window cleaning.

You must:

• Make sure you do not use anchors if they:

– Appear to be damaged

– Appear deteriorated

– Appear to be worn

– Appear to be loose

– Appear to be unsecured to the building or window frame

– Will not allow the belt terminal to easily slip over the anchor head.

• Use window-cleaner's belts only if:

– The area to be cleaned is safe

– All anchors intended for use are safe.

• Make sure window ledges and frames will not impair the safe use of the window-cleaner's belt.

Note: If unsafe anchors are found, report them to the building owner or manager and do not use them.

[Statutory Authority: RCW 49.17.010, 49.17.040, 49.17.050, and 49.17.060. 02-22-027, § 296-878-18010, filed 10/28/02, effective 1/1/03.]

WAC 296-878-18015 Use window-cleaners' belts safely.

You must:

• Make sure workers do not extend more than one arm beyond the window sash when cleaning windows from inside a building.

• Attach one belt terminal to an anchor before you put more than one arm outside the window.

• Pull on the terminal strap and look for signs of damage to the anchor.

• Attach both belt terminals to anchors before climbing out the window.

• Keep all belt terminals attached during the entire cleaning operation.

• Make sure the worker keeps one terminal attached to an anchor when reentering the window and until the worker is inside.

[Statutory Authority: RCW 49.17.010, 49.17.040, 49.17.050, and 49.17.060. 02-22-027, § 296-878-18015, filed 10/28/02, effective 1/1/03.]

WAC 296-878-18020 Move safely on the outside of buildings. You must:

• Make sure you travel on the outside of the building only when

– You keep at least one window-cleaner's belt terminal attached at all times

– The anchors are not more than forty-eight inches apart.

Note: Anchors can be up to seventy-two inches apart if

- The sill or ledge is continuous
- The sill or ledge is at least twelve inches wide
- The sill or ledge has a slope less than five degrees
- There is at least six inches of window sill in front of the mullions.

[Statutory Authority: RCW 49.17.010, 49.17.040, 49.17.050, and 49.17.060. 02-22-027, § 296-878-18020, filed 10/28/02, effective 1/1/03.]

WAC 296-878-190 Boatswains' chairs.

[Statutory Authority: RCW 49.17.010, 49.17.040, 49.17.050, and 49.17.060. 02-22-027, § 296-878-190, filed 10/28/02, effective 1/1/03.]

WAC 296-878-19005 Select appropriate boatswains' chairs.

You must:

(1) Make sure that when you use a block and tackle, it is the correct size, including:

• Correctly-sized ball bearings or bushed blocks

• Safety hooks

• Eye-spliced rope

• A minimum breaking strength of five thousand pounds.

(2) Make sure all rope used with a boatswain's chair has a minimum breaking strength of five thousand pounds, including rope used for:

• Suspension

• Block and tackle

• Seat slings.

(3) Make sure the ropes on boatswain's chair seat slings:

• Are reeved through the four corner holes in the seat

• Cross each other on the underside of the seat

• Are rigged so the chair cannot slip out of a level position.

[Statutory Authority: RCW 49.17.010, 49.17.040, 49.17.050, and 49.17.060. 02-22-027, § 296-878-19005, filed 10/28/02, effective 1/1/03.]

WAC 296-878-19010 Safely use boatswains' chairs rigged with a block and tackle.

You must:

(1) Make sure the rated capacity or the maximum intended load, whichever is less, is not exceeded.

(2) Make sure the suspension rope stays vertical between the boatswain's chair and suspension device unless all of these requirements are met:

• The rigging has been designed by a qualified person

• The scaffold can be easily reached by rescuers

• The suspension rope is protected from damage when a change in direction occurs

• The scaffold will not swing and contact another surface.

(3) Make sure a suspension height of seventy-five feet above grade or building setback is not exceeded.

Exemption: Suspension height may be up to one hundred thirty feet above grade or building setback if the boatswain's chair block and tackle has all of the following:

• An automatic braking system

• A design that minimizes the amount of force required to raise or lower the suspended worker

• An automatic braking system that automatically maintains an elevation when no force is applied to the tackle

• A system that does not slip.

You must:

(4) Prohibit tying any kind of knot in a block and tackle system to maintain elevation.

(5) Make sure another worker is stationed below any boatswain's chair rigged with a block and tackle who can assist the suspended employee.

(6) Make sure workers do not attempt to increase the work area by swinging, swaying, or other maneuvers.

[Statutory Authority: RCW 49.17.010, 49.17.040, 49.17.050, and 49.17.060. 02-22-027, § 296-878-19010, filed 10/28/02, effective 1/1/03.]

WAC 296-878-200 Rope descent systems.

[Statutory Authority: RCW 49.17.010, 49.17.040, 49.17.050, and 49.17.060. 02-22-027, § 296-878-200, filed 10/28/02, effective 1/1/03.]

WAC 296-878-20005 Select appropriate rope descent systems. You must:

• Make sure the rope descent system is designed, used, and maintained according to:

– ANSI/IWCA 1-14.1-2001

– The manufacturer's instructions.

• Make sure the rope descent system has been manufactured and is intended to be used for window cleaning.

Note: Equipment that is designed or labeled for recreational use or rescue use only is prohibited for use in window-cleaning operations.

You must:

• Make sure the rope descent system components are compatible and have a minimum tensile strength of five thousand pounds.

– This does not apply to the seatboard.

• Make sure the rope descent system has specific use instructions for each component.

[Statutory Authority: RCW 49.17.010, 49.17.040, 49.17.050, and 49.17.060. 02-22-027, § 296-878-20005, filed 10/28/02, effective 1/1/03.]

WAC 296-878-20010 Safely use rope descent systems.

You must:

(1) Make sure workers use extreme care when using rope descent equipment around electrical service, heat sources, and turbulent areas, such as air vents.

(2) Connect the seatboard or boatswain's chair to the descent device with a manual or auto locking carabiner.

(3) Make sure workers are positioned in the seatboard or boatswain's chair before being suspended.

(4) Make sure workers do not reach more than six feet in any direction as measured from a centerline straight down from where the suspension rope bears on the building.

(5) Make sure workers do not descend rapidly, swing excessively, or stop suddenly.

(6) Make sure that, in addition to the suspended worker, there is one other person at the jobsite who is skilled in using the rope descent system and rescue procedures.

(7) Make sure you do not exceed a three hundred-foot height of descent as measured from grade or building setback.

(8) Make sure your site-specific service plan addresses the following hazards for descents over one hundred thirty feet as measured from grade or building setback:

• Sudden weather changes, such as wind gusts, micro bursts, or tunneling wind currents

• Inability of the rope descent system to function without using excessive force

• Workers suspended for long periods of time

• Rerigging and movement of main suspension and safety lines.

(9) Stabilize workers suspended from a rope descent system whenever the descent is higher than one hundred thirty feet, as measured from grade or building setback.

(10) Prohibit workers from working when wind speed makes any stabilization equipment ineffective.

Note: Provisions for stabilizing workers may include:
- Continuous stabilization, such as mullion tracks
- Intermittent stabilization, such as detent pins/buttons
- Work station stabilization, such as suction cups.

[Statutory Authority: RCW 49.17.010, 49.17.040, 49.17.050, and 49.17.060. 02-22-027, § 296-878-20010, filed 10/28/02, effective 1/1/03.]

WAC 296-878-20015 Safely use rope descent devices. (1) Make sure the rated capacity or the maximum intended load, whichever is less, is not exceeded.

(2) Make sure the descent device manufacturer's specifications for rope diameter and construction are followed.

(3) Make sure the rope is rigged through the descent device for a controlled rate of descent.

(4) Make sure the attachment point on the descent device is one piece with no gates or openings.

(5) Make sure the descent device will remain stationary when positive action is taken.

[Statutory Authority: RCW 49.17.010, 49.17.040, 49.17.050, and 49.17.060. 02-22-027, § 296-878-20015, filed 10/28/02, effective 1/1/03.]

WAC 296-878-210 Equipment prohibited.

[Statutory Authority: RCW 49.17.010, 49.17.040, 49.17.050, and 49.17.060. 02-22-027, § 296-878-210, filed 10/28/02, effective 1/1/03.]

WAC 296-878-21005 Prohibit equipment from use.

You must:

• Prohibit use of the following equipment for window-cleaning operations:

– Portable sills

– Window jacks

– Capstan devices to suspend workers

– Suspension or fall-arrest ropes that are made entirely of polypropylene.

[Statutory Authority: RCW 49.17.010, 49.17.040, 49.17.050, and 49.17.060. 02-22-027, § 296-878-21005, filed 10/28/02, effective 1/1/03.]

WAC 296-878-220 Definitions.

Anchor, window-cleaner's belt - Fall-preventing attachment points for direct attachment of the terminal portion of a window-cleaner's belt.

Belt terminal - That part of the safety belt that is attached to the anchor during the window-cleaning operation.

Block and tackle - A lifting device consisting of one or more pulley blocks reeved with chains, wire ropes, or fibre ropes used solely for raising and lowering a load or moving a load horizontally.

Boatswain's chair - A single-point adjustable suspension scaffold consisting of a seat or sling designed to support one worker in a sitting position.

Capstan device - An upright, spool-shaped cylinder used for hoisting or lifting weights that is turned by a motor or by hand.

Carabiner - An oblong metal ring with an openable spring-hinged side, used to clip a rope to an anchoring device.

Competent person - One who is capable of identifying existing and predictable hazards in the surroundings, or working conditions which are unsanitary, hazardous, or dangerous to employees, and who has authorization to take prompt corrective measures to eliminate them.

Drop (drop zone) - A vertical area or work zone accessed by the worker or piece of equipment during one descent.

Drop line - A vertical line from a fixed anchorage, independent of the work surface.

Fixture - Attachments, anchors, anchorages, tie backs or support equipment permanently dedicated to a given site.

Grade - Means the ground, floor, sidewalk, roof, or any level surface that is considered a safe place to work.

Lanyard - A flexible line to secure a wearer of a safety belt or harness to a drop line, lifeline or fixed anchorage.

Mullion - A slender, vertical dividing bar between windows, panels, etc.

Primary support/suspension - A working line or approved anchorage used for attachment of a working line.

Qualified person - A person is qualified if they have one of the following:

• Extensive knowledge, training, and experience about the subject matter, work, or project

• A recognized degree, certificate, or professional standing

• Successful demonstration of problem solving skills in connection with the subject, work, or project.

Rated capacity - The combined weight of workers, tools, equipment, and other materials that the device is designed and installed to lift and support.

Rope descent system (RDS) - An assembly of components that allows the operator to control the rate of descent at any time. A rope descent system includes the following components:

• Suspension devices
• Certified roof anchorages
• Primary support ropes or lines
• The descent device
• Carabiners or shackles
• A seatboard or boatswain's chair.

Terminal strap - The strap or rope attached to the waist band on one end, and to the belt terminals on the other end.

Window cleaning - Cleaning, wiping, restoring or other methods of cleaning windows.

Working line - A rope suspended from an anchorage and used to access parts of a building.

[Statutory Authority: RCW 49.17.010, 49.17.040, 49.17.050, and 49.17.060. 02-22-027, § 296-878-220, filed 10/28/02, effective 1/1/03.]