Chapter 296-24 WAC
GENERAL SAFETY AND HEALTH STANDARDS

WAC

PART A-1
PURPOSE AND SCOPE

296-24-003 Subsections, subdivisions, items, subitems, and segments.
296-24-005 Purpose and scope.
296-24-012 Definitions applicable to all sections of this chapter.

PART A-2
PERSONAL PROTECTIVE EQUIPMENT
RESERVE
Note: Personal protective equipment requirements have been moved to WAC 296-800-160.
Note: Electrical protective equipment requirements have been moved to WAC 296-24-980.

PART A-3
LATE NIGHT RETAIL WORKER CRIME PROTECTION
Note: Late night retail worker crime protection has been moved to chapter 296-832 WAC.

PART A-4
SAFETY PROCEDURES
Note: Safety procedures have been moved to chapter 296-803 WAC.

PART B-2
SAFETY COLOR CODE FOR MARKING PHYSICAL HAZARDS, ETC., WINDOW WASHING
Note: Safety color code for marking physical hazards, etc., window washing have been moved to WAC 296-800-11045.

PART C
MACHINERY AND MACHINE GUARDING
Note: Machinery and machine guarding has been moved to chapter 296-806 WAC.

PART D
MATERIALS HANDLING AND STORAGE, INCLUDING CRANES, DERRICKS, ETC., AND RIGGING

Handling and Storage—Cranes, Derricks, Etc.

296-24-215 Materials handling and storage—Handling materials—General.
296-24-21501 Use of mechanical equipment.
296-24-21509 Clearance limits.
296-24-21511 Rolling railroad cars.
296-24-21513 Guarding.
296-24-235 Overhead and gantry cranes.
296-24-23501 Definitions.
296-24-23503 General requirements.
296-24-23505 Cabs.
296-24-23507 Footwalks and ladders.
296-24-23509 Stops, bumpers, rail sweeps, and guards.
296-24-23511 Brakes.
296-24-23513 Electric equipment.
296-24-23515 Hoisting equipment.
296-24-23517 Warning device.
296-24-23519 Inspection.
296-24-23521 Testing.
296-24-23523 Maintenance.
296-24-23525 Rope inspection.
296-24-23527 Handling the load.
296-24-23529 Operators.
296-24-23531 Other requirements—General.
296-24-23533 Crane and derrick suspended personnel (work) platforms.
296-24-237 Construction, operation and maintenance—Chain and electric hoists.
296-24-238 Air hoists.
296-24-240 Crawler locomotive and truck cranes.
296-24-24001 Definitions.
296-24-24003 General requirements.
296-24-24005 Load ratings.
296-24-24007 Inspection classification.
296-24-24009 Testing.
296-24-24011 Maintenance procedure.
296-24-24013 Rope inspection.
296-24-24015 Handling the load.
296-24-24017 Other requirements.
296-24-24019 Operating near overhead electric power lines.
296-24-245 Derricks.
296-24-24501 Definitions.
296-24-24503 General requirements.
296-24-24505 Load ratings.
296-24-24507 Inspection.
296-24-24509 Testing.
296-24-24511 Maintenance.
296-24-24513 Rope inspection.
296-24-24515 Operations of derricks.
296-24-24517 Handling the load.
296-24-24519 Other requirements.
296-24-293 "A" frames.
296-24-294 Rigging.
296-24-29401 Wire rope.
296-24-29403 Hemp rope.
296-24-29405 Hemp and wire rope slings.
296-24-29407 Guys.
296-24-29409 Thimbles.
296-24-29411 Blocks and falls.
296-24-29413 Chains and cables.
296-24-29415 Slings.
296-24-29417 Definitions.
296-24-29419 Safe operating practices.
296-24-29421 Inspections.
296-24-29423 Alloy steel chain slings.
296-24-29425 Wire rope slings.
296-24-29427 Metal mesh slings.
296-24-29429 Natural and synthetic fiber rope slings.
296-24-29431 Synthetic web slings.

PART E
HAZARDOUS MATERIALS, FLAMMABLE AND COMBUSTIBLE LIQUIDS, SPRAY FINISHING

Hazardous Materials

296-24-295 Compressed gases (general requirements).
296-24-29501 Inspection of compressed gas cylinders.
296-24-29503 Compressed gases.
296-24-29505 Safety relief devices for compressed gas containers.
296-24-310 Acetylene.
296-24-31001 Cylinders.
296-24-31003 Piped systems.
296-24-31005 Generators and filling cylinders.
296-24-315 Hydrogen.
296-24-31501 General.
296-24-31503 Gaseous hydrogen systems.
296-24-31505 Liquefied hydrogen systems.
296-24-320 Oxygen.
296-24-32001 Scope.
296-24-32003 Bulk oxygen systems.
296-24-325 Nitrous oxide.
296-24-330 Flammable and combustible liquids.
296-24-33001 Definitions.
296-24-33003 Scope.
296-24-33005 Tank storage.
296-24-33007 Piping, valves, and fittings.
296-24-33009 Container and portable tank storage.
296-24-33011 Industrial plants.
296-24-33013 Bulk plants.
296-24-33015 Service stations.
296-24-33017 Processing plants.
296-24-33019 Refineries, chemical plants, and distilleries.
296-24-370 Spray finishing using flammable and combustible materials.
296-24-37001 Definitions.
296-24-37003 Spray booths.
296-24-37005 Electrical and other sources of ignition.
296-24-37007 Ventilation.

296-24-37009 Flammable and combustible liquids—Storage and handling.
296-24-37011 Protection.
296-24-37013 Operations and maintenance.
296-24-37015 Fixed electrostatic apparatus.
296-24-37017 Electrostatic hand spraying equipment.
296-24-37019 Drying, curing, or fusion apparatus.
296-24-37021 Automobile undercoating in garages.
296-24-37023 Powder coating.
296-24-37025 Organic peroxides and dual component coatings.
296-24-37027 Scope.
296-24-450 Chlorine cylinders used in chlorinator systems.

PART F-1
STORAGE AND HANDLING OF LIQUEFIED PETROLEUM GASES

296-24-475 Storage and handling of liquefied petroleum gases.
296-24-47501 Definitions.
296-24-47503 Scope.
296-24-47505 Basic rules.
296-24-47507 Cylinder systems.
296-24-47509 Systems utilizing containers other than DOT containers.
296-24-47511 Liquefied petroleum gas as a motor fuel.
296-24-47513 Storage of containers awaiting use or resale.
296-24-47517 Liquefied petroleum gas service stations.

PART F-2
STORAGE AND HANDLING OF ANHYDROUS AMMONIA
Note: Storage and handling of anhydrous ammonia has been moved to chapter 296-826 WAC.

PART G-1
MEANS OF EGRESS

296-24-55001 Definitions.
296-24-56525 Automatic sprinkler systems.
296-24-56527 Fire alarm signaling systems.
296-24-567 Employee emergency plans and fire prevention plans.
296-24-56701 Appendix.

PART G-2
FIRE PROTECTION

296-24-585 Fire protection.
296-24-58501 Definitions applicable to fire protection.
296-24-58503 Scope, application and definitions applicable.

PART G-3
FIRE SUPPRESSION EQUIPMENT

296-24-592 Portable fire extinguishers.
296-24-59201 Scope and application.
296-24-59212 Hydrostatic testing.
296-24-59215 Appendix A—Portable fire extinguishers.
296-24-602 Standpipe and hose systems.
296-24-60201 Scope and application.
296-24-60203 Protection of standpipes.
296-24-60205 Equipment.
296-24-60207 Water supply.
296-24-60209 Tests and maintenance.
296-24-60299 Appendix A—Standpipe and hose systems.
296-24-607 Automatic sprinkler systems.
296-24-60701 Scope and application.
296-24-60703 Exemptions.
296-24-60705 General requirements.
296-24-60799 Appendix A—Automatic sprinkler systems.
296-24-617 Fixed extinguishing systems, general.
296-24-61701 Scope and application.
296-24-61703 General requirements.
296-24-61705 Total flooding systems with potential health and safety hazards to employees.
296-24-61799 Appendix A—Fixed extinguishing systems, general.
296-24-622 Fixed extinguishing systems, dry chemical.
296-24-62201 Scope and application.
296-24-62203 Specific requirements.
296-24-62299 Appendix A—Fixed extinguishing systems, dry chemical.
296-24-623 Fixed extinguishing systems, gaseous agent.
296-24-62301 Scope and application.
296-24-62303 Specific requirements.
296-24-62399 Appendix A—Fixed extinguishing systems, gaseous agent.
296-24-627 Fixed extinguishing systems, water spray and foam.
296-24-62701 Scope and application.
296-24-62703 Specific requirements.
296-24-62799 Appendix A—Fixed extinguishing systems, water spray and foam.
296-24-629 Fire detection systems.
296-24-62901 Scope and application.
296-24-62903 Installation and restoration.
296-24-62905 Maintenance and testing.
296-24-62907 Protection of fire detectors.
296-24-62909 Response time.
296-24-62911 Number, location and spacing of detecting devices.
296-24-62999 Appendix A—Fire detection systems.
296-24-63299 Appendix B—National consensus standards.
296-24-63399 Appendix C—Fire protection references for further information.
296-24-63499 Appendix D—Availability of publications incorporated by references in WAC 296-24-58505—Fire brigades.
296-24-63599 Appendix E—Test methods for protective clothing.

PART H-2
SAFE PRACTICES AND VENTILATION OF ABRASIVE BLASTING OPERATIONS
Note: Safe practices and ventilation of abrasive blasting operations have been moved to chapter 296-818 WAC.

PART I
WELDING, CUTTING AND BRAZING

296-24-680 Welding, cutting, and brazing.
296-24-68001 Definitions.
296-24-682 Installation and operation of oxygen fuel gas systems for welding and cutting.
296-24-68201 General requirements.
296-24-68203 Cylinders and containers.
296-24-68205 Manifolding of cylinders.
296-24-68207 Service piping systems.
296-24-68209 Protective equipment, hose, and regulators.
296-24-68211 Acetylene generators.
296-24-68213 Calcium carbide storage.
296-24-68215 Public exhibitions and demonstrations.
296-24-685 Application, installation, and operation of arc welding and cutting equipment.
296-24-68501 General.
296-24-68503 Application of arc welding equipment.
296-24-68505 Installation of arc welding equipment.
296-24-68507 Operation and maintenance.
296-24-690 Installation and operation of resistance welding equipment.
296-24-69001 General.
296-24-69003 Spot and seam welding machines (nonportable).
296-24-69005 Portable welding machines.
296-24-69007 Flash welding equipment.
296-24-69009 Hazards and precautions.
296-24-69011 Maintenance.
296-24-695 Fire prevention and protection.
296-24-69501 Basic precautions.
296-24-69503 Special precautions.
296-24-69505 Welding or cutting containers.
296-24-69507 Confined spaces.
296-24-700 Protection of employees.
296-24-70001 General.
296-24-70003 Eye protection.
296-24-70005 Protective clothing.
296-24-70007 Work in confined spaces.
296-24-715 Health protection and ventilation.
296-24-71501 General.
296-24-71503 Ventilation for general welding and cutting.
296-24-71505 Local exhaust hoods and booths.
296-24-71507 Ventilation in confined spaces.
296-24-71509 Fluorine compounds.
296-24-71511 Zinc.
296-24-71513 Lead.
296-24-71515 Beryllium.
296-24-71517 Cadmium.
296-24-71519 Mercury.
296-24-71521 Cleaning compounds.
296-24-71523 Cutting of stainless steels.
296-24-71525 First-aid equipment.
296-24-720 Industrial applications.
296-24-72001 Transmission pipeline.
296-24-72003 Mechanical piping systems.
296-24-722 Welding, cutting, and heating in way of preservative coatings.

PART J-1
WORKING SURFACES, GUARDING FLOORS AND WALL OPENINGS

Note: Requirements relating to portable ladders and fixed ladders have been moved to chapter 296-876 WAC, Ladders, portable and fixed.

296-24-735 Walking-working surfaces.
296-24-73501 General requirements.
296-24-73505 Aisles and passageways.
296-24-73507 Covers and guardrails.
296-24-73511 Steam pipes.
296-24-750 Guarding floor and wall openings and holes.
296-24-75001 Terms.
296-24-75003 Protection for floor openings.
296-24-75005 Protection for wall openings and holes.
296-24-75007 Protection of open-sided runways.
296-24-75011 Railing, toeboards, and cover specifications.
296-24-765 Fixed industrial stairs.
296-24-76501 Terms.
296-24-76503 Application of requirements.
296-24-76507 Stair strength.
296-24-76509 Stair width.
296-24-76511 Angle of stairway rise.
296-24-76513 Stair treads.
296-24-76515 Length of stairways.
296-24-76519 Vertical clearance.
296-24-76521 Open risers.
296-24-76523 General.
296-24-76555 Alternating tread-type stairs.
296-24-855 Other working surfaces.
296-24-85501 Dockboards (bridge plates).
296-24-85503 Forging machine area.
296-24-85505 Veneer machinery.

PART J-2
SCAFFOLDS

296-24-862 Nonmandatory appendices.

PART J-3
POWERED PLATFORMS

Note: Powered platforms have been moved to chapters 296-869 and 296-870 WAC.

296-24-88050 Appendix C—Personal fall arrest system (Part I—Mandatory; Parts II and III—Nonmandatory).

PART K
COMPRESSED GAS AND COMPRESSED GAS EQUIPMENT

296-24-920 Inspection of compressed gas cylinders.
296-24-92001 Definitions.
296-24-92003 General requirements.
296-24-92005 Inspection of low-pressure cylinders exempt from the hydrostatic test including acetylene cylinders.
296-24-92007 Low-pressure cylinders subject to hydrostatic testing.
296-24-92009 High-pressure cylinders.
296-24-92011 Internal inspection.
296-24-930 Safety relief devices for compressed gas cylinders.
296-24-93001 Definitions.
296-24-93003 General requirements.
296-24-935 Safety relief devices for cargo and portable tanks storing compressed gases.
296-24-93501 Definitions.
296-24-93503 General requirements.
296-24-940 Air receivers.
296-24-94001 General requirements.
296-24-94003 Installation and equipment requirements.

PART L
ELECTRICAL

296-24-956 Electrical.
296-24-95601 Definitions applicable to WAC 296-24-956 through 296-24-985.
296-24-95603 Electric utilization systems.
296-24-95605 General requirements.
296-24-95607 Wiring design and protection.
296-24-95609 Wiring methods, components, and equipment for general use.
296-24-95611 Specific purpose equipment and installations.
296-24-95613 Hazardous (classified) locations.
296-24-95615 Special systems.
296-24-95617 Reserved.
296-24-95699 Appendices.
296-24-960 Working on or near exposed energized parts.
296-24-965 Safety-related work practices.
296-24-970 Training.
296-24-975 Selection and use of work practices.
296-24-980 Safeguards for personnel protection.
296-24-985 Use of equipment.

DISPOSITION OF SECTIONS FORMERLY CODIFIED IN THIS CHAPTER

296-24-001 Foreword. [Statutory Authority: Chapter 49.17 RCW. 94-15-096 (Order 94-07), § 296-24-001, filed 7/20/94, effective 9/20/94; Order 73-5, § 296-24-001, filed 5/9/73 and Order 73-4, § 296-24-001, filed 5/7/73.] Repealed by 01-11-038, filed 5/9/01, effective 9/1/01. Statutory Authority: RCW 49.17.010, [49.17].040, and [49.17].050.

296-24-006 Equipment approval by nonstate agency or organization. [Statutory Authority: Chapter 49.17 RCW. 94-15-096 (Order 94-07), § 296-24-006, filed 7/20/94, effective 9/20/94; Order 73-5, § 296-24-006, filed 5/9/73 and Order 73-4, § 296-24-006, filed 5/7/73.] Repealed by 01-11-038, filed 5/9/01, effective 9/1/01. Statutory Authority: RCW 49.17.010, [49.17].040, and [49.17].-050.

296-24-007 Incorporation of standards of national organization. [Statutory Authority: Chapter 49.17 RCW. 94-20-057 (Order 94-16), § 296-24-007, filed 9/30/94, effective 11/20/94; Order 73-5, § 296-24-007, filed 5/9/73 and Order 73-4, § 296-24-007, filed 5/7/73.] Repealed by 01-11-038, filed 5/9/01, effective 9/1/01. Statutory Authority: RCW 49.17.010, [49.17].040, and [49.17].-050.

296-24-008 Incorporation of standards of federal agency. [Order 73-5, § 296-24-008, filed 5/9/73 and Order 73-4, § 296-24-008, filed 5/7/73.] Repealed by 01-11-038, filed 5/9/01, effective 9/1/01. Statutory Authority: RCW 49.17.010, [49.17].040, and [49.17].050.

296-24-010 Variance and procedure. [Statutory Authority: Chapter 49.17 RCW. 94-15-096 (Order 94-07), § 296-24-010, filed 7/20/94, effective 9/20/94; 91-24-017 (Order 91-07), § 296-24-010, filed 11/22/91, effective 12/24/91; Order 74-27, § 296-24-010, filed 5/7/74; Order 73-5, § 296-24-010, filed 5/9/73 and Order 73-4, § 296-24-010, filed 5/7/73.] Repealed by 01-11-038, filed 5/9/01, effective 9/1/01. Statutory Authority: RCW 49.17.010, [49.17].040, and [49.17].050.

296-24-015 Education and first-aid standards. [Statutory Authority: Chapter 49.17 RCW. 94-15-096 (Order 94-07), § 296-24-015, filed 7/20/94, effective 9/20/94. Statutory Authority: RCW 49.17.040, 49.17.050, 49.17.240, chapters 43.22 and 42.30 RCW. 80-17-015 (Order 80-21), § 296-24-015, filed 11/13/80; Order 73-5, § 296-24-015, filed 5/9/73 and Order 73-4, § 296-24-015, filed 5/7/73.] Repealed by 01-11-038, filed 5/9/01, effective 9/1/01. Statutory Authority: RCW 49.17.010, [49.17].-040, and [49.17].050.

296-24-020 Management's responsibility. [Statutory Authority: Chapter 49.17 RCW. 94-20-057 (Order 94-16), § 296-24-020, filed 9/30/94, effective 11/20/94; 91-24-017 (Order 91-07), § 296-24-020, filed 11/22/91, effective 12/24/91; 91-03-044 (Order 90-18), § 296-24-020, filed 1/10/91, effective 2/12/91; 90-03-029 (Order 89-20), § 296-24-020, filed 1/11/90, effective 2/26/90. Statutory Authority: RCW 49.17.040, 49.17.050, 49.17.240 and chapters 42.30 and 43.22 RCW. 78-12-017 (Order 78-22), § 296-24-020, filed 11/13/78; Order 74-27, § 296-24-020, filed 5/7/74; Order 73-5, § 296-24-020, filed 5/9/73 and Order 73-4, § 296-24-020, filed 5/7/73.] Repealed by 01-11-038, filed 5/9/01, effective 9/1/01. Statutory Authority: RCW 49.17.010, [49.17].040, and [49.17].050.

296-24-025 Employee's responsibility. [Order 74-27, § 296-24-025, filed 5/7/74; Order 73-5, § 296-24-025, filed 5/9/73 and Order 73-4, § 296-24-025, filed 5/7/73.] Repealed by 01-11-038, filed 5/9/01, effective 9/1/01. Statutory Authority: RCW 49.17.010, [49.17].040, and [49.17].-050.

296-24-040 Accident prevention programs. [Statutory Authority: RCW 49.17.010, [49.17].040 and [49.17].050. 99-17-093, § 296-24-040, filed 8/17/99, effective 12/1/99. Statutory Authority: Chapter 49.17 RCW. 94-15-096 (Order 94-07), § 296-24-040, filed 7/20/94, effective 9/20/94. Statutory Authority: RCW 49.17.040, 49.17.050, 49.17.240 and chapters 42.30 and 43.22 RCW. 78-12-017 (Order 78-22), § 296-24-040, filed

11/13/78; Order 74-27, § 296-24-040, filed 5/7/74; Order 73-5, § 296-24-040, filed 5/9/73 and Order 73-4, § 296-24-040, filed 5/7/73.] Repealed by 01-11-038, filed 5/9/01, effective 9/1/01. Statutory Authority: RCW 49.17.010, [49.17].040, and [49.17].050.

296-24-045 Safety and health committee plan. [Statutory Authority: Chapter 49.17 RCW. 94-15-096 (Order 94-07), § 296-24-045, filed 7/20/94, effective 9/20/94. Statutory Authority: RCW 49.17.040, 49.17.050, 49.17.240, chapters 42.30 and 43.22 RCW. 80-17-014 (Order 80-20), § 296-24-045, filed 11/13/80; 78-12-017 (Order 78-22), § 296-24-045, filed 11/13/78.] Repealed by 01-11-038, filed 5/9/01, effective 9/1/01. Statutory Authority: RCW 49.17.010, [49.17].040, and [49.17].050.

296-24-055 Safety bulletin board. [Order 73-5, § 296-24-055, filed 5/9/73 and Order 73-4, § 296-24-055, filed 5/7/73.] Repealed by 01-11-038, filed 5/9/01, effective 9/1/01. Statutory Authority: RCW 49.17.010, [49.17].040, and [49.17].050.

296-24-060 First-aid training and certification. [Statutory Authority: Chapter 49.17 RCW. 94-15-096 (Order 94-07), § 296-24-060, filed 7/20/94, effective 9/20/94. Statutory Authority: RCW 49.17.040, 49.17.050 and 49.17.240. 81-13-053 (Order 81-9), § 296-24-060, filed 6/17/81. Statutory Authority: RCW 49.17.040, 49.17.050, 49.17.240, chapters 42.30 and 43.22 RCW. 80-17-014 (Order 80-20), § 296-24-060, filed 11/13/80; 78-12-017 (Order 78-22), § 296-24-060, filed 11/13/78; Order 74-27, § 296-24-060, filed 5/7/74; Order 73-5, § 296-24-060, filed 5/9/73 and Order 73-4, § 296-24-060, filed 5/7/73.] Repealed by 98-06-061, filed 3/2/98, effective 6/1/98. Statutory Authority: Chapter 49.17 RCW.

296-24-061 First-aid requirements. [Statutory Authority: Chapter 49.17 RCW. 98-06-061, § 296-24-061, filed 3/2/98, effective 6/1/98.] Repealed by 01-11-038, filed 5/9/01, effective 9/1/01. Statutory Authority: RCW 49.17.010, [49.17].040, and [49.17].050.

296-24-06105 What workplaces does this rule apply to? [Statutory Authority: RCW 49.17.040. 99-02-023, § 296-24-06105, filed 12/30/98, effective 3/30/99. Statutory Authority: Chapter 49.17 RCW. 98-06-061, § 296-24-06105, filed 3/2/98, effective 6/1/98.] Repealed by 01-11-038, filed 5/9/01, effective 9/1/01. Statutory Authority: RCW 49.17.010, [49.17].040, and [49.17].050.

296-24-06110 What is the purpose of this rule? [Statutory Authority: Chapter 49.17 RCW. 98-06-061, § 296-24-06110, filed 3/2/98, effective 6/1/98.] Repealed by 01-11-038, filed 5/9/01, effective 9/1/01. Statutory Authority: RCW 49.17.010, [49.17].040, and [49.17].050.

296-24-06115 What definitions apply to this section? [Statutory Authority: Chapter 49.17 RCW. 98-06-061, § 296-24-06115, filed 3/2/98, effective 6/1/98.] Repealed by 01-11-038, filed 5/9/01, effective 9/1/01. Statutory Authority: RCW 49.17.010, [49.17].040, and [49.17].050.

296-24-06120 How must an employer ensure that first-aid assistance is available in the workplace? [Statutory Authority: Chapter 49.17 RCW. 98-06-061, § 296-24-06120, filed 3/2/98, effective 6/1/98.] Repealed by 01-11-038, filed 5/9/01, effective 9/1/01. Statutory Authority: RCW 49.17.010, [49.17].040, and [49.17].050.

296-24-06125 How many employees must be trained in first aid? [Statutory Authority: Chapter 49.17 RCW. 98-06-061, § 296-24-06125, filed 3/2/98, effective 6/1/98.] Repealed by 01-11-038, filed 5/9/01, effective 9/1/01. Statutory Authority: RCW 49.17.010, [49.17].040, and [49.17].-050.

296-24-06130 What must first-aid training cover? [Statutory Authority: Chapter 49.17 RCW. 98-06-061, § 296-24-06130, filed 3/2/98, effective 6/1/98.] Repealed by 01-11-038, filed 5/9/01, effective 9/1/01. Statutory Authority: RCW 49.17.010, [49.17].040, and [49.17].050.

296-24-06135 How often must employees complete first-aid training? [Statutory Authority: Chapter 49.17 RCW. 98-06-061, § 296-24-06135, filed 3/2/98, effective 6/1/98.] Repealed by 01-11-038, filed 5/9/01, effective 9/1/01. Statutory Authority: RCW 49.17.010, [49.17].040, and [49.17].050.

296-24-06140 How must an employer document first-aid training? [Statutory Authority: Chapter 49.17 RCW. 98-06-061, § 296-24-06140, filed 3/2/98, effective 6/1/98.] Repealed by 01-11-038, filed 5/9/01, effective 9/1/01. Statutory Authority: RCW 49.17.010, [49.17].040, and [49.17].050.

296-24-06145 What is the requirement for first-aid supplies? [Statutory Authority: Chapter 49.17 RCW. 98-06-061, § 296-24-06145, filed 3/2/98, effective 6/1/98.] Repealed by 01-11-038, filed 5/9/01, effective 9/1/01. Statutory Authority: RCW 49.17.010, [49.17].040, and [49.17].-050.

296-24-06150 What is the requirement to provide a first-aid station? [Statutory Authority: Chapter 49.17 RCW. 98-06-061, § 296-24-06150, filed 3/2/98, effective 6/1/98.] Repealed by 01-11-038, filed 5/9/01, effective 9/1/01. Statutory Authority: RCW 49.17.010, [49.17].040, and [49.17].050.

296-24-06155 APPENDIX 1 Evaluation worksheet for the first-aid response plan. [Statutory Authority: Chapter 49.17 RCW. 98-06-061, § 296-24-06155, filed 3/2/98, effective 6/1/98.] Repealed by 01-11-038, filed 5/9/01, effective 9/1/01. Statutory Authority: RCW 49.17.010, [49.17].040, and [49.17].050.

296-24-06160 APPENDIX 2—First-aid kit guidance. [Statutory Authority: Chapter 49.17 RCW. 98-06-061, § 296-24-06160, filed 3/2/98, effective 6/1/98.] Repealed by 01-11-038, filed 5/9/01, effective 9/1/01. Statutory Authority: RCW 49.17.010, [49.17].040, and [49.17].050.

296-24-065 First-aid kit. [Statutory Authority: Chapter 49.17 RCW. 94-15-096 (Order 94-07), § 296-24-065, filed 7/20/94, effective 9/20/94; 91-03-044 (Order 90-18), § 296-24-065, filed 1/10/91, effective 2/12/91; Order 74-27, § 296-24-065, filed 5/7/74; Order 73-5, § 296-24-065, filed 5/9/73 and Order 73-4, § 296-24-065, filed 5/7/73.] Repealed by 98-06-061, filed 3/2/98, effective 6/1/98. Statutory Authority: Chapter 49.17 RCW.

296-24-067 First-aid station. [Order 73-5, § 296-24-067, filed 5/9/73 and Order 73-4, § 296-24-067, filed 5/7/73.] Repealed by 98-06-061, filed 3/2/98, effective 6/1/98. Statutory Authority: Chapter 49.17 RCW.

296-24-070 First-aid room. [Statutory Authority: RCW 49.17.040, 49.17.050 and 49.17.240. 81-13-053 (Order 81-9), § 296-24-070, filed 6/17/81; Order 73-5, § 296-24-070, filed 5/9/73 and Order 73-4, § 296-24-070, filed 5/7/73.] Repealed by 98-06-061, filed 3/2/98, effective 6/1/98. Statutory Authority: Chapter 49.17 RCW.

296-24-073 Safe place standards. [Statutory Authority: Chapter 49.17 RCW. 94-15-096 (Order 94-07), § 296-24-073, filed 7/20/94, effective 9/20/94. Statutory Authority: RCW 49.17.040 and 49.17.050. 85-01-022 (Order 84-24), § 296-24-073, filed 12/11/84; Order 74-27, § 296-24-073, filed 5/7/74; Order 73-5, § 296-24-073, filed 5/9/73 and Order 73-4, § 296-24-073, filed 5/7/73.] Repealed by 01-11-038, filed 5/9/01, effective 9/1/01. Statutory Authority: RCW 49.17.010, [49.17].040, and [49.17].050.

296-24-075 Personal protective equipment. [Order 73-5, § 296-24-075, filed 5/9/73 and Order 73-4, § 296-24-075, filed 5/7/73.] Repealed by 01-11-038, filed 5/9/01, effective 9/1/01. Statutory Authority: RCW 49.17.010, [49.17].-040, and [49.17].050.

296-24-07501 General requirements. [Statutory Authority: RCW 49.17.010, [49.17].040 and [49.17].050. 99-10-071, § 296-24-07501, filed 5/4/99, effective 9/1/99. Statutory Authority: Chapter 49.17 RCW. 94-20-057 (Order 94-16), § 296-24-07501, filed 9/30/94, effective 11/20/94; Order 73-5, § 296-24-07501, filed 5/9/73 and Order 73-4, § 296-24-07501, filed 5/7/73.] Repealed by 01-11-038, filed 5/9/01, effective 9/1/01. Statutory Authority: RCW 49.17.010, [49.17].040, and [49.17].050.

296-24-078 Eye and face protection. [Order 73-5, § 296-24-078, filed 5/9/73 and Order 73-4, § 296-24-078, filed 5/7/73.] Repealed by 01-11-038, filed 5/9/01, effective 9/1/01. Statutory Authority: RCW 49.17.010, [49.17].040, and [49.17].050.

296-24-07801 General. [Statutory Authority: RCW 49.17.040, [49.17.]050 and [49.17.]060. 97-11-055, § 296-24-07801, filed 5/20/97, effective 8/1/97. Statutory Authority: Chapter 49.17 RCW. 94-20-057 (Order 94-16), § 296-24-07801, filed 9/30/94, effective 11/20/94; Order 73-5, § 296-24-07801, filed 5/9/73 and Order 73-4, § 296-24-07801, filed 5/7/73.] Repealed by 01-11-038, filed 5/9/01, effective 9/1/01. Statutory Authority: RCW 49.17.010, [49.17].040, and [49.17].050.

296-24-081 Respiratory protection. [Order 73-5, § 296-24-081, filed 5/9/73 and order 73-4, § 296-24-081, filed 5/7/73.] Repealed by 81-16-016 (order 81-19), filed 7/27/81. Statutory Authority: RCW 49.17.040, 49.17.050 and

49.17.240. Later promulgation, see chapter 296-62 WAC.

296-24-08101 Permissible practice. [Order 73-5, § 296-24-08101, filed 5/9/73 and Order 73-4, § 296-24-08101, filed 5/7/73.] Repealed by 81-16-016 (Order 81-19), filed 7/27/81. Statutory Authority: RCW 49.17.040, 49.17.050 and 49.17.240.

296-24-08103 Requirements for a minimal acceptable program. [Statutory Authority: RCW 49.17.040, 49.17.050, and 49.17.240. 80-11-010 (Order 80-14), § 296-24-08103, filed 8/8/80; Order 73-5, § 296-24-08103, filed 5/9/73 and Order 73-4, § 296-24-08103, filed 5/7/73.] Repealed by 81-16-016 (Order 81-19), filed 7/27/81. Statutory Authority: RCW 49.17.040, 49.17.050 and 49.17.240.

296-24-08105 Selection of respirators. [Order 73-5, § 296-24-08105, filed 5/9/73 and Order 73-4, § 296-24-08105, filed 5/7/73.] Repealed by 81-16-016 (Order 81-19), filed 7/27/81. Statutory Authority: RCW 49.17.040, 49.17.-050 and 49.17.240.

296-24-08107 Air quality. [Statutory Authority: RCW 49.17.040, 49.17.050, and 49.17.240. 80-11-010 (Order 80-14), § 296-24-08107, filed 8/8/80; Order 73-5, § 296-24-08107, filed 5/9/73 and Order 73-4, § 296-24-08107, filed 5/7/73.] Repealed by 81-16-016 (Order 81-19), filed 7/27/81. Statutory Authority: RCW 49.17.040, 49.17.050 and 49.17.240.

296-24-08109 Use of respirators. [Statutory Authority: RCW 49.17.-040, 49.17.050, and 49.17.240. 80-11-010 (Order 80-14), § 296-24-08109, filed 8/8/80; Order 73-5, § 296-24-08109, filed 5/9/73 and Order 73-4, § 296-24-08109, filed 5/7/73.] Repealed by 81-16-016 (Order 81-19), filed 7/27/81. Statutory Authority: RCW 49.17.040, 49.17.050 and 49.17.240.

296-24-08111 Maintenance and care of respirators. [Order 73-5, § 296-24-08111, filed 5/9/73 and Order 73-4, § 296-24-08111, filed 5/7/73.] Repealed by 81-16-016 (Order 81-19), filed 7/27/81. Statutory Authority: RCW 49.17.040, 49.17.050 And 49.17.240.

296-24-08113 Identification of gas mask canisters. [Order 73-5, § 296-24-08113, filed 5/9/73 and Order 73-4, § 296-24-08113, filed 5/7/73.] Repealed by 81-16-016 (Order 81-19), filed 7/27/81. Statutory Authority: RCW 49.17.040, 49.17.050 and 49.17.240.

296-24-084 Occupational head protection. [Statutory Authority: RCW 49.17.040, [49.17.]050 and [49.17.]060. 97-11-055, § 296-24-084, filed 5/20/97, effective 8/1/97. Statutory Authority: Chapter 49.17 RCW. 96-09-030, § 296-24-084, filed 4/10/96, effective 6/1/96; 94-20-057 (Order 94-16), § 296-24-084, filed 9/30/94, effective 11/20/94; 91-03-044 (Order 90-18), § 296-24-084, filed 1/10/91, effective 2/12/91; Order 74-27, § 296-24-084, filed 5/7/74; Order 73-5, § 296-24-084, filed 5/9/73 and Order 73-4, § 296-24-084, filed 5/7/73.] Repealed by 01-11-038, filed 5/9/01, effective 9/1/01. Statutory Authority: RCW 49.17.010, [49.17].040, and [49.17].-050.

296-24-086 Personal flotation devices. [Order 76-6, § 296-24-086, filed 3/1/76.] Repealed by 01-11-038, filed 5/9/01, effective 9/1/01. Statutory Authority: RCW 49.17.010, [49.17].040, and [49.17].050.

296-24-088 Occupational foot protection. [Statutory Authority: RCW 49.17.040, [49.17.]050 and [49.17.]060. 97-11-055, § 296-24-088, filed 5/20/97, effective 8/1/97. Statutory Authority: Chapter 49.17 RCW. 94-20-057 (Order 94-16), § 296-24-088, filed 9/30/94, effective 11/20/94; 94-15-096 (Order 94-07), § 296-24-088, filed 7/20/94, effective 9/20/94; Order 73-5, § 296-24-088, filed 5/9/73 and Order 73-4, § 296-24-088, filed 5/7/73.] Repealed by 01-11-038, filed 5/9/01, effective 9/1/01. Statutory Authority: RCW 49.17.010, [49.17].040, and [49.17].050.

296-24-090 Hand protection. [Statutory Authority: Chapter 49.17 RCW. 94-20-057 (Order 94-16), § 296-24-090, filed 9/30/94, effective 11/20/94.] Repealed by 01-11-038, filed 5/9/01, effective 9/1/01. Statutory Authority: RCW 49.17.010, [49.17].040, and [49.17].050.

296-24-092 Electrical protective equipment. [Statutory Authority: Chapter 49.17 RCW. 96-09-030, § 296-24-092, filed 4/10/96, effective 6/1/96; 94-20-057 (Order 94-16), § 296-24-092, filed 9/30/94, effective 11/20/94; Order 73-5, § 296-24-092, filed 5/9/73 and Order 73-4, § 296-24-092, filed 5/7/73.] Repealed by 01-11-038, filed 5/9/01, effective 9/1/01. Statutory Authority: RCW 49.17.010, [49.17].040, and [49.17].050.

296-24-094 Lighting and illumination. [Order 74-27, § 296-24-094, filed 5/7/74.] Repealed by 01-11-038, filed 5/9/01, effective 9/1/01. Statutory Authority: RCW 49.17.010, [49.17].040, and [49.17].050.

296-24-096 Appendix A to Part A-2—References for further information (nonmandatory). [Statutory Authority: Chapter 49.17 RCW. 94-20-057 (Order 94-16), § 296-24-096, filed 9/30/94, effective 11/20/94.] Repealed by 01-11-038, filed 5/9/01, effective 9/1/01. Statutory Authority: RCW 49.17.010, [49.17].040, and [49.17].050.

296-24-098 Appendix B to Part A-2—Nonmandatory compliance guidelines for hazard assessment and personal protective equipment selection. [Statutory Authority: Chapter 49.17 RCW. 94-20-057 (Order 94-16), § 296-24-098, filed 9/30/94, effective 11/20/94.] Repealed by 01-11-038, filed 5/9/01, effective 9/1/01. Statutory Authority: RCW 49.17.010, [49.17].040, and [49.17].050.

296-24-102 Scope and application. [Statutory Authority: Chapter 49.17 RCW. 90-03-029 (Order 89-20), § 296-24-102, filed 1/11/90, effective 2/26/90.] Repealed by 02-16-087, filed 8/7/02, effective 10/1/02. Statutory Authority: RCW 49.17.010, [49.17].040, [49.17].050, and [49.17].060. Later promulgation, see chapter 296-832 WAC.

296-24-10203 General requirements. [Statutory Authority: RCW 49.17.010, [49.17].040, and [49.17].050. 01-11-038, § 296-24-10203, filed 5/9/01, effective 9/1/01. Statutory Authority: Chapter 49.17 RCW. 90-03-029 (Order 89-20), § 296-24-10203, filed 1/11/90, effective 2/26/90.] Repealed by 02-16-087, filed 8/7/02, effective 10/1/02. Statutory Authority: RCW 49.17.010, [49.17].040, [49.17].050, and [49.17].060. Later promulgation, see chapter 296-832 WAC.

296-24-110 The control of hazardous energy (lockout/tagout). [Statutory Authority: Chapter 49.17 RCW. 90-20-091 (Order 90-14), § 296-24-110, filed 10/1/90, effective 11/15/90.] Repealed by 04-15-105, filed 7/20/04, effective 11/1/04. Statutory Authority: RCW 49.17.010, 49.17.040, 49.17.050, and 49.17.060.

296-24-11001 Scope, application, and purpose. [Statutory Authority: Chapter 49.17 RCW. 94-06-068 (Order 93-17), § 296-24-11001, filed 3/2/94, effective 3/1/95. Statutory Authority: Chapter 49.17 RCW and RCW 49.17.040, [49.17].050 and [49.17].060. 92-22-067 (Order 92-06), § 296-24-11001, filed 10/30/92, effective 12/8/92. Statutory Authority: Chapter 49.17 RCW. 91-11-070 (Order 91-01), § 296-24-11001, filed 5/20/91, effective 6/20/91; 90-20-091 (Order 90-14), § 296-24-11001, filed 10/1/90, effective 11/15/90.] Repealed by 04-15-105, filed 7/20/04, effective 11/1/04. Statutory Authority: RCW 49.17.010, 49.17.040, 49.17.050, and 49.17.-060.

296-24-11003 Definitions applicable to this part. [Statutory Authority: Chapter 49.17 RCW. 93-19-142 (Order 93-04), § 296-24-11003, filed 9/22/93, effective 11/1/93. Statutory Authority: Chapter 49.17 RCW and RCW 49.17.040, [49.17].050 and [49.17].060. 92-22-067 (Order 92-06), § 296-24-11003, filed 10/30/92, effective 12/08/92. Statutory Authority: Chapter 49.17 RCW. 91-11-070 (Order 91-01), § 296-24-11003, filed 5/20/91, effective 6/20/91; 90-20-091 (Order 90-14), § 296-24-11003, filed 10/1/90, effective 11/15/90.] Repealed by 04-15-105, filed 7/20/04, effective 11/1/04. Statutory Authority: RCW 49.17.010, 49.17.040, 49.17.050, and 49.17.-060.

296-24-11005 General. [Statutory Authority: Chapter 49.17 RCW and RCW 49.17.040, [49.17].050 and [49.17].060. 92-22-067 (Order 92-06), § 296-24-11005, filed 10/30/92, effective 12/8/92. Statutory Authority: Chapter 49.17 RCW. 91-11-070 (Order 91-01), § 296-24-11005, filed 5/20/91, effective 6/20/91; 90-20-091 (Order 90-14), § 296-24-11005, filed 10/1/90, effective 11/15/90.] Repealed by 04-15-105, filed 7/20/04, effective 11/1/04. Statutory Authority: RCW 49.17.010, 49.17.040, 49.17.050, and 49.17.060.

296-24-11007 Application of control. [Statutory Authority: Chapter 49.17 RCW and RCW 49.17.040, [49.17].050 and [49.17].060. 92-22-067 (Order 92-06), § 296-24-11007, filed 10/30/92, effective 12/8/92. Statutory Authority: Chapter 49.17 RCW. 91-11-070 (Order 91-01), § 296-24-11007, filed 5/20/91, effective 6/20/91; 90-20-091 (Order 90-14), § 296-24-11007, filed 10/1/90, effective

11/15/90.] Repealed by 04-15-105, filed 7/20/04, effective 11/1/04. Statutory Authority: RCW 49.17.010, 49.17.040, 49.17.050, and 49.17.060.

296-24-11009 Release from lockout or tagout. [Statutory Authority: Chapter 49.17 RCW and RCW 49.17.040, [49.17].050 and [49.17].060. 92-22-067 (Order 92-06), § 296-24-11009, filed 10/30/92, effective 12/8/92. Statutory Authority: Chapter 49.17 RCW. 91-11-070 (Order 91-01), § 296-24-11009, filed 5/20/91, effective 6/20/91; 90-20-091 (Order 90-14), § 296-24-11009, filed 10/1/90, effective 11/15/90.] Repealed by 04-15-105, filed 7/20/04, effective 11/1/04. Statutory Authority: RCW 49.17.010, 49.17.040, 49.17.050, and 49.17.060.

296-24-11011 Additional requirements. [Statutory Authority: Chapter 49.17 RCW and RCW 49.17.040, [49.17].050 and [49.17].060. 92-22-067 (Order 92-06), § 296-24-11011, filed 10/30/92, effective 12/8/92. Statutory Authority: Chapter 49.17 RCW. 91-11-070 (Order 91-01), § 296-24-11011, filed 5/20/91, effective 6/20/91; 90-20-091 (Order 90-14), § 296-24-11011, filed 10/1/90, effective 11/15/90.] Repealed by 04-15-105, filed 7/20/04, effective 11/1/04. Statutory Authority: RCW 49.17.010, 49.17.040, 49.17.050, and 49.17.060.

296-24-11013 Reserved. [Statutory Authority: Chapter 49.17 RCW and RCW 49.17.040, [49.17].050 and [49.17].060. 92-22-067 (Order 92-06), § 296-24-11013, filed 10/30/92, effective 12/8/92. Statutory Authority: Chapter 49.17 RCW. 91-11-070 (Order 91-01), § 296-24-11013, filed 5/20/91, effective 6/20/91; 90-20-091 (Order 90-14), § 296-24-11013, filed 10/1/90, effective 11/15/90.] Repealed by 04-15-105, filed 7/20/04, effective 11/1/04. Statutory Authority: RCW 49.17.010, 49.17.040, 49.17.050, and 49.17.060.

296-24-11015 Reserved. [Statutory Authority: Chapter 49.17 RCW and RCW 49.17.040, [49.17].050 and [49.17].060. 92-22-067 (Order 92-06), § 296-24-11015, filed 10/30/92, effective 12/8/92. Statutory Authority: Chapter 49.17 RCW. 91-11-070 (Order 91-01), § 296-24-11015, filed 5/20/91, effective 6/20/91; 90-20-091 (Order 90-14), § 296-24-11015, filed 10/1/90, effective 11/15/90.] Repealed by 04-15-105, filed 7/20/04, effective 11/1/04. Statutory Authority: RCW 49.17.010, 49.17.040, 49.17.050, and 49.17.060.

296-24-11017 Reserved. [Statutory Authority: Chapter 49.17 RCW and RCW 49.17.040, [49.17].050 and [49.17].060. 92-22-067 (Order 92-06), § 296-24-11017, filed 10/30/92, effective 12/8/92. Statutory Authority: Chapter 49.17 RCW. 91-11-070 (Order 91-01), § 296-24-11017, filed 5/20/91, effective 6/20/91; 90-20-091 (Order 90-14), § 296-24-11017, filed 10/1/90, effective 11/15/90.] Repealed by 04-15-105, filed 7/20/04, effective 11/1/04. Statutory Authority: RCW 49.17.010, 49.17.040, 49.17.050, and 49.17.060.

296-24-119 Appendices. [Statutory Authority: Chapter 49.17 RCW and RCW 49.17.040, [49.17].050 and [49.17].060. 92-22-067 (Order 92-06), § 296-24-119, filed 10/30/92, effective 12/8/92. Statutory Authority: Chapter 49.17 RCW. 91-11-070 (Order 91-01), § 296-24-119, filed 5/20/91, effective 6/20/91; 90-20-091 (Order 90-14), § 296-24-119, filed 10/1/90, effective 11/15/90.] Repealed by 04-15-105, filed 7/20/04, effective 11/1/04. Statutory Authority: RCW 49.17.010, 49.17.040, 49.17.050, and 49.17.060.

296-24-120 Sanitation. [Statutory Authority: RCW 49.17.010, 49.17.040, 49.17.050, and 49.17.060. 03-18-090, § 296-24-120, filed 9/2/03, effective 11/1/03; Order 73-5, § 296-24-120, filed 5/9/73 and Order 73-4, § 296-24-120, filed 5/7/73.] Repealed by 04-07-161, filed 3/23/04, effective 6/1/04. Statutory Authority: RCW 49.17.010, 49.17.040, 49.17.050, and 49.17.060.

296-24-12001 Scope. [Statutory Authority: RCW 49.17.010, [49.17].-040, and [49.17].050. 01-11-038, § 296-24-12001, filed 5/9/01, effective 9/1/01. Statutory Authority: RCW 49.17.010, [49.17].050 and [49.17].060. 95-22-015, § 296-24-12001, filed 10/20/95, effective 1/16/96. Statutory Authority: Chapter 49.17 RCW. 94-06-068 (Order 93-17), § 296-24-12001, filed 3/2/94, effective 3/1/95; Order 74-27, § 296-24-12001, filed 5/7/74; Order 73-5, § 296-24-12001, filed 5/9/73 and Order 73-4, § 296-24-12001, filed 5/7/73.] Repealed by 03-18-090, filed 9/2/03, effective 11/1/03. Statutory Authority: RCW 49.17.010, 49.17.040, 49.17.050, and 49.17.060. Later promulgation, see chapter 296-800 WAC.

296-24-12002 Definitions. [Statutory Authority: RCW 49.17.010, [49.17].040 and [49.17].050. 99-17-094, § 296-24-12002, filed 8/17/99, effective 12/1/99. Statutory Authority: Chapter 49.17 RCW. 91-11-070 (Order 91-01), § 296-24-12002, filed 5/20/91, effective 6/20/91; Order 74-27, § 296-24-12002, filed 5/7/74.] Repealed by 03-18-090, filed 9/2/03, effective 11/1/03. Statutory Authority: RCW 49.17.010, 49.17.040, 49.17.050, and 49.17.060. Later promulgation, see chapter 296-800 WAC.

296-24-12003 General requirements. [Order 74-27, § 296-24-12003, filed 5/7/74; Order 73-5, § 296-24-12003, filed 5/9/73 and Order 73-4, § 296-24-12003, filed 5/7/73.] Repealed by 01-11-038, filed 5/9/01, effective 9/1/01. Statutory Authority: RCW 49.17.010, [49.17].040, and [49.17].050.

296-24-12005 Water supply. [Statutory Authority: RCW 49.17.040 and 49.17.050. 82-13-045 (Order 82-22), § 296-24-12005, filed 6/11/82; Order 74-27, § 296-24-12005, filed 5/7/74; Order 73-5, § 296-24-12005, filed 5/9/73 and Order 73-4, § 296-24-12005, filed 5/7/73.] Repealed by 01-11-038, filed 5/9/01, effective 9/1/01. Statutory Authority: RCW 49.17.010, [49.17].040, and [49.17].050.

296-24-12007 Toilet facilities. [Statutory Authority: Chapter 49.17 RCW. 87-24-051 (Order 87-24), § 296-24-12007, filed 11/30/87. Statutory Authority: RCW 49.17.040 and 49.17.050. 82-02-003 (Order 81-32), § 296-24-12007, filed 12/24/81. Statutory Authority: RCW 49.17.040, 49.17.050, 49.17.240, chapters 43.22 and 42.30 RCW. 80-17-015 (Order 80-21), § 296-24-12007, filed 11/13/80; Order 74-27, § 296-24-12007, filed 5/7/74; Order 73-5, § 296-24-12007, filed 5/9/73 and Order 73-4, § 296-24-12007, filed 5/7/73.] Repealed by 01-11-038, filed 5/9/01, effective 9/1/01. Statutory Authority: RCW 49.17.010, [49.17].040, and [49.17].050.

296-24-12009 Washing facilities. [Statutory Authority: Chapter 49.17 RCW. 90-03-029 (Order 89-20), § 296-24-12009, filed 1/11/90, effective 2/26/90. Statutory Authority: RCW 49.17.040 and 49.17.050. 82-08-026 (Order 82-10), § 296-24-12009, filed 3/30/82. Statutory Authority: RCW 49.17.040, 49.17.050, 49.17.240, chapters 43.22 and 42.30 RCW. 80-17-015 (Order 80-21), § 296-24-12009, filed 11/13/80; Order 74-27, § 296-24-12009, filed 5/7/74; Order 73-5, § 296-24-12009, filed 5/9/73 and Order 73-4, § 296-24-12009, filed 5/7/73.] Repealed by 01-11-038, filed 5/9/01, effective 9/1/01. Statutory Authority: RCW 49.17.010, [49.17].040, and [49.17].050.

296-24-12010 Showers. [Statutory Authority: RCW 49.17.010, [49.17].040, and [49.17].050. 01-11-038, § 296-24-12010, filed 5/9/01, effective 9/1/01.] Repealed by 03-18-090, filed 9/2/03, effective 11/1/03. Statutory Authority: RCW 49.17.010, 49.17.040, 49.17.050, and 49.17.060. Later promulgation, see chapter 296-800 WAC.

296-24-12011 Change rooms. [Order 74-27, § 296-24-12011, filed 5/7/74; Order 73-5, § 296-24-12011, filed 5/9/73 and Order 73-4, § 296-24-12011, filed 5/7/73.] Repealed by 03-18-090, filed 9/2/03, effective 11/1/03. Statutory Authority: RCW 49.17.010, 49.17.040, 49.17.050, and 49.17.060. Later promulgation, see chapter 296-800 WAC.

296-24-12013 Lunchrooms. [Order 73-5, § 296-24-12013, filed 5/9/73 and Order 73-4, § 296-24-12013, filed 5/7/73.] Repealed by Order 74-27, filed 5/7/74.

296-24-12015 Food handling. [Order 73-5, § 296-24-12015, filed 5/9/73 and Order 73-4, § 296-24-12015, filed 5/7/73.] Repealed by Order 74-27, filed 5/7/74.

296-24-12017 Consumption of food and beverages on the premises. [Order 76-6, § 296-24-12017, filed 3/1/76; Order 74-27, § 296-24-12017, filed 5/7/74.] Repealed by 03-18-090, filed 9/2/03, effective 11/1/03. Statutory Authority: RCW 49.17.010, 49.17.040, 49.17.050, and 49.17.060. Later promulgation, see chapter 296-800 WAC.

296-24-12019 Waste disposal. [Order 74-27, § 296-24-12019, filed 5/7/74.] Repealed by 01-11-038, filed 5/9/01, effective 9/1/01. Statutory Authority: RCW 49.17.010, [49.17].040, and [49.17].050.

296-24-12021 Vermin control. [Order 74-27, § 296-24-12021, filed 5/7/74.] Repealed by 01-11-038, filed 5/9/01, effective 9/1/01. Statutory Authority: RCW 49.17.010, [49.17].040, and [49.17].050.

296-24-125 Temporary labor camps. [Order 73-5, § 296-24-125, filed 5/9/73 and Order 73-4, § 296-24-125, filed 5/7/73.] Repealed by 02-23-073, filed 11/19/02, effective 1/1/03. Statutory Authority: RCW 49.17.010, 49.[17.]040, 49.[17.]050, and 49.[17.]060. Later promulgation, see chapter 296-833 WAC.

296-24-12501 What requirements apply to camp sites? [Statutory Authority: RCW 49.17.040. 98-24-096, § 296-24-12501, filed 12/1/98, effective 3/1/99; Order 73-5, § 296-24-12501, filed 5/9/73 and Order 73-4, § 296-24-12501, filed 5/7/73.] Repealed by 02-23-073, filed 11/19/02, effective 1/1/03. Statutory Authority: RCW 49.17.010, 49.[17.]040, 49.[17.]050, and 49.[17.]060. Later promulgation, see chapter 296-833 WAC.

296-24-12503 How must camp shelters be constructed? [Statutory Authority: RCW 49.17.040. 98-24-096, § 296-24-12503, filed 12/1/98, effective 3/1/99; Order 73-5, § 296-24-12503, filed 5/9/73 and Order 73-4, § 296-24-12503, filed 5/7/73.] Repealed by 02-23-073, filed 11/19/02, effective 1/1/03. Statutory Authority: RCW 49.17.010, 49.[17.]040, 49.[17.]050, and 49.[17.]060. Later promulgation, see chapter 296-833 WAC.

296-24-12504 What electricity must be provided for temporary labor camps? [Statutory Authority: RCW 49.17.040. 98-24-096, § 296-24-12504, filed 12/1/98, effective 3/1/99.] Repealed by 02-23-073, filed 11/19/02, effective 1/1/03. Statutory Authority: RCW 49.17.010, 49.[17.]040, 49.[17.]050, and 49.[17.]060. Later promulgation, see chapter 296-833 WAC.

296-24-12505 What requirements apply to the water supply? [Statutory Authority: RCW 49.17.040. 98-24-096, § 296-24-12505, filed 12/1/98, effective 3/1/99; Order 73-5, § 296-24-12505, filed 5/9/73 and Order 73-4, § 296-24-12505, filed 5/7/73.] Repealed by 02-23-073, filed 11/19/02, effective 1/1/03. Statutory Authority: RCW 49.17.010, 49.[17.]040, 49.[17.]050, and 49.[17.]060. Later promulgation, see chapter 296-833 WAC.

296-24-12507 Must an employer provide toilet facilities for the camp? [Statutory Authority: RCW 49.17.040. 98-24-096, § 296-24-12507, filed 12/1/98, effective 3/1/99; Order 73-5, § 296-24-12507, filed 5/9/73 and Order 73-4, § 296-24-12507, filed 5/7/73.] Repealed by 02-23-073, filed 11/19/02, effective 1/1/03. Statutory Authority: RCW 49.17.010, 49.[17.]040, 49.[17.]050, and 49.[17.]060. Later promulgation, see chapter 296-833 WAC.

296-24-12509 Must sewer lines connect to public sewers? [Statutory Authority: RCW 49.17.040. 98-24-096, § 296-24-12509, filed 12/1/98, effective 3/1/99; Order 73-5, § 296-24-12509, filed 5/9/73 and Order 73-4, § 296-24-12509, filed 5/7/73.] Repealed by 02-23-073, filed 11/19/02, effective 1/1/03. Statutory Authority: RCW 49.17.010, 49.[17.]040, 49.[17.]050, and 49.[17.]060. Later promulgation, see chapter 296-833 WAC.

296-24-12511 What facilities must an employer provide for laundry, handwashing, and bathing? [Statutory Authority: RCW 49.17.040. 98-24-096, § 296-24-12511, filed 12/1/98, effective 3/1/99. Statutory Authority: Chapter 49.17 RCW. 94-15-096 (Order 94-07), § 296-24-12511, filed 7/20/94, effective 9/20/94; Order 73-5, § 296-24-12511, filed 5/9/73 and Order 73-4, § 296-24-12511, filed 5/7/73.] Repealed by 02-23-073, filed 11/19/02, effective 1/1/03. Statutory Authority: RCW 49.17.010, 49.[17.]040, 49.[17.]050, and 49.[17.]060. Later promulgation, see chapter 296-833 WAC.

296-24-12513 What lighting must an employer provide for camp buildings? [Statutory Authority: RCW 49.17.040. 98-24-096, § 296-24-12513, filed 12/1/98, effective 3/1/99; Order 73-5, § 296-24-12513, filed 5/9/73 and Order 73-4, § 296-24-12513, filed 5/7/73.] Repealed by 02-23-073, filed 11/19/02, effective 1/1/03. Statutory Authority: RCW 49.17.010, 49.[17.]040, 49.[17.]050, and 49.[17.]060. Later promulgation, see chapter 296-833 WAC.

296-24-12515 What requirements apply to refuse disposal? [Statutory Authority: RCW 49.17.040. 98-24-096, § 296-24-12515, filed 12/1/98, effective 3/1/99; Order 73-5, § 296-24-12515, filed 5/9/73 and Order 73-4, § 296-24-12515, filed 5/7/73.] Repealed by 02-23-073, filed 11/19/02, effective 1/1/03. Statutory Authority: RCW 49.17.010, 49.[17.]040, 49.[17.]050, and 49.[17.]060. Later promulgation, see chapter 296-833 WAC.

296-24-12517 What cooking and food-handling facilities must be provided in temporary labor camps? [Statutory Authority: RCW 49.17.040. 98-24-096, § 296-24-12517, filed 12/1/98, effective 3/1/99; Order 73-5, § 296-24-12517, filed 5/9/73 and Order 73-4, § 296-24-12517, filed 5/7/73.] Repealed by 02-23-073, filed 11/19/02, effective 1/1/03. Statutory Authority: RCW 49.17.010, 49.[17.]040, 49.[17.]050, and 49.[17.]060. Later promulgation, see chapter 296-833 WAC.

296-24-12519 Must an employer provide insect and rodent control? [Statutory Authority: RCW 49.17.040. 98-24-096, § 296-24-12519, filed 12/1/98, effective 3/1/99; Order 73-5, § 296-24-12519, filed 5/9/73 and Order 73-4, § 296-24-12519, filed 5/7/73.] Repealed by 02-23-073, filed 11/19/02, effective 1/1/03. Statutory Authority: RCW 49.17.010, 49.[17.]040, 49.[17.]050, and 49.[17.]060. Later promulgation, see chapter 296-833 WAC.

296-24-12521 What first-aid facilities must be available in the camp? [Statutory Authority: RCW 49.17.040. 98-24-096, § 296-24-12521, filed 12/1/98, effective 3/1/99; Order 73-5, § 296-24-12521, filed 5/9/73 and Order 73-4, § 296-24-12521, filed 5/7/73.] Repealed by 02-23-073, filed 11/19/02, effective 1/1/03. Statutory Authority: RCW 49.17.010, 49.[17.]040, 49.[17.]050, and 49.[17.]060. Later promulgation, see chapter 296-833 WAC.

296-24-12523 When must an employer report communicable diseases in a camp? [Statutory Authority: RCW 49.17.040. 98-24-096, § 296-24-12523, filed 12/1/98, effective 3/1/99; Order 73-5, § 296-24-12523, filed 5/9/73 and Order 73-4, § 296-24-12523, filed 5/7/73.] Repealed by 02-23-073, filed 11/19/02, effective 1/1/03. Statutory Authority: RCW 49.17.010, 49.[17.]040, 49.[17.]050, and 49.[17.]060. Later promulgation, see chapter 296-833 WAC.

296-24-130 Nonwater carriage disposal systems. [Order 73-5, § 296-24-130, filed 5/9/73 and Order 73-4, § 296-24-130, filed 5/7/73.] Repealed by 82-08-026 (Order 82-10), filed 3/30/82. Statutory Authority: RCW 49.17.040 And 49.17.050.

296-24-13001 Acceptable industrial disposal systems. [Order 73-5, § 296-24-13001, filed 5/9/73 and Order 73-4, § 296-24-13001, filed 5/7/73.] Repealed by 82-08-026 (Order 82-10), filed 3/30/82. Statutory Authority: RCW 49.17.040 and 49.17.050.

296-24-13003 Privy specifications. [Order 73-5, § 296-24-13003, filed 5/9/73 and Order 73-4, § 296-24-13003, filed 5/7/73.] Repealed by 82-08-026 (Order 82-10), filed 3/30/82. Statutory Authority: RCW 49.17.040 and 49.17.050.

296-24-13005 Chemical toilet specifications. [Order 73-5, § 296-24-13005, filed 5/9/73 and Order 73-4, § 296-24-13005, filed 5/7/73.] Repealed by 82-08-026 (Order 82-10), filed 3/30/82. Statutory Authority: RCW 49.17.040 and 49.17.050.

296-24-13007 Seepage pit construction. [Order 73-5, § 296-24-13007, filed 5/9/73 and Order 73-4, § 296-24-13007, filed 5/7/73.] Repealed by 82-08-026 (Order 82-10), filed 3/30/82. Statutory Authority: RCW 49.17.040 and 49.17.050.

296-24-13009 Combustion toilet. [Order 73-5, § 296-24-13009, filed 5/9/73 and Order 73-4, § 296-24-13009, filed 5/7/73.] Repealed by 82-08-026 (Order 82-10), filed 3/30/82. Statutory Authority: RCW 49.17.040 and 49.17.050.

296-24-13011 Recirculating toilet specifications. [Order 73-5, § 296-24-13011, filed 5/9/73 and Order 73-4, § 296-24-13011, filed 5/9/73.] Repealed by 82-08-026 (Order 82-10), filed 3/30/82. Statutory Authority: RCW 49.17.040 and 49.17.050.

296-24-13013 Portable toilet construction. [Order 73-5, § 296-24-13013, filed 5/9/73 and Order 73-4, § 296-24-13013, filed 5/7/73.] Repealed by 82-08-026 (Order 82-10), filed 3/30/82. Statutory Authority: RCW 49.17.040 and 49.17.050.

296-24-135 Safety color code for marking physical hazards. [Order 73-5, § 296-24-135, filed 5/9/73 and Order 73-4, § 296-24-135, filed 5/7/73.] Repealed by 04-18-080, filed 8/31/04, effective 11/1/04. Statutory Authority: RCW 49.17.010, 49.17.040, 49.17.050, 49.17.060.

296-24-13501 Color identification. [Statutory Authority: RCW 49.17.010, [49.17].050 and [49.17].060. 95-22-015, § 296-24-13501, filed 10/20/95, effective 1/16/96. Statutory Authority: RCW 49.17.040 and 49.17.050. 82-13-045 (Order 82-22), § 296-24-13501, filed 6/11/82; Order 73-5, § 296-24-13501, filed 5/9/73 and Order 73-4, § 296-24-13501, filed 5/7/73.] Repealed by 04-18-080, filed 8/31/04, effective 11/1/04. Statutory Authority: RCW 49.17.010, 49.17.040, 49.17.050, 49.17.060.

296-24-13503 Color specifications. [Order 73-5, § 296-24-13503, filed 5/9/73 and Order 73-4, § 296-24-13503, filed 5/7/73.] Repealed by 83-15-017 (Order 83-19), filed 7/13/83, effective 9/12/83. Statutory Authority: RCW 49.17.040 and 49.17.050.

296-24-140 Specifications for accident prevention signs and tags. [Order 73-5, § 296-24-140, filed 5/9/73 and Order 73-4, § 296-24-140, filed 5/7/73.] Repealed by 04-18-080, filed 8/31/04, effective 11/1/04. Statutory Authority: RCW 49.17.010, 49.17.040, 49.17.050, 49.17.060.

296-24-14001 Scope. [Statutory Authority: RCW 49.17.010, [49.17].040, [49.17].050. 02-12-098, § 296-24-14001, filed 6/5/02, effective 8/1/02; Order 76-6, § 296-24-14001, filed 3/1/76; Order 73-5, § 296-24-14001, filed 5/9/73 and Order 73-4, § 296-24-14001, filed 5/7/73.] Repealed by 04-18-080, filed 8/31/04, effective 11/1/04. Statutory Authority: RCW 49.17.010, 49.17.040, 49.17.050, 49.17.060.

296-24-14003 Definitions. [Order 73-5, § 296-24-14003, filed 5/9/73 and Order 73-4, § 296-24-14003, filed 5/7/73.] Repealed by 04-18-080, filed 8/31/04, effective 11/1/04. Statutory Authority: RCW 49.17.010, 49.17.040, 49.17.050, 49.17.060.

296-24-14005 Classification of signs according to use. [Order 73-5, § 296-24-14005, filed 5/9/73 and Order 73-4, § 296-24-14005, filed 5/7/73.] Repealed by 04-18-080, filed 8/31/04, effective 11/1/04. Statutory Authority: RCW 49.17.010, 49.17.040, 49.17.050, 49.17.060.

296-24-14007 Sign design and colors. [Statutory Authority: RCW 49.17.010, [49.17].040, and [49.17].050. 01-11-038, § 296-24-14007, filed 5/9/01, effective 9/1/01. Statutory Authority: RCW 49.17.040 and 49.17.050. 82-13-045 (Order 82-22), § 296-24-14007, filed 6/11/82; Order 73-5, § 296-24-14007, filed 5/9/73 and Order 73-4, § 296-24-14007, filed 5/7/73.] Repealed by 04-18-080, filed 8/31/04, effective 11/1/04. Statutory Authority: RCW 49.17.010, 49.17.040, 49.17.050, 49.17.060.

296-24-14009 Sign wordings. [Statutory Authority: Chapter 49.17 RCW. 94-15-096 (Order 94-07), § 296-24-14009, filed 7/20/94, effective 9/20/94; Order 73-5, § 296-24-14009, filed 5/9/73 and Order 73-4, § 296-24-14009, filed 5/7/73.] Repealed by 04-18-080, filed 8/31/04, effective 11/1/04. Statutory Authority: RCW 49.17.010, 49.17.040, 49.17.050, 49.17.060.

296-24-14011 Accident prevention tags. [Statutory Authority: RCW 49.17.010, [49.17].050 and [49.17].060. 95-22-015, § 296-24-14011, filed 10/20/95, effective 1/16/96. Statutory Authority: Chapter 49.17 RCW. 94-15-096 (Order 94-07), § 296-24-14011, filed 7/20/94, effective 9/20/94; 94-06-068 (Order 93-17), § 296-24-14011, filed 3/2/94, effective 3/1/95. Statutory Authority: RCW 49.17.050(2) and 49.14.040 [49.17.040]. 87-07-022 (Order 87-01), § 296-24-14011, filed 3/12/87; Order 76-6, § 296-24-14011, filed 3/1/76; Order 73-5, § 296-24-14011, filed 5/9/73 and Order 73-4, § 296-24-14011, filed 5/7/73.] Repealed by 04-18-080, filed 8/31/04, effective 11/1/04. Statutory Authority: RCW 49.17.010, 49.17.040, 49.17.050, 49.17.060.

296-24-145 Window washing. [Order 73-5, § 296-24-145, filed 5/9/73 and Order 73-4, § 296-24-145, filed 5/7/73.] Repealed by 02-22-027, filed 10/28/02, effective 1/1/03. Statutory Authority: RCW 49.17.010, 49.17.040, 49.17.050, and 49.17.060. Later promulgation, see chapter 296-878 WAC.

296-24-14501 Definitions. [Order 73-5, § 296-24-14501, filed 5/9/73 and Order 73-4, § 296-24-14501, filed 5/7/73.] Repealed by 02-22-027, filed 10/28/02, effective 1/1/03. Statutory Authority: RCW 49.17.010, 49.17.040, 49.17.050, and 49.17.060. Later promulgation, see chapter 296-878 WAC.

296-24-14503 Application. [Order 73-5, § 296-24-14503, filed 5/9/73 and Order 73-4, § 296-24-14503, filed 5/7/73.] Repealed by 02-22-027, filed 10/28/02, effective 1/1/03. Statutory Authority: RCW 49.17.010, 49.17.040, 49.17.050, and 49.17.060. Later promulgation, see chapter 296-878 WAC.

296-24-14505 Protection of persons engaged at window cleaning. [Order 73-5, § 296-24-14505, filed 5/9/73 and Order 73-4, § 296-24-14505, filed 5/7/73.] Repealed by 02-22-027, filed 10/28/02, effective 1/1/03. Statutory Authority: RCW 49.17.010, 49.17.040, 49.17.050, and 49.17.060. Later promulgation, see chapter 296-878 WAC.

296-24-14507 General. [Statutory Authority: Chapter 49.17 RCW. 94-15-096 (Order 94-07), § 296-24-14507, filed 7/20/94, effective 9/20/94; Order 73-5, § 296-24-14507, filed 5/9/73 and Order 73-4, § 296-24-14507, filed 5/7/73.] Repealed by 02-22-027, filed 10/28/02, effective 1/1/03. Statutory Authority: RCW 49.17.010, 49.17.040, 49.17.050, and 49.17.060. Later promulgation, see chapter 296-878 WAC.

296-24-14509 Belt terminals, anchors and bolts. [Statutory Authority: Chapter 49.17 RCW. 94-15-096 (Order 94-07), § 296-24-14509, filed 7/20/94, effective 9/20/94; Order 73-5, § 296-24-14509, filed 5/9/73 and Order 73-4, § 296-24-14509 filed 5/7/73.] Repealed by 02-22-027, filed 10/28/02, effective 1/1/03. Statutory Authority: RCW 49.17.010, 49.17.040, 49.17.050, and 49.17.060. Later promulgation, see chapter 296-878 WAC.

296-24-14511 Belts. [Order 73-5, § 296-24-14511, filed 5/9/73 and Order 73-4, § 296-24-14511, filed 5/7/73.] Repealed by 02-22-027, filed 10/28/02, effective 1/1/03. Statutory Authority: RCW 49.17.010, 49.17.040, 49.17.050, and 49.17.060. Later promulgation, see chapter 296-878 WAC.

296-24-14513 Anchor installations. [Statutory Authority: Chapter 49.17 RCW. 94-15-096 (Order 94-07), § 296-24-14513, filed 7/20/94, effective 9/20/94; Order 73-5, § 296-24-14513, filed 5/9/73 and Order 73-4, § 296-24-14513, filed 5/7/73.] Repealed by 02-22-027, filed 10/28/02, effective 1/1/03. Statutory Authority: RCW 49.17.010, 49.17.040, 49.17.050, and 49.17.060. Later promulgation, see chapter 296-878 WAC.

296-24-14515 Reversible and pivot windows. [Statutory Authority: Chapter 49.17 RCW. 94-15-096 (Order 94-07), § 296-24-14515, filed 7/20/94, effective 9/20/94; Order 73-5, § 296-24-14515, filed 5/9/73 and Order 73-4, § 296-24-14515, filed 5/7/73.] Repealed by 02-22-027, filed 10/28/02, effective 1/1/03. Statutory Authority: RCW 49.17.010, 49.17.040, 49.17.050, and 49.17.060. Later promulgation, see chapter 296-878 WAC.

296-24-14517 Ladders. [Order 73-5, § 296-24-14517, filed 5/9/73 and Order 73-4, § 296-24-14517, filed 5/7/73.] Repealed by 02-22-027, filed 10/28/02, effective 1/1/03. Statutory Authority: RCW 49.17.010, 49.17.040, 49.17.050, and 49.17.060. Later promulgation, see chapter 296-878 WAC.

296-24-14519 Boatswain's chairs. [Statutory Authority: RCW 49.17.-010, [49.17].040, and [49.17].050. 00-08-078, § 296-24-14519, filed 4/4/00, effective 7/1/00. Statutory Authority: Chapter 49.17 RCW. 94-15-096 (Order 94-07), § 296-24-14519, filed 7/20/94, effective 9/20/94; Order 73-5, § 296-24-14519, filed 5/9/73 and Order 73-4, § 296-24-14519, filed 5/7/73.] Repealed by 02-22-027, filed 10/28/02, effective 1/1/03. Statutory Authority: RCW 49.17.010, 49.17.040, 49.17.050, and 49.17.060. Later promulgation, see chapter 296-878 WAC.

296-24-150 Machinery and machine guarding—General requirements for all machines—Scope and application. [Statutory Authority: Chapter 49.17 RCW. 91-03-044 (Order 90-18), § 296-24-150, filed 1/10/91, effective 2/12/91; 89-11-035 (Order 89-03), § 296-24-150, filed 5/15/89, effective 6/30/89; Order 74-27, § 296-24-150, filed 5/7/74; Order 73-5, § 296-24-150, filed 5/9/73 and Order 73-4, § 296-24-150, filed 5/7/73.] Repealed by 04-14-028, filed 6/29/04, effective 1/1/05. Statutory Authority: RCW 49.17.010, 49.17.040, 49.17.050, and 49.17.060.

296-24-15001 Machine guarding. [Statutory Authority: Chapter 49.17 RCW. 94-15-096 (Order 94-07), § 296-24-15001, filed 7/20/94, effective 9/20/94; 91-03-044 (Order 90-18), § 296-24-15001, filed 1/10/91, effective 2/12/91; 90-03-029 (Order 89-20), § 296-24-15001, filed 1/11/90, effective 2/26/90; 89-11-035 (Order 89-03), § 296-24-15001, filed 5/15/89, effective 6/30/89; Order 74-27, § 296-24-15001, filed 5/7/74; Order 73-5, § 296-24-15001, filed 5/9/73 and Order 73-4, § 296-24-15001, filed 5/7/73.] Repealed by 04-14-028, filed 6/29/04, effective 1/1/05. Statutory Authority: RCW 49.17.010, 49.17.040, 49.17.050, and 49.17.060.

296-24-15003 Anchoring fixed machinery. [Statutory Authority: Chapter 49.17 RCW. 91-03-044 (Order 90-18), § 296-24-15003, filed 1/10/91, effective 2/12/91; Order 73-5, § 296-24-15003, filed 5/9/73 and Order 73-4, § 296-24-15003, filed 5/7/73.] Repealed by 04-14-028, filed 6/29/04, effective 1/1/05. Statutory Authority: RCW 49.17.010, 49.17.040, 49.17.050, and 49.17.060.

296-24-15005 Means to prevent slipping. [Statutory Authority: Chapter 49.17 RCW. 94-15-096 (Order 94-07), § 296-24-15005, filed 7/20/94, effective 9/20/94; Order 73-5, § 296-24-15005, filed 5/9/73 and Order 73-4, § 296-24-15005, filed 5/7/73.] Repealed by 04-14-028, filed 6/29/04, effective 1/1/05. Statutory Authority: RCW 49.17.010, 49.17.040, 49.17.050, and 49.17.060.

296-24-15007 Machines shall be stopped when making repairs. [Order 74-27, § 296-24-15007, filed 5/7/74.] Repealed by 04-14-028, filed 6/29/04, effective 1/1/05. Statutory Authority: RCW 49.17.010, 49.17.040, 49.17.050, and 49.17.060.

296-24-15009 Counterweights. [Order 74-27, § 296-24-15009, filed 5/7/74.] Repealed by 04-14-028, filed 6/29/04, effective 1/1/05. Statutory Authority: RCW 49.17.010, 49.17.040, 49.17.050, and 49.17.060.

296-24-165 Fixed and portable power tool requirements. [Statutory Authority: Chapter 49.17 RCW. 91-24-017 (Order 91-07), § 296-24-165, filed 11/22/91, effective 12/24/91. Statutory Authority: RCW 49.17.040 and 49.17.050. 83-15-017 (Order 83-19), § 296-24-165, filed 7/13/83, effective 9/12/83; Order 76-6, § 296-24-165, filed 3/1/76; Order 73-5, § 296-24-165, filed 5/9/73 and Order 73-4, § 296-24-165, filed 5/7/73.] Repealed by 04-14-028, filed 6/29/04, effective 1/1/05. Statutory Authority: RCW 49.17.010, 49.17.040, 49.17.050, and 49.17.060.

296-24-16501 Definitions. [Order 73-5, § 296-24-16501, filed 5/9/73 and Order 73-4, § 296-24-16501, filed 5/7/73.] Repealed by 04-14-028, filed 6/29/04, effective 1/1/05. Statutory Authority: RCW 49.17.010, 49.17.040, 49.17.050, and 49.17.060.

296-24-16503 Machine construction general. [Statutory Authority: Chapter 49.17 RCW. 89-11-035 (Order 89-03), § 296-24-16503, filed 5/15/89, effective 6/30/89. Statutory Authority: RCW 49.17.040 and 49.17.050. 83-15-017 (Order 83-19), § 296-24-16503, filed 7/13/83, effective 9/12/83; 82-13-045 (Order 82-22), § 296-24-16503, filed 6/11/82; Order 73-5, § 296-24-16503, filed 5/9/73 and Order 73-4, § 296-24-16503, filed 5/7/73.] Repealed by 04-14-028, filed 6/29/04, effective 1/1/05. Statutory Authority: RCW 49.17.010, 49.17.040, 49.17.050, and 49.17.060.

296-24-16505 Machine controls and equipment. [Statutory Authority: Chapter 49.17 RCW. 94-15-096 (Order 94-07), § 296-24-16505, filed 7/20/94, effective 9/20/94; Order 73-5, § 296-24-16505, filed 5/9/73 and Order 73-4, § 296-24-16505, filed 5/7/73.] Repealed by 04-14-028, filed 6/29/04, effective 1/1/05. Statutory Authority: RCW 49.17.010, 49.17.040, 49.17.050, and 49.17.060.

296-24-16507 Hand-fed ripsaws. [Statutory Authority: Chapter 49.17 RCW. 90-03-029 (Order 89-20), § 296-24-16507, filed 1/11/90, effective 2/26/90; Order 73-5, § 296-24-16507, filed 5/9/73 and Order 73-4, § 296-24-16507, filed 5/7/73.] Repealed by 04-14-028, filed 6/29/04, effective 1/1/05. Statutory Authority: RCW 49.17.010, 49.17.-040, 49.17.050, and 49.17.060.

296-24-16509 Hand-fed crosscut table saws. [Order 73-5, § 296-24-16509, filed 5/9/73 and Order 73-4, § 296-24-16509, filed 5/7/73.] Repealed by 04-14-028, filed 6/29/04, effective 1/1/05. Statutory Authority: RCW 49.17.010, 49.17.040, 49.17.050, and 49.17.060.

296-24-16511 Circular resaws. [Order 73-5, § 296-24-16511, filed 5/9/73 and Order 73-4, § 296-24-16511, filed 5/7/73.] Repealed by 04-14-028, filed 6/29/04, effective 1/1/05. Statutory Authority: RCW 49.17.010, 49.17.040, 49.17.050, and 49.17.060.

296-24-16513 Self-feed circular saws. [Statutory Authority: RCW 49.17.040 and 49.17.050. 83-15-017 (Order 83-19), § 296-24-16513, filed 7/13/83, effective 9/12/83; Order 73-5, § 296-24-16513, filed 5/9/73 and Order 73-4, § 296-24-16513, filed 5/7/73.] Repealed by 04-14-028, filed 6/29/04, effective 1/1/05. Statutory Authority: RCW 49.17.010, 49.17.040, 49.17.050, and 49.17.060.

296-24-16515 Swing cutoff saws. [Statutory Authority: Chapter 49.17 RCW. 90-03-029 (Order 89-20), § 296-24-16515, filed 1/11/90, effective 2/26/90; Order 73-5, § 296-24-16515, filed 5/9/73 and Order 73-4, § 296-24-16515, filed 5/7/73.] Repealed by 04-14-028, filed 6/29/04, effective 1/1/05. Statutory Authority: RCW 49.17.010, 49.17.040, 49.17.050, and 49.17.060.

296-24-16517 Radial saws. [Statutory Authority: Chapter 49.17 RCW. 90-03-029 (Order 89-20), § 296-24-16517, filed 1/11/90, effective 2/26/90; 89-11-035 (Order 89-03), § 296-24-16517, filed 5/15/89, effective 6/30/89; Order 73-5, § 296-24-16517, filed 5/9/73 and Order 73-4, § 296-24-16517, filed 5/7/73.] Repealed by 04-14-028, filed 6/29/04, effective 1/1/05. Statutory Authority: RCW 49.17.010, 49.17.040, 49.17.050, and 49.17.060.

296-24-16519 Bandsaws and band resaws. [Order 73-5, § 296-24-16519, filed 5/9/73 and Order 73-4, § 296-24-16519, filed 5/7/73.] Repealed by 04-14-028, filed 6/29/04, effective 1/1/05. Statutory Authority: RCW 49.17.010, 49.17.040, 49.17.050, and 49.17.060.

296-24-16521 Jointers. [Statutory Authority: RCW 49.17.040 and 49.17.050. 83-15-017 (Order 83-19), § 296-24-16521, filed 7/13/83, effective 9/12/83; Order 73-5, § 296-24-16521, filed 5/9/73 and Order 73-4, § 296-24-16521, filed 5/7/73.] Repealed by 04-14-028, filed 6/29/04, effective 1/1/05. Statutory Authority: RCW 49.17.010, 49.17.040, 49.17.050, and 49.17.060.

296-24-16523 Tenoning machines. [Order 76-6, § 296-24-16523, filed 3/1/76; Order 73-5, § 296-24-16523, filed 5/9/73 and Order 73-4, § 296-24-16523, filed 5/7/73.] Repealed by 04-14-028, filed 6/29/04, effective 1/1/05. Statutory Authority: RCW 49.17.010, 49.17.040, 49.17.050, and 49.17.060.

296-24-16525 Boring and mortising machines. [Order 73-5, § 296-24-16525, filed 5/9/73 and Order 73-4, § 296-24-16525, filed 5/7/73.] Repealed by 04-14-028, filed 6/29/04, effective 1/1/05. Statutory Authority: RCW 49.17.010, 49.17.040, 49.17.050, and 49.17.060.

296-24-16527 Shapers and similar equipment. [Statutory Authority: RCW 49.17.040 and 49.17.050. 83-15-017 (Order 83-19), § 296-24-16527, filed 7/13/83, effective 9/12/83; Order 73-5, § 296-24-16527, filed 5/9/73 and Order 73-4, § 296-24-16527, filed 5/7/73.] Repealed by 04-14-028, filed 6/29/04, effective 1/1/05. Statutory Authority: RCW 49.17.010, 49.17.040, 49.17.050, and 49.17.060.

296-24-16529 Planing, molding, sticking, and matching machines. [Order 73-5, § 296-24-16529, filed 5/9/73 and Order 73-4, § 296-24-16529, filed 5/7/73.] Repealed by 04-14-028, filed 6/29/04, effective 1/1/05. Statutory Authority: RCW 49.17.010, 49.17.040, 49.17.050, and 49.17.060.

296-24-16531 Profile and swing-head lathes and heel turning machine. [Statutory Authority: Chapter 49.17 RCW. 91-03-044 (Order 90-18), § 296-24-16531, filed 1/10/91, effective 2/12/91. Statutory Authority: RCW 49.17.040 and 49.17.050. 83-15-017 (Order 83-19), § 296-24-16531, filed 7/13/83, effective 9/12/83; Order 73-5, § 296-24-16531, filed 5/9/73 and Order 73-4, § 296-24-16531, filed 5/7/73.] Repealed by 04-14-028, filed 6/29/04, effective 1/1/05. Statutory Authority: RCW 49.17.010, 49.17.040, 49.17.050, and 49.17.060.

296-24-16533 Sanding machines. [Order 73-5, § 296-24-16533, filed 5/9/73 and Order 73-4, § 296-24-16533, filed 5/7/73.] Repealed by 04-14-028, filed 6/29/04, effective 1/1/05. Statutory Authority: RCW 49.17.010, 49.17.040, 49.17.050, and 49.17.060.

296-24-16535 Veneer cutters and wringers. [Order 73-5, § 296-24-16535, filed 5/9/73 and Order 73-4, § 296-24-16535, filed 5/7/73.] Repealed by 04-14-028, filed 6/29/04, effective 1/1/05. Statutory Authority: RCW 49.17.010, 49.17.040, 49.17.050, and 49.17.060.

296-24-16537 Miscellaneous machines. [Statutory Authority: RCW 49.17.040 and 49.17.050. 83-15-017 (Order 83-19), § 296-24-16537, filed 7/13/83, effective 9/12/83; Order 73-5, § 296-24-16537, filed 5/9/73 and Order 73-4, § 296-24-16537, filed 5/7/73.] Repealed by 04-14-028, filed 6/29/04, effective 1/1/05. Statutory Authority: RCW 49.17.010, 49.17.040, 49.17.050, and 49.17.060.

296-24-16539 Inspection and maintenance of machinery. [Statutory Authority: Chapter 49.17 RCW. 94-15-096 (Order 94-07), § 296-24-16539, filed 7/20/94, effective 9/20/94. Statutory Authority: RCW 49.17.040 and 49.17.050. 83-15-017 (Order 83-19), § 296-24-16539, filed 7/13/83, effective 9/12/83; 82-13-045 (Order 82-22), § 296-24-16539, filed 6/11/82; Order 73-5, § 296-24-16539, filed 5/9/73 and Order 73-4, § 296-24-16539, filed 5/7/73.] Repealed by 04-14-028, filed 6/29/04, effective 1/1/05. Statutory Authority: RCW 49.17.010, 49.17.040, 49.17.050, and 49.17.060.

296-24-170 Cooperage machinery. [Order 73-5, § 296-24-170, filed 5/9/73 and Order 73-4, § 296-24-170, filed 5/7/73.] Repealed by 82-13-045 (Order 82-22), filed 6/11/82. Statutory Authority: RCW 49.17.040 and 49.17.050.

296-24-17001 Definitions. [Order 73-5, § 296-24-17001, filed 5/9/73 and Order 73-4, § 296-24-17001, filed 5/7/73.]

Repealed by 82-13-045 (Order 82-22), filed 6/11/82. Statutory Authority: RCW 49.17.040 and 49.17.050.

296-24-17003 Heading bolt sawing machine. [Order 73-5, § 296-24-17003, filed 5/9/73 and Order 73-4, § 296-24-17003, filed 5/7/73.] Repealed by 82-13-045 (Order 82-22), filed 6/11/82. Statutory Authority: RCW 49.17.040 and 49.17.050.

296-24-17005 Bolt, equalizer, stave, and heading saws (tilting table style). [Order 73-5, § 296-24-17005, filed 5/9/73 and Order 73-4, § 296-24-17005, filed 5/7/73.] Repealed by 82-13-045 (Order 82-22), filed 6/11/82. Statutory Authority: RCW 49.17.040 and 49.17.050.

296-24-17007 Barrel stave saws (cylindrical saws). [Order 73-5, § 296-24-17007, filed 5/9/73 and Order 73-4, § 296-24-17007, filed 5/7/73.] Repealed by 82-13-045 (Order 82-22), filed 6/11/82. Statutory Authority: RCW 49.17.040 and 49.17.050.

296-24-17009 Hand-fed ripsaws. [Order 73-5, § 296-24-17009, filed 5/9/73 and Order 73-4, § 296-24-17009, filed 5/7/73.] Repealed by 82-13-045 (Order 82-22), filed 6/11/82. Statutory Authority: RCW 49.17.040 and 49.17.050.

296-24-17011 Self-feed stave and heading equalizer saws. [Order 73-5, § 296-24-17011, filed 5/9/73 and Order 73-4, § 296-24-17011, filed 5/7/73.] Repealed by 82-13-045 (Order 82-22), filed 6/11/82. Statutory Authority: RCW 49.17.040 and 49.17.050.

296-24-17013 Stave and heading planers (single and double heads). [Order 73-5, § 296-24-17013, filed 5/9/73 and Order 73-4, § 296-24-17013, filed 5/7/73.] Repealed by 82-13-045 (Order 82-22), filed 6/11/82. Statutory Authority: RCW 49.17.040 and 49.17.050.

296-24-17015 Stave jointing machines (wheel). [Order 73-5, § 296-24-17015, filed 5/9/73 and Order 73-4, § 296-24-17015, filed 5/7/73.] Repealed by 82-13-045 (Order 82-22), filed 6/11/82. Statutory Authority: RCW 49.17.040 and 49.17.050.

296-24-17017 Heading jointer and doweler machine (wheel). [Order 73-5, § 296-24-17017, filed 5/9/73 and Order 73-4, § 296-24-17017, filed 5/7/73.] Repealed by 82-13-045 (Order 82-22), filed 6/11/82. Statutory Authority: RCW 49.17.040 and 49.17.050.

296-24-17019 Heading rounder. [Order 73-5, § 296-24-17019, filed 5/9/73 and Order 73-4, § 296-24-17019, filed 5/7/73.] Repealed by 82-13-045 (Order 82-22), filed 6/11/82. Statutory Authority: RCW 49.17.040 and 49.17.050.

296-24-17021 Power windlass machine. [Order 73-5, § 296-24-17021, filed 5/9/73 and Order 73-4, § 296-24-17021, filed 5/7/73.] Repealed by 82-13-045 (Order 82-22), filed 6/11/82. Statutory Authority: RCW 49.17.040 and 49.17.050.

296-24-17023 Crozing machine (stationary heads). [Order 73-5, § 296-24-17023, filed 5/9/73 and Order 73-4, § 296-24-17023, filed 5/7/73.] Repealed by 82-13-045 (Order 82-22), filed 6/11/82. Statutory Authority: RCW 49.17.040 and 49.17.050.

296-24-17025 Heading-up machine. [Order 73-5, § 296-24-17025, filed 5/9/73 and Order 73-4, § 296-24-17025, filed 5/7/73.] Repealed by 82-13-045 (Order 82-22), filed 6/11/82. Statutory Authority: RCW 49.17.040 and 49.17.050.

296-24-17027 Head charring machine. [Order 73-5, § 296-24-17027, filed 5/9/73 and Order 73-4, § 296-24-17027, filed 5/7/73.] Repealed by 82-13-045 (Order 82-22), filed 6/11/82. Statutory Authority: RCW 49.17.040 and 49.17.050.

296-24-17029 Bilge truss hoop ring removing machine. [Order 73-5, § 296-24-17029, filed 5/9/73 and Order 73-4, § 296-24-17029, filed 5/7/73.] Repealed by 82-13-045 (Order 82-22), filed 6/11/82. Statutory Authority: RCW 49.17.-040 and 49.17.050.

296-24-17031 Hoop elevators and conveyors. [Order 73-5, § 296-24-17031, filed 5/9/73 and Order 73-4, § 296-24-17031, filed 5/7/73.] Repealed by 82-13-045 (Order 82-22), filed 6/11/82. Statutory Authority: RCW 49.17.040 and 49.17.050.

296-24-17033 Barrel sanding machine. [Order 73-5, § 296-24-17033, filed 5/9/73 and Order 73-4, § 296-24-17033, filed 5/7/73.] Repealed by 82-13-045 (Order 82-22), filed 6/11/82. Statutory Authority: RCW 49.17.040 and 49.17.050.

296-24-17035 Hoop drivers and trussers. [Order 73-5, § 296-24-17035, filed 5/9/73 and Order 73-4, § 296-24-17035, filed 5/7/73.] Repealed by 82-13-045 (Order 82-22), filed 6/11/82. Statutory Authority: RCW 49.17.040 and 49.17.050.

296-24-17037 Head sanding machine. [Order 73-5, § 296-24-17037, filed 5/9/73 and Order 73-4, § 296-24-17037, filed 5/7/73.] Repealed by 82-13-045 (Order 82-22), filed 6/11/82. Statutory Authority: RCW 49.17.040 and 49.17.050.

296-24-17039 Hand jointer. [Order 73-5, § 296-24-17039, filed 5/9/73 and Order 73-4, § 296-24-17039, filed 5/7/73.] Repealed by 82-13-045 (Order 82-22), filed 6/11/82. Statutory Authority: RCW 49.17.040 and 49.17.050.

296-24-17041 Hoop punching and coiling machine. [Order 73-5, § 296-24-17041, filed 5/9/73 and Order 73-4, § 296-24-17041, filed 5/7/73.] Repealed by 82-13-045 (Order 82-22), filed 6/11/82. Statutory Authority: RCW 49.17.040 and 49.17.050.

296-24-17043 Hoop riveting machine. [Order 73-5, § 296-24-17043, filed 5/9/73 and Order 73-4, § 296-24-17043, filed 5/7/73.] Repealed by 82-13-045 (Order 82-22), filed 6/11/82. Statutory Authority: RCW 49.17.040 and 49.17.050.

296-24-17045 Hoop flaring and expanding machine. [Order 73-5, § 296-24-17045, filed 5/9/73 and Order 73-4, § 296-24-17045, filed 5/7/73.] Repealed by 82-13-045 (Order 82-22), filed 6/11/82. Statutory Authority: RCW 49.17.040 and 49.17.050.

296-24-17047 Inspection and maintenance of cooperage machinery. [Order 73-5, § 296-24-17047, filed 5/9/73 and order 73-4, § 296-24-17047, filed 5/7/73.] Repealed by 82-13-045 (order 82-22), filed 6/11/82. Statutory Authority: RCW 49.17.040 and 49.17.050.

296-24-180 Abrasive wheel machinery. [Order 73-5, § 296-24-180, filed 5/9/73 and Order 73-4, § 296-24-180, filed 5/7/73.] Repealed by 04-14-028, filed 6/29/04, effective 1/1/05. Statutory Authority: RCW 49.17.010, 49.17.040, 49.17.050, and 49.17.060.

296-24-18001 Definitions. [Order 73-5, § 296-24-18001, filed 5/9/73 and Order 73-4, § 296-24-18001, filed 5/7/73.] Repealed by 04-14-028, filed 6/29/04, effective 1/1/05. Statutory Authority: RCW 49.17.010, 49.17.040, 49.17.050, and 49.17.060.

296-24-18003 General requirements. [Order 73-5, § 296-24-18003, filed 5/9/73; Order 73-4, § 296-24-18003, filed 5/7/73.] Repealed by 04-14-028, filed 6/29/04, effective 1/1/05. Statutory Authority: RCW 49.17.010, 49.17.040, 49.17.050, and 49.17.060.

296-24-18005 Guarding of abrasive wheel machinery. [Statutory Authority: RCW 49.17.010, [49.17].040 and [49.17].-050. 98-02-028, § 296-24-18005, filed 12/31/97, effective 1/31/98; Order 76-6, § 296-24-18005, filed 3/1/76; Order 73-5, § 296-24-18005, filed 5/9/73 and Order 73-4, § 296-24-18005, filed 5/7/73.] Repealed by 04-14-028, filed 6/29/04, effective 1/1/05. Statutory Authority: RCW 49.17.010, 49.17.040, 49.17.050, and 49.17.060.

296-24-18007 Flanges. [Order 73-5, § 296-24-18007, filed 5/9/73 and Order 73-4, § 296-24-18007, filed 5/7/73.] Repealed by 04-14-028, filed 6/29/04, effective 1/1/05. Statutory Authority: RCW 49.17.010, 49.17.040, 49.17.050, and 49.17.060.

296-24-18009 Mounting. [Order 73-5, § 296-24-18009, filed 5/9/73 and Order 73-4, § 296-24-18009, filed 5/7/73.] Repealed by 04-14-028, filed 6/29/04, effective 1/1/05. Statutory Authority: RCW 49.17.010, 49.17.040, 49.17.050, and 49.17.060.

296-24-190 Mills and calenders in the rubber and plastics industries. [Order 73-5, § 296-24-190, filed 5/9/73 and Order 73-4, § 296-24-190, filed 5/7/73.] Repealed by 04-14-028, filed 6/29/04, effective 1/1/05. Statutory Authority: RCW 49.17.010, 49.17.040, 49.17.050, and 49.17.060.

296-24-19001 Definitions. [Order 73-5, § 296-24-19001, filed 5/9/73 and Order 73-4, § 296-24-19001, filed 5/7/73.] Repealed by 04-14-028, filed 6/29/04, effective 1/1/05. Statutory Authority: RCW 49.17.010, 49.17.040, 49.17.050, and 49.17.060.

296-24-19003 General requirements. [Statutory Authority: Chapter 49.17 RCW. 91-24-017 (Order 91-07), § 296-24-19003, filed 11/22/91, effective 12/24/91. Statutory Authority: RCW 49.17.040 and 49.17.050. 85-10-004 (Order 85-09), § 296-24-19003, filed 4/19/85; Order 76-6, § 296-24-19003, filed 3/1/76; Order 73-5, § 296-24-19003, filed 5/9/73 and Order 73-4, § 296-24-19003, filed 5/7/73.] Repealed by 04-14-028, filed 6/29/04, effective 1/1/05. Statutory Authority: RCW 49.17.010, 49.17.040, 49.17.050, and 49.17.060.

296-24-19005 Mill safety controls. [Order 73-5, § 296-24-19005, filed 5/9/73 and Order 73-4, § 296-24-19005, filed 5/7/73.] Repealed by 04-14-028, filed 6/29/04, effective 1/1/05. Statutory Authority: RCW 49.17.010, 49.17.040, 49.17.050, and 49.17.060.

296-24-19007 Calender safety controls. [Order 73-5, § 296-24-19007, filed 5/9/73 and Order 73-4, § 296-24-19007, filed 5/7/73.] Repealed by 04-14-028, filed 6/29/04, effective 1/1/05. Statutory Authority: RCW 49.17.010, 49.17.040, 49.17.050, and 49.17.060.

296-24-19009 Protection by location. [Order 73-5, § 296-24-19009, filed 5/9/73 and Order 73-4, § 296-24-19009, filed 5/7/73.] Repealed by 04-14-028, filed 6/29/04, effective 1/1/05. Statutory Authority: RCW 49.17.010, 49.17.040, 49.17.050, and 49.17.060.

296-24-19011 Trip and emergency switches. [Order 73-5, § 296-24-19011, filed 5/9/73 and Order 73-4, § 296-24-19011, filed 5/7/73.] Repealed by 04-14-028, filed 6/29/04, effective 1/1/05. Statutory Authority: RCW 49.17.010, 49.17.040, 49.17.050, and 49.17.060.

296-24-19013 Stopping limits. [Order 73-5, § 296-24-19013, filed 5/9/73 and Order 73-4, § 296-24-19013, filed 5/7/73.] Repealed by 04-14-028, filed 6/29/04, effective 1/1/05. Statutory Authority: RCW 49.17.010, 49.17.040, 49.17.050, and 49.17.060.

296-24-19015 Alarm. [Order 73-5, § 296-24-19015, filed 5/9/73 and Order 73-4, § 296-24-19015, filed 5/7/73.] Repealed by 04-14-028, filed 6/29/04, effective 1/1/05. Statutory Authority: RCW 49.17.010, 49.17.040, 49.17.050, and 49.17.060.

296-24-195 Mechanical power presses. [Statutory Authority: Chapter 49.17 RCW. 89-11-035 (Order 89-03), § 296-24-195, filed 5/15/89, effective 6/30/89; Order 76-6, § 296-24-195, filed 3/1/76; Order 73-5, § 296-24-195, filed 5/9/73 and Order 73-4, § 296-24-195, filed 5/7/73.] Repealed by 04-14-028, filed 6/29/04, effective 1/1/05. Statutory Authority: RCW 49.17.010, 49.17.040, 49.17.050, and 49.17.060.

296-24-19501 Definitions. [Statutory Authority: RCW 49.17.040, [49.17].050 and [49.17].060. 95-17-036, § 296-24-19501, filed 8/9/95, effective 9/25/95. Statutory Authority: Chapter 49.17 RCW. 94-15-096 (Order 94-07), § 296-24-19501, filed 7/20/94, effective 9/20/94; 88-23-054 (Order 88-25), § 296-24-19501, filed 11/14/88; Order 76-6, § 296-24-19501, filed 3/1/76; Order 73-5, § 296-24-19501, filed 5/9/73 and Order 73-4, § 296-24-19501, filed 5/7/73.] Repealed by 04-14-028, filed 6/29/04, effective 1/1/05. Statutory Authority: RCW 49.17.010, 49.17.040, 49.17.050, and 49.17.060.

296-24-19503 General requirements. [Order 76-6, § 296-24-19503, filed 3/1/76; Order 73-5, § 296-24-19503, filed 5/9/73 and Order 73-4, § 296-24-19503, filed 5/7/73.] Repealed by 04-14-028, filed 6/29/04, effective 1/1/05. Statutory Authority: RCW 49.17.010, 49.17.040, 49.17.050, and 49.17.060.

296-24-19505 Mechanical power press guarding and construction, general. [Statutory Authority: Chapter 49.17 RCW. 91-03-044 (Order 90-18), § 296-24-19505, filed 1/10/91, effective 2/12/91; Order 76-6, § 296-24-19505, filed 3/1/76; Order 74-27, § 296-24-19505, filed 5/7/74; Order 73-5, § 296-24-19505, filed 5/9/73 and Order 73-4, § 296-24-19505, filed 5/7/73.] Repealed by 04-14-028, filed 6/29/04, effective 1/1/05. Statutory Authority: RCW 49.17.010, 49.17.040, 49.17.050, and 49.17.060.

296-24-19507 Safeguarding the point of operation. [Statutory Authority: Chapter 49.17 RCW. 94-15-096 (Order 94-07), § 296-24-19507, filed 7/20/94, effective 9/20/94; 88-23-054 (Order 88-25), § 296-24-19507, filed 11/14/88. Statutory Authority: RCW 49.17.040, 49.17.050, 49.17.240, chapters 43.22 and 42.30 RCW. 80-17-015 (Order 80-21), § 296-24-19507, filed 11/13/80; Order 76-6, § 296-24-19507, filed 3/1/76; Order 73-5, § 296-24-19507, filed 5/9/73 and Order 73-4, § 296-24-19507, filed 5/7/73.] Repealed by 04-14-028, filed 6/29/04, effective 1/1/05. Statutory Authority: RCW 49.17.010, 49.17.040, 49.17.050, and 49.17.060.

296-24-19509 Design, construction, setting and feeding of dies. [Statutory Authority: Chapter 49.17 RCW. 91-03-044 (Order 90-18), § 296-24-19509, filed 1/10/91, effective 2/12/91. Statutory Authority: RCW 49.17.040 and 49.17.050. 82-02-003 (Order 81-32), § 296-24-19509, filed 12/24/81; Order 76-6, § 296-24-19509, filed 3/1/76; Order 73-5, § 296-24-19509, filed 5/9/73 and Order 73-4, § 296-24-19509, filed 5/7/73.] Repealed by 04-14-028, filed 6/29/04, effective 1/1/05. Statutory Authority: RCW 49.17.010, 49.17.040, 49.17.050, and 49.17.060.

296-24-19511 Inspection, maintenance and modification of presses. [Order 76-6, § 296-24-19511, filed 3/1/76; Order 73-5, § 296-24-19511, filed 5/9/73 and Order 73-4, § 296-24-19511, filed 5/7/73.] Repealed by 04-14-028, filed 6/29/04, effective 1/1/05. Statutory Authority: RCW 49.17.010, 49.17.040, 49.17.050, and 49.17.060.

296-24-19513 Operation of power presses. [Statutory Authority: Chapter 49.17 RCW. 94-15-096 (Order 94-07), § 296-24-19513, filed 7/20/94, effective 9/20/94; Order 76-6, § 296-24-19513, filed 3/1/76; Order 73-5, § 296-24-19513, filed 5/9/73 and Order 73-4, § 296-24-19513, filed 5/7/73.] Repealed by 04-14-028, filed 6/29/04, effective 1/1/05. Statutory Authority: RCW 49.17.010, 49.17.040, 49.17.050, and 49.17.060.

296-24-19514 Reports of injuries to employees operating mechanical power presses. [Statutory Authority: RCW 49.17.040, [49.17].050 and [49.17].060. 95-17-036, § 296-24-19514, filed 8/9/95, effective 9/25/95.] Repealed by 04-14-028, filed 6/29/04, effective 1/1/05. Statutory Authority: RCW 49.17.010, 49.17.040, 49.17.050, and 49.17.060.

296-24-19515 Reports of point of operation injuries—Mechanical power presses. [Order 76-6, § 296-24-19515, filed 3/1/76.] Repealed by 88-14-108 (Order 88-11), filed 7/6/88. Statutory Authority: Chapter 49.17 RCW.

296-24-19517 Presence sensing device initiation (PSDI). [Statutory Authority: RCW 49.17.040, [49.17].050 and [49.17].060. 95-17-036, § 296-24-19517, filed 8/9/95, effective 9/25/95. Statutory Authority: Chapter 49.17 RCW. 94-15-096 (Order 94-07), § 296-24-19517, filed 7/20/94, effective 9/20/94; 92-17-022 (Order 92-06), § 296-24-19517, filed 8/10/92, effective 9/10/92; 88-23-054 (Order 88-25), § 296-24-19517, filed 11/14/88.] Repealed by 04-14-028, filed 6/29/04, effective 1/1/05. Statutory Authority: RCW 49.17.010, 49.17.040, 49.17.050, and 49.17.060.

296-24-197 Compactors. [Order 74-27, § 296-24-197, filed 5/7/74.] Repealed by 04-14-028, filed 6/29/04, effective 1/1/05. Statutory Authority: RCW 49.17.010, 49.17.040, 49.17.050, and 49.17.060.

296-24-200 Forging machines. [Statutory Authority: Chapter 49.17 RCW. 91-03-044 (Order 90-18), § 296-24-200, filed 1/10/91, effective 2/12/91; Order 73-5, § 296-24-200, filed 5/9/73 and Order 73-4, § 296-24-200, filed 5/7/73.] Repealed by 04-14-028, filed 6/29/04, effective 1/1/05. Statutory Authority: RCW 49.17.010, 49.17.040, 49.17.050, and 49.17.060.

296-24-20001 Definitions. [Order 73-5, § 296-24-20001, filed 5/9/73 and Order 73-4, § 296-24-20001, filed 5/7/73.] Repealed by 04-14-028, filed 6/29/04, effective 1/1/05. Statutory Authority: RCW 49.17.010, 49.17.040, 49.17.050, and 49.17.060.

296-24-20003 General requirements. [Statutory Authority: Chapter 49.17 RCW. 94-15-096 (Order 94-07), § 296-24-20003, filed 7/20/94, effective 9/20/94; Order 76-6, § 296-24-20003, filed 3/1/76; Order 73-5, § 296-24-20003, filed 5/9/73 and Order 73-4, § 296-24-20003, filed 5/7/73.] Repealed by 04-14-028, filed 6/29/04, effective 1/1/05. Statutory Authority: RCW 49.17.010, 49.17.040, 49.17.050, and 49.17.060.

296-24-20005 Hammers, general. [Order 73-5, § 296-24-20005, filed 5/9/73 and Order 73-4, § 296-24-20005, filed 5/7/73.] Repealed by 04-14-028, filed 6/29/04, effective 1/1/05. Statutory Authority: RCW 49.17.010, 49.17.040, 49.17.050, and 49.17.060.

296-24-20007 Presses. [Order 73-5, § 296-24-20007, filed 5/9/73 and Order 73-4, § 296-24-20007, filed 5/7/73.] Repealed by 04-14-028, filed 6/29/04, effective 1/1/05. Statutory Authority: RCW 49.17.010, 49.17.040, 49.17.050, and 49.17.060.

296-24-20009 Power-driven hammers. [Order 73-5, § 296-24-20009, filed 5/9/73 and Order 73-4, § 296-24-20009, filed 5/7/73.] Repealed by 04-14-028, filed 6/29/04, effective 1/1/05. Statutory Authority: RCW 49.17.010, 49.17.040, 49.17.050, and 49.17.060.

296-24-20011 Gravity hammers. [Order 73-5, § 296-24-20011, filed 5/9/73 and Order 73-4, § 296-24-20011, filed 5/7/73.] Repealed by 04-14-028, filed 6/29/04, effective 1/1/05. Statutory Authority: RCW 49.17.010, 49.17.040, 49.17.050, and 49.17.060.

296-24-20013 Forging presses. [Order 73-5, § 296-24-20013, filed 5/9/73 and Order 73-4, § 296-24-20013, filed 5/7/73.] Repealed by 04-14-028, filed 6/29/04, effective 1/1/05. Statutory Authority: RCW 49.17.010, 49.17.040, 49.17.050, and 49.17.060.

296-24-20015 Trimming presses. [Order 73-5, § 296-24-20015, filed 5/9/73 and Order 73-4, § 296-24-20015, filed 5/7/73.] Repealed by 04-14-028, filed 6/29/04, effective 1/1/05. Statutory Authority: RCW 49.17.010, 49.17.040, 49.17.050, and 49.17.060.

296-24-20017 Upsetters. [Order 73-5, § 296-24-20017, filed 5/9/73 and Order 73-4, § 296-24-20017, filed 5/7/73.] Repealed by 04-14-028, filed 6/29/04, effective 1/1/05. Statutory Authority: RCW 49.17.010, 49.17.040, 49.17.050, and 49.17.060.

296-24-20019 Other forging equipment. [Order 73-5, § 296-24-20019, filed 5/9/73 and Order 73-4, § 296-24-20019, filed 5/7/73.] Repealed by 04-14-028, filed 6/29/04, effective 1/1/05. Statutory Authority: RCW 49.17.010, 49.17.040, 49.17.050, and 49.17.060.

296-24-20021 Other forge facility equipment. [Order 73-5, § 296-24-20021, filed 5/9/73 and Order 73-4, § 296-24-20021, filed 5/7/73.] Repealed by 04-14-028, filed 6/29/04, effective 1/1/05. Statutory Authority: RCW 49.17.010, 49.17.040, 49.17.050, and 49.17.060.

296-24-205 Safeguarding power transmission parts. [Statutory Authority: RCW 49.17.010, [49.17.]040 and [49.17.]-050. 98-10-073, 98-24-120 and 99-12-091, § 296-24-205, filed 5/4/98, 12/2/98 and 6/1/99, effective 1/1/00; Order 73-5, § 296-24-205, filed 5/9/73 and Order 73-4, § 296-24-205, filed 5/7/73.] Repealed by 04-14-028, filed 6/29/04, effective 1/1/05. Statutory Authority: RCW 49.17.010, 49.17.040, 49.17.050, and 49.17.060.

296-24-20501 What is an employer's duty to protect employees from hazards of power transmission parts? [Statutory Authority: RCW 49.17.010, [49.17].040 and [49.17].050. 99-19-112, § 296-24-20501, filed 9/21/99, effective 1/1/00; 98-10-073, 98-24-120 and 99-12-091, § 296-24-20501, filed 5/4/98, 12/2/98 and 6/1/99, effective 1/1/00. Statutory Authority: Chapter 49.17 RCW. 89-11-035 (Order 89-03), § 296-24-20501, filed 5/15/89, effective 6/30/89; Order 73-5, § 296-24-20501, filed 5/9/73 and Order 73-4, § 296-24-20501, filed 5/7/73.] Repealed by 04-14-028, filed 6/29/04, effective 1/1/05. Statutory Authority: RCW 49.17.010, 49.17.040, 49.17.050, and 49.17.060.

296-24-20503 What requirements must guards meet? [Statutory Authority: RCW 49.17.010, [49.17].040 and [49.17].-050. 99-19-112, § 296-24-20503, filed 9/21/99, effective 1/1/00; 98-10-073, 98-24-120 and 99-12-091, § 296-24-20503, filed 5/4/98, 12/2/98 and 6/1/99, effective 1/1/00. Statutory Authority: Chapter 49.17 RCW. 90-03-029 (Order 89-20), § 296-24-20503, filed 1/11/90, effective 2/26/90; 89-11-035 (Order 89-03), § 296-24-20503, filed 5/15/89, effective 6/30/89; Order 73-5, § 296-24-20503, filed 5/9/73 and Order 73-4, § 296-24-20503, filed 5/7/73.] Repealed by 04-14-028, filed 6/29/04, effective 1/1/05. Statutory Authority: RCW 49.17.010, 49.17.040, 49.17.050, and 49.17.060.

296-24-20505 What requirements must devices meet? [Statutory Authority: RCW 49.17.010, [49.17].040 and [49.17].050. 99-19-112, § 296-24-20505, filed 9/21/99, effective 1/1/00; 98-10-073, 98-24-120 and 99-12-091, § 296-24-20505, filed 5/4/98, 12/2/98 and 6/1/99, effective 1/1/00; Order 73-5, § 296-24-20505, filed 5/9/73 and Order 73-4, § 296-24-20505, filed 5/7/73.] Repealed by 04-14-028, filed 6/29/04, effective 1/1/05. Statutory Authority: RCW 49.17.010, 49.17.040, 49.17.050, and 49.17.060.

296-24-20507 What requirements must safeguarding by distance meet? [Statutory Authority: RCW 49.17.010, [49.17].-040 and [49.17].050. 99-19-112, § 296-24-20507, filed 9/21/99, effective 1/1/00; 98-10-073, 98-24-120 and 99-12-091, § 296-24-20507, filed 5/4/98, 12/2/98 and 6/1/99, effective 1/1/00; Order 73-5, § 296-24-20507, filed 5/9/73 and Order 73-4, § 296-24-20507, filed 5/7/73.] Repealed by 04-14-028, filed 6/29/04, effective 1/1/05. Statutory Authority: RCW 49.17.010, 49.17.-040, 49.17.050, and 49.17.060.

296-24-20509 What requirements must safeguarding by location meet? [Statutory Authority: RCW 49.17.010, [49.17].040 and [49.17].050. 99-19-112, § 296-24-20509, filed 9/21/99, effective 1/1/00; 98-10-073, 98-24-120 and 99-12-091, § 296-24-20509, filed 5/4/98, 12/2/98 and 6/1/99, effective 1/1/00; Order 73-5, § 296-24-20509, filed 5/9/73 and Order 73-4, § 296-24-20509, filed 5/7/73.] Repealed by 04-14-028, filed 6/29/04, effective 1/1/05. Statutory Authority: RCW 49.17.010, 49.17.040, 49.17.050, and 49.17.060.

296-24-20511 What other responsibilities beyond safeguarding does an employer have to protect employees from power transmission parts? [Statutory Authority: RCW 49.17.-010, [49.17].040 and [49.17].050. 99-19-112, § 296-24-20511, filed 9/21/99, effective 1/1/00; 98-10-073, 98-24-120 and 99-12-091, § 296-24-20511, filed 5/4/98, 12/2/98 and 6/1/99, effective 1/1/00. Statutory Authority: Chapter 49.17 RCW. 94-15-096 (Order 94-07), § 296-24-20511, filed 7/20/94, effective 9/20/94; Order 73-5, § 296-24-20511, filed 5/9/73 and Order 73-4, § 296-24-20511, filed 5/7/73.] Repealed by 04-14-028, filed 6/29/04, effective 1/1/05. Statutory Authority: RCW 49.17.010, 49.17.040, 49.17.050, and 49.17.060.

296-24-20513 When may a guardrail be used as a safeguard? [Statutory Authority: RCW 49.17.010, [49.17].040 and [49.17].050. 99-19-112, § 296-24-20513, filed 9/21/99, effective 1/1/00; 98-10-073, 98-24-120 and 99-12-091, § 296-24-20513, filed 5/4/98, 12/2/98 and 6/1/99, effective 1/1/00; Order 73-5, § 296-24-20513, filed 5/9/73 and Order 73-4, § 296-24-20513, filed 5/7/73.] Repealed by 04-14-028, filed 6/29/04, effective 1/1/05. Statutory Authority: RCW 49.17.010, 49.17.040, 49.17.050, and 49.17.060.

296-24-20515 What are the additional requirements for flywheels? [Statutory Authority: RCW 49.17.010, [49.17].040 and [49.17].050. 99-19-112, § 296-24-20515, filed 9/21/99, effective 1/1/00; 98-10-073, 98-24-120 and 99-12-091, § 296-24-20515, filed 5/4/98, 12/2/98 and 6/1/99, effective 1/1/00; Order 73-5, § 296-24-20515, filed 5/9/73 and Order 73-4, § 296-24-20515, filed 5/7/73.] Repealed by 04-14-028, filed 6/29/04, effective 1/1/05. Statutory Authority: RCW 49.17.010, 49.17.040, 49.17.050, and 49.17.060.

296-24-20517 What are the additional requirements for shafting? [Statutory Authority: RCW 49.17.010, [49.17].040 and [49.17].050. 99-19-112, § 296-24-20517, filed 9/21/99, effective 1/1/00; 98-10-073, 98-24-120 and 99-12-091, § 296-24-20517, filed 5/4/98, 12/2/98 and 6/1/99, effective 1/1/00; Order 73-5, § 296-24-20517, filed 5/9/73 and Order 73-4, § 296-24-20517, filed 5/7/73.] Repealed by 04-14-028, filed 6/29/04, effective 1/1/05. Statutory Authority: RCW 49.17.010, 49.17.040, 49.17.050, and 49.17.060.

296-24-20519 What are the additional requirements for pulleys? [Statutory Authority: RCW 49.17.010, [49.17.]040 and [49.17.]050. 98-10-073, 98-24-120 and 99-12-091, § 296-24-20519, filed 5/4/98, 12/2/98 and 6/1/99, effective 1/1/00; Order 73-5, § 296-24-20519, filed 5/9/73 and Order 73-4, § 296-24-20519, filed 5/7/73.] Repealed by 04-14-028, filed 6/29/04, effective 1/1/05. Statutory Authority: RCW 49.17.010, 49.17.040, 49.17.050, and 49.17.060.

296-24-20521 What are the additional requirements for belt and rope drives? [Statutory Authority: RCW 49.17.010, [49.17].040 and [49.17].050. 99-19-112, § 296-24-20521, filed 9/21/99, effective 1/1/00; 98-10-073, 98-24-120 and 99-12-091, § 296-24-20521, filed 5/4/98, 12/2/98 and 6/1/99, effective 1/1/00; Order 73-5, § 296-24-20521, filed 5/9/73 and Order 73-4, § 296-24-20521, filed 5/7/73.] Repealed by 04-14-028, filed 6/29/04, effective 1/1/05. Statutory Authority: RCW 49.17.010, 49.17.040, 49.17.050, and 49.17.060.

296-24-20523 What are the additional requirements for gears? [Statutory Authority: RCW 49.17.010, [49.17.]040 and [49.17.]050. 98-10-073, 98-24-120 and 99-12-091, § 296-24-20523, filed 5/4/98, 12/2/98 and 6/1/99, effective 1/1/00; Order 73-5, § 296-24-20523, filed 5/9/73 and Order 73-4, § 296-24-20523, filed 5/7/73.] Repealed by 04-14-028, filed 6/29/04, effective 1/1/05. Statutory Authority: RCW 49.17.010, 49.17.040, 49.17.050, and 49.17.060.

296-24-20525 What are the additional requirements for belt shifters? [Statutory Authority: RCW 49.17.010, [49.17].040 and [49.17].050. 99-19-112, § 296-24-20525, filed 9/21/99, effective 1/1/00; 98-10-073, 98-24-120 and 99-12-091, § 296-24-20525, filed 5/4/98, 12/2/98 and 6/1/99, effective 1/1/00. Statutory Authority: Chapter 49.17 RCW. 94-15-096 (Order 94-07), § 296-24-20525, filed 7/20/94, effective 9/20/94; Order 76-6, § 296-24-20525,

filed 3/1/76; Order 73-5, § 296-24-20525, filed 5/9/73 and Order 73-4, § 296-24-20525, filed 5/7/73.] Repealed by 04-14-028, filed 6/29/04, effective 1/1/05. Statutory Authority: RCW 49.17.010, 49.17.040, 49.17.050, and 49.17.060.

296-24-20527 What are the additional requirements for sewing machines? [Statutory Authority: RCW 49.17.010, [49.17].040 and [49.17].050. 99-19-112, § 296-24-20527, filed 9/21/99, effective 1/1/00; 98-10-073, 98-24-120 and 99-12-091, § 296-24-20527, filed 5/4/98, 12/2/98 and 6/1/99, effective 1/1/00; Order 73-5, § 296-24-20527, filed 5/9/73 and Order 73-4, § 296-24-20527, filed 5/7/73.] Repealed by 04-14-028, filed 6/29/04, effective 1/1/05. Statutory Authority: RCW 49.17.010, 49.17.040, 49.17.050, and 49.17.060.

296-24-20529 Reserve. [Statutory Authority: RCW 49.17.010, [49.17.]040 and [49.17.]050. 98-10-073, 98-24-120 and 99-12-091, § 296-24-20529, filed 5/4/98, 12/2/98 and 6/1/99, effective 1/1/00; Order 73-5, § 296-24-20529, filed 5/9/73 and Order 73-4, § 296-24-20529, filed 5/7/73.] Repealed by 04-14-028, filed 6/29/04, effective 1/1/05. Statutory Authority: RCW 49.17.010, 49.17.-040, 49.17.050, and 49.17.060.

296-24-20531 Reserve. [Statutory Authority: RCW 49.17.010, [49.17.]040 and [49.17.]050. 98-10-073, 98-24-120 and 99-12-091, § 296-24-20531, filed 5/4/98, 12/2/98 and 6/1/99, effective 1/1/00; Order 76-6, § 296-24-20531, filed 3/1/76; Order 73-5, § 296-24-20531, filed 5/9/73 and Order 73-4, § 296-24-20531, filed 5/7/73.] Repealed by 04-14-028, filed 6/29/04, effective 1/1/05. Statutory Authority: RCW 49.17.010, 49.17.040, 49.17.050, and 49.17.060.

296-24-20533 Reserve. [Statutory Authority: RCW 49.17.010, [49.17.]040 and [49.17.]050. 98-10-073, 98-24-120 and 99-12-091, § 296-24-20533, filed 5/4/98, 12/2/98 and 6/1/99, effective 1/1/00. Statutory Authority: RCW 49.17.040, 49.17.050, 49.17.240, chapters 43.22 and 42.30 RCW. 80-17-015 (Order 80-21), § 296-24-20533, filed 11/13/80; Order 73-5, § 296-24-20533, filed 5/9/73 and Order 73-4, § 296-24-20533, filed 5/7/73.] Repealed by 04-14-028, filed 6/29/04, effective 1/1/05. Statutory Authority: RCW 49.17.010, 49.17.040, 49.17.050, and 49.17.060.

296-24-20699 Appendices A through D are added to Part C of chapter 296-24 WAC, to describe the federal procedures for third-party validation and certification of presence sensing devices on mechanical power presses. [Statutory Authority: Chapter 49.17 RCW. 88-23-054 (Order 88-25), § 296-24-20699, filed 11/14/88.] Repealed by 04-14-028, filed 6/29/04, effective 1/1/05. Statutory Authority: RCW 49.17.010, 49.17.040, 49.17.050, and 49.17.060.

296-24-20700 Appendix A to WAC 296-24-195. [Statutory Authority: Chapter 49.17 RCW. 92-17-022 (Order 92-06), § 296-24-20700, filed 8/10/92, effective 9/10/92; 91-24-017 (Order 91-07), § 296-24-20700, filed 11/22/91, effective 12/24/91; 90-09-026 (Order 90-01), § 296-24-20700, filed 4/10/90, effective 5/25/90; 88-23-054 (Order 88-25), § 296-24-20700, filed 11/14/88.] Repealed by 04-14-028, filed 6/29/04, effective 1/1/05. Statutory Authority: RCW 49.17.010, 49.17.040, 49.17.050, and 49.17.060.

296-24-20710 Appendix B to WAC 296-24-195. [Statutory Authority: Chapter 49.17 RCW. 88-23-054 (Order 88-25), § 296-24-20710, filed 11/14/88.] Repealed by 04-14-028, filed 6/29/04, effective 1/1/05. Statutory Authority: RCW 49.17.010, 49.17.040, 49.17.050, and 49.17.060.

296-24-20720 Appendix C to WAC 296-24-195. [Statutory Authority: Chapter 49.17 RCW. 88-23-054 (Order 88-25), § 296-24-20720, filed 11/14/88.] Repealed by 04-14-028, filed 6/29/04, effective 1/1/05. Statutory Authority: RCW 49.17.010, 49.17.040, 49.17.050, and 49.17.060.

296-24-20730 Appendix D to WAC 296-24-195. [Statutory Authority: Chapter 49.17 RCW. 92-17-022 (Order 92-06), § 296-24-20730, filed 8/10/92, effective 9/10/92; 88-23-054 (Order 88-25), § 296-24-20730, filed 11/14/88.] Repealed by 04-14-028, filed 6/29/04, effective 1/1/05. Statutory Authority: RCW 49.17.010, 49.17.040, 49.17.050, and 49.17.060.

296-24-21503 Secure storage. [Order 73-5, § 296-24-21503, filed 5/9/73 and Order 73-4, § 296-24-21503, filed 5/7/73.] Repealed by 01-11-038, filed 5/9/01, effective 9/1/01. Statutory Authority: RCW 49.17.010, [49.17].040, and [49.17].050.

296-24-21505 Housekeeping. [Order 73-5, § 296-24-21505, filed 5/9/73 and Order 73-4, § 296-24-21505, filed 5/7/73.] Repealed by 01-11-038, filed 5/9/01, effective 9/1/01. Statutory Authority: RCW 49.17.010, [49.17].040, and [49.17].050.

296-24-21507 Drainage. [Order 73-5, § 296-24-21507, filed 5/9/73 and Order 73-4, § 296-24-21507, filed 5/7/73.] Repealed by 01-11-038, filed 5/9/01, effective 9/1/01. Statutory Authority: RCW 49.17.010, [49.17].040, and [49.17].-050.

296-24-21515 Conveyors. [Statutory Authority: Chapter 49.17 RCW. 94-15-096 (Order 94-07), § 296-24-21515, filed 7/20/94, effective 9/20/94; Order 74-27, § 296-24-21515, filed 5/7/74; Order 73-5, § 296-24-21515, filed 5/9/73 and Order 73-4, § 296-24-21515, filed 5/7/73.] Repealed by 06-05-027, filed 2/7/06, effective 4/1/06. Statutory Authority: RCW 49.17.010, 49.17.040, 49.17.050, 49.17.060.

296-24-217 Servicing multipiece and single-piece rim wheels. [Statutory Authority: RCW 49.17.040 and 49.17.050. 84-17-099 (Order 84-18), § 296-24-217, filed 8/21/84. Statutory Authority: RCW 49.17.040, 49.17.050, 49.17.240, chapters 42.30 and 43.22 RCW. 80-17-014 (Order 80-20), § 296-24-217, filed 11/13/80.] Repealed by 07-03-163, filed 1/24/07, effective 4/1/07. Statutory Authority: RCW 49.17.010, 49.17.040, 49.17.050, 49.17.060.

296-24-21701 Scope. [Statutory Authority: Chapter 49.17 RCW. 88-14-108 (Order 88-11), § 296-24-21701, filed 7/6/88. Statutory Authority: RCW 49.17.040 and 49.17.050. 84-17-099 (Order 84-18), § 296-24-21701, filed 8/21/84. Statutory Authority: RCW 49.17.040, 49.17.-050, 49.17.240, chapters 42.30 and 43.22 RCW. 80-17-014 (Order 80-20), § 296-24-21701, filed 11/13/80.] Repealed by 04-20-079, filed 10/5/04, effective 2/1/05. Statutory Authority: RCW 49.17.010, 49.17.040, 49.17.050, 49.17.060. Later promulgation, see chapter 296-864 WAC.

296-24-21703 Definitions. [Statutory Authority: Chapter 49.17 RCW. 89-11-035 (Order 89-03), § 296-24-21703, filed 5/15/89, effective 6/30/89. Statutory Authority: RCW 49.17.040 and 49.17.050. 84-17-099 (Order 84-18), § 296-24-21703, filed 8/21/84. Statutory Authority: RCW 49.17.040, 49.17.050, 49.17.240, chapters 42.30 and 43.22 RCW. 80-17-014 (Order 80-20), § 296-24-21703, filed 11/13/80.] Repealed by 04-20-079, filed 10/5/04, effective 2/1/05. Statutory Authority: RCW 49.17.010, 49.17.040, 49.17.050, 49.17.060. Later promulgation, see chapter 296-864 WAC.

296-24-21705 Employee training. [Statutory Authority: Chapter 49.17 RCW. 94-15-096 (Order 94-07), § 296-24-21705, filed 7/20/94, effective 9/20/94. Statutory Authority: RCW 49.17.040 and 49.17.050. 86-03-064 (Order 86-02), § 296-24-21705, filed 1/17/86; 84-17-099 (Order 84-18), § 296-24-21705, filed 8/21/84. Statutory Authority: RCW 49.17.040, 49.17.050, 49.17.240, chapters 42.30 and 43.22 RCW. 80-17-014 (Order 80-20), § 296-24-21705, filed 11/13/80.] Repealed by 04-20-079, filed 10/5/04, effective 2/1/05. Statutory Authority: RCW 49.17.010, 49.17.040, 49.17.050, 49.17.060. Later promulgation, see chapter 296-864 WAC.

296-24-21707 Tire servicing equipment. [Statutory Authority: Chapter 49.17 RCW. 89-11-035 (Order 89-03), § 296-24-21707, filed 5/15/89, effective 6/30/89; 88-11-021 (Order 88-04), § 296-24-21707, filed 5/11/88. Statutory Authority: RCW 49.17.040 and 49.17.050. 86-03-064 (Order 86-02), § 296-24-21707, filed 1/17/86; 84-17-099 (Order 84-18), § 296-24-21707, filed 8/21/84. Statutory Authority: RCW 49.17.040, 49.17.050, 49.17.-240, chapters 42.30 and 43.22 RCW. 80-17-014 (Order 80-20), § 296-24-21707, filed 11/13/80.] Repealed by 04-20-079, filed 10/5/04, effective 2/1/05. Statutory Authority: RCW 49.17.010, 49.17.040, 49.17.050, 49.17.060. Later promulgation, see chapter 296-864 WAC.

296-24-21709 Wheel component acceptability. [Statutory Authority: RCW 49.17.040 and 49.17.050. 84-17-099 (Order 84-18), § 296-24-21709, filed 8/21/84. Statutory Authority: RCW 49.17.040, 49.17.050, 49.17.240, chapters 42.30 and 43.22 RCW. 80-17-014 (Order 80-20), § 296-24-21709, filed 11/13/80.] Repealed by 04-20-079, filed 10/5/04, effective 2/1/05. Statutory Authority: RCW 49.17.010, 49.17.040, 49.17.050, 49.17.060. Later promulgation, see chapter 296-864 WAC.

296-24-21711 Safe operating procedure—Multipiece rim wheels. [Statutory Authority: Chapter 49.17 RCW. 94-15-096 (Order 94-07), § 296-24-21711, filed 7/20/94, effective 9/20/94. Statutory Authority: RCW 49.17.040 and 49.17.050. 86-03-064 (Order 86-02), § 296-24-21711, filed 1/17/86; 84-17-099 (Order 84-18), § 296-24-21711, filed 8/21/84. Statutory Authority: RCW 49.17.040, 49.17.050, 49.17.240, chapters 42.30 and 43.22 RCW. 80-17-014 (Order 80-20), § 296-24-21711, filed 11/13/80.] Repealed by 04-20-079, filed 10/5/04, effective 2/1/05. Statutory Authority: RCW 49.17.010, 49.17.040, 49.17.050, 49.17.060. Later promulgation, see chapter 296-864 WAC.

296-24-21713 Safe operating procedure—Single-piece rim wheels. [Statutory Authority: Chapter 49.17 RCW. 89-11-035 (Order 89-03), § 296-24-21713, filed 5/15/89, effective 6/30/89. Statutory Authority: RCW 49.17.040 and 49.17.050. 84-17-099 (Order 84-18), § 296-24-21713, filed 8/21/84.] Repealed by 04-20-079, filed 10/5/04, effective 2/1/05. Statutory Authority: RCW 49.17.010, 49.17.040, 49.17.050, 49.17.060. Later promulgation, see chapter 296-864 WAC.

296-24-220 Indoor general storage. [Order 73-5, § 296-24-220, filed 5/9/73 and Order 73-4, § 296-24-220, filed 5/7/73.] Repealed by Order 74-27, filed 5/7/74.

296-24-22001 Definitions. [Order 73-5, § 296-24-22001, filed 5/9/73 and Order 73-4, § 296-24-22001, filed 5/7/73.] Repealed by Order 74-27, filed 5/7/74.

296-24-22003 General requirements. [Order 73-5, § 296-24-22003, filed 5/9/73 and Order 73-4, § 296-24-22003, filed 5/7/73.] Repealed by Order 74-27, filed 5/7/74.

296-24-22005 Piling procedures and precautions. [Order 73-5, § 296-24-22005, filed 5/9/73 and Order 73-4, § 296-24-22005, filed 5/7/73.] Repealed by Order 74-27, filed 5/7/74.

296-24-22007 Fire protection requirements. [Order 73-5, § 296-24-22007, filed 5/9/73 and Order 73-4, § 296-24-22007, filed 5/7/73.] Repealed by Order 74-27, filed 5/7/74.

296-24-22009 Mechanical handling equipment. [Order 73-5, § 296-24-22009, filed 5/9/73 and Order 73-4, § 296-24-22009, filed 5/7/73.] Repealed by Order 74-27, filed 5/7/74.

296-24-22011 Building service equipment. [Order 73-5, § 296-24-22011, filed 5/9/73 and Order 73-4, § 296-24-22011, filed 5/7/73.] Repealed by Order 74-27, filed 5/7/74.

296-24-230 Powered industrial trucks. [Order 73-5, § 296-24-230, filed 5/9/73 and Order 73-4, § 296-24-230, filed 5/7/73.] Repealed by 04-19-051, filed 9/14/04, effective 2/1/05. Statutory Authority: RCW 49.17.010, 49.17.040, 49.17.050, 49.17.060.

296-24-23001 Definition. [Statutory Authority: RCW 49.17.010, [49.17].040 and [49.17].050. 00-01-176, § 296-24-23001, filed 12/21/99, effective 3/1/00. Statutory Authority: Chapter 49.17 RCW. 88-23-054 (Order 88-25), § 296-24-23001, filed 11/14/88; Order 74-27, § 296-24-23001, filed 5/7/74; Order 73-5, § 296-24-23001, filed 5/9/73 and Order 73-4, § 296-24-23001, filed 5/7/73.] Repealed by 04-19-051, filed 9/14/04, effective 2/1/05. Statutory Authority: RCW 49.17.010, 49.17.040, 49.17.050, 49.17.060.

296-24-23003 General requirements. [Statutory Authority: RCW 49.17.010, [49.17].040, [49.17].050. 02-12-098, § 296-24-23003, filed 6/5/02, effective 8/1/02; 00-01-176, § 296-24-23003, filed 12/21/99, effective 3/1/00; Order 76-6, § 296-24-23003, filed 3/1/76; Order 74-27, § 296-24-23003, filed 5/7/74; Order 73-5 § 296-24-23003, filed 5/9/73 and Order 73-4, § 296-24-23003, filed 5/7/73.] Repealed by 04-19-051, filed 9/14/04, effective 2/1/05. Statutory Authority: RCW 49.17.010, 49.17.040, 49.17.050, 49.17.060.

296-24-23005 Designations. [Statutory Authority: RCW 49.17.010, [49.17].040 and [49.17].050. 00-01-176, § 296-24-23005, filed 12/21/99, effective 3/1/00; Order 73-5, § 296-24-23005, filed 5/9/73 and Order 73-4, § 296-24-23005, filed 5/7/73.] Repealed by 04-19-051, filed 9/14/04, effective 2/1/05. Statutory Authority: RCW 49.17.010, 49.17.040, 49.17.050, 49.17.060.

296-24-23007 Designated locations. [Statutory Authority: RCW 49.17.010, [49.17].040 and [49.17].050. 00-01-176, § 296-24-23007, filed 12/21/99, effective 3/1/00. Statutory Authority: Chapter 49.17 RCW. 91-24-017 (Order 91-07), § 296-24-23007, filed 11/22/91, effective 12/24/91; Order 73-5, § 296-24-23007, filed 5/9/73 and Order 73-4, § 296-24-23007, filed 5/7/73.] Repealed by 04-19-051, filed 9/14/04, effective 2/1/05. Statutory Authority: RCW 49.17.010, 49.17.040, 49.17.050, 49.17.060.

296-24-23009 Converted industrial trucks. [Statutory Authority: RCW 49.17.010, [49.17].040 and [49.17].050. 00-01-176, § 296-24-23009, filed 12/21/99, effective 3/1/00; Order 73-5, § 296-24-23009, filed 5/9/73 and Order 73-4, § 296-24-23009, filed 5/7/73.] Repealed by 04-19-051, filed 9/14/04, effective 2/1/05. Statutory Authority: RCW 49.17.010, 49.17.040, 49.17.050, 49.17.060.

296-24-23011 Safety guards. [Statutory Authority: RCW 49.17.010, [49.17].040 and [49.17].050. 00-01-176, § 296-24-23011, filed 12/21/99, effective 3/1/00; Order 73-5, § 296-24-23011, filed 5/9/73 and Order 73-4, § 296-24-23011, filed 5/7/73.] Repealed by 04-19-051, filed 9/14/04, effective 2/1/05. Statutory Authority: RCW 49.17.010, 49.17.040, 49.17.050, 49.17.060.

296-24-23013 Fuel handling and storage. [Statutory Authority: RCW 49.17.010, [49.17].040 and [49.17].050. 00-01-176, § 296-24-23013, filed 12/21/99, effective 3/1/00; Order 73-5, § 296-24-23013, filed 5/9/73 and Order 73-4, § 296-24-23013, filed 5/7/73.] Repealed by 04-19-051, filed 9/14/04, effective 2/1/05. Statutory Authority: RCW 49.17.010, 49.17.040, 49.17.050, 49.17.060.

296-24-23015 Changing and charging storage batteries. [Statutory Authority: RCW 49.17.010, [49.17].040 and [49.17].-050. 00-01-176, § 296-24-23015, filed 12/21/99, effective 3/1/00; Order 73-5, § 296-24-23015, filed 5/9/73 and Order 73-4, § 296-24-23015, filed 5/7/73.] Repealed by 04-19-051, filed 9/14/04, effective 2/1/05. Statutory Authority: RCW 49.17.010, 49.17.040, 49.17.050, 49.17.060.

296-24-23017 Lighting for operating areas. [Statutory Authority: RCW 49.17.010, [49.17].040 and [49.17].050. 00-01-176, § 296-24-23017, filed 12/21/99, effective 3/1/00; Order 73-5, § 296-24-23017, filed 5/9/73 and Order 73-4, § 296-24-23017, filed 5/7/73.] Repealed by 04-19-051, filed 9/14/04, effective 2/1/05. Statutory Authority: RCW 49.17.010, 49.17.040, 49.17.050, 49.17.060.

296-24-23019 Control of noxious gases and fumes. [Statutory Authority: RCW 49.17.010, [49.17].040 and [49.17].050. 00-01-176, § 296-24-23019, filed 12/21/99, effective 3/1/00; Order 73-5, § 296-24-23019, filed 5/9/73 and Order 73-4, § 296-24-23019, filed 5/7/73.] Repealed by 04-19-051, filed 9/14/04, effective 2/1/05. Statutory Authority: RCW 49.17.010, 49.17.040, 49.17.050, 49.17.060.

296-24-23021 Dockboards (bridge plates). [Statutory Authority: RCW 49.17.010, [49.17].040 and [49.17].050. 00-01-176, § 296-24-23021, filed 12/21/99, effective 3/1/00; Order 73-5, § 296-24-23021, filed 5/9/73 and Order 73-4, § 296-24-23021, filed 5/7/73.] Repealed by 04-19-051, filed 9/14/04, effective 2/1/05. Statutory Authority: RCW 49.17.010, 49.17.040, 49.17.050, 49.17.060.

296-24-23023 Trucks and railroad cars. [Statutory Authority: RCW 49.17.010, [49.17].040 and [49.17].050. 00-01-176, § 296-24-23023, filed 12/21/99, effective 3/1/00. Statutory Authority: Chapter 49.17 RCW. 91-03-044 (Order 90-18), § 296-24-23023, filed 1/10/91, effective 2/12/91; Order 73-5, § 296-24-23023, filed 5/9/73 and Order 73-4, § 296-24-23023, filed 5/7/73.] Repealed by 04-19-051, filed 9/14/04, effective 2/1/05. Statutory Authority: RCW 49.17.010, 49.17.040, 49.17.050, 49.17.060.

296-24-23025 Operator training. [Statutory Authority: RCW 49.17.-010, [49.17].040 and [49.17].050. 00-01-176, § 296-24-23025, filed 12/21/99, effective 3/1/00; Order 73-5, § 296-24-23025, filed 5/9/73 and Order 73-4, § 296-24-23025, filed 5/7/73.] Repealed by 04-19-051, filed 9/14/04, effective 2/1/05. Statutory Authority: RCW 49.17.010, 49.17.040, 49.17.050, 49.17.060.

296-24-23027 Powered industrial truck operations. [Statutory Authority: RCW 49.17.010, [49.17].040, and [49.17].050. 00-08-078, § 296-24-23027, filed 4/4/00, effective 7/1/00; 00-01-176, § 296-24-23027, filed 12/21/99, effective 3/1/00. Statutory Authority: Chapter 49.17 RCW. 91-03-044 (Order 90-18), § 296-24-23027, filed 1/10/91, effective 2/12/91; Order 74-27, § 296-24-23027, filed 5/7/74; Order 73-5, § 296-24-23027, filed 5/9/73 and Order 73-4, § 296-24-23027, filed 5/7/73.] Repealed by 04-19-051, filed 9/14/04, effective 2/1/05. Statutory Authority: RCW 49.17.010, 49.17.040, 49.17.050, 49.17.060.

296-24-23029 Traveling. [Statutory Authority: RCW 49.17.010, [49.17].040 and [49.17].050. 00-01-176, § 296-24-

23029, filed 12/21/99, effective 3/1/00; Order 73-5, § 296-24-23029, filed 5/9/73 and Order 73-4, § 296-24-23029, filed 5/7/73.] Repealed by 04-19-051, filed 9/14/04, effective 2/1/05. Statutory Authority: RCW 49.17.010, 49.17.040, 49.17.050, 49.17.060.

296-24-23031 Loading. [Statutory Authority: RCW 49.17.010, [49.17].040 and [49.17].050. 00-01-176, § 296-24-23031, filed 12/21/99, effective 3/1/00; Order 73-5, § 296-24-23031, filed 5/9/73 and Order 73-4, § 296-24-23031, filed 5/7/73.] Repealed by 04-19-051, filed 9/14/04, effective 2/1/05. Statutory Authority: RCW 49.17.010, 49.17.040, 49.17.050, 49.17.060.

296-24-23033 Operation of the truck. [Statutory Authority: RCW 49.17.010, [49.17].040 and [49.17].050. 00-01-176, § 296-24-23033, filed 12/21/99, effective 3/1/00; Order 73-5, § 296-24-23033, filed 5/9/73 and Order 73-4, § 296-24-23033, filed 5/7/73.] Repealed by 04-19-051, filed 9/14/04, effective 2/1/05. Statutory Authority: RCW 49.17.010, 49.17.040, 49.17.050, 49.17.060.

296-24-23035 Maintenance of industrial trucks. [Statutory Authority: RCW 49.17.010, [49.17].040 and [49.17].050. 00-01-176, § 296-24-23035, filed 12/21/99, effective 3/1/00; Order 73-5, § 296-24-23035, filed 5/9/73 and Order 73-4, § 296-24-23035, filed 5/7/73.] Repealed by 04-19-051, filed 9/14/04, effective 2/1/05. Statutory Authority: RCW 49.17.010, 49.17.040, 49.17.050, 49.17.060.

296-24-23037 Appendix 1 stability of powered industrial trucks nonmandatory appendix. [Statutory Authority: RCW 49.17.010, [49.17].040 and [49.17].050. 00-01-176, § 296-24-23037, filed 12/21/99, effective 3/1/00.] Repealed by 04-19-051, filed 9/14/04, effective 2/1/05. Statutory Authority: RCW 49.17.010, 49.17.040, 49.17.050, 49.17.060.

296-24-233 Motor vehicle trucks and trailers. [Statutory Authority: RCW 49.17.010, 49.17.040, 49.17.050, 49.17.060. 04-20-079, § 296-24-233, filed 10/5/04, effective 2/1/05. Statutory Authority: Chapter 49.17 RCW. 94-15-096 (Order 94-07), § 296-24-233, filed 7/20/94, effective 9/20/94; Order 76-29, § 296-24-233, filed 9/30/76; Order 76-6, § 296-24-233, filed 3/1/76; Order 75-11, § 296-24-233, filed 4/4/75; Order 74-27, § 296-24-233, filed 5/7/74; Order 73-5, § 296-24-233, filed 5/9/73 and Order 73-4, § 296-24-233, filed 5/7/73.] Repealed by 05-17-059, filed 8/10/05, effective 10/1/05. Statutory Authority: RCW 49.17.010, 49.17.040, 49.17.050, 49.17.060. Later promulgation, see chapter 296-865 WAC.

296-24-260 Helicopters. [Statutory Authority: RCW 49.17.010, [49.17].040, and [49.17].050. 01-17-033, § 296-24-260, filed 8/8/01, effective 9/1/01. Statutory Authority: Chapter 49.17 RCW. 94-15-096 (Order 94-07), § 296-24-260, filed 7/20/94, effective 9/20/94; 89-11-035 (Order 89-03), § 296-24-260, filed 5/15/89, effective 6/30/89; Order 76-28, § 296-24-260, filed 9/28/76.] Repealed by 04-09-099, filed 4/20/04, effective 9/1/04. Statutory Authority: RCW 49.17.010, 49.17.040, 49.17.050, and 49.17.060. Later promulgation, see chapter 296-829 WAC.

296-24-405 Dip tanks containing flammable or combustible liquids. [Order 73-5, § 296-24-405, filed 5/9/73 and Order 73-4, § 296-24-405, filed 5/7/73.] Repealed by 02-15-102, filed 7/17/02, effective 10/1/02. Statutory Authority: RCW 49.17.010, [49.17].040, and [49.17].050.

296-24-40501 Definitions. [Statutory Authority: Chapter 49.17 RCW. 88-23-054 (Order 88-25), § 296-24-40501, filed 11/14/88; Order 73-5, § 296-24-40501, filed 5/9/73 and Order 73-4, § 296-24-40501, filed 5/7/73.] Repealed by 02-15-102, filed 7/17/02, effective 10/1/02. Statutory Authority: RCW 49.17.010, [49.17].040, and [49.17].-050.

296-24-40503 Ventilation. [Order 73-5, § 296-24-40503, filed 5/9/73 and Order 73-4, § 296-24-40503, filed 5/7/73.] Repealed by 02-15-102, filed 7/17/02, effective 10/1/02. Statutory Authority: RCW 49.17.010, [49.17].040, and [49.17].050.

296-24-40505 Construction of dip tanks. [Order 73-5, § 296-24-40505, filed 5/9/73 and Order 73-4, § 296-24-40505, filed 5/7/73.] Repealed by 02-15-102, filed 7/17/02, effective 10/1/02. Statutory Authority: RCW 49.17.010, [49.17].040, and [49.17].050.

296-24-40507 Liquids used in dip tanks, storage and handling. [Order 73-5, § 296-24-40507, filed 5/9/73 and Order 73-4, § 296-24-40507, filed 5/7/73.] Repealed by 02-15-102, filed 7/17/02, effective 10/1/02. Statutory Authority: RCW 49.17.010, [49.17].040, and [49.17].050.

296-24-40509 Electrical and other sources of ignition. [Statutory Authority: Chapter 49.17 RCW. 91-24-017 (Order 91-07), § 296-24-40509, filed 11/22/91, effective 12/24/91. Statutory Authority: RCW 49.17.040 and 49.17.050. 85-10-004 (Order 85-09), § 296-24-40509, filed 4/19/85; Order 76-6, § 296-24-40509, filed 3/1/76; Order 73-5, § 296-24-40509, filed 5/9/73 and Order 73-4, § 296-24-40509, filed 5/7/73.] Repealed by 02-15-102, filed 7/17/02, effective 10/1/02. Statutory Authority: RCW 49.17.010, [49.17].040, and [49.17].050.

296-24-40511 Operations and maintenance. [Order 73-5, § 296-24-40511, filed 5/9/73 and Order 73-4, § 296-24-40511, filed 5/7/73.] Repealed by 02-15-102, filed 7/17/02, effective 10/1/02. Statutory Authority: RCW 49.17.-010, [49.17].040, and [49.17].050.

296-24-40513 Extinguishment. [Statutory Authority: RCW 49.17.010, [49.17].040, and [49.17].050. 01-11-038, § 296-24-40513, filed 5/9/01, effective 9/1/01. Statutory Authority: RCW 49.17.040 and 49.17.050. 82-02-003 (Order 81-32), § 296-24-40513, filed 12/24/81; Order 73-5, § 296-24-40513, filed 5/9/73 and Order 73-4, § 296-24-40513, filed 5/7/73.] Repealed by 02-15-102, filed 7/17/02, effective 10/1/02. Statutory Authority: RCW 49.17.010, [49.17].040, and [49.17].050.

296-24-40515 Special dip tank applications. [Order 76-6, § 296-24-40515, filed 3/1/76; Order 74-27, § 296-24-40515, filed 5/7/74; Order 73-5, § 296-24-40515, filed 5/9/73 and Order 73-4, § 296-24-40515, filed 5/7/73.] Repealed by 02-15-102, filed 7/17/02, effective 10/1/02. Statutory Authority: RCW 49.17.010, [49.17].040, and [49.17].-050.

296-24-47515 LP-gas system installations on commercial vehicles. [Statutory Authority: Chapter 49.17 RCW. 94-15-096 (Order 94-07), § 296-24-47515, filed 7/20/94, effective 9/20/94; Order 76-6, § 296-24-47515, filed 3/1/76; Order 73-5, § 296-24-47515, filed 5/9/73 and Order 73-4, § 296-24-47515, filed 5/7/73.] Repealed by 99-17-094, filed 8/17/99, effective 12/1/99. Statutory Authority: RCW 49.17.010, [49.17].040 and [49.17].050.

296-24-510 Storage and handling of anhydrous ammonia. [Order 73-5, § 296-24-510, filed 5/9/73 and Order 73-4, § 296-24-510, filed 5/7/73.] Repealed by 06-10-067, filed 5/2/06, effective 9/1/06. Statutory Authority: RCW 49.17.010, 49.17.040, 49.17.050, 49.17.060. Later promulgation, see chapter 296-826 WAC.

296-24-51001 Scope. [Order 73-5, § 296-24-51001, filed 5/9/73 and Order 73-4, § 296-24-51001, filed 5/7/73.] Repealed by 06-10-067, filed 5/2/06, effective 9/1/06. Statutory Authority: RCW 49.17.010, 49.17.040, 49.17.050, 49.17.060. Later promulgation, see chapter 296-826 WAC.

296-24-51003 General. [Order 73-5, § 296-24-51003, filed 5/9/73 and Order 73-4, § 296-24-51003, filed 5/7/73.] Repealed by 06-10-067, filed 5/2/06, effective 9/1/06. Statutory Authority: RCW 49.17.010, 49.17.040, 49.17.050, 49.17.060. Later promulgation, see chapter 296-826 WAC.

296-24-51005 Definitions. [Statutory Authority: RCW 49.17.010, [49.17].040 and [49.17].050. 99-10-071, § 296-24-51005, filed 5/4/99, effective 9/1/99. Statutory Authority: Chapter 49.17 RCW. 94-15-096 (Order 94-07), § 296-24-51005, filed 7/20/94, effective 9/20/94; Order 74-27, § 296-24-51005, filed 5/7/74; Order 73-5, § 296-24-51005, filed 5/9/73 and Order 73-4, § 296-24-51005, filed 5/7/73.] Repealed by 06-10-067, filed 5/2/06, effective 9/1/06. Statutory Authority: RCW 49.17.010, 49.17.040, 49.17.050, 49.17.060. Later promulgation, see chapter 296-826 WAC.

296-24-51007 Use of water in emergencies. [Order 73-5, § 296-24-51007, filed 5/9/73 and Order 73-4, § 296-24-51007, filed 5/7/73.] Repealed by 06-10-067, filed 5/2/06, effective 9/1/06. Statutory Authority: RCW 49.17.010, 49.17.040, 49.17.050, 49.17.060. Later promulgation, see chapter 296-826 WAC.

296-24-51009 Basic rules. [Statutory Authority: RCW 49.17.010, [49.17].040, [49.17].050. 02-12-098, § 296-24-51009, filed 6/5/02, effective 8/1/02; 99-10-071, § 296-24-51009, filed 5/4/99, effective 9/1/99. Statutory Authority: Chapter 49.17 RCW. 91-24-017 (Order 91-07), § 296-24-51009, filed 11/22/91, effective 12/24/91; 88-23-054 (Order 88-25), § 296-24-51009, filed 11/14/88. Statutory Authority: RCW 49.17.040, 49.17.050,

49.17.240, chapters 43.22 and 42.30 RCW. 80-17-015 (Order 80-21), § 296-24-51009, filed 11/13/80; Order 76-6, § 296-24-51009, filed 3/1/76; Order 74-27, § 296-24-51009, filed 5/7/74; Order 73-5, § 296-24-51009, filed 5/9/73 and Order 73-4, § 296-24-51009, filed 5/7/73.] Repealed by 06-10-067, filed 5/2/06, effective 9/1/06. Statutory Authority: RCW 49.17.010, 49.17.040, 49.17.050, 49.17.060. Later promulgation, see chapter 296-826 WAC.

296-24-51011 Systems utilizing stationary, pier-mounted or skid-mounted aboveground or underground, nonrefrigerated storage. [Statutory Authority: RCW 49.17.010, [49.17].040, [49.17].050. 02-12-098, § 296-24-51011, filed 6/5/02, effective 8/1/02; Order 76-6, § 296-24-51011, filed 3/1/76; Order 73-5, § 296-24-51011, filed 5/9/73 and Order 73-4, § 296-24-51011, filed 5/7/73.] Repealed by 06-10-067, filed 5/2/06, effective 9/1/06. Statutory Authority: RCW 49.17.010, 49.17.040, 49.17.050, 49.17.060. Later promulgation, see chapter 296-826 WAC.

296-24-51013 Refrigerated storage. [Statutory Authority: Chapter 49.17 RCW. 88-23-054 (Order 88-25), § 296-24-51013, filed 11/14/88. Statutory Authority: RCW 49.17.040, 49.17.050, 49.17.240, chapters 43.22 and 42.30 RCW. 80-17-015 (Order 80-21), § 296-24-51013, filed 11/13/80; Order 76-6, § 296-24-51013, filed 3/1/76; Order 73-5, § 296-24-51013, filed 5/9/73 and Order 73-4, § 296-24-51013, filed 5/7/73.] Repealed by 06-10-067, filed 5/2/06, effective 9/1/06. Statutory Authority: RCW 49.17.010, 49.17.040, 49.17.050, 49.17.060. Later promulgation, see chapter 296-826 WAC.

296-24-51015 Systems utilizing portable DOT containers. [Statutory Authority: RCW 49.17.010, [49.17].040, [49.17].050. 02-12-098, § 296-24-51015, filed 6/5/02, effective 8/1/02; Order 73-5, § 296-24-51015, filed 5/9/73 and Order 73-4, § 296-24-51015, filed 5/7/73.] Repealed by 06-10-067, filed 5/2/06, effective 9/1/06. Statutory Authority: RCW 49.17.010, 49.17.040, 49.17.050, 49.17.060. Later promulgation, see chapter 296-826 WAC.

296-24-51017 Systems mounted on trucks, semi-trailers, and trailers for transportation of ammonia. [Statutory Authority: RCW 49.17.010, [49.17].040 and [49.17].050. 99-17-094, § 296-24-51017, filed 8/17/99, effective 12/1/99. Statutory Authority: RCW 49.17.040, 49.17.050, 49.17.240, chapters 43.22 and 42.30 RCW. 80-17-015 (Order 80-21), § 296-24-51017, filed 11/13/80; Order 76-6, § 296-24-51017, filed 3/1/76; Order 73-5, § 296-24-51017, filed 5/9/73 and Order 73-4, § 296-24-51017, filed 5/7/73.] Repealed by 06-10-067, filed 5/2/06, effective 9/1/06. Statutory Authority: RCW 49.17.010, 49.17.040, 49.17.050, 49.17.060. Later promulgation, see chapter 296-826 WAC.

296-24-51019 Systems mounted on farm wagons (implements of husbandry) for the transportation of ammonia. [Order 73-5, § 296-24-51019, filed 5/9/73 and Order 73-4, § 296-24-51019, filed 5/7/73.] Repealed by 06-10-067, filed 5/2/06, effective 9/1/06. Statutory Authority: RCW 49.17.010, 49.17.040, 49.17.050, 49.17.060. Later promulgation, see chapter 296-826 WAC.

296-24-51021 Systems mounted on farm equipment (implements of husbandry) for the application of ammonia. [Statutory Authority: RCW 49.17.040, 49.17.050, 49.17.240, chapters 43.22 and 42.30 RCW. 80-17-015 (Order 80-21), § 296-24-51021, filed 11/13/80; Order 73-5, § 296-24-51021, filed 5/9/73 and Order 73-4, § 296-24-51021, filed 5/7/73.] Repealed by 06-10-067, filed 5/2/06, effective 9/1/06. Statutory Authority: RCW 49.17.010, 49.17.040, 49.17.050, 49.17.060. Later promulgation, see chapter 296-826 WAC.

296-24-51099 Appendix C—Availability of reference material. [Statutory Authority: Chapter 49.17 RCW. 94-15-096 (Order 94-07), § 296-24-51099, filed 7/20/94, effective 9/20/94; Order 76-6, § 296-24-51099, filed 3/1/76.] Repealed by 06-10-067, filed 5/2/06, effective 9/1/06. Statutory Authority: RCW 49.17.010, 49.17.040, 49.17.050, 49.17.060. Later promulgation, see chapter 296-826 WAC.

296-24-550 Means of egress. [Statutory Authority: Chapter 49.17 RCW. 90-03-029 (Order 89-20), § 296-24-550, filed 1/11/90, effective 2/26/90; Order 73-5, § 296-24-550, filed 5/9/73 and Order 73-4, § 296-24-550, filed 5/7/73.] Repealed by 01-11-038, filed 5/9/01, effective 9/1/01. Statutory Authority: RCW 49.17.010, [49.17].040, and [49.17].050.

296-24-55003 General requirements. [Order 73-5, § 296-24-55003, filed 5/9/73 and Order 73-4, § 296-24-55003, filed 5/7/73.] Repealed by 01-11-038, filed 5/9/01, effective 9/1/01. Statutory Authority: RCW 49.17.010, [49.17].-040, and [49.17].050.

296-24-55005 Fundamental requirements. [Order 74-27, § 296-24-55005, filed 5/7/74; Order 73-5, § 296-24-55005, filed 5/9/73 and Order 73-4, § 296-24-55005, filed 5/7/73.] Repealed by 01-11-038, filed 5/9/01, effective 9/1/01. Statutory Authority: RCW 49.17.010, [49.17].040, and [49.17].050.

296-24-55007 Protection of employees exposed by construction and repair operations. [Order 73-5, § 296-24-55007, filed 5/9/73 and Order 73-4, § 296-24-55007, filed 5/7/73.] Repealed by 01-11-038, filed 5/9/01, effective 9/1/01. Statutory Authority: RCW 49.17.010, [49.17].040, and [49.17].050.

296-24-55009 Maintenance. [Order 73-5, § 296-24-55009, filed 5/9/73 and Order 73-4, § 296-24-55009, filed 5/7/73.] Repealed by 01-11-038, filed 5/9/01, effective 9/1/01. Statutory Authority: RCW 49.17.010, [49.17].040, and [49.17].050.

296-24-565 Means of egress, general. [Order 73-5, § 296-24-565, filed 5/9/73 and Order 73-4, § 296-24-565, filed 5/7/73.] Repealed by 01-11-038, filed 5/9/01, effective 9/1/01. Statutory Authority: RCW 49.17.010, [49.17].040, and [49.17].050.

296-24-56501 Permissible exit components. [Order 73-5, § 296-24-56501, filed 5/9/73 and Order 73-4, § 296-24-56501, filed 5/7/73.] Repealed by 01-11-038, filed 5/9/01, effective 9/1/01. Statutory Authority: RCW 49.17.010, [49.17].040, and [49.17].050.

296-24-56503 Protective enclosure of exits. [Order 73-5, § 296-24-56503, filed 5/9/73 and Order 73-4, § 296-24-56503, filed 5/7/73.] Repealed by 01-11-038, filed 5/9/01, effective 9/1/01. Statutory Authority: RCW 49.17.010, [49.17].040, and [49.17].050.

296-24-56505 Width and capacity of means of egress. [Order 73-5, § 296-24-56505, filed 5/9/73 and Order 73-4, § 296-24-56505, filed 5/7/73.] Repealed by 01-11-038, filed 5/9/01, effective 9/1/01. Statutory Authority: RCW 49.17.010, [49.17].040, and [49.17].050.

296-24-56507 Egress capacity and occupant load. [Order 73-5, § 296-24-56507, filed 5/9/73 and Order 73-4, § 296-24-56507, filed 5/7/73.] Repealed by 01-11-038, filed 5/9/01, effective 9/1/01. Statutory Authority: RCW 49.17.010, [49.17].040, and [49.17].050.

296-24-56509 Arrangement of exits. [Order 73-5, § 296-24-56509, filed 5/9/73 and Order 73-4, § 296-24-56509, filed 5/7/73.] Repealed by 01-11-038, filed 5/9/01, effective 9/1/01. Statutory Authority: RCW 49.17.010, [49.17].-040, and [49.17].050.

296-24-56511 Access to exits. [Order 73-5, § 296-24-56511, filed 5/9/73 and Order 73-4, § 296-24-56511, filed 5/7/73.] Repealed by 01-11-038, filed 5/9/01, effective 9/1/01. Statutory Authority: RCW 49.17.010, [49.17].040, and [49.17].050.

296-24-56513 Exterior ways of exit access. [Statutory Authority: Chapter 49.17 RCW. 88-23-054 (Order 88-25), § 296-24-56513, filed 11/14/88; Order 73-5, § 296-24-56513, filed 5/9/73 and Order 73-4, § 296-24-56513, filed 5/7/73.] Repealed by 01-11-038, filed 5/9/01, effective 9/1/01. Statutory Authority: RCW 49.17.010, [49.17].-040, and [49.17].050.

296-24-56515 Discharge from exits. [Statutory Authority: Chapter 49.17 RCW. 94-15-096 (Order 94-07), § 296-24-56515, filed 7/20/94, effective 9/20/94; Order 73-5, § 296-24-56515, filed 5/9/73 and Order 73-4, § 296-24-56515, filed 5/7/73.] Repealed by 01-11-038, filed 5/9/01, effective 9/1/01. Statutory Authority: RCW 49.17.010, [49.17].040, and [49.17].050.

296-24-56517 Headroom. [Order 73-5, § 296-24-56517, filed 5/9/73 and Order 73-4, § 296-24-56517, filed 5/7/73.] Repealed by 01-11-038, filed 5/9/01, effective 9/1/01. Statutory Authority: RCW 49.17.010, [49.17].040, and [49.17].050.

296-24-56519 Changes in elevation. [Order 73-5, § 296-24-56519, filed 5/9/73 and Order 73-4, § 296-24-56519, filed 5/7/73.] Repealed by 01-11-038, filed 5/9/01, effective 9/1/01. Statutory Authority: RCW 49.17.010, [49.17].-040, and [49.17].050.

296-24-56521 Maintenance and workmanship. [Order 73-5, § 296-24-56521, filed 5/9/73 and Order 73-4, § 296-24-56521, filed 5/7/73.] Repealed by 01-11-038, filed 5/9/01, effective 9/1/01. Statutory Authority: RCW 49.17.010, [49.17].040, and [49.17].050.

296-24-56523 Furnishings and decorations. [Order 73-5, § 296-24-56523, filed 5/9/73 and Order 73-4, § 296-24-56523, filed 5/7/73.] Repealed by 01-11-038, filed 5/9/01, effective 9/1/01. Statutory Authority: RCW 49.17.010, [49.17].040, and [49.17].050.

296-24-56529 Fire retardant paints. [Order 73-5, § 296-24-56529, filed 5/9/73 and Order 73-4, § 296-24-56529, filed 5/7/73.] Repealed by 01-11-038, filed 5/9/01, effective 9/1/01. Statutory Authority: RCW 49.17.010, [49.17].040, and [49.17].050.

296-24-56531 Exit marking. [Order 73-5, § 296-24-56531, filed 5/9/73 and Order 73-4, § 296-24-56531, filed 5/7/73.] Repealed by 01-11-038, filed 5/9/01, effective 9/1/01. Statutory Authority: RCW 49.17.010, [49.17].040, and [49.17].050.

296-24-58505 Fire brigades. [Statutory Authority: RCW 49.17.040. 99-05-080, § 296-24-58505, filed 2/17/99, effective 6/1/99. Statutory Authority: RCW 49.17.040 and 49.17.050. 82-02-003 (Order 81-32), § 296-24-58505, filed 12/24/81.] Repealed by 06-01-073, filed 12/20/05, effective 3/1/06. Statutory Authority: RCW 49.17.010, 49.17.040, 49.17.050, 49.17.060. Later promulgation, see chapter 296-811 WAC.

296-24-58507 Organization. [Statutory Authority: RCW 49.17.040 and 49.17.050. 82-02-003 (Order 81-32), § 296-24-58507, filed 12/24/81.] Repealed by 06-01-073, filed 12/20/05, effective 3/1/06. Statutory Authority: RCW 49.17.010, 49.17.040, 49.17.050, 49.17.060. Later promulgation, see chapter 296-811 WAC.

296-24-58509 Training and education. [Statutory Authority: RCW 49.17.040 and 49.17.050. 82-02-003 (Order 81-32), § 296-24-58509, filed 12/24/81.] Repealed by 06-01-073, filed 12/20/05, effective 3/1/06. Statutory Authority: RCW 49.17.010, 49.17.040, 49.17.050, 49.17.060. Later promulgation, see chapter 296-811 WAC.

296-24-58511 Firefighting equipment. [Statutory Authority: RCW 49.17.040 and 49.17.050. 82-02-003 (Order 81-32), § 296-24-58511, filed 12/24/81.] Repealed by 06-01-073, filed 12/20/05, effective 3/1/06. Statutory Authority: RCW 49.17.010, 49.17.040, 49.17.050, 49.17.060. Later promulgation, see chapter 296-811 WAC.

296-24-58513 Protective clothing. [Statutory Authority: RCW 49.17.-010, 49.17.040, 49.17.050, 49.17.060. 05-03-093, § 296-24-58513, filed 1/18/05, effective 3/1/05. Statutory Authority: RCW 49.17.010, [49.17].040, and [49.17].-050. 01-11-038, § 296-24-58513, filed 5/9/01, effective 9/1/01; 99-10-071, § 296-24-58513, filed 5/4/99, effective 9/1/99. Statutory Authority: Chapter 49.17 RCW. 94-15-096 (Order 94-07), § 296-24-58513, filed 7/20/94, effective 9/20/94; 92-23-017 (Order 92-13), § 296-24-58513, filed 11/10/92, effective 12/18/92; 90-03-029 (Order 89-20), § 296-24-58513, filed 1/11/90, effective 2/26/90; 88-14-108 (Order 88-11), § 296-24-58513, filed 7/6/88; 87-24-051 (Order 87-24), § 296-24-58513, filed 11/30/87. Statutory Authority: RCW 49.17.040 and 49.17.050. 82-02-003 (Order 81-32), § 296-24-58513, filed 12/24/81.] Repealed by 06-01-073, filed 12/20/05, effective 3/1/06. Statutory Authority: RCW 49.17.010, 49.17.040, 49.17.050, 49.17.060. Later promulgation, see chapter 296-811 WAC.

296-24-58515 Respiratory protection devices. [Statutory Authority: RCW 49.17.010, 49.17.040, 49.17.050, 49.17.060. 05-03-093, § 296-24-58515, filed 1/18/05, effective 3/1/05. Statutory Authority: RCW 49.17.010, [49.17].040 and [49.17].050. 99-10-071, § 296-24-58515, filed 5/4/99, effective 9/1/99. Statutory Authority: Chapter 49.17 RCW. 94-15-096 (Order 94-07), § 296-24-58515, filed 7/20/94, effective 9/20/94. Statutory Authority: RCW 49.17.040 and 49.17.050. 82-02-003 (Order 81-32), § 296-24-58515, filed 12/24/81.] Repealed by 06-01-073, filed 12/20/05, effective 3/1/06. Statutory Authority: RCW 49.17.010, 49.17.040, 49.17.050, 49.17.060. Later promulgation, see chapter 296-811 WAC.

296-24-58516 Procedures for interior structural firefighting. [Statutory Authority: RCW 49.17.010, [49.17].040 and [49.17].-050. 99-10-071, § 296-24-58516, filed 5/4/99, effective 9/1/99.] Repealed by 06-01-073, filed 12/20/05, effective 3/1/06. Statutory Authority: RCW 49.17.010, 49.17.040, 49.17.050, 49.17.060. Later promulgation, see chapter 296-811 WAC.

296-24-58517 Appendix A—Fire brigades. [Statutory Authority: RCW 49.17.010, 49.17.040, 49.17.050, 49.17.060. 05-03-093, § 296-24-58517, filed 1/18/05, effective 3/1/05. Statutory Authority: RCW 49.17.010, [49.17].040, and [49.17].050. 01-11-038, § 296-24-58517, filed 5/9/01, effective 9/1/01; 99-10-071, § 296-24-58517, filed 5/4/99, effective 9/1/99. Statutory Authority: Chapter 49.17 RCW. 94-15-096 (Order 94-07), § 296-24-58517, filed 7/20/94, effective 9/20/94. Statutory Authority: RCW 49.17.040 and 49.17.050. 82-02-003 (Order 81-32), § 296-24-58517, filed 12/24/81.] Repealed by 06-01-073, filed 12/20/05, effective 3/1/06. Statutory Authority: RCW 49.17.010, 49.17.040, 49.17.050, 49.17.060. Later promulgation, see chapter 296-811 WAC.

296-24-590 Portable fire suppression equipment—Portable fire extinguishers. [Order 73-5, § 296-24-590, filed 5/9/73 and Order 73-4, § 296-24-590, filed 5/7/73.] Repealed by 88-11-021 (Order 88-04), filed 5/11/88. Statutory Authority: Chapter 49.17 RCW.

296-24-59001 General requirements. [Order 73-5, § 296-24-59001, filed 5/9/73 and Order 73-4, § 296-24-59001, filed 5/7/73.] Repealed by 87-24-051 (Order 87-24), filed 11/30/87. Statutory Authority: Chapter 49.17 RCW.

296-24-59003 Selection of extinguishers. [Order 74-27, § 296-24-59003, filed 5/7/74; Order 73-5, § 296-24-59003, filed 5/9/73 and Order 73-4, § 296-24-59003, filed 5/7/73.] Repealed by 87-24-051 (Order 87-24), filed 11/30/87. Statutory Authority: Chapter 49.17 RCW.

296-24-59005 Distribution of portable fire extinguishers. [Order 73-5, § 296-24-59005, filed 5/9/73 and Order 73-4, § 296-24-59005, filed 5/7/73.] Repealed by 87-24-051 (Order 87-24), filed 11/30/87. Statutory Authority: Chapter 49.17 RCW.

296-24-59007 Inspection, maintenance, and hydrostatic tests. [Order 74-27, § 296-24-59007, filed 5/7/74; Order 73-5, § 296-24-59007, filed 5/9/73 and Order 73-4, § 296-24-59007, filed 5/7/73.] Repealed by 87-24-051 (Order 87-24), filed 11/30/87. Statutory Authority: Chapter 49.17 RCW.

296-24-59203 Exemptions. [Statutory Authority: RCW 49.17.040 and 49.17.050. 82-02-003 (Order 81-32), § 296-24-59203, filed 12/24/81.] Repealed by 01-17-033, filed 8/8/01, effective 9/1/01. Statutory Authority: RCW 49.17.010, [49.17].040, and [49.17].050.

296-24-59205 General requirements. [Statutory Authority: RCW 49.17.040 and 49.17.050. 82-02-003 (Order 81-32), § 296-24-59205, filed 12/24/81.] Repealed by 01-11-038, filed 5/9/01, effective 9/1/01. Statutory Authority: RCW 49.17.010, [49.17].040, and [49.17].050.

296-24-59207 Selection and distribution. [Statutory Authority: RCW 49.17.040 and 49.17.050. 82-02-003 (Order 81-32), § 296-24-59207, filed 12/24/81.] Repealed by 01-11-038, filed 5/9/01, effective 9/1/01. Statutory Authority: RCW 49.17.010, [49.17].040, and [49.17].050.

296-24-59209 Inspection, maintenance and testing. [Statutory Authority: RCW 49.17.040 and 49.17.050. 82-02-003 (Order 81-32), § 296-24-59209, filed 12/24/81.] Repealed by 01-11-038, filed 5/9/01, effective 9/1/01. Statutory Authority: RCW 49.17.010, [49.17].040, and [49.17].-050.

296-24-59211 Hydrostatic testing. [Statutory Authority: Chapter 49.17 RCW. 92-23-017 (Order 92-13), § 296-24-59211, filed 11/10/92, effective 12/18/92; 87-24-051 (Order 87-24), § 296-24-59211, filed 11/30/87. Statutory Authority: RCW 49.17.040 and 49.17.050. 82-02-003 (Order 81-32), § 296-24-59211, filed 12/24/81.] Repealed by 01-11-038, filed 5/9/01, effective 9/1/01. Statutory Authority: RCW 49.17.010, [49.17].040, and [49.17].050.

296-24-59213 Training and education. [Statutory Authority: RCW 49.17.040 and 49.17.050. 82-02-003 (Order 81-32), § 296-24-59213, filed 12/24/81.] Repealed by 01-11-038, filed 5/9/01, effective 9/1/01. Statutory Authority: RCW 49.17.010, [49.17].040, and [49.17].050.

296-24-600 Standpipe and hose systems. [Order 73-5, § 296-24-600, filed 5/9/73 and Order 73-4, § 296-24-600, filed 5/7/73.] Repealed by 87-24-051 (Order 87-24), filed 11/30/87. Statutory Authority: Chapter 49.17 RCW.

296-24-60001 General requirements. [Order 73-5, § 296-24-60001, filed 5/9/73 and Order 73-4, § 296-24-60001, filed

5/7/73.] Repealed by 87-24-051 (Order 87-24), filed 11/30/87. Statutory Authority: Chapter 49.17 RCW.

296-24-60003 Hose outlets. [Order 74-27, § 296-24-60003, filed 5/7/74; Order 73-5, § 296-24-60003, filed 5/9/73 and Order 73-4, § 296-24-60003, filed 5/7/73.] Repealed by 87-24-051 (Order 87-24), filed 11/30/87. Statutory Authority: Chapter 49.17 RCW.

296-24-60005 Water supplies. [Order 73-5, § 296-24-60005, filed 5/9/73 and Order 73-4, § 296-24-60005, filed 5/7/73.] Repealed by 87-24-051 (Order 87-24), filed 11/30/87. Statutory Authority: Chapter 49.17 RCW.

296-24-60007 Tests and maintenance. [Order 73-5, § 296-24-60007, filed 5/9/73 and Order 73-4, § 296-24-60007, filed 5/7/73.] Repealed by 87-24-051 (Order 87-24), filed 11/30/87. Statutory Authority: Chapter 49.17 RCW.

296-24-605 Fixed fire suppression equipment—Automatic sprinkler systems. [Order 73-5, § 296-24-605, filed 5/9/73 and Order 73-4, § 296-24-605, filed 5/7/73.] Repealed by 88-11-021 (Order 88-04), filed 5/11/88. Statutory Authority: Chapter 49.17 RCW.

296-24-60501 General requirements. [Order 73-5, § 296-24-60501, filed 5/9/73 and Order 73-4, § 296-24-60501, filed 5/7/73.] Repealed by 87-24-051 (Order 87-24), filed 11/30/87. Statutory Authority: Chapter 49.17 RCW.

296-24-60503 Fire department connections. [Order 73-5, § 296-24-60503, filed 5/9/73 and Order 73-4, § 296-24-60503, filed 5/7/73.] Repealed by 87-24-051 (Order 87-24), filed 11/30/87. Statutory Authority: Chapter 49.17 RCW.

296-24-60505 Sprinkler alarms. [Order 73-5, § 296-24-60505, filed 5/9/73 and Order 73-4, § 296-24-60505, filed 5/7/73.] Repealed by 87-24-051 (Order 87-24), filed 11/30/87. Statutory Authority: Chapter 49.17 RCW.

296-24-60507 Maintenance of sprinkler system. [Order 76-6, § 296-24-60507, filed 3/1/76; Order 73-5, § 296-24-60507, filed 5/9/73 and Order 73-4, § 296-24-60507, filed 5/7/73.] Repealed by 87-24-051 (Order 87-24), filed 11/30/87. Statutory Authority: Chapter 49.17 RCW.

296-24-60509 Sprinkler head clearance. [Order 73-5, § 296-24-60509, filed 5/9/73 and Order 73-4, § 296-24-60509, filed 5/7/73.] Repealed by 87-24-051 (Order 87-24), filed 11/30/87. Statutory Authority: Chapter 49.17 RCW.

296-24-615 Fixed dry chemical extinguishing systems. [Order 73-5, § 296-24-615, filed 5/9/73 and Order 73-4, § 296-24-615, filed 5/7/73.] Repealed by 87-24-051 (Order 87-24), filed 11/30/87. Statutory Authority: Chapter 49.17 RCW.

296-24-61501 General requirements. [Order 73-5, § 296-24-61501, filed 5/9/73 and Order 73-4, § 296-24-61501, filed 5/7/73.] Repealed by 87-24-051 (Order 87-24), filed 11/30/87. Statutory Authority: Chapter 49.17 RCW.

296-24-61503 Alarms and indicators. [Order 74-27, § 296-24-61503, filed 5/7/74; Order 73-5, § 296-24-61503, filed 5/9/73 and Order 73-4, § 296-24-61503, filed 5/7/73.] Repealed by 87-24-051 (Order 87-24), filed 11/30/87. Statutory Authority: Chapter 49.17 RCW.

296-24-61505 Inspection and maintenance. [Order 76-6, § 296-24-61505, filed 3/1/76; Order 73-5, § 296-24-61505, filed 5/9/73 and Order 73-4, § 296-24-61505, filed 5/7/73.] Repealed by 87-24-051 (Order 87-24), filed 11/30/87. Statutory Authority: Chapter 49.17 RCW.

296-24-620 Carbon dioxide extinguishing systems. [Order 73-5, § 296-24-620, filed 5/9/73 and Order 73-4, § 296-24-620, filed 5/7/73.] Repealed by 87-24-051 (Order 87-24), filed 11/30/87. Statutory Authority: Chapter 49.17 RCW.

296-24-62001 General requirements. [Order 73-5, § 296-24-62001, filed 5/9/73 and Order 73-4, § 296-24-62001, filed 5/7/73.] Repealed by 87-24-051 (Order 87-24), filed 11/30/87. Statutory Authority: Chapter 49.17 RCW.

296-24-62003 Inspection and maintenance. [Order 74-27, § 296-24-62003, filed 5/7/74; Order 73-5, § 296-24-62003, filed 5/9/73 and Order 73-4, § 296-24-62003, filed 5/7/73.] Repealed by 87-24-051 (Order 87-24), filed 11/30/87. Statutory Authority: Chapter 49.17 RCW.

296-24-625 Local fire alarm signaling systems. [Order 74-27, § 296-24-625, filed 5/7/74.] Repealed by 87-24-051 (Order 87-24), filed 11/30/87. Statutory Authority: Chapter 49.17 RCW.

296-24-631 Employee alarm systems. [Statutory Authority: RCW 49.17.040 and 49.17.050. 82-02-003 (Order 81-32), § 296-24-631, filed 12/24/81.] Repealed by 01-17-033, filed 8/8/01, effective 9/1/01. Statutory Authority: RCW 49.17.010, [49.17].040, and [49.17].050.

296-24-63101 Scope and application. [Statutory Authority: RCW 49.17.040 and 49.17.050. 82-02-003 (Order 81-32), § 296-24-63101, filed 12/24/81.] Repealed by 01-17-033, filed 8/8/01, effective 9/1/01. Statutory Authority: RCW 49.17.010, [49.17].040, and [49.17].050.

296-24-63103 General requirements. [Statutory Authority: RCW 49.17.040 and 49.17.050. 82-02-003 (Order 81-32), § 296-24-63103, filed 12/24/81.] Repealed by 01-17-033, filed 8/8/01, effective 9/1/01. Statutory Authority: RCW 49.17.010, [49.17].040, and [49.17].050.

296-24-63105 Installation and restoration. [Statutory Authority: RCW 49.17.040 and 49.17.050. 82-02-003 (Order 81-32), § 296-24-63105, filed 12/24/81.] Repealed by 01-17-033, filed 8/8/01, effective 9/1/01. Statutory Authority: RCW 49.17.010, [49.17].040, and [49.17].050.

296-24-63107 Maintenance and testing. [Statutory Authority: RCW 49.17.040 and 49.17.050. 82-02-003 (Order 81-32), § 296-24-63107, filed 12/24/81.] Repealed by 01-17-033, filed 8/8/01, effective 9/1/01. Statutory Authority: RCW 49.17.010, [49.17].040, and [49.17].050.

296-24-63109 Manual operation. [Statutory Authority: RCW 49.17.040 and 49.17.050. 82-02-003 (Order 81-32), § 296-24-63109, filed 12/24/81.] Repealed by 01-17-033, filed 8/8/01, effective 9/1/01. Statutory Authority: RCW 49.17.010, [49.17].040, and [49.17].050.

296-24-63199 Appendix A—Employee alarm systems. [Statutory Authority: RCW 49.17.040 and 49.17.050. 82-02-003 (Order 81-32), § 296-24-63199, filed 12/24/81.] Repealed by 01-17-033, filed 8/8/01, effective 9/1/01. Statutory Authority: RCW 49.17.010, [49.17].040, and [49.17].050.

296-24-650 Hand and portable powered tools and equipment—General. [Order 73-5, § 296-24-650, filed 5/9/73 and Order 73-4, § 296-24-650, filed 5/7/73.] Repealed by 03-09-009, filed 4/4/03, effective 8/1/03. Statutory Authority: RCW 49.17.010, [49.17].040, [49.17].050, and [49.17].-060. Later promulgation, see chapter 296-807 WAC.

296-24-65001 General requirements. [Order 73-5, § 296-24-65001, filed 5/9/73 and Order 73-4, § 296-24-65001, filed 5/7/73.] Repealed by 01-11-038, filed 5/9/01, effective 9/1/01. Statutory Authority: RCW 49.17.010, [49.17].040, and [49.17].050.

296-24-65003 Compressed air used for cleaning. [Order 73-5, § 296-24-65003, filed 5/9/73 and Order 73-4, § 296-24-65003, filed 5/7/73.] Repealed by 03-09-009, filed 4/4/03, effective 8/1/03. Statutory Authority: RCW 49.17.010, [49.17].040, [49.17].050, and [49.17].060. Later promulgation, see chapter 296-807 WAC.

296-24-65005 Compressed air tools. [Order 73-5, § 296-24-65005, filed 5/9/73 and Order 73-4, § 296-24-65005, filed 5/7/73.] Repealed by 03-09-009, filed 4/4/03, effective 8/1/03. Statutory Authority: RCW 49.17.010, [49.17].-040, [49.17].050, and [49.17].060. Later promulgation, see chapter 296-807 WAC.

296-24-65007 Air hammer. [Order 73-5, § 296-24-65007, filed 5/9/73 and Order 73-4, § 296-24-65007, filed 5/7/73.] Repealed by 03-09-009, filed 4/4/03, effective 8/1/03. Statutory Authority: RCW 49.17.010, [49.17].040, [49.17].050, and [49.17].060. Later promulgation, see chapter 296-807 WAC.

296-24-655 Guarding of portable powered tools. [Order 73-5, § 296-24-655, filed 5/9/73 and Order 73-4, § 296-24-655, filed 5/7/73.] Repealed by 03-09-009, filed 4/4/03, effective 8/1/03. Statutory Authority: RCW 49.17.010, [49.17].040, [49.17].050, and [49.17].060. Later promulgation, see chapter 296-807 WAC.

296-24-65501 Portable powered tools. [Statutory Authority: RCW 49.17.010, [49.17].040, and [49.17].050. 01-11-038, § 296-24-65501, filed 5/9/01, effective 9/1/01. Statutory Authority: Chapter 49.17 RCW. 94-15-096 (Order 94-07), § 296-24-65501, filed 7/20/94, effective 9/20/94; 91-24-017 (Order 91-07), § 296-24-65501, filed 11/22/91, effective 12/24/91. Statutory Authority: RCW 49.17.040, 49.17.050, 49.17.240, chapters 43.22 and 42.30 RCW. 80-17-015 (Order 80-21), § 296-24-65501, filed 11/13/80; Order 74-27, § 296-24-65501, filed 5/7/74; Order 73-5, § 296-24-65501, filed 5/9/73 and Order 73-4, § 296-24-65501, filed 5/7/73.] Repealed by 03-09-009, filed 4/4/03, effective 8/1/03. Statutory Authority: RCW 49.17.010, [49.17].040, [49.17].050, and [49.17].060. Later promulgation, see chapter 296-807 WAC.

296-24-657 Pneumatic powered tools and hose. [Order 73-5, § 296-24-657, filed 5/9/73 and Order 73-4, § 296-24-657, filed

5/7/73.] Repealed by 03-09-009, filed 4/4/03, effective 8/1/03. Statutory Authority: RCW 49.17.010, [49.17].040, [49.17].050, and [49.17].060. Later promulgation, see chapter 296-807 WAC.

296-24-65701 Portable tools. [Order 73-5, § 296-24-65701, filed 5/9/73 and Order 73-4, § 296-24-65701, filed 5/7/73.] Repealed by 03-09-009, filed 4/4/03, effective 8/1/03. Statutory Authority: RCW 49.17.010, [49.17].040, [49.17].050, and [49.17].060. Later promulgation, see chapter 296-807 WAC.

296-24-65703 Airhose. [Order 73-5, § 296-24-65703, filed 5/9/73 and Order 73-4, § 296-24-65703, filed 5/7/73.] Repealed by 03-09-009, filed 4/4/03, effective 8/1/03. Statutory Authority: RCW 49.17.010, [49.17].040, [49.17].050, and [49.17].060. Later promulgation, see chapter 296-807 WAC.

296-24-660 Portable abrasive wheels. [Order 73-5, § 296-24-660, filed 5/9/73 and Order 73-4, § 296-24-660, filed 5/7/73.] Repealed by 03-09-009, filed 4/4/03, effective 8/1/03. Statutory Authority: RCW 49.17.010, [49.17].040, [49.17].050, and [49.17].060. Later promulgation, see chapter 296-807 WAC.

296-24-66001 Abrasive wheel terms. [Order 73-5, § 296-24-66001, filed 5/9/73 and Order 73-4, § 296-24-66001, filed 5/7/73.] Repealed by 03-09-009, filed 4/4/03, effective 8/1/03. Statutory Authority: RCW 49.17.010, [49.17].040, [49.17].050, and [49.17].060. Later promulgation, see chapter 296-807 WAC.

296-24-66003 General requirements. [Order 74-27, § 296-24-66003, filed 5/7/74; Order 73-5, § 296-24-66003, filed 5/9/73 and Order 73-4, § 296-24-66003, filed 5/7/73.] Repealed by 03-09-009, filed 4/4/03, effective 8/1/03. Statutory Authority: RCW 49.17.010, [49.17].040, [49.17].050, and [49.17].060. Later promulgation, see chapter 296-807 WAC.

296-24-66005 Cup wheels. [Order 73-5, § 296-24-66005, filed 5/9/73 and Order 73-4, § 296-24-66005, filed 5/7/73.] Repealed by 03-09-009, filed 4/4/03, effective 8/1/03. Statutory Authority: RCW 49.17.010, [49.17].040, [49.17].050, and [49.17].060. Later promulgation, see chapter 296-807 WAC.

296-24-66007 Vertical portable grinders. [Order 73-5, § 296-24-66007, filed 5/9/73 and Order 73-4, § 296-24-66007, filed 5/7/73.] Repealed by 03-09-009, filed 4/4/03, effective 8/1/03. Statutory Authority: RCW 49.17.010, [49.17].040, [49.17].050, and [49.17].060. Later promulgation, see chapter 296-807 WAC.

296-24-66009 Other portable grinders. [Order 73-5, § 296-24-66009, filed 5/9/73 and Order 73-4, § 296-24-66009, filed 5/7/73.] Repealed by 03-09-009, filed 4/4/03, effective 8/1/03. Statutory Authority: RCW 49.17.010, [49.17].040, [49.17].050, and [49.17].060. Later promulgation, see chapter 296-807 WAC.

296-24-66011 Mounting and inspection of abrasive wheels. [Order 74-27, § 296-24-66011, filed 5/7/74; Order 73-5, § 296-24-66011, filed 5/9/73 and Order 73-4, § 296-24-66011, filed 5/7/73.] Repealed by 03-09-009, filed 4/4/03, effective 8/1/03. Statutory Authority: RCW 49.17.010, [49.17].040, [49.17].050, and [49.17].060. Later promulgation, see chapter 296-807 WAC.

296-24-662 Safety requirements for explosive-actuated fastening tools. [Order 73-5, § 296-24-662, filed 5/9/73 and Order 73-4, § 296-24-662, filed 5/7/73.] Repealed by 79-08-115 (Order 79-9), filed 7/31/79. Statutory Authority: RCW 49.17.040, 49.17.150, and 49.17.240.

296-24-66201 Scope. [Order 73-5, § 296-24-66201, filed 5/9/73 and Order 73-4, § 296-24-66201, filed 5/7/73.] Repealed by 79-08-115 (Order 79-9), filed 7/31/79. Statutory Authority: RCW 49.17.040, 49.17.150, and 49.17.240.

296-24-66203 Purpose. [Order 73-5, § 296-24-66203, filed 5/9/73 and Order 73-4, § 296-24-66203, filed 5/7/73.] Repealed by 79-08-115 (Order 79-9), filed 7/31/79. Statutory Authority: RCW 49.17.040, 49.17.150, and 49.17.240.

296-24-66205 Definitions. [Order 73-5, § 296-24-66205, filed 5/9/73 and Order 73-4, § 296-24-66205, filed 5/7/73.] Repealed by 79-08-115 (Order 79-9), filed 7/31/79. Statutory Authority: RCW 49.17.040, 49.17.150, and 49.17.240.

296-24-66207 Design requirements—High velocity tools. [Order 73-5, § 296-24-66207, filed 5/9/73 and Order 73-4, § 296-24-66207, filed 5/7/73.] Repealed by 79-08-115 (Order 79-9), filed 7/31/79. Statutory Authority: RCW 49.17.040, 49.17.150, and 49.17.240.

296-24-66209 Low velocity piston tools. [Order 73-5, § 296-24-66209, filed 5/9/73 and Order 73-4, § 296-24-66209, filed 5/7/73.] Repealed by 79-08-115 (Order 79-9), filed 7/31/79. Statutory Authority: RCW 49.17.040, 49.17.150, and 49.17.240.

296-24-66211 Hammer-operated piston tools—Low velocity type. [Order 73-5, § 296-24-66211, filed 5/9/73 and Order 73-4, § 296-24-66211, filed 5/7/73.] Repealed by 79-08-115 (Order 79-9), filed 7/31/79. Statutory Authority: RCW 49.17.040, 49.17.150, and 49.17.240.

296-24-66213 Requirements for loads and fasteners. [Order 73-5, § 296-24-66213, filed 5/9/73 and Order 73-4, § 296-24-66213, filed 5/7/73.] Repealed by 79-08-115 (Order 79-9), filed 7/31/79. Statutory Authority: RCW 49.17.040, 49.17.150, and 49.17.240.

296-24-66215 Approvals. [Order 73-5, § 296-24-66215, filed 5/9/73 and Order 73-4, § 296-24-66215, filed 5/7/73.] Repealed by 79-08-115 (Order 79-9), filed 7/31/79. Statutory Authority: RCW 49.17.040, 49.17.150, and 49.17.240.

296-24-66217 Operation. [Order 73-5, § 296-24-66217, filed 5/9/73 and Order 73-4, § 296-24-66217, filed 5/7/73.] Repealed by 79-08-115 (Order 79-9), filed 7/31/79. Statutory Authority: RCW 49.17.040, 49.17.150, and 49.17.240.

296-24-66219 Servicing. [Order 73-5, § 296-24-66219, filed 5/9/73 and Order 73-4, § 296-24-66219, filed 5/7/73.] Repealed by 79-08-115 (Order 79-9), filed 7/31/79. Statutory Authority: RCW 49.17.040, 49.17.150, and 49.17.240.

296-24-66221 Qualification and certification of operators. [Order 73-5, § 296-24-66221, filed 5/9/73 and Order 73-4, § 296-24-66221, filed 5/7/73.] Repealed by 79-08-115 (Order 79-9), filed 7/31/79. Statutory Authority: RCW 49.17.040, 49.17.150, and 49.17.240.

296-24-66223 Storage of explosive-actuated tools, instruction books, cleaning kits, and tools. [Order 73-5, § 296-24-66223, filed 5/9/73 and Order 73-4, § 296-24-66223, filed 5/7/73.] Repealed by 79-08-115 (Order 79-9), filed 7/31/79. Statutory Authority: RCW 49.17.040, 49.17.-150, and 49.17.240.

296-24-66225 Use low velocity tools when possible. [Order 73-5, § 296-24-66225, filed 5/9/73 and Order 73-4, § 296-24-66225, filed 5/7/73.] Repealed by 79-08-115 (Order 79-9), filed 7/31/79. Statutory Authority: RCW 49.17.040, 49.17.150, and 49.17.240.

296-24-663 Safety requirements for powder actuated fastening systems. [Statutory Authority: RCW 49.17.040, 49.17.150, and 49.17.240. 79-08-115 (Order 79-9), § 296-24-663, filed 7/31/79.] Repealed by 03-09-009, filed 4/4/03, effective 8/1/03. Statutory Authority: RCW 49.17.010, [49.17].040, [49.17].050, and [49.17].060. Later promulgation, see chapter 296-807 WAC.

296-24-66301 Scope. [Statutory Authority: RCW 49.17.040, 49.17.-150, and 49.17.240. 79-08-115 (Order 79-9), § 296-24-66301, filed 7/31/79.] Repealed by 03-09-009, filed 4/4/03, effective 8/1/03. Statutory Authority: RCW 49.17.010, [49.17].040, [49.17].050, and [49.17].060. Later promulgation, see chapter 296-807 WAC.

296-24-66303 Purpose. [Statutory Authority: RCW 49.17.040, 49.17.150, and 49.17.240. 79-08-115 (Order 79-9), § 296-24-66303, filed 7/31/79.] Repealed by 03-09-009, filed 4/4/03, effective 8/1/03. Statutory Authority: RCW 49.17.010, [49.17].040, [49.17].050, and [49.17].-060. Later promulgation, see chapter 296-807 WAC.

296-24-66305 Definitions applicable to this section. [Statutory Authority: Chapter 49.17 RCW. 94-15-096 (Order 94-07), § 296-24-66305, filed 7/20/94, effective 9/20/94. Statutory Authority: RCW 49.17.040, 49.17.150, and 49.17.240. 79-08-115 (Order 79-9), § 296-24-66305, filed 7/31/79.] Repealed by 03-09-009, filed 4/4/03, effective 8/1/03. Statutory Authority: RCW 49.17.010, [49.17].040, [49.17].050, and [49.17].060. Later promulgation, see chapter 296-807 WAC.

296-24-66307 Requirements. [Statutory Authority: RCW 49.17.040, 49.17.150, and 49.17.240. 79-08-115 (Order 79-9), § 296-24-66307, filed 7/31/79.] Repealed by 03-09-009, filed 4/4/03, effective 8/1/03. Statutory Authority: RCW 49.17.010, [49.17].040, [49.17].050, and [49.17].-060. Later promulgation, see chapter 296-807 WAC.

296-24-66309 Power loads. [Statutory Authority: RCW 49.17.040, 49.17.150, and 49.17.240. 79-08-115 (Order 79-9), § 296-24-66309, filed 7/31/79.] Repealed by 03-09-009, filed 4/4/03, effective 8/1/03. Statutory Authority:

RCW 49.17.010, [49.17].040, [49.17].050, and [49.17].-060. Later promulgation, see chapter 296-807 WAC.

296-24-66311 Fasteners. [Statutory Authority: RCW 49.17.040, 49.17.150, and 49.17.240. 79-08-115 (Order 79-9), § 296-24-66311, filed 7/31/79.] Repealed by 03-09-009, filed 4/4/03, effective 8/1/03. Statutory Authority: RCW 49.17.010, [49.17].040, [49.17].050, and [49.17].-060. Later promulgation, see chapter 296-807 WAC.

296-24-66313 Operation. [Statutory Authority: Chapter 49.17 RCW. 89-11-035 (Order 89-03), § 296-24-66313, filed 5/15/89, effective 6/30/89. Statutory Authority: RCW 49.17.040, 49.17.150, and 49.17.240. 79-08-115 (Order 79-9), § 296-24-66313, filed 7/31/79.] Repealed by 03-09-009, filed 4/4/03, effective 8/1/03. Statutory Authority: RCW 49.17.010, [49.17].040, [49.17].050, and [49.17].060. Later promulgation, see chapter 296-807 WAC.

296-24-66315 Limitations of use. [Statutory Authority: RCW 49.17.-040, 49.17.150, and 49.17.240. 79-08-115 (Order 79-9), § 296-24-66315, filed 7/31/79.] Repealed by 03-09-009, filed 4/4/03, effective 8/1/03. Statutory Authority: RCW 49.17.010, [49.17].040, [49.17].050, and [49.17].-060. Later promulgation, see chapter 296-807 WAC.

296-24-66317 Maintenance and storage. [Statutory Authority: RCW 49.17.040, 49.17.150, and 49.17.240. 79-08-115 (Order 79-9), § 296-24-66317, filed 7/31/79.] Repealed by 03-09-009, filed 4/4/03, effective 8/1/03. Statutory Authority: RCW 49.17.010, [49.17].040, [49.17].050, and [49.17].060. Later promulgation, see chapter 296-807 WAC.

296-24-66319 Authorized instructor. [Statutory Authority: Chapter 49.17 RCW. 94-15-096 (Order 94-07), § 296-24-66319, filed 7/20/94, effective 9/20/94. Statutory Authority: RCW 49.17.040, 49.17.150, and 49.17.240. 79-08-115 (Order 79-9), § 296-24-66319, filed 7/31/79.] Repealed by 03-09-009, filed 4/4/03, effective 8/1/03. Statutory Authority: RCW 49.17.010, [49.17].040, [49.17].050, and [49.17].060. Later promulgation, see chapter 296-807 WAC.

296-24-66321 Qualified operator. [Statutory Authority: Chapter 49.17 RCW. 94-15-096 (Order 94-07), § 296-24-66321, filed 7/20/94, effective 9/20/94. Statutory Authority: RCW 49.17.040, 49.17.150, and 49.17.240. 79-08-115 (Order 79-9), § 296-24-66321, filed 7/31/79.] Repealed by 03-09-009, filed 4/4/03, effective 8/1/03. Statutory Authority: RCW 49.17.010, [49.17].040, [49.17].050, and [49.17].060. Later promulgation, see chapter 296-807 WAC.

296-24-665 Power lawnmowers. [Order 73-5, § 296-24-665, filed 5/9/73 and Order 73-4, § 296-24-665, filed 5/7/73.] Repealed by 03-09-009, filed 4/4/03, effective 8/1/03. Statutory Authority: RCW 49.17.010, [49.17].040, [49.17].050, and [49.17].060. Later promulgation, see chapter 296-807 WAC.

296-24-66501 Terms. [Order 73-5, § 296-24-66501, filed 5/9/73 and Order 73-4, § 296-24-66501, filed 5/7/73.] Repealed by 03-09-009, filed 4/4/03, effective 8/1/03. Statutory Authority: RCW 49.17.010, [49.17].040, [49.17].050, and [49.17].060. Later promulgation, see chapter 296-807 WAC.

296-24-66503 General requirements. [Order 76-6, § 296-24-66503, filed 3/1/76; Order 73-5, § 296-24-66503, filed 5/9/73 and Order 73-4, § 296-24-66503, filed 5/7/73.] Repealed by 03-09-009, filed 4/4/03, effective 8/1/03. Statutory Authority: RCW 49.17.010, [49.17].040, [49.17].050, and [49.17].060. Later promulgation, see chapter 296-807 WAC.

296-24-66505 Walk-behind and riding rotary mowers. [Order 74-27, § 296-24-66505, filed 5/7/74; Order 73-5, § 296-24-66505, filed 5/9/73 and Order 73-4, § 296-24-66505, filed 5/7/73.] Repealed by 03-09-009, filed 4/4/03, effective 8/1/03. Statutory Authority: RCW 49.17.010, [49.17].040, [49.17].050, and [49.17].060. Later promulgation, see chapter 296-807 WAC.

296-24-66507 Walk-behind rotary mowers. [Order 74-27, § 296-24-66507, filed 5/7/74; Order 73-5, § 296-24-66507, filed 5/9/73 and Order 73-4, § 296-24-66507, filed 5/7/73.] Repealed by 03-09-009, filed 4/4/03, effective 8/1/03. Statutory Authority: RCW 49.17.010, [49.17].040, [49.17].050, and [49.17].060. Later promulgation, see chapter 296-807 WAC.

296-24-66509 Riding rotary mowers. [Order 74-27, § 296-24-66509, filed 5/7/74; Order 73-5, § 296-24-66509, filed 5/9/73 and Order 73-4, § 296-24-66509, filed 5/7/73.] Repealed by 03-09-009, filed 4/4/03, effective 8/1/03. Statutory Authority: RCW 49.17.010, [49.17].040, [49.17].050, and [49.17].060. Later promulgation, see chapter 296-807 WAC.

296-24-670 Jacks. [Order 73-5, § 296-24-670, filed 5/9/73 and Order 73-4, § 296-24-670, filed 5/7/73.] Repealed by 03-09-009, filed 4/4/03, effective 8/1/03. Statutory Authority: RCW 49.17.010, [49.17].040, [49.17].050, and [49.17].060. Later promulgation, see chapter 296-807 WAC.

296-24-67001 Jack terms. [Order 73-5, § 296-24-67001, filed 5/9/73 and Order 73-4, § 296-24-67001, filed 5/7/73.] Repealed by 03-09-009, filed 4/4/03, effective 8/1/03. Statutory Authority: RCW 49.17.010, [49.17].040, [49.17].050, and [49.17].060. Later promulgation, see chapter 296-807 WAC.

296-24-67003 Loading and marking. [Order 73-5, § 296-24-67003, filed 5/9/73 and Order 73-4, § 296-24-67003, filed 5/7/73.] Repealed by 03-09-009, filed 4/4/03, effective 8/1/03. Statutory Authority: RCW 49.17.010, [49.17].-040, [49.17].050, and [49.17].060. Later promulgation, see chapter 296-807 WAC.

296-24-67005 Operation and maintenance. [Statutory Authority: Chapter 49.17 RCW. 94-15-096 (Order 94-07), § 296-24-67005, filed 7/20/94, effective 9/20/94; Order 73-5, § 296-24-67005, filed 5/9/73 and Order 73-4, § 296-24-67005, filed 5/7/73.] Repealed by 03-09-009, filed 4/4/03, effective 8/1/03. Statutory Authority: RCW 49.17.010, [49.17].040, [49.17].050, and [49.17].060. Later promulgation, see chapter 296-807 WAC.

296-24-675 Safe practices of abrasive blasting operations. [Order 73-5, § 296-24-675, filed 5/9/73 and Order 73-4, § 296-24-675, filed 5/7/73.] Repealed by 06-12-074, filed 6/6/06, effective 9/1/06. Statutory Authority: RCW 49.17.010, 49.17.040, 49.17.050, 49.17.060.

296-24-67501 Purpose. [Statutory Authority: RCW 49.17.040, [49.17].050 and [49.17].060. 98-02-006, § 296-24-67501, filed 12/26/97, effective 3/1/98; Order 73-5, § 296-24-67501, filed 5/9/73 and Order 73-4, § 296-24-67501, filed 5/7/73.] Repealed by 06-12-074, filed 6/6/06, effective 9/1/06. Statutory Authority: RCW 49.17.010, 49.17.040, 49.17.050, 49.17.060.

296-24-67503 Application. [Order 73-5, § 296-24-67503, filed 5/9/73 and Order 73-4, § 296-24-67503, filed 5/7/73.] Repealed by 06-12-074, filed 6/6/06, effective 9/1/06. Statutory Authority: RCW 49.17.010, 49.17.040, 49.17.050, 49.17.060.

296-24-67505 Selection of abrasives and equipment. [Statutory Authority: RCW 49.17.040, [49.17].050 and [49.17].-060. 98-02-006, § 296-24-67505, filed 12/26/97, effective 3/1/98; Order 73-5, § 296-24-67505, filed 5/9/73 and Order 73-4, filed 5/7/73.] Repealed by 06-12-074, filed 6/6/06, effective 9/1/06. Statutory Authority: RCW 49.17.010, 49.17.040, 49.17.050, 49.17.060.

296-24-67507 Definitions. [Statutory Authority: RCW 49.17.010, [49.17].040 and [49.17].050. 99-10-071, § 296-24-67507, filed 5/4/99, effective 9/1/99. Statutory Authority: RCW 49.17.040, [49.17].050 and [49.17].060. 98-02-006, § 296-24-67507, filed 12/26/97, effective 3/1/98. Statutory Authority: Chapter 49.17 RCW. 94-15-096 (Order 94-07), § 296-24-67507, filed 7/20/94, effective 9/20/94; Order 73-5, § 296-24-67507, filed 5/9/73 and Order 73-4, § 296-24-67507, filed 5/7/73.] Repealed by 06-12-074, filed 6/6/06, effective 9/1/06. Statutory Authority: RCW 49.17.010, 49.17.040, 49.17.050, 49.17.060.

296-24-67509 Dust hazards from abrasive blasting. [Statutory Authority: RCW 49.17.040, [49.17].050 and [49.17].060. 98-02-006, § 296-24-67509, filed 12/26/97, effective 3/1/98. Statutory Authority: Chapter 49.17 RCW. 91-24-017 (Order 91-07), § 296-24-67509, filed 11/22/91, effective 12/24/91; Order 73-5, § 296-24-67509, filed 5/9/73 and Order 73-4, § 296-24-67509, filed 5/7/73.] Repealed by 06-12-074, filed 6/6/06, effective 9/1/06. Statutory Authority: RCW 49.17.010, 49.17.040, 49.17.050, 49.17.060.

296-24-67511 Blast cleaning enclosures. [Statutory Authority: RCW 49.17.040, [49.17].050 and [49.17].060. 98-02-006, § 296-24-67511, filed 12/26/97, effective 3/1/98; Order 73-5, § 296-24-67511, filed 5/9/73 and Order 73-4, § 296-24-67511, filed 5/7/73.] Repealed by 06-12-074, filed 6/6/06, effective 9/1/06. Statutory Authority: RCW 49.17.010, 49.17.040, 49.17.050, 49.17.060.

296-24-67513 Construction and maintenance of the exhaust ventilation systems. [Statutory Authority: RCW 49.17.010, [49.17].040, [49.17].050. 02-12-098, § 296-24-67513, filed 6/5/02, effective 8/1/02. Statutory Authority: RCW 49.17.040, [49.17].050 and [49.17].060. 98-02-006, § 296-24-67513, filed 12/26/97, effective 3/1/98; Order 73-5, § 296-24-67513, filed 5/9/73 and Order 73-4, § 296-24-67513, filed 5/7/73.] Repealed by 06-12-074, filed 6/6/06, effective 9/1/06. Statutory Authority: RCW 49.17.010, 49.17.040, 49.17.050, 49.17.060.

296-24-67515 Personal protective equipment. [Statutory Authority: RCW 49.17.010, 49.17.040, 49.17.050, 49.17.060. 05-03-093, § 296-24-67515, filed 1/18/05, effective 3/1/05. Statutory Authority: RCW 49.17.010, [49.17].040, [49.17].050. 02-12-098, § 296-24-67515, filed 6/5/02, effective 8/1/02; 01-11-038, § 296-24-67515, filed 5/9/01, effective 9/1/01; 99-10-071, § 296-24-67515, filed 5/4/99, effective 9/1/99. Statutory Authority: RCW 49.17.040, [49.17].050 and [49.17].060. 98-02-006, § 296-24-67515, filed 12/26/97, effective 3/1/98. Statutory Authority: Chapter 49.17 RCW. 94-15-096 (Order 94-07), § 296-24-67515, filed 7/20/94, effective 9/20/94; Order 73-5, § 296-24-67515, filed 5/9/73 and Order 73-4, § 296-24-67515, filed 5/7/73.] Repealed by 06-12-074, filed 6/6/06, effective 9/1/06. Statutory Authority: RCW 49.17.010, 49.17.040, 49.17.050, 49.17.060.

296-24-67517 Air supply and air compressors. [Statutory Authority: RCW 49.17.010, 49.17.040, 49.17.050, 49.17.060. 05-03-093, § 296-24-67517, filed 1/18/05, effective 3/1/05. Statutory Authority: RCW 49.17.010, [49.17].040 and [49.17].050. 99-10-071, § 296-24-67517, filed 5/4/99, effective 9/1/99. Statutory Authority: RCW 49.17.040, [49.17].050 and [49.17].060. 98-02-006, § 296-24-67517, filed 12/26/97, effective 3/1/98; Order 73-5, § 296-24-67517, filed 5/9/73 and Order 73-4, § 296-24-67517, filed 5/7/73.] Repealed by 06-12-074, filed 6/6/06, effective 9/1/06. Statutory Authority: RCW 49.17.010, 49.17.040, 49.17.050, 49.17.060.

296-24-67519 Operational procedures and general safety. [Statutory Authority: RCW 49.17.040, [49.17].050 and [49.17].-060. 98-02-006, § 296-24-67519, filed 12/26/97, effective 3/1/98; Order 73-5, § 296-24-67519, filed 5/9/73 and Order 73-4, § 296-24-67519, filed 5/7/73.] Repealed by 06-12-074, filed 6/6/06, effective 9/1/06. Statutory Authority: RCW 49.17.010, 49.17.040, 49.17.050, 49.17.060.

296-24-67520 Ventilation. [Statutory Authority: RCW 49.17.040, [49.17].050 and [49.17].060. 98-02-006, § 296-24-67520, filed 12/26/97, effective 3/1/98.] Repealed by 06-12-074, filed 6/6/06, effective 9/1/06. Statutory Authority: RCW 49.17.010, 49.17.040, 49.17.050, 49.17.060.

296-24-67521 Appendix 1. [Statutory Authority: RCW 49.17.040, [49.17].050 and [49.17].060. 98-02-006, § 296-24-67521, filed 12/26/97, effective 3/1/98.] Repealed by 06-12-074, filed 6/6/06, effective 9/1/06. Statutory Authority: RCW 49.17.010, 49.17.040, 49.17.050, 49.17.060.

296-24-677 Ventilation. [Order 73-5, § 296-24-677, filed 5/9/73 and Order 73-4, § 296-24-677, filed 5/7/73.] Repealed by 98-02-006, filed 12/26/97, effective 3/1/98. Statutory Authority: RCW 49.17.040, [49.17].050 and [49.17].-060.

296-24-67701 Scope. [Order 73-5, § 296-24-67701, filed 5/9/73 and Order 73-4, § 296-24-67701, filed 5/7/73.] Repealed by 98-02-006, filed 12/26/97, effective 3/1/98. Statutory Authority: RCW 49.17.040, [49.17].050 and [49.17].-060.

296-24-73503 Housekeeping. [Order 74-27, § 296-24-73503, filed 5/7/74; Order 73-5, § 296-24-73503, filed 5/9/73 and Order 73-4, § 296-24-73503, filed 5/7/73.] Repealed by 01-11-038, filed 5/9/01, effective 9/1/01. Statutory Authority: RCW 49.17.010, [49.17].040, and [49.17].-050.

296-24-73509 Floor loading protection. [Statutory Authority: Chapter 49.17 RCW. 94-15-096 (Order 94-07), § 296-24-73509, filed 7/20/94, effective 9/20/94; Order 73-5, § 296-24-73509, filed 5/9/73 and Order 73-4, § 296-24-73509, filed 5/7/73.] Repealed by 01-11-038, filed 5/9/01, effective 9/1/01. Statutory Authority: RCW 49.17.010, [49.17].040, and [49.17].050.

296-24-73513 Buildings—Floors. [Order 74-27, § 296-24-73513, filed 5/7/74.] Repealed by 01-11-038, filed 5/9/01, effective 9/1/01. Statutory Authority: RCW 49.17.010, [49.17].040, and [49.17].050.

296-24-75009 Stairway railings and guards. [Statutory Authority: Chapter 49.17 RCW. 91-03-044 (Order 90-18), § 296-24-75009, filed 1/10/91, effective 2/12/91; 90-03-029 (Order 89-20), § 296-24-75009, filed 1/11/90, effective 2/26/90; Order 73-5, § 296-24-75009, filed 5/9/73 and Order 73-4, § 296-24-75009, filed 5/7/73.] Repealed by 01-17-033, filed 8/8/01, effective 9/1/01. Statutory Authority: RCW 49.17.010, [49.17].040, and [49.17].-050.

296-24-76505 Where fixed stairs are required. [Order 73-5, § 296-24-76505, filed 5/9/73 and Order 73-4, § 296-24-76505, filed 5/7/73.] Repealed by 01-11-038, filed 5/9/01, effective 9/1/01. Statutory Authority: RCW 49.17.010, [49.17].040, and [49.17].050.

296-24-76517 Railings and handrails. [Order 73-5, § 296-24-76517, filed 5/9/73 and Order 73-4, § 296-24-76517, filed 5/7/73.] Repealed by 01-11-038, filed 5/9/01, effective 9/1/01. Statutory Authority: RCW 49.17.010, [49.17].-040, and [49.17].050.

296-24-780 Portable wood ladders. [Order 73-5, § 296-24-780, filed 5/9/73 and Order 73-4, § 296-24-780, filed 5/7/73.] Repealed by 05-20-068, filed 10/4/05, effective 1/1/06. Statutory Authority: RCW 49.17.010, 49.17.040, 49.17.050, 49.17.060.

296-24-78003 Application of requirements. [Statutory Authority: RCW 49.17.010, [49.17].040, and [49.17].050. 01-17-033, § 296-24-78003, filed 8/8/01, effective 9/1/01; Order 73-5, § 296-24-78003, filed 5/9/73 and Order 73-4, § 296-24-78003, filed 5/7/73.] Repealed by 05-20-068, filed 10/4/05, effective 1/1/06. Statutory Authority: RCW 49.17.010, 49.17.040, 49.17.050, 49.17.060.

296-24-78005 Materials. [Statutory Authority: RCW 49.17.010, [49.17].040, and [49.17].050. 01-17-033, § 296-24-78005, filed 8/8/01, effective 9/1/01; Order 73-5, § 296-24-78005, filed 5/9/73 and Order 73-4, § 296-24-78005, filed 5/7/73.] Repealed by 05-20-068, filed 10/4/05, effective 1/1/06. Statutory Authority: RCW 49.17.010, 49.17.040, 49.17.050, 49.17.060.

296-24-78007 Construction requirements. [Statutory Authority: Chapter 49.17 RCW. 90-03-029 (Order 89-20), § 296-24-78007, filed 1/11/90, effective 2/26/90; Order 73-5, § 296-24-78007, filed 5/9/73 and Order 73-4, § 296-24-78007, filed 5/7/73.] Repealed by 05-20-068, filed 10/4/05, effective 1/1/06. Statutory Authority: RCW 49.17.010, 49.17.040, 49.17.050, 49.17.060.

296-24-78009 Ladder tests. [Statutory Authority: RCW 49.17.010, [49.17].040, and [49.17].050. 01-17-033, § 296-24-78009, filed 8/8/01, effective 9/1/01. Statutory Authority: Chapter 49.17 RCW. 94-15-096 (Order 94-07), § 296-24-78009, filed 7/20/94, effective 9/20/94; 88-11-021 (Order 88-04), § 296-24-78009, filed 5/11/88. Statutory Authority: RCW 49.17.040, 49.17.150 and 49.17.240. 79-08-115 (Order 79-9), § 296-24-78009, filed 7/31/79; Order 76-6, § 296-24-78009, filed 3/1/76; Order 73-5, § 296-24-78009, filed 5/9/73 and Order 73-4, § 296-24-78009, filed 5/7/73.] Repealed by 05-20-068, filed 10/4/05, effective 1/1/06. Statutory Authority: RCW 49.17.010, 49.17.040, 49.17.050, 49.17.060.

296-24-795 Portable metal ladders. [Order 73-5, § 296-24-795, filed 5/9/73 and Order 73-4, § 296-24-795, filed 5/7/73.] Repealed by 05-20-068, filed 10/4/05, effective 1/1/06. Statutory Authority: RCW 49.17.010, 49.17.040, 49.17.050, 49.17.060.

296-24-79501 Terms. [Order 73-5, § 296-24-79501, filed 5/9/73 and Order 73-4, § 296-24-79501, filed 5/7/73.] Repealed by 05-20-068, filed 10/4/05, effective 1/1/06. Statutory Authority: RCW 49.17.010, 49.17.040, 49.17.050, 49.17.060.

296-24-79503 Requirements. [Order 73-5, § 296-24-79503, filed 5/9/73 and Order 73-4, § 296-24-79503, filed 5/7/73.] Repealed by 05-20-068, filed 10/4/05, effective 1/1/06. Statutory Authority: RCW 49.17.010, 49.17.040, 49.17.050, 49.17.060.

296-24-79505 Testing. [Statutory Authority: Chapter 49.17 RCW. 94-15-096 (Order 94-07), § 296-24-79505, filed 7/20/94, effective 9/20/94; Order 73-5, § 296-24-79505, filed 5/9/73 and Order 73-4, § 296-24-79505, filed 5/7/73.] Repealed by 05-20-068, filed 10/4/05, effective 1/1/06. Statutory Authority: RCW 49.17.010, 49.17.040, 49.17.050, 49.17.060.

296-24-79507 Care and maintenance and use of ladders. [Statutory Authority: Chapter 49.17 RCW. 94-15-096 (Order 94-

07), § 296-24-79507, filed 7/20/94, effective 9/20/94; 91-24-017 (Order 91-07), § 296-24-79507, filed 11/22/91, effective 12/24/91; Order 76-6, § 296-24-79507, filed 3/1/76; Order 73-5, § 296-24-79507, filed 5/9/73 and Order 73-4, § 296-24-79507, filed 5/7/73.] Repealed by 01-11-038, filed 5/9/01, effective 9/1/01. Statutory Authority: RCW 49.17.010, [49.17].040, and [49.17].050.

296-24-810 Fixed ladders. [Order 73-5, § 296-24-810, filed 5/9/73 and Order 73-4, § 296-24-810, filed 5/7/73.] Repealed by 06-16-020, filed 7/24/06, effective 12/1/06. Statutory Authority: RCW 49.17.010, 49.17.040, 49.17.050, 49.17.060.

296-24-81001 Definitions. [Statutory Authority: Chapter 49.17 RCW. 94-15-096 (Order 94-07), § 296-24-81001, filed 7/20/94, effective 9/20/94; Order 73-5, § 296-24-81001, filed 5/9/73 and Order 73-4, § 296-24-81001, filed 5/7/73.] Repealed by 06-16-020, filed 7/24/06, effective 12/1/06. Statutory Authority: RCW 49.17.010, 49.17.-040, 49.17.050, 49.17.060.

296-24-81003 Design requirements. [Statutory Authority: Chapter 49.17 RCW. 90-03-029 (Order 89-20), § 296-24-81003, filed 1/11/90, effective 2/26/90; Order 73-5, § 296-24-81003, filed 5/9/73 and Order 73-4, § 296-24-81003, filed 5/7/73.] Repealed by 06-16-020, filed 7/24/06, effective 12/1/06. Statutory Authority: RCW 49.17.-010, 49.17.040, 49.17.050, 49.17.060.

296-24-81005 Specific features. [Statutory Authority: Chapter 49.17 RCW. 90-03-029 (Order 89-20), § 296-24-81005, filed 1/11/90, effective 2/26/90; Order 73-5, § 296-24-81005, filed 5/9/73 and Order 73-4, § 296-24-81005, filed 5/7/73.] Repealed by 06-16-020, filed 7/24/06, effective 12/1/06. Statutory Authority: RCW 49.17.010, 49.17.040, 49.17.050, 49.17.060.

296-24-81007 Clearance. [Order 73-5, § 296-24-81007, filed 5/9/73 and Order 73-4, § 296-24-81007, filed 5/7/73.] Repealed by 06-16-020, filed 7/24/06, effective 12/1/06. Statutory Authority: RCW 49.17.010, 49.17.040, 49.17.050, 49.17.060.

296-24-81009 Special requirements. [Statutory Authority: Chapter 49.17 RCW. 94-15-096 (Order 94-07), § 296-24-81009, filed 7/20/94, effective 9/20/94; Order 73-5, § 296-24-81009, filed 5/9/73 and Order 73-4, § 296-24-81009, filed 5/7/73.] Repealed by 06-16-020, filed 7/24/06, effective 12/1/06. Statutory Authority: RCW 49.17.-010, 49.17.040, 49.17.050, 49.17.060.

296-24-81011 Pitch. [Statutory Authority: RCW 49.17.040, 49.17.-050, 49.17.240, chapters 43.22 and 42.30 RCW. 80-17-015 (Order 80-21), § 296-24-81011, filed 11/13/80; Order 73-5, § 296-24-81011, filed 5/9/73 and Order 73-4, § 296-24-81011, filed 5/7/73.] Repealed by 06-16-020, filed 7/24/06, effective 12/1/06. Statutory Authority: RCW 49.17.010, 49.17.040, 49.17.050, 49.17.060.

296-24-81013 Maintenance and use. [Statutory Authority: Chapter 49.17 RCW. 94-15-096 (Order 94-07), § 296-24-81013, filed 7/20/94, effective 9/20/94; Order 76-6, § 296-24-81013, filed 3/1/76; Order 73-5, § 296-24-81013, filed 5/9/73 and Order 73-4, § 296-24-81013, filed 5/7/73.] Repealed by 06-16-020, filed 7/24/06, effective 12/1/06. Statutory Authority: RCW 49.17.010, 49.17.040, 49.17.050, 49.17.060.

296-24-825 Safety requirements for scaffolding. [Order 73-5, § 296-24-825, filed 5/9/73 and Order 73-4, § 296-24-825, filed 5/7/73.] Repealed by 00-08-078, filed 4/4/00, effective 7/1/00. Statutory Authority: RCW 49.17.010, [49.17].040, and [49.17].050.

296-24-82501 Definitions. [Statutory Authority: Chapter 49.17 RCW. 94-15-096 (Order 94-07), § 296-24-82501, filed 7/20/94, effective 9/20/94; Order 73-5, § 296-24-82501, filed 5/9/73 and Order 73-4, § 296-24-82501, filed 5/7/73.] Repealed by 00-08-078, filed 4/4/00, effective 7/1/00. Statutory Authority: RCW 49.17.010, [49.17].-040, and [49.17].050.

296-24-82503 General requirements for all scaffolds. [Statutory Authority: Chapter 49.17 RCW. 94-15-096 (Order 94-07), § 296-24-82503, filed 7/20/94, effective 9/20/94; 90-03-029 (Order 89-20), § 296-24-82503, filed 1/11/90, effective 2/26/90; Order 74-27, § 296-24-82503, filed 5/7/74; Order 73-5, § 296-24-82503, filed 5/9/73 and Order 73-4, § 296-24-82503, filed 5/7/73.] Repealed by 00-08-078, filed 4/4/00, effective 7/1/00. Statutory Authority: RCW 49.17.010, [49.17].040, and [49.17].050.

296-24-82505 General requirements for wood pole scaffolds. [Order 73-5, § 296-24-82505, filed 5/9/73 and Order 73-4, § 296-24-82505, filed 5/7/73.] Repealed by 00-08-078, filed 4/4/00, effective 7/1/00. Statutory Authority: RCW 49.17.010, [49.17].040, and [49.17].050.

296-24-82507 Tube and coupler scaffolds. [Statutory Authority: RCW 49.17.040, 49.17.150, and 49.17.240. 79-08-115 (Order 79-9), § 296-24-82507, filed 7/31/79; Order 73-5, § 296-24-82507, filed 5/9/73 and Order 73-4, § 296-24-82507, filed 5/7/73.] Repealed by 00-08-078, filed 4/4/00, effective 7/1/00. Statutory Authority: RCW 49.17.010, [49.17].040, and [49.17].050.

296-24-82509 Tubular welded frame scaffolds. [Statutory Authority: RCW 49.17.040, 49.17.150, and 49.17.240. 79-08-115 (Order 79-9), § 296-24-82509, filed 7/31/79; Order 73-5, § 296-24-82509, filed 5/9/73 and Order 73-4, § 296-24-82509, filed 5/7/73.] Repealed by 00-08-078, filed 4/4/00, effective 7/1/00. Statutory Authority: RCW 49.17.010, [49.17].040, and [49.17].050.

296-24-82511 Outrigger scaffolds. [Order 73-5, § 296-24-82511, filed 5/9/73 and Order 73-4, § 296-24-82511, filed 5/7/73.] Repealed by 00-08-078, filed 4/4/00, effective 7/1/00. Statutory Authority: RCW 49.17.010, [49.17].040, and [49.17].050.

296-24-82513 Masons' adjustable multiple-point suspension scaffolds. [Statutory Authority: Chapter 49.17 RCW. 94-15-096 (Order 94-07), § 296-24-82513, filed 7/20/94, effective 9/20/94; 88-23-054 (Order 88-25), § 296-24-82513, filed 11/14/88; Order 73-5, § 296-24-82513, filed 5/9/73 and Order 73-4, § 296-24-82513, filed 5/7/73.] Repealed by 00-08-078, filed 4/4/00, effective 7/1/00. Statutory Authority: RCW 49.17.010, [49.17].040, and [49.17].050.

296-24-82515 Two-point suspension scaffolds (swinging scaffolds). [Statutory Authority: Chapter 49.17 RCW. 94-15-096 (Order 94-07), § 296-24-82515, filed 7/20/94, effective 9/20/94; 88-23-054 (Order 88-25), § 296-24-82515, filed 11/14/88. Statutory Authority: RCW 49.17.040, 49.17.050, and 49.17.240. 80-11-010 (Order 80-14), § 296-24-82515, filed 8/8/80. Statutory Authority: RCW 49.17.040, 49.17.150, and 49.17.240. 79-08-115 (Order 79-9), § 296-24-82515, filed 7/31/79; Order 73-5, § 296-24-82515, filed 5/9/73 and Order 73-4, § 296-24-82515, filed 5/7/73.] Repealed by 00-08-078, filed 4/4/00, effective 7/1/00. Statutory Authority: RCW 49.17.010, [49.17].040, and [49.17].050.

296-24-82517 Stone setters' adjustable multiple-point suspension scaffolds. [Statutory Authority: Chapter 49.17 RCW. 88-23-054 (Order 88-25), § 296-24-82517, filed 11/14/88. Statutory Authority: RCW 49.17.040, 49.17.150, and 49.17.240. 79-08-115 (Order 79-9), § 296-24-82517, filed 7/31/79; Order 73-5, § 296-24-82517, filed 5/9/73 and Order 73-4, § 296-24-82517, filed 5/7/73.] Repealed by 00-08-078, filed 4/4/00, effective 7/1/00. Statutory Authority: RCW 49.17.010, [49.17].040, and [49.17].050.

296-24-82519 Single-point adjustable suspension scaffolds. [Statutory Authority: Chapter 49.17 RCW. 94-15-096 (Order 94-07), § 296-24-82519, filed 7/20/94, effective 9/20/94; 88-23-054 (Order 88-25), § 296-24-82519, filed 11/14/88; Order 73-5, § 296-24-82519, filed 5/9/73 and Order 73-4, § 296-24-82519, filed 5/7/73.] Repealed by 00-08-078, filed 4/4/00, effective 7/1/00. Statutory Authority: RCW 49.17.010, [49.17].040, and [49.17].-050.

296-24-82521 Boatswain's chairs. [Statutory Authority: Chapter 49.17 RCW. 94-15-096 (Order 94-07), § 296-24-82521, filed 7/20/94, effective 9/20/94. Statutory Authority: RCW 49.17.040, 49.17.050, and 49.17.240. 80-11-010 (Order 80-14), § 296-24-82521, filed 8/8/80. Statutory Authority: RCW 49.17.040, 49.17.150, and 49.17.240. 79-08-115 (Order 79-9), § 296-24-82521, filed 7/31/79; Order 73-5, § 296-24-82521, filed 5/9/73 and Order 73-4, § 296-24-82521, filed 5/7/73.] Repealed by 00-08-078, filed 4/4/00, effective 7/1/00. Statutory Authority: RCW 49.17.010, [49.17].040, and [49.17].050.

296-24-82523 Carpenters' bracket scaffolds. [Statutory Authority: RCW 49.17.040, 49.17.150, and 49.17.240. 79-08-115 (Order 79-9), § 296-24-82523, filed 7/31/79; Order 76-6, § 296-24-82523, filed 3/1/76; Order 73-5, § 296-24-82523, filed 5/9/73 and Order 73-4, § 296-24-82523, filed 5/7/73.] Repealed by 00-08-078, filed 4/4/00, effective 7/1/00. Statutory Authority: RCW 49.17.010, [49.17].040, and [49.17].050.

296-24-82525 Bricklayers' square scaffolds. [Order 73-5, § 296-24-82525, filed 5/9/73 and Order 73-4, § 296-24-82525, filed 5/7/73.] Repealed by 00-08-078, filed 4/4/00, effective 7/1/00. Statutory Authority: RCW 49.17.010, [49.17].040, and [49.17].050.

296-24-82527 Horse scaffolds. [Statutory Authority: RCW 49.17.040, 49.17.150, and 49.17.240. 79-08-115 (Order 79-9), § 296-24-82527, filed 7/31/79; Order 73-5, § 296-24-82527, filed 5/9/73 and Order 73-4, § 296-24-82527, filed 5/7/73.] Repealed by 00-08-078, filed 4/4/00, effective 7/1/00. Statutory Authority: RCW 49.17.010, [49.17].040, and [49.17].050.

296-24-82529 Needle beam scaffold. [Statutory Authority: Chapter 49.17 RCW. 94-15-096 (Order 94-07), § 296-24-82529, filed 7/20/94, effective 9/20/94. Statutory Authority: RCW 49.17.040, 49.17.150, and 49.17.240. 79-08-115 (Order 79-9), § 296-24-82529, filed 7/31/79; Order 73-5, § 296-24-82529, filed 5/9/73 and Order 73-4, § 296-24-82529, filed 5/7/73.] Repealed by 00-08-078, filed 4/4/00, effective 7/1/00. Statutory Authority: RCW 49.17.010, [49.17].040, and [49.17].050.

296-24-82531 Plasterers', decorators', and large area scaffolds. [Statutory Authority: RCW 49.17.040, 49.17.150, and 49.17.240. 79-08-115 (Order 79-9), § 296-24-82531, filed 7/31/79; Order 73-5, § 296-24-82531, filed 5/9/73 and Order 73-4, § 296-24-82531, filed 5/7/73.] Repealed by 00-08-078, filed 4/4/00, effective 7/1/00. Statutory Authority: RCW 49.17.010, [49.17].040, and [49.17].050.

296-24-82533 Interior hung scaffolds. [Statutory Authority: RCW 49.17.040, 49.17.150, and 49.17.240. 79-08-115 (Order 79-9), § 296-24-82533, filed 7/31/79; Order 73-5, § 296-24-82533, filed 5/9/73 and Order 73-4, § 296-24-82533, filed 5/7/73.] Repealed by 00-08-078, filed 4/4/00, effective 7/1/00. Statutory Authority: RCW 49.17.010, [49.17].040, and [49.17].050.

296-24-82535 Ladder-jack scaffolds. [Order 73-5, § 296-24-82535, filed 5/9/73 and Order 73-4, § 296-24-82535, filed 5/7/73.] Repealed by 00-08-078, filed 4/4/00, effective 7/1/00. Statutory Authority: RCW 49.17.010, [49.17].-040, and [49.17].050.

296-24-82537 Window-jack scaffolds. [Statutory Authority: Chapter 49.17 RCW. 94-15-096 (Order 94-07), § 296-24-82537, filed 7/20/94, effective 9/20/94; Order 73-5, § 296-24-82537, filed 5/9/73 and Order 73-4, § 296-24-82537, filed 5/7/73.] Repealed by 00-08-078, filed 4/4/00, effective 7/1/00. Statutory Authority: RCW 49.17.010, [49.17].040, and [49.17].050.

296-24-82539 Roofing brackets. [Order 73-5, § 296-24-82539, filed 5/9/73 and Order 73-4, § 296-24-82539, filed 5/7/73.] Repealed by 00-08-078, filed 4/4/00, effective 7/1/00. Statutory Authority: RCW 49.17.010, [49.17].040, and [49.17].050.

296-24-82541 Crawling boards or chicken ladders. [Order 73-5, § 296-24-82541, filed 5/9/73 and Order 73-4, § 296-24-82541, filed 5/7/73.] Repealed by 00-08-078, filed 4/4/00, effective 7/1/00. Statutory Authority: RCW 49.17.010, [49.17].040, and [49.17].050.

296-24-82543 Float or ship scaffolds. [Statutory Authority: Chapter 49.17 RCW. 94-15-096 (Order 94-07), § 296-24-82543, filed 7/20/94, effective 9/20/94; Order 73-5, § 296-24-82543, filed 5/9/73 and Order 73-4, § 296-24-82543, filed 5/7/73.] Repealed by 00-08-078, filed 4/4/00, effective 7/1/00. Statutory Authority: RCW 49.17.010, [49.17].040, and [49.17].050.

296-24-82545 Scope. [Order 73-5, § 296-24-82545, filed 5/9/73 and Order 73-4, § 296-24-82545, filed 5/7/73.] Repealed by 00-08-078, filed 4/4/00, effective 7/1/00. Statutory Authority: RCW 49.17.010, [49.17].040, and [49.17].-050.

296-24-840 Manually propelled mobile ladder stands and scaffolds (towers). [Order 73-5, § 296-24-840, filed 5/9/73 and Order 73-4, § 296-24-840, filed 5/7/73.] Repealed by 00-08-078, filed 4/4/00, effective 7/1/00. Statutory Authority: RCW 49.17.010, [49.17].040, and [49.17].050.

296-24-84001 Definitions. [Statutory Authority: Chapter 49.17 RCW. 94-15-096 (Order 94-07), § 296-24-84001, filed 7/20/94, effective 9/20/94; Order 73-5, § 296-24-84001, filed 5/9/73 and Order 73-4, § 296-24-84001, filed 5/7/73.] Repealed by 00-08-078, filed 4/4/00, effective 7/1/00. Statutory Authority: RCW 49.17.010, [49.17].040, and [49.17].050.

296-24-84003 General requirements. [Statutory Authority: RCW 49.17.040, 49.17.150, and 49.17.240. 79-08-115 (Order 79-9), § 296-24-84003, filed 7/31/79; Order 73-5, § 296-24-84003, filed 5/9/73 and Order 73-4, § 296-24-84003, filed 5/7/73.] Repealed by 00-08-078, filed 4/4/00, effective 7/1/00. Statutory Authority: RCW 49.17.010, [49.17].040, and [49.17].050.

296-24-84005 Mobile tubular welded frame scaffolds. [Statutory Authority: Chapter 49.17 RCW. 94-15-096 (Order 94-07), § 296-24-84005, filed 7/20/94, effective 9/20/94; Order 73-5, § 296-24-84005, filed 5/9/73 and Order 73-4, § 296-24-84005, filed 5/7/73.] Repealed by 00-08-078, filed 4/4/00, effective 7/1/00. Statutory Authority: RCW 49.17.010, [49.17].040, and [49.17].050.

296-24-84007 Mobile tubular welded sectional folding scaffolds. [Statutory Authority: Chapter 49.17 RCW. 94-15-096 (Order 94-07), § 296-24-84007, filed 7/20/94, effective 9/20/94; Order 73-5, § 296-24-84007, filed 5/9/73 and Order 73-4, § 296-24-84007, filed 5/7/73.] Repealed by 00-08-078, filed 4/4/00, effective 7/1/00. Statutory Authority: RCW 49.17.010, [49.17].040, and [49.17].-050.

296-24-84009 Mobile tube and coupler scaffolds. [Statutory Authority: Chapter 49.17 RCW. 94-15-096 (Order 94-07), § 296-24-84009, filed 7/20/94, effective 9/20/94; Order 73-5, § 296-24-84009, filed 5/9/73 and Order 73-4, § 296-24-84009, filed 5/7/73.] Repealed by 00-08-078, filed 4/4/00, effective 7/1/00. Statutory Authority: RCW 49.17.010, [49.17].040, and [49.17].050.

296-24-84011 Mobile work platforms. [Order 73-5, § 296-24-84011, filed 5/9/73 and Order 73-4, § 296-24-84011, filed 5/7/73.] Repealed by 00-08-078, filed 4/4/00, effective 7/1/00. Statutory Authority: RCW 49.17.010, [49.17].-040, and [49.17].050.

296-24-84013 Mobile ladder stands. [Order 73-5, § 296-24-84013, filed 5/9/73 and Order 73-4, § 296-24-84013, filed 5/7/73.] Repealed by 00-08-078, filed 4/4/00, effective 7/1/00. Statutory Authority: RCW 49.17.010, [49.17].-040, and [49.17].050.

296-24-860 Scaffolds. [Statutory Authority: RCW 49.17.010, [49.17].040, and [49.17].050. 00-08-078, § 296-24-860, filed 4/4/00, effective 7/1/00.] Repealed by 05-01-054, filed 12/7/04, effective 3/1/05. Statutory Authority: RCW 49.17.010, 49.17.040, 49.17.050, 49.17.060.

296-24-86005 Definitions applicable to this part. [Statutory Authority: RCW 49.17.010, [49.17].040, and [49.17].050. 00-08-078, § 296-24-86005, filed 4/4/00, effective 7/1/00.] Repealed by 05-01-054, filed 12/7/04, effective 3/1/05. Statutory Authority: RCW 49.17.010, 49.17.040, 49.17.050, 49.17.060.

296-24-86010 General requirements. [Statutory Authority: RCW 49.17.010, [49.17].040, and [49.17].050. 00-08-078, § 296-24-86010, filed 4/4/00, effective 7/1/00.] Repealed by 05-01-054, filed 12/7/04, effective 3/1/05. Statutory Authority: RCW 49.17.010, 49.17.040, 49.17.050, 49.17.060.

296-24-86015 Additional requirements applicable to specific types of scaffolds. [Statutory Authority: RCW 49.17.010, [49.17].040, and [49.17].050. 00-08-078, § 296-24-86015, filed 4/4/00, effective 7/1/00.] Repealed by 05-01-054, filed 12/7/04, effective 3/1/05. Statutory Authority: RCW 49.17.010, 49.17.040, 49.17.050, 49.17.060.

296-24-86020 Training. [Statutory Authority: RCW 49.17.010, [49.17].040, and [49.17].050. 00-08-078, § 296-24-86020, filed 4/4/00, effective 7/1/00.] Repealed by 05-01-054, filed 12/7/04, effective 3/1/05. Statutory Authority: RCW 49.17.010, 49.17.040, 49.17.050, 49.17.060.

296-24-861 Manually propelled mobile ladder stands and scaffolds (towers). [Statutory Authority: RCW 49.17.010, [49.17].040, and [49.17].050. 00-08-078, § 296-24-861, filed 4/4/00, effective 7/1/00.] Repealed by 05-01-054, filed 12/7/04, effective 3/1/05. Statutory Authority: RCW 49.17.010, 49.17.040, 49.17.050, 49.17.060.

296-24-86105 General requirements. [Statutory Authority: RCW 49.17.010, [49.17].040, and [49.17].050. 00-08-078, § 296-24-86105, filed 4/4/00, effective 7/1/00.] Repealed by 05-01-054, filed 12/7/04, effective 3/1/05. Statutory Authority: RCW 49.17.010, 49.17.040, 49.17.050, 49.17.060.

296-24-86110 Mobile tubular welded frame scaffolds. [Statutory Authority: RCW 49.17.010, [49.17].040, and [49.17].-050. 00-08-078, § 296-24-86110, filed 4/4/00, effective

7/1/00.] Repealed by 05-01-054, filed 12/7/04, effective 3/1/05. Statutory Authority: RCW 49.17.010, 49.17.040, 49.17.050, 49.17.060.

296-24-86115 Mobile tubular welded sectional folding scaffolds. [Statutory Authority: RCW 49.17.010, [49.17].040, and [49.17].050. 00-08-078, § 296-24-86115, filed 4/4/00, effective 7/1/00.] Repealed by 05-01-054, filed 12/7/04, effective 3/1/05. Statutory Authority: RCW 49.17.010, 49.17.040, 49.17.050, 49.17.060.

296-24-86120 Mobile tube and coupler scaffolds. [Statutory Authority: RCW 49.17.010, [49.17].040, and [49.17].050. 00-08-078, § 296-24-86120, filed 4/4/00, effective 7/1/00.] Repealed by 05-01-054, filed 12/7/04, effective 3/1/05. Statutory Authority: RCW 49.17.010, 49.17.040, 49.17.050, 49.17.060.

296-24-86125 Mobile work platforms. [Statutory Authority: RCW 49.17.010, [49.17].040, and [49.17].050. 00-08-078, § 296-24-86125, filed 4/4/00, effective 7/1/00.] Repealed by 05-01-054, filed 12/7/04, effective 3/1/05. Statutory Authority: RCW 49.17.010, 49.17.040, 49.17.050, 49.17.060.

296-24-86130 Mobile ladder stands. [Statutory Authority: RCW 49.17.010, [49.17].040, and [49.17].050. 00-08-078, § 296-24-86130, filed 4/4/00, effective 7/1/00.] Repealed by 05-01-054, filed 12/7/04, effective 3/1/05. Statutory Authority: RCW 49.17.010, 49.17.040, 49.17.050, 49.17.060.

296-24-870 Power platforms for exterior building maintenance. [Statutory Authority: Chapter 49.17 RCW. 90-09-026 (Order 90-01), § 296-24-870, filed 4/10/90, effective 5/25/90; Order 73-5, § 296-24-870, filed 5/9/73 and Order 73-4, § 296-24-870, filed 5/7/73.] Repealed by 00-08-078, filed 4/4/00, effective 7/1/00. Statutory Authority: RCW 49.17.010, [49.17].040, and [49.17].-050.

296-24-87001 Definitions. [Statutory Authority: Chapter 49.17 RCW. 94-15-096 (Order 94-07), § 296-24-87001, filed 7/20/94, effective 9/20/94; 90-09-026 (Order 90-01), § 296-24-87001, filed 4/10/90, effective 5/25/90; Order 73-5, § 296-24-87001, filed 5/9/73 and Order 73-4, § 296-24-87001, filed 5/7/73.] Repealed by 00-08-078, filed 4/4/00, effective 7/1/00. Statutory Authority: RCW 49.17.010, [49.17].040, and [49.17].050.

296-24-87003 General requirements. [Order 76-6, § 296-24-87003, filed 3/1/76; Order 73-5, § 296-24-87003, filed 5/9/73 and Order 73-4, § 296-24-87003, filed 5/7/73.] Repealed by 90-09-026 (Order 90-01), filed 4/10/90, effective 5/25/90. Statutory Authority: Chapter 49.17 RCW.

296-24-87005 Type F powered platforms. [Order 76-6, § 296-24-87005, filed 3/1/76; Order 73-5, § 296-24-87005, filed 5/9/73 and Order 73-4, § 296-24-87005, filed 5/7/73.] Repealed by 90-09-026 (Order 90-01), filed 4/10/90, effective 5/25/90. Statutory Authority: Chapter 49.17 RCW.

296-24-87007 Type T powered platforms. [Order 73-5, § 296-24-87007, filed 5/9/73 and Order 73-4, § 296-24-87007, filed 5/7/73.] Repealed by 90-09-026 (Order 90-01), filed 4/10/90, effective 5/25/90. Statutory Authority: Chapter 49.17 RCW.

296-24-87009 Inspections and tests. [Statutory Authority: Chapter 49.17 RCW. 90-09-026 (Order 90-01), § 296-24-87009, filed 4/10/90, effective 5/25/90; Order 73-5, § 296-24-87009, filed 5/9/73 and Order 73-4, § 296-24-87009, filed 5/7/73.] Repealed by 00-08-078, filed 4/4/00, effective 7/1/00. Statutory Authority: RCW 49.17.010, [49.17].040, and [49.17].050.

296-24-87011 Powered platform installations—Affected parts of buildings. [Statutory Authority: Chapter 49.17 RCW. 91-24-017 (Order 91-07), § 296-24-87011, filed 11/22/91, effective 12/24/91; 90-09-026 (Order 90-01), § 296-24-87011, filed 4/10/90, effective 5/25/90.] Repealed by 00-08-078, filed 4/4/00, effective 7/1/00. Statutory Authority: RCW 49.17.010, [49.17].040, and [49.17].050.

296-24-87013 Powered platform installations—Equipment. [Statutory Authority: Chapter 49.17 RCW. 94-15-096 (Order 94-07), § 296-24-87013, filed 7/20/94, effective 9/20/94; 90-09-026 (Order 90-01), § 296-24-87013, filed 4/10/90, effective 5/25/90.] Repealed by 00-08-078, filed 4/4/00, effective 7/1/00. Statutory Authority: RCW 49.17.010, [49.17].040, and [49.17].050.

296-24-87015 Maintenance. [Statutory Authority: Chapter 49.17 RCW. 94-15-096 (Order 94-07), § 296-24-87015, filed 7/20/94, effective 9/20/94; 90-09-026 (Order 90-01), § 296-24-87015, filed 4/10/90, effective 5/25/90.] Repealed by 00-08-078, filed 4/4/00, effective 7/1/00. Statutory Authority: RCW 49.17.010, [49.17].040, and [49.17].050.

296-24-87017 Operations. [Statutory Authority: Chapter 49.17 RCW. 90-09-026 (Order 90-01), § 296-24-87017, filed 4/10/90, effective 5/25/90.] Repealed by 00-08-078, filed 4/4/00, effective 7/1/00. Statutory Authority: RCW 49.17.010, [49.17].040, and [49.17].050.

296-24-87019 Personal fall protection. [Statutory Authority: Chapter 49.17 RCW. 90-09-026 (Order 90-01), § 296-24-87019, filed 4/10/90, effective 5/25/90.] Repealed by 00-08-078, filed 4/4/00, effective 7/1/00. Statutory Authority: RCW 49.17.010, [49.17].040, and [49.17].050.

296-24-87031 Appendix A—Guidelines (advisory). [Statutory Authority: Chapter 49.17 RCW. 94-15-096 (Order 94-07), § 296-24-87031, filed 7/20/94, effective 9/20/94; 90-09-026 (Order 90-01), § 296-24-87031, filed 4/10/90, effective 5/25/90.] Repealed by 00-08-078, filed 4/4/00, effective 7/1/00. Statutory Authority: RCW 49.17.010, [49.17].040, and [49.17].050.

296-24-87033 Appendix B—Exhibits (advisory). [Statutory Authority: Chapter 49.17 RCW. 90-09-026 (Order 90-01), § 296-24-87033, filed 4/10/90, effective 5/25/90.] Repealed by 00-08-078, filed 4/4/00, effective 7/1/00. Statutory Authority: RCW 49.17.010, [49.17].040, and [49.17].-050.

296-24-87035 Appendix C—Personal fall arrest system (Part I—Mandatory; Parts II and III—Nonmandatory). [Statutory Authority: Chapter 49.17 RCW. 91-03-044 (Order 90-18), § 296-24-87035, filed 1/10/91, effective 2/12/91; 90-09-026 (Order 90-01), § 296-24-87035, filed 4/10/90, effective 5/25/90.] Repealed by 00-08-078, filed 4/4/00, effective 7/1/00. Statutory Authority: RCW 49.17.010, [49.17].040, and [49.17].050.

296-24-87037 Appendix D—Existing installations (mandatory). [Statutory Authority: Chapter 49.17 RCW. 90-09-026 (Order 90-01), § 296-24-87037, filed 4/10/90, effective 5/25/90.] Repealed by 00-08-078, filed 4/4/00, effective 7/1/00. Statutory Authority: RCW 49.17.010, [49.17].-040, and [49.17].050.

296-24-875 Elevating work platforms. [Statutory Authority: RCW 49.17.010, [49.17].040, and [49.17].050. 00-08-078, § 296-24-875, filed 4/4/00, effective 7/1/00.] Repealed by 06-19-073, filed 9/19/06, effective 1/1/07. Statutory Authority: RCW 49.17.010, 49.17.040, 49.17.050, 49.17.060.

296-24-87505 Self-propelled elevating work platforms. [Statutory Authority: RCW 49.17.010, [49.17].040, and [49.17].-050. 00-08-078, § 296-24-87505, filed 4/4/00, effective 7/1/00.] Repealed by 06-19-073, filed 9/19/06, effective 1/1/07. Statutory Authority: RCW 49.17.010, 49.17.-040, 49.17.050, 49.17.060.

296-24-87510 Boom supported elevating work platforms. [Statutory Authority: RCW 49.17.010, [49.17].040, and [49.17].-050. 00-08-078, § 296-24-87510, filed 4/4/00, effective 7/1/00.] Repealed by 06-19-073, filed 9/19/06, effective 1/1/07. Statutory Authority: RCW 49.17.010, 49.17.040, 49.17.050, 49.17.060.

296-24-87515 Aerial lifts. [Statutory Authority: RCW 49.17.010, [49.17].040, and [49.17].050. 00-08-078, § 296-24-87515, filed 4/4/00, effective 7/1/00.] Repealed by 06-19-073, filed 9/19/06, effective 1/1/07. Statutory Authority: RCW 49.17.010, 49.17.040, 49.17.050, 49.17.060.

296-24-880 Power platforms for exterior building maintenance. [Statutory Authority: RCW 49.17.010, [49.17].040, and [49.17].050. 00-08-078, § 296-24-880, filed 4/4/00, effective 7/1/00.] Repealed by 06-19-073, filed 9/19/06, effective 1/1/07. Statutory Authority: RCW 49.17.010, 49.17.040, 49.17.050, 49.17.060.

296-24-88005 Definitions. [Statutory Authority: RCW 49.17.010, [49.17].040, and [49.17].050. 00-08-078, § 296-24-88005, filed 4/4/00, effective 7/1/00.] Repealed by 06-19-073, filed 9/19/06, effective 1/1/07. Statutory Authority: RCW 49.17.010, 49.17.040, 49.17.050, 49.17.060.

296-24-88010 Inspections and tests. [Statutory Authority: RCW 49.17.010, [49.17].040, and [49.17].050. 00-08-078, § 296-24-88010, filed 4/4/00, effective 7/1/00.] Repealed by 06-19-073, filed 9/19/06, effective 1/1/07. Statutory Authority: RCW 49.17.010, 49.17.040, 49.17.050, 49.17.060.

296-24-88015 Powered platform installations—Affected parts of buildings. [Statutory Authority: RCW 49.17.010, [49.17].040, and [49.17].050. 00-08-078, § 296-24-88015, filed 4/4/00, effective 7/1/00.] Repealed by 06-19-073, filed 9/19/06, effective 1/1/07. Statutory Authority: RCW 49.17.010, 49.17.040, 49.17.050, 49.17.060.

296-24-88020 Powered platform installations—Equipment. [Statutory Authority: RCW 49.17.010, 49.17.040, 49.17.050, and 49.17.060. 04-14-028, § 296-24-88020, filed 6/29/04, effective 1/1/05. Statutory Authority: RCW 49.17.010, [49.17].040, and [49.17].050. 00-08-078, § 296-24-88020, filed 4/4/00, effective 7/1/00.] Repealed by 06-19-073, filed 9/19/06, effective 1/1/07. Statutory Authority: RCW 49.17.010, 49.17.040, 49.17.050, 49.17.060.

296-24-88025 Maintenance. [Statutory Authority: RCW 49.17.010, [49.17].040, and [49.17].050. 00-08-078, § 296-24-88025, filed 4/4/00, effective 7/1/00.] Repealed by 06-19-073, filed 9/19/06, effective 1/1/07. Statutory Authority: RCW 49.17.010, 49.17.040, 49.17.050, 49.17.060.

296-24-88030 Operations. [Statutory Authority: RCW 49.17.010, [49.17].040, and [49.17].050. 00-08-078, § 296-24-88030, filed 4/4/00, effective 7/1/00.] Repealed by 06-19-073, filed 9/19/06, effective 1/1/07. Statutory Authority: RCW 49.17.010, 49.17.040, 49.17.050, 49.17.060.

296-24-88035 Personal fall protection. [Statutory Authority: RCW 49.17.010, [49.17].040, and [49.17].050. 00-08-078, § 296-24-88035, filed 4/4/00, effective 7/1/00.] Repealed by 06-19-073, filed 9/19/06, effective 1/1/07. Statutory Authority: RCW 49.17.010, 49.17.040, 49.17.050, 49.17.060.

296-24-88040 Appendix A—Guidelines (advisory). [Statutory Authority: RCW 49.17.010, [49.17].040, and [49.17].050. 00-08-078, § 296-24-88040, filed 4/4/00, effective 7/1/00.] Repealed by 06-19-073, filed 9/19/06, effective 1/1/07. Statutory Authority: RCW 49.17.010, 49.17.040, 49.17.050, 49.17.060.

296-24-88045 Appendix B—Exhibits (advisory). [Statutory Authority: RCW 49.17.010, [49.17].040, and [49.17].050. 00-08-078, § 296-24-88045, filed 4/4/00, effective 7/1/00.] Repealed by 06-19-073, filed 9/19/06, effective 1/1/07. Statutory Authority: RCW 49.17.010, 49.17.040, 49.17.050, 49.17.060.

296-24-88055 Appendix D—Existing installations (mandatory). [Statutory Authority: RCW 49.17.010, [49.17].040, and [49.17].050. 00-08-078, § 296-24-88055, filed 4/4/00, effective 7/1/00.] Repealed by 06-19-073, filed 9/19/06, effective 1/1/07. Statutory Authority: RCW 49.17.010, 49.17.040, 49.17.050, 49.17.060.

296-24-885 Vehicle-mounted elevating and rotating work platforms. [Order 76-6, § 296-24-885, filed 3/1/76; Order 73-5, § 296-24-885, filed 5/9/73 and Order 73-4, § 296-24-885, filed 5/7/73.] Repealed by 00-08-078, filed 4/4/00, effective 7/1/00. Statutory Authority: RCW 49.17.010, [49.17].040, and [49.17].050.

296-24-88501 Definitions. [Statutory Authority: Chapter 49.17 RCW. 94-15-096 (Order 94-07), § 296-24-88501, filed 7/20/94, effective 9/20/94; Order 76-6, § 296-24-88501, filed 3/1/76; Order 73-5, § 296-24-88501, filed 5/9/73 and Order 73-4, § 296-24-88501, filed 5/7/73.] Repealed by 00-08-078, filed 4/4/00, effective 7/1/00. Statutory Authority: RCW 49.17.010, [49.17].040, and [49.17].050.

296-24-88503 General requirements. [Statutory Authority: Chapter 49.17 RCW. 91-24-017 (Order 91-07), § 296-24-88503, filed 11/22/91, effective 12/24/91; Order 76-6, § 296-24-88503, filed 3/1/76; Order 73-5, § 296-24-88503, filed 5/9/73 and Order 73-4, § 296-24-88503, filed 5/7/73.] Repealed by 00-08-078, filed 4/4/00, effective 7/1/00. Statutory Authority: RCW 49.17.010, [49.17].-040, and [49.17].050.

296-24-88505 Specific requirements. [Statutory Authority: Chapter 49.17 RCW. 94-15-096 (Order 94-07), § 296-24-88505, filed 7/20/94, effective 9/20/94; Order 76-6, § 296-24-88505, filed 3/1/76.] Repealed by 00-08-078, filed 4/4/00, effective 7/1/00. Statutory Authority: RCW 49.17.010, [49.17].040, and [49.17].050.

296-24-900 Manlifts. [Order 73-5, § 296-24-900, filed 5/9/73 and Order 73-4, § 296-24-900, filed 5/7/73.] Repealed by 06-19-073, filed 9/19/06, effective 1/1/07. Statutory Authority: RCW 49.17.010, 49.17.040, 49.17.050, 49.17.060.

296-24-90001 Definitions. [Statutory Authority: RCW 49.17.010, [49.17].040, and [49.17].050. 00-08-078, § 296-24-90001, filed 4/4/00, effective 7/1/00. Statutory Authority: Chapter 49.17 RCW. 94-15-096 (Order 94-07), § 296-24-90001, filed 7/20/94, effective 9/20/94; Order 73-5, § 296-24-90001, filed 5/9/73 and Order 73-4, § 296-24-90001, filed 5/7/73.] Repealed by 06-19-073, filed 9/19/06, effective 1/1/07. Statutory Authority: RCW 49.17.010, 49.17.040, 49.17.050, 49.17.060.

296-24-90003 General requirements. [Statutory Authority: RCW 49.17.010, 49.17.040, 49.17.050, and 49.17.060. 04-14-028, § 296-24-90003, filed 6/29/04, effective 1/1/05. Statutory Authority: RCW 49.17.010, [49.17].040, and [49.17].050. 00-08-078, § 296-24-90003, filed 4/4/00, effective 7/1/00. Statutory Authority: Chapter 49.17 RCW. 91-24-017 (Order 91-07), § 296-24-90003, filed 11/22/91, effective 12/24/91; Order 76-6, § 296-24-90003, filed 3/1/76; Order 73-5, § 296-24-90003, filed 5/9/73 and Order 73-4, § 296-24-90003, filed 5/7/73.] Repealed by 06-19-073, filed 9/19/06, effective 1/1/07. Statutory Authority: RCW 49.17.010, 49.17.040, 49.17.050, 49.17.060.

296-24-90005 Mechanical requirements. [Statutory Authority: RCW 49.17.010, [49.17].040, and [49.17].050. 00-08-078, § 296-24-90005, filed 4/4/00, effective 7/1/00. Statutory Authority: Chapter 49.17 RCW. 94-15-096 (Order 94-07), § 296-24-90005, filed 7/20/94, effective 9/20/94; 91-24-017 (Order 91-07), § 296-24-90005, filed 11/22/91, effective 12/24/91; Order 74-27, § 296-24-90005, filed 5/7/74; Order 73-5, § 296-24-90005, filed 5/9/73 and Order 73-4, § 296-24-90005, filed 5/7/73.] Repealed by 06-19-073, filed 9/19/06, effective 1/1/07. Statutory Authority: RCW 49.17.010, 49.17.040, 49.17.050, 49.17.060.

296-24-90007 Operating rules. [Statutory Authority: RCW 49.17.010, [49.17].040, and [49.17].050. 00-08-078, § 296-24-90007, filed 4/4/00, effective 7/1/00; Order 73-5, § 296-24-90007, filed 5/9/73 and Order 73-4, § 296-24-90007, filed 5/7/73.] Repealed by 06-19-073, filed 9/19/06, effective 1/1/07. Statutory Authority: RCW 49.17.010, 49.17.040, 49.17.050, 49.17.060.

296-24-90009 Periodic inspection. [Statutory Authority: RCW 49.17.-010, [49.17].040, and [49.17].050. 00-08-078, § 296-24-90009, filed 4/4/00, effective 7/1/00. Statutory Authority: Chapter 49.17 RCW. 94-15-096 (Order 94-07), § 296-24-90009, filed 7/20/94, effective 9/20/94; Order 73-5, § 296-24-90009, filed 5/9/73 and Order 73-4, § 296-24-90009, filed 5/7/73.] Repealed by 06-19-073, filed 9/19/06, effective 1/1/07. Statutory Authority: RCW 49.17.010, 49.17.040, 49.17.050, 49.17.060.

296-24-950 Electrical—Application. [Order 74-27, § 296-24-950, filed 5/7/74.] Repealed by 83-24-013 (Order 83-34), filed 11/30/83. Statutory Authority: RCW 49.17.040 and 49.17.050.

296-24-955 National electrical code. [Statutory Authority: RCW 49.17.040, 49.17.050, 49.17.240, chapters 42.30 and 43.22 RCW. 80-17-015 (Order 80-21), § 296-24-955, filed 11/13/80; 78-12-017 (Order 78-22), § 296-24-955, filed 11/13/78; Order 77-12, § 296-24-955, filed 7/11/77; Order 74-27, § 296-24-955, filed 5/7/74.] Repealed by 82-08-026 (Order 82-10), filed 3/30/82. Statutory Authority: RCW 49.17.040 and 49.17.050.

PART A-1
PURPOSE AND SCOPE

WAC 296-24-003 Subsections, subdivisions, items, subitems, and segments. (1) That portion of section numeration appearing after the chapter designation appears in either a three digit or a five digit format (e.g. 296-24-330 and 296-24-33002). The final two digits of the section number are implied decimal extensions of the first three digits and represent a further division of the three digit enumeration.

(2) Sections of this chapter may be divided into subsections (1), (2), (3), etc., which may in turn be divided into subdivisions (a), (b), (c), etc., which may be further divided into

items (i), (ii), (iii),etc.,which may be further divided into subitems (A), (B), (C), etc.,which may be further divided into segments (I), (II), (III), etc.,all according to the following hierarchy, e.g.

Sections	296-24-330 and 296-24-33002
Subsections	(1) (2)
Subdivisions	(a) (b)
Items	(i) (ii)
Subitems	(A) (B)
Segments	(I) (II)

[Statutory Authority: Chapter 49.17 RCW. 88-23-054 (Order 88-25), § 296-24-003, filed 11/14/88; Order 76-6, § 296-24-003, filed 3/1/76; Order 73-5, § 296-24-003, filed 5/9/73 and Order 73-4, § 296-24-003, filed 5/7/73.]

WAC 296-24-005 Purpose and scope. The rules in this chapter are designed to protect the safety and health of employees by creating a healthy work environment by establishing requirements to control safety hazards in the workplace. Chapter 296-800 WAC, the safety and health core rules, contain safety and health rules that apply to most workplaces. Other special industry rules complement the rules found in this chapter and in the safety and health core rules.

[Statutory Authority: RCW 49.17.010, [49.17].040, and [49.17].050. 01-11-038, § 296-24-005, filed 5/9/01, effective 9/1/01; Order 73-5, § 296-24-005, filed 5/9/73 and Order 73-4, § 296-24-005, filed 5/7/73.]

WAC 296-24-012 Definitions applicable to all sections of this chapter.

Note: Meaning of words. Unless the context indicates otherwise, words used in this chapter shall have the meaning given in this section.

(1) "Approved" means approved by the director of the department of labor and industries or his/her authorized representative: Provided, however, That should a provision of this chapter state that approval by an agency or organization other than the department of labor and industries is required, such as Underwriters' Laboratories or the Mine Safety and Health Administration (MSHA) and the National Institute for Occupational Safety and Health (NIOSH), the provisions of WAC 296-800-360 shall apply.

(2) "Authorized person" means a person approved or assigned by the employer to perform a specific type of duty or duties or to be at a specific location or locations at the job site.

(3) "Competent person" means one who is capable of identifying existing and predictable hazards in the surroundings or working conditions which are unsanitary, hazardous, or dangerous to employees, and who has authorization to take prompt corrective action to eliminate them.

(4) "Department" means the department of labor and industries.

(5) "Director" means the director of the department of labor and industries, or his/her designated representative.

(6) "Employer" means any person, firm, corporation, partnership, business trust, legal representative, or other business entity which engages in any business, industry, profession, or activity in this state and employs one or more employees or who contracts with one or more persons, the essence of which is the personal labor of such person or persons and includes the state, counties, cities, and all municipal corporations, public corporations, political subdivisions of the state, and charitable organizations: Provided, That any person, partnership, or business entity not having employees, and who is covered by the industrial insurance act shall be considered both an employer and an employee.

(7) "First aid" means, for purposes of this section, the extent of treatment that could be expected to be given by a person trained in basic first aid, using supplies from a first-aid kit. Tests, such as X rays, shall not be confused with treatment.

(8) "Hazard" means that condition, potential or inherent, which can cause injury, death, or occupational disease.

(9) "Hospitalization" means to be admitted to a hospital or an equivalent medical facility on an emergent in-patient basis requiring an overnight stay.

(10) "Qualified" means one who, by possession of a recognized degree, certificate, or professional standing, or who by extensive knowledge, training, and experience, has successfully demonstrated the ability to solve or resolve problems relating to the subject matter, the work, or the project.

(11) "Safety factor" means the ratio of the ultimate breaking strength of a member or piece of material or equipment to the actual working stress or safe load when in use.

(12) "Safety and health standard" means a standard which requires the adoption or use of one or more practices, means, methods, operations, or processes reasonably necessary or appropriate to provide safe or healthful employment and places of employment.

(13) "Shall" means mandatory.

(14) "Should" means recommended.

(15) "Standard safeguard" means a device designed and constructed with the object of removing the hazard of accident incidental to the machine, appliance, tool, building, or equipment to which it is attached.

Standard safeguards shall be constructed of either metal or wood or other suitable material or a combination of these. The final determination of the sufficiency of any safeguard rests with the director of the department of labor and industries.

(16) "Suitable" means that which fits, or has the qualities or qualifications to meet a given purpose, occasion, condition, function, or circumstance.

(17) "Working day" means a calendar day, except Saturdays, Sundays, and legal holidays as set forth in RCW 1.16.050, as now or hereafter amended, and for the purposes of the computation of time within which an act is to be done under the provisions of this chapter, shall be computed by excluding the first working day and including the last working day.

(18) "Worker," "personnel," "person," "employee," and other terms of like meaning, unless the context of the provision containing such term indicates otherwise, mean an

employee of an employer who is employed in the business of his/her employer whether by way of manual labor or otherwise and every person in this state who is engaged in the employment of or who is working under an independent contract the essence of which is his/her personal labor for an employer whether by manual labor or otherwise.

(19) "Work place" means any plant, yard, premises, room, or other place where an employee or employees are employed for the performance of labor or service over which the employer has the right of access or control, and includes, but is not limited to, all work places covered by industrial insurance under Title 51 RCW, as now or hereafter amended.

(20) Abbreviations used in this chapter:

(a) "ANSI" means American National Standards Institute.

(b) "API" means American Petroleum Institute.

(c) "ASA" means American Standards Association.

(d) "ASAE" means American Society of Agricultural Engineers.

(e) "ASHRE" means American Society of Heating and Refrigeration Engineers.

(f) "ASME" means American Society for Mechanical Engineers.

(g) "ASTM" means American Society for Testing and Materials.

(h) "AWS" means American Welding Society.

(i) "BTU" means British thermal unit.

(j) "BTUH" means British thermal unit per hour.

(k) "CFM" means cubic feet per minute.

(l) "CFR" means Code of Federal Regulations.

(m) "CGA" means Compressed Gas Association.

(n) "CIE" means Commission Internationale de l' Eclairage.

(o) "DOT" means department of transportation.

(p) "FRP" means fiberglass reinforced plastic.

(q) "GPM" means gallons per minute.

(r) "ICC" means Interstate Commerce Commission.

(s) "ID" means inside diameter.

(t) "LPG" means liquefied petroleum gas.

(u) "MCA" means Manufacturing Chemist Association. (New name: Chemical Manufacturers Association.)

(v) "NBFU" means National Board of Fire Underwriters.

(w) "NEMA" means National Electrical Manufacturing Association.

(x) "NFPA" means National Fire Protection Association.

(y) "NTP" means normal temperature and pressure.

(z) "OD" means outside diameter.

(aa) "PSI" means pounds per square inch.

(bb) "PSIA" means pounds per square inch atmospheric.

(cc) "PSIG" means pounds per square inch gauge.

(dd) "RMA" means Rubber Manufacturers Association.

(ee) "SAE" means Society of Automotive Engineers.

(ff) "TFI" means The Fertilizer Institute.

(gg) "TSC" means Trailer Standard Code.

(hh) "UL" means Underwriters' Laboratories, Inc.

(ii) "USASI" means United States of America Standards Institute.

(jj) "USC" means United States Code.

(kk) "USCG" means United States Coast Guard.

(ll) "WAC" means Washington Administrative Code.

(mm) "WISHA" means Washington Industrial Safety and Health Act of 1973.

[Statutory Authority: RCW 49.17.010, 49.17.040, 49.17.050, 49.17.060. 09-01-158, § 296-24-012, filed 12/23/08, effective 3/1/09; 04-07-161, § 296-24-012, filed 3/23/04, effective 6/1/04. Statutory Authority: RCW 49.17.010, [49.17].040, [49.17].050. 02-12-098, § 296-24-012, filed 6/5/02, effective 8/1/02. Statutory Authority: Chapter 49.17 RCW. 94-15-096 (Order 94-07), § 296-24-012, filed 7/20/94, effective 9/20/94; 89-11-035 (Order 89-03), § 296-24-012, filed 5/15/89, effective 6/30/89; Order 73-5, § 296-24-012, filed 5/9/73 and Order 73-4, § 296-24-012, filed 5/7/73.]

PART A-2
PERSONAL PROTECTIVE EQUIPMENT RESERVE

Note: Personal protective equipment requirements have been moved to WAC 296-800-160.

Note: Electrical protective equipment requirements have been moved to WAC 296-24-980.

PART A-3
LATE NIGHT RETAIL WORKER CRIME PROTECTION

Note: Late night retail worker crime protection has been moved to chapter 296-832 WAC.

PART A-4
SAFETY PROCEDURES

Note: Safety procedures has been moved to chapter 296-803 WAC.

PART B-2
SAFETY COLOR CODE FOR MARKING PHYSICAL HAZARDS, ETC., WINDOW WASHING

Note: Safety color code for marking physical hazards, etc., window washing has been moved to WAC 296-800-11045.

PART C
MACHINERY AND MACHINE GUARDING

Note: Machinery and machine guarding has been moved to chapter 296-806 WAC.

PART D
MATERIALS HANDLING AND STORAGE, INCLUDING CRANES, DERRICKS, ETC., AND RIGGING

Handling and Storage—Cranes, Derricks, etc.

WAC 296-24-215 Materials handling and storage—Handling materials—General.

[Order 73-5, § 296-24-215, filed 5/9/73 and Order 73-4, § 296-24-215, filed 5/7/73.]

WAC 296-24-21501 Use of mechanical equipment. Where mechanical handling equipment is used, sufficient safe clearances shall be allowed for aisles, at loading docks, through doorways and wherever turns or passage must be made. Aisles and passageways shall be kept clear and in good repair, with no obstruction across or in aisles that could create a hazard. Permanent aisles and passageways shall be appropriately marked.

[Order 73-5, § 296-24-21501, filed 5/9/73 and Order 73-4, § 296-24-21501, filed 5/7/73.]

WAC 296-24-21509 Clearance limits. Clearance signs to warn of clearance limits shall be provided.

[Order 73-5, § 296-24-21509, filed 5/9/73 and Order 73-4, § 296-24-21509, filed 5/7/73.]

WAC 296-24-21511 Rolling railroad cars. (1) Derail and/or bumper blocks shall be provided on spur railroad tracks where a rolling car could contact other cars being worked, enter a building, work or traffic area. This does not apply to cars being moved by a locomotive, switch engine, donkey engine, or a car puller, but only to cars which are "cut loose." The standard does not apply to "cut loose" cars in railroad yards where trains are made up using gravity feed arrangements.

(2) A clearly audible warning system shall be employed when cars are being moved by car pullers or locomotives, and when the person responsible for the moving does not have assurance that the area is clear, and it is safe to move the car or cars.

[Statutory Authority: Chapter 49.17 RCW. 89-11-035 (Order 89-03), § 296-24-21511, filed 5/15/89, effective 6/30/89; Order 74-27, § 296-24-21511, filed 5/7/74; Order 73-5, § 296-24-21511, filed 5/9/73 and Order 73-4, § 296-24-21511, filed 5/7/73.]

WAC 296-24-21513 Guarding. Covers and/or guardrails shall be provided to protect personnel from the hazards of open pits, tanks, vats, ditches, etc.

[Order 73-5, § 296-24-21513, filed 5/9/73 and Order 73-4, § 296-24-21513, filed 5/7/73.]

WAC 296-24-235 Overhead and gantry cranes.

[Order 73-5, § 296-24-235, filed 5/9/73 and Order 73-4, § 296-24-235, filed 5/7/73.]

WAC 296-24-23501 Definitions. (1) A "crane" is a machine for lifting and lowering a load and moving it horizontally, with the hoisting mechanism and integral part of the machine. Cranes whether fixed or mobile are driven manually or by power.

(2) An "automatic crane" is a crane which when activated operates through a preset cycle or cycles.

(3) A "cab-operated crane" is a crane controlled by an operator in a cab located on the bridge or trolley.

(4) "Cantilever gantry crane" means a gantry or semigantry crane in which the bridge girders or trusses extend transversely beyond the crane runway on one or both sides.

(5) "Floor-operated crane" means a crane which is pendant or nonconductive rope controlled by an operator on the floor or an independent platform.

(6) "Gantry crane" means a crane similar to an overhead crane except that the bridge for carrying the trolley or trolleys is rigidly supported on two or more legs running on fixed rails or other runway.

(7) "Hot metal handling crane" means an overhead crane used for transporting or pouring molten material.

(8) "Overhead crane" means a crane with a movable bridge carrying a movable or fixed hoisting mechanism and traveling on an overhead fixed runway structure.

(9) "Power-operated crane" means a crane whose mechanism is driven by electric, air, hydraulic, or internal combustion means.

(10) A "pulpit-operated crane" is a crane operated from a fixed operator station not attached to the crane.

(11) A "remote-operated crane" is a crane controlled by an operator not in a pulpit or in the cab attached to the crane, by any method other than pendant or rope control.

(12) A "semigantry crane" is a gantry crane with one end of the bridge rigidly supported on one or more legs that run on a fixed rail or runway, the other end of the bridge being supported by a truck running on an elevated rail or runway.

(13) "Storage bridge crane" means a gantry type crane of long span usually used for bulk storage of material; the bridge girders or trusses are rigidly or nonrigidly supported on one or more legs. It may have one or more fixed or hinged cantilever ends.

(14) "Wall crane" means a crane having a jib with or without trolley and supported from a side wall or line of columns of a building. It is a traveling type and operates on a runway attached to the side wall or columns.

(15) "Appointed" means assigned specific responsibilities by the employer or the employer's representative.

(16) "ANSI" means the American National Standards Institute.

(17) An "auxiliary hoist" is a supplemental hoisting unit of lighter capacity and usually higher speed than provided for the main hoist.

(18) A "brake" is a device used for retarding or stopping motion by friction or power means.

(19) A "drag brake" is a brake which provides retarding force without external control.

(20) A "holding brake" is a brake that automatically prevents motion when power is off.

(21) "Bridge" means that part of a crane consisting of girders, trucks, end ties, footwalks, and drive mechanism which carries the trolley or trollies.

(22) "Bridge travel" means the crane movement in a direction parallel to the crane runway.

(23) A "bumper" (buffer) is an energy absorbing device for reducing impact when a moving crane or trolley reaches the end of its permitted travel; or when two moving cranes or trolleys come in contact.

(24) The "cab" is the operator's compartment on a crane.

(25) "Clearance" means the distance from any part of the crane to a point of the nearest obstruction.

(26) "Collectors" (current) are contacting devices for collecting current from runway or bridge conductors.

(27) "Conductors, bridge" are the electrical conductors located along the bridge structure of a crane to provide power to the trolley.

(28) "Conductors, runway" (main) are the electrical conductors located along a crane runway to provide power to the crane.

(29) The "control braking means" is a method of controlling crane motor speed when in an overhauling condition.

(30) "Countertorque" means a method of control by which the power to the motor is reversed to develop torque in the opposite direction.

(31) "Dynamic" means a method of controlling crane motor speeds when in the overhauling condition to provide a retarding force.

(32) "Regenerative" means a form of dynamic braking in which the electrical energy generated is fed back into the power system.

(33) "Mechanical" means a method of control by friction.

(34) "Controller, spring return" means a controller which when released will return automatically to a neutral position.

(35) "Designated" means selected or assigned by the employer or the employer's representative as being qualified to perform specific duties.

(36) A "drift point" means a point on a travel motion controller which releases the brake while the motor is not energized. This allows for coasting before the brake is set.

(37) The "drum" is the cylindrical member around which the ropes are wound for raising or lowering the load.

(38) An "equalizer" is a device which compensates for unequal length or stretch of a rope.

(39) "Exposed" means capable of being contacted inadvertently. Applied to hazardous objects not adequately guarded or isolated.

(40) "Fail-safe" means a provision designed to automatically stop or safely control any motion in which a malfunction occurs.

(41) "Footwalk" means the walkway with handrail, attached to the bridge or trolley for access purposes.

(42) A "hoist" is an apparatus which may be a part of a crane, exerting a force for lifting or lowering.

(43) "Hoist chain" means the load bearing chain in a hoist.

Note: Chain properties do not conform to those shown in ANSI B30.9-1971, Safety Code for Slings.

(44) "Hoist motion" means that motion of a crane which raises and lowers a load.

(45) "Load" means the total superimposed weight on the load block or hook.

(46) The "load block" is the assembly of hook or shackle, swivel, bearing, sheaves, pins, and frame suspended by the hoisting rope.

(47) "Magnet" means an electromagnetic device carried on a crane hook to pick up loads magnetically.

(48) "Main hoist" means the hoist mechanism provided for lifting the maximum rated load.

(49) A "man trolley" is a trolley having an operator's cab attached thereto.

(50) "Rated load" means the maximum load for which a crane or individual hoist is designed and built by the manufacturer and shown on the equipment nameplate(s).

(51) "Rope" refers to wire rope, unless otherwise specified.

(52) "Running sheave" means a sheave which rotates as the load block is raised or lowered.

(53) "Runway" means an assembly of rails, beams, girders, brackets, and framework on which the crane or trolley travels.

(54) "Side pull" means that portion of the hoist pull acting horizontally when the hoist lines are not operated vertically.

(55) "Span" means the horizontal distance center to center of runway rails.

(56) "Standby crane" means a crane which is not in regular service but which is used occasionally or intermittently as required.

(57) A "stop" is a device to limit travel of a trolley or crane bridge. This device normally is attached to a fixed structure and normally does not have energy absorbing ability.

(58) A "switch" is a device for making, breaking, or for changing the connections in an electric circuit.

(59) An "emergency stop switch" is a manually or automatically operated electric switch to cut off electric power independently of the regular operating controls.

(60) A "limit switch" is a switch which is operated by some part or motion of a power-driven machine or equipment to alter the electric circuit associated with the machine or equipment.

(61) A "main switch" is a switch controlling the entire power supply to the crane.

(62) A "master switch" is a switch which dominates the operation of contractors, relays, or other remotely operated devices.

(63) The "trolley" is the unit which travels on the bridge rails and carries the hoisting mechanism.

(64) "Trolley travel" means the trolley movement at right angles to the crane runway.

(65) "Truck" means the unit consisting of a frame, wheels, bearings, and axles which supports the bridge girders or trolleys.

[Order 73-5, § 296-24-23501, filed 5/9/73 and Order 73-4, § 296-24-23501, filed 5/7/73.]

WAC 296-24-23503 General requirements. (1) Application. This section applies to overhead and gantry cranes, including semigantry, cantilever gantry, wall cranes, storage bridge cranes, and others having the same fundamental characteristics. These cranes are grouped because they all have trolleys and similar travel characteristics.

(2) New and existing equipment. All new overhead and gantry cranes constructed and installed on or after the effective date of these standards, shall meet the design specifications of the American National Standards Institute, Safety Code for Overhead and Gantry Cranes, ANSI B30.2.0-1967. Overhead and gantry cranes constructed before the effective date of these standards, should be modified to conform to those design specifications, unless it can be shown that the crane cannot feasibly or economically be altered and that the crane substantially complies with the requirements of this section. (See chapter 296-900 WAC, Administrative rules, for information on applying for a variance.)

(3) Modifications. Cranes may be modified and rerated provided such modifications and the supporting structure are checked thoroughly for the new rated load by a qualified engineer or the equipment manufacturer. The crane shall be tested in accordance with WAC 296-24-23521(2). New rated load shall be displayed in accordance with (5) of this section.

(4) Wind indicators and rail clamps.

(a) Outdoor storage bridges shall be provided with automatic rail clamps. A wind-indicating device shall be provided which will give a visible or audible alarm to the bridge operator at a predetermined wind velocity. If the clamps act on the

rail heads, any beads or weld flash on the rail heads shall be ground off.

(b) Calculations for wind pressure on outside overhead traveling cranes shall be based on not less than 30 pounds per square foot of exposed surface.

(5) Rated load marking. The rated load of the crane shall be plainly marked on each side of the crane, and if the crane has more than one hoisting unit, each hoist shall have its rated load marked on it or its load block and this marking shall be clearly legible from the ground or floor.

(6) Clearance from obstruction.

(a) Minimum clearance of 3 inches overhead and 2 inches laterally shall be provided and maintained between crane and obstructions in conformity with Specification No. 61 Crane Manufactures Association of America, Inc., 8720 Red Oak Blvd., Suite 201, Charlotte, NC 28217.

(b) Where passageways or walkways are provided obstructions shall not be placed so that safety of personnel will be jeopardized by movements of the crane.

(7) Clearance between parallel cranes. If the runways of two cranes are parallel, and there are no intervening walls or structure, there shall be adequate clearance provided and maintained between the two bridges.

(8) Designated personnel. Only designated personnel shall be permitted to operate a crane covered by this section.

[Statutory Authority: RCW 49.17.010, 49.17.040, 49.17.050, 49.17.060. 07-03-163, § 296-24-23503, filed 1/24/07, effective 4/1/07. Statutory Authority: RCW 49.17.010, [49.17].040, and [49.17].050. 01-11-038, § 296-24-23503, filed 5/9/01, effective 9/1/01. Statutory Authority: Chapter 49.17 RCW. 94-15-096 (Order 94-07), § 296-24-23503, filed 7/20/94, effective 9/20/94; Order 74-27, § 296-24-23503, filed 5/7/74; Order 73-5, § 296-24-23503, filed 5/9/73 and Order 73-4, § 296-24-23503, filed 5/7/73.]

WAC 296-24-23505 Cabs. (1) Cab location.

(a) The general arrangement of the cab and the location of control and protective equipment shall be such that all operating handles are within convenient reach of the operator when facing the area to be served by the load hook, or while facing the direction of travel of the cab. The arrangement shall allow the operator a full view of the load hook in all positions.

(b) The cab shall be located to afford a minimum of 3 inches clearance from all fixed structures within its area of possible movement.

(c) The clearance of the cab above the working floor or passageway should be not less than seven feet.

(2) Access to crane. Access to the cab and/or bridge walkway shall be by a conveniently placed fixed ladder, stairs, or platform, requiring no step over any gap exceeding 12 inches. Fixed ladders shall be in conformance with the American National Standards Institute, Safety Code for Fixed Ladders, ANSI A14.3-1956.

(3) Fire extinguisher. A carbon dioxide, dry-chemical, or equivalent hand fire extinguisher should be kept in the cab. Carbon tetrachloride extinguishers shall not be used.

Note: For additional requirements relating to portable fire extinguishers see WAC 296-800-300.

(4) Lighting. Light in the cab shall be sufficient to enable the operator to see clearly enough to perform the work.

[Statutory Authority: RCW 49.17.010, [49.17].040, and [49.17].050. 01-17-033, § 296-24-23505, filed 8/8/01, effective 9/1/01. Statutory Authority: Chapter 49.17 RCW. 94-15-096 (Order 94-07), § 296-24-23505, filed 7/20/94, effective 9/20/94; Order 73-5, § 296-24-23505, filed 5/9/73 and Order 73-4, § 296-24-23505, filed 5/7/73.]

WAC 296-24-23507 Footwalks and ladders. (1) Location of footwalks.

(a) If sufficient headroom is available on cab-operated cranes, a footwalk shall be provided on the drive side along the entire length of the bridge of all cranes having the trolley running on the top of the girders. To give sufficient access to the opposite side of the trolley, there should be provided either a footwalk mounted on the trolley, a suitable footwalk or platform in the building, or a footwalk on the opposite side of the crane at least twice the length of the trolley.

(b) Footwalks should be located to give a headroom not less than 78 inches. In no case shall less than 48 inches be provided. If 48 inches of headroom cannot be provided, footwalks should be omitted from the crane and a stationary platform or landing stage built for workers making repairs.

(2) Construction of footwalks.

(a) Footwalks shall be of rigid construction and designed to sustain a distributed load of at least 50 pounds per square foot.

(b) Footwalks shall have a walking surface of antislip type.

Note: Wood will meet this requirement.

(c) Footwalks should be continuous and permanently secured.

(d) Footwalks should have a clear passageway at least 18 inches wide except opposite the bridge motor, where they should be not less than 15 inches. The inner edge shall extend at least to the line of the outside edge of the lower cover plate or flange of the girder.

(3) Toeboards and handrails for footwalks. Toeboards and handrails shall be in compliance with WAC 296-24-750 through 296-24-75011 and WAC 296-800-260.

(4) Ladders and stairways.

(a) Gantry cranes shall be provided with ladders or stairways extending from the ground to the footwalk or cab platform.

(b) Stairways shall be equipped with rigid and substantial metal handrails. Walking surfaces shall be of an antislip type.

(c) Ladders shall be permanently and securely fastened in place and shall be constructed in compliance with chapter 296-876 WAC, Ladders, portable and fixed.

[Statutory Authority: RCW 49.17.010, 49.17.040, 49.17.050, 49.17.060. 06-16-020, § 296-24-23507, filed 7/24/06, effective 12/1/06. Statutory Authority: RCW 49.17.010, [49.17].040, and [49.17].050. 01-11-038, § 296-24-23507, filed 5/9/01, effective 9/1/01. Statutory Authority: Chapter 49.17 RCW. 94-15-096 (Order 94-07), § 296-24-23507, filed 7/20/94, effective 9/20/94; Order 73-5, § 296-24-23507, filed 5/9/73 and Order 73-4, § 296-24-23507, filed 5/7/73.]

WAC 296-24-23509 Stops, bumpers, rail sweeps, and guards. (1) Trolley stops.

(a) Stops shall be provided at the limits of travel of the trolley.

(b) Stops shall be fastened to resist forces applied when contacted.

(c) A stop engaging the tread of the wheel shall be of a height at least equal to the radius of the wheel.

(2) Bridge bumpers.

(a) A crane shall be provided with bumpers or other automatic means providing equivalent effect, unless the crane travels at a slow rate of speed and has a faster deceleration rate due to the use of sleeve bearings, or is not operated near the ends of bridge and trolley travel, or is restricted to a limited distance by the nature of the crane operation and there is no hazard of striking any object in this limited distance or is used in similar operating conditions. The bumpers shall be capable of stopping the crane (not including the lifted load) at an average rate of deceleration not to exceed 3 ft/s/s when traveling in either direction at 20 percent of the rated load speed.

(i) The bumpers shall have sufficient energy absorbing capacity to stop the crane when traveling at a speed of at least 40 percent of rated load speed.

(ii) The bumpers shall be so mounted that there is no direct shear on bolts.

(iii) Bumpers shall be so designed and installed as to minimize parts falling from the crane in case of breakage.

(3) Trolley bumpers.

(a) A trolley shall be provided with bumpers or other automatic means of equivalent effect, unless the trolley travels at a slow rate of speed, or is not operated near the ends of bridge and trolley travel, or is restricted to a limited distance of the runway and there is no hazard of striking any object in this limited distance, or is used in similar operating conditions. The bumpers shall be capable of stopping the trolley (not including the lifted load) at an average rate of deceleration not to exceed 4.7 ft./s/s when traveling in either direction at one-third of the rated load speed.

(i) When more than one trolley is operated on the same bridge, each shall be equipped with bumpers or equivalent on their adjacent ends.

(b) Bumpers or equivalent shall be designed and installed to minimize parts falling from the trolley in case of age.

(4) Rail sweeps. Bridge trucks shall be equipped with sweeps which extend below the top of the rail and project in front of the truck wheels.

(5) Guards for hoisting ropes.

(a) If hoisting ropes run near enough to other parts to make fouling or chafing possible, guards shall be installed to prevent this condition.

(b) A guard shall be provided to prevent contact between bridge conductors and hoisting ropes if they could come into contact.

(6) Guards for moving parts.

(a) Exposed moving parts such as gears, set screws, projecting keys, chains, chain sprockets, and reciprocating components which might constitute a hazard under normal operating conditions shall be guarded.

(b) Guards shall be securely fastened.

(c) Each guard shall be capable of supporting without permanent distortion the weight of a 200-pound person unless the guard is located where it is impossible for a person to step on it.

[Statutory Authority: RCW 49.17.040, 49.17.050, 49.17.240, chapters 43.22 and 42.30 RCW. 80-17-015 (Order 80-21), § 296-24-23509, filed 11/13/80; Order 74-27, § 296-24-23509, filed 5/7/74; Order 73-5, § 296-24-23509, filed 5/9/73 and Order 73-4, § 296-24-23509, filed 5/7/73.]

WAC 296-24-23511 Brakes. (1) Brakes for hoists.

(a) Each independent hoisting unit of a crane shall be equipped with at least one self-setting brake, hereafter referred to as a holding brake, applied directly to the motor shaft or some part of the gear train.

(b) Each independent hoisting unit of a crane, except worm-geared hoists, the angle of whose worm is such as to prevent the load from accelerating in the lowering direction shall, in addition to a holding brake, be equipped with control braking means to prevent overspeeding.

(2) Holding brakes.

(a) Holding brakes for hoist motors shall have not less than the following percentage of the full load hoisting torque at the point where the brake is applied.

(i) 125 percent when used with a control braking means other than mechanical.

(ii) 100 percent when used in conjunction with a mechanical control braking means.

(iii) 100 percent each if two holding brakes are provided.

(b) Holding brakes on hoists shall have ample thermal capacity for the frequency of operation required by the service.

(c) Holding brakes on hoists shall be applied automatically when power is removed.

(d) Where necessary holding brakes shall be provided with adjustment means to compensate for wear.

(e) The wearing surface of all holding-brake drums or discs shall be smooth.

(f) Each independent hoisting unit of a crane handling hot metal and having power control braking means shall be equipped with at least two holding brakes.

(3) Control braking means.

(a) A power control braking means such as regenerative, dynamic or countertorque braking, or a mechanically controlled braking means shall be capable of maintaining safe lowering speeds of rated loads.

(b) The control braking means shall have ample thermal capacity for the frequency of operation required by service.

(4) Brakes for trolleys and bridges.

(a) Foot operated brakes shall not require an applied force of more than 70 pounds to develop manufacturer's rated brake torque.

(b) Brakes may be applied by mechanical, electrical, pneumatic, hydraulic, or gravity means.

(c) Where necessary brakes shall be provided with adjustment means to compensate for wear.

(d) The wearing surface of all brake drums or discs shall be smooth.

(e) All foot-brake pedals shall be constructed so that the operator's foot will not easily slip off the pedal.

(f) Foot-operated brakes shall be equipped with automatic means for positive release when pressure is released from the pedal.

(g) Brakes for stopping the motion of the trolley or bridge shall be of sufficient size to stop the trolley or bridge within a distance in feet equal to 10 percent of full load speed in feet per minute when traveling at full speed with full load.

(h) If holding brakes are provided on the bridge or trolley(s), they shall not prohibit the use of a drift point in the control circuit.

(i) Brakes on trolleys and bridges shall have ample thermal capacity for the frequency of operation required by the service to prevent impairment of functions from overheating.

(5) Application of trolley brakes.

(a) On cab-operated cranes with cab on trolley, a trolley brake shall be required as specified under (4) of this section.

(b) A drag brake may be applied to hold the trolley in a desired position on the bridge and to eliminate creep with the power off.

(6) Application of bridge brakes.

(a) On cab-operated cranes with cab on bridge, a bridge brake is required as specified under (4) of this section.

(b) On cab-operated cranes with cab on trolley, a bridge brake of the holding type shall be required.

(c) On all floor, remote and pulpit-operated crane bridge drives, a brake or noncoasting mechanical drive shall be provided.

[Order 73-5, § 296-24-23511, filed 5/9/73 and Order 73-4, § 296-24-23511, filed 5/7/73.]

WAC 296-24-23513 Electric equipment. (1) General.

(a) Wiring and equipment shall comply with chapter 296-24 WAC Part L, and WAC 296-800-280.

(b) The control circuit voltage shall not exceed 600 volts for a.c. or d.c. current.

(c) The voltage at pendant pushbuttons shall not exceed 150 volts for a.c. and 300 volts for d.c.

(d) Where multiple conductor cable is used with a suspended pushbutton station, the station shall be supported in a manner that will protect the electrical conductors against strain.

(e) Pendant control boxes shall be constructed to prevent electrical shock and shall be clearly marked for identification of functions.

(2) Equipment.

(a) Electrical equipment shall be so located or enclosed that live parts will not be exposed to accidental contact under normal operating conditions.

(b) Electric equipment shall be protected from dirt, grease, oil, and moisture.

(c) Guards for live parts shall be substantial and so located that they cannot be accidentally deformed so as to make contact with the live parts.

(3) Controllers.

(a) Cranes not equipped with spring-return controllers or momentary contact pushbuttons shall be provided with a device which will disconnect all motors from the line on failure of power and will not permit any motor to be restarted until the controller handle is brought to the "off" position, or a reset switch or button is operated.

(b) Lever operated controllers shall be provided with a notch or latch which in the "off" position prevents the handle from being inadvertently moved to the "on" position. An "off" detent or spring return arrangement is acceptable.

(c) The controller operating handle shall be located within convenient reach of the operator.

(d) As far as practicable, the movement of each controller handle shall be in the same general directions as the resultant movements of the load.

(e) The control for the bridge and trolley travel shall be so located that the operator can readily face the direction of travel.

(f) For floor-operated cranes, the controller or controllers if rope operated, shall automatically return to the "off" position when released by the operator.

(g) Pushbuttons in pendant stations shall return to the off position when pressure is released by the crane operator.

(h) Automatic cranes shall be so designed that all motions shall fail-safe if any malfunction of operation occurs.

(i) Remote-operated cranes shall function so that if the control signal for any crane motion becomes ineffective the crane motion shall stop.

(4) Resistors.

(a) Enclosures for resistors shall have openings to provide adequate ventilation, and shall be installed to prevent the accumulation of combustible matter near hot parts.

(b) Resistor units shall be supported so as to be free as possible from vibration.

(c) Provision shall be made to prevent broken parts or molten metal falling upon the operator or from the crane.

(5) Switches.

(a) The power supply to the runway conductors shall be controlled by a switch or circuit breaker located on a fixed structure, accessible from the floor, and arranged to be locked in the open position.

(b) On cab-operated cranes a switch or circuit breaker of the enclosed type, with provision for locking in the open position shall be provided in the leads from the runway conductors. A means of opening this switch or circuit breaker shall be located within easy reach of the operator.

(c) On floor-operated cranes, a switch or circuit breaker of the enclosed type, with provision for locking in the open position, shall be provided in the leads from the runway conductors. This disconnect shall be mounted on the bridge or footwalk near the runway collectors. One of the following types of floor operated disconnects shall be provided:

(i) Nonconductive rope attached to the main disconnect switch.

(ii) An undervoltage trip for the main circuit breaker operated by an emergency stop button in the pendant pushbutton station.

(iii) A main line contactor operated by a switch or pushbutton in the pendant pushbutton station.

(d) The hoisting motion of all electric traveling cranes shall be provided with an overtravel limit switch in the hoisting direction.

(e) All cranes using a lifting magnet shall have a magnet circuit switch of the enclosed type with provision for locking in the open position. Means for discharging the inductive load of the magnet shall be provided.

(6) Runway conductors. Conductors of the open type mounted on the crane runway beams or overhead shall be so located or so guarded that persons entering or leaving the cab or crane footwalk normally could not come into contact with them.

(7) Extension lamps. If a service receptacle is provided in the cab or on the bridge of cab-operated cranes, it shall be a grounded three-prong type permanent receptacle, not exceeding 300 volts.

(8) Floor operated cranes.

(a) An unobstructed aisle not less than three feet wide shall be maintained for travel of the operator except in such cases where the control handles are hung from the trolleys of traveling cranes.

(b) The handles of control ropes shall be distinctly different in contour so that, without looking, the operator will know which is the hoisting and which is the lowering handle. The direction of all movements of the crane shall be clearly indicated in some manner so that the operator can easily become familiar with them.

(c) When repairing runways, repairpersons shall place rail stops and warning signs or signals so as to protect both ends of the section to be repaired.

(d) Repairpersons shall take care to prevent loose parts from falling or being thrown upon the floor beneath.

[Statutory Authority: RCW 49.17.010, [49.17].040, and [49.17].050. 01-11-038, § 296-24-23513, filed 5/9/01, effective 9/1/01. Statutory Authority: Chapter 49.17 RCW. 91-24-017 (Order 91-07), § 296-24-23513, filed 11/22/91, effective 12/24/91; Order 73-5, § 296-24-23513, filed 5/9/73 and Order 73-4, § 296-24-23513, filed 5/7/73.]

WAC 296-24-23515 Hoisting equipment. (1) Sheaves.

(a) Sheave grooves shall be smooth and free from surface defects which could cause rope damage.

(b) Sheaves carrying ropes which can be momentarily unloaded shall be provided with close-fitting guards or other suitable devices to guide the rope back into the groove when the load is applied again.

(c) The sheaves in the bottom block shall be equipped with close-fitting guards that will prevent ropes from becoming fouled when the block is laying on the ground with ropes loose.

(d) Pockets and flanges of sheaves used with hoist chains shall be of such dimensions that the chain does not catch or bind during operation.

(e) All running sheaves shall be equipped with means for lubrication. Permanently lubricated, sealed and/or shielded bearings meet this requirement.

(2) Ropes.

(a) In using hoisting ropes, the crane manufacturer's recommendation shall be followed. The rated load divided by the number of parts of rope shall not exceed 20 percent of the nominal breaking strength of the rope.

(b) Socketing shall be done in the manner specified by the manufacturer of the assembly.

(c) Rope shall be secured to the drum as follows:

(i) No less than two wraps of rope shall remain on the drum when the hook is in its extreme low position.

(ii) Rope end shall be anchored by a clamp securely attached to the drum, or by a socket arrangement approved by the crane or rope manufacturer.

(d) Rope clips attached with U-bolts shall have the U-bolts on the dead or short end of the rope. Spacing and number of all types of clips shall be in accordance with (2)(e) of this section. Clips shall be drop-forged steel in all sizes manufactured commercially. When a newly installed rope has been in operation for an hour, all nuts on the clip bolts shall be retightened.

(e)

Diameter of Rope	Number of Clips Required	Space Between Clips
1 1/2 inch	8	10 inches
1 3/8 inch	7	9 inches
1 1/4 inch	6	8 inches
1 1/8 inch	5	7 inches
1 inch	5	6 inches
7/8 inch	5	5 1/4 inches
3/4 inch	5	4 1/2 inches
3/8 to 5/8 inch	4	3 inches

(f) Swaged or compressed fittings shall be applied as recommended by the rope or crane manufacturer.

(g) Wherever exposed to temperatures, at which fiber cores would be damaged, rope having an independent wire-rope or wire-strand core, or other temperature-damage resistant core shall be used.

(h) Replacement rope shall be the same size, grade, and construction as the original rope furnished by the crane manufacturer, unless otherwise recommended by a wire rope manufacturer due to actual working condition requirements.

(3) Equalizers. If a load is supported by more than one part of rope, the tension in the parts shall be equalized.

(4) Hooks. Hooks shall meet the manufacturer's recommendations and shall not be overloaded. Safety latch-type hooks shall be used or the hook shall be moused.

[Statutory Authority: RCW 49.17.040, 49.17.050, 49.17.240, chapters 43.22 and 42.30 RCW. 80-17-015 (Order 80-21), § 296-24-23515, filed 11/13/80. Statutory Authority: RCW 49.17.040, 49.17.150, and 49.17.240. 79-08-115 (Order 79-9), § 296-24-23515, filed 7/31/79; Order 73-5, § 296-24-23515, filed 5/9/73 and Order 73-4, § 296-24-23515, filed 5/7/73.]

WAC 296-24-23517 Warning device. Except for floor operated cranes a gong or other effective warning signal shall be provided for each crane equipped with a powered traveling mechanism.

[Order 73-5, § 296-24-23517, filed 5/9/73 and Order 73-4, § 296-24-23517, filed 5/7/73.]

WAC 296-24-23519 Inspection. (1) Inspection classification.

(a) Initial inspection. Prior to initial use all new and altered cranes shall be inspected to insure compliance with the provisions of these standards.

(b) Inspection procedure for cranes in regular service is divided into two general classifications based upon the intervals at which inspection should be performed. The intervals in turn are dependent upon the nature of the critical components of the crane and the degree of their exposure to wear, deterioration, or malfunction. The two general classifications are herein designated as "frequent" and "periodic" with respective intervals between inspections as defined below:

(i) Frequent inspection - daily to monthly intervals.

(ii) Periodic inspection - 1 to 12 month intervals.

(2) Frequent inspection. The following items shall be inspected for defects at intervals as defined in (1)(b) of this section or as specifically indicated, including observation during operation for any defects which might appear between regular inspections. All deficiencies such as listed shall be

carefully examined and determination made as to whether they constitute a safety hazard:

(a) All functional operating mechanisms for maladjustment interfering with proper operation. Daily.

(b) Deterioration or leakage in lines, tanks, valves, drain pumps, and other parts of air or hydraulic systems. Daily.

(c) Hooks with deformation or cracks. Visual inspection daily; monthly inspection with signed reports. For hooks with cracks or having more than 15 percent in excess of normal throat opening or more than 10° twist from the plane of the unbent hook refer to WAC 296-24-23523 (3)(c)(i).

(d) Hoist or load attachment chains, including end connections, for excessive wear, twist, distorted links interfering with proper function, or stretch beyond manufacturer's recommendations. Visual inspection daily; monthly inspection with signed report.

(e) Rope slings, including end connections, for excessive wear, broken wires, stretch, kinking, or twisting. Visual inspection daily; monthly inspection with signed report.

(f) All functional operating mechanisms for excessive wear of components.

(g) Rope reeving for noncompliance with manufacturer's recommendations.

(3) Periodic inspection. Complete inspections of the crane shall be performed at intervals as generally defined in (l)(b)(ii) of this section, depending upon its activity, severity of service, and environment, or as specifically indicated below. These inspections shall include the requirements of (2) of this section and in addition, the following items. Any deficiencies such as listed shall be carefully examined and determination made as to whether they constitute a safety hazard:

(a) Deformed, cracked, or corroded members.

(b) Loose bolts or rivets.

(c) Cracked or worn sheaves and drums.

(d) Worn, cracked or distorted parts such as pins, bearings, shafts, gears, rollers, locking and clamping devices.

(e) Excessive wear on brake system parts, linings, pawls, and ratchets.

(f) Load, wind, and other indicators over their full range, for any significant inaccuracies.

(g) Gasoline, diesel, electric, or other powerplants for improper performance or noncompliance with applicable safety requirements.

(h) Excessive wear of chain drive sprockets and excessive chain stretch.

(i) Crane hooks. Magnetic particle or other suitable crack detecting inspection should be performed at least once each year.

(j) Electrical apparatus, for signs of pitting or any deterioration of controller contactors, limit switches and pushbutton stations.

(4) Cranes not in regular use.

(a) A crane which has been idle for a period of 1 month or more, but less than 6 months, shall be given an inspection conforming with requirements of (2) of this section and WAC 296-24-23525(2), before placing in service.

(b) A crane which has been idle for a period of over 6 months shall be given a complete inspection conforming with requirements of (2) and (3) of this section and WAC 296-24-23525(2) before placing in service.

(c) Standby cranes shall be inspected at least semi-annually in accordance with requirements of (2) of this section and WAC 296-24-23525(2). Standby cranes exposed to adverse environment should be inspected more frequently.

[Order 73-5, § 296-24-23519, filed 5/9/73 and Order 73-4, § 296-24-23519, filed 5/7/73.]

WAC 296-24-23521 Testing. (1) Operational tests.

(a) Prior to initial use all new and altered cranes shall be tested to insure compliance with this section including the following functions:

(i) Hoisting and lowering.

(ii) Trolley travel.

(iii) Bridge travel.

(iv) Limit switches, locking and safety devices.

(b) The trip setting of hoist limit switches shall be determined by tests with an empty hook traveling in increasing speeds up to the maximum speed. The actuating mechanism of the limit switch shall be located so that it will trip the switch, under all conditions, in sufficient time to prevent contact of the hook or hook block with any part of the trolley.

(2) Rated load test. Prior to initial use all new, extensively repaired, and altered cranes should be tested by or under the direction of an appointed or authorized person, confirming the load rating of the crane. The load rating should not be more than 80 percent of the maximum load sustained during the test. Test loads shall not be more than 125 percent of the rated load unless otherwise recommended by the manufacturer. The tests reports shall be placed on file where readily available to appointed personnel.

[Order 73-5, § 296-24-23521, filed 5/9/73 and Order 73-4, § 296-24-23521, filed 5/7/73.]

WAC 296-24-23523 Maintenance. (1) Preventive maintenance. A preventive maintenance program based on the crane manufacturer's recommendations shall be established.

(2) Maintenance procedure.

(a) Before adjustments and repairs are started on a crane the following precautions shall be taken:

(i) The crane to be repaired shall be run to a location where it will cause the least interference with other cranes and operations in the area.

(ii) All controllers shall be at the off position.

(iii) The main or emergency switch shall be open and locked in the open position.

(iv) Warning or "out of order" signs shall be placed on the crane, also on the floor beneath or on the hook where visible from the floor.

(v) Where other cranes are in operation on the same runway, rail stops or other suitable means shall be provided to prevent interference with the idle crane.

(vi) Where temporary protective rail stops are not available, or practical, a signalperson should be placed at a visual vantage point for observing the approach of an active crane and warning its operator when reaching the limit of safe distance from the idle crane.

(b) After adjustments and repairs have been made the crane shall not be operated until all guards have been reinstalled, safety devices reactivated and maintenance equipment removed.

(3) Adjustments and repairs.

(a) Any unsafe conditions disclosed by the inspection requirements of WAC 296-24-23519 shall be corrected before operation of the crane is resumed. Adjustments and repairs shall be done only by designated personnel.

(b) Adjustments shall be maintained to assure correct functioning of components. The following are examples:

(i) All functional operating mechanisms.

(ii) Limit switches.

(iii) Control systems.

(iv) Brakes.

(v) Power plants.

(c) Repairs or replacements shall be provided promptly as needed for safe operation. The following are examples:

(i) Accessory components, such as hooks, shall be carefully examined periodically and at the time of annual examination and inspection. Cracked or deformed hooks shall be discarded immediately and not reused on any equipment subject to the provisions of this code.

(ii) Load attachment chains and rope slings showing defects described in WAC 296-24-23519 (2)(d) and (e) respectively.

(iii) All critical parts which are cracked, broken, bent, or excessively worn.

(iv) Pendant control stations shall be kept clean and function labels kept legible.

[Statutory Authority: Chapter 49.17 RCW. 94-15-096 (Order 94-07), § 296-24-23523, filed 7/20/94, effective 9/20/94; Order 73-5, § 296-24-23523, filed 5/9/73 and Order 73-4, § 296-24-23523, filed 5/7/73.]

WAC 296-24-23525 Rope inspection. (1) Running ropes. A thorough inspection of all ropes shall be made at least once a month and a full written, dated, and signed report of rope condition kept on file where readily available to appointed personnel. Any deterioration, resulting in appreciable loss of original strength, such as described below, shall be carefully noted and determination made as to whether further use of the rope would constitute a safety hazard:

(a) Reduction of rope diameter below nominal diameter due to loss of core support, internal or external corrosion, or wear of outside wires.

(b) A number of broken outside wires and the degree of distribution or concentration of such broken wires.

(c) Worn outside wires.

(d) Corroded or broken wires at end connections.

(e) Corroded, cracked, bent, worn, or improperly applied end connections.

(f) Severe kinking, crushing, cutting, or unstranding.

(2) Other ropes. All rope which has been idle for a period of a month or more due to shutdown or storage of a crane on which it is installed shall be given a thorough inspection before it is placed in service. This inspection shall be for all types of deterioration and shall be performed by an appointed person whose approval shall be required for further use of the rope. A written and dated report of the rope condition shall be available for inspection.

[Statutory Authority: RCW 49.17.040, 49.17.050, 49.17.240, chapters 43.22 and 42.30 RCW. 80-17-015 (Order 80-21), § 296-24-23525, filed 11/13/80; Order 73-5, § 296-24-23525, filed 5/9/73 and Order 73-4, § 296-24-23525, filed 5/7/73.]

WAC 296-24-23527 Handling the load. (1) Size of load. The crane shall not be loaded beyond its rated load except for test purposes as provided in WAC 296-24-23521.

(2) Attaching the load.

(a) The hoist chain or hoist rope shall be free from kinks or twists and shall not be wrapped around the load.

(b) The load shall be attached to the load block hook by means of slings or other approved devices.

(c) Care shall be taken to make certain that the sling clears all obstacles.

(3) Moving the load.

(a) The load shall be well secured and properly balanced in the sling or lifting device before it is lifted more than a few inches.

(b) Before starting to hoist the following conditions shall be noted:

(i) Hoist rope shall not be kinked.

(ii) Multiple part lines shall not be twisted around each other.

(iii) The hook shall be brought over the load in such a manner as to prevent swinging.

(c) During hoisting care shall be taken that:

(i) There is no sudden acceleration or deceleration of the moving load.

(ii) The load does not contact any obstructions.

(d) Cranes shall not be used for side pulls except when specifically authorized by a responsible person who has determined that the stability of the crane is not thereby endangered and that various parts of the crane will not be overstressed.

(e) While any employee is on the load or hook, there shall be no hoisting, lowering, or traveling.

(f) The employer shall require that the operator avoid carrying loads over people.

(g) The operator shall test the brakes each time a load approaching the rated load is handled. The brakes shall be tested by raising the load a few inches and applying the brakes.

(h) The load shall not be lowered below the point where less than two full wraps of rope remain on the hoisting drum.

(i) When two or more cranes are used to lift a load one qualified responsible person shall be in charge of the operation. The qualified person shall analyze the operation and instruct all personnel involved in the proper positioning, rigging of the load, and the movements to be made.

(j) The employer shall assure that the operator does not leave the control position while the load is suspended.

(k) When starting the bridge and when the load or hook approaches near or over personnel, the warning signal shall be sounded.

(4) Hoist limit switch.

(a) At the beginning of each operator's shift, the upper limit switch of each hoist shall be tried out under no load. Extreme care shall be exercised; the block shall be "inched" into the limit or run in at slow speed. If the switch does not operate properly, the appointed person shall be immediately notified.

(b) The hoist limit switch which controls the upper limit of travel of the load block shall never be used as an operating control.

[Statutory Authority: Chapter 49.17 RCW. 94-15-096 (Order 94-07), § 296-24-23527, filed 7/20/94, effective 9/20/94; Order 73-5, § 296-24-23527, filed 5/9/73 and Order 73-4, § 296-24-23527, filed 5/7/73.]

WAC 296-24-23529 Operators. (1) Cranes shall be operated only by regular crane operators, authorized substitutes who have had adequate experience and training under the supervision of a competent operator, or by crane repairmen or inspectors.

(2) Crane operators must be able to communicate with others at the worksite sufficiently to understand the signs, notices, operation instructions, and the signal code in use to ensure safe operation of the crane.

(3) No minor under eighteen years of age shall be employed in occupations involving the operation of any power-driven hoisting apparatus or assisting in such operations by work such as hooking on, loading slings, rigging gear, etc.

(4) No person shall be permitted to operate a crane whose hearing or eye-sight is impaired, or who may be suffering from heart disease or similar ailments. The following physical qualifications shall be minimum requirements for overhead and gantry crane operators and trainees:

(a) They shall have vision of at least 20/30 in one eye, and 20/50 in the other, with or without corrective lenses.

(b) They shall be able to distinguish colors, regardless of position of colors, if color differential is required for operation.

(c) Their hearing, with or without hearing aid, must be adequate for a specific operation.

(d) They shall have sufficient strength, endurance, agility, coordination, and speed of reaction to meet the demands of equipment operation.

(e) They shall have normal depth perception, field of vision, reaction time, manual dexterity, coordination and no tendencies to dizziness or similar undesirable characteristics.

(f) Evidence of physical defects, or emotional instability which could render the operator or trainee a hazard to their self or others, or could interfere with their safe performance may be sufficient cause for disqualification. In such cases, specialized clinical or medical judgments or tests shall be required (which include annual medical certification for recovered heart attack patients).

(g) Evidence that an operator or trainee is subject to seizures or loss of physical control shall be sufficient reason for disqualification. Specialized medical tests shall be required to substantiate these conditions.

(5) Persons who have recovered from a heart attack shall be exempted from the provisions of subsection (4) of this section, as it pertains to their heart condition, provided:

(a) A medical release is obtained from their attending medical doctor.

(b) The release shall state that the operation of a crane will not present a hazard to their self or others.

(c) An examination by a medical doctor, and renewal of the work release certification is required annually.

(6) The operator shall be fully familiar with all crane rules and with the crane mechanism and its proper care. Needed adjustments or repairs shall be reported at once to the proper authority.

(7) The operator shall not eat, smoke or read while actually engaged in the operation of the crane, or operate the crane when physically unfit.

(8) The operator or someone especially designated shall properly lubricate all working parts of the crane.

(9) Cranes shall be kept clean.

(10) Whenever the operator finds the main or emergency switch open, it shall not be closed, even when starting on regular duty, until it is determined that no one is on or about the crane. The crane shall not be oiled or repaired unless the main switch is open.

(11) If the power goes off, the operator shall immediately throw all controllers to "off" position until the power is again available.

(12) Before closing the main switch the operator shall make sure that all controllers are in "off" position until the power is again available.

(13) The operator shall recognize signals only from the employee who is supervising the lift. Operating signals shall follow an established standard. Whistle signals may be used where one crane only is in operation.

(14) Bumping into runway stops or other cranes shall be avoided. When the operator is ordered to engage with or push other cranes, it shall be done with special care for the safety of persons on or below cranes.

(15) When lowering a load, the operator shall proceed carefully and make sure the load is under safe control.

(16) When leaving the cage the operator shall throw all controllers to "off" position and open the main switch.

(17) If the crane is located out-of-doors the operator shall lock the crane in a secure position to prevent it from being blown along or off the track by a severe wind.

(18) Operators shall not permit anyone to ride on the load or hooks, unless using a lifeline or safety device approved by the department.

[Statutory Authority: RCW 49.17.010, [49.17].040 and [49.17].050. 99-17-094, § 296-24-23529, filed 8/17/99, effective 12/1/99. Statutory Authority: Chapter 49.17 RCW. 94-15-096 (Order 94-07), § 296-24-23529, filed 7/20/94, effective 9/20/94. 89-11-035 (Order 89-03), § 296-24-23529, filed 5/15/89, effective 6/30/89; Order 73-5, § 296-24-23529, filed 5/9/73 and Order 73-4, § 296-24-23529, filed 5/7/73.]

WAC 296-24-23531 Other requirements—General. (1) Ladders.

(a) The employer shall insure that hands are free from encumbrances while personnel are using ladders.

(b) Articles which are too large to be carried in pockets or belts shall be lifted and lowered by hand line.

(2) Cabs.

(a) Necessary clothing and personal belongings shall be stored in such a manner as not to interfere with access or operation.

(b) Tools, oil cans, waste, extra fuses, and other necessary articles shall be stored in the tool box, and shall not be permitted to lie loose in or about the cab.

(3) Fire extinguishers. The employer shall insure that operators are familiar with the operation and care of fire extinguishers provided.

[Order 73-5, § 296-24-23531, filed 5/9/73 and Order 73-4, § 296-24-23531, filed 5/7/73.]

WAC 296-24-23533 Crane and derrick suspended personnel (work) platforms. (1) Scope and application. This standard applies to the design, construction, testing, use and maintenance of personnel platforms, and the hoisting of personnel platforms on the load lines of cranes or derricks.

(2) Definitions. For the purposes of this section, the following definitions apply:

(a) "Failure" means load refusal, breakage, or separation of components.

(b) "Hoist" (or hoisting) means all crane or derrick functions such as lowering, lifting, swinging, booming in and out or up and down, or suspending a personnel platform.

(c) "Load refusal" means the point where the ultimate strength is exceeded.

(d) "Maximum intended load" means the total load of all employees tools, materials, and other loads reasonably anticipated to be applied to a personnel platform or personnel platform component at any one time.

(e) "Runway" means a firm, level surface designed, prepared, and designated as a path of travel for the weight and configuration of the crane being used to lift and travel with the crane suspended platform. An existing surface may be used as long as it meets these criteria.

(3) General requirements. The use of a crane or derrick to hoist employees on a personnel platform is prohibited, except when the erection, use, and dismantling of conventional means of reaching the worksite, such as a personnel hoist, ladder, stairway, aerial lift, elevating work platform or scaffold, would be more hazardous, or is not possible because of structural design or worksite conditions.

(4) Operational criteria.

(a) Hoisting of the personnel platform shall be performed in a slow, controlled, cautious manner with no sudden movements of the crane or derrick, or the platform.

(b) Load lines shall be capable of supporting, without failure, at least seven times the maximum intended load, except that where rotation resistant rope is used, the lines shall be capable of supporting without failure, at least ten times the maximum intended load. The required design factor is achieved by taking the current safety factor of 3.5 and applying the fifty percent derating of the crane capacity.

(c) Load and boom hoist drum brakes, swing brakes, and locking devices such as pawls or dogs shall be engaged when the occupied personnel platform is in a stationary working position.

(d) Cranes and derricks with variable angle booms shall be equipped with a boom angle indicator, readily visible to the operator.

(e) Cranes with telescoping booms shall be equipped with a device to indicate clearly to the operator, at all times, the boom's extended length, or an accurate determination of the load radius to be used during the lift shall be made prior to hoisting personnel.

(f) A positive acting device shall be used which prevents contact between the load block or overhaul ball and the boom tip (anti-two-blocking device), or a system shall be used which deactivates the hoisting action before damage occurs in the event of a two-blocking situation (two block damage prevention feature).

(g) The load line hoist drum shall have a system or device on the power train, other than the load hoist brake, which regulates the lowering rate of speed of the hoist mechanism (controlled load lowering). Free fall is prohibited.

(h) The crane shall be uniformly level within one percent of level grade and located on firm footing. Cranes equipped with outriggers shall have them all fully deployed following manufacturer's specifications, insofar as applicable, when hoisting employees.

(i) The total weight of the loaded personnel platform and related rigging shall not exceed fifty percent of the rated capacity for the radius and configuration of the crane or derrick.

(j) The use of machines having live booms (booms in which lowering is controlled by a brake without aid from other devices which slow the lowering speeds) is prohibited.

(k) Multiple-part line block: When a multiple-part line block is in use, a substantial strap shall be used between the crane hook and common ring, shackle, or other equivalent device, to eliminate employee exposure to the lines running through the block, and to the block itself.

(5) Rigging.

(a) Lifting bridles on box-type platforms shall consist of four legs of equal length, with one end securely shackled to each corner of the platform and the other end securely attached to a common ring, shackle, or other equivalent device to accommodate the crane hook, or a strap to the crane hook.

(b) Shackle bolts used for rigging of personnel platforms shall be secured against displacement.

(c) A substantial safety line shall pass through the eye of each leg of the bridle adjacent to the common ring, shackle, or equivalent device and be securely fastened with a minimum amount of slack to the lift line above the headache ball or to the crane hook itself.

(d) All eyes in wire rope sling shall be fabricated with thimbles.

(e) Wire rope, shackles, rings, master links, and other rigging hardware must be capable of supporting, without failure, at least five times the maximum intended load applied or transmitted to that component. Where rotation resistant wire rope is used for slings, they shall be capable of supporting without failure at least ten times the maximum intended load.

(f) Hooks on headache ball assemblies, lower load blocks, or other attachment assemblies shall be of a type that can be closed and locked, eliminating the hook throat opening. Alternatively, an alloy anchor type shackle with a bolt, nut, and retaining pin shall be used.

(g) Bridles and associated rigging for attaching the personnel platform to the hoist line shall be used only for the platform and the necessary employees, their tools and the materials necessary to do their work, and shall not be used for any other purpose when not hoisting personnel.

(6) Personnel platforms - design criteria.

(a) The personnel platform and suspension system shall be designed by a qualified engineer or a qualified person competent in structural design.

(b) The suspension system shall be designed to minimize tipping of the platform due to movement of employees occupying the platform.

(c) The personnel platform itself, except the guardrail system and body belt/harness anchorages, shall be capable of supporting, without failure, its own weight and at least five

times the maximum intended load based on a minimum allowance of five hundred pounds for the first person with light tools, and an additional two hundred fifty pounds for each additional person.

(d) Criteria for guardrail systems and body belt/harness anchorages are contained in Parts J-1 and J-2 of this chapter.

(e) The personnel platform shall be conspicuously posted with a plate or other permanent marking which indicates the weight of the platform and its rated load capacity or maximum intended load.

(7) Platform specifications.

(a) Each personnel platform shall be equipped with a guardrail system which meets the requirements of WAC 296-24-75007, and shall be enclosed at least from the toeboard to mid-rail with either solid construction or expanded metal having openings no greater than one-half inch (1.27cm).

(b) A grab rail shall be installed inside the entire perimeter of the personnel platform.

(c) Access gates, if installed, shall not swing outward during hoisting.

(d) Access gates, including sliding or folding gates, shall be equipped with a restraining device to prevent accidental opening.

(e) Headroom shall be provided which allows employees to stand upright in the platform.

(f) In addition to the use of hard hats, employees shall be protected by overhead protection on the personnel platform when employees are exposed to falling objects.

(g) All rough edges exposed to contact by employees shall be surfaced or smoothed in order to prevent injury to employees from punctures or lacerations.

(h) All welding of the personnel platform and its components shall be performed by a qualified welder familiar with the weld grades, types, and material specified in the platform design.

(i) Occupants of all personnel platforms shall wear a safety belt or harness and lanyard which meets the requirements of ANSI A10.14-1975.

(j) Box-type platform: The workers lanyard shall be secured to the work platform or guardrail of the work platform.

(k) Rescue platform:

(i) If the platform is used as a rescue vehicle, the injured worker shall be strapped into the stretcher or basket.

(ii) The basket shall then be secured by lanyard to an anchorage within the platform.

(l) Boatswains chair: The workers lanyard shall be secured to the lift line above the headache ball or to the crane hook itself.

(m) Barrel-type platform:

(i) The workers lanyard shall be secured to the lift line above the headache ball or to the crane hook itself.

(ii) A solid bar or rod shall be substantially attached in a rigid position to the bottom or side of the platform.

(iii) The side bar or rod shall extend a minimum of eight feet above the floor of the work platform.

(iv) The bottom of the barrel-type platform shall be of a convex shape to cause the platform to lay on its side when lowered to the ground or floor.

(v) Workers shall enter and exit from barrel-type platforms only when they are in an upright position, stable, and securely attached to the load line.

(vi) The employer shall use methods or devices which allow employees to safely enter or exit barrel-type platforms.

(8) Personnel platform loading.

(a) The personnel platform shall not be loaded in excess of its rated load capacity.

(b) The number of employees occupying the personnel platform shall not exceed the number required for the work being performed.

(c) Personnel platforms shall be used only for employees, their tools, and the materials necessary to do their work, and shall not be used to hoist only materials or tools when not hoisting personnel.

(d) Materials and tools for use during a personnel lift shall be secured to prevent displacement.

(e) Materials and tools for use during a personnel lift shall be evenly distributed within the confines of the platform while the platform is suspended.

(9) Trial lift, inspection, and prooftesting.

(a) A trial lift with the unoccupied personnel platform loaded at least to the anticipated liftweight shall be made from ground level, or any other location where employees will enter the platform, to each location at which the personnel platform is to be hoisted and positioned. This trial lift shall be performed immediately prior to placing personnel on the platform. The operator shall determine that all systems, controls, and safety devices are activated and functioning properly; that no interferences exist; and that all configurations necessary to reach those work locations will allow the operator to remain under the fifty percent limit of the hoist's rated capacity. Materials and tools to be used during the actual lift can be loaded in the platform, as provided in subsection (8)(d) and (e) of this section for the trial lift. A single trial lift may be performed at one time for all locations that are to be reached from a single set-up position.

(b) The trial lift shall be repeated prior to hoisting employees whenever the crane or derrick is moved and set up in a new location or returned to a previously used location. Additionally, the trial lift shall be repeated when the lift route is changed unless the operator determines that the route change is not significant (i.e., the route change would not affect the safety of hoisted employees).

(c) After the trial lift, and just prior to hoisting personnel, the platform shall be hoisted a few inches and inspected to ensure that it is secure and properly balanced. Employees shall not be hoisted unless the following conditions are determined to exist:

(i) Hoist ropes shall be free of kinks;

(ii) Multiple part lines shall not be twisted around each other;

(iii) The primary attachment shall be centered over the platform; and

(iv) The hoisting system shall be inspected if the load rope is slack to ensure all ropes are properly stated on drums and in sheaves.

(d) A visual inspection of the crane or derrick, rigging, personnel platform, and the crane or derrick base support or ground shall be conducted by a competent person immediately after the trial lift to determine whether the testing has

exposed any defect or produced any adverse effect upon any component or structure.

(e) Any defects found during inspections which create a safety hazard shall be corrected before hoisting personnel.

(f) At each job site, prior to hoisting employees on the personnel platform, and after any repair or modification, the platform and rigging shall be prooftested to one hundred twenty-five percent of the platform's rated capacity by holding it in a suspended position for five minutes with the test load evenly distributed on the platform (this may be done concurrently with the trial lift). After prooftesting, a competent person shall inspect the platform and rigging. Any deficiencies found shall be corrected and another prooftest shall be conducted. Personnel hoisting shall not be conducted until the prooftesting requirements are satisfied.

(g) The employer shall retain at the jobsite and produce when requested, documentation such as lift capacity information, verifying that the requirements of this standard have been met.

(10) Work practices.

(a) Employees shall keep all parts of the body inside the platform during raising, lowering, and positioning. This provision does not apply to an occupant of the platform performing the duties of a signal person.

(b) Before employees exit or enter a hoisted personnel platform that is not landed, the platform shall be secured to the structure where the work is to be performed, unless securing to the structure creates an unsafe situation.

(c) Tag lines shall be used unless their use creates an unsafe condition.

(d) The crane or derrick operator shall remain at the controls at all times when the crane engine is running and the platform is occupied.

(e) Hoisting of employees shall be promptly discontinued upon indication of any dangerous weather conditions or other impending danger.

(f) Employees being hoisted shall remain in continuous sight of and in direct communication with the operator or signal person. In those situations where direct visual contact with the operator is not possible, and the use of a signal person would create a greater hazard for that person, direct communication alone such as by radio may be used.

(g) Hand signals to the operator shall be in accordance with those prescribed by the applicable ANSI standard for the type of crane or lift in use unless voice communication equipment is utilized. Signals shall be discernable or audible at all times.

(h) Except over water, employees occupying the personnel platform shall use a body belt/harness system with lanyard appropriately attached to the lower load block or overhaul ball, or to a structural member within the personnel platform capable of supporting a fall impact for employees using the anchorage.

(i) No lifts shall be made on another of the crane's or derrick's load lines while personnel are suspended on a platform.

(11) Traveling.

(a) Hoisting of employees while the crane is traveling is prohibited except for portal, tower and locomotive cranes, or where the employer demonstrates that there is no less hazardous way to perform the work.

(b) Under any circumstances where a crane would travel while hoisting personnel, the employer shall implement the following procedures to safeguard employees:

(i) Crane travel shall be restricted to a fixed track or runway;

(ii) Travel shall be limited to the load radius of the boom used during the lift; and

(iii) The boom must be parallel to the direction of travel.

(c) A complete trial run shall be performed to test the route of travel before employees are allowed to occupy the platform. This trial run can be performed at the same time as the trial lift required by subsection (9)(a) of this section which tests the route of the lift.

(d) If travel is done with a rubber tired-carrier, the condition and air pressure of the tires shall be checked. The chart capacity for lifts on rubber shall be used for application of the fifty percent reduction of rated capacity. Notwithstanding subsection (4)(i) of this section, outriggers may be partially retracted as necessary for travel.

(12) Prelift meeting.

(a) A meeting attended by the crane or derrick operator, signal person(s) (if necessary for the lift), employee(s) to be lifted, and the person responsible for the task to be performed shall be held to review the appropriate requirements of this section and the procedures to be followed.

(b) This meeting shall be held prior to the trial lift at each new location, and shall be repeated for any employees newly assigned to the operation.

[Statutory Authority: RCW 49.17.010, [49.17].040, and [49.17].050. 00-08-078, § 296-24-23533, filed 4/4/00, effective 7/1/00. Statutory Authority: Chapter 49.17 RCW. 96-09-030, § 296-24-23533, filed 4/10/96, effective 6/1/96; 91-03-044 (Order 90-18), § 296-24-23533, filed 1/10/91, effective 2/12/91.]

WAC 296-24-237 Construction, operation and maintenance—Chain and electric hoists. (1) Chain and electric hoists shall be of what is known as "all steel construction." No cast iron shall be used in parts subject to tension except drums, bearings or brake shoes.

(2) The chains shall be made of the best quality steel or iron with welded links.

(3) Chain and electric hoists shall have a factor of safety of at least five.

(4) Chain and electric hoists shall be equipped with an approved device which will automatically lock the load when hoisting is stopped.

(5) Electric hoists shall be provided with an approved limit stop to prevent the hoist block from traveling too far in case the operating handle is not released in time.

[Order 73-5, § 296-24-237, filed 5/9/73 and Order 73-4, § 296-24-237, filed 5/7/73.]

WAC 296-24-238 Air hoists. (1) To prevent piston rod lock nuts from becoming loose and allowing rod to drop when supporting a load, lock nut shall be secured to piston rod by a castellated nut and cotter-pin.

(2) A clevis or other means shall be used to prevent hoists cylinder becoming detached from hanger.

[Order 73-5, § 296-24-238, filed 5/9/73 and Order 73-4, § 296-24-238, filed 5/7/73.]

WAC 296-24-240 Crawler locomotive and truck cranes.

[Order 73-5, § 296-24-240, filed 5/9/73 and Order 73-4, § 296-24-240, filed 5/7/73.]

WAC 296-24-24001 Definitions. (1) A "crawler crane" consists of a rotating superstructure with power plant, operating machinery, and boom, mounted on a base, equipped with crawler treads for travel. Its function is to hoist and swing loads at various radii.

(2) A "locomotive crane" consists of a rotating superstructure with power plant, operating machinery and boom, mounted on a base or car equipped for travel on railroad track. It may be self-propelled or propelled by an outside source. Its function is to hoist and swing loads at various radii.

(3) A "truck crane" consists of a rotating superstructure with power plant, operating machinery and boom, mounted on an automotive truck equipped with a power plant for travel. Its function is to hoist and swing loads at various radii.

(4) A "wheel mounted crane" (wagon crane) consists of a rotating superstructure with power plant, operating machinery and boom, mounted on a base or platform equipped with axles and rubber-tired wheels for travel. The base is usually propelled by the engine in the superstructure, but it may be equipped with a separate engine controlled from the superstructure. Its function is to hoist and swing loads at various radii.

(5) An "accessory" is a secondary part or assembly of parts which contributes to the overall function and usefulness of a machine.

(6) "Appointed" means assigned specific responsibilities by the employer or the employer's representative.

(7) "ANSI" means the American National Standards Institute.

(8) An "angle indicator" (boom) is an accessory which measures the angle of the boom to the horizontal.

(9) The "axis of rotation" is the vertical axis around which the crane superstructure rotates.

(10) "Axle" means the shaft or spindle with which or about which a wheel rotates. On truck- and wheel-mounted cranes it refers to an automotive type of axle assembly including housings, gearing, differential, bearings, and mounting appurtenances.

(11) "Axle" (bogie) means two or more automotive-type axles mounted in tandem in a frame so as to divide the load between the axles and permit vertical oscillation of the wheels.

(12) The "base" (mounting) is the traveling base or carrier on which the rotating superstructure is mounted such as a car, truck, crawlers, or wheel platform.

(13) The "boom" (crane) is a member hinged to the front of the rotating superstructure with the outer end supported by ropes leading to a gantry or "A" frame and used for supporting the hoisting tackle.

(14) The "boom angle" is the angle between the longitudinal centerline of the boom and the horizontal. The boom longitudinal centerline is a straight line between the boom foot pin (heel pin) centerline and boom point sheave pin centerline.

(15) The "boom hoist" is a hoist drum and rope reeving system used to raise and lower the boom. The rope system may be all live reeving or a combination of live reeving and pendants.

(16) The "boom stop" is a device used to limit the angle of the boom at the highest position.

(17) A "brake" is a device used for retarding or stopping motion by friction or power means.

(18) A "cab" is housing which covers the rotating superstructure machinery and/or operator's station. On truck crane trucks a separate cab covers the driver's station.

(19) The "clutch" is a friction, electromagnetic, hydraulic, pneumatic, or positive mechanical device for engagement or disengagement of power.

(20) The "counterweight" is a weight used to supplement the weight of the machine in providing stability for lifting working loads.

(21) "Designated" means selected or assigned by the employer or the employer's representative as being qualified to perform specific duties.

(22) The "drum" is the cylindrical members around which ropes are wound for raising and lowering the load or boom.

(23) "Dynamic" (loading) means loads introduced into the machine or its components by forces in motion.

(24) The "gantry" (A-frame) is a structural frame, extending above the superstructure, to which the boom supports ropes are reeved.

(25) A "jib" is an extension attached to the boom point to provide added boom length for lifting specified loads. The jib may be in line with the boom or offset to various angles.

(26) "Load" (working) means the external load, in pounds, applied to the crane, including the weight of load-attaching equipment such as load blocks, shackles, and slings.

(27) "Load block" (upper) means the assembly of hook or shackle, swivel, sheaves, pins, and frame suspended from the boom point.

(28) "Load block" (lower) means the assembly of hook or shackle, swivel, sheaves, pins, and frame suspended by the hoisting ropes.

(29) A "load hoist" is a hoist drum and rope reeving system used for hoisting and lowering loads.

(30) "Load ratings" are crane ratings in pounds established by the manufacturer in accordance with WAC 296-24-24005.

(31) "Outriggers" are extendable or fixed metal arms, attached to the mounting base, which rest on supports at the outer ends.

(32) "Rail clamp" means a tong-like metal device, mounted on a locomotive crane car, which can be connected to the track.

(33) "Reeving" means a rope system in which the rope travels around drums and sheaves.

(34) "Rope" refers to a wire rope unless otherwise specified.

(35) "Side loading" means a load applied at an angle to the vertical plane of the boom.

(36) A "standby crane" is a crane which is not in regular service but which is used occasionally or intermittently as required.

(37) A "standing (guy) rope" is a supporting rope which maintains a constant distance between the points of attachment to the two components connected by the rope.

(38) "Structural competence" means the ability of the machine and its components to withstand the stresses imposed by applied loads.

(39) "Superstructure" means the rotating upper frame structure of the machine and the operating machinery mounted thereon.

(40) "Swing" means the rotation of the superstructure for movement of loads in a horizontal direction about the axis of rotation.

(41) "Swing mechanism" means the machinery involved in providing rotation of the superstructure.

(42) "Tackle" is an assembly of ropes and sheaves arranged for hoisting and pulling.

(43) "Transit" means the moving or transporting of a crane from one jobsite to another.

(44) "Travel" means the functions of the machine moving from one location to another, on a job site.

(45) The "travel mechanism" is the machinery involved in providing travel.

(46) "Wheelbase" means the distance between centers of front and rear axles. For a multiple axle assembly the axle center for wheelbase measurement is taken as the midpoint of the assembly.

(47) The "whipline" (auxiliary hoist) is a separate hoist rope system of lighter load capacity and higher speed than provided by the main hoist.

(48) A "winch head" is a power driven spool for handling of loads by means of friction between fiber or wire rope and spool.

[Order 73-5, § 296-24-24001, filed 5/9/73 and Order 73-4, § 296-24-24001, filed 5/7/73.]

WAC 296-24-24003 General requirements. (1) Application. This section applies to crawler cranes, locomotive cranes, wheel mounted cranes of both truck and self-propelled wheel type, and any variations thereof which retain the same fundamental characteristics. This section includes only cranes of the above types, which are basically powered by internal combustion engines or electric motors and which utilize drums and ropes. Cranes designed for railway and automobile wreck clearances are excepted. The requirements of these standards are applicable only to machines when used as lifting cranes.

(2) New and existing equipment. All new crawler, locomotive, and truck cranes constructed and utilized on or after the effective date of these standards, shall meet the design specifications of the American National Standard Safety Code for Crawler, Locomotive, and Truck Cranes, ANSI B 30.5-1968. Crawler, locomotive, and truck cranes constructed prior to the effective date of these standards should be modified to conform to those design specifications by December 31, 1973, unless it can be shown that the crane cannot feasibly or economically be altered and that the crane substantially complies with the requirements of this section. Replacement parts shall be of equal or better quality than the original equipment and suitable for the purpose. Repairs or modifications shall be such as to render the equipment equal to or better than the original construction or design.

(3) Designated personnel. Only designated personnel shall be permitted to operate a crane covered by this section.

[Order 74-27, § 296-24-24003, filed 5/7/74; Order 73-5, § 296-24-24003, filed 5/9/73 and Order 73-4, § 296-24-24003, filed 5/7/73.]

WAC 296-24-24005 Load ratings. (1) Load ratings—Where stability governs lifting performance.

(a) The margin of stability for determination of load ratings, with booms of stipulated lengths at stipulated working radii for the various types of crane mountings is established by taking a percentage of the loads which will produce a condition of tipping or balance with the boom in the least stable direction, relative to the mounting. The load ratings shall not exceed the following percentages for cranes, with the indicated types of mounting under conditions stipulated in (1)(b) and (c) of this section.

Type of crane mounting:	Maximum load ratings (percent of tipping loads)
Locomotive, without outriggers;	
Booms 60 feet or less	85
Booms over 60 feet	85[1]
Locomotive, using outriggers fully extended	80
Crawler, without outriggers	75
Crawler, using outriggers fully extended	85
Truck and wheel mounted without outriggers or using outriggers fully extended	85

[1] Unless this results in less than 30,000 pound-feet net stabilizing moment about the rail, which shall be minimum with such booms.

(b) The following stipulation shall govern the application of the values in (1)(a) of this section for locomotive cranes:

(i) Tipping with or without the use of outriggers occurs when half of the wheels farthest from the load leave the rail.

(ii) The crane shall be standing on track which is level within 1 percent grade.

(iii) Radius of the load is the horizontal distance from a projection of the axis of rotation to the rail support surface, before loading, to the center of vertical hoist line or tackle with load applied.

(iv) Tipping loads from which ratings are determined shall be applied under static conditions only, i.e., without dynamic effect of hoisting, lowering, or swinging.

(v) The weight of all auxiliary handling devices such as hoist blocks, hooks, and slings shall be considered a part of the load rating.

(c) Stipulations governing the application of the values in (1)(a) of this section for crawler, truck, and wheel-mounted cranes shall be in accordance with Crane Load-Stability Test Code. Society of Automotive Engineers (SAE) J765.

Note: The effectiveness of these preceding stability factors will be influenced by such additional factors as freely suspended loads, track, wind, or ground conditions, condition and inflation of rubber tires, boom lengths, proper operating speeds for existing conditions, and, in general, careful and competent operation. All of these shall be taken into account by the user.

(2) Rated capacity chart. A chart indicating the manufacturer's rated capacity at all operating radii for all permissible

boom lengths and jib lengths with alternate ratings for optional equipment affecting such ratings shall be posted in all mobile type cranes and shall be readily visible to the operator in the normal operating position.

(3) Inspection classification. Initial inspection. Prior to initial use all new and altered cranes shall be inspected to insure compliance with provisions of these standards.

(4) All hooks shall be of the safety latch-type or the hook shall be moused.

[Statutory Authority: Chapter 49.17 RCW. 94-15-096 (Order 94-07), § 296-24-24005, filed 7/20/94, effective 9/20/94. Statutory Authority: RCW 49.17.040, 49.17.150, and 49.17.240. 79-08-115 (Order 79-9), § 296-24-24005, filed 7/31/79; Order 73-5, § 296-24-24005, filed 5/9/73 and Order 73-4, § 296-24-24005, filed 5/7/73.]

WAC 296-24-24007 Inspection classification. (1) Regular inspection. Inspection procedure for cranes in regular service is divided into two general classifications based upon the intervals at which inspection should be performed. The intervals in turn are dependent upon the nature of the critical components of the crane and the degree of their exposure to wear, deterioration, or malfunction. The two general classifications are herein designated as "frequent" and "periodic" with respective intervals between inspections as defined below:

(a) Frequent inspection: Daily to monthly intervals.

(b) Periodic inspection: One- to 12-month intervals, or as specifically recommended by the manufacturer.

(2) Frequent inspection. Items such as the following shall be inspected for defects at intervals as defined in (2)(a) of this section or as specifically indicated including observation during operation for any defects which might appear between regular inspection. Any deficiencies such as listed shall be carefully examined and determination made as to whether they constitute a safety hazard:

(a) All control mechanisms for maladjustment interfering with proper operation: Daily.

(b) All control mechanisms for excessive wear of components and contamination by lubricants or other foreign matter.

(c) All safety devices for malfunction.

(d) Deterioration or leakage in air or hydraulic systems: Daily.

(e) Crane hooks with deformations or cracks. For hooks with cracks or having more than 15 percent in excess of normal throat opening or more than 10° twist from the plane of the unbent hook.

(f) Rope reeving for noncompliance with manufacturer's recommendations.

(g) Electrical apparatus for malfunctioning, signs of excessive deterioration, dirt, and moisture accumulation.

(3) Periodic inspection. Complete inspections of the crane shall be performed at intervals as generally defined in (2)(b) of this section depending upon its activity, severity of service, and environment, or as specifically indicated below. These inspections shall include the requirements of (3) of this section and in addition, items such as the following. Any deficiencies such as listed shall be carefully examined and determination made as to whether they constitute a safety hazard:

(a) Deformed, cracked, or corroded members, in the crane structure and boom.

(b) Loose bolts or rivets.

(c) Cracked or worn sheaves and drums.

(d) Worn, cracked, or distorted parts such as pins, bearings, shafts, gears, rollers and locking devices.

(e) Excessive wear on brake and clutch system parts, linings, pawls, and ratchets.

(f) Load, boom angle, and other indicators over their full range, for any significant inaccuracies.

(g) Gasoline, diesel, electric, or other power plants for improper performance or noncompliance with safety requirements.

(h) Excessive wear of chain-drive sprockets and excessive chain stretch.

(i) Travel steering, braking, and locking devices, for malfunction.

(j) Excessively worn or damaged tires.

(4) Cranes not in regular use.

(a) A crane which has been idle for a period of one month or more, but less than 6 months, shall be given an inspection conforming with requirements of (3) of this section and WAC 296-24-24013 (2)(b) before placing in service.

(b) A crane which has been idle for a period of six months shall be given a complete inspection conforming with requirements of (3) and (4) of this section and WAC 296-24-24013 (2)(b) before placing in service.

(c) Standby cranes shall be inspected at least semi-annually in accordance with requirements of (3) of this section and WAC 296-24-24013 (2)(b). Such cranes which are exposed to adverse environment should be inspected more frequently.

(5) Inspection records. Written, dated, and signed inspection reports and records shall be made monthly on critical items in use such as brakes, crane hooks, and ropes. Records shall be kept readily available.

[Order 73-5, § 296-24-24007, filed 5/9/73 and Order 73-4, § 296-24-24007, filed 5/7/73.]

WAC 296-24-24009 Testing. (1) Operational tests.

(a) In addition to prototype tests and quality-control measures, the user of each new production crane shall require that it be tested and related data supplied by the manufacturer to the extent necessary to assure compliance with the operational requirements of this subsection including functions such as the following:

(i) Load hoisting and lowering mechanisms

(ii) Boom hoisting and lower mechanisms

(iii) Swinging mechanism

(iv) Travel mechanism

(v) Safety devices

(b) Where the complete production crane is not supplied by one manufacturer such tests shall be conducted at final assembly.

(c) Certified production-crane test results shall be made available.

(2) Rated load test.

(a) Written reports shall be available showing test procedures and confirming the adequacy of repairs or alterations.

(b) Test loads shall not exceed 110 percent of the rated load at any selected working radius.

(c) Where rerating is necessary:

(i) Crawler, truck, and wheel-mounted cranes shall be tested in accordance with SAE Recommended Practice, Crane Load Stability Test Code J765 (April 1961).

(ii) Locomotive cranes shall be tested in accordance with WAC 296-24-24005 (1)(a) and (b).

(iii) Rerating test report shall be readily available.

(d) No cranes shall be rerated in excess of the original load ratings unless such rating changes are approved by the crane manufacturer or final assembler.

[Statutory Authority: Chapter 49.17 RCW. 94-15-096 (Order 94-07), § 296-24-24009, filed 7/20/94, effective 9/20/94; Order 73-5, § 296-24-24009, filed 5/9/73 and Order 73-4, § 296-24-24009, filed 5/7/73.]

WAC 296-24-24011 Maintenance procedure. (1) Any unsafe conditions disclosed by the inspection requirements of this section shall be corrected before operation of the crane is resumed. Adjustments and repairs shall be done only by designated personnel.

(2) After adjustments and repairs have been made the crane shall not be operated until all guards have been reinstalled, safety devices reactivated, and maintenance equipment removed.

[Order 73-5, § 296-24-24011, filed 5/9/73 and Order 73-4, § 296-24-24011, filed 5/7/73.]

WAC 296-24-24013 Rope inspection. (1) Running ropes. A thorough inspection of all ropes in use shall be made at least once a month and a full written, dated, and signed report of rope condition kept on file where readily available. All inspections shall be performed by an appointed or authorized person. Any deterioration, resulting in appreciable loss of original strength, such as described below, shall be carefully noted and determination made as to whether further use of the rope would constitute a safety hazard:

(a) Reduction of rope diameter below nominal diameter due to loss of core support, internal, or external corrosion or wear of outside wires.

(b) A number of broken outside wires and the degree of distribution of concentration of such broken wires.

(c) Worn outside wires.

(d) Corroded or broken wires at end connections.

(e) Corroded, cracked, bent, worn, or improperly applied end connections.

(f) Severe kinking, crushing, cutting, or unstranding.

(2) Other ropes.

(a) Heavy wear and/or broken wires may occur in sections in contact with equalizer sheaves or other sheaves where rope travel is limited, or with saddles. Particular care shall be taken to inspect ropes at these locations.

(b) All rope which has been idle for a period of a month or more due to shut down or storage of a crane on which it is installed shall be given a thorough inspection before it is placed in service. This inspection shall be for all types of deterioration and shall be performed by an appointed or authorized person whose approval shall be required for further use of the rope. A written and dated report of the rope condition shall be available.

(c) Particular care shall be taken in the inspection of nonrotating rope.

[Order 73-5, § 296-24-24013, filed 5/9/73 and Order 73-4, § 296-24-24013, filed 5/7/73.]

WAC 296-24-24015 Handling the load. (1) Size of load.

(a) No crane shall be loaded beyond the rated load, except for test purposes as provided in WAC 296-24-24009.

(b) When loads which are limited by structural competence rather than by stability are to be handled, it shall be ascertained that the weight of the load has been determined within plus or minus 10 percent before it is lifted.

(2) Attaching the load.

(a) The hoist rope shall not be wrapped around the load.

(b) The load shall be attached to the hook by means of slings or other approved devices.

(3) Moving the load.

(a) The employer shall assure that:

(i) The crane is level and where necessary blocked properly.

(ii) The load is well secured and properly balanced in the sling or lifting device before it is lifted more than a few inches.

(b) Before starting to hoist, the following conditions shall be noted:

(i) Hoist rope shall not be kinked.

(ii) Multiple part lines shall not be twisted around each other.

(iii) The hook shall be brought over the load in such a manner as to prevent swinging.

(iv) If there is a slack rope condition, it should be determined that the rope is properly seated on the drum and in the sheaves.

(c) During hoisting care shall be taken that:

(i) There is no sudden acceleration or deceleration of the moving load.

(ii) The load does not contact any obstructions.

(d) Side loading of booms shall be limited to freely suspended loads. Cranes shall not be used for dragging loads sideways.

(e) No hoisting, lowering, swinging, or traveling shall be done while anyone is on the load or hook.

(f) The operator should avoid carrying loads over people.

(g) On truck mounted cranes, no loads shall be lifted over the front area except as approved by the crane manufacturer.

(h) The operator shall test the brakes each time a load approaching the rated load is handled by raising it a few inches and applying the brakes.

(i) Outriggers shall be used when the load to be handled at that particular radius exceeds the rated load without outriggers as given by the manufacturer for that crane. Where floats are used they shall be securely attached to the outriggers. Wood blocks used to support outriggers shall:

(i) Be strong enough to prevent crushing.

(ii) Be free from defects.

(iii) Be of sufficient width and length to prevent shifting or toppling under load.

(j) Neither the load nor the boom shall be lowered below the point where less than two full wraps of rope remain on their respective drums.

(k) Before lifting loads with locomotive cranes without using outriggers, means shall be applied to prevent the load from being carried by the truck springs.

(l) When two or more cranes are used to lift one load, one designated person shall be responsible for the operation. They shall be required to analyze the operation and instruct all personnel involved in the proper positioning, rigging of the load, and the movements to be made.

(m) In transit the following additional precautions shall be exercised.

(i) The boom shall be carried in line with the direction of motion.

(ii) The superstructure shall be secured against rotation, except when negotiating turns when there is an operator in the cab or the boom is supported on a dolly.

(iii) The empty hook shall be lashed or otherwise restrained so that it cannot swing freely.

(n) Before traveling a crane with load, a designated person shall be responsible for determining and controlling safety. Decisions such as position of load, boom location, ground support, travel route, and speed of movement shall be in accord with their determinations.

(o) A crane with or without load shall not be traveled with the boom so high that it may bounce back over the cab.

(p) When rotating the crane, sudden starts and stops shall be avoided. Rotational speed shall be such that the load does not swing out beyond the radii at which it can be controlled. A tag or restraint line shall be used when rotation of the load is hazardous.

(q) When a crane is to be operated at a fixed radius, the boom-hoist pawl or other positive locking device shall be engaged.

(r) Ropes shall not be handled on a winch head without the knowledge of the operator.

(s) While a winch head is being used, the operator shall be within convenient reach of the power unit control lever.

(4) Holding the load.

(a) The operator shall not be permitted to leave the control position while the load is suspended.

(b) No person should be permitted to stand or pass under a load on the hook.

(c) If the load must remain suspended for any considerable length of time, the operator shall hold the drum from rotating in the lowering direction by activating the positive controllable means of the operator's station.

[Statutory Authority: Chapter 49.17 RCW. 94-15-096 (Order 94-07), § 296-24-24015, filed 7/20/94, effective 9/20/94; Order 73-5, § 296-24-24015, filed 5/9/73 and Order 73-4, § 296-24-24015, filed 5/7/73.]

WAC 296-24-24017 Other requirements. (1) Rail clamps. Rail clamps shall not be used as a means of restraining tipping of a locomotive crane.

(2) Ballast or counterweight. Cranes shall not be operated without the full amount of any ballast or counterweight in place as specified by the maker, but truck cranes that have dropped the ballast or counterweight may be operated temporarily with special care and only for light loads without full ballast or counterweight in place. The ballast or counterweight in place specified by the manufacturer shall not be exceeded.

(3) Cabs.

(a) Necessary clothing and personal belongings shall be stored in such a manner as to not interfere with access or operation.

(b) Tools, oil cans, waste, extra fuses, and other necessary articles shall be stored in the tool box, and shall not be permitted to lie loose in or about the cab.

(4) Refueling.

(a) Refueling with small portable containers shall be done with an approved safety type can equipped with an automatic closing cap and flame arrester. Refer to WAC 296-24-58501(19) for definition of approved.

(b) Machines shall not be refueled with the engine running.

(5) Fire extinguishers.

(a) A carbon dioxide, dry chemical, or equivalent fire extinguisher shall be kept in the cab or vicinity of the crane.

(b) Operating and maintenance personnel shall be made familiar with the use and care of the fire extinguishers provided.

(6) Swinging locomotive cranes. A locomotive crane shall not be swung into a position where railway cars on an adjacent track might strike it, until it has been ascertained that cars are not being moved on the adjacent track and proper flag protection has been established.

[Statutory Authority: Chapter 49.17 RCW. 88-23-054 (Order 88-25), § 296-24-24017, filed 11/14/88; Order 73-5, § 296-24-24017, filed 5/9/73 and Order 73-4, § 296-24-24017, filed 5/7/73.]

WAC 296-24-24019 Operating near overhead electric power lines. (1) For operations near overhead electric lines see chapter 296-24 WAC Part L.

(2) Boom guards. Cage-type boom guards, insulating links, or proximity warning devices may be used on cranes, but the use of such devices shall not operate to alter the requirements of (1) of this section.

(3) Notification. Before the commencement of operations near electrical lines, the owners of the lines or their authorized representative shall be notified and provided with all pertinent information. The cooperation of the owner shall be requested.

(4) Overhead wires. Any overhead wire shall be considered to be an energized line unless and until the person owning such line or the electrical utility authorities indicate that it is not an energized line.

[Statutory Authority: Chapter 49.17 RCW. 91-24-017 (Order 91-07), § 296-24-24019, filed 11/22/91, effective 12/24/91; Order 73-5, § 296-24-24019, filed 5/9/73 and Order 73-4, § 296-24-24019, filed 5/7/73.]

WAC 296-24-245 Derricks.

[Order 73-5, § 296-24-245, filed 5/9/73 and Order 73-4, § 296-24-245, filed 5/7/73.]

WAC 296-24-24501 Definitions. (1) A "derrick" is an apparatus consisting of a mast or equivalent member held at the head by guys or braces, with or without a boom, for use with a hoisting mechanism and operating ropes.

(2) "A-frame derrick" means a derrick in which the boom is hinged from a cross member between the bottom ends of two upright members spread apart at the lower ends and joined at the top; the boom point secured to the junction

of the side members, and the side members are braced or guyed from this junction point.

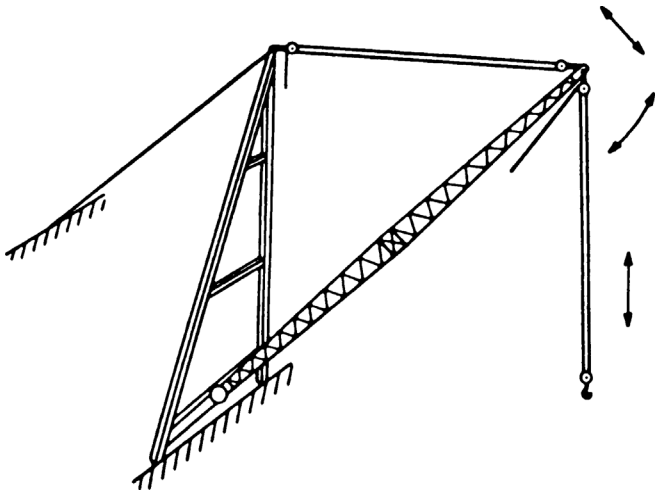

A-FRAME

(3) A "basket derrick" is a derrick without a boom, similar to a gin pole with its base supported by ropes attached to corner posts or other parts of the structure. The base is at a lower elevation than its supports. The location of the base of a basket derrick can be changed by varying the length of the rope supports. The top of the pole is secured with multiple reeved guys to position the top of the pole to the desired location by varying the length of the upper guy lines. The load is raised and lowered by ropes through a sheave or block secured to the top of the pole.

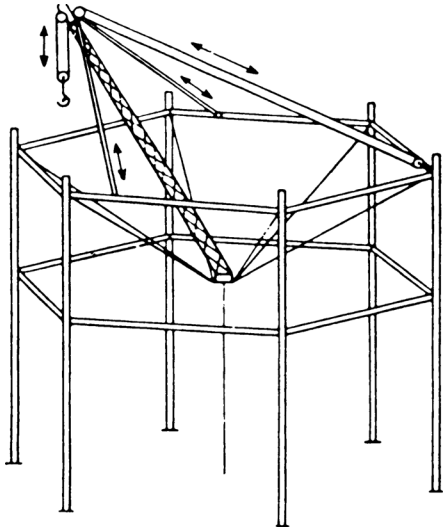

BASKET

(4) "Breast derrick" means a derrick without boom. The mast consists of two side members spread farther apart at the base than at the top and tied together at top and bottom by rigid members. The mast is prevented from tipping forward by guys connected to its top. The load is raised and lowered by ropes through a sheave or block secured to the top crosspiece.

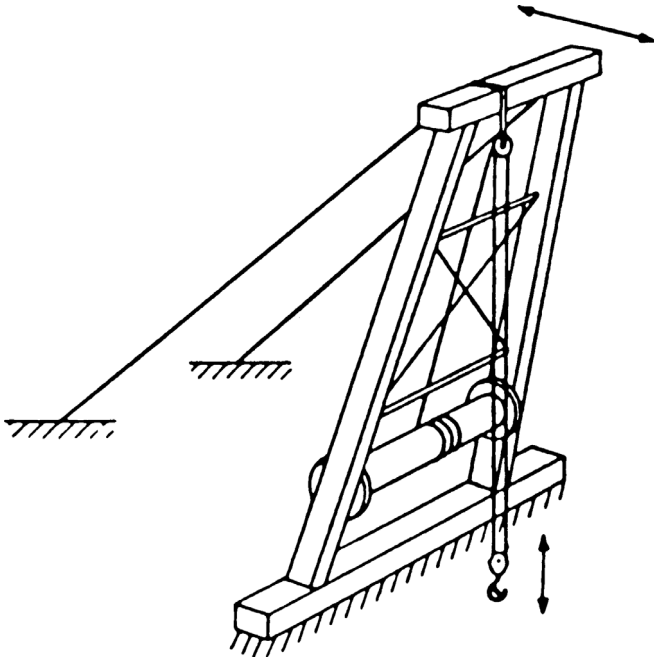

BREAST

(5) "Chicago boom derrick" means a boom which is attached to a structure, and outside upright member of the structure serving as the mast, and the boom being stepped in a fixed socket clamped to the upright. The derrick is complete with load, boom, and boom point swing line falls.

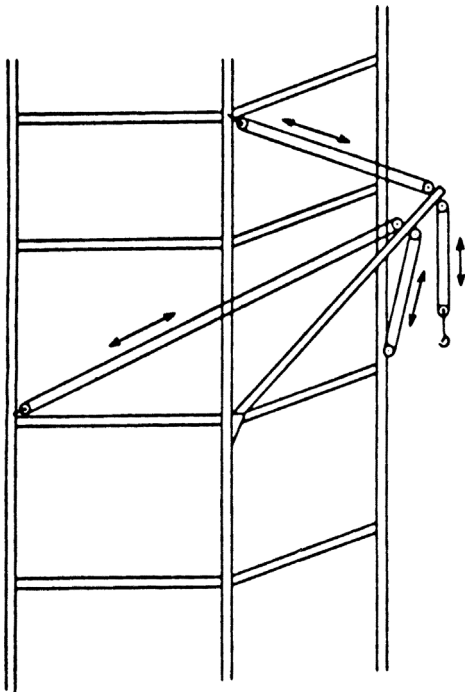

CHICAGO BOOM

(6) A "gin pole derrick" is a derrick without a boom. Its guys are so arranged from its top as to permit leaning the mast in any direction. The load is raised and lowered by ropes reeved through sheaves or blocks at the top of the mast.

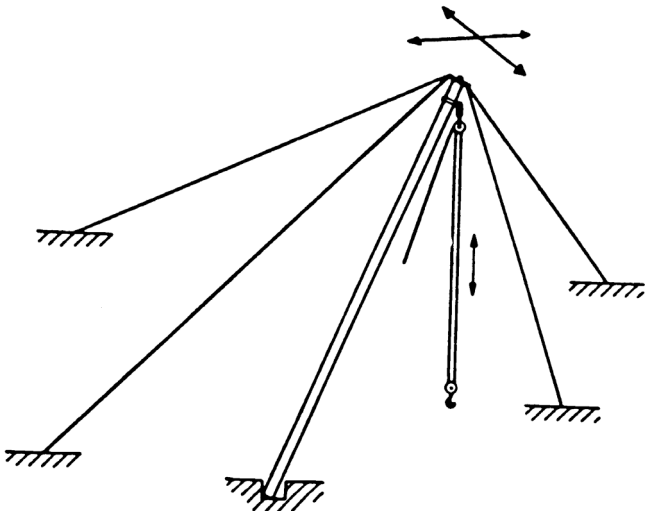

GIN POLE

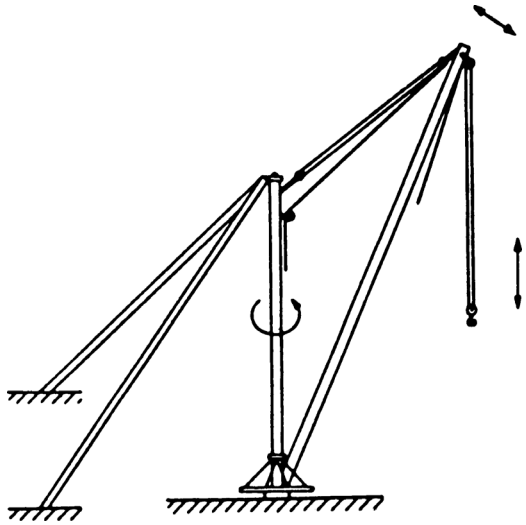

STIFF LEG

(7) "Guy derrick" means a fixed derrick consisting of a mast capable of being rotated, supported in a vertical position by guys, and a boom whose bottom end is hinged or pivoted to move in a vertical plane with a reeved rope between the head of the mast and the boom point for raising and lowering the boom, and a reeved rope from the boom point for raising and lowering the load.

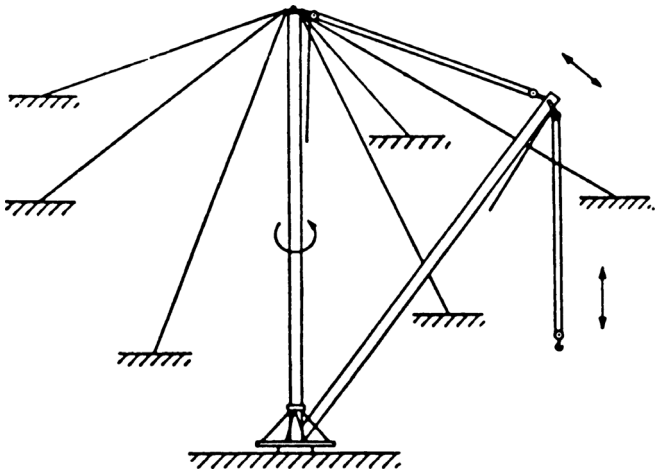

GUY

(8) "Shearleg derrick" means a derrick without a boom and similar to a breast derrick. The mast, wide at the bottom and narrow at the top, is hinged at the bottom and has its top secured by a multiple reeved guy to permit handling loads at various radii by means of load tackle suspended from the mast top.

(9) A "stiffleg derrick" is a derrick similar to a guy derrick except that the mast is supported or held in place by two or more stiff members, called stifflegs, which are capable of resisting either tensile or compressive forces. Sills are generally provided to connect the lower ends of the stifflegs to the foot of the mast.

(10) "Appointed" means assigned specific responsibilities by the employer or the employer's representative.

(11) "ANSI" means the American National Standards Institute.

(12) A boom is a timber or metal section or strut, pivoted or hinged at the heel (lower end) at a location fixed in height on a frame or mast or vertical member, and with its point (upper end) supported by chains, ropes, or rods to the upper end of the frame mast, or vertical member. A rope for raising and lowering the load is reeved through sheaves or a block at the boom point. The length of the boom shall be taken as the straight line distance between the axis of the foot pin and the axis of the boom point sheave pin, or where used, the axis of the upper load block attachment pin.

(13) "Boom harness" means the block and sheave arrangement on the boom point to which the topping lift cable is reeved for lowering and raising the boom.

(14) The "boom point" is the outward end of the top section of the boom.

(15) "Derrick bullwheel" means a horizontal ring or wheel, fastened to the foot of a derrick, for the purpose of turning the derrick by means of ropes leading from this wheel to a powered drum.

(16) "Designated" means selected or assigned by the employer or employer's representative as being qualified to perform specific duties.

(17) "Eye" means a loop formed at the end of a rope by securing the dead end to the live end at the base of the loop.

(18) A "fiddle block" is a block consisting of two sheaves in the same plane held in place by the same cheek plates.

(19) The "foot bearing" or "foot block" (sill block) is the lower support on which the mast rotates.

(20) A "gudgeon pin" is a pin connecting the mast cap to the mast allowing rotation of the mast.

(21) A "guy" is a rope used to steady or secure the mast or other member in the desired position.

(22) "Load, working" means the external load, in pounds, applied to the derrick, including the weight of load

attaching equipment such as load blocks, shackles, and slings.

(23) "Load block, lower" means the assembly of sheaves, pins, and frame suspended by the hoisting rope.

(24) "Load block, upper" means the assembly of sheaves, pins, and frame suspended from the boom.

(25) "Mast" means the upright member of the derrick.

(26) "Mast cap (spider)" means the fitting at the top of the mast to which the guys are connected.

(27) "Reeving" means a rope system in which the rope travels around drums and sheaves.

(28) "Rope" refers to wire rope unless otherwise specified.

(29) "Safety hook" means a hook with a latch to prevent slings or load from accidentally slipping off the hook.

(30) "Side loading" is a load applied at an angle to the vertical plane of the boom.

(31) The "sill" is a member connecting the foot block and stiffleg or a member connecting the lower ends of a double member mast.

(32) A "standby derrick" is a derrick not in regular service which is used occasionally or intermittently as required.

(33) "Stiff leg" means a rigid member supporting the mast at the head.

(34) "Swing" means rotation of the mast and/or boom for movements of loads in a horizontal direction about the axis of rotation.

[Order 73-5, § 296-24-24501, filed 5/9/73 and Order 73-4, § 296-24-24501, filed 5/7/73.]

WAC 296-24-24503 General requirements. (1) Application. This section applies to guy, stiffleg, basket, breast, gin pole, Chicago boom and A-frame derricks of the stationary type, capable of handling loads at variable reaches and powered by hoists through systems of rope reeving, used to perform lifting hook work, single or multiple line bucket work, grab, grapple, and magnet work. Derricks may be permanently installed for temporary use as in construction work. The requirements of this section also apply to any modification of these types which retain their fundamental features, except for floating derricks.

(2) New and existing equipment. All new derricks constructed and installed on or after the effective date of these standards shall meet the design specifications of the "American National Standards Institute, Safety Code for Derricks, ANSI B30.6-1969." Derricks constructed prior to the effective date of these standards should be modified to conform to these design specifications by December 31, 1973 unless it can be shown that the derrick cannot feasibly or economically be altered and that the derrick substantially complies with the requirements of this section.

(a) Operating controls shall be marked or an explanation of the controls shall be posted in full view of the operator.

(b) Cranes or derricks having a movable working boom shall have a radius or boom angle indicator installed. This shall be located where the operator can readily read it from the normal operating position.

(c) Top of boom painted. The top six feet of the boom or jib shall be painted bright yellow.

(3) Designated personnel. Only designated personnel shall be permitted to operate a derrick covered by this section.

[Statutory Authority: Chapter 49.17 RCW. 94-15-096 (Order 94-07), § 296-24-24503, filed 7/20/94, effective 9/20/94; Order 76-6, § 296-24-24503, filed 3/1/76; Order 73-5, § 296-24-24503, filed 5/9/73 and Order 73-4, § 296-24-24503, filed 5/7/73.]

WAC 296-24-24505 Load ratings. (1) Rated load marking. For permanently installed derricks with fixed lengths of boom, guy, and mast, a substantial, durable, and clearly legible rating chart shall be provided with each derrick and securely affixed where it is visible to personnel responsible for the safe operation of the equipment. The chart shall include the following data:

(a) Manufacturer's approved load ratings at corresponding ranges of boom angle or operating radii.

(b) Specific lengths of components on which the load ratings are based.

(c) Required parts for hoist reeving. Size and construction of rope may be shown either on the rating chart or in the operating manual.

(2) Nonpermanent installations. For nonpermanent installations, the employer shall provide sufficient information from which capacity charts can be prepared for the particular installation. The capacity charts shall be located at the derricks or the jobsite office.

[Order 73-5, § 296-24-24505, filed 5/9/73 and Order 73-4, § 296-24-24505, filed 5/7/73.]

WAC 296-24-24507 Inspection. (1) Inspection classification.

(a) Prior to initial use all new and altered derricks shall be inspected to insure compliance with the provisions of these standards.

(b) Inspection procedure for derricks in regular service is divided into two general classifications based upon the intervals at which inspection should be performed. The intervals in turn are dependent upon the nature of the critical components of the derrick and the degree of their exposure to wear, deterioration, or malfunction. The two general classifications are herein designated as frequent and periodic with respective intervals between inspections as defined below:

(i) Frequent inspection - daily to monthly intervals.

(ii) Periodic inspection - 1- to 12-month intervals, or as specified by the manufacturer.

(2) Frequent inspection. Items such as the following shall be inspected for defects at intervals as defined in (1)(b)(i) of this section or as specifically indicated, including observation during operation for any defects which might appear between regular inspections. Deficiencies shall be carefully examined for any safety hazard.

(a) All control mechanisms: Inspect daily for adjustment, wear, and lubrication.

(b) All chords and lacing: Inspect daily, visually.

(c) Tension in guys: Daily.

(d) Plumb of the mast.

(e) Deterioration or leakage in air or hydraulic systems: Daily.

(f) Derrick hooks for deformations or cracks; for hooks with cracks or having more than 15 percent in excess of nor-

mal throat opening or more than 10° twist from the plane of the unbent hook, refer to WAC 296-24-24511 (3)(c).

(g) Rope reeving; visual inspection for noncompliance with derrick manufacturer's recommendations.

(h) Hoist brakes, clutches, and operating levers: Check daily for proper functioning before beginning operations.

(i) Electrical apparatus for malfunctioning, signs of excessive deterioration, dirt, and moisture accumulation.

(3) Periodic inspection.

(a) Complete inspections of the derrick shall be performed at intervals as generally defined in (1)(b)(ii) of this section depending upon its activity, severity of service, and environment, or as specifically indicated below. These inspections shall include the requirements of (2) of this section and in addition, items such as the following. Deficiencies shall be carefully examined and a determination made as to whether they constitute a safety hazard:

(i) Structural members for deformations, cracks, and corrosion.

(ii) Bolts or rivets for tightness.

(iii) Parts such as pins, bearings, shafts, gears, sheaves, drums, rollers, locking and clamping devices, for wear, cracks, and distortion.

(iv) Gudgeon pin for cracks, wear, and distortion each time the derrick is to be erected.

(v) Power plants for proper performance and compliance with applicable safety requirements.

(vi) Hooks: Magnetic particle or other suitable crack detecting inspection should be performed at least once each year.

(b) Foundation or supports shall be inspected for continued ability to sustain the imposed loads.

(4) Derricks not in regular use.

(a) A derrick which has been idle for a period of 1 month or more, but less than 6 months, shall be given an inspection conforming with requirements of (2) of this section and WAC 296-24-24513(2) before placing in service.

(b) A derrick which has been idle for a period of over 6 months shall be given a complete inspection conforming with requirements of (2) and (3) of this section and WAC 296-24-24513(3) before placing in service.

(c) Standby derricks shall be inspected at least semiannually in accordance with requirements of (2) of this section and WAC 296-24-24513(3). Those exposed to adverse environment should be inspected more frequently.

[Order 73-5, § 296-24-24507, filed 5/9/73 and Order 73-4, § 296-24-24507, filed 5/7/73.]

WAC 296-24-24509 Testing. (1) Operational tests. Prior to initial use all new and altered derricks shall be tested to ensure compliance with this section including the following functions:

(a) Load hoisting and lowering.

(b) Boom up and down.

(c) Swing.

(d) Operation of clutches and brakes of hoist.

(2) Anchorages. All anchorages shall be approved by the appointed person. Rock and hairpin anchorages may require special testing.

[Order 73-5, § 296-24-24509, filed 5/9/73 and Order 73-4, § 296-24-24509, filed 5/7/73.]

WAC 296-24-24511 Maintenance. (1) Preventive maintenance. A preventive maintenance program based on the derrick manufacturer's recommendations shall be established.

(2) Maintenance procedure.

(a) Before adjustments and repairs are started on a derrick the following precautions shall be taken:

(i) The derrick to be repaired shall be arranged so it will cause the least interference with other equipment and operations in the area.

(ii) All hoist drum dogs shall be engaged.

(iii) The main or emergency switch shall be locked in the open position, if an electric hoist is used.

(iv) Warning or out of order signs shall be placed on the derrick and hoist.

(v) The repairs of booms or derricks shall either be made when the booms are lowered and adequately supported or safely tied off.

(vi) A good communication system shall be set up between the hoist operator and the appointed individual in charge of the derrick operations before any work on the equipment is started.

(vii) Welding repairs shall be approved by an appointed person.

(b) After adjustments and repairs have been made the derrick shall not be operated until all guards have been reinstalled, safety devices reactivated, and maintenance equipment removed.

(3) Adjustments and repairs.

(a) Any unsafe conditions disclosed by inspection shall be corrected before operation of the derrick is resumed.

(b) Adjustments shall be maintained to assure correct functioning of components.

(c) Repairs or replacements shall be provided promptly as needed for safe operation. The following are examples of conditions requiring prompt repair or replacement:

(i) Hooks showing defects described in WAC 296-24-24507 (2)(f) shall be discarded.

(ii) All critical parts which are cracked, broken, bent, or excessively worn.

(iii) Pitted or burned electrical contacts should be corrected only by replacement and in sets. Controller parts should be lubricated as recommended by the manufacturer.

(iv) All replacement and repaired parts shall have at least the original safety factor.

[Order 73-5, § 296-24-24511, filed 5/9/73 and Order 73-4, § 296-24-24511, filed 5/7/73.]

WAC 296-24-24513 Rope inspection. (1) Running ropes. A thorough inspection of all ropes in use shall be made at least once a month and a full written, dated, and signed report of rope condition kept on file where readily available. Any deterioration, resulting in appreciable loss of original strength, such as described below, shall be carefully noted and determination made as to whether further use of the rope would constitute a safety hazard:

(a) Reduction of rope diameter below nominal diameter due to loss of core support, internal or external corrosion, or wear of outside wires.

(b) A number of broken outside wires and the degree of distribution or concentration of such broken wires.

(c) Worn outside wires.

(d) Corroded or broken wires at end connections.

(e) Corroded, cracked, bent, worn, or improperly applied end connections.

(f) Severe kinking, crushing, cutting, or unstranding.

(2) Idle ropes. All rope which has been idle for a period of a month or more due to shutdown or storage of derrick on which it is installed shall be given a thorough inspection before it is placed in service. This inspection shall be for all types of deterioration. A written and dated report of the rope condition shall be available.

(3) Nonrotating ropes. Particular care shall be taken in the inspection of nonrotating rope.

Note: Limited travel ropes. Heavy wear and/or broken wires may occur in sections in contact with equalizer sheaves or other sheaves where rope travel is limited, or with saddles. Particular care shall be taken to inspect ropes at these locations.

[Order 73-5, § 296-24-24513, filed 5/9/73 and Order 73-4, § 296-24-24513, filed 5/7/73.]

WAC 296-24-24515 Operations of derricks. Derrick operation shall be directed only by the individual specifically designated for that purpose.

[Order 73-5, § 296-24-24515, filed 5/9/73 and Order 73-4, § 296-24-24515, filed 5/7/73.]

WAC 296-24-24517 Handling the load. (1) Size of load.

(a) No derrick shall be loaded beyond the rated load.

(b) When loads approach the maximum rating of the derrick, it shall be ascertained that the weight of the load has been determined within plus or minus 10 percent before it is lifted.

(2) Attaching the load.

(a) The hoist rope shall not be wrapped around the load.

(b) The load shall be attached to the hook by means of slings or other suitable devices.

(3) Moving the load.

(a) The load shall be well secured and properly balanced in the sling or lifting device before it is lifted more than a few inches.

(b) Before starting to hoist, the following conditions shall be noted:

(i) Hoist rope shall not be kinked.

(ii) Multiple part lines shall not be twisted around each other.

(iii) The hook shall be brought over the load in such a manner as to prevent swinging.

(iv) If there is a slack rope condition, it should be determined that the rope is properly seated on the drum and in the sheaves.

(c) During hoisting, care shall be taken that:

(i) There is no sudden acceleration or deceleration of the moving load.

(ii) Load does not contact any obstructions.

(d) A derrick shall not be used for side loading except when specifically authorized by a responsible person who has determined that the various structural components will not be overstressed.

(e) No hoisting, lowering, or swinging shall be done while anyone is on the load or hook.

(f) The operator shall avoid carrying loads over people.

(g) The operator shall test the brakes each time a load approaching the rated load is handled by raising it a few inches and applying the brakes.

(h) Neither the load nor boom shall be lowered below the point where less than two full wraps of rope remain on their respective drums.

(i) When rotating a derrick, sudden starts and stops shall be avoided. Rotational speed shall be such that the load does not swing out beyond the radius at which it can be controlled.

(j) Boom and hoisting rope systems shall not be twisted.

(4) Holding the load.

(a) The operator shall not be allowed to leave the control position while the load is suspended.

(b) People should not be permitted to stand or pass under a load on the hook.

(c) If the load must remain suspended for any considerable length of time, a dog, or pawl and ratchet, or other equivalent means, rather than the brake alone, shall be used to hold the load.

(5) Use of winch heads.

(a) Ropes shall not be handled on a winch head without the knowledge of the operator.

(b) While a winch head is being used, the operator shall be within convenient reach of the power unit control lever.

(6) Securing boom. Dogs, pawls, or other positive holding mechanism on the hoist shall be engaged. When not in use, the derrick boom shall:

(a) Be laid down;

(b) Be secured to a stationary member, as nearly under the head as possible, by attachment of a sling to the load block; or

(c) Be hoisted to a vertical position and secured to the mast.

[Statutory Authority: Chapter 49.17 RCW. 94-15-096 (Order 94-07), § 296-24-24517, filed 7/20/94, effective 9/20/94; Order 73-5, § 296-24-24517, filed 5/9/73 and Order 73-4, § 296-24-24517, filed 5/7/73.]

WAC 296-24-24519 Other requirements. (1) Guards.

(a) Exposed moving parts, such as gears, ropes, setscrews, projecting keys, chains, chain sprockets, and reciprocating components, which constitute a hazard under normal operating conditions shall be guarded.

(b) Guards shall be securely fastened.

(c) Each guard shall be capable of supporting without permanent distortion, the weight of a two hundred-pound person unless the guard is located where it is impossible for a person to step on it.

(2) Hooks.

(a) Hooks shall meet the manufacturer's recommendations and shall not be overloaded.

(b) Safety latch type hooks shall be used or the hooks shall be moused.

(3) Fire extinguishers.

(a) A carbon dioxide, dry chemical, or equivalent fire extinguisher shall be kept in the immediate vicinity of the derrick.

(b) Operating and maintenance personnel shall be familiar with the use and care of the fire extinguishers proved.

(4) Refueling.

(a) Refueling with portable containers shall be done with approved safety type containers equipped with automatic closing spout and flame arrester. Refer to WAC 296-24-58501(19) for definition of approved.

(b) Machines shall not be refueled with the engine running.

(5) Operating near electric powerlines. For operations near overhead electric lines see chapter 296-24 WAC Part L.

(6) Cab or operating enclosure.

(a) Necessary clothing and personnel belongings shall be stored in such a manner as to not interfere with access or operation.

(b) Tools, oilcans, waste, extra fuses, and other necessary articles shall be stored in the toolbox, and shall not be permitted to lie loose in or about the cab or operating enclosure.

[Statutory Authority: Chapter 49.17 RCW. 91-24-017 (Order 91-07), § 296-24-24519, filed 11/22/91, effective 12/24/91; 88-23-054 (Order 88-25), § 296-24-24519, filed 11/14/88. Statutory Authority: RCW 49.17.040, 49.17.150, and 49.17.240. 79-08-115 (Order 79-9), § 296-24-24519, filed 7/31/79; Order 73-5, § 296-24-24519, filed 5/9/73 and Order 73-4, § 296-24-24519, filed 5/7/73.]

WAC 296-24-293 "A" frames. (1) All timbers for "A" frames shall be of correct size, length, and condition to sustain the maximum contemplated loads.

(2) "A" frame timbers shall be braced with two spreaders spaced one-quarter the length of the "A" frame from each end. Cross bracing shall cross between the two spreaders. Bracing material shall be not less than two-thirds of the rated strength of the "A" frame timbers.

(3) Tie rods (staybolts) of not less than one-twelfth the diameter of the main "A" frame timbers shall be used. Tie rods shall be placed directly above the upper spreader and directly below the lower spreader. Ends of bolts shall be secured at each end with malleable washers and nuts.

(4) The base of the "A" frame shall be securely anchored. Elevating type "A" frames shall be set in pinion-type sockets. Pinion bases shall be securely anchored.

(5) Guy lines shall be of sufficient strength to carry the load imposed upon them and shall be securely fastened in place.

[Order 73-5, § 296-24-293, filed 5/9/73 and Order 73-4, § 296-24-293, filed 5/7/73.]

WAC 296-24-294 Rigging.

[Order 73-5, § 296-24-294, filed 5/9/73 and Order 73-4, § 296-24-294, filed 5/7/73.]

WAC 296-24-29401 Wire rope. (1) Safe loads. Whenever used in connection with work, employment, occupations or uses to which these standards are applicable, wire rope shall not be subjected to loads in excess of one-fifth the breaking load as given in the schedule of the cable manufacturer. Except as required in standard for material hoists.

(2) Condemned. When cables deteriorate through rust, wear, broken wires, undue strain or other conditions to the extent of fifteen percent of their original strength, use of cables shall be discontinued.

(3) Straps and ribbons. The strap or steel ribbon type of cable shall not be used in the suspension of scaffolding.

(4) Inspections. There shall be not less than monthly inspection of all wire rope in use, and all wire rope must be inspected before put into use.

(5) Fastening. The following methods of fastening and attaching wire rope shall be adhered to:

(a) Sockets. The end of wire rope to be set into socket fittings held securely with molten babbitt or zinc (not lead). The wires of the cable shall be frayed out and each wire bent toward the outside of socket, so that the end of each wire projects well into the depth of the socket. This method of fastening cables should be left in the hands of an experienced workers in this kind of work.

(b) Wrapping. Thimbles spliced into rope and the splice securely wrapped.

(c) Bolted. Thimbles inserted and held in place by at least a three bolt clamp or three U-bolt clips. Clamps shall be of standard size for the sizes of the cable in use.

(d) Lashing. For temporary work, by-passing rope at least twice around large object such as a post, avoiding sharp points and carrying the end back several feet and securing it by clamps, clips or lashing to the cable.

[Statutory Authority: Chapter 49.17 RCW. 94-15-096 (Order 94-07), § 296-24-29401, filed 7/20/94, effective 9/20/94; Order 76-29, § 296-24-29401, filed 9/30/76; Order 73-5, § 296-24-29401, filed 5/9/73 and Order 73-4, § 296-24-29401, filed 5/7/73.]

WAC 296-24-29403 Hemp rope. (1) Quality. Whenever hemp rope is used it shall be first grade long fiber Manila hemp rope.

(2) Strength. Rope shall not be used to support loads in excess of those given in table for hemp and Manila rope.

(3) Lashed. Supporting ropes shall be double lashed at each point of suspension.

(4) Pads. Where supporting ropes are brought over sharp corners of steel, stone, or other material liable to cut the rope, or are in any other way subject to abrasion, they shall be protected at such points by the use of bagging, wooden blocks or other protective padding.

(5) Knot ends. Rope knots shall have their loose and free ends lashed to the standing part in order to prevent their becoming untied.

(6) Inspection. All ropes shall be inspected before used.

(7) Defective rope. Rope badly frayed, rotted, exposed to the action of acid or caustic, or otherwise defective and unsafe, shall be condemned and destroyed to avoid all possibility of future use by mistake.

[Order 73-5, § 296-24-29403, filed 5/9/73 and Order 73-4, § 296-24-29403, filed 5/7/73.]

WAC 296-24-29405 Hemp and wire rope slings. (1) Inspection. All rope slings shall be inspected thoroughly and regularly at intervals of not more than one month, and when not in use, shall be stored in a dry place.

(2) Pads. Rope slings shall be protected with pads or blocks when wrapped around sharp edges of structural shapes, casting, etc.

(3) Slip-noose. Slings shall not be used in single strand slip-noose form.

(4) Acids. Hemp rope shall not be used as slings for handling objects contaminated with acid.

(5) How attached. Hand-ropes (guide-ropes) shall not be attached to slings but to hoisting tackle, or (only when necessary) attached to the object handled.

(6) Strength. All slings shall be of sufficient strength for handling the imposed loads. See tables given for hemp and wire ropes.

(7) Double slings. Double slings shall be used on all horizontal loads over twelve feet in length, and the distance between the points where slings are attached shall be sufficient to prevent the load from tipping up endwise.

(8) Spreaders. Spreaders shall be used where there is a danger of sling ends or "hitches" slipping together.

(9) Defective—Destroyed. Defective and unsafe slings shall be destroyed in order to avoid possibility of their being used by mistake.

[Order 73-5, § 296-24-29405, filed 5/9/73 and Order 73-4, § 296-24-29405, filed 5/7/73.]

WAC 296-24-29407 Guys. Guy wires and ropes shall be of sufficient strength to carry the load imposed upon them and shall be securely fastened in place.

[Order 73-5, § 296-24-29407, filed 5/9/73 and Order 73-4, § 296-24-29407, filed 5/7/73.]

WAC 296-24-29409 Thimbles. Wherever rope is permanently fastened by a single wrap to a metal object less in diameter or shortest measurement than three times the diameter of the rope, a galvanized thimble (of size intended for the rope) shall be inserted between the object and the loop of the rope.

[Order 73-5, § 296-24-29409, filed 5/9/73 and Order 73-4, § 296-24-29409, filed 5/7/73.]

WAC 296-24-29411 Blocks and falls. Blocks and falls shall be carefully inspected before being used. Blocks shall be of substantial construction and maintained in good condition while in use. Blocks shall fit the sizes of ropes they carry and shall not chafe or abrade the ropes running through them.

[Order 73-5, § 296-24-29411, filed 5/9/73 and Order 73-4, § 296-24-29411, filed 5/7/73.]

WAC 296-24-29413 Chains and cables. (1) If at any time any three foot length of chain is found to have stretched one-third the length of a link it shall be discarded.

(2) The practice of placing bolts or nails between two links to shorten chains is prohibited.

(3) Splicing broken chains by inserting a bolt between two links with the heads of the bolt and the nut sustaining the load, or passing one link through another and inserting a bolt or nail to hold it, is prohibited.

(4) Wherever annealing of chains is attempted, it shall be done in properly equipped annealing furnaces and under the direct supervision of a competent person thoroughly versed in heat treating.

(5) Cables shall be periodically inspected. A copy of the report of the inspections of each running cable shall be filed in a place readily accessible to the department, or authorized representative.

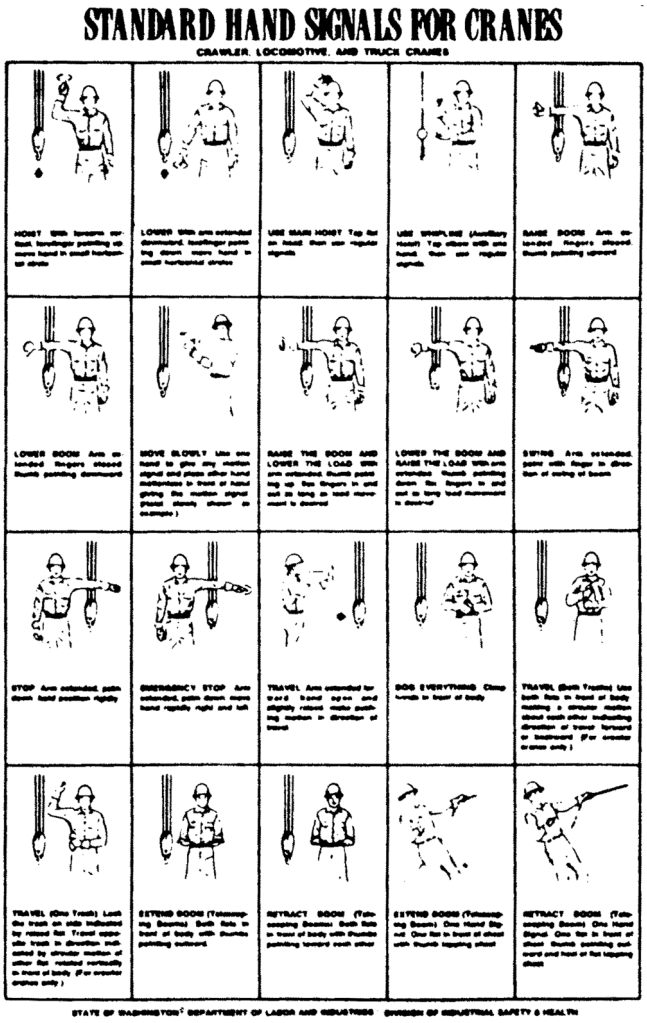

CRANE SIGNALS

1. Do not remove the load or the crane unless you understand the floor signal clearly.
2. Be careful that the load does not swing to injure your hook-on man/woman or other floorpersons; make certain they are in the clear.
3. When raising or lowering the load, see that it will safely clear adjacent stockpiles or machinery.
4. Never pick up a load greater than the capacity of your crane. In case of doubt, call your foreperson.
5. Never do ANYTHING that is not safe.
6. Co-operate with your hook-on or floorperson. You and he/she are a team handling a valuable piece of equipment—Never let it become a hazard.

[Statutory Authority: RCW 49.17.040, 49.17.050, 49.17.240, chapters 43.22 and 42.30 RCW. 80-17-015 (Order 80-21), § 296-24-29413, filed 11/13/80; Order 73-5, § 296-24-29413, filed 5/9/73 and Order 73-4, § 296-24-29413, filed 5/7/73.]

WAC 296-24-29415 Slings. This section applies to slings used in conjunction with other material handling equipment for the movement of material by hoisting, in employments covered by this chapter. The types of slings covered are those made from alloy steel chain, wire rope, metal mesh, natural or synthetic fiber rope (conventional three strand construction), and synthetic web (nylon, polyester, and polypropylene).

[Order 76-6, § 296-24-29415, filed 3/1/76.]

WAC 296-24-29417 Definitions. (1) Angle of loading. Means the inclination of a leg or branch of a sling measured from the horizontal or vertical plane as shown in Fig. D-5: Provided, That an angle of loading of five degrees or less from the vertical may be considered a vertical angle of loading.

(2) Basket hitch. Means a sling configuration whereby the sling is passed under the load and has both ends, end attachments, eyes or handles on the hook or a single master link.

(3) Braided wire rope. Means a wire rope formed by plaiting component wire ropes.

(4) Bridle wire rope sling. Means a sling composed of multiple wire rope legs with the top ends gathered in a fitting that goes over the lifting hook.

(5) Cable laid endless sling-mechanical joint. Means a wire rope sling made endless by joining the ends of a single length of cable laid rope with one or more metallic fittings.

(6) Cable laid grommet-hand tucked. Means an endless wire rope sling made from one length of rope wrapped six times around a core formed by hand tucking the ends of the rope inside the six wraps.

(7) Cable laid rope. Means a wire rope composed of six wire ropes wrapped around a fiber or wire rope core.

(8) Cable laid rope sling-mechanical joint. Means a wire rope sling made from a cable laid rope with eyes fabricated by pressing or swagging one or more metal sleeves over the rope junction.

(9) Choker hitch. Means a sling configuration with one end of the sling passing under the load and through an end attachment, handle or eye on the other end of the sling.

(10) Coating. Means an elastomer or other suitable material applied to a sling or to a sling component to impart desirable properties.

(11) Cross rod. Means a wire used to join spirals of metal mesh to form a complete fabric. (See Fig. D-2.)

(12) Designated. Means selected or assigned by the employer or the employer's representative as being qualified to perform specific duties.

(13) Equivalent entity. Means a person or organization (including an employer) which, by possession of equipment, technical knowledge and skills, can perform with equal competence the same repairs and tests as the person or organization with which it is equated.

(14) Fabric (metal mesh). Means the flexible portion of a metal mesh sling consisting of a series of transverse coils and cross rods.

(15) Female handle (choker). Means a handle with a handle eye and a slot of such dimension as to permit passage of a male handle thereby allowing the use of a metal mesh sling in a choker hitch. (See Fig. D-1.)

(16) Handle. Means a terminal fitting to which metal mesh fabric is attached. (See Fig. D-1.)

(17) Handle eye. Means an opening in a handle of a metal mesh sling shaped to accept a hook, shackle or other lifting device. (See Fig. D-1.)

(18) Hitch. Means a sling configuration whereby the sling is fastened to an object or load, either directly to it or around it.

(19) Link. Means a single ring of a chain.

(20) Male handle (triangle). Means a handle with a handle eye.

(21) Master coupling link. Means an alloy steel welded coupling link used as an intermediate link to join alloy steel chain to master links. (See Fig. D-3.)

(22) Master link or gathering ring. Means a forged or welded steel link used to support all members (legs) of an alloy steel chain sling or wire rope sling. (See Fig. D-3.)

(23) Mechanical coupling link. Means a nonwelded, mechanically closed steel link used to attach master links, hooks, etc., to alloy steel chain.

(24) Proof load. Means the load applied in performance of a proof test.

(25) Proof test. Means a nondestructive tension test performed by the sling manufacturer or an equivalent entity to verify construction and workmanship of a sling.

(26) Rated capacity or working load limit. Means the maximum working load permitted by the provisions of this section.

(27) Reach. Means the effective length of an alloy steel chain sling measured from the top bearing surface of the upper terminal component to the bottom bearing surface of the lower terminal component.

(28) Selvage edge. Means the finished edge of synthetic webbing designed to prevent unraveling.

(29) Sling. Means an assembly which connects the load to the material handling equipment.

(30) Sling manufacturer. Means a person or organization that assembles sling components into their final form for sale to users.

(31) Spiral. Means a single transverse coil that is the basic element from which metal mesh is fabricated. (See Fig. D-2.)

(32) Strand laid endless sling-mechanical joint. Means a wire rope sling made endless from one length of rope with the ends joined by one or more metallic fittings.

(33) Strand laid grommet-hand tucked. Means an endless wire rope sling made from one length of strand wrapped six times around a core formed by hand tucking the ends of the strand inside the six wraps.

(34) Strand laid rope. Means a wire rope made with strands (usually six or eight) wrapped around a fiber core, wire strand core, or independent wire rope core (IWRC).

(35) Vertical hitch. Means a method of supporting a load by a single, vertical part or leg of the sling. (See Fig. D-4.)

[Order 76-6, § 296-24-29417, filed 3/1/76.]

WAC 296-24-29419 Safe operating practices. Whenever any sling is used, the following practices shall be observed:

(1) Slings that are damaged or defective shall not be used.

(2) Slings shall not be shortened with knots or bolts or other makeshift devices.

(3) Sling legs shall not be kinked.

(4) Slings shall not be loaded in excess of their rated capacities.

(5) Slings used in a basket hitch shall have the loads balanced to prevent slippage.

(6) Slings shall be securely attached to their loads.

(7) Slings shall be padded or protected from the sharp edges of their loads.

(8) Suspended loads shall be kept clear of all obstructions.

(9) All employees shall be kept clear of loads about to be lifted and of suspended loads.

(10) Hands or fingers shall not be placed between the sling and its load while the sling is being tightened around the load.

(11) Shock loading is prohibited.

(12) A sling shall not be pulled from under a load when the load is resting on the sling.

[Order 76-6, § 296-24-29419, filed 3/1/76.]

WAC 296-24-29421 Inspections. Each day before being used, the sling and all fastenings and attachments shall be inspected for damage or defects by a competent person designated by the employer. Additional inspections shall be performed during sling use, where service conditions warrant. Damaged or defective slings shall be immediately removed from service.

[Order 76-6, § 296-24-29421, filed 3/1/76.]

WAC 296-24-29423 Alloy steel chain slings. (1) Sling identification. Alloy steel chain slings shall have permanently affixed durable identification stating size, grade, rated capacity and reach.

(2) Attachments.

(a) Hooks, rings, oblong links, pear shaped links, welded or mechanical coupling links or other attachments shall have a rated capacity at least equal to that of the alloy steel chain with which they are used or the sling shall not be used in excess of the rated capacity of the weakest component.

(b) Makeshift links or fasteners formed from bolts or rods, or other such attachments, shall not be used.

(3) Inspections.

(a) In addition to the inspection required by WAC 296-24-29421, a thorough periodic inspection of alloy steel chain slings in use shall be made on a regular basis, to be determined on the basis of:

(i) Frequency of sling use;

(ii) Severity of service conditions;

(iii) Nature of lifts being made; and

(iv) Experience gained on the service life of slings used in similar circumstances. Such inspections shall in no event be at intervals greater than once every 12 months.

(b) The employer shall make and maintain a record of the most recent month in which each alloy steel chain sling was thoroughly inspected, and shall make such record available for examination.

(c) The thorough inspection of alloy steel chain slings shall be performed by a competent person designated by the employer, and shall include a thorough inspection for wear, defective welds, deformation and increase in length. Where such defects or deterioration are present, the sling shall be immediately removed from service.

(4) Proof testing. The employer shall ensure that before use, each new, repaired, or reconditioned alloy steel chain sling, including all welded components in the sling assembly, shall be proof tested by the sling manufacturer or equivalent entity, in accordance with paragraph 5.2 of the American Society of Testing and Materials Specification A391-65 (ANSI G61.1-1968). The employer shall retain a certificate of the proof test and shall make it available for examination.

(5) Sling use. Alloy steel chain slings shall not be used with loads in excess of the rated capacities prescribed in Table D-1. Slings not included in this table shall be used only in accordance with the manufacturer's recommendations.

(6) Safe operating temperatures. Alloy steel chain slings shall be permanently removed from service if they are heated above 1000°F. When exposed to service temperatures in excess of 600°F maximum working load limits permitted in Table D-1 shall be reduced in accordance with the chain or sling manufacturer's recommendations.

(7) Repairing and reconditioning alloy steel chain slings.

(a) Worn or damaged alloy steel chain slings or attachments shall not be used until repaired. When welding or heat testing is performed, slings shall not be used unless repaired, reconditioned and proof tested by the sling manufacturer or an equivalent entity.

(b) Mechanical coupling links or low carbon steel repair links shall not be used to repair broken lengths of chain.

(8) Effects of wear. If the chain size at any point of any links is less than that stated in Table D-2, the sling shall be removed from service.

(9) Deformed attachments.

(a) Alloy steel chain sling with cracked or deformed master links, coupling links or other components shall be removed from service.

(b) Slings shall be removed from service if hooks are cracked, have been opened more than 15 percent of the normal throat opening measured at the narrowest point or twisted more than 10 degrees from the plane of the unbent hook.

[Order 76-29, § 296-24-29423, filed 9/30/76; Order 76-6, § 296-24-29423, filed 3/1/76.]

WAC 296-24-29425 Wire rope slings. (1) Sling use. Wire rope slings shall not be used with loads in excess of the rated capacities shown in Tables D-3 through D-14. Slings not included in these tables shall be used only in accordance with the manufacturer's recommendations.

(2) Minimum sling lengths.

(a) Cable laid and 6x19 and 6x37 slings shall have a minimum clear length of wire rope 10 times the component rope diameter between splices, sleeves or end fittings.

(b) Braided slings shall have a minimum clear length of wire rope 40 times the component rope diameter between the loops or end fittings.

(c) Cable laid grommets, strand laid grommets and endless slings shall have a minimum circumferential length of 96 times their body diameter.

(3) Safe operating temperatures. Fiber core wire rope slings of all grades shall be permanently removed from service if they are exposed to temperatures in excess of 200°F. When nonfiber core wire rope slings of any grade are used at temperatures above 400°F or below minus 60°F, recommendations of the sling manufacturer regarding use at that temperature shall be followed.

(4) End attachments.

(a) Welding of end attachments, except covers to thimbles, shall be performed prior to the assembly of the sling.

(b) All welded end attachments shall not be used unless proof tested by the manufacturer or equivalent entity at twice their rated capacity prior to initial use. The employer shall retain a certificate of the proof test, and make it available for examination.

(5) Removal from service. Wire rope slings shall be immediately removed from service if any of the following conditions are present:

(a) Ten randomly distributed broken wires in one rope lay, or five broken wires in one strand in one rope lay.

(b) Wear or scraping of one-third the original diameter of outside individual wires.

(c) Kinking, crushing, bird caging or any other damage resulting in distortion of the wire rope structure.

(d) Evidence of heat damage.

(e) End attachments that are cracked, deformed or worn.

(f) Hooks that have been opened more than 15 percent of the normal throat opening measured at the narrowest point or twisted more than 10 degrees from the plane of the unbent hook.

(g) Corrosion of the rope or end attachments.

[Statutory Authority: RCW 49.17.040, 49.17.150, and 49.17.240. 79-08-115 (Order 79-9), § 296-24-29425, filed 7/31/79; Order 76-6, § 296-24-29425, filed 3/1/76.]

WAC 296-24-29427 Metal mesh slings. (1) Sling marking. Each metal mesh sling shall have permanently affixed to it a durable marking that states the rated capacity for vertical basket hitch and choker hitch loadings.

(2) Handles. Handles shall have a rated capacity at least equal to the metal fabric and exhibit no deformation after proof testing.

(3) Attachments of handles to fabric. The fabric and handles shall be joined so that:

(a) The rated capacity of the sling is not reduced.

(b) The load is evenly distributed across the width of the fabric.

(c) Sharp edges will not damage the fabric.

(4) Sling coatings. Coatings which diminish the rated capacity of a sling shall not be applied.

(5) Sling testing. All new and repaired metal mesh slings, including handles, shall not be used unless proof tested by the manufacturer or equivalent entity at a minimum of 1-1/2 times their rated capacity. Elastomer impregnated slings shall be proof tested before coating.

(6) Proper use of metal mesh slings. Metal mesh slings shall not be used to lift loads in excess of their rated capacities as prescribed in Table D-15. Slings not included in this table shall be used only in accordance with the manufacturer's recommendations.

(7) Safe operating temperatures. Metal mesh slings which are not impregnated with elastomers may be used in a temperature range from minus 20°F to plus 550°F without decreasing the working load limit. Metal mesh slings impregnated with polyvinyl chloride or neoprene may be used only in a temperature range from zero degrees to plus 200°F. For operations outside these temperature ranges or for metal mesh slings impregnated with other materials, the sling manufacturer's recommendations shall be followed.

(8) Repairs.

(a) Metal mesh slings which are repaired shall not be used unless repaired by a metal mesh sling manufacturer or an equivalent entity.

(b) Once repaired, each sling shall be permanently marked or tagged, or a written record maintained, to indicate the date and nature of the repairs and the person or organization that performed the repairs. Records of repairs shall be made available for examination.

(9) Removal from service. Metal mesh slings shall be immediately removed from service if any of the following conditions are present:

(a) A broken weld or broken brazed joint along the sling edge.

(b) Reduction in wire diameter of 25 percent due to abrasion or 15 percent due to corrosion.

(c) Lack of flexibility due to distortion of the fabric.

(d) Distortion of the female handle so that the depth of the slot is increased more than 10 percent.

(e) Distortion of either handle so that the width of the eye is decreased more than 10 percent.

(f) A 15 percent reduction of the original cross sectional area of metal at any point around the handle eye.

(g) Distortion of either handle out of its plane.

[Order 76-6, § 296-24-29427, filed 3/1/76.]

WAC 296-24-29429 Natural and synthetic fiber rope slings. (1) Sling use.

(a) Fiber rope slings made from conventional three strand construction fiber rope shall not be used with loads in excess of the rated capacities prescribed in Tables D-16 through D-19.

(b) Fiber rope slings shall have a diameter of curvature meeting at least the minimums specified in Figs. D-4 and D-5.

(c) Slings not included in these tables shall be used only in accordance with the manufacturer's recommendations.

(2) Safe operating temperatures. Natural and synthetic fiber rope slings, except for wet frozen slings, may be used in a temperature range from minus 20°F to plus 180°F without decreasing the working load limit. For operations outside this temperature range and for wet frozen slings, the sling manufacturer's recommendations shall be followed.

(3) Splicing. Spliced fiber rope slings shall not be used unless they have been spliced in accordance with the following minimum requirements and in accordance with any additional recommendations of the manufacturer:

(a) In manila rope, eye splices shall consist of at least three full tucks, and short splices shall consist of at least six full tucks, three on each side of the splice center line.

(b) In synthetic fiber rope, eye splices shall consist of at least four full tucks, and short splices shall consist of at least eight full tucks, four on each side of the center line.

(c) Strand end tails shall not be trimmed flush with the surface of the rope immediately adjacent to the full tucks. This applies to all types of fiber rope and both eye and short splices. For fiber rope under one inch in diameter, the tail shall project at least six rope diameters beyond the last full

tuck. For fiber rope one inch in diameter and larger, the tail shall project at least six inches beyond the last full tuck. Where a projecting tail interferes with the use of the sling, the tail shall be tapered and spliced into the body of the rope using at least two additional tucks (which will require a tail length of approximately six rope diameters beyond the last full tuck).

(d) Fiber rope slings shall have a minimum clear length of rope between eye splices equal to 10 times the rope diameter.

(e) Knots shall not be used in lieu of splices.

(f) Clamps not designed specifically for fiber ropes shall not be used for splicing.

(g) For all eye splices, the eye shall be of such size to provide an included angle of not greater than 60 degrees at the splice when the eye is placed over the load or support.

(4) End attachments. Fiber rope slings shall not be used if end attachments in contact with the rope have sharp edges or projections.

(5) Removal from service. Natural and synthetic fiber rope slings shall be immediately removed from service if any of the following conditions are present:

(a) Abnormal wear.

(b) Powdered fiber between strands.

(c) Broken or cut fibers.

(d) Variations in the size or roundness of strands.

(e) Discoloration or rotting.

(f) Distortion of hardware in the sling.

(6) Repairs. Only fiber rope slings made from new rope shall be used. Use of repaired or reconditioned fiber rope slings is prohibited.

[Order 76-6, § 296-24-29429, filed 3/1/76.]

WAC 296-24-29431 Synthetic web slings. (1) Sling identification. Each sling shall be marked or coded to show the rated capacities for each type of hitch and type of synthetic web material.

(2) Webbing. Synthetic webbing shall be of uniform thickness and width and selvage edges shall not be split from the webbing's width.

(3) Fittings. Fittings shall be:

(a) Of a minimum breaking strength equal to that of the sling; and

(b) Free of all sharp edges that could in any way damage the webbing.

(4) Attachment of end fittings to webbing and formation of eyes. Stitching shall be the only method used to attach end fittings to webbing and to form eyes. The thread shall be in an even pattern and contain a sufficient number of stitches to develop the full breaking strength of the sling.

(5) Sling use. Synthetic web slings illustrated in Figure D-6 shall not be used with loads in excess of the rated capacities specified in Tables D-20 through D-22. Slings not included in these tables shall be used only in accordance with the manufacturer's recommendations.

(6) Environmental conditions. When synthetic web slings are used, the following precautions shall be taken:

(a) Nylon web slings shall not be used where fumes, vapors, sprays, mists or liquids of acids or phenolics are present.

(b) Polyester and polypropylene web slings shall not be used where fumes, vapors, sprays, mists or liquids of caustics are present.

(c) Web slings with aluminum fittings shall not be used where fumes, vapors, sprays, mists or liquids of caustics are present.

(7) Safe operating temperatures. Synthetic web slings of polyester and nylon shall not be used at temperatures in excess of 180°F. Polypropylene web slings shall not be used at temperatures in excess of 200°F.

(8) Repairs.

(a) Synthetic web slings which are repaired shall not be used unless repaired by a sling manufacturer or an equivalent entity.

(b) Each repaired sling shall be proof tested by the manufacturer or equivalent entity to twice the rated capacity prior to its return to service. The employer shall retain a certificate of the proof test and make it available for examination.

(c) Slings, including webbing and fittings, which have been repaired in a temporary manner shall not be used.

(9) Removal from service. Synthetic web slings shall be immediately removed from service if any of the following conditions are present:

(a) Acid or caustic burns;

(b) Melting or charring of any part of the sling surface;

(c) Snags, punctures, tears or cuts;

(d) Broken or worn stitches; or

(e) Distortion of fittings.

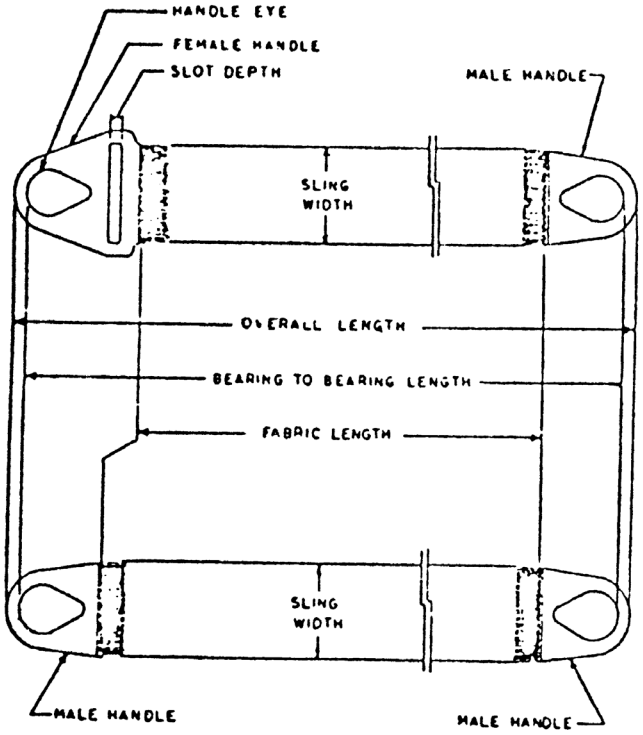

Figure D-1
Metal Mesh Sling (Typical)

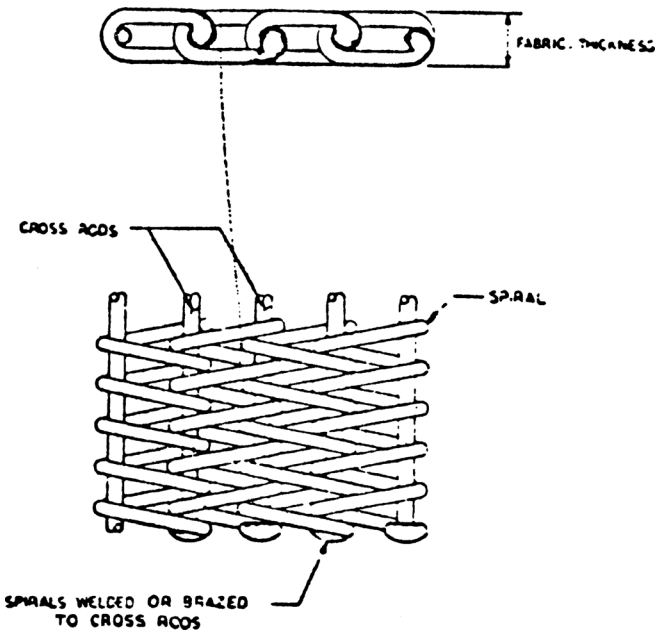

Figure D-2
Metal Mesh Construction

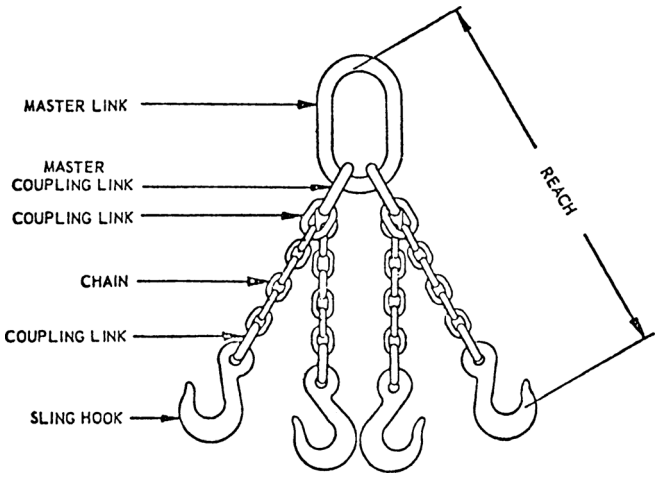

Figure D-3
Major Components of a Quadruple Sling

TABLE D-1

RATED CAPACITY (WORKING LOAD LIMIT), FOR ALLOY STEEL CHAIN SLINGS* RATED CAPACITY (WORKING LOAD LIMIT), POUNDS

TABLE D-1: Part 1—Double Slings

Chain Size, Inches	Single Branch Sling - 90 degree Loading	30 degree	Double Sling Vertical Angle[1] 45 degree	60 degree
		60 degree	Horizontal Angle[2] 45 degree	30 degree
1/4	3,250	5,650	4,550	3,250
3/8	6,600	11,400	9,300	6,600
1/2	11,250	19,500	15,900	11,250
5/8	16,500	28,500	23,300	16,500
3/4	23,000	39,800	32,500	23,000
7/8	28,750	49,800	40,600	28,750
1	38,750	67,100	54,800	38,750
1- 1/8	44,500	77,000	63,000	44,500
1- 1/4	57,500	99,500	81,000	57,500
1- 3/8	67,000	116,000	94,000	67,000
1- 1/2	80,000	138,000	112,500	80,000
1- 3/4	100,000	172,000	140,000	100,000

(1)Rating of multileg slings adjusted for angle of loading measured as the included angle between the inclined leg and the vertical as shown in Figure D-5.

(2)Rating of multileg slings adjusted for angle of loading between the inclined leg and the horizontal plane of the load, as shown in Figure D-5.

(3)Quadruple sling rating is same as triple sling because normal lifting practice may not distribute load uniformly to all 4 legs.

TABLE D-1: Part 2—Triple and Quadruple Slings

Chain Size, Inches	Single Branch Sling - 90 degree Loading	30 degree	Triple and Quadruple Sling(3) Vertical Angle(1) 45 degree	60 degree
		60 degree	Horizontal Angle(2) 45 degree	30 degree
1/4	3,250	8,400	6,800	4,900
3/8	6,600	17,000	14,000	9,900
1/2	11,250	29,000	24,000	17,000
5/8	16,500	43,000	35,000	24,500
3/4	23,000	59,500	48,500	34,500
7/8	28,750	74,500	61,000	43,000
1	38,750	101,000	82,000	58,000
1- 1/8	44,500	115,500	94,500	66,500
1- 1/4	57,500	149,000	121,500	86,000
1- 3/8	67,000	174,000	141,000	100,500
1- 1/2	80,000	207,000	169,000	119,500
1- 3/4	100,000	258,000	210,000	150,000

(1)Rating of multileg slings adjusted for angle of loading measured as the included angle between the inclined leg and the vertical as shown in Figure D-5.

(2)Rating of multileg slings adjusted for angle of loading between the inclined leg and the horizontal plane of the load, as shown in Figure D-5.

(3)Quadruple sling rating is same as triple sling because normal lifting practice may not distribute load uniformly to all 4 legs.

TABLE D-2

MINIMUM ALLOWABLE CHAIN SIZE AT ANY POINT OF LINK

Chain Size, Inches	Minimum Allowable Chain Size, Inches
1/4	13/64
3/8	19/64
1/2	25/64
5/8	31/64
3/4	19/32
7/8	45/64
1	13/16
1- 1/8	29/32
1- 1/4	1
1- 3/8	1- 3/32
1- 1/2	1- 3/16
1- 3/4	1-13/32

TABLE D-3

RATED CAPACITIES FOR SINGLE LEG SLINGS 6x19 AND 6x37 CLASSIFICATION IMPROVED PLOW STEEL GRADE ROPE WITH FIBER CORE (FC)

Rope		Rated Capacities, Tons (2,000 lb)								
Dia.	Constr.	Vertical			Choker			Vertical Basket*		
(Inches)		HT	MS	S	HT	MS	S	HT	MS	S
1/4	6x19	0.49	0.51	0.55	0.37	0.38	0.41	0.99	1.0	1.1
5/16	6x19	0.76	0.79	0.85	0.57	0.59	0.64	1.5	1.6	1.7
3/8	6x19	1.1	1.1	1.2	0.80	0.85	0.91	2.1	2.2	2.4
7/16	6x19	1.4	1.5	1.6	1.1	1.1	1.2	2.9	3.0	3.3
1/2	6x19	1.8	2.0	2.1	1.4	1.5	1.6	3.7	3.9	4.3
9/16	6x19	2.3	2.5	2.7	1.7	1.9	2.0	4.6	5.0	5.4
5/8	6x19	2.8	3.1	3.3	2.1	2.3	2.5	5.6	6.2	6.7
3/4	6x19	3.9	4.4	4.8	2.9	3.3	3.6	7.8	8.8	9.5
7/8	6x19	5.1	5.9	6.4	3.9	4.5	4.8	10.0	12.0	13.0
1	6x19	6.7	7.7	8.4	5.0	5.8	6.3	13.0	15.0	17.0
1- 1/8	6x19	8.4	9.5	10.0	6.3	7.1	7.9	17.0	19.0	21.0
1- 1/4	6x37	9.8	11.0	12.0	7.4	8.3	9.2	20.0	22.0	25.0
1- 3/8	6x37	12.0	13.0	15.0	8.9	10.0	11.0	24.0	27.0	30.0
1- 1/2	6x37	14.0	16.0	17.0	10.0	12.0	13.0	28.0	32.0	35.0
1- 5/8	6x37	16.0	18.0	21.0	12.0	14.0	15.0	33.0	37.0	41.0
1- 3/4	6x37	19.0	21.0	24.0	14.0	16.0	18.0	38.0	43.0	48.0
2	6x37	25.0	28.0	31.0	18.0	21.0	23.0	49.0	55.0	62.0

HT = Hand tucked splice and hidden tuck splice
For hidden tuck splice (IWRC) use value in HT columns.
MS = Mechanical splice.
S = Swaged or zinc poured socket.
* These values only apply when the D/d ratio for HT slings is 10 or greater, and for MS and S slings is 20 or greater where:
D = Diameter of curvature around which the body of the sling is bent.
d = Diameter of rope.

TABLE D-4

RATED CAPACITIES FOR SINGLE LEG SLINGS 6x19 AND 6x37 CLASSIFICATION IMPROVED PLOW STEEL GRADE ROPE WITH INDEPENDENT WIRE ROPE CORE (IWRC)

Rope		Rated Capacities, Tons (2,000 lb)								
Dia.	Constr.	Vertical			Choker			Vertical Basket*		
(Inches)		HT	MS	S	HT	MS	S	HT	MS	S
1/4	6x19	0.53	0.56	0.59	0.40	0.42	0.44	1.0	1.1	1.2
5/16	6x19	0.81	0.87	0.92	0.61	0.65	0.69	1.6	1.7	1.8
3/8	6x19	1.1	1.2	1.3	0.86	0.93	0.98	2.3	2.5	2.6
7/16	6x19	1.5	1.7	1.8	1.2	1.3	1.3	3.1	3.4	3.5
1/2	6x19	2.0	2.2	2.3	1.5	1.6	1.7	3.9	4.4	4.6
9/16	6x19	2.5	2.7	2.9	1.8	2.1	2.2	4.9	5.5	5.8
5/8	6x19	3.0	3.4	3.6	2.2	2.5	2.7	6.0	6.8	7.2
3/4	6x19	4.2	4.9	5.1	3.1	3.6	3.8	8.4	9.7	10.0
7/8	6x19	5.5	6.6	6.9	4.1	4.9	5.2	11.0	13.0	14.0
1	6x19	7.2	8.5	9.0	5.4	6.4	6.7	14.0	17.0	18.0
1- 1/8	6x19	9.0	10.0	11.0	6.8	7.8	8.5	18.0	21.0	23.0
1- 1/4	6x37	10.0	12.0	13.0	7.9	9.2	9.9	21.0	24.0	26.0
1- 3/8	6x37	13.0	15.0	16.0	9.6	11.0	12.0	25.0	29.0	32.0
1- 1/2	6x37	15.0	17.0	19.0	11.0	13.0	14.0	30.0	35.0	38.0
1- 5/8	6x37	18.0	20.0	22.0	13.0	15.0	17.0	35.0	41.0	44.0
1- 3/4	6x37	20.0	24.0	26.0	15.0	18.0	19.0	41.0	47.0	51.0
2	6x37	26.0	30.0	33.0	20.0	23.0	25.0	53.0	61.0	66.0

HT = Hand tucked splice.
For hidden tuck splice (IWRC) use Table I value in HT columns.
MS = Mechanical splice.
S = Swaged or zinc poured socket.
* These values only apply when the D/d ratio for HT slings is 10 or greater, and for MS and S slings is 20 or greater where:
D = Diameter of curvature around which the body of the sling is bent.
d = Diameter of rope.

TABLE D-5

RATED CAPACITIES FOR SINGLE LEG SLINGS CABLE LAID ROPE - MECHANICAL SPLICE ONLY 7x7x7 AND 7x7x19 CONSTRUCTIONS GALVANIZED AIRCRAFT GRADE ROPE 7x6x19 IWRC CONSTRUCTION IMPROVED PLOW STEEL GRADE ROPE

Rope		Rated Capacities, Tons (2,000 lb)		
Dia. (Inches)	Constr.	Vertical	Choker	Vertical Basket*
1/4	7x7x7	0.50	0.38	1.0
3/8	7x7x7	1.1	0.81	2.0
1/2	7x7x7	1.8	1.4	3.7
5/8	7x7x7	2.8	2.1	5.5
3/4	7x7x7	3.8	2.9	7.6
5/8	7x7x19	2.9	2.2	5.8
3/4	7x7x19	4.1	3.0	8.1
7/8	7x7x19	5.4	4.0	11.0
1	7x7x19	6.9	5.1	14.0
1- 1/8	7x7x19	8.2	6.2	16.0
1- 1/4	7x7x19	9.9	7.4	20.0
3/4	7x6x19 IWRC	3.8	2.8	7.6
7/8	7x6x19 IWRC	5.0	3.8	10.0
1	7x6x19 IWRC	6.4	4.8	13.0
1- 1/8	7x6x19 IWRC	7.7	5.8	15.0
1- 1/4	7x6x19 IWRC	9.2	6.9	18.0
1- 5/16	7x6x19 IWRC	10.0	7.5	20.0
1- 3/8	7x6x19 IWRC	11.0	8.2	22.0
1- 1/2	7x6x19 IWRC	13.0	9.6	26.0

*These values only apply when the D/d ratio is 10 or greater where:
D = Diameter of curvature around which the body of the sling is bent.
d = Diameter of rope.

TABLE D-6

RATED CAPACITIES FOR SINGLE LEG SLINGS 8-PART AND 6-PART BRAIDED ROPE 6x7 AND 6x19 CONSTRUCTION IMPROVED PLOW STEEL GRADE ROPE 7x7 CONSTRUCTION GALVANIZED AIRCRAFT GRADE ROPE

Component Ropes		Rated Capacities, Tons (2,000 lb)					
Diameter						Basket Vertical	
(inches)	Constr.	Vertical		Choker		to 30 degrees*	
		8-Part	6-Part	8-Part	6-Part	8-Part	6-Part
3/32	6x7	0.42	0.32	0.32	0.24	0.74	0.55
1/8	6x7	0.76	0.57	0.57	0.42	1.3	0.98
3/16	6x7	1.7	1.3	1.3	0.94	2.9	2.2
3/32	7x7	0.51	0.39	0.38	0.29	0.89	0.67
1/8	7x7	0.95	0.71	0.71	0.53	1.6	1.2
3/16	7x7	2.1	1.5	1.5	1.2	3.6	2.7
3/16	6x19	1.7	1.3	1.3	0.98	3.0	2.2
1/4	6x19	3.1	2.3	2.3	1.7	5.3	4.0
5/16	6x19	4.8	3.6	3.6	2.7	8.3	6.2
3/8	6x19	6.8	5.1	5.1	3.8	12.0	8.9
7/16	6x19	9.3	6.9	6.9	5.2	16.0	12.0
1/2	6x19	12.0	9.0	9.0	6.7	21.0	15.0
9/16	6x19	15.0	11.0	11.0	8.5	26.0	20.0
5/8	6x19	19.0	14.0	14.0	10.0	32.0	24.0
3/4	6x19	27.0	20.0	20.0	15.0	46.0	35.0
7/8	6x19	36.0	27.0	27.0	20.0	62.0	47.0
1	6x19	47.0	35.0	35.0	26.0	81.0	61.0

*These values only apply when the D/d ratio is 20 or greater where:
D = Diameter of curvature around which the body of the sling is bent.
d = Diameter of component rope.

TABLE D-7

RATED CAPACITIES FOR 2-LEG AND 3-LEG BRIDLE SLINGS 6x19 AND 6x37 CLASSIFICATION IMPROVED PLOW STEEL GRADE ROPE WITH FIBER CORE (FC)

TABLE D-7: Part 1— 2-Leg Bridle Slings

Rope		Rated Capacities, Tons (2,000 lb) 2-Leg Bridle Slings					
Dia. (Inches)	Constr.	Vert 30 degree Horz 60 degree		45 degree Angle		Vert 60 degree Horz 30 degree	
		HT	MS	HT	MS	HT	MS
1/4	6x19	0.85	0.88	0.70	0.72	0.49	0.51
5/16	6x19	1.3	1.4	1.1	1.1	0.76	0.79
3/8	6x19	1.8	1.9	1.5	1.6	1.1	1.1
7/16	6x19	2.5	2.6	2.0	2.2	1.4	1.5
1/2	6x19	3.2	3.4	2.6	2.8	1.8	2.0
9/16	6x19	4.0	4.3	3.2	3.5	2.3	2.5
5/8	6x19	4.8	5.3	4.0	4.4	2.8	3.1
3/4	6x19	6.8	7.6	5.5	6.2	3.9	4.4
7/8	6x19	8.9	10.0	7.3	8.4	5.1	5.9
1	6x19	11.0	13.0	9.4	11.0	6.7	7.7
1-1/8	6x19	14.0	16.0	12.0	13.0	8.4	9.5
1-1/4	6x37	17.0	19.0	14.0	16.0	9.8	11.0
1-3/8	6x37	20.0	23.0	17.0	19.0	12.0	13.0
1-1/2	6x37	24.0	27.0	20.0	22.0	14.0	16.0
1-5/8	6x37	28.0	32.0	23.0	26.0	16.0	18.0
1-3/4	6x37	33.0	37.0	27.0	30.0	19.0	21.0
2	6x37	43.0	48.0	35.0	39.0	25.0	28.0

HT = Hand tucked splice.
MS = Mechanical splice.

TABLE D-7: Part 2— 3-Leg Bridle Slings

Rope		Rated Capacities, Tons (2,000 lb) 3-Leg Bridle Slings					
Dia. (Inches)	Constr.	Vert 30 degree Horz 60 degree		45 degree Angle		Vert 60 degree Horz 30 degree	
		HT	MS	HT	MS	HT	MS
1/4	6x19	1.3	1.3	1.0	1.1	0.74	0.76
5/16	6x19	2.0	2.0	1.6	1.7	1.1	1.2
3/8	6x19	2.8	2.9	2.3	2.4	1.6	1.7
7/16	6x19	3.7	4.0	3.0	3.2	2.1	2.3
1/2	6x19	4.8	5.1	3.9	4.2	2.8	3.0
9/16	6x19	6.0	6.5	4.9	5.3	3.4	3.7
5/8	6x19	7.3	8.0	5.9	6.5	4.2	4.6
3/4	6x19	10.0	11.0	8.3	9.3	5.8	6.6
7/8	6x19	13.0	15.0	11.0	13.0	7.7	8.9
1	6x19	17.0	20.0	14.0	16.0	10.0	11.0
1-1/8	6x19	22.0	24.0	18.0	20.0	13.0	14.0
1-1/4	6x37	25.0	29.0	21.0	23.0	15.0	17.0
1-3/8	6x37	31.0	35.0	25.0	28.0	18.0	20.0
1-1/2	6x37	36.0	41.0	30.0	33.0	21.0	24.0
1-5/8	6x37	43.0	48.0	35.0	39.0	25.0	28.0
1-3/4	6x37	49.0	56.0	40.0	45.0	28.0	32.0
2	6x37	64.0	72.0	52.0	59.0	37.0	41.0

HT = Hand tucked splice.
MS = Mechanical splice.

TABLE D-8

RATED CAPACITIES FOR 2-LEG AND 3-LEG BRIDLE SLINGS 6x19 AND 6x37 CLASSIFICATION IMPROVED PLOW STEEL GRADE ROPE WITH INDEPENDENT WIRE ROPE CORE (IWRC)

TABLE D-8: Part 1— 2-Leg Bridle Sling

Rope		Rated Capacities, Tons (2,000 lb) 2-Leg Bridle Slings					
Dia. (Inches)	Constr.	Vert 30 degree Horz 60 degree		45 degree Angle		Vert 60 degree Horz 30 degree	
		HT	MS	HT	MS	HT	MS
1/4	6x19	0.92	0.97	0.75	0.79	0.53	0.56
5/16	6x19	1.4	1.5	1.1	1.2	0.81	0.87
3/8	6x19	2.0	2.1	1.6	1.8	1.1	1.2
7/16	6x19	2.7	2.9	2.2	2.4	1.5	1.7
1/2	6x19	3.4	3.8	2.8	3.1	2.0	2.2
9/16	6x19	4.3	4.8	3.5	3.9	2.5	2.7
5/8	6x19	5.2	5.9	4.2	4.8	3.0	3.4
3/4	6x19	7.3	8.4	5.9	6.9	4.2	4.9
7/8	6x19	9.6	11.0	7.8	9.3	5.5	6.6
1	6x19	12.0	15.0	10.0	12.0	7.2	8.5
1-1/8	6x19	16.0	18.0	13.0	15.0	9.0	10.0
1-1/4	6x37	18.0	21.0	15.0	17.0	10.0	12.0
1-3/8	6x37	22.0	25.0	18.0	21.0	13.0	15.0
1-1/2	6x37	26.0	30.0	21.0	25.0	15.0	17.0
1-5/8	6x37	31.0	35.0	25.0	29.0	18.0	20.0
1-3/4	6x37	35.0	41.0	29.0	33.0	20.0	24.0
2	6x37	46.0	53.0	37.0	43.0	26.0	30.0

HT = Hand tucked splice.
MS = Mechanical splice.

TABLE D-8: Part 2— 3-Leg Bridle Slings

Rope		Rated Capacities, Tons (2,000 lb) 2-Leg Bridle Sling					
Dia. (Inches)	Constr.	Vert 30 degree Horz 60 degree		45 degree Angle		Vert 60 degree Horz 30 degree	
		HT	MS	HT	MS	HT	MS
1/4	6x19	1.4	1.4	1.1	1.2	0.79	0.84
5/16	6x19	2.1	2.3	1.7	1.8	1.2	1.3
3/8	6x19	3.0	3.2	2.4	2.6	1.7	1.9
7/16	6x19	4.0	4.4	3.3	3.6	2.3	2.5
1/2	6x19	5.1	5.7	4.2	4.6	3.0	3.3
9/16	6x19	6.4	7.1	5.2	5.8	3.7	4.1
5/8	6x19	7.8	8.8	6.4	7.2	4.5	5.1
3/4	6x19	11.0	13.0	8.9	10.0	6.3	7.3
7/8	6x19	14.0	17.0	12.0	14.0	8.3	9.9
1	6x19	19.0	22.0	15.0	18.0	11.0	13.0
1-1/8	6x19	23.0	27.0	19.0	22.0	13.0	16.0
1-1/4	6x37	27.0	32.0	22.0	26.0	16.0	18.0
1-3/8	6x37	33.0	38.0	27.0	31.0	19.0	22.0
1-1/2	6x37	39.0	45.0	32.0	37.0	23.0	26.0
1-5/8	6x37	46.0	53.0	38.0	43.0	27.0	31.0
1-3/4	6x37	53.0	61.0	43.0	50.0	31.0	35.0
2	6x37	68.0	79.0	56.0	65.0	40.0	46.0

HT = Hand tucked splice.
MS = Mechanical splice.

TABLE D-9

RATED CAPACITIES FOR 2-LEG AND 3-LEG BRIDLE SLINGS CABLE LAID ROPE - MECHANICAL SPLICE ONLY 7x7x7 AND 7x7x19 CONSTRUCTIONS GALVANIZED AIRCRAFT GRADE ROPE 7x6x19 IWRC CONSTRUCTION IMPROVED PLOW STEEL GRADE ROPE

TABLE D-9: Part 1— 2-Leg Bridle Slings

Rope		Rated Capacities, Tons (2,000 lb) 2-Leg Bridle Sling		
Dia. (Inches)	Constr.	Vert 30 degree Horz 60 degree	45 degree Angle	Vert 60 degree Horz 30 degree
1/4	7x7x7	0.87	0.71	0.50
3/8	7x7x7	1.9	1.5	1.1
1/2	7x7x7	3.2	2.6	1.8
5/8	7x7x7	4.8	3.9	2.8
3/4	7x7x7	6.6	5.4	3.8
5/8	7x7x19	5.0	4.1	2.9
3/4	7x7x19	7.0	5.7	4.1
7/8	7x7x19	9.3	7.6	5.4
1	7x7x19	12.0	9.7	6.9
1-1/8	7x7x19	14.0	12.0	8.2

Rope		Rated Capacities, Tons (2,000 lb) 2-Leg Bridle Sling		
Dia. (Inches)	Constr.	Vert 30 degree Horz 60 degree	45 degree Angle	Vert 60 degree Horz 30 degree
1-1/4	7x7x19	17.0	14.0	9.9
3/4	7x6x19 IWRC	6.6	5.4	3.8
7/8	7x6x19 IWRC	8.7	7.1	5.0
1	7x6x19 IWRC	11.0	9.0	6.4
1-1/8	7x6x19 IWRC	13.0	11.0	7.7
1-1/4	7x6x19 IWRC	16.0	13.0	9.2
1-5/16	7x6x19 IWRC	17.0	14.0	10.0
1-3/8	7x6x19 IWRC	19.0	15.0	11.0
1-1/2	7x6x19 IWRC	22.0	18.0	13.0

TABLE D-9: Part 2— 3-Leg Bridle Slings

Rope		Rated Capacities, Tons (2,000 lb) 3-Leg Bridle Sling		
Dia. (Inches)	Constr.	Vert 30 degree Horz 60 degree	45 degree Angle	Vert 60 degree Horz 30 degree
1/4	7x7x7	1.3	1.1	0.75
3/8	7x7x7	2.8	2.3	1.6
1/2	7x7x7	4.8	3.9	2.8
5/8	7x7x7	7.2	5.9	4.2
3/4	7x7x7	9.9	8.1	5.7
5/8	7x7x19	7.5	6.1	4.3
3/4	7x7x19	10.0	8.6	6.1
7/8	7x7x19	14.0	11.0	8.1
1	7x7x19	18.0	14.0	10.0
1-1/8	7x7x19	21.0	17.0	12.0
1-1/4	7x7x19	26.0	21.0	15.0
3/4	7x6x19 IWRC	9.9	8.0	5.7
7/8	7x6x19 IWRC	13.0	11.0	7.5
1	7x6x19 IWRC	17.0	13.0	9.6
1-1/8	7x6x19 IWRC	20.0	16.0	11.0
1-1/4	7x6x19 IWRC	24.0	20.0	14.0
1-5/16	7x6x19 IWRC	26.0	21.0	15.0
1-3/8	7x6x19 IWRC	28.0	23.0	16.0
1-1/2	7x6x19 IWRC	33.0	27.0	19.0

TABLE D-10

RATED CAPACITIES FOR 2-LEG AND 3-LEG BRIDLE SLINGS 8-PART AND 6-PART BRAIDED ROPE 6x7 AND 6x19 CONSTRUCTION IMPROVED PLOW STEEL GRADE ROPE 7x7 CONSTRUCTION GALVANIZED AIRCRAFT GRADE ROPE

TABLE D-10: Part 1— 2-Leg Bridle Slings

Component Rope		Rated Capacities, Tons (2,000 lb) 2-Leg Bridle Slings					
Dia. (Inches)	Constr.	Vert 30 degree Horz 60 degree		45 degree Angle		Vert 60 degree Horz 30 degree	
		8-Part	6-Part	8-Part	6-Part	8-Part	6-Part
3/32	6x7	0.74	0.55	0.60	0.45	0.42	0.32
1/8	6x7	1.3	0.98	1.1	0.80	0.76	0.57
3/16	6x7	2.9	2.2	2.4	1.8	1.7	1.3
3/32	7x7	0.89	0.67	0.72	0.55	0.51	0.39
1/8	7x7	1.6	1.2	1.3	1.0	0.95	0.71
3/16	7x7	3.6	2.7	2.9	2.2	2.1	1.5
3/16	6x19	3.0	2.2	2.4	1.8	1.7	1.3
1/4	6x19	5.3	4.0	4.3	3.2	3.1	2.3
5/16	6x19	8.3	6.2	6.7	5.0	4.8	3.6
3/8	6x19	12.0	8.9	9.7	7.2	6.8	5.1
7/16	6x19	16.0	12.0	13.0	9.8	9.3	6.9
1/2	6x19	21.0	15.0	17.0	13.0	12.0	9.0
9/16	6x19	26.0	20.0	21.0	16.0	15.0	11.0
5/8	6x19	32.0	24.0	26.0	20.0	19.0	14.0
3/4	6x19	46.0	35.0	38.0	28.0	27.0	20.0
7/8	6x19	62.0	47.0	51.0	38.0	36.0	27.0
1	6x19	81.0	61.0	66.0	50.0	47.0	35.0

TABLE D-10: Part 2— 3-Leg Bridle Slings

Component Rope		Rated Capacities, Tons (2,000 lb) 3-Leg Bridle Slings					
Dia. (Inches)	Constr.	Vert 30 degree Horz 60 degree		45 degree Angle		Vert 60 degree Horz 30 degree	
		8-Part	6-Part	8-Part	6-Part	8-Part	6-Part
3/32	6x7	1.1	0.83	0.90	0.68	0.64	0.48
1/8	6x7	2.0	1.5	1.6	1.2	1.1	0.85
3/16	6x7	4.4	3.3	3.6	2.7	2.5	1.9
3/32	7x7	1.3	1.0	1.1	0.82	0.77	0.58
1/8	7x7	2.5	1.8	2.0	1.5	1.4	1.1
3/16	7x7	5.4	4.0	4.4	3.3	3.1	2.3
3/16	6x19	4.5	3.4	3.7	2.8	2.6	1.9
1/4	6x19	8.0	6.0	6.5	4.9	4.6	3.4
5/16	6x19	12.0	9.3	10.0	7.6	7.1	5.4
3/8	6x19	18.0	13.0	14.0	11.0	10.0	7.7
7/16	6x19	24.0	18.0	20.0	15.0	14.0	10.0
1/2	6x19	31.0	23.0	25.0	19.0	18.0	13.0
9/16	6x19	39.0	29.0	32.0	24.0	23.0	17.0
5/8	6x19	48.0	36.0	40.0	30.0	28.0	21.0
3/4	6x19	69.0	52.0	56.0	42.0	40.0	30.0
7/8	6x19	94.0	70.0	76.0	57.0	54.0	40.0
1	6x19	122.0	91.0	99.0	74.0	70.0	53.0

TABLE D-11

RATED CAPACITIES FOR STRAND LAID GROMMET - HAND TUCKED IMPROVED PLOW STEEL GRADE ROPE

ROPE BODY		RATED CAPACITIES, TONS (2,000 lb)		
Dia. (Inches)	Constr.	Vertical	Choker	Vertical Basket*
1/4	7x19	0.85	0.64	1.7
5/16	7x19	1.3	1.0	2.6
3/8	7x19	1.9	1.4	3.8
7/16	7x19	2.6	1.9	5.2
1/2	7x19	3.3	2.5	6.7
9/16	7x19	4.2	3.1	8.4
5/8	7x19	5.2	3.9	10.00
3/4	7x19	7.4	5.6	15.0
7/8	7x19	10.0	7.5	20.0
1	7x19	13.0	9.7	26.0
1-1/8	7x19	16.0	12.0	32.0
1-1/4	7x37	18.0	14.0	37.0
1-3/8	7x37	22.0	16.0	44.0
1-1/2	7x37	26.0	19.0	52.0

*These values only apply when the D/d ratio is 5 or greater where:
D = Diameter of curvature around which rope is bent.
d = Diameter of rope body.

TABLE D-12

RATED CAPACITIES FOR CABLE LAID GROMMET - HAND TUCKED 7x6x7 AND 7x6x19 CONSTRUCTIONS IMPROVED PLOW STEEL GRADE ROPE 7x7x7 CONSTRUCTION GALVANIZED AIRCRAFT GRADE ROPE

CABLE BODY		RATED CAPACITIES, TONS (2,000 lb)		
Dia. (Inches)	Constr.	Vertical	Choker	Vertical Basket*
3/8	7x6x7	1.3	0.95	2.5
9/16	7x6x7	2.8	2.1	5.6
5/8	7x6x7	3.8	2.8	7.6
3/8	7x7x7	1.6	1.2	3.2
9/16	7x7x7	3.5	2.6	6.9
5/8	7x7x7	4.5	3.4	9.0
5/8	7x6x19	3.9	3.0	7.9
3/4	7x6x19	5.1	3.8	10.0
15/16	7x6x19	7.9	5.9	16.0
1-1/8	7x6x19	11.0	8.4	22.0
1-5/16	7x6x19	15.0	11.0	30.0
1-1/2	7x6x19	19.0	14.0	39.0
1-11/16	7x6x19	24.0	18.0	49.0
1-7/8	7x6x19	30.0	22.0	60.0
2-1/4	7x6x19	42.0	31.0	84.0
2-5/8	7x6x19	56.0	42.0	112.0

*These values only apply when the D/d ratio is 5 or greater where:
D = Diameter of curvature around which cable body is bent.
d = Diameter of cable body.

TABLE D-13

RATED CAPACITIES FOR STRAND LAID ENDLESS SLINGS - MECHANICAL JOINT IMPROVED PLOW STEEL GRADE ROPE

ROPE BODY		RATED CAPACITIES, TONS (2,000 lb)		
Dia. (Inches)	Constr.	Vertical	Choker	Vertical Basket*
1/4	6x19 IWRC	0.92	0.69	1.8
3/8	6x19 IWRC	2.0	1.5	4.1
1/2	6x19 IWRC	3.6	2.7	7.2
5/8	6x19 IWRC	5.6	4.2	11.0
3/4	6x19 IWRC	8.0	6.0	16.0
7/8	6x19 IWRC	11.0	8.1	21.0
1	6x19 IWRC	14.0	10.0	28.0
1-1/8	6x19 IWRC	18.0	13.0	35.0
1-1/4	6x37 IWRC	21.0	15.0	41.0
1-3/8	6x37 IWRC	25.0	19.0	50.0
1-1/2	6x37 IWRC	29.0	22.0	59.0

*These values only apply when the D/d ratio is 5 or greater where:
D = Diameter of curvature around which rope is bent.
d = Diameter of rope body.

TABLE D-14

RATED CAPACITIES FOR CABLE LAID ENDLESS SLINGS - MECHANICAL JOINT 7x7x7 AND 7x7x19 CONSTRUCTIONS GALVANIZED AIRCRAFT GRADE ROPE 7x6x19 IWRC CONSTRUCTION IMPROVED PLOW STEEL GRADE ROPE

CABLE BODY		RATED CAPACITIES, TONS (2,000 lb)		
Dia. (Inches)	Constr.	Vertical	Choker	Vertical Basket*
1/4	7x7x7	0.83	0.62	1.6
3/8	7x7x7	1.8	1.3	3.5
1/2	7x7x7	3.0	2.3	6.1
5/8	7x7x7	4.5	3.4	9.1
3/4	7x7x7	6.3	4.7	12.0
5/8	7x7x19	4.7	3.5	9.5
3/4	7x7x19	6.7	5.0	13.0
7/8	7x7x19	8.9	6.6	18.0
1	7x7x19	11.0	8.5	22.0
1-1/8	7x7x19	14.0	10.0	28.0
1-1/4	7x7x19	17.0	12.0	33.0
3/4	7x6x19 IWRC	6.2	4.7	12.0
7/8	7x6x19 IWRC	8.3	6.2	16.0
1	7x6x19 IWRC	10.0	7.9	21.0
1-1/8	7x6x19 IWRC	13.0	9.7	26.0
1-1/4	7x6x19 IWRC	16.0	12.0	31.0
1-3/8	7x6x19 IWRC	18.0	14.0	37.0
1-1/2	7x6x19 IWRC	22.0	16.0	43.0

*These values only apply when the D/d value is 5 or greater where:
D = Diameter of curvature around which cable body is bent.
d = Diameter of cable body.

TABLE D-15

RATED CAPACITIES
CARBON STTEL AND STAINLESS STEEL
METAL MESH SLINGS

SLING WIDTH IN INCHES	VERTICAL OR CHOKER	VERTICAL BASKET	EFFECT OF ANGLE ON RATED CAPACITIES IN BASKET HITCH: 30 deg Vertical 60 deg Horizontal	45 deg Vertical 45 deg Horizontal	60 deg Vertical 30 deg Horizontal
Heavy Duty-10 Ga 35 Spirals/Ft of sling width					
2	1,500	3,000	2,600	2,100	1,500
3	2,700	5,400	4,700	3,800	2,700
4	4,000	8,000	6,900	5,600	4,000
6	6,000	12,000	10,400	8,400	6,000
8	8,000	16,000	13,800	11,300	8,000
10	10,000	20,000	17,000	14,100	10,000
12	12,000	24,000	20,700	16,900	12,000
14	14,000	28,000	24,200	19,700	14,000
16	16,000	32,000	27,700	22,600	16,000
18	18,000	36,000	31,100	25,400	18,000
20	20,000	40,000	34,600	28,200	20,000

SLING WIDTH IN INCHES	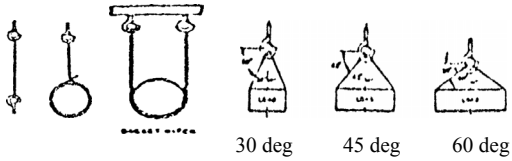 VERTICAL OR CHOKER	VERTICAL BASKET	EFFECT OF ANGLE ON RATED CAPACITIES IN BASKET HITCH: 30 deg Vertical 60 deg Horizontal	45 deg Vertical 45 deg Horizontal	60 deg Vertical 30 deg Horizontal
Medium Duty-12 Ga 43 Spirals/Ft of sling width					
2	1,350	2,700	2,300	1,900	1,400
3	2,000	4,000	3,500	2,800	2,000
4	2,700	5,400	4,700	3,800	2,700
6	4,500	9,000	7,800	6,400	4,500
8	6,000	12,000	10,400	8,500	6,000
10	7,500	15,000	13,000	10,600	7,500
12	9,000	18,000	15,600	12,700	9,000
14	10,500	21,000	18,200	14,800	10,500
16	12,000	24,000	20,800	17,000	12,000
18	13,500	27,000	23,400	19,100	13,500
20	15,000	30,000	26,000	21,200	15,000
Light Duty-14 Ga 59 Spirals/Ft of sling width					
2	900	1,800	1,600	1,300	900
3	1,400	2,800	2,400	2,000	1,400
4	2,000	4,000	3,500	2,800	2,000
6	3,000	6,000	5,200	4,200	3,000
8	4,000	8,000	6,900	5,700	4,000
10	5,000	10,000	8,600	7,100	5,000
12	6,000	12,000	10,400	8,500	6,000
14	7,000	14,000	12,100	9,900	7,000
16	8,000	16,000	13,900	11,300	8,000
18	9,000	18,000	15,600	12,700	9,000
20	10,000	20,000	17,300	14,100	10,000

TABLE D-16

MANILA ROPE SLINGS

TABLE D-16: Part 1—Eye and Eye Sling

Rope Diameter Nominal in Inches	Nominal Weight per 100 ft. in Pounds	EYE & EYE SLING: Vertical Hitch	Choker Hitch	BASKET HITCH: Angle of Rope to Horizontal 90° / Angle of Rope to Vertical 0°	60° / 30°	45° / 45°	30° / 60°
1/2	7.5	480	240	960	830	680	480
9/16	10.4	620	310	1,240	1,070	875	620
5/8	13.3	790	395	1,580	1,370	1,120	790
3/4	16.7	970	485	1,940	1,680	1,370	970
13/16	19.5	1,170	585	2,340	2,030	1,650	1,170
7/8	22.5	1,390	695	2,780	2,410	1,970	1,390
1"	27.0	1,620	810	3,240	2,810	2,290	1,620
1 1/16	31.3	1,890	945	3,780	3,270	2,670	1,890
1 1/8	36.0	2,160	1,080	4,320	3,740	3,050	2,160
1 1/4	41.7	2,430	1,220	4,860	4,210	3,440	2,430
1 5/16	47.9	2,700	1,350	5,400	4,680	3,820	2,700
1 1/2	59.9	3,330	1,670	6,660	5,770	4,710	3,330
1 5/8	74.6	4,050	2,030	8,100	7,010	5,730	4,050
1 3/4	89.3	4,770	2,390	9,540	8,260	6,740	4,770
2"	107.5	5,580	2,790	11,200	9,660	7,890	5,580
2 1/8	125.0	6,480	3,240	13,000	11,200	9,160	6,480
2 1/4	146.0	7,380	3,690	14,800	12,800	10,400	7,380
2 1/2	166.7	8,370	4,190	16,700	14,500	11,800	8,370
2 5/8	190.8	9,360	4,680	18,700	16,200	13,200	9,360

See Figures D-4 and D-5 for sling configuration description.

TABLE D-16: Part 2—Endless Sling

Rope Diameter Nominal in Inches	Nominal Weight per 100 ft. in Pounds	ENDLESS SLING: Vertical Hitch	Choker Hitch	BASKET HITCH: Angle of Rope to Horizontal 90° / Angle of Rope to Vertical 0°	60° / 30°	45° / 45°	30° / 60°
1/2	7.5	865	430	1,730	1,500	1,220	865
9/16	10.4	1,120	560	2,230	1,930	1,580	1,120
5/8	13.3	1,420	710	2,840	2,460	2,010	1,420
3/4	16.7	1,750	875	3,490	3,020	2,470	1,750
13/16	19.5	2,110	1,050	4,210	3,650	2,980	2,110
7/8	22.5	2,500	1,250	5,000	4,330	3,540	2,500
1"	27.0	2,920	1,460	5,830	5,050	4,120	2,920
1 1/16	31.3	3,400	1,700	6,800	5,890	4,810	3,400
1 1/8	36.0	3,890	1,940	7,780	6,730	5,500	3,890
1 1/4	41.7	4,370	2,190	8,750	7,580	6,190	4,370
1 5/16	47.9	4,860	2,430	9,720	8,420	6,870	4,860
1 1/2	59.9	5,990	3,000	12,000	10,400	8,480	5,990
1 5/8	74.6	7,290	3,650	14,600	12,600	10,300	7,290
1 3/4	89.3	8,590	4,290	17,200	14,900	12,100	8,590
2"	107.5	10,000	5,020	20,100	17,400	14,200	10,000
2 1/8	125.0	11,700	5,830	23,300	20,200	16,500	11,700
2 1/4	146.0	13,300	6,640	26,600	23,000	18,800	13,300
2 1/2	166.7	15,100	7,530	30,100	26,100	21,300	15,100
2 5/8	190.8	16,800	8,420	33,700	29,200	23,800	16,800

See Figures D-4 and D-5 for sling configuration description.

TABLE D-17

NYLON ROPE SLINGS

TABLE D-17: Part 1—Eye and Eye Sling

Rope Diameter Nominal in Inches	Nominal Weight per 100 ft. in Pounds	EYE & EYE SLING: Vertical Hitch	Choker Hitch	BASKET HITCH: Angle of Rope to Horizontal 90° / Angle of Rope to Vertical 0°	60° / 30°	45° / 45°	30° / 60°
1/2	6.5	635	320	1,270	1,100	900	635
9/16	8.3	790	395	1,580	1,370	1,120	790
5/8	10.5	1,030	515	2,060	1,780	1,460	1,030
3/4	14.5	1,410	705	2,820	2,440	1,990	1,410
13/16	17.0	1,680	840	3,360	2,910	2,380	1,680
7/8	20.0	1,980	990	3,960	3,430	2,800	1,980
1"	26.0	2,480	1,240	4,960	4,300	3,510	2,480
1 1/16	29.0	2,850	1,430	5,700	4,940	4,030	2,850
1 1/8	34.0	3,270	1,640	6,540	5,660	4,620	3,270
1 1/4	40.0	3,710	1,860	7,420	6,430	5,250	3,710
1 5/16	45.0	4,260	2,130	8,520	7,380	6,020	4,260
1 1/2	55.0	5,250	2,630	10,500	9,090	7,420	5,250
1 5/8	68.0	6,440	3,220	12,900	11,200	9,110	6,440
1 3/4	83.0	7,720	3,860	15,400	13,400	10,900	7,720
2"	95.0	9,110	4,560	18,200	15,800	12,900	9,110
2 1/8	109.0	10,500	5,250	21,000	18,200	14,800	10,500
2 1/4	129.0	12,400	6,200	24,800	21,500	17,500	12,400
2 1/2	149.0	13,900	6,950	27,800	24,100	19,700	13,900
2 5/8	168.0	16,000	8,000	32,000	27,700	22,600	16,000

See Figures D-4 and D-5 for sling configuration description.

TABLE D-17: Part 2—Endless Sling

Rope Diameter Nominal in Inches	Nominal Weight per 100 ft. in Pounds	ENDLESS SLING					
				BASKET HITCH			
				Angle of Rope to Horizontal			
				90°	60°	45°	30°
				Angle of Rope to Vertical			
		Vertical Hitch	Choker Hitch	0°	30°	45°	60°
1/2	6.5	1,140	570	2,290	1,980	1,620	1,140
9/16	8.3	1,420	710	2,840	2,460	2,010	1,420
5/8	10.5	1,850	925	3,710	3,210	2,620	1,850
3/4	14.5	2,540	1,270	5,080	4,400	3,590	2,540
13/16	17.0	3,020	1,510	6,050	5,240	4,280	3,020
7/8	20.0	3,560	1,780	7,130	6,170	5,040	3,560
1"	26.0	4,460	2,230	8,930	7,730	6,310	4,460
1 1/16	29.0	5,130	2,570	10,300	8,890	7,260	5,130
1 1/8	34.0	5,890	2,940	11,800	10,200	8,330	5,890
1 1/4	40.0	6,680	3,340	13,400	11,600	9,450	6,680
1 5/16	45.0	7,670	3,830	15,300	13,300	10,800	7,670
1 1/2	55.0	9,450	4,730	18,900	16,400	13,400	9,450
1 5/8	68.0	11,600	5,800	23,200	20,100	16,400	11,600
1 3/4	83.0	13,900	6,950	27,800	24,100	19,700	13,900
2"	95.0	16,400	8,200	32,800	28,400	23,200	16,400
2 1/8	109.0	18,900	9,450	37,800	32,700	26,700	18,900
2 1/4	129.0	22,300	11,200	44,600	38,700	31,600	22,300
2 1/2	149.0	25,000	12,500	50,000	43,300	35,400	25,000
2 5/8	168.0	28,800	14,400	57,600	49,900	40,700	28,800

See Figures D-4 and D-5 for sling configuration description.

TABLE D-18: Part 2—Endless Sling

Rope Diameter Nominal in Inches	Nominal Weight per 100 ft. in Pounds	ENDLESS SLING					
				BASKET HITCH			
				Angle of Rope to Horizontal			
				90°	60°	45°	30°
				Angle of Rope to Vertical			
		Vertical Hitch	Choker Hitch	0°	30°	45°	60°
1/2	8.0	1,140	570	2,290	1,980	1,620	1,140
9/16	10.2	1,420	710	2,840	2,460	2,010	1,420
5/8	13.0	1,780	890	3,570	3,090	2,520	1,780
3/4	17.5	2,230	1,120	4,470	3,870	3,160	2,230
13/16	21.0	2,770	1,390	5,540	4,800	3,920	2,770
7/8	25.0	3,200	1,600	6,410	5,550	4,530	3,200
1"	30.5	3,920	1,960	7,850	6,800	5,550	3,920
1 1/16	34.5	4,550	2,280	9,110	7,990	6,440	4,550
1 1/8	40.0	5,260	2,630	10,500	9,100	7,440	5,260
1 1/4	46.3	5,920	2,960	11,800	10,300	8,380	5,920
1 5/16	52.5	6,680	3,340	13,400	11,600	9,450	6,680
1 1/2	66.8	8,330	4,170	16,700	14,400	11,800	8,330
1 5/8	82.0	10,200	5,080	20,300	17,600	14,400	10,200
1 3/4	98.0	12,100	6,040	24,200	20,900	17,100	12,100
2"	118.0	14,300	7,130	28,500	24,700	20,200	14,300
2 1/8	135.0	16,400	8,200	32,800	28,400	23,200	16,400
2 1/4	157.0	19,100	9,540	38,200	33,100	27,000	19,100
2 1/2	181.0	21,800	10,900	43,600	37,700	30,800	21,800
2 5/8	205.0	24,500	12,200	49,000	42,400	34,600	24,500

See Figures D-4 and D-5 for sling configuration description.

TABLE D-18

POLYESTER ROPE SLINGS

TABLE D-18: Part 1—Eye and Eye Sling

Rope Diameter Nominal in Inches	Nominal Weight per 100 ft. in Pounds	EYE & EYE SLING					
				BASKET HITCH			
				Angle of Rope to Horizontal			
				90°	60°	45°	30°
				Angle of Rope to Vertical			
		Vertical Hitch	Choker Hitch	0°	30°	45°	60°
1/2	8.0	635	320	1,270	1,100	900	635
9/16	10.2	790	395	1,580	1,370	1,120	790
5/8	13.0	990	495	1,980	1,710	1,400	990
3/4	17.5	1,240	620	2,480	2,150	1,750	1,240
13/16	21.0	1,540	770	3,080	2,670	2,180	1,540
7/8	25.0	1,780	890	3,560	3,080	2,520	1,780
1"	30.5	2,180	1,090	4,360	3,780	3,080	2,180
1 1/16	34.5	2,530	1,270	5,060	4,380	3,580	2,530
1 1/8	40.0	2,920	1,460	5,840	5,060	4,130	2,920
1 1/4	46.3	3,290	1,650	6,580	5,700	4,650	3,290
1 5/16	52.5	3,710	1,860	7,420	6,430	5,250	3,710
1 1/2	66.8	4,630	2,320	9,260	8,020	6,550	4,630
1 5/8	82.0	5,640	2,820	11,300	9,770	7,980	5,640
1 3/4	98.0	6,710	3,360	13,400	11,600	9,490	6,710
2"	118.0	7,920	3,960	15,800	13,700	11,200	7,920
2 1/8	135.0	9,110	4,460	18,200	15,800	12,900	9,110
2 1/4	157.0	10,600	5,300	21,200	18,400	15,000	10,600
2 1/2	181.0	12,100	6,050	24,200	21,000	17,100	12,100
2 5/8	205.0	13,600	6,800	27,200	23,600	19,200	13,600

See Figures D-4 and D-5 for sling configuration description.

TABLE D-19

POLYPROPYLENE ROPE SLINGS

TABLE D-19: Part 1—Eye and Eye Sling

Rope Diameter Nominal in Inches	Nominal Weight per 100 ft. in Pounds	EYE & EYE SLING					
				BASKET HITCH			
				Angle of Rope to Horizontal			
				90°	60°	45°	30°
				Angle of Rope to Vertical			
		Vertical Hitch	Choker Hitch	0°	30°	45°	60°
1/2	4.7	645	325	1,290	1,120	910	645
9/16	6.1	780	390	1,560	1,350	1,100	780
5/8	7.5	950	475	1,900	1,650	1,340	950
3/4	10.7	1,300	650	2,600	2,250	1,840	1,300
13/16	12.7	1,520	760	3,040	2,630	2,150	1,520
7/8	15.0	1,760	880	3,520	3,050	2,490	1,760
1"	18.0	2,140	1,070	4,280	3,700	3,030	2,140
1 1/16	20.4	2,450	1,230	4,900	4,240	3,460	2,450
1 1/8	23.7	2,800	1,400	5,600	4,850	3,960	2,800
1 1/4	27.0	3,210	1,610	6,420	5,560	4,540	3,210
1 5/16	30.5	3,600	1,800	7,200	6,240	5,090	3,600
1 1/2	38.5	4,540	2,270	9,080	7,860	6,420	4,540
1 5/8	47.5	5,510	2,760	11,000	9,540	7,790	5,510
1 3/4	57.0	6,580	3,290	13,200	11,400	9,300	6,580
2"	69.0	7,960	3,980	15,900	13,800	11,300	7,960
2 1/8	80.0	9,330	4,670	18,700	16,200	13,200	9,330
2 1/4	92.0	10,600	5,300	21,200	18,400	15,000	10,600
2 1/2	107.0	12,200	6,100	24,400	21,100	17,300	12,200
2 5/8	120.0	13,800	6,900	27,600	23,900	19,600	13,800

See Figures D-4 and D-5 for sling configuration description.

TABLE D-19: Part 2—Endless Sling

Rope Diameter Nominal in Inches	Nominal Weight per 100 ft. in Pounds	ENDLESS SLING					
				BASKET HITCH			
				Angle of Rope to Horizontal			
				90°	60°	45°	30°
				Angle of Rope to Vertical			
		Vertical Hitch	Choker Hitch	0°	30°	45°	60°
1/2	4.7	1,160	580	2,320	2,010	1,640	1,160
9/16	6.1	1,400	700	2,810	2,430	1,990	1,400
5/8	7.5	1,710	855	3,420	2,960	2,420	1,710
3/4	10.7	2,340	1,170	4,680	4,050	3,310	2,340
13/16	12.7	2,740	1,370	5,470	4,740	3,870	2,740
7/8	15.0	3,170	1,580	6,340	5,490	4,480	3,170
1"	18.0	3,850	1,930	7,700	6,670	5,450	3,860
1 1/16	20.4	4,410	2,210	8,820	7,640	6,240	4,410
1 1/8	23.7	5,040	2,520	10,100	8,730	7,130	5,040
1 1/4	27.0	5,780	2,890	11,600	10,000	8,170	5,780
1 5/16	30.5	6,480	3,240	13,000	11,200	9,170	6,480
1 1/2	38.5	8,170	4,090	16,300	14,200	11,600	8,170
1 5/8	47.5	9,920	4,960	19,800	17,200	14,000	9,920
1 3/4	57.0	11,800	5,920	23,700	20,500	16,800	11,800
2"	69.0	14,300	7,160	28,700	24,800	20,300	14,300
2 1/8	80.0	16,800	8,400	33,600	29,100	23,800	16,800
2 1/4	92.0	19,100	9,540	38,200	33,100	27,000	19,100
2 1/2	107.0	22,000	11,000	43,900	38,000	31,100	22,000
2 5/8	120.0	24,800	12,400	49,700	43,000	35,100	24,800

See Figures D-4 and D-5 for sling configuration description.

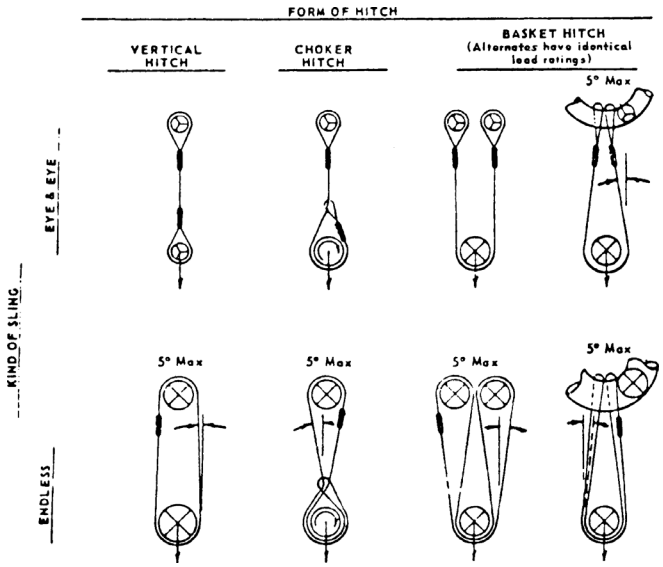

Notes: Angles of 5° or less from the vertical may be considered vertical angles.
For slings with legs more than 5° off vertical, the actual angle as shown in Figure D-5 must be considered.

EXPLANATION OF SYMBOLS: Minimum diameter of curvature

Represents a contact surface which shall have a diameter of curvature at least double the diameter of the rope.

Represents a contact surface which shall have a diameter of curvature at least 8 times the diameter of the rope.

Represents a load in a choker hitch and illustration the rotary force on the load and/or the slippage of the rope in contact with the load. Diameter of curvature of load surface shall be at least double the diameter of the rope.

Figure D-4

Basic Sling Configurations with Vertical Legs

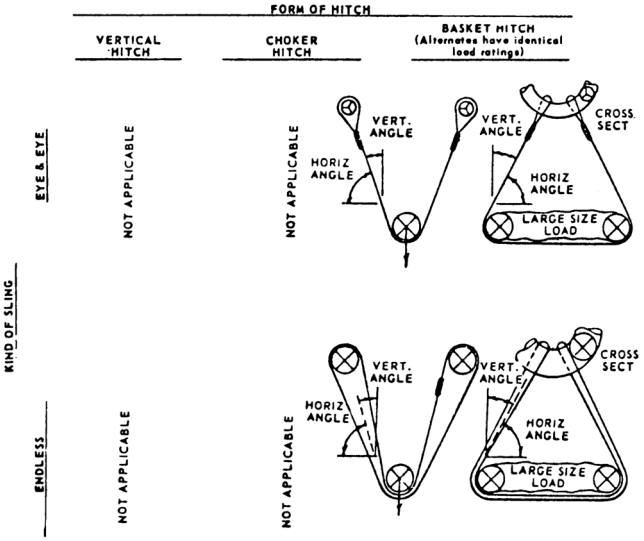

Notes: For vertical angles of 5° or less, refer to Figure D-4 "basic sling configuration with vertical legs."

See Figure D-4 for explanation of symbols.

Figure D-5

Sling Configurations with Angled Legs

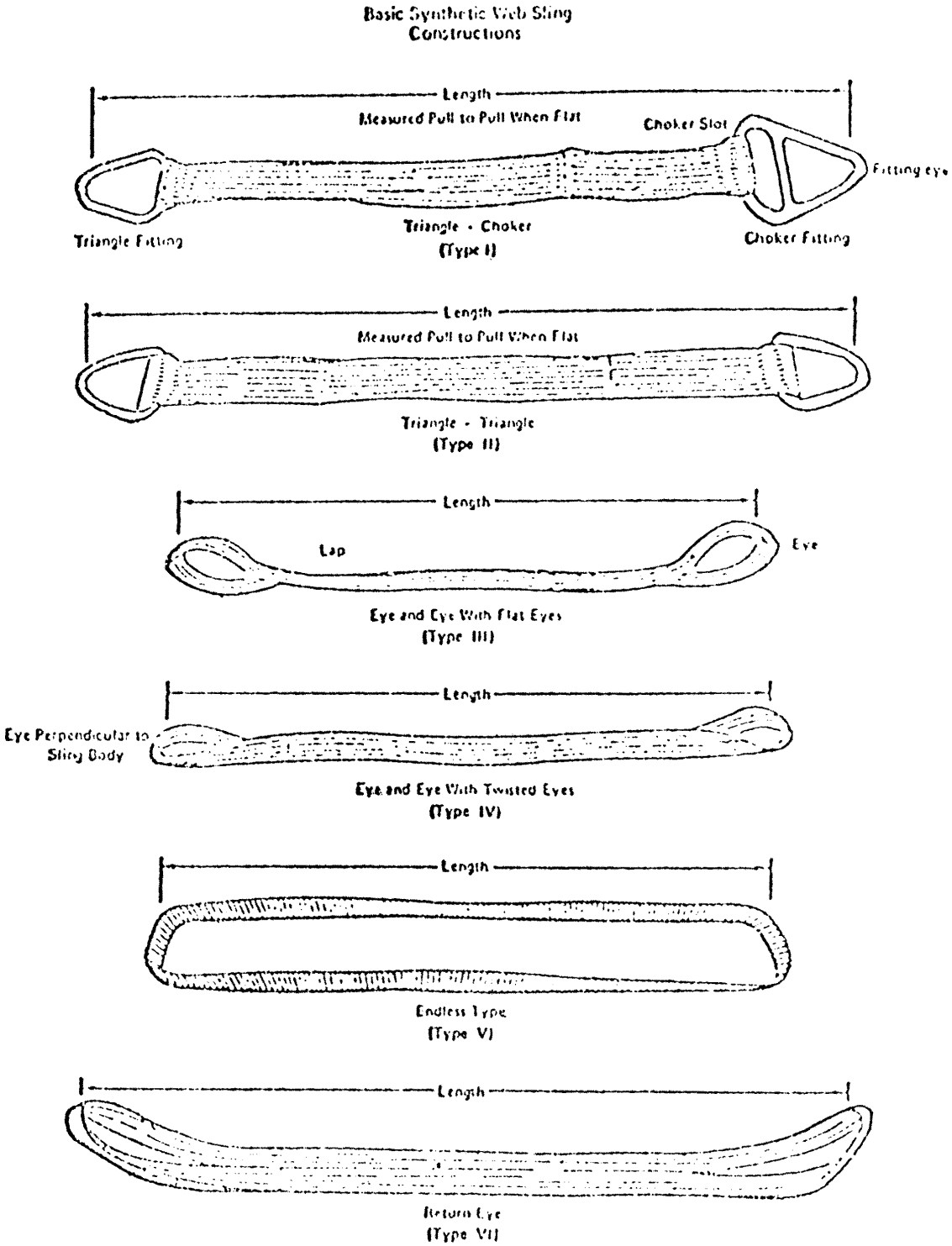

Figure D-6

Basic Synthetic Web Sling Constructions

TABLE D-20

RATED CAPACITY IN POUNDS SYNTHETIC WEB SLINGS 1,000 LBS. PER INCH OF WIDTH SINGLE PLY

(TABLE D-20: Part 1—Types I, II, III, and IV)

Sling Body Width, Inches	Triangle - Choker Slings, Type I Triangle - Triangle Slings, Type II Eye & Eye with Flat Eye Slings, Type III Eye & Eye with Twisted Eye Slings, Type IV					
	Vert.	Choker	Vert. Basket	30° Basket	45° Basket	60° Basket
1	1,000	750	2,000	1,700	1,400	1,000
2	2,000	1,500	4,000	3,500	2,800	2,000
3	3,000	2,200	6,000	5,200	4,200	3,000
4	4,000	3,000	8,000	6,900	5,700	4,000
5	5,000	3,700	10,000	8,700	7,100	5,000
6	6,000	4,500	12,000	10,400	8,500	6,000

Notes: 1. All angles shown are measured from the vertical.
2. Capacities for intermediate widths not shown may be obtained by interpolation.

(TABLE D-20: Part 2—Type V)

Sling Body Width, Inches	Endless Slings, Type V					
	Vert.	Choker	Vert. Basket	30° Basket	45° Basket	60° Basket
1	1,600	1,300	3,200	2,800	2,300	1,600
2	3,200	2,600	6,400	5,500	4,500	3,200
3	4,800	3,800	9,600	8,300	6,800	4,800
4	6,400	5,100	12,800	11,100	9,000	6,400
5	8,000	6,400	16,000	13,900	11,300	8,000
6	9,600	7,700	19,200	16,600	13,600	9,600

Notes: 1. All angles shown are measured from the vertical.
2. Capacities for intermediate widths not shown may be obtained by interpolation.

(TABLE D-20: Part 3—Type VI)

Sling Body Width, Inches	Return Eye Slings, Type VI					
	Vert.	Choker	Vert. Basket	30° Basket	45° Basket	60° Basket
1	800	650	1,600	1,400	1,150	800
2	1,600	1,300	3,200	2,800	2,300	1,600
3	2,400	1,950	4,800	4,150	3,400	2,400
4	3,200	2,600	6,400	5,500	4,500	3,200
5	4,000	3,250	8,000	6,900	5,650	4,000
6	4,800	3,800	9,600	8,300	6,800	4,800

Notes: 1. All angles shown are measured from the vertical.
2. Capacities for intermediate widths not shown may be obtained by interpolation.

TABLE D-21

RATED CAPACITY IN POUNDS SYNTHETIC WEB SLINGS 1,200 LBS. PER INCH OF WIDTH SINGLE PLY

(TABLE D-21: Part 1—Types I, II, III, and IV)

Sling Body Width, Inches	Triangle - Choker Slings, Type I Triangle - Triangle Slings, Type II Eye & Eye with Flat Eye Slings, Type III Eye & Eye with Twisted Eye Slings, Type IV					
	Vert.	Choker	Vert. Basket	30° Basket	45° Basket	60° Basket
1	1,200	900	2,400	2,100	1,700	1,200
2	2,400	1,800	4,800	4,200	3,400	2,400
3	3,600	2,700	7,200	6,200	5,100	3,600
4	4,800	3,600	9,600	8,300	6,800	4,800
5	6,000	4,500	12,000	10,400	8,500	6,000
6	7,200	5,400	14,400	12,500	10,200	7,200

Notes: 1. All angles shown are measured from the vertical.
2. Capacities for intermediate widths not shown may be obtained by interpolation.

(TABLE D-21: Part 2—Type V)

Sling Body Width, Inches	Endless Slings, Type V					
	Vert.	Choker	Vert. Basket	30° Basket	45° Basket	60° Basket
1	1,900	1,500	3,800	3,300	2,700	1,900
2	3,800	3,000	7,600	6,600	5,400	3,800
3	5,800	4,600	11,600	10,000	8,200	5,800
4	7,700	6,200	15,400	13,300	10,900	7,700
5	9,600	7,700	19,200	16,600	13,600	9,600
6	11,500	9,200	23,000	19,900	16,300	11,500

Notes: 1. All angles shown are measured from the vertical.
2. Capacities for intermediate widths not shown may be obtained by interpolation.

(TABLE D-21: Part 3—Type VI)

Sling Body Width, Inches	Return Eye Slings, Type VI					
	Vert.	Choker	Vert. Basket	30° Basket	45° Basket	60° Basket
1	950	750	1,900	1,650	1,350	950
2	1,900	1,500	3,800	3,300	2,700	1,900
3	2,850	2,250	5,700	4,950	4,050	2,850
4	3,800	3,000	7,600	6,600	5,400	3,800
5	4,750	3,750	9,500	8,250	6,750	4,750
6	5,800	4,600	11,600	10,000	8,200	5,800

Notes: 1. All angles shown are measured from the vertical.
2. Capacities for intermediate widths not shown may be obtained by interpolation.

TABLE D-22

RATED CAPACITY IN POUNDS SYNTHETIC WEB SLINGS 1,600 LBS. PER INCH OF WIDTH SINGLE PLY

(TABLE D-22: Part 1—Types I, II, III, and IV)

Sling Body Width, Inches	Triangle - Choker Slings, Type I Triangle - Triangle Slings, Type II Eye & Eye with Flat Eye Slings, Type III Eye & Eye with Twisted Eye Slings, Type IV					
	Vert.	Choker	Vert. Basket	30° Basket	45° Basket	60° Basket
1	1,600	1,200	3,200	2,800	2,300	1,600
2	3,200	2,400	6,400	5,500	4,500	3,200
3	4,800	3,600	9,600	8,300	6,800	4,800
4	6,400	4,800	12,800	11,100	9,000	6,400
5	8,000	6,000	16,000	13,800	11,300	8,000
6	9,600	7,200	19,200	16,600	13,600	9,600

Notes: 1. All angles shown are measured from the vertical.
2. Capacities for intermediate widths not shown may be obtained by interpolation.

Sling Body Width, Inches	Endless Slings, Type V					
	Vert.	Choker	Vert. Basket	30° Basket	45° Basket	60° Basket
1	2,600	2,100	5,200	4,500	3,700	2,600
2	5,100	4,100	10,200	8,800	7,200	5,100
3	7,700	6,200	15,400	13,300	10,900	7,700
4	10,100	8,200	20,400	17,700	14,400	10,200
5	12,800	10,200	25,600	22,200	18,100	12,800
6	15,400	12,300	30,800	26,700	21,800	15,400

Notes: 1. All angles shown are measured from the vertical.
2. Capacities for intermediate widths not shown may be obtained by interpolation.

(TABLE D-22: Part 3—Type VI)

Sling Body Width, Inches	Return Eye Slings, Type VI					
	Vert.	Choker	Vert. Basket	30° Basket	45° Basket	60° Basket
1	1,050	1,050	2,600	2,250	1,850	1,300
2	2,600	2,100	5,200	4,500	3,700	2,600
3	3,900	3,150	7,800	6,750	5,500	3,900
4	5,100	4,100	10,200	8,800	7,200	5,100
5	6,400	5,150	12,800	11,050	9,050	6,400
6	7,700	6,200	15,400	13,300	10,900	7,700

Notes: 1. All angles shown are measured from the vertical.
2. Capacities for intermediate widths not shown may be obtained by interpolation.

[Order 76-6, § 296-24-29431, filed 3/1/76.]

PART E
HAZARDOUS MATERIALS, FLAMMABLE AND COMBUSTIBLE LIQUIDS, SPRAY FINISHING

Hazardous Materials

WAC 296-24-295 Compressed gases (general requirements).

[Order 73-5, § 296-24-295, filed 5/9/73 and Order 73-4, § 296-24-295, filed 5/7/73.]

WAC 296-24-29501 Inspection of compressed gas cylinders. Each employer shall determine that compressed gas cylinders under the employer's control are in a safe condition to the extent that this can be determined by visual inspection. Visual and other inspections shall be conducted as prescribed in the hazardous materials regulations of the department of transportation (49 CFR Parts 171-179 and 14 CFR Part 103). Where those regulations are not applicable, visual and other inspections shall be conducted in accordance with Compressed Gas Association Pamphlets C-6-1968 and C-8-1962.

[Statutory Authority: Chapter 49.17 RCW. 94-15-096 (Order 94-07), § 296-24-29501, filed 7/20/94, effective 9/20/94; Order 73-5, § 296-24-29501, filed 5/9/73 and Order 73-4, § 296-24-29501, filed 5/7/73.]

WAC 296-24-29503 Compressed gases. The in-plant handling, storage, and utilization of all compressed gases in cylinders, portable tanks, rail tankcars, or motor vehicle cargo tanks shall be in accordance with Compressed Gas Association Pamphlet P-1-1965.

[Order 73-5, § 296-24-29503, filed 5/9/73 and Order 73-4, § 296-24-29503, filed 5/7/73.]

WAC 296-24-29505 Safety relief devices for compressed gas containers. Compressed gas cylinders, portable tanks, and cargo tanks shall have pressure relief devices installed and maintained in accordance with Compressed Gas Association Pamphlets S-1.1-1963 and 1965 addenda and S-1.2-1963.

[Order 73-5, § 296-24-29505, filed 5/9/73 and Order 73-4, § 296-24-29505, filed 5/7/73.]

WAC 296-24-310 Acetylene.

[Order 73-5, § 296-24-310, filed 5/9/73 and Order 73-4, § 296-24-310, filed 5/7/73.]

WAC 296-24-31001 Cylinders. Employers must ensure that the in-plant transfer, handling, storage, and use of acetylene in cylinders comply with the provisions of CGA Pamphlet G-1-2003 (Acetylene) (Compressed Gas Association, Inc., 11th ed., 2003).

[Statutory Authority: RCW 49.17.010, 49.17.040, 49.17.050, 49.17.060, and chapter 49.17 RCW. 10-09-089, § 296-24-31001, filed 4/20/10, effective 7/1/10; Order 73-5, § 296-24-31001, filed 5/9/73 and Order 73-4, § 296-24-31001, filed 5/7/73.]

WAC 296-24-31003 Piped systems. (1) Employers must comply with Chapter 9 (Acetylene Piping) of NFPA 51A-2006 (Standard for Acetylene Charging Plants) (National Fire Protection Association, 2006 ed., 2006).

(2) When employers can demonstrate that the facilities, equipment, structures, or installations used to generate acetylene or to charge (fill) acetylene cylinders were installed prior to February 16, 2006, these employers may comply with the provisions of Chapter 7 (Acetylene Piping) of NFPA 51A-2001 (Standard for Acetylene Charging Plants) (National Fire Protection Association, 2001 ed., 2001).

(3) The provisions of subsection (2) of this section also apply when the facilities, equipment, structures, or installations used to generate acetylene or to charge (fill) acetylene cylinders were approved for construction or installation prior to February 16, 2006, but constructed and installed on or after that date.

Note: For additional information on acetylene piping systems, see CGA G-1.2-2006, Part 3 (Acetylene Piping) (Compressed Gas Association, Inc., 3rd ed., 2006).

[Statutory Authority: RCW 49.17.010, 49.17.040, 49.17.050, 49.17.060, and chapter 49.17 RCW. 10-09-089, § 296-24-31003, filed 4/20/10, effective 7/1/10; Order 73-5, § 296-24-31003, filed 5/9/73 and Order 73-4, § 296-24-31003, filed 5/7/73.]

WAC 296-24-31005 Generators and filling cylinders. (1) Employers must ensure that facilities, equipment, structures, or installations used to generate acetylene or to charge (fill) acetylene cylinders comply with the provisions of NFPA 51A-2006 (Standard for Acetylene Charging Plants) (National Fire Protection Association, 2006 ed., 2006).

(2) When employers can demonstrate that the facilities, equipment, structures, or installations used to generate acetylene or to charge (fill) acetylene cylinders were constructed or installed prior to February 16, 2006, these employers may comply with the provisions of NFPA 51A-2001 (Standard for Acetylene Charging Plants) (National Fire Protection Association, 2001 ed., 2001).

(3) The provisions of subsection (2) of this section also apply when the facilities, equipment, structures, or installations were approved for construction or installation prior to February 16, 2006, but constructed and installed on or after that date.

[Statutory Authority: RCW 49.17.010, 49.17.040, 49.17.050, 49.17.060, and chapter 49.17 RCW. 10-09-089, § 296-24-31005, filed 4/20/10, effective 7/1/10; Order 73-5, § 296-24-31005, filed 5/9/73 and Order 73-4, § 296-24-31005, filed 5/7/73.]

WAC 296-24-315 Hydrogen.

[Order 73-5, § 296-24-315, filed 5/9/73 and Order 73-4, § 296-24-315, filed 5/7/73.]

WAC 296-24-31501 General. (1) Definitions as used in this section.

(a) Gaseous hydrogen system is one in which the hydrogen is delivered, stored and discharged in the gaseous form to consumer's piping. The system includes stationary or movable containers, pressure regulators, safety relief devices, manifolds, interconnecting piping and controls. The system terminates at the point where hydrogen at service pressure first enters the consumer's distribution piping.

(b) Approved—Means unless otherwise indicated, listed or approved by a nationally recognized testing laboratory. Refer to federal regulation 29 CFR 1910.7 for definition of nationally recognized testing laboratory.

(c) Listed—See "approved."

(d) ASME—American Society of Mechanical Engineers.

(e) DOT specifications—Regulations of the department of transportation published in 49 CFR Chapter I.

(f) DOT regulations—See WAC 296-24-315.

(2) Scope.

(a) Gaseous hydrogen systems.

(i) WAC 296-24-31503 applies to the installation of gaseous hydrogen systems on consumer premises where the hydrogen supply to the consumer premises originates outside the consumer premises and is delivered by mobile equipment.

(ii) WAC 296-24-31503 does not apply to gaseous hydrogen systems having a total hydrogen content of less than four hundred cubic feet, nor to hydrogen manufacturing plants or other establishments operated by the hydrogen supplier or their agent for the purpose of storing hydrogen and refilling portable containers, trailers, mobile supply trucks, or tank cars.

(b) Liquefied hydrogen systems.

(i) WAC 296-24-31505 applies to the installation of liquefied hydrogen systems on consumer premises.

(ii) WAC 296-24-31505 does not apply to liquefied hydrogen portable containers of less than one hundred fifty liters (39.63 gallons) capacity; nor to liquefied hydrogen manufacturing plants or other establishments operated by the hydrogen supplier or supplier's agent for the sole purpose of storing liquefied hydrogen and refilling portable containers, trailers, mobile supply trucks or tank cars.

[Statutory Authority: Chapter 49.17 RCW. 94-15-096 (Order 94-07), § 296-24-31501, filed 7/20/94, effective 9/20/94; 88-23-054 (Order 88-25), § 296-24-31501, filed 11/14/88; Order 73-5, § 296-24-31501, filed 5/9/73 and Order 73-4, § 296-24-31501, filed 5/7/73.]

WAC 296-24-31503 Gaseous hydrogen systems. (1) Design.

(a) Containers.

(i) Hydrogen containers shall comply with one of the following:

(A) Designed, constructed, and tested in accordance with appropriate requirements of ASME Boiler and Pressure Vessel Code, Section VIII—Unfired Pressure Vessels—1968.

(B) Designed, constructed, tested and maintained in accordance with U.S. Department of Transportation specifications and regulations.

(ii) Permanently installed containers shall be provided with substantial noncombustible supports on firm noncombustible foundations.

(iii) Each portable container shall be legibly marked with the name "hydrogen" in accordance with "marking compressed gas containers to identify the material contained" ANSI Z48.1-1954. Each manifolded hydrogen supply unit shall be legibly marked with the name hydrogen or a legend such as "this unit contains hydrogen."

(b) Safety relief devices.

(i) Hydrogen containers shall be equipped with safety relief devices as required by the ASME Boiler and Pressure Vessel Code, Section VIII Unfired Pressure Vessels, 1968 or the DOT specifications and regulations under which the container is fabricated.

(ii) Safety relief devices shall be arranged to discharge upward and unobstructed to the open air in such a manner as to prevent any impingement of escaping gas upon the container, adjacent structure of personnel. This requirement does not apply to DOT specification containers having an internal volume of 2 cubic feet or less.

(iii) Safety relief devices or vent piping shall be designed or located so that moisture cannot collect and freeze in a manner which would interfere with proper operation of the device.

(c) Piping, tubing, and fittings.

(i) Piping, tubing, and fittings shall be suitable for hydrogen service and for the pressures and temperatures involved. Case iron pipe and fittings shall not be used.

(ii) Piping and tubing shall conform to Section 2—"Industrial Gas and Air Piping"—Code for Pressure Piping, ANSI B31.1-1967 with addenda B31.1-1969.

(iii) Joints in piping and tubing may be made by welding or brazing or by use of flanged, threaded, socket, or compression fittings. Gaskets and thread sealants shall be suitable for hydrogen service.

(d) Equipment assembly.

(i) Valves, gauges, regulators, and other accessories shall be suitable for hydrogen service.

(ii) Installation of hydrogen systems shall be supervised by personnel familiar with proper practices with reference to their construction and use.

(iii) Storage containers, piping, valves, regulating equipment, and other accessories shall be readily accessible, and shall be protected against physical damage and against tampering.

(iv) Cabinets or housings containing hydrogen control or operating equipment shall be adequately ventilated.

(v) Each mobile hydrogen supply unit used as part of a hydrogen system shall be adequately secured to prevent movement.

(vi) Mobile hydrogen supply units shall be electrically bonded to the system before discharging hydrogen.

(e) Marking. The hydrogen storage location shall be permanently placarded as follows: "HYDROGEN—FLAMMABLE GAS—NO SMOKING—NO OPEN FLAMES," or equivalent.

(f) Testing. After installations, all piping, tubing, and fittings shall be tested and proved hydrogen gas tight at maximum operating pressure.

(2) Location.

(a) General.

(i) The system shall be located so that it is readily accessible to delivery equipment and to authorized personnel.

(ii) Systems shall be located above ground.

(iii) Systems shall not be located beneath electric power lines.

(iv) Systems shall not be located close to flammable liquid piping or piping of other flammable gases.

(v) Systems near aboveground flammable liquid storage shall be located on ground higher than the flammable liquid storage except when dikes, diversion curbs, grading, or separating solid walls are used to prevent accumulation of flammable liquids under the system.

(b) Specific requirements.

(i) The location of a system, as determined by the maximum total contained volume of hydrogen, shall be in the order of preference as indicated by Roman numerals in Table H-1.

TABLE H-1

Nature of location	Size of hydrogen system		
	Less than 3,000 CF	3,000 CF to 15,000 CF	In excess of 15,000 CF
Outdoors	I	I	I.
In a separate building	II	II	II.
In a special room	III	III	Not permitted.
Inside buildings not in a special room and exposed to other occupancies	IV	Not permitted.	Not permitted.

(ii) The minimum distance in feet from a hydrogen system of indicated capacity located outdoors, in separate buildings or in special rooms to any specified outdoor exposure shall be in accordance with Table H-2.

(iii) The distances in Table H-2 Items 1, 14, and 3 to 10 inclusive do not apply where protective structures such as adequate fire walls are located between the system and the exposure.

(iv) Hydrogen systems of less than 3,000 CF when located inside buildings and exposed to other occupancies shall be situated in the building so that the system will be as follows:

(A) In an adequately ventilated area as in (3)(b)(ii) of this section.

(B) Twenty feet from stored flammable materials or oxidizing gases.

(C) Twenty-five feet from open flames, ordinary electrical equipment or other sources of ignition.

(D) Twenty-five feet from concentrations of people.

(E) Fifty feet from intakes of ventilation or air-conditioning equipment and air compressors.

(F) Fifty feet from other flammable gas storage.

(G) Protected against damage or injury due to falling objects or working activity in the area.

(H) More than one system of 3,000 CF or less may be installed in the same room, provided the systems are separated by at least 50 feet. Each such system shall meet all of the requirements of this section.

(3) Design consideration at specific locations.

(a) Outdoor locations.

(i) Where protective walls or roofs are provided, they shall be constructed of noncombustible materials.

(ii) Where the enclosing sides adjoin each other, the area shall be properly ventilated.

(iii) Electrical equipment shall meet the requirements for Class I, Division 2 hazardous locations of WAC 296-24-95613.

(b) Separate buildings.

(i) Separate buildings shall be built of at least noncombustible construction. Windows and doors shall be located so as to be readily accessible in case of emergency. Windows shall be of glass or plastic in metal frames.

(ii) Adequate ventilation to the outdoors shall be provided. Inlet openings shall be located near the floor in exterior walls only. Outlet openings shall be located at the high point of the room in exterior walls or roof. Inlet and outlet openings shall each have minimum total area of one square foot per 1,000 cubic feet of room volume. Discharge from outlet openings shall be directed or conducted to a safe location.

(iii) Explosion venting shall be provided in exterior walls or roof only. The venting area shall be equal to not less than 1 square foot per 30 cubic feet of room volume and may consist of any one or any combination of the following: Walls of light noncombustible material, preferably single thickness, single strength glass; lightly fastened hatch covers; lightly fastened swinging doors in exterior walls opening outward; lightly fastened walls or roof designed to relieve at a maximum pressure of 25 pounds per square foot.

(iv) There shall be no sources of ignition from open flames, electrical equipment, or heating equipment.

(v) Electrical equipment shall meet the requirements of chapter 296-24 WAC Part L.

(vi) Heating, if provided, shall be by steam, hot water, or other indirect means.

(c) Special rooms.

(i) Floor, walls, and ceiling shall have a fire-resistance rating of at least 2 hours. Walls or partitions shall be continuous from floor to ceiling and shall be securely anchored. At least one wall shall be an exterior wall. Openings to other parts of the building shall not be permitted. Windows and doors shall be in exterior walls and shall be located so as to be readily accessible in case of emergency. Windows shall be of glass or plastic in metal frames.

(ii) Ventilation shall be as provided in (3)(b)(ii) of this section.

(iii) Explosion venting shall be as provided in (3)(b)(iii) of this section.

(iv) There shall be no sources of ignition from open flames, electrical equipment or heating equipment.

(v) Electrical equipment shall meet the requirements of chapter 296-24 WAC Part L.

(vi) Heating, if provided, shall be by steam, hot water, or indirect means.

(4) Operating instructions. For installations which require any operation of equipment by the user, legible instructions shall be maintained at operating locations.

(5) Maintenance.

(a) The equipment and functioning of each charged gaseous hydrogen system shall be maintained in a safe operating

condition in accordance with the requirements of this section. The area within 15 feet of any hydrogen container shall be kept free of dry vegetation and combustible material.

TABLE H-2

Type of outdoor exposure		Size of hydrogen system: Less than 3,000 CF	3,000 CF to 15,000 CF	In excess of 15,000 CF
1. Building or structure	Wood frame construction*	- 10	25	50
	Heavy timber, noncombustible or ordinary construction*	- 0	10	**25
	Fire-resistive construction*	- 0	0	0
2. Wall openings	- Not above any part of a system	10	10	10
	Above any part of a system	25	25	25
3. Flammable liquids above ground	0 to 1,000 gallons	- 10	25	25
	In excess of 1,000 gallons	- 25	50	50
4. Flammable liquids below ground—0 to 1,000 gallons	- Tank	- 10	10	10
	Vent or fill opening of tank	25	25	25
5. Flammable liquids below ground—in excess of 1,000 gallons	- Tank	- 20	20	20
	Vent or fill opening of tank	25	25	25
6. Flammable gas storage, either high pressure or low pressure	0 to 15,000 CF capacity	- 10	25	25
	In excess of 15,000 CF capacity	25	50	50
7. Oxygen storage	- 12,000 CF or less	- Refer to NFPA No. 51, gas systems for welding and cutting (1969).		
	More than 12,000 CF	- Refer to NFPA No. 566, bulk oxygen systems at consumer sites (1969).		
8. Fast burning solids such as ordinary lumber, excelsior or paper		50	50	25
9. Slow burning solids such as heavy timber or coal		25	25	25
10. Open flames and other sources of ignition		25	25	50
11. Air compressor intakes or inlets to ventilating or air-condition equipment		50	50	50
12. Concentration of people***		25	50	50
13. Public sidewalks		15	15	15
14. Line of adjoining property which may be built upon		5	5	5

* Refer to NFPA No. 220 standard types of building construction for definitions of various types of construction. (1969 Ed.)

** But not less than one-half the height of adjacent side wall of the structure.

*** In congested areas such as offices, lunchrooms, locker rooms, time-clock areas, and places of public assembly.

[Statutory Authority: Chapter 49.17 RCW. 91-24-017 (Order 91-07), § 296-24-31503, filed 11/22/91, effective 12/24/91; 88-23-054 (Order 88-25), § 296-24-31503, filed 11/14/88. Statutory Authority: RCW 49.17.040 and 49.17.050. 85-10-004 (Order 85-09), § 296-24-31503, filed 4/19/85; Order 76-6, § 296-24-31503, filed 3/1/76; Order 73-5, § 296-24-31503, filed 5/9/73 and Order 73-4, § 296-24-31503, filed 5/7/73.]

WAC 296-24-31505 Liquefied hydrogen systems. (1) Design.

(a) Containers.

(i) Hydrogen containers shall comply with the following: Storage containers shall be designed, constructed, and tested in accordance with appropriate requirements of the ASME Boiler and Pressure Vessel Code, Section VIII—Unfired Pressure Vessels (1968) or applicable provisions of API Standard 620, Recommended Rules for Design and Construction of Large, Welded, Low-Pressure Storage Tanks, Second Edition (June 1963) and Appendix R (April 1965).

(ii) Portable containers shall be designed, constructed and tested in accordance with DOT specifications and regulations.

(b) Supports. Permanently installed containers shall be provided with substantial noncombustible supports securely anchored on firm noncombustible foundations. Steel supports in excess of 18 inches in height shall be protected with a protective coating having a 2-hour fire-resistance rating.

(c) Marking. Each container shall be legibly marked to indicate "LIQUEFIED HYDROGEN—FLAMMABLE GAS."

(d) Safety relief devices.

(i) Stationary liquefied hydrogen containers shall be equipped with safety relief devices sized in accordance with CGA Pamphlet S-1-1966, Part 3, Safety Relief Device Standards for Compressed Gas Storage Containers.

(A) Portable liquefied hydrogen containers complying with the U.S. Department of Transportation regulations shall be equipped with safety relief devices as required in the U.S. Department of Transportation specifications and regulations. Safety relief devices shall be sized in accordance with the requirements of CGA Pamphlet S-1-1966, Safety Relief Device Standards, Part 1, Compressed Gas Cylinders and Part 2, Cargo and Portable Tank Containers.

(ii) Safety relief devices shall be arranged to discharge unobstructed to the outdoors and in such a manner as to prevent impingement of escaping liquid or gas upon the container, adjacent structures or personnel. See (2)(a)(vi) of this section for venting of safety relief devices in special locations.

(iii) Safety relief devices or vent piping shall be designed or located so that moisture cannot collect and freeze in a manner which would interfere with proper operation of the device.

(iv) Safety relief devices shall be provided in piping wherever liquefied hydrogen could be trapped between closures

(e) Piping, tubing, and fittings.

(i) Piping, tubing, and fittings and gasket and thread sealants shall be suitable for hydrogen service at the pressures and temperatures involved. Consideration shall be given to the thermal expansion and contraction of piping systems when exposed to temperature fluctuations of ambient to liquefied hydrogen temperatures.

(ii) Gaseous hydrogen piping and tubing (above—20°F) shall conform to the applicable sections of Pressure Piping Section 2—Industrial Gas and Air Piping, ANSI B31.1-1967 with addenda B31.1-1969. Design of liquefied hydrogen or cold (-20°F or below) gas piping shall use Petroleum Refinery Piping ANSI B31.3-1966 or Refrigeration Piping ANSI B31.5-1966 with addenda B31.5a-1968 as a guide.

(iii) Joints in piping and tubing shall preferably be made by welding or brazing; flanged, threaded, socket, or suitable compression fittings may be used.

(iv) Means shall be provided to minimize exposure of personnel to piping operating at low temperatures and to prevent air condensate from contacting piping, structural members, and surfaces not suitable for cryogenic temperatures. Only those insulating materials which are rated nonburning in accordance with ASTM Procedures D1692-68 may be used. Other protective means may be used to protect personnel. The insulation shall be designed to have a vapor-tight seal in the outer covering to prevent the condensation of air and subsequent oxygen enrichment within the insulation. The insulation material and outside shield shall also be of adequate design to prevent attrition of the insulation due to normal operating conditions.

(v) Uninsulated piping and equipment which operate at liquefied-hydrogen temperature shall not be installed above asphalt surfaces or other combustible materials in order to prevent contact of liquid air with such materials. Drip pans may be installed under uninsulated piping and equipment to retain and vaporize condensed liquid air.

(f) Equipment assembly.

(i) Valves, gauges, regulators, and other accessories shall be suitable for liquefied hydrogen service and for the pressures and temperatures involved.

(ii) Installation of liquefied hydrogen systems shall be supervised by personnel familiar with proper practices and with reference to their construction and use.

(iii) Storage containers, piping, valves, regulating equipment, and other accessories shall be readily accessible and shall be protected against physical damage and against tampering. A shutoff valve shall be located in liquid product withdrawal lines as close to the container as practical. On containers of over 2,000 gallons capacity, this shutoff valve shall be of the remote control type with no connections, flanges, or other appurtenances (other than a welded manual shutoff valve) allowed in the piping between the shutoff valve and its connection to the inner container.

(iv) Cabinets or housings containing hydrogen control equipment shall be ventilated to prevent any accumulation of hydrogen gas.

(g) Testing.

(i) After installation, all field-erected piping shall be tested and proved hydrogen gas-tight at operating pressure and temperature.

(ii) Containers if out of service in excess of 1 year shall be inspected and tested as outlined in (1) of this section. The safety relief devices shall be checked to determine if they are operable and properly set.

(h) Liquefied hydrogen vaporizers.

(i) The vaporizer shall be anchored and its connecting piping shall be sufficiently flexible to provide for the effect of expansion and contraction due to temperature changes.

(ii) The vaporizer and its piping shall be adequately protected on the hydrogen and heating media sections with safety relief devices.

(iii) Heat used in a liquefied hydrogen vaporizer shall be indirectly supplied utilizing media such as air, steam, water, or water solutions.

(iv) A low temperature shutoff switch shall be provided in the vaporizer discharge piping to prevent flow of liquefied hydrogen in the event of the loss of the heat source.

(i) Electrical systems.

(i) Electrical wiring and equipment located within 3 feet of a point where connections are regularly made and disconnected, shall meet the requirements of chapter 296-24 WAC Part L for Class I, Division 1 locations.

(ii) Except as provided in (l) of this section, electrical wiring, and equipment located within 25 feet of a point where connections are regularly made and disconnected or within 25 feet of a liquid hydrogen storage container, shall meet the requirements of chapter 296-24 WAC Part L for Class I, Division 2 locations. When equipment approved for Class I, environments is not commercially available, the equipment may be:

(A) Purged or ventilated in accordance with NFPA No. 496-1967, Standard for Purged Enclosures for Electrical Equipment in Hazardous Locations,

(B) Intrinsically safe, or

(C) Approved for Class I, Group C atmospheres. This requirement does not apply to electrical equipment which is installed on mobile supply trucks or tank cars from which the storage container is filled.

(j) Bonding and grounding. The liquefied hydrogen container and associated piping shall be electrically bonded and grounded.

(2) Location of liquefied hydrogen storage.

(a) General requirements.

(i) The storage containers shall be located so that they are readily accessible to mobile supply equipment at ground level and to authorized personnel.

(ii) The containers shall not be exposed by electric power lines, flammable liquid lines, flammable gas lines, or lines carrying oxidizing materials.

(iii) When locating liquefied hydrogen storage containers near above-ground flammable liquid storage or liquid oxygen storage, locate the liquefied hydrogen container on ground higher than flammable liquid storage or liquid oxygen storage.

(iv) Where it is necessary to locate the liquefied hydrogen container on ground that is level with or lower than adjacent flammable liquid storage or liquid oxygen storage, suitable protective means shall be taken (such as by diking, diversion, curbs, grading), with respect to the adjacent flammable liquid storage or liquid oxygen storage, to prevent accumulation of liquids within 50 feet of the liquefied hydrogen container.

(v) Storage sites shall be fenced and posted to prevent entrance by unauthorized personnel. Sites shall also be placarded as follows: "Liquefied hydrogen—Flammable gas—No smoking—No open flames."

(vi) If liquefied hydrogen is located in (as specified in Table H-3) a separate building, in a special room, or inside buildings when not in a special room and exposed to other occupancies, containers shall have the safety relief devices vented unobstructed to the outdoors at a minimum elevation of 25 feet above grade to a safe location as required in (l)(d)(ii) of this section.

(b) Specific requirements.

(i) The location of liquefied hydrogen storage, as determined by the maximum total quantity of liquefied hydrogen, shall be in the order of preference as indicated by Roman numerals in the following Table H-3.

TABLE H-3

MAXIMUM TOTAL QUANTITY OF LIQUEFIED HYDROGEN STORAGE PERMITTED

Nature of location	Size of hydrogen storage (capacity in gallons)			
	39.63 (150 liters) to 50	51 to 300	301 to 600	In excess of 600
Outdoors	I	I	I	I
In a separate building	II	II	II	Not permitted.
In a special room	III	III	Not permitted	Not permitted.
Inside buildings not in a special room and exposed to other occupancies	IV	No permitted	Not permitted	Not permitted.

Note: This table does not apply to the storage in dewars of the type generally used in laboratories for experimental purposes.

(ii) The minimum distance in feet from liquefied hydrogen systems of indicated storage capacity located outdoors, in a separate building, or in a special room to any specified exposure shall be in accordance with Table H-4.

TABLE H-4

MINIMUM DISTANCE (FEET) FROM LIQUEFIED HYDROGEN SYSTEMS TO EXPOSURE

Type of exposure	Liquefied hydrogen storage (capacity in gallons)		
	39.63 (150 liters) to 3,500	3,501 to 15,000	15,001 to 30,000
1. Fire-resistive building and fire walls*	5	5	5
2. Noncombustible building*	25	50	75
3. Other buildings*	50	75	100
4. Wall openings, air-compressor intakes, inlets for air-conditioning or ventilating equipment	75	75	75
5. Flammable liquids (above ground and vent or fill openings if below ground) (see 513 and 514)	50	75	100
6. Between stationary liquefied hydrogen containers	5	5	5
7. Flammable gas storage	50	75	100
8. Liquid oxygen storage and other oxidizers (see 513 and 514)	100	100	100
9. Combustible solids	50	75	100
10. Open flames, smoking, and welding	50	50	50
11. Concentrations of people**	75	75	75
12. Public ways, railroads, and property lines	25	50	75

* Refer to standard types of building construction, NFPA No. 220-1969 for definitions of various types of construction.

** In congested areas such as offices, lunchrooms, locker rooms, time-clock areas, and places of public assembly.

Note 1: The distance in Nos. 2, 3, 5, 7, 9, and 12 in Table H-4 may be reduced where protective structures,such as firewalls equal to height of top of the container, to safeguard the liquefied hydrogen storage system, are located between the liquefied hydrogen storage installation and the exposure.

Note 2: Where protective structures are provided, ventilation and confinement of product should be considered. The 5-foot distance in Nos. 1 and 6 facilitates maintenance and enhances ventilation.

(c) Handling of liquefied hydrogen inside buildings other than separate buildings and special rooms. Portable liquefied hydrogen containers of 50 gallons or less capacity as permitted in Table H-3 and in compliance with (2)(a)(vi) of this section when housed inside buildings not located in a special room and exposed to other occupancies shall comply with the following minimum requirements:

(i) Be located 20 feet from flammable liquids and readily combustible materials such as excelsior or paper.

(ii) Be located 25 feet from ordinary electrical equipment and other sources of ignition including process or analytical equipment.

(iii) Be located 25 feet from concentrations of people.

(iv) Be located 50 feet from intakes of ventilation and air-conditioning equipment or intakes of compressors.

(v) Be located 50 feet from storage of other flammable-gases or storage of oxidizing gases.

(vi) Containers shall be protected against damage or injury due to falling objects or work activity in the area.

(vii) Containers shall be firmly secured and stored in an upright position.

(viii) Welding or cutting operations, and smoking shall be prohibited while hydrogen is in the room.

(ix) The area shall be adequately ventilated. Safety relief devices on the containers shall be vented directly outdoors or to a suitable hood. See (1)(d)(ii) of this section and (2)(a)(vi) of this section.

(3) Design considerations at specific locations.

(a) Outdoor locations.

(i) Outdoor location shall mean outside of any building or structure, and includes locations under a weather shelter or canopy provided such locations are not enclosed by more than two walls set at right angles and are provided with vent-space between the walls and vented roof or canopy.

(ii) Roadways and yard surfaces located below liquefied hydrogen piping, from which liquid air may drop, shall be constructed of noncombustible materials.

(iii) If protective walls are provided, they shall be constructed of noncombustible materials and in accordance with the provisions of (3)(a)(i) of this section as applicable.

(iv) Electrical wiring and equipment shall comply with chapter 296-24 WAC Part L.

(v) Adequate lighting shall be provided for nighttime transfer operation.

(b) Separate buildings.

(i) Separate buildings shall be of light noncombustible construction on a substantial frame. Walls and roofs shall be lightly fastened and designed to relieve at a maximum internal pressure of 25 pounds per square foot. Windows shall be of shatterproof glass or plastic in metal frames. Doors shall be located in such a manner that they will be readily accessible to personnel in an emergency.

(ii) Adequate ventilation to the outdoors shall be provided. Inlet openings shall be located near the floor level in exterior walls only. Outlet openings shall be located at the high point of the room in exterior walls or roof. Both the inlet and outlet vent openings shall have a minimum total area of 1 square foot per 1,000 cubic feet of room volume. Discharge from outlet openings shall be directed or conducted to a safe location.

(iii) There shall be no sources of ignition.

(iv) Electrical wiring and equipment shall comply with chapter 296-24 WAC Part L.

(v) Heating, if provided, shall be by steam, hot water, or other indirect means.

(c) Special rooms.

(i) Floors, walls, and ceilings shall have a fire resistance rating of at least 2 hours. Walls or partitions shall be continuous from floor to ceiling and shall be securely anchored. At least one wall shall be an exterior wall. Openings to other parts of the building shall not be permitted. Windows and doors shall be in exterior walls and doors shall be located in such a manner that they will be accessible in an emergency. Windows shall be of shatterproof glass or plastic in metal frames.

(ii) Ventilation shall be as provided in (3)(b)(ii) of this section.

(iii) Explosion venting shall be provided in exterior walls or roof only. The venting area shall be equal to not less than 1 square foot per 30 cubic feet of room volume and may consist of any one or any combination of the following: Walls of light noncombustible material; lightly fastened hatch covers; lightly fastened swinging doors opening outward in exterior walls; lightly fastened walls or roofs designed to relieve at a maximum pressure of 25 pounds per square foot.

(iv) There shall be no sources of ignition.

(v) Electrical wiring and equipment shall comply with chapter 296-24 WAC Part L.

(vi) Heating, if provided, shall be steam, hot water, or by other indirect means.

(4) Operating instructions.

(a) Written instructions. For installation which require any operation of equipment by the user, legible instructions shall be maintained at operating locations.

(b) Attendant. A qualified person shall be in attendance at all times while the mobile hydrogen supply unit is being unloaded.

(c) Security. Each mobile liquefied hydrogen supply unit used as part of a hydrogen system shall be adequately secured to prevent movement.

(d) Grounding. The mobile liquefied hydrogen supply unit shall be grounded for static electricity.

(5) Maintenance.

(a) The equipment and functioning of each charged liquefied hydrogen system shall be maintained in a safe operating condition in accordance with the requirements of this section. Weeds or similar combustibles shall not be permitted within 25 feet of any liquified hydrogen equipment.

[Statutory Authority: Chapter 49.17 RCW. 91-24-017 (Order 91-07), § 296-24-31505, filed 11/22/91, effective 12/24/91; 88-23-054 (Order 88-25), § 296-24-31505, filed 11/14/88. Statutory Authority: RCW 49.17.040 and 49.17.050. 85-10-004 (Order 85-09), § 296-24-31505, filed 4/19/85; Order 76-6, § 296-24-31505, filed 3/1/76; Order 73-5, § 296-24-31505, filed 5/9/73 and Order 73-4, § 296-24-31505, filed 5/7/73.]

WAC 296-24-320 Oxygen.

[Order 73-5, § 296-24-320, filed 5/9/73 and Order 73-4, § 296-24-320, filed 5/7/73.]

WAC 296-24-32001 Scope. This section applies to the installation of bulk oxygen systems on industrial and institutional consumer premises. This section does not apply to oxygen manufacturing plants or other establishments operated by the oxygen supplier or supplier's agent for the purpose of storing oxygen and refilling portable containers, trailers, mobile supply trucks, or tank cars, nor to systems having capacities less than those stated in WAC 296-24-32003(1).

[Statutory Authority: Chapter 49.17 RCW. 94-15-096 (Order 94-07), § 296-24-32001, filed 7/20/94, effective 9/20/94; Order 73-5, § 296-24-32001, filed 5/9/73 and Order 73-4, § 296-24-32001, filed 5/7/73.]

WAC 296-24-32003 Bulk oxygen systems. (1) Definitions. As used in this section: A bulk oxygen system is an assembly of equipment, such as oxygen storage containers, pressure regulators, safety devices, vaporizers, manifolds, and interconnecting piping, which has storage capacity of more than 13,000 cubic feet of oxygen, normal temperature and pressure (NTP), connected in service or ready for service,

or more than 25,000 cubic feet of oxygen (NTP) including unconnected reserves on hand at the site. The bulk oxygen system terminates at the point where oxygen at service pressure first enters the supply line. The oxygen containers may be stationary or movable, and the oxygen may be stored as gas or liquid.

(2) Location.

(a) General. Bulk oxygen storage systems shall be located above ground out of doors, or shall be installed in a building of noncombustible construction, adequately vented, and used for that purpose exclusively. The location selected shall be such that containers and associated equipment shall not be exposed by electric power lines, flammable or combustible liquid lines, or flammable gas lines.

(b) Accessibility. The system shall be located so that it is readily accessible to mobile supply equipment at ground level and to authorized personnel.

(c) Leakage. Where oxygen is stored as a liquid, noncombustible surfacing shall be provided in an area in which any leakage of liquid oxygen might fall during operation of the system and filling of a storage container. For purposes of these standards, asphaltic or bituminous paving is considered to be combustible.

(d) Elevation. When locating bulk oxygen systems near above ground flammable or combustible liquid storage which may be either indoors or outdoors, it is advisable to locate the system on ground higher than the flammable or combustible liquid storage.

(e) Dikes. Where it is necessary to locate a bulk oxygen system on ground lower than adjacent flammable or combustible liquid storage suitable means shall be taken (such as by diking, diversion curbs, or grading) with respect to the adjacent flammable or combustible liquid storage to prevent accumulation of liquids under the bulk oxygen system.

(3) Distance between systems and exposures.

(a) General. The minimum distance from any bulk oxygen storage container to exposures, measured in the most direct line except as indicated in (3)(f) and (g) of this section shall be as indicated in (3)(b) to (r) of this section inclusive.

(b) Combustible structures. Fifty feet from any combustible structures.

(c) Fire resistive structures. Twenty-five feet from any structures with fire-resistive exterior walls or sprinklered buildings or other construction, but not less than one-half the height of adjacent side wall of the structure.

(d) Openings. At least 10 feet from any opening in adjacent walls of fire resistive structures. Spacing from such structures shall be adequate to permit maintenance, but shall not be less than 1 foot.

(e) Flammable liquid storage above ground.

Distance (feet)	Capacity (gallons)
50	0-1000
90	1001 or more

(f) Flammable liquid storage below ground.

Distance measured horizontally from oxygen storage container to flammable liquid tank (feet)	Distance from oxygen storage container to filling and vent connections or openings to flammable liquid tank (feet)	Capacity gallons
15	50	0-1000
30	50	1001 or more

(g) Combustible liquid storage above ground.

Distance (feet)	Capacity (gallons)
25	0-1000
50	1001 or more

(h) Combustible liquid storage below ground.

Distance measured horizontally from oxygen storage container to combustible liquid tank (feet)	Distance from oxygen storage container to filling and vent connections or openings to combustible liquid tank (feet)
15	40

(i) Flammable gas storage. (Such as compressed flammable gases, liquefied flammable gases and flammable gases in low pressure gas holders):

Distance (feet)	Capacity (cu. ft. NTP)
50	Less than 5000
90	5000 or more

(j) Highly combustible materials. Fifty feet from solid materials which burn rapidly, such as excelsior or paper.

(k) Slow-burning materials. Twenty-five feet from solid materials which burn slowly, such as coal and heavy timber.

(l) Ventilation. Seventy-five feet in one direction and 35 feet in approximately 90° direction from confining walls (not including firewalls less than 20 feet high) to provide adequate ventilation in courtyards and similar confining areas.

(m) Congested areas. Twenty-five feet from congested areas such as offices, lunchrooms, locker rooms, time clock areas, and similar locations where people may congregate.

(n) Public areas. Fifty feet from places of public assembly.

(o) Patients. Fifty feet from areas occupied by nonambulatory patients.

(p) Sidewalks. Ten feet from any public sidewalk.

(q) Adjacent property. Five feet from any line of adjoining property.

(r) Exceptions. The distances in (3)(b), (c), (e) to (k) inclusive, and (p) and (q) of this section do not apply where protective structures such as firewalls of adequate height to safeguard the oxygen storage systems are located between the bulk oxygen storage installation and the exposure. In such cases, the bulk oxygen storage installation may be a minimum distance of 1 foot from the firewall.

(4) Storage containers.

(a) Foundations and supports. Permanently installed containers shall be provided with substantial noncombustible supports on firm noncombustible foundations.

(b) Construction—Liquid. Liquid oxygen storage containers shall be fabricated from materials meeting the impact test requirements of paragraph UG-84 of ASME Boiler and Pressure Vessel Code, Section VIII—Unfired Pressure Vessels—1968. Containers operating at pressures above 15 pounds per square inch gage (p.s.i.g.) shall be designed, constructed, and tested in accordance with appropriate requirements of ASME Boiler and Pressure Vessel Code, Section VII—Unfired Pressure Vessels—1968. Insulation surrounding the liquid oxygen container shall be noncombustible.

(c) Construction—Gaseous. High-pressure gaseous oxygen containers shall comply with one of the following:

(i) Designed, constructed, and tested in accordance with appropriate requirements of ASME Boiler and Pressure Vessel Code, Section VIII—Unfired Pressure Vessels—1968.

(ii) Designed, constructed, tested, and maintained in accordance with DOT specifications and regulations.

(5) Piping, tubing, and fittings.

(a) Selection. Piping, tubing, and fittings shall be suitable for oxygen service and for the pressures and temperatures involved.

(b) Specification. Piping and tubing shall conform to Section 2—Gas and Air Piping Systems of Code for Pressure Piping, ANSI, B31.1-1967 with addenda B31.10a-1969.

(c) Fabrication. Piping or tubing for operating temperatures below -20°F shall be fabricated from materials meeting the impact test requirements of paragraph UG-84 of ASME Boiler and Pressure Vessel Code, Section VIII—Unfired Pressure Vessels—1968, when tested at the minimum operating temperature to which the piping may be subjected in service.

(6) Safety relief devices.

(a) General. Bulk oxygen storage containers, regardless of design pressure shall be equipped with safety relief devices as required by the ASME code or the DOT specifications and regulations.

(b) DOT containers. Bulk oxygen storage containers designed and constructed in accordance with DOT specification shall be equipped with safety relief devices as required thereby.

(c) ASME containers. Bulk oxygen storage containers designed and constructed in accordance with the ASME Boiler and Pressure Vessel Code, Section VIII—Unfired Pressure Vessel—1968 shall be equipped with safety relief devices meeting the provisions of the Compressed Gas Association Pamphlet "Safety Relief Device Standards for Compressed Gas Storage Containers," S-1, Part 3.

(d) Insulation. Insulation casings on liquid oxygen containers shall be equipped with suitable safety relief devices.

(e) Reliability. All safety relief devices shall be so designed or located that moisture cannot collect and freeze in a manner which would interfere with proper operation of the device.

(7) Liquid oxygen vaporizers.

(a) Mounts and couplings. The vaporizer shall be anchored and its connecting piping be sufficiently flexible to provide for the effect of expansion and contraction due to temperature changes.

(b) Relief devices. The vaporizer and its piping shall be adequately protected on the oxygen and heating medium sections with safety relief devices.

(c) Heating. Heat used in an oxygen vaporizer shall be indirectly supplied only through media such as steam, air, water, or water solutions which do not react with oxygen.

(d) Grounding. If electric heaters are used to provide the primary source of heat, the vaporizing system shall be electrically grounded.

(8) Equipment assembly and installation.

(a) Cleaning. Equipment making up a bulk oxygen system shall be cleaned in order to remove oil, grease or other readily oxidizable materials before placing the system in service.

(b) Joints. Joints in piping and tubing may be made by welding or by use of flanged, threaded, slip, or compression fittings. Gaskets or thread sealants shall be suitable for oxygen service.

(c) Accessories. Valves, gages, regulators, and other accessories shall be suitable for oxygen service.

(d) Installation. Installation of bulk oxygen systems shall be supervised by personnel familiar with proper practices with reference to their construction and use.

(e) Testing. After installation all field erected piping shall be tested and proved gas tight at maximum operating pressure. Any medium used for testing shall be oil free and nonflammable.

(f) Security. Storage containers, piping, valves, regulating equipment, and other accessories shall be protected against physical damage and against tampering.

(g) Venting. Any enclosure containing oxygen control or operating equipment shall be adequately vented.

(h) Placarding. The bulk oxygen storage location shall be permanently placarded to indicate: "OXYGEN—NO SMOKING—NO OPEN FLAMES," or an equivalent warning.

(i) Electrical wiring. Bulk oxygen installations are not hazardous locations as defined and covered by chapter 296-24 WAC Part L. Therefore, general purpose or weatherproof types of electrical wiring and equipment are acceptable depending upon whether the installation is indoors or outdoors. Such equipment shall be installed according to chapter 296-24 WAC Part L.

(9) Operating instructions. For installations which require any operation of equipment by the user, legible instructions shall be maintained at operating locations.

(10) Maintenance.

(a) The equipment and functioning of each charged bulk oxygen system shall be maintained in a safe operating condition in accordance with the requirements of this section. Wood and long dry grass shall be cut back within 15 feet of any bulk oxygen storage container.

[Statutory Authority: Chapter 49.17 RCW. 91-24-017 (Order 91-07), § 296-24-32003, filed 11/22/91, effective 12/24/91. Statutory Authority: RCW 49.17.040 and 49.17.050. 85-10-004 (Order 85-09), § 296-24-32003, filed 4/19/85; Order 76-6, § 296-24-32003, filed 3/1/76; Order 73-5, § 296-24-32003, filed 5/9/73 and Order 73-4, § 296-24-32003, filed 5/7/73.]

WAC 296-24-325 Nitrous oxide. The piped systems for the in-plant transfer and distribution of nitrous oxide shall

be designed, installed, maintained, and operated in accordance with Compressed Gas Association Pamphlet G8.1-1964.

[Order 73-5, § 296-24-325, filed 5/9/73 and Order 73-4, § 296-24-325, filed 5/7/73.]

WAC 296-24-330 Flammable and combustible liquids.

[Order 73-5, § 296-24-330, filed 5/9/73 and Order 73-4, § 296-24-330, filed 5/7/73.]

WAC 296-24-33001 Definitions. The following definitions are applicable to all sections of this chapter which include WAC 296-24-330 in the section number.

(1) Aerosol shall mean a material which is dispensed from its container as a mist, spray, or foam by a propellant under pressure.

(2) Atmospheric tank shall mean a storage tank which has been designed to operate at pressures from atmospheric through 0.5 p.s.i.g.

(3) Automotive service station shall mean that portion of property where flammable or combustible liquids used as motor fuels are stored and dispensed from fixed equipment into the fuel tanks of motor vehicles and shall include any facilities available for the sale and service of tires, batteries, and accessories, and for minor automotive maintenance work. Major automotive repairs, painting, body and fender work are excluded.

(4) Basement shall mean a story of a building or structure having one-half or more of its height below ground level and to which access for firefighting purposes is unduly restricted.

(5) Boiling point shall mean the boiling point of a liquid at a pressure of 14.7 pounds per square inch absolute (p.s.i.a.) (760 mm.). Where an accurate boiling point is unavailable for the material in question, or for mixtures which do not have a constant boiling point, for purposes of this section the ten percent point of a distillation performed in accordance with the Standard Method of Test for Distillation of Petroleum Products, ASTM D-86-62, may be used as the boiling point of the liquid.

(6) Boilover shall mean the expulsion of crude oil (or certain other liquids) from a burning tank. The light fractions of the crude oil burnoff producing a heat wave in the residue, which on reaching a water strata may result in the expulsion of a portion of the contents of the tank in the form of froth.

(7) Bulk plant shall mean that portion of a property where flammable or combustible liquids are received by tank vessel, pipelines, tank car, or tank vehicle, and are stored or blended in bulk for the purpose of distributing such liquids by tank vessel, pipeline, tank car, tank vehicle, or container.

(8) Chemical plant shall mean a large integrated plant or that portion of such a plant other than a refinery or distillery where flammable or combustible liquids are produced by chemical reactions or used in chemical reactions.

(9) Closed container shall mean a container as herein defined, so sealed by means of a lid or other device that neither liquid nor vapor will escape from it at ordinary temperatures.

(10) Crude petroleum shall mean hydrocarbon mixtures that have a flash point below 150°F and which have not been processed in a refinery.

(11) Distillery shall mean a plant or that portion of a plant where flammable or combustible liquids produced by fermentation are concentrated, and where the concentrated products may also be mixed, stored, or packaged.

(12) Fire area shall mean an area of a building separated from the remainder of the building by construction having a fire resistance of at least one hour and having all communicating openings properly protected by an assembly having a fire resistance rating of at least one hour.

(13) Fire resistance or fire resistive construction shall mean construction to resist the spread of fire.

(14) Flammable aerosol shall mean an aerosol which is required to be labeled "Flammable" under the Federal Hazardous Substances Labeling Act (15 U.S.C. 1261). For the purposes of WAC 296-24-33009, such aerosols are considered Class IA liquids.

(15) "Flashpoint" means the minimum temperature at which a liquid gives off vapor within a test vessel in sufficient concentration to form an ignitable mixture with air near the surface of the liquid, and shall be determined as follows:

(a) For a liquid which has a viscosity of less than 45 SUS at 100°F (37.8°C), does not contain suspended solids, and does not have a tendency to form a surface film while under test, the procedure specified in the Standard Method of Test for Flashpoint by Tag Closed Tester (ASTM D-56-70) shall be used.

(b) For a liquid which has a viscosity of 45 SUS or more at 100°F (37.8°C), or contains suspended solids, or has a tendency to form a surface film while under test, the Standard Method of Test for Flashpoint by Pensky-Martens Closed Tester (ASTM D-93-71) shall be used, except that the methods specified in Note 1 to section 1.1 of ASTM D-93-71 may be used for the respective materials specified in the note.

(c) For a liquid that is a mixture of compounds that have different volatilities and flashpoints, its flashpoint shall be determined by using the procedure specified in (a) or (b) of this subsection on the liquid in the form it is shipped. If the flashpoint, as determined by this test, is 100°F (37.8°C) or higher, an additional flashpoint determination shall be run on a sample of the liquid evaporated to ninety percent of its original volume, and the lower value of the two tests shall be considered the flashpoint of the material.

(d) Organic peroxides, which undergo autoaccelerating thermal decomposition, are excluded from any of the flashpoint determination methods specified in this section.

(16) Hotel shall mean buildings or groups of buildings under the same management in which there are sleeping accommodations for hire primarily used by transients who are lodged with or without meals including but not limited to inns, clubs, motels, and apartment hotels.

(17) Institutional occupancy shall mean the occupancy or use of a building or structure or any portion thereof by persons harbored or detained to receive medical, charitable or other care or treatment, or by persons involuntarily detained.

(18) Liquid shall mean, for the purpose of these standards, any material which has a fluidity greater than that of 300 penetration asphalt when tested in accordance with

ASTM Test for Penetration for Bituminous Materials, D-5-65. When not otherwise identified, the term liquid shall include both flammable and combustible liquids.

(19) "Combustible liquid" means any liquid having a flashpoint at or above 100°F (37.8°C). Combustible liquids shall be divided into two classes as follows:

(a) "Class II liquids" shall include those with flashpoints at or above 100°F (37.8°C) and below 140°F (60°C), except any mixture having components with flashpoints of 200°F (93.3°C) or higher, the volume of which make up ninety-nine percent or more of the total volume of the mixture.

(b) "Class III liquids" shall include those with flashpoints at or above 140°F (60°C). Class III liquids are subdivided into two subclasses:

(i) "Class IIIA liquids" shall include those with flashpoints at or above 140°F (60°C) and below 200°F (93.3°C) except any mixture having components with flashpoints of 200°F (93.3°C) or higher, the total volume of which make up ninety-nine percent or more of the total volume of the mixture.

(ii) "Class IIIB liquids" shall include those with flashpoints at or above 200°F (93.3°C). This section does not cover Class IIIB liquids. Where the term "Class III liquids" is used in this section, it shall mean only Class IIIA liquids.

(c) When a combustible liquid is heated for use to within 30°F (16.7°C) of its flashpoint, it shall be handled in accordance with the requirements for the next lower class of liquids.

(20) "Flammable liquid" means any liquid having a flashpoint below 100°F (37.8°C), except any mixture having components with flashpoints of 100°F (37.8°C), or higher, the total of which make up ninety-nine percent or more of the total volume of the mixture. Flammable liquids shall be known as Class I liquids. Class I liquids are divided into three classes as follows:

(a) Class IA shall include liquids having flashpoints below 73°F (22.8°C) and having a boiling point below 100°F (37.8°C).

(b) Class IB shall include liquids having flashpoints below 73°F (22.8°C) and having a boiling point at or above 100°F (37.8° C).

(c) Class IC shall include liquids having flashpoints at or above 73°F (22.8°C) and below 100°F (37.8°C).

(21) Unstable (reactive) liquid shall mean a liquid which in the pure state or as commercially produced or transported will vigorously polymerize, decompose, condense, or will become self-reactive under conditions of shocks, pressure, or temperature.

(22) Low-pressure tank shall mean a storage tank which has been designed to operate at pressures above 0.5 p.s.i.g. but not more than 15 p.s.i.g.

(23) Marine service station shall mean that portion of a property where flammable or combustible liquids used as fuels are stored and dispensed from fixed equipment on shore, piers, wharves, or floating docks into the fuel tanks or self-propelled craft, and shall include all facilities used in connection therewith.

(24) Mercantile occupancy shall mean the occupancy or use of a building or structure or any portion thereof for the displaying, selling, or buying of goods, wares, or merchandise.

(25) Office occupancy shall mean the occupancy or use of a building or structure or any portion thereof for the transaction of business, or the rendering or receiving of professional services.

(26) Portable tank shall mean a closed container having a liquid capacity over sixty United States gallons and not intended for fixed installation.

(27) Pressure vessel shall mean a storage tank or vessel which has been designed to operate at pressures above 15 p.s.i.g.

(28) Protection for exposure shall mean adequate fire protection for structures on property adjacent to tanks, where there are employees of the establishment.

(29) Refinery shall mean a plant in which flammable or combustible liquids are produced on a commercial scale from crude petroleum, natural gasoline, or other hydrocarbon sources.

(30) Safety can shall mean an approved container, of not more than five gallons capacity, having a spring-closing lid and spout cover and so designed that it will safely relieve internal pressure when subjected to fire exposure.

(31) Vapor pressure shall mean the pressure, measured in pounds per square inch (absolute) exerted by a volatile liquid as determined by the "Standard Method of Test for Vapor Pressure of Petroleum Products (Reid Method)," American Society for Testing and Materials ASTM D323-68.

(32) Ventilation as specified in these standards is for the prevention of fire and explosion. It is considered adequate if it is sufficient to prevent accumulation of significant quantities of vapor-air mixtures in concentration over one-fourth of the lower flammable limit.

(33) Storage: Flammable or combustible liquids shall be stored in a tank or in a container that complies with WAC 296-24-33009(2).

(34) Barrel shall mean a volume of forty-two United States gallons.

(35) Container shall mean any can, barrel, or drum.

(36) Approved unless otherwise indicated, approved, or listed by a nationally recognized testing laboratory. Refer to federal regulation 29 CFR 1910.7 for definition of nationally recognized testing laboratory.

(37) Listed see subsection (36) of this section.

(38) "SUS" means Saybolt Universal Seconds as determined by the Standard Method of Test for Saybolt Viscosity (ASTM D-88-56), and may be determined by use of the SUS conversion tables specified in ASTM Method D2161-66 following determination of viscosity in accordance with the procedures specified in the Standard Method of Test for Viscosity of Transparent and Opaque Liquids (ASTM D445-65).

(39) "Viscous" means a viscosity of 45 SUS or more.

Note: The volatility of liquids is increased when artificially heated to temperatures equal to or higher than their flashpoints. When so heated Class II and III liquids shall be subject to the applicable requirements for Class I or II liquids. These standards may also be applied to high flashpoint liquids when so heated even though these same liquids when not heated are outside of its scope.

[Statutory Authority: Chapter 49.17 RCW. 88-23-054 (Order 88-25), § 296-24-33001, filed 11/14/88. Statutory Authority: RCW 49.17.040 and 49.17.050. 82-08-026 (Order 82-10), § 296-24-33001, filed 3/30/82. Statu-

tory Authority: RCW 49.17.040, 49.17.050, 49.17.240, chapters 43.22 and 42.30 RCW. 80-17-015 (Order 80-21), § 296-24-33001, filed 11/13/80; Order 76-29, § 296-24-33001, filed 9/30/76; Order 76-6, § 296-24-33001, filed 3/1/76; Order 74-27, § 296-24-33001, filed 5/7/74; Order 73-5, § 296-24-33001, filed 5/9/73 and Order 73-4, § 296-24-33001, filed 5/7/73.]

WAC 296-24-33003 Scope. This section applies to the handling, storage, and use of flammable and combustible liquids with a flash point below 200°F. This section does not apply to:

(1) Bulk transportation of flammable and combustible liquids;

(2) Storage, handling, and use of fuel oil tanks and containers connected with oil burning equipment;

(3) Storage of flammable and combustible liquids on farms.

(4) Liquids without flashpoints that may be flammable under some conditions, such as certain halogenated hydrocarbons and mixtures containing halogenated hydrocarbons;

(5) Mists, sprays, or foams, except flammable aerosols covered in WAC 296-24-33009; or

(6) Installations made in accordance with requirements of the following standards:

(a) National Fire Protection Association Standard for Drycleaning Plants, NFPA No. 32-1970;

(b) National Fire Protection Association Standard for the Manufacture of Organic Coatings, NFPA No. 35-1970;

(c) National Fire Protection Association Standard for Solvent Extraction Plants, NFPA No. 36-1967; or

(d) National Fire Protection Association Standard for the Installation and Use of Stationary Combustion Engines and Gas Turbines, NFPA No. 37-1970.

[Statutory Authority: RCW 49.17.010, [49.17].050 and [49.17].060. 95-22-015, § 296-24-33003, filed 10/20/95, effective 1/16/96. Statutory Authority: Chapter 49.17 RCW. 94-06-068 (Order 93-17), § 296-24-33003, filed 3/2/94, effective 3/1/95; Order 73-5, § 296-24-33003, filed 5/9/73 and Order 73-4, § 296-24-33003, filed 5/7/73.]

WAC 296-24-33005 Tank storage. (1) Design and construction of tanks.

(a) Materials.

(i) Tanks shall be built of steel except as provided in (1)(a)(ii) through (v) of this section.

(ii) Tanks may be built of materials other than steel for installation underground or if required by the properties of the liquid stored. Tanks located above ground or inside buildings shall be of noncombustible construction.

(iii) Tanks built of materials other than steel shall be designed to specifications embodying principles recognized as good engineering design for the material used.

(iv) Unlined concrete tanks may be used for storing flammable or combustible liquids having a gravity of 40°API or heavier. Concrete tanks with special lining may be used for other services provided the design is in accordance with sound engineering practice.

(v) Tanks may have combustible or noncombustible linings.

(vi) Special engineering consideration shall be required if the specific gravity of the liquid to be stored exceeds that of water or if the tanks are designed to contain flammable or combustible liquids at a liquid temperature below 0°F.

(b) Fabrication.

(i) Tanks may be of any shape or type consistent with sound engineering design.

(ii) Metal tanks shall be welded, riveted, and caulked, brazed, or bolted, or constructed by use of a combination of these methods. Filler metal used in brazing shall be nonferrous metal or an alloy having a melting point above 1000°F and below that of the metal joined.

(c) Atmospheric tanks.

(i) Atmospheric tanks shall be built in accordance with acceptable good standards of design. Atmospheric tanks may be built in accordance with:

(A) Underwriters' Laboratories, Inc., Subjects No. 142, Standard for Steel Aboveground Tanks for Flammable and Combustible Liquids, 1968; No. 58, Standards for Steel Underground Tanks for Flammable and COMBUSTIBLE Liquids, Fifth Edition, December 1961; or No. 80, Standard for Steel Inside Tanks for Oil-Burner Fuel, September 1963.

(B) American Petroleum Institute Standards No. 650, Welded Steel Tanks for Oil Storage, Third Edition, 1966.

(C) American Petroleum Institute Standards No. 12B, Specification for Bolted Production Tanks, Eleventh Edition, May 1958, and Supplement 1, March 1962; No. 12D, Specification for Large Welded Production Tanks, Seventh Edition, August 1957; or No. 12F, Specification for Small Welded Production Tanks, Fifth Edition, March 1961. Tanks built in accordance with these standards shall be used only as production tanks for storage of crude petroleum in oil-producing areas.

(ii) Tanks designed for underground service not exceeding 2,500 gallons capacity may be used aboveground.

(iii) Low-pressure tanks and pressure vessels may be used as atmospheric tanks.

(iv) Atmospheric tanks shall not be used for the storage of a flammable or combustible liquid at a temperature at or above its boiling point.

(d) Low pressure tanks.

(i) The normal operating pressure of the tank shall not exceed the design pressure of the tank.

(ii) Low-pressure tanks shall be built in accordance with acceptable standards of design. Low-pressure tanks may be built in accordance with:

(A) American Petroleum Institute Standard No. 620, Recommended Rules for the Design and Construction of Large, Welded, Low-Pressure Storage Tanks, Third Edition, 1966.

(B) The principles of the Code for Unfired Pressure Vessels, Section VIII of the ASME Boiler and Pressure Vessels Code, 1968.

(iii) Atmospheric tanks built according to the Underwriters' Laboratories, Inc., requirements in (1)(c)(i) of this section may be used for operating pressures not exceeding 1 p.s.i.g. and shall be limited to 2.5 p.s.i.g. under emergency venting conditions. Pressure vessels may be used as low-pressure tanks.

(e) Pressure vessels.

(i) The normal operating pressure of the vessel shall not exceed the design pressure of the vessel.

(ii) Pressure vessels shall be built in accordance with the Code for Unfired Pressure Vessels, Section VIII of the ASME Boiler and Pressure Vessel Code, 1968.

(f) Provisions for internal corrosion. When tanks are not designed in accordance with the American Petroleum Institute, American Society of Mechanical Engineers, or the Underwriters' Laboratories, Inc.'s standards, or if corrosion is anticipated beyond that provided for in the design formulas used, additional metal thickness or suitable protective coatings or linings shall be provided to compensate for the corrosion loss expected during the design life of the tank.

(2) Installation of outside aboveground tanks.

(a) Location with respect to property lines and public ways.

(i) Every aboveground tank for the storage of flammable or combustible liquids, except those liquids with boil-over characteristics and unstable liquids, operating at pressures not in excess of 2.5 p.s.i.g. and equipped with emergency venting which will not permit pressures to exceed 2.5 p.s.i.g. shall be located in accordance with Table H-5.

(ii) Every aboveground tank for the storage of flammable or combustible liquids, except those liquids with boil-over characteristics and unstable flammable or combustible liquids, operating at pressures exceeding 2.5 p.s.i.g. or equipped with emergency venting which will permit pressures to exceed 2.5 p.s.i.g. shall be located in accordance with Table H-6.

(iii) Every aboveground tank for the storage of flammable or combustible liquids with boil-over characteristics shall be located in accordance with Table H-7.

(iv) Every aboveground tank for the storage of unstable liquids shall be located in accordance with Table H-8.

(v) Reference minimum distances for use in Tables H-5 to H-8 inclusive.

(vi) Where end failure or horizontal pressure tanks and vessels may expose property, the tank shall be placed with the longitudinal axis parallel to the nearest important exposure.

TABLE H-5

Type of tank	Protection	Minimum distance in feet from property line which may be built upon, including the opposite side of a public way.	Minimum distance in feet from nearest side of any public way or from nearest important building and shall be not less than 5 feet.
Floating roof ———	Protection for exposures.	1/2 times diameter of tank but need not exceed 90 ft.	1/6 times diameter of tank but need not exceed 30 ft.
	None ———	Diameter of tank but need not exceed 175 ft.	1/6 times diameter of tank but need not exceed 30 ft.
Vertical with weak roof to shell seam	Approved foam or inerting system on the tank.	1/2 times diameter of tank but need not exceed 90 ft. and shall not be less than 5 ft.	1/6 times diameter of tank but need not exceed 30 ft.
	Protection for exposures.	Diameter of tank but need not exceed 175 ft.	1/3 times diameter of tank but need not exceed 60 ft.
	None ———	2 times diameter of tank but need not exceed 350 ft.	1/3 times diameter of tank but need not exceed 60 ft.

TABLE H-5

Type of tank	Protection	Minimum distance in feet from property line which may be built upon, including the opposite side of a public way.	Minimum distance in feet from nearest side of any public way or from nearest important building and shall be not less than 5 feet.
Horizontal and vertical, with emergency relief venting to limit pressures to 2.5 p.s.i.g.	Approved inerting system on the tank or approved foam system on vertical tanks.	1/2 times Table H-9 but shall not be less than 5 ft.	1/2 times Table H-9.
	Protection for exposures.	Table H-9 ———	Table H-9
	None ———	2 times table ——	Table H-9

TABLE H-6

Type of tank	Protection	Minimum distance in feet from property line which may be built upon, including the opposite side of a public way.	Minimum distance in feet from nearest side of any public way or from nearest important building.
Any type -	Protection for exposures.	1 1/2 times Table H-9 but shall not be less than 25 ft.	1 1/2 times Table H-9 but shall not be less than 25 ft.
	None ———	3 times Table H-9 but shall not be less than 50 ft.	1 1/2 times Table H-9 but shall not be less than 25 ft.

TABLE H-7

Type of tank	Protection	Minimum distance in feet from property line which may be built upon, including the opposite side of a public way.	Minimum distance in feet from nearest side of any public way or from nearest important building.
Floating roof ———	Protection for exposures.	Diameter of tank but need not exceed 175 ft.	1/3 times diameter of tank but need not exceed 60 ft.
	None ———	2 times diameter of tank but need not exceed 350 ft.	1/3 times diameter of tank but need not exceed 60 ft.
Fixed roof ———	Approved foam or inerting system.	Diameter of tank but need not exceed 175 ft.	1/3 times diameter of tank but need not exceed 60 ft.
	Protection for exposures.	2 times diameter of tank but need not exceed 350 ft.	2/3 times diameter of tank but need not exceed 120 ft.
	None ———	4 times diameter of tank but need not exceed 350 ft.	2/3 times diameter of tank but need not exceed 120 ft.

TABLE H-8

Type of tank	Protection	Minimum distance in feet from property line which may be built upon, including the opposite side of a public way.	Minimum distance in feet from nearest side of any public way or from nearest important building.
Horizontal and vertical tanks with emergency relief venting to permit pressure not in excess of 2.5 p.s.i.g.	Tank protected with any of the following: Approved water spray, approved inerting, approved insulation and refrigeration, approved barricade.	See Table H-9, but the distance may be not less than 25 ft.	Not less than 25 ft.
	Protection for exposures.	2 1/2 times Table H-9 but not less than 50 ft.	Not less than 50 ft.
	None ———	5 times Table H-9 but not less than 100 ft.	Not less than 100 ft.
Horizontal and vertical tanks with emergency relief venting to permit pressure over 2.5 p.s.i.g.	Tank protected with any one of the following: Approved water spray, approved inerting, approved insulation and refrigeration, approved barricade.	2 times Table H-9 but not less than 50 ft.	Not less than 50 ft.
	Protection for exposures.	4 times Table H-9 but not less than 100 ft.	Not less than 100 ft.
	None ———	8 times Table H-9 but not less than 150 ft.	Not less than 150 ft.

TABLE H-9

Capacity tank gallons	Minimum distance in feet from property line which may be built upon, including the opposite side of a public way.	Minimum distance in feet from nearest side of any public way or from nearest important building.
275 or less	5	5
276 to 750	10	5
751 to 12,000	15	5
12,001 to 30,000	20	5
30,001 to 50,000	30	10
50,001 to 100,000	50	15
100,001 to 500,000	80	25
500,001 to 1,000,000	100	35
1,000,001 to 2,000,000	135	45
2,000,001 to 3,000,000	165	55
3,000,001 or more	175	60

(b) Spacing (shell-to-shell) between aboveground tanks.

(i) The distance between any two flammable or combustible liquid storage tanks shall not be less than 3 feet.

(ii) Except as provided in (2)(b)(iii) of this section, the distance between any two adjacent tanks shall not be less than one-sixth the sum of their diameters. When the diameter of one tank is less than one-half the diameter of the adjacent tank, the distance between the two tanks shall not be less than one-half the diameter of the smaller tank.

(iii) Where crude petroleum in conjunction with production facilities are located in noncongested areas and have capacities not exceeding 126,000 gallons (3,000 barrels), the distance between such tanks shall not be less than 3 feet.

(iv) Where unstable flammable or combustible liquids are stored, the distance between such tanks shall not be less than one-half the sum of their diameters.

(v) When tanks are compacted in three or more rows or in an irregular pattern, greater spacing or other means shall be provided so that inside tanks are accessible for firefighting purposes.

(vi) The minimum separation between a liquefied petroleum gas container and a flammable or combustible liquid storage tank shall be 20 feet, except in the case of flammable or combustible liquid tanks operating at pressures exceeding 2.5 p.s.i.g. or equipped with emergency venting which will permit pressures to exceed 2.5 p.s.i.g. in which case the provisions of (2)(b)(i) and (ii) of this section shall apply. Suitable means shall be taken to prevent the accumulation of flammable or combustible liquids under adjacent liquefied petroleum gas containers such as by diversion curbs or grading. When flammable or combustible liquid storage tanks are within a diked area, the liquefied petroleum gas containers shall be outside the diked area and at least 10 feet away from the centerline of the wall of the diked area. The foregoing provisions shall not apply when liquefied petroleum gas containers of 125 gallons or less capacity are installed adjacent to fuel oil supply tanks of 550 gallons or less capacity.

(c) Location of outside aboveground tanks with respect to important buildings on same property. Every outside aboveground tank shall be separated from important buildings on the same property by distances not less than those specified in (2)(a)(i), (ii), (iii) and (iv) of this section, whichever is applicable. The appropriate distance column in Tables H-5, H-6, H-7, H-8, or H-9, that shall be used shall be the one reading: "Minimum distance in feet from nearest side of any public way or from nearest important building."

(d) Normal venting for aboveground tanks.

(i) Atmospheric storage tanks shall be adequately vented to prevent the development of vacuum or pressure sufficient to distort the roof of a cone roof tank or exceed the design pressure in the case of other atmospheric tanks, as a result of filling or emptying, and atmospheric temperature changes.

(ii) Normal vents shall be sized either in accordance with: (A) The American Petroleum Institute Standard 2000 (1968), Venting Atmospheric and Low-Pressure Storage Tanks; or (B), other accepted standard; or (C) shall be at least as large as the filling or withdrawal connection, whichever is larger but in no case less than 1 1/4 inch nominal inside diameter.

(iii) Low-pressure tanks and pressure vessels shall be adequately vented to prevent development of pressure or vacuum, as a result of filling or emptying and atmospheric temperature changes, from exceeding the design pressure of the tank or vessel. Protection shall also be provided to prevent over-pressure from any pump discharging into the tank or vessel when the pump discharge pressure can exceed the design pressure of the tank or vessel.

(iv) If any tank or pressure vessel has more than one fill or withdrawal connection and simultaneous filling or with-

drawal can be made, the vent size shall be based on the maximum anticipated simultaneous flow.

(v) Unless the vent is designed to limit the internal pressure 2.5 p.s.i. or less, the outlet of vents and vent drains shall be arranged to discharge in such a manner as to prevent localized overheating of any part of the tank in the event vapors from such vents are ignited.

(vi) Tanks and pressure vessels storing Class IA liquids shall be equipped with venting devices which shall be normally closed except when venting to pressures or vacuum conditions. Tanks and pressure vessels storing Class IB and IC liquids shall be equipped with venting devices which shall be normally closed except when venting under pressure or vacuum conditions, or with approved flame arresters.

Exemption: Tanks of 3,000 bbls. capacity or less containing crude petroleum in crude-producing areas; and, outside aboveground atmospheric tanks under 1,000 gallons capacity containing other than Class IA flammable liquids may have open vents. (See (2)(f)(ii) of this section.)

(vii) Flame arresters or venting devices required in (2)(e)(vi) of this section may be omitted for Class IB and IC liquids where conditions are such that their use may, in case of obstruction, result in tank damage.

(e) Emergency relief venting for fire exposure for aboveground tanks.

(i) Every aboveground storage tank shall have some form of construction or device that will relieve excessive internal pressure caused by exposure fires.

(ii) In a vertical tank the construction referred to in (2)(e)(i) of this section may take the form of a floating roof, lifter roof, a weak roof-to-shell seam, or other approved pressure relieving construction. The weak roof-to-shell seam shall be constructed to fail preferential to any other seam.

(iii) Where entire dependence for emergency relief is placed upon pressure relieving devices, the total venting capacity of both normal and emergency vents shall be enough to prevent rupture of the shell or bottom of the tank if vertical, or of the shell or heads if horizontal. If unstable liquids are stored, the effects of heat or gas resulting from polymerization, decomposition, condensation, or self-reactivity shall be taken into account. The total capacity of both normal and emergency venting devices shall be not less than that derived from Table H-10 except as provided in (2)(e)(v) and (vi) of this section. Such device may be a self-closing manhole cover, or one using long bolts that permit the cover to lift under internal pressure, or an additional or larger relief valve or valves. The wetted area of the tank shall be calculated on the basis of 55 percent of the total exposed area of a sphere or spheroid, 75 percent of the total exposed area of a horizontal tank and the first 30 feet above grade of the exposed shell area of a vertical tank.

TABLE 10
WETTED AREA VERSUS CUBIC FEET
FREE AIR PER HOUR
(14.7 psia and 60°F)

Square feet	CFH	Square feet	CFH	Square feet	CFH
20	21,100	200	211,000	1,000	524,000
30	31,600	250	239,000	1,200	557,000
40	42,100	300	265,000	1,400	587,000
50	52,700	350	288,000	1,600	614,000
60	63,200	400	312,000	1,800	639,000
70	73,700	500	354,000	2,000	662,000
80	84,200	600	392,000	2,400	704,000
90	94,800	700	428,000	2,800	742,000
100	105,000	800	462,000	and	
120	126,000	900	493,000	over	
140	147,000	1,000	524,000		
160	168,000				
180	190,000				
200	211,000				

(iv) For tanks and storage vessels designed for pressure over 1 p.s.i.g., the total rate of venting shall be determined in accordance with Table H-10, except that when the exposed wetted area of the surface is greater than 2,800 square feet, the total rate of venting shall be calculated by the following formula:

$$CFH = 1{,}107A^{0.82}$$

Where:

CFH = Venting requirement, in cubic feet of free air per hour.

A = Exposed wetted surface, in square feet.

Note: The foregoing formula is based on $Q = 21{,}000A^{0.82}$.

(v) The total emergency relief venting capacity for any specific stable liquid may be determined by the following formula:

Cubic feet of free air per hour = V

$$V = \frac{1337}{L\,M}$$

V = Cubic feet of free air per hour from Table H-10.

L = Latent heat of vaporization of specific liquid in B.t.u. per pound.

M = Molecular weight of specific liquids.

(vi) The required airflow rate of (2)(e)(iii) or (v) of this section may be multiplied by the appropriate factor listed in the following schedule when protection is provided as indicated. Only one factor may be used for any one tank.

0.5 for drainage in accordance with (2)(g)(ii) of this section for tanks over 200 square feet of wetted area.
0.3 for approved water spray.
0.3 for approved insulation.
0.15 for approved water spray with approved insulation.

(vii) The outlet of all vents and vent drains on tanks equipped with emergency venting to permit pressures exceeding 2.5 p.s.i.g. shall be arranged to discharge in such a way as to prevent localized overheating of any part of the tank, in the event vapors from such vents are ignited.

(viii) Each commercial tank venting device shall have stamped on it the opening pressure, the pressure at which the valve reaches the full open position, and the flow capacity at the latter pressure, expressed in cubic feet per hour of air at 60°F and at a pressure of 14.7 p.s.i.a.

(ix) The flow capacity of tank venting devices 12 inches and smaller in nominal pipe size shall be determined by actual test of each type and size of vent. These flow tests may be conducted by the manufacturer if certified by a qualified impartial observer, or may be conducted by an outside

agency. The flow capacity of tank venting devices larger than 12 inches nominal pipe size, including manhole covers with long bolts or equivalent, may be calculated provided that the opening pressure is actually measured, the rating pressure and corresponding free orifice area are stated, the word "calculated" appears on the nameplate, and the computation is based on a flow coefficient of 0.5 applied to the rated orifice area.

(f) Vent piping for aboveground tanks.

(i) Vent piping shall be constructed in accordance with WAC 296-24-33007 of this section.

(ii) Where vent pipe outlets for tanks storing Class I liquids are adjacent to buildings or public ways, they shall be located so that the vapors are released at a safe point outside of buildings and not less than 12 feet above the adjacent ground level. In order to aid their dispersion, vapors shall be discharged upward or horizontally away from closely adjacent walls. Vent outlets shall be located so that flammable vapors will not be trapped by eaves or other obstructions and shall be at least five feet from building openings.

(iii) When tank vent piping is manifolded, pipe sizes shall be such as to discharge within the pressure limitations of the system, the vapors they may be required to handle when manifolded tanks are subject to the same fire exposure.

(g) Drainage, dikes, and walls for aboveground tanks.

(i) Drainage and diked areas. The area surrounding a tank or a group of tanks shall be provided with drainage as in (2)(g)(ii) of this section, or shall be diked as provided in (2)(g)(iii), to prevent accidental discharge of liquid from endangering adjoining property or reaching waterways.

(ii) Drainage. Where protection of adjoining property or waterways is by means of a natural or manmade drainage system, such systems shall comply with the following:

(A) A slope of not less than 1 percent away from the tank toward the drainage system shall be provided.

(B) The drainage system shall terminate in vacant land or other area or in an impounding basin having a capacity not smaller than that of the largest tank served. This termination area and the route of the drainage system shall be so located that, if the flammable or combustible liquids in the drainage system are ignited, the fire will not seriously expose tanks or adjoining property.

(C) The drainage system, including automatic drainage pumps, shall not discharge to adjoining property, natural water courses, public sewers, or public drains unless the discharge of flammable or combustible liquids would not constitute a hazard, or the system is so designed that it will not permit flammable or combustible liquids to be released.

(iii) Diked areas. Where protection of adjoining property or waterways is accomplished by retaining the liquid around the tank by means of a dike, the volume of the diked area shall comply with the following requirements:

(A) Except as provided in (2)(g)(iii)(B) of this section, the volumetric capacity of the diked area shall not be less than the greatest amount of liquid that can be released from the largest tank within the diked area, assuming a full tank. The capacity of the diked area enclosing more than one tank shall be calculated by deducting the volume of the tanks other than the largest tank below the height of the dike.

(B) For a tank or group of tanks with fixed roofs containing crude petroleum with boilover characteristics, the volumetric capacity of the diked area shall be not less than the capacity of the largest tank served by the enclosure, assuming a full tank. The capacity of the diked enclosure shall be calculated by deducting the volume below the height of the dike of all tanks within the enclosure.

(C) Walls of the diked area shall be of earth, steel, concrete or solid masonry designed to be liquidtight and to withstand a full hydrostatic head. Earthen walls 3 feet or more in height shall have a flat section at the top not less than 2 feet wide. The slope of an earthen wall shall be consistent with the angle of repose of the material of which the wall is constructed.

(D) The walls of the diked area shall be restricted to an average height of 6 feet above interior grade.

(E) Where provision is made for draining water from diked areas, drainage shall be provided at a uniform slope of not less than 1 percent away from tanks toward a sump, drainbox, or other safe means of disposal located at the greatest practical distance from the tank. Such drains shall normally be controlled in a manner so as to prevent flammable or combustible liquids from entering natural water courses, public sewers, or public drains, if their presence would constitute a hazard. Control of drainage shall be accessible under fire conditions.

(F) No loose combustible material, empty or full drum or barrel, shall be permitted within the diked area.

(G) Each diked area containing two or more tanks shall be subdivided preferably by drainage channels or at least by intermediate curbs in order to prevent spills from endangering adjacent tanks within the diked area as follows:

(I) When storing normally stable liquids in vertical cone roof tanks constructed with weak roof-to-shell seam or approved floating roof tanks or when storing crude petroleum in producing areas in any type of tank, one subdivision for each tank in excess of 10,000 bbls. and one subdivision for each group of tanks (no tank exceeding 10,000 bbls. capacity) having an aggregate capacity not exceeding 15,000 bbls.

(II) When storing normally stable flammable or combustible liquids in tanks not covered in (g)(iii)(G)(I) of this subsection, one subdivision for each tank in excess of 100,000 gallons (2,500 bbls.) and one subdivision for each group of tanks (no tank exceeding 100,000 gallons capacity) having an aggregate capacity not exceeding 150,000 gallons (3,570 bbls.).

(III) When storing unstable liquids in any type of tank, one subdivision for each tank except that tanks installed in accordance with the drainage requirements of NFPA 15-1969, Standard for Water Spray Fixed Systems for Fire Protection shall require no additional subdivision.

(IV) The drainage channels or intermediate curbs shall be located between tanks so as to take full advantage of the available space with due regard for the individual tank capacities. Intermediate curbs, where used, shall be not less than 18 inches in height.

(h) Tank openings other than vents for aboveground tanks.

(i) Connections for all tank openings shall be vaportight and liquidtight. Vents are covered in (2)(d) through (f) of this section.

(ii) Each connection to an aboveground tank through which liquid can normally flow shall be provided with an

internal or an external valve located as close as practical to the shell of the tank. Such valves, when external, and their connections to the tank shall be of steel except when the chemical characteristics of the liquid stored are incompatible with steel. When materials other than steel are necessary, they shall be suitable for the pressures, structural stresses, and temperatures involved, including fire exposures.

(iii) Each connection below the liquid level through which liquid does not normally flow shall be provided with a liquidtight closure. This may be a valve, plug, or blind, or a combination of these.

(iv) Openings for gaging shall be provided with a vapor tight cap or cover.

(v) For Class IB and Class IC liquids other than crude oils, gasolines, and asphalts, the fill pipe shall be so designed and installed as to minimize the possibility of generating static electricity. A fill pipe entering the top of a tank shall terminate within 6 inches of the bottom of the tank and shall be installed to avoid excessive vibration.

(vi) Filling and emptying connections which are made and broken shall be located outside of buildings at a location free from any source of ignition and not less than 5 feet away from any building opening. Such connection shall be closed and liquidtight when not in use. The connection shall be properly identified.

(3) Installation of underground tanks.

(a) Location. Excavation for underground storage tanks shall be made with due care to avoid undermining of foundations of existing structures. Underground tanks or tanks under buildings shall be so located with respect to existing building foundations and supports that the loads carried by the latter cannot be transmitted to the tank. The distance from any part of a tank storing Class I liquids to the nearest wall of any basement or pit shall be not less than 1 foot, and to any property line that may be built upon, not less than 3 feet. The distance from any part of a tank storing Class II or Class III liquids to the nearest wall of any basement, pit or property line shall not be less than 1 foot.

(b) Depth and cover. Underground tanks shall be set on firm foundations and surrounded with at least 6 inches of noncorrosive, inert materials such as clean sand, earth, or gravel well tamped in place. The tank shall be placed in the hole with care since dropping or rolling the tank into the hole can break a weld, puncture or damage the tank, or scrape off the protective coating of coated tanks. Tanks shall be covered with a minimum of 2 feet of earth or shall be covered with not less than 1 foot of earth, on top of which shall be placed a slab of reinforced concrete not less than 4 inches thick. When underground tanks are, or are likely to be, subject to traffic, they shall be protected against damage from vehicles passing over them by at least 3 feet of earth cover, or 18 inches of well-tamped earth, plus 6 inches of reinforced concrete or 8 inches of asphaltic concrete. When asphaltic or reinforced concrete paving is used as part of the protection, it shall extend at least 1 foot horizontally beyond the outline of the tank in all directions.

(c) Corrosion protection. Corrosion protection for the tank and its piping shall be provided by one or more of the following methods:

(i) Use of protective coatings or wrappings;

(ii) Cathodic protection; or,

(iii) Corrosion resistant materials of construction.

(d) Vents.

(i) Location and arrangement of vents for Class I liquids. Vent pipes from tanks storing Class I liquids shall be so located that the discharge point is outside of buildings, higher than the fill pipe opening, and not less than 12 feet above the adjacent ground level. Vent pipes shall discharge only upward in order to disperse vapors. Vent pipes 2 inches or less in nominal inside diameter shall not be obstructed by devices that will cause excessive back pressure. Vent pipe outlets shall be so located that flammable vapors will not enter building openings, or be trapped under eaves or other obstructions. If the vent pipe is less than 10 feet in length, or greater than 2 inches in nominal inside diameter, the outlet shall be provided with a vacuum and pressure relief device or there shall be an approved flame arrester located in the vent line at the outlet or within the approved distance from the outlet.

(ii) Size of vents. Each tank shall be vented through piping adequate in size to prevent blow-back of vapor or liquid at the fill opening while the tank is being filled. Vent pipes shall be not less than 1 1/4 inch nominal inside diameter.

TABLE H-11

VENT LINE DIAMETERS

Maximum flow GPM	Pipe length*		
	50 feet	100 feet	200 feet
	Inches	Inches	Inches
100	1 1/4	1 1/4	1 1/4
200	1 1/4	1 1/4	1 1/4
300	1 1/4	1 1/4	1 1/2
400	1 1/4	1 1/2	2
500	1 1/2	1 1/2	2
600	1 1/2	2	2
700	2	2	2
800	2	2	3
900	2	2	3
1,000	2	2	3

* Vent lines of 50 ft., 100 ft., and 200 ft. of pipe plus 7 ells.

(iii) Location and arrangement of vents for Class II or Class III liquids. Vent pipes from tanks storing Class II or Class III flammable liquids shall terminate outside of the building and higher than the fill pipe opening. Vent outlets shall be above normal snow level. They may be fitted with return bends, coarse screens or other devices to minimize ingress of foreign material.

(iv) Vent piping shall be constructed in accordance with WAC 296-24-33007. Vent pipes shall be so laid as to drain toward the tank without sags or traps in which liquid can collect. They shall be located so that they will not be subjected to physical damage. The tank end of the vent pipe shall enter the tank through the top.

(v) When tank vent piping is manifolded, pipe sizes shall be such as to discharge, within the pressure limitations of the system, the vapors they may be required to handle when manifolded tanks are filled simultaneously.

(e) Tank openings other than vents.

(i) Connections for all tank openings shall be vapor or liquid tight.

(ii) Openings for manual gaging, if independent of the fill pipe, shall be provided with a liquid-tight cap or cover. If inside a building, each such opening shall be protected against liquid overflow and possible vapor release by means of a spring-loaded check valve or other approved device.

(iii) Fill and discharge lines shall enter tanks only through the top. Fill lines shall be sloped toward the tank.

(iv) For Class IB and Class IC liquids other than crude oils, gasolines, and asphalts, the fill pipe shall be so designed and installed as to minimize the possibility of generating static electricity by terminating within 6 inches of the bottom of the tank.

(v) Filling and emptying connections which are made and broken shall be located outside of buildings at a location free from any source of ignition and not less than 5 feet away from any building opening. Such connection shall be closed and liquidtight when not in use. The connection shall be properly identified.

(4) Installation of tanks inside of buildings.

(a) Location. Tanks shall not be permitted inside of buildings except as provided in WAC 296-24-33011 and 296-24-33015 through 296-24-33019.

(b) Vents. Vents for tanks inside of buildings shall be as provided in (2)(d),(e),(f)(ii) and (3)(d) of this section, except that emergency venting by the use of weak roof seams on tanks shall not be permitted. Vents shall discharge vapors outside the buildings.

(c) Vent piping. Vent piping shall be constructed in accordance with WAC 296-24-33007.

(d) Tank openings other than vents.

(i) Connections for all tank openings shall be vapor or liquidtight. Vents are covered in (4)(b) of this section.

(ii) Each connection to a tank inside of buildings through which liquid can normally flow shall be provided with an internal or an external valve located as close as practical to the shell of the tank. Such valves, when external, and their connections to the tank shall be of steel except when the chemical characteristics of the liquid stored are incompatible with steel. When materials other than steel are necessary, they shall be suitable for the pressures, structural stresses, and temperatures involved, including fire exposures.

(iii) Flammable or combustible liquid tanks located inside of buildings, except in one-story buildings designed and protected for flammable or combustible liquid storage, shall be provided with an automatic-closing heat-actuated valve on each withdrawal connection below the liquid level, except for connections used for emergency disposal, to prevent continued flow in the event of fire in the vicinity of the tank. This function may be incorporated in the valve required in (4)(d)(ii) of this section, and if a separate valve, shall be located adjacent to the valve required in (4)(d)(ii) of this section.

(iv) Openings for manual gaging, if independent of the fill pipe (see (4)(d)(vi) of this section), shall be provided with a vaportight cap or cover. Each such opening shall be protected against liquid overflow and possible vapor release by means of a spring loaded check valve or other approved device.

(v) For Class IB and Class IC liquids other than crude oils, gasolines, and asphalts, the fill pipe shall be so designed and installed as to minimize the possibility of generating static electricity by terminating within 6 inches of the bottom of the tank.

(vi) The fill pipe inside of the tank shall be installed to avoid excessive vibration of the pipe.

(vii) The inlet of the fill pipe shall be located outside of buildings at a location free from any source of ignition and not less than 5 feet away from any building opening. The inlet of the fill pipe shall be closed and liquidtight when not in use. The fill connection shall be properly identified.

(viii) Tanks inside buildings shall be equipped with a device, or other means shall be provided, to prevent overflow into the building.

(5) Supports, foundations, and anchorage for all tank locations.

(a) General. Tank supports shall be installed on firm foundations. Tank supports shall be of concrete, masonry, or protected steel. Single wood timber supports (not cribbing) laid horizontally may be used for outside aboveground tanks if not more than 12 inches high at their lowest point.

(b) Fire resistance. Steel supports or exposed piling shall be protected by materials having a fire resistance rating of not less than 2 hours, except that steel saddles need not be protected if less than 12 inches high at their lowest point. Water spray protection or its equivalent may be used in lieu of fire-resistive materials to protect supports.

(c) Spheres. The design of the supporting structure for tanks such as spheres shall receive special engineering consideration.

(d) Load distribution. Every tank shall be so supported as to prevent the excessive concentration of loads on the supporting portion of the shell.

(e) Foundations. Tanks shall rest on the ground or on foundations made of concrete, masonry, piling, or steel. Tank foundations shall be designed to minimize the possibility of uneven settling of the tank and to minimize corrosion in any part of the tank resting on the foundation.

(f) Flood areas. Where a tank is located in an area that may be subjected to flooding, the applicable precautions outlined in (5)(f) of this section shall be observed.

(i) No aboveground vertical storage tank containing a flammable or combustible liquid shall be located so that the allowable liquid level within the tank is below the established maximum flood stage, unless the tank is provided with a guiding structure such as described in (5)(f)(xiii), (xiv) and (xv) of this section.

(ii) Independent water supply facilities shall be provided at locations where there is no ample and dependable public water supply available for loading partially empty tanks with water.

(iii) In addition to the preceding requirements, each tank so located that more than 70 percent, but less than 100 percent, of its allowable liquid storage capacity will be submerged at the established maximum flood stage, shall be safeguarded by one of the following methods: Tank shall be raised, or its height shall be increased, until its top extends above the maximum flood stage a distance equivalent to 30 percent or more of its allowable liquid storage capacity: Provided, however, That the submerged part of the tank shall not exceed two and one-half times the diameter. Or, as an alternative to the foregoing, adequate noncombustible structural

guides, designed to permit the tank to float vertically without loss of product, shall be provided.

(iv) Each horizontal tank so located that more than 70 percent of its storage capacity will be submerged at the established flood stage, shall be anchored, attached to a foundation of concrete or of steel and concrete, of sufficient weight to provide adequate load for the tank when filled with flammable or combustible liquid and submerged by flood waters to the established flood stage, or adequately secured by other means.

(v) Spherical and spheroidal tanks shall be protected by applicable methods as specified for either vertical or horizontal tanks.

(vi) At locations where there is no ample and dependable water supply, or where filling of underground tanks with liquid is impracticable because of the character of their contents, their use, or for other reasons, each tank shall be safeguarded against movement when empty and submerged by high groundwater or flood waters by anchoring, weighting with concrete or other approved solid loading material, or securing by other means. Each such tank shall be so constructed and installed that it will safely resist external pressures due to high groundwater or flood waters.

(vii) At locations where there is an ample and dependable water supply available, underground tanks containing flammable or combustible liquids, so installed that more than 70 percent of their storage capacity will be submerged at the maximum flood stage, shall be so anchored, weighted, or secured by other means, as to prevent movement of such tanks when filled with flammable or combustible liquids, and submerged by flood waters to the established flood stage.

(viii) Pipe connections below the allowable liquid level in a tank shall be provided with valves or cocks located as closely as practicable to the tank shell. Such valves and their connections to tanks shall be of steel or other material suitable for use with the liquid being stored. Cast iron shall not be used.

(ix) At locations where an independent water supply is required, it shall be entirely independent of public power and water supply. Independent source of water shall be available when flood waters reach a level not less than 10 feet below the bottom of the lowest tank on a property.

(x) The self-contained power and pumping unit shall be so located or so designed that pumping into tanks may be carried on continuously throughout the rise in flood waters from a level 10 feet below the lowest tank to the level of the potential flood stage.

(xi) Capacity of the pumping unit shall be such that the rate of rise of water in all tanks shall be equivalent to the established potential average rate of rise of flood waters at any stage.

(xii) Each independent pumping unit shall be tested periodically to insure that it is in satisfactory operating condition.

(xiii) Structural guides for holding floating tanks above their foundations shall be so designed that there will be no resistance to the free rise of a tank, and shall be constructed of noncombustible material.

(xiv) The strength of the structure shall be adequate to resist lateral movement of a tank subject to a horizontal force in any direction equivalent to not less than 25 pounds per square foot acting on the projected vertical cross-sectional area of the tank.

(xv) Where tanks are situated on exposed points or bends in a shoreline where swift currents in flood waters will be present, the structures shall be designed to withstand a unit force of not less than 50 pounds per square foot.

(xvi) The filling of a tank to be protected by water loading shall be started as soon as flood waters reach a dangerous flood stage. The rate of filling shall be at least equal to the rate of rise of the floodwaters (or the established average potential rate of rise).

(xvii) Sufficient fuel to operate the water pumps shall be available at all times to insure adequate power to fill all tankage with water.

(xviii) All valves on connecting pipelines shall be closed and locked in closed position when water loading has been completed.

(xix) Where structural guides are provided for the protection of floating tanks, all rigid connections between tanks and pipelines shall be disconnected and blanked off or binded before the floodwaters reach the bottom of the tank, unless control valves and their connections to the tank are of a type designed to prevent breakage between the valve and the tank shell.

(xx) All valves attached to tanks other than those used in connection with water loading operations shall be closed and locked.

(xxi) If a tank is equipped with a swing line, the swing pipe shall be raised to and secured at its highest position.

(xxii) Inspections. The director or his/her designated representative shall make periodic inspections of all plants where the storage of flammable or combustible liquids is such as to require compliance with the foregoing requirements, in order to assure the following:

(A) That all flammable or combustible liquid storage tanks are in compliance with these requirements and so maintained.

(B) That detailed printed instructions of what to do in flood emergencies are properly posted.

(C) That station operators and other employees depended upon to carry out such instructions are thoroughly informed as to the location and operation of such valves and other equipment necessary to effect these requirements.

(g) Earthquake areas. In areas subject to earthquakes, the tank supports and connections shall be designed to resist damage as a result of such shocks.

(6) Sources of ignition. In locations where flammable vapors may be present, precautions shall be taken to prevent ignition by eliminating or controlling sources of ignition. Sources of ignition may include open flames, lightning, smoking, cutting and welding, hot surfaces, frictional heat, sparks (static, electrical, and mechanical), spontaneous ignition, chemical and physical-chemical reactions, and radiant heat.

(7) Testing.

(a) General. All tanks, whether shop built or field erected, shall be strength tested before they are placed in service in accordance with the applicable sections of the code under which they were built. The American Society of Mechanical Engineers (ASME) code stamp. American Petroleum Institute (API) monogram, or the label of the Under-

writers' Laboratories, Inc., on a tank shall be evidence of compliance with this strength test. Tanks not marked in accordance with the above codes shall be strength tested before they are placed in service in accordance with good engineering principles and reference shall be made to the sections on testing in the codes listed in (l)(c)(i), (d)(ii) or (e)(ii) of this section.

(b) Strength. When the vertical length of the fill and vent pipes is such that when filled with liquid the static head imposed upon the bottom of the tank exceeds 10 pounds per square inch, the tank and related piping shall be tested hydrostatically to a pressure equal to the static head thus imposed.

(c) Tightness. In addition to the strength test called for in (7)(a) and (b), all tanks and connections shall be tested for tightness. Except for underground tanks, this tightness test shall be made at operating pressure with air, inert gas, or water prior to placing the tank in service. In the case of field-erected tanks the strength test may be considered to be the test for tank tightness. Underground tanks and piping, before being covered, enclosed, or placed in use, shall be tested for tightness hydrostatically, or with air pressure at not less than 3 pounds per square inch and not more than 5 pounds per square inch.

(d) Repairs. All leaks or deformations shall be corrected in an acceptable manner before the tank is placed in service. Mechanical caulking is not permitted for correcting leaks in welded tanks except pinhole leaks in the roof.

(e) Derated operations. Tanks to be operated at pressures below their design pressure may be tested by the applicable provisions of (7)(a) or (b) based upon the pressure developed under full emergency venting of the tank.

[Statutory Authority: RCW 49.17.010, 49.17.040, 49.17.050, 49.17.060. 06-05-027, § 296-24-33005, filed 2/7/06, effective 4/1/06. Statutory Authority: Chapter 49.17 RCW. 94-15-096 (Order 94-07), § 296-24-33005, filed 7/20/94, effective 9/20/94; 88-23-054 (Order 88-25), § 296-24-33005, filed 11/14/88; Order 76-6, § 296-24-33005, filed 3/1/76; Order 73-5, § 296-24-33005, filed 5/9/73 and Order 73-4, § 296-24-33005, filed 5/7/73.]

WAC 296-24-33007 Piping, valves, and fittings. (1) General.

(a) Design. The design (including selection of materials) fabrication, assembly, test, and inspection of piping systems containing flammable or combustible liquids shall be suitable for the expected working pressures and structural stresses. Conformity with the applicable provisions of Pressure Piping, ANSI B31-1967 series and the provisions of this section, shall be considered prima facie evidence of compliance with the foregoing provisions.

(b) Exceptions. This section does not apply to any of the following:

(i) Tubing or casing on any oil or gas wells and any piping connected directly thereto.

(ii) Motor vehicle, aircraft, boat, or portable or stationary engines.

(iii) Piping within the scope of any applicable boiler and pressures vessel code.

(c) Definitions. As used in this section, piping systems consist of pipe, tubing flanges, bolting, gaskets, valves, fittings, the pressure containing parts of other components such as expansion joints and strainers, and devices which serve such purposes as mixing, separating, snubbing, distributing, metering, or controlling flow.

(2) Materials for piping, valves, and fittings.

(a) Required materials. Materials for piping, valves, or fittings shall be steel, nodular iron or malleable iron, except as provided in subsections (b), (c) and (d).

(b) Exceptions. Materials other than steel, nodular iron, or malleable iron may be used underground, or if required by the properties of the flammable or combustible liquid handled. Material other than steel, nodular iron, or malleable iron shall be designed to specifications embodying principles recognized as good engineering practices for the material used.

(c) Linings. Piping, valves, and fittings may have combustible or noncombustible linings.

(d) Low-melting materials. When low-melting point materials such as aluminum and brass or materials that soften on fire exposure such as plastics, or nonductile materials such as cast iron, are necessary, special consideration shall be given to their behavior on fire exposure. If such materials are used in aboveground piping systems or inside buildings, they shall be suitably protected against fire exposure or so located that any spill resulting from the failure of these materials could not unduly expose persons, important buildings or structures or can be readily controlled by remote valves.

(3) Pipe joints. Joints shall be made liquid tight. Welded or screwed joints or approved connectors shall be used. Threaded joints and connections shall be made up tight with a suitable lubricant or piping compound. Pipe joints dependent upon the friction characteristics of combustible materials for mechanical continuity of piping shall not be used inside buildings. They may be used outside of buildings above or below ground. If used aboveground, the piping shall either be secured to prevent disengagement at the fitting or the piping system shall be so designed that any spill resulting from such disengagement could not unduly expose persons, important buildings or structures, and could be readily controlled by remote valves.

(4) Supports. Piping systems shall be substantially supported and protected against physical damage and excessive stresses arising from settlement, vibration, expansion, or contraction.

(5) Protection against corrosion. All piping for flammable or combustible liquids, both aboveground and underground, where subject to external corrosion, shall be painted or otherwise protected.

(6) Valves. Piping systems shall contain a sufficient number of valves to operate the system properly and to protect the plant. Piping systems in connection with pumps shall contain a sufficient number of valves to control properly the flow of liquid in normal operation and in the event of physical damage. Each connection to pipelines, by which equipment such as tankcars or tank vehicles discharge liquids by means of pumps into storage tanks, shall be provided with a check valve for automatic protection against backflow if the piping arrangement is such that backflow from the system is possible.

(7) Testing. All piping before being covered, enclosed, or placed in use shall be hydrostatically tested to 150 percent of the maximum anticipated pressure of the system, or pneumatically tested to 110 percent of the maximum anticipated pressure of the system, but not less than 5 pounds per square

inch gage at the highest point of the system. This test shall be maintained for a sufficient time to complete visual inspection of all joints and connections, but for at least 10 minutes.

[Order 76-6, § 296-24-33007, filed 3/1/76; Order 73-5, § 296-24-33007, filed 5/9/73 and Order 73-4, § 296-24-33007, filed 5/7/73.]

WAC 296-24-33009 Container and portable tank storage. (1) Scope.

(a) General. This section shall apply only to the storage of flammable or combustible liquids in drums or other containers (including flammable aerosols) not exceeding 60 gallons individual capacity and those portable tanks not exceeding 660 gallons individual capacity.

(b) Exceptions. This section shall not apply to the following:

(i) Storage of containers in bulk plants, service stations, refineries, chemical plants, and distilleries;

(ii) Class I or Class II liquids in the fuel tanks of a motor vehicle, aircraft, boat, or portable or stationary engine;

(iii) Flammable or combustible paints, oils, varnishes, and similar mixtures used for painting or maintenance when not kept for a period in excess of 30 days;

(iv) Beverages when packaged in individual containers not exceeding 1 gallon in size.

(2) Design, construction, and capacity of containers.

(a) General. Only approved containers and portable tanks shall be used. Metal containers and portable tanks meeting the requirements of and containing products authorized by Chapter I, Title 49 of the Code of Federal Regulations - October 1, 1972, (regulations issued by the hazardous materials regulations board, department of transportation), shall be deemed to be acceptable.

(b) Emergency venting. Each portable tank shall be provided with one or more devices installed in the top with sufficient emergency venting capacity to limit internal pressure under fire exposure conditions to 10 p.s.i.g., or 30 percent of the bursting pressure of the tank, whichever is greater. The total venting capacity shall be not less than that specified in WAC 296-24-33005 (2)(e)(iii) or (v). At least one pressure-actuated vent having a minimum capacity of 6,000 cubic feet of free air (14.7 p.s.i.a. and 60°F) shall be used. It shall be set to open at not less than 5 p.s.i.g. If fusible vents are used, they shall be actuated by elements that operate at a temperature not exceeding 300°F.

TABLE H-12
MAXIMUM ALLOWABLE SIZE OF
CONTAINERS AND PORTABLE TANKS

Container Type	Flammable liquids Class IA	Class IB	Class IC	Combustible Liquids Class II	& Class III
Glass or approved plastic	1 pt.	1 qu.	1 gal.	1 gal.	1 gal.
Metal (other than DOTdrums)	1 gal.	5 gal.	5 gal.	5 gal.	5 gal.
Safety cans	2 gal.	5 gal.	5 gal.	5 gal.	5 gal.
Metal drums (DOT spec.)	60 gal.	60 gal.	60 gal.	60 gal.	60 gal.
Approved portable tanks	660 gal.	660 gal.	660 gal.	660 gal.	660 gal.

Container exemptions:

(i) Medicines, beverages, foodstuffs, cosmetics and other common consumer items, when packaged according to commonly accepted practices, shall be exempt from the requirements of (4)(a) and (b) of this section.

(c) Size. Flammable and combustible liquid containers shall be in accordance with Table H-12, except that glass or plastic containers of no more than 1-gallon capacity may be used for a Class IA or IB flammable liquid if:

(i) Such liquid either would be rendered unfit for its intended use by contact with metal or would excessively corrode a metal container so as to create a leakage hazard; and

(ii) The user's process either would require more than 1 pint of Class IA liquid or more than 1 quart of a Class IB liquid of a single assay lot to be used at one time, or would require the maintenance of an analytical standard liquid of a quality which is not met by the specified standards of liquids available, and the quantity of the analytical standard liquid required to be used in any one control process exceeds one-sixteenth the capacity of the container allowed under Table H-12 for the class of liquid; or

(iii) The containers are intended for direct export outside the United States.

(3) Design, construction, and capacity of storage cabinets.

(a) Maximum capacity. Not more than 60 gallons of Class I or Class II liquids, nor more than 120 gallons of Class III liquids may be stored in a storage cabinet.

(b) Fire resistance. Storage cabinets shall be designed and constructed to limit the internal temperature to not more than 325°F when subjected to a 10-minute fire test using the standard time-temperature curve as set forth in Standard Methods of Fire Tests of Building Construction and Materials, NFPA 251-1969. All joints and seams shall remain tight and the door shall remain securely closed during the fire test. Cabinets shall be labeled "Flammable—Keep fire away."

(i) Metal cabinets constructed in the following manner shall be deemed to be in compliance. The bottom, top, door, and sides of cabinet shall be at least No. 18 gage sheet iron and double walled with 1 1/2-inch air space. Joints shall be riveted, welded or made tight by some equally effective means. The door shall be provided with a three-point lock, and the door sill shall be raised at least 2 inches above the bottom of the cabinet.

(ii) Wooden cabinets constructed in the following manner shall be deemed in compliance. The bottom, sides, and top shall be constructed of an approved grade of plywood at least 1 inch in thickness, which shall not break down or delaminate under fire conditions. All joints shall be rabbetted and shall be fastened in two directions with flathead wood-screws. When more than one door is used, there shall be a rabbetted overlap of not less than 1 inch. Hinges shall be mounted in such a manner as not to lose their holding capacity due to loosening or burning out of the screws when subjected to the fire test.

(4) Design and construction of inside storage rooms.

(a) Construction. Inside storage rooms shall be constructed to meet the required fire-resistive rating for their use. Such construction shall comply with the test specifications set forth in Standard Methods of Fire Tests of Building Construction and Materials, NFPA 251-1969. Where an automatic sprinkler system is provided, the system shall be

designed and installed in an acceptable manner. Openings to other rooms or buildings shall be provided with noncombustible liquid-tight raised sills or ramps at least 4 inches in height, or the floor in the storage area shall be at least 4 inches below the surrounding floor. Openings shall be provided with approved self-closing fire doors. The room shall be liquid tight where the walls join the floor. A permissible alternate to the sill or ramp is an open-grated trench inside of the room which drains to a safe location. Where other portions of the building or other properties are exposed, windows shall be protected as set forth in the Standard for Fire Doors and Windows, NFPA No. 80-1968, for Class E or F openings. Wood at least 1 inch nominal thickness may be used for shelving, racks, dunnage, scuffboards, floor overlay, and similar installations.

(b) Rating and capacity. Storage in inside storage rooms shall comply with Table H-13.

TABLE H-13

STORAGE IN INSIDE ROOMS

Fire protection* provided	Fire resistance	Maximum size	Total allowable quantities (gals./sq. Ft./floor area)
Yes	2 hours	500 sq.ft.	10
No	2 hours	500 sq.ft.	4
Yes	1 hour	150 sq.ft.	5
No	1 hour	150 sq.ft.	2

*Fire protection system shall be sprinkler, water spray, carbon dioxide, or other system.

(c) Wiring. Electrical wiring and equipment within inside storage rooms used to store Class I liquids shall comply with the provisions of chapter 296-24 WAC Part L for Class I, Division 2 locations. For inside storage rooms used to store Class II and III liquids the pertinent provisions chapter 296-24 WAC Part L apply.

(d) Ventilation. Every inside storage room shall be provided with either a gravity or a mechanical exhaust ventilation system. Such system shall be designed to provide for a complete change of air within the room at least six times per hour. If a mechanical exhaust system is used, it shall be controlled by a switch located outside of the door. The ventilating equipment and any lighting fixtures shall be operated by the same switch. A pilot light shall be installed adjacent to the switch if Class I flammable liquids are dispensed within the room. Where gravity ventilation is provided, the fresh air intake, as well as the exhaust outlet from the room, shall be on the exterior of the building in which the room is located.

(e) Storage in inside storage rooms. In every inside storage room there shall be maintained one clear aisle at least 3 feet wide. Containers over 30 gallons capacity shall not be stacked one upon the other. Dispensing shall be by approved pump or self-closing faucet only.

(5) Storage inside building.

(a) Egress. Flammable or combustible liquids, including stock for sale, shall not be stored so as to limit use of exits, stairways, or areas normally used for the safe egress of people.

(b) Containers. The storage of flammable or combustible liquids in containers or portable tanks shall comply with (4)(c) through (e) of this section.

(c) Office occupancies. Storage shall be prohibited except that which is required for maintenance and operation of building and operation of equipment. Such storage shall be kept in closed metal containers stored in a storage cabinet or in safety cans or in an inside storage room not having a door that opens into that portion of the building used by the public.

(d) Mercantile occupancies and other retail stores.

(i) In rooms or areas accessible to the public, storage shall be limited to quantities needed for display and normal merchandising purposes but shall not exceed 2 gallons per square foot of gross floor area. The gross floor area used for computing the maximum quantity permitted shall be considered as that portion of the store actually being used for merchandising flammable and combustible liquids.

(ii) Where the aggregate quantity of additional stock exceeds 60 gallons of Class IA, or 120 gallons of Class IB, or 180 gallons of Class IC, or 240 gallons of Class II, or 500 gallons of Class III liquids, or any combination of Class I and Class II liquids exceeding 240 gallons, it shall be stored in a room or portion of the building that complies with the construction provisions for an inside storage room as prescribed in (4) of this section. For water miscible liquids, these quantities may be doubled.

(iii) Containers in a display area shall not be stacked more than 3 feet or two containers high, whichever is the greater, unless the stacking is done on fixed shelving or is otherwise satisfactorily secured.

(iv) Shelving shall be of stable construction, of sufficient depth and arrangement such that containers displayed thereon shall not be easily displaced.

(v) Leaking containers shall be removed to a storage room or taken to a safe location outside the building and the contents transferred to an undamaged container.

(e) General purpose public warehouses. Storage shall be in accordance with Table H-14 or H-15 and in buildings or in portions of such buildings cut off by standard firewalls. Material creating no fire exposure hazard to the flammable or combustible liquids may be stored in the same area.

TABLE H-14

INDOOR CONTAINER STORAGE

Class liquid	Storage level	Protected storage maximum per pile		Unprotected storage maximum per pile	
		Gal.	Ht.	Gal.	Ht.
IA	Ground and upper floors	2,750 (50)	3 ft. (1)	660 (12)	3 ft. (1)
	Basement	Not permitted		Not permitted	
IB	Ground and upper floors	5,500 (100)	6 ft. (2)	1,375 (25)	3 ft. (1)
	Basement	Not permitted		Not permitted	
IC	Ground and upper floors	16,500 (300)	6 ft (2)	4,125 (75)	3 ft. (1)
	Basement	Not permitted		Not permitted	

Class liquid	Storage level	Protected storage maximum per pile		Unprotected storage maximum per pile	
		Gal.	Ht.	Gal.	Ht.
II	Ground and upper floors	16,500 (300)	9 ft. (3)	4,125 (75)	9 ft. (3)
	Basement	5,500 (100)	9 ft. (3)	Not permitted	
III	Ground and upper floors	55,000 (1,000)	15 ft. (5)	13,750 (250)	12 ft. (4)
	Basement	8,250 (450)	9 ft. (3)	Not permitted	

Note 1: When 2 or more classes of materials are stored in a single pile, the maximum gallonage permitted in that pile shall be the smallest of the 2 or more separate maximum gallonages.

Note 2: Aisles shall be provided so that no container is more than 12 ft. from an aisle. Main aisles shall be at least 8 ft. wide and side aisles at least 4 ft. wide.

(Numbers in parentheses indicate corresponding number of 55-gal. drums.)

Note 3: Each pile shall be separated from each other by at least 4 ft.

TABLE H-15

INDOOR PORTABLE TANK STORAGE

Class liquid	Storage level	Protected storage maximum per pile		Unprotected storage maximum per pile	
		Gal.	Ht.	Gal.	Ht.
IA	Ground and upper floors	Not permitted		Not permitted	
	Basement	Not permitted		Not permitted	
IB	Ground and upper floors	20,000	7ft.	2,000	7 ft.
	Basement	Not permitted		Not permitted	
IC	Ground and upper floors	40,000	14 ft	5,500	7 ft.
	Basement	Not permitted		Not permitted	
II	Ground and upper floors	40,000	14 ft.	5,500	7 ft.
	Basement	20,000	7 ft.	Not permitted	
III	Ground and upper floors	60,000	14 ft.	22,000	7 ft.
	Basement	20,000	7 ft.	Not permitted	

Note 1: When 2 or more classes of materials are stored in a single pile, the maximum gallonage permitted in that pile shall be the smallest of the 2 or more separate maximum gallonages.

Note 2: Aisles shall be provided so that no portable tank is more than 12 ft. from an aisle. Main aisles shall be at least 8 ft. wide and side aisles at least 4 ft. wide.

Note 3: Each pile shall be separated from each other by at least 4 ft.

(f) Flammable and combustible liquid warehouses or storage buildings.

(i) If the storage building is located 50 feet or less from a building or line of adjoining property that may be built upon, the exposing wall shall be a blank wall having a fire-resistance rating of at least 2 hours.

(ii) The total quantity of liquids within a building shall not be restricted, but the arrangement of storage shall comply with Table H-14 or H-15.

(iii) Containers in piles shall be separated by pallets or dunnage where necessary to provide stability and to prevent excessive stress on container walls.

(iv) Portable tanks stored over one tier high shall be designed to nest securely, without dunnage and adequate materials handling equipment shall be available to handle tanks safely at the upper tier level.

(v) No pile shall be closer than 3 feet to the nearest beam, chord, girder, or other obstruction, and shall be 3 feet below sprinkler deflectors or discharge orifices of water spray, or other overhead fire protection systems.

(vi) Aisles of at least 3 feet wide shall be provided where necessary for reasons of access to doors, windows or standpipe connections.

(6) Storage outside buildings.

(a) General. Storage outside buildings shall be in accordance with Table H-16 or H-17, and (6)(b) and (d) of this section.

TABLE H-16

OUTDOOR CONTAINER STORAGE

1 Class	2 Maximum per pile (see note 1)	3 Distance between piles (see note 2)	4 Distance to property line that can be built upon (see notes 3 & 4)	5 Distance to street, alley, public way (see note 4)
	gal.	ft.	ft.	ft.
IA	1,100	5	20	10
IB	2,200	5	20	10
IC	4,400	5	20	10
II	8,800	5	10	5
III	22,000	5	10	5

Note 1: When 2 or more classes of materials are stored in a single pile, the maximum gallonage in that pile shall be the smallest of the 2 or more separate gallonages.

Note 2: Within 200 ft. of each container, there shall be 12-ft. wide access way to permit approach of fire control apparatus.

Note 3: The distances listed apply to properties that have protection for exposures as defined. If there are exposures, and such protection for exposures does not exist, the distances in column 4 shall be doubled.

Note 4: When total quantity stored does not exceed 50 percent of maximum per pile, the distances in columns 4 and 5 may be reduced 50 percent, but not less than 3 ft.

(b) Maximum storage. A maximum of 1,100 gallons of flammable or combustible liquids may be located adjacent to buildings located on the same premises and under the same management provided the provisions of (6)(b)(i) and (ii) are complied with.

(i) The building shall be a one-story building devoted principally to the handling and storing of flammable or combustible liquids or the building shall have 2 hour fire-resistive exterior walls having no opening within 10 feet of such storage.

(ii) Where quantity stored exceeds 1,100 gallons, or provisions of (6)(b)(i) cannot be met, a minimum distance of 10 feet between buildings and nearest container of flammable or combustible liquid shall be maintained.

TABLE H-17

OUTDOOR PORTABLE TANK STORAGE

1 Class	2 Maximum per pile	3 Distance between piles	4 Distance to property line that can be built upon	5 Distance to street, alley, public way
	gal.	ft.	ft.	ft.
IA	2,200	5	20	10
IB	4,400	5	20	10
IC	8,800	5	20	10
II	17,600	5	10	5
III	44,000	5	10	5

Note 1: When 2 or more classes of materials are stored in a single pile, the maximum gallonage in that pile shall be the smallest of the 2 or more separate gallonages.

Note 2: Within 200 ft. of each portable tank, there shall be a 12-ft. wide access way to permit approach of fire control apparatus.

Note 3: The distances listed apply to properties that have protection for exposures as defined. If there are exposures, and such protection for exposures does not exist, the distances in column 4 shall be doubled.

Note 4: When total quantity stored does not exceed 50 percent of maximum per pile, the distances in columns 4 and 5 may be reduced 50 percent, but not less than 3 ft.

(c) Spill containment. The storage area shall be graded in a manner to divert possible spills away from buildings or other exposures or shall be surrounded by a curb at least 6 inches high. When curbs are used, provisions shall be made for draining of accumulations of ground or rain water or spills of flammable or combustible liquids. Drains shall terminate at a safe location and shall be accessible to operation under fire conditions.

(d) Security. The storage area shall be protected against tampering or trespassers where necessary and shall be kept free of weeds, debris and other combustible material not necessary to the storage.

(7) Fire control.

(a) Extinguishers. Suitable fire control devices, such as small hose or portable fire extinguishers, shall be available at locations where flammable or combustible liquids are stored.

(i) At least one portable fire extinguisher having a rating of not less than 12-B units shall be located outside of, but not more than 10 feet from, the door opening into any room used for storage.

(ii) At least one portable fire extinguisher having a rating of not less than 12-B units must be located not less than 10 feet, nor more than 25 feet, from any Class I or Class II liquid storage area located outside of a storage room but inside a building.

Note: For additional requirements relating to portable fire extinguishers see WAC 296-800-300.

(b) Sprinklers. When sprinklers are provided, they shall be installed in accordance with chapter 296-24 WAC, Part G-3.

(c) Open flames and smoking. Open flames and smoking shall not be permitted in flammable or combustible liquid storage areas.

(d) Water reactive materials. Materials which will react with water shall not be stored in the same room with flammable or combustible liquids.

[Statutory Authority: RCW 49.17.010, 49.17.040, 49.17.050, 49.17.060. 04-18-080, § 296-24-33009, filed 8/31/04, effective 11/1/04. Statutory Authority: RCW 49.17.010, [49.17].040, and [49.17].050. 01-17-033, § 296-24-33009, filed 8/8/01, effective 9/1/01. Statutory Authority: Chapter 49.17 RCW. 94-15-096 (Order 94-07), § 296-24-33009, filed 7/20/94, effective 9/20/94; 91-24-017 (Order 91-07), § 296-24-33009, filed 11/22/91, effective 12/24/91. Statutory Authority: RCW 49.17.040 and 49.17.050. 85-10-004 (Order 85-09), § 296-24-33009, filed 4/19/85; Order 76-6, § 296-24-33009, filed 3/1/76; Order 74-27, § 296-24-33009, filed 5/7/74; Order 73-5, § 296-24-33009, filed 5/9/73 and Order 73-4, § 296-24-33009, filed 5/7/73.]

WAC 296-24-33011 Industrial plants. (1) Scope.

(a) Application. This section shall apply to those industrial plants where:

(i) The use of flammable or combustible liquids is incidental to the principal business, or

(ii) Where flammable or combustible liquids are handled or used only in unit physical operations such as mixing, drying, evaporating, filtering, distillation, and similar operations which do not involve chemical reaction. This section shall not apply to chemical plants, refineries or distilleries.

(b) Exceptions. Where portions of such plants involve chemical reactions such as oxidation, reduction, halogenation, hydrogenation, alkylation, polymerization, and other chemical processes, those portions of the plant shall be in accordance with WAC 296-24-33017.

(2) Incidental storage or use of flammable and combustible liquids.

(a) Application. This shall be applicable to those portions of an industrial plant where the use and handling of flammable or combustible liquids is only incidental to the principal business, such as automobile assembly, construction of electronic equipment, furniture manufacturing, or other similar activities.

(b) Containers. Flammable or combustible liquids shall be stored in tanks or closed containers.

(i) Except as provided in (b)(ii) and (iii) of this subsection all storage shall comply with WAC 296-24-33009 (3) or (4).

(A) When the only operation involved is the storage of flammables in containers or tanks that are closed and remain closed throughout the storage, WAC 296-24-33009(5) and tables H-14 and H-15 will apply.

(B) When the procedure involved is mixing, transferring, or other exposure of liquids to vaporization through operational procedures in which containers or tanks do not remain closed in the storage area, WAC 296-24-33009(4) and table H-13 shall be used to determine permissible quantities.

(ii) The quantity of liquid that may be located outside of an inside storage room or storage cabinet in a building or in any one fire area of a building shall not exceed:

(A) Twenty-five gallons of Class IA liquids in containers.

(B) One hundred twenty gallons of Class IB, IC, II, or III liquids in containers.

(C) Six hundred sixty gallons of Class IB, IC, II, or III liquids in a single portable tank.

(iii) Where large quantities of flammable or combustible liquids are necessary, storage may be in tanks which shall comply with the applicable requirements of WAC 296-24-33005.

(c) Separation and protection. Areas in which flammable or combustible liquids are transferred from one tank or con-

tainer to another container shall be separated from other operations in the building by adequate distance or by construction having adequate fire resistance. Drainage or other means shall be provided to control spills. Adequate natural or mechanical ventilation shall be provided.

(d) Handling liquids at point of final use.

(i) Flammable liquids shall be kept in covered containers when not actually in use.

(ii) Where flammable or combustible liquids are used or handled, except in closed containers, means shall be provided to dispose promptly and safely of leakage or spills.

(iii) Class I liquids may be used only where there are no open flames or other sources of ignition within the possible path of vapor travel.

(iv) Flammable or combustible liquids shall be drawn from or transferred into vessels, containers, or portable tanks within a building only through a closed piping system, from safety cans, by means of a device drawing through the top, or from a container or portable tanks by gravity through an approved self-closing valve. Transferring by means of air pressure on the container or portable tanks shall be prohibited.

(3) Unit physical operations.

(a) Application. This subsection (3) shall be applicable in those portions of industrial plants where flammable or combustible liquids are handled or used in unit physical operations such as mixing, drying, evaporating, filtering, distillation, and similar operations which do not involve chemical change. Examples are plants compounding cosmetics, pharmaceuticals, solvents, cleaning fluids, insecticides, and similar types of activities.

(b) Location. Industrial plants shall be located so that each building or unit of equipment is accessible from at least one side for firefighting and fire control purposes. Buildings shall be located with respect to lines of adjoining property which may be built upon as set forth in WAC 296-24-33017 (2)(a) and (b) except that the blank wall referred to in WAC 296-24-33017 (2)(b) shall have a fire resistance rating of at least two hours.

(c) Chemical processes. Areas where unstable liquids are handled or small scale unit chemical processes are carried on shall be separated from the remainder of the plant by a fire wall of two-hour minimum fire resistance rating.

(d) Drainage.

(i) Emergency drainage systems shall be provided to direct flammable or combustible liquid leakage and fire protection water to a safe location. This may require curbs, scuppers, or special drainage systems to control the spread of fire; see WAC 296-24-33005 (2)(g)(ii).

(ii) Emergency drainage systems, if connected to public sewers or discharged into public waterways, shall be equipped with traps or separators.

(iii) The industrial plant shall be designed and operated to prevent the normal discharge of flammable or combustible liquids into public waterways, public sewers, or adjoining property.

(e) Ventilation.

(i) Areas as defined in subsection (1)(a) of this section using Class I liquids shall be ventilated at a rate of not less than one cubic foot per minute per square foot of solid floor area. This shall be accomplished by natural or mechanical ventilation with discharge or exhaust to a safe location outside of the building. Provision shall be made for introduction of makeup air in such a manner as not to short circuit the ventilation. Ventilation shall be arranged to include all floor areas or pits where flammable vapors may collect.

(ii) Equipment used in a building and the ventilation of the building shall be designed so as to limit flammable vapor-air mixtures under normal operating conditions to the interior of equipment, and to not more than five feet from equipment which exposes Class I liquids to the air. Examples of such equipment are dispensing stations, open centrifuges, plate and frame filters, open vacuum filters, and surfaces of open equipment.

(f) Storage and handling. The storage, transfer, and handling of liquid shall comply with WAC 296-24-33017(4).

(4) Tank vehicle and tank car loading and unloading.

Tank vehicle and tank car loading or unloading facilities shall be separated from aboveground tanks, warehouses, other plant buildings or nearest line of adjoining property which may be built upon by a distance of twenty-five feet for Class I liquids and fifteen feet for Class II and Class III liquids measured from the nearest position of any fill stem. Buildings for pumps or shelters for personnel may be a part of the facility. Operations of the facility shall comply with the appropriate portions of WAC 296-24-33013(3).

(5) Fire control.

(a) Portable and special equipment. Portable fire extinguishment and control equipment shall be provided in such quantities and types as are needed for the special hazards of operation and storage.

(b) Water supply. Water shall be available in volume and at adequate pressure to supply water hose streams, foam-producing equipment, automatic sprinklers, or water spray systems as the need is indicated by the special hazards of operation, dispensing and storage.

(c) Special extinguishers. Special extinguishing equipment such as that utilizing foam, inert gas, or dry chemical shall be provided as the need is indicated by the special hazards of operation dispensing and storage.

(d) Special hazards. Where the need is indicated by special hazards of operation, flammable or combustible liquid processing equipment, major piping, and supporting steel shall be protected by approved water spray systems, deluge systems, approved fire-resistant coatings, insulation, or any combination of these.

(e) Maintenance. All plant fire protection facilities shall be adequately maintained and periodically inspected and tested to make sure they are always in satisfactory operating condition, and they will serve their purpose in time of emergency.

(6) Sources of ignition.

(a) General. Adequate precautions shall be taken to prevent the ignition of flammable vapors. Sources of ignition include but are not limited to open flames; lightning; smoking; cutting and welding; hot surfaces; frictional heat; static, electrical and mechanical sparks; spontaneous ignition, including heat-producing chemical reactions; and radiant heat.

(b) Grounding. Class I liquids shall not be dispensed into containers unless the nozzle and container are electrically interconnected. Where the metallic floorplate on which the

container stands while filling is electrically connected to the fill stem or where the fill stem is bonded to the container during filling operations by means of a bond wire, the provisions of these standards shall be deemed to have been complied with.

(7) Electrical.

(a) All electrical wiring and equipment shall be installed according to chapter 296-24 WAC Part L.

(b) Locations where flammable vapor-air mixtures may exist under normal operations shall be classified Class I, Division 1 according to the requirements of chapter 296-24 WAC Part L. For those pieces of equipment installed in accordance with the requirements of subsection (3)(e)(ii) of this section, the Division 1 area shall extend five feet in all directions from all points of vapor liberation. All areas within pits shall be classified Division 1 if any part of the pit is within a Division 1 or 2 classified area, unless the pit is provided with mechanical ventilation.

(c) Locations where flammable vapor-air mixtures may exist under abnormal conditions and for a distance beyond Division 1 locations shall be classified Division 2 according to the requirements of chapter 296-24 WAC Part L. These locations include an area within twenty feet horizontally, three feet vertically beyond a Division 1 area, and up to three feet above floor or grade level within twenty-five feet, if indoors, or ten feet if outdoors, from any pump, bleeder, withdrawal fitting, meter, or similar device handling Class I liquids. Pits provided with adequate mechanical ventilation within a Division 1 or 2 area shall be classified Division 2. If Class II or Class III liquids only are handled, then ordinary electrical equipment is satisfactory though care shall be used in locating electrical apparatus to prevent hot metal from falling into open equipment.

(d) Where the provisions of (a), (b), and (c) of this subsection require the installation of electrical equipment suitable for Class I, Division 1 or Division 2 locations, ordinary electrical equipment including switchgear may be used if installed in a room or enclosure which is maintained under positive pressure with respect to the hazardous area. Ventilation makeup air shall be uncontaminated by flammable vapors.

(8) Repairs to equipment. Hot work, such as welding or cutting operations, use of spark-producing power tools, and chipping operations shall be permitted only under supervision of an individual in responsible charge. The individual in responsible charge shall make an inspection of the area to be sure that it is safe for the work to be done and that safe procedures will be followed for the work specified.

(9) Housekeeping.

(a) General. Maintenance and operating practices shall be in accordance with established procedures which will tend to control leakage and prevent the accidental escape of flammable or combustible liquids. Spills shall be cleaned up promptly.

(b) Access. Adequate aisles shall be maintained for unobstructed movement of personnel and so that fire protection equipment can be brought to bear on any part of flammable or combustible liquid storage, use, or any unit physical operation.

(c) Waste and residue. Combustible waste material and residues in a building or unit operating area shall be kept to a minimum, stored in covered metal receptacles and disposed of daily.

(d) Clear zone. Ground area around buildings and unit operating areas shall be kept free of weeds, trash, or other unnecessary combustible materials.

[Statutory Authority: Chapter 49.17 RCW. 94-15-096 (Order 94-07), § 296-24-33011, filed 7/20/94, effective 9/20/94; 91-24-017 (Order 91-07), § 296-24-33011, filed 11/22/91, effective 12/24/91; 89-11-035 (Order 89-03), § 296-24-33011, filed 5/15/89, effective 6/30/89. Statutory Authority: RCW 49.17.040 and 49.17.050. 85-10-004 (Order 85-09), § 296-24-33011, filed 4/19/85; Order 76-6, § 296-24-33011, filed 3/1/76; Order 73-5, § 296-24-33011, filed 5/9/73 and Order 73-4, § 296-24-33011, filed 5/7/73.]

WAC 296-24-33013 Bulk plants. (1) Storage.

(a) Class I liquids. Class I liquids shall be stored in closed containers, or in storage tanks above ground outside of buildings, or underground in accordance with WAC 296-24-33005.

(b) Class II and III liquids. Class II and Class III liquids shall be stored in containers, or in tanks within buildings or above ground outside of buildings, or underground in accordance with WAC 296-24-33005.

(c) Piling containers. Containers of flammable or combustible liquids when piled one upon the other shall be separated by dunnage sufficient to provide stability and to prevent excessive stress on container walls. The height of the pile shall be consistent with the stability and strength of containers.

(2) Buildings.

(a) Exits. Rooms in which flammable or combustible liquids are stored or handled by pumps shall have exit facilities arranged to prevent occupants from being trapped in the event of fire.

(b) Heating. Rooms in which Class I liquids are stored or handled shall be heated only by means not constituting a source of ignition, such as steam or hot water. Rooms containing heating appliances involving sources of ignition shall be located and arranged to prevent entry of flammable vapors.

(c) Ventilation.

(i) Ventilation shall be provided for all rooms, buildings, or enclosures in which Class I liquids are pumped or dispensed. Design of ventilation systems shall take into account the relatively high specific gravity of the vapors. Ventilation may be provided by adequate openings in outside walls at floor level unobstructed except by louvers or course screens. Where natural ventilation is inadequate, mechanical ventilation shall be provided.

(ii) Class I liquids shall not be stored or handled within a building having a basement or pit into which flammable vapors may travel, unless such area is provided with ventilation designed to prevent the accumulation of flammable vapors therein.

(iii) Containers of Class I liquids shall not be drawn from or filled within buildings unless provision is made to prevent the accumulation of flammable vapors in hazardous concentrations. Where mechanical ventilation is required, it shall be kept in operation while flammable liquids are being handled.

(3) Loading and unloading facilities.

(a) Separation. Tank vehicle and tank car loading or unloading facilities shall be separated from aboveground tanks, warehouses, other plant buildings or nearest line of

adjoining property that may be built upon by a distance of 25 feet for Class I liquids and 15 feet for Class II and Class III liquids measured from the nearest position of any fill spout. Buildings for pumps or shelters for personnel may be a part of the facility.

(b) Class restriction. Equipment such as piping, pumps, and meters used for the transfer of Class I liquids between storage tanks and the fill stem of the loading rack shall not be used for the transfer of Class II or Class III liquids.

(c) Valves. Valves used for the final control for filling tank vehicles shall be of the self-closing type and manually held open except where automatic means are provided for shutting off the flow when the vehicle is full or after filling of a preset amount.

(d) Static protection.

(i) Bonding facilities for protection against static sparks during the loading of tank vehicles through open domes shall be provided:

(A) Where Class I liquids are loaded, or

(B) Where Class II or Class III liquids are loaded into vehicles which may contain vapors from previous cargoes of Class I liquids.

(ii) Protection as required in (3)(d)(i) of this section shall consist of a metallic bond wire permanently electrically connected to the fill stem or to some part of the rack structure in electrical contact with the fill stem. The free end of such wire shall be provided with a clamp or equivalent device for convenient attachment to some metallic part in electrical contact with the cargo tank of the tank vehicle.

(iii) Such bonding connection shall be made fast to the vehicle or tank before dome covers are raised and shall remain in place until filling is completed and all dome covers have been closed and secured.

(iv) Bonding as specified in (3)(d)(i), (ii) and (iii) of this section is not required:

(A) Where vehicles are loaded exclusively with products not having a static accumulating tendency, such as asphalt, most crude oils, residual oils, and water soluble liquids;

(B) Where no Class I liquids are handled at the loading facility and the tank vehicles loaded are used exclusively for Class II and Class III liquids; and

(C) Where vehicles are loaded or unloaded through closed bottom or top connections.

(v) Filling through open domes into the tanks of tank vehicles or tank cars, that contain vapor-air mixtures within the flammable range or where the liquid being filled can form such a mixture, shall be by means of a downspout which extends near the bottom of the tank. This precaution is not required when loading liquids which are nonaccumulators of static charges.

(e) Stray currents. Tank car loading facilities where Class I liquids are loaded through open domes shall be protected against stray currents by bonding the pipe to at least one rail and to the rack structure if of metal. Multiple lines entering the rack area shall be electrically bonded together. In addition, in areas where excessive stray currents are known to exist, all pipe entering the rack area shall be provided with insulating sections to electrically isolate the rack piping from the pipelines. No bonding between the tank car and the rack or piping is required during either loading or unloading of Class II or III liquids.

(f) Container filling facilities. Class I liquids shall not be dispensed into containers unless the nozzle and container are electrically interconnected. Where the metallic floorplate on which the container stands while filling is electrically connected to the fill stem or where the fill stem is bonded to the container during filling operations by means of a bond wire, the provisions of these standards shall be deemed to have been complied with.

(4) Wharves.

(a) Definition, application. The term wharf shall mean any wharf, pier, bulkhead, or other structure over or contiguous to navigable water used in conjunction with a bulk plant, the primary function of which is the transfer of flammable or combustible liquid cargo in bulk between the bulk plant and any tank vessel, ship, barge, lighter boat, or other mobile floating craft; and this subparagraph shall apply to all such installations except marine service stations as covered in WAC 296-24-33015.

(b) Package cargo. Package cargo of flammable and combustible liquids, including full and empty drums, bulk fuel, and stores may be handled over a wharf and at such times and places as may be agreed upon by the wharf superintendent and the senior deck officer on duty.

(c) Location. Wharves at which flammable or combustible liquid cargoes are to be transferred in bulk quantities to or from tank vessels shall be at least 100 feet from any bridge over a navigable waterway, or from an entrance to or superstructure of any vehicular or railroad tunnel under a waterway. The termination of the wharf loading or unloading fixed piping shall be at least 200 feet from a bridge or from an entrance to or superstructure of a tunnel.

(d) Design and construction. Substructure and deck shall be substantially designed for the use intended. Deck may employ any material which will afford the desired combination of flexibility, resistance to shock, durability, strength, and fire resistance. Heavy timber construction is acceptable.

(e) Tanks. Tanks used exclusively for ballast water or Class II or Class III liquids may be installed on suitably designed wharves.

(f) Pumps. Loading pumps capable of building up pressures in excess of the safe working pressure of cargo hose or loading arms shall be provided with bypasses, relief valves, or other arrangement to protect the loading facilities against excessive pressure. Relief devices shall be tested at not more than yearly intervals to determine that they function satisfactorily at the pressure at which they are set.

(g) Hoses and couplings. All pressure hoses and couplings shall be inspected at intervals appropriate to the service. The hose and couplings shall be tested with the hose extended and using the "inservice maximum operating pressures." Any hose showing material deteriorations, signs of leakage, or weakness in its carcass or at the couplings shall be withdrawn from service and repaired or discarded.

(h) Piping and fittings. Piping, valves, and fittings shall be in accordance with WAC 296-24-33007 with the following exceptions and additions:

(i) Flexibility of piping shall be assured by appropriate layout and arrangement of piping supports so that motion of the wharf structure resulting from wave action, currents, tides, or the mooring of vessels will not subject the pipe to repeated strain beyond the elastic limit.

(ii) Pipe joints depending upon the friction characteristics of combustible materials or grooving of pipe ends for mechanical continuity of piping shall not be used.

(iii) Swivel joints may be used in piping to which hoses are connected, and for articulated swivel-joint transfer systems, provided that the design is such that the mechanical strength of joint will not be impaired if the packing material should fail, as by exposure to fire.

(iv) Piping systems shall contain a sufficient number of valves to operate the system properly and to control the flow of liquid in normal operation and in the event of physical damage.

(v) In addition to the requirements of (4)(h)(iv), each line conveying flammable liquids leading to a wharf shall be provided with a readily accessible block valve located on shore near the approach to the wharf and outside of any diked area. Where more than one line is involved, the valves shall be grouped in one location.

(vi) Means of easy access shall be provided for cargo line valves located below the wharf deck.

(vii) Pipelines on flammable or combustible liquids wharves shall be adequately bonded and grounded. If excessive stray currents are encountered, insulating points shall be installed. Bonding and grounding connections on all pipelines shall be located on wharfside of hose-riser insulating flanges, if used, and shall be accessible for inspection.

(viii) Hose or articulated swivel-joint pipe connections used for cargo transfer shall be capable of accommodating the combined effects of change in draft and maximum tidal range, and mooring lines shall be kept adjusted to prevent the surge of the vessel from placing stress on the cargo transfer system.

(ix) Hose shall be supported so as to avoid kinking and damage from chafing.

(i) Fire protection. Suitable portable fire extinguishers with a rating of not less than 12-BC shall be located with 75 feet of those portions of the facility where fires are likely to occur, such as hose connections, pumps, and separator tanks.

(i) Where piped water is available, ready-connected fire hose in size appropriate for the water supply shall be provided so that manifolds where connections are made and broken can be reached by at least one hose stream.

(ii) Material shall not be placed on wharves in such a manner as to obstruct access to firefighting equipment, or important pipeline control valves.

(iii) Where the wharf is accessible to vehicle traffic, an unobstructed roadway to the shore end of the wharf shall be maintained for access of firefighting apparatus.

(j) Operations control. Loading or discharging shall not commence until the wharf superintendent and officer in charge of the tank vessel agree that the tank vessel is properly moored and all connections are properly made. Mechanical work shall not be performed on the wharf during cargo transfer, except under special authorization by a delegated person or the delegated persons authorized representative based on a review of the area involved, methods to be employed, and precaution necessary.

(5) Electrical equipment.

(a) Application. This subsection shall apply to areas where Class I liquids are stored or handled. For areas where Class II or Class III liquids only are stored or handled, the electrical equipment may be installed according to chapter 296-24 WAC Part L for ordinary locations.

(b) Conformance. All electrical equipment and wiring shall be of a type specified by and shall be installed according to chapter 296-24 WAC Part L.

(c) Classification. So far as it applies Table H-18 shall be used to delineate and classify hazardous areas for the purpose of installation of electrical equipment under normal circumstances. In Table H-18 a classified area shall not extend beyond an unpierced wall, roof, or other solid partition. The area classifications listed shall be based on the premise that the installation meets the applicable requirements of this section in all respects.

TABLE H-18
ELECTRICAL EQUIPMENT HAZARDOUS AREAS—BULK PLANTS

Location	Class I Group D division	Extent of classified area
Tank vehicle and tank car:[1]		
Loading through open dome	1	Within 3 feet of edge of dome, extending in all directions.
	2	Area between 3 feet and 5 feet from edge of dome, extending in all directions.
Loading through bottom connections with atmospheric venting	1	Within 3 feet of point of venting to atmosphere, extending in all directions.
	2	Area between 3 feet and 5 feet from point of venting to atmosphere, extending in all directions. Also up to 18 inches above grade within a horizontal radius of 10 feet from point of loading connection.
Loading through closed dome with atmospheric venting	1	Within 3 feet of open end of vent, extending in all directions.
	2	Area between 3 feet and 5 feet from open end of vent, extending in all directions. Also within 3 feet of edge of dome, extending in all directions.
Loading through closed dome with vapor recovery	2	Within 3 feet of point of connection of both fill and vapor lines, extending in all directions.

Location	Class I Group D division	Extent of classified area
Bottom loading with vapor recovery or any bottom unloading	2	Within 3 feet of point of connections extending in all directions. Also up to 18 inches above grade within a horizontal radius of 10 feet from point of connection.
Drum and container filling: Outdoors, or indoors with adequate ventilation	1	Within 3 feet of vent and fill opening, extending in all directions.
	2	Area between 3 feet and 5 feet from vent or fill opening, extending in all directions. Also up to 18 inches above floor or grade level within a horizontal radius of 10 feet from vent or fill opening.
Outdoors, or indoors with adequate ventilation	1	Within 3 feet of vent and fill opening, extending in all directions.
	2	Area between 3 feet and 5 feet from vent or fill opening, extending in all directions. Also up to 18 inches above floor or grade level within a horizontal radius of 10 feet from vent or fill opening.
Tank—Aboveground:		
Shell, ends, or roof and dike area	2	Within 10 feet from shell, ends, or roof of tank, area inside dikes to level of top of dike.
Vent	1	Within 5 feet of open end of vent, extending in all directions.
	2	Area between 5 feet and 10 feet from open end of vent, extending in all directions.
Floating roof	1	Area above the roof and within the shell.
Pits:		
Without mechanical ventilation	1	Entire area within pit if any part is within a Division 1 or 2 classified area.
With mechanical ventilation	2	Entire area within pit if any part is within a Division 1 or 2 classified area.
Containing valves, fittings or piping, and not within a Division 1 or 2 classified area	2	Entire pit.
Pumps, bleeders, withdrawal fittings, meters and similar devices:		
Indoors	2	Within 5 feet of any edge of such devices, extending in all directions. Also up to 3 feet above floor or grade level within 25 feet horizontally from any edge of such devices.
Outdoors	2	Within 3 feet of any edge of such devices, extending in all directions. Also up to 18 inches above grade level within 10 feet horizontally from any edge of such devices.
Storage and repair garage for tank vehicles	1	All pits or spaces below floor level.
	2	Area up to 18 inches above floor or grade level for entire storage or repair garage.
Drainage ditches, separators, impounding basins	2	Area up to 18 inches above ditch, separator or basin. Also up to 18 inches above grade within 15 feet horizontally from any edge.
Garages for other than tank vehicles	Ordinary	If there is any opening to these rooms within the extent of an outdoor classified area, the entire room shall be classified the same as the area classification at the point of the opening.
Outdoor drum storage	Ordinary	
Indoor warehousing where there is no flammable liquid transfer	Ordinary	If there is any opening to these rooms within the extent of an indoor classified area, the room shall be classified the same as if the wall, curb or partition did not exist.
Office and rest rooms	Ordinary	

[1] When classifying the extent of the area, consideration shall be given to the fact that tank cars or tank vehicles may be spotted at varying points. Therefore, the extremities of the loading or unloading positions shall be used.

(6) Sources of ignition. Class I liquids shall not be handled, drawn, or dispensed where flammable vapors may reach a source of ignition. Smoking shall be prohibited

except in designated localities. "No smoking" signs shall be conspicuously posted where hazard from flammable liquid vapors is normally present.

(7) Drainage and waste disposal. Provision shall be made to prevent flammable or combustible liquids which may be spilled at loading or unloading points from entering public sewers and drainage systems, or natural waterways. Connection to such sewers, drains, or waterways by which flammable or combustible liquids might enter shall be provided with separator boxes or other approved means whereby such entry is precluded. Crankcase drainings and flammable or combustible liquids shall not be dumped into sewers, but shall be stored in tanks or tight drums outside of any building until removed from the premises.

(8) Fire control. Suitable fire-control devices, such as small hose or portable fire extinguishers, shall be available to locations where fires are likely to occur. Additional fire-control equipment may be required where a tank of more than 50,000 gallons individual capacity contains Class I liquids and where an unusual exposure hazard exists from surrounding property. Such additional fire-control equipment shall be sufficient to extinguish a fire in the largest tank. The design and amount of such equipment shall be in accordance with approved engineering standards.

[Statutory Authority: Chapter 49.17 RCW. 94-15-096 (Order 94-07), § 296-24-33013, filed 7/20/94, effective 9/20/94; 91-24-017 (Order 91-07), § 296-24-33013, filed 11/22/91, effective 12/24/91. Statutory Authority: RCW 49.17.040 and 49.17.050. 85-10-004 (Order 85-09), § 296-24-33013, filed 4/19/85; Order 76-6, § 296-24-33013, filed 3/1/76; Order 73-5, § 296-24-33013, filed 5/9/73 and Order 73-4, § 296-24-33013, filed 5/7/73.]

WAC 296-24-33015 Service stations. (1) Storage and handling.

(a) General provisions.

(i) Liquids shall be stored in approved closed containers not exceeding 60 gallons capacity, in tanks located underground, in tanks in special enclosures as described in (b) of this subsection, or in aboveground tanks as provided for in (3)(b)(i), (ii), (iii) and (iv) of this section.

(ii) Aboveground tanks, located in an adjoining bulk plant, may be connected by piping to service station underground tanks if, in addition to valves at aboveground tanks, a valve is also installed within control of service station personnel.

(iii) Apparatus dispensing Class I liquids into the fuel tanks of motor vehicles of the public shall not be located at a bulk plant unless separated by a fence or similar barrier from the area in which bulk operations are conducted.

(iv) The provisions of subsection (1) of this section shall not prohibit the dispensing of flammable liquids in the open from a tank vehicle to a motor vehicle. Such dispensing shall be permitted provided:

(A) The tank vehicle complies with the requirements covered in the Standard on Tank Vehicles for Flammable Liquids, NFPA 385-1966.

(B) The dispensing is done on premises not open to the public.

(C) The dispensing hose does not exceed 50 feet in length.

(D) The dispensing nozzle is a listed automatic-closing type without a latch-open device.

(vi) Class I liquids shall not be stored or handled within a building having a basement or pit into which flammable vapors may travel, unless such area is provided with ventilation designed to prevent the accumulation of flammable vapors therein.

(vii) Accurate inventory records shall be maintained and reconciled on all Class I liquid storage tanks for possible indication of leakage from tanks or piping.

(b) Special enclosures.

(i) When installation of tanks in accordance with WAC 296-24-33005(3) is impractical because of property or building limitations, tanks for flammable or combustible liquids may be installed in buildings if properly enclosed.

(ii) The enclosure shall be substantially liquid and vapor-tight without backfill. Sides, top, and bottom of the enclosure shall be of reinforced concrete at least 6 inches thick, with openings for inspection through the top only. Tank connections shall be so piped or closed that neither vapors nor liquid can escape into the enclosed space. Means shall be provided whereby portable equipment may be employed to discharge to the outside any liquid or vapors which might accumulate should leakage occur.

(iii) At automotive service stations provided in connection with tenant or customer parking facilities at or below grade level in large buildings of commercial, mercantile, or residential occupancy, tanks containing Class I liquids, installed of necessity in accordance with subsection (1)(b)(ii) of this section, shall not exceed 6,000 gallons individual or 18,000 gallons aggregate capacity.

(c) Inside buildings.

(i) Except where stored in tanks as provided in subsection (1)(b) of this section, no Class I liquids shall be stored within any service station building except in closed containers of aggregate capacity not exceeding 60 gallons. One container not exceeding 60 gallons capacity equipped with an approved pump is permitted.

(ii) Class I liquids may be transferred from one container to another in lubrication or service rooms of a service station building provided the electrical installation complies with Table H-19 and provided that any heating equipment complies with subsection (5) of this section.

(iii) Class II and Class III liquids may be stored and dispensed inside service station buildings from tanks of not more than 120 gallons capacity each.

(d) Labeling. No sale or purchase of any Class I, II, or III liquids shall be made in containers unless such containers are clearly marked with the name of the product contained therein.

(e) Dispensing into portable containers. No delivery of any Class I liquids shall be made into portable containers unless the container is constructed of metal, has a tight closure with screwed or spring cover, and is fitted with a spout or so designed that the contents can be poured without spilling.

(2) Dispensing systems.

(a) Location. Dispensing devices at automotive service stations shall be so located that all parts of the vehicle being served will be on the premises of the service station.

(b) Inside location. Approved dispensing units may be located inside of buildings. The dispensing area shall be separated from other areas in an approved manner. The dispens-

ing unit and its piping shall be mounted either on a concrete island or protected against collision damage by suitable means and shall be located in a position where it cannot be struck by a vehicle descending a ramp or other slope out of control. The dispensing area shall be provided with an approved mechanical or gravity ventilation system. When dispensing units are located below grade, only approved mechanical ventilation shall be used and the entire dispensing area shall be protected by an approved automatic sprinkler system. Ventilating systems shall be electrically interlocked with gasoline dispensing units so that the dispensing units cannot be operated unless the ventilating fan motors are energized.

(c) Emergency power cutoff. A clearly identified and easily accessible switch(es) or a circuit breaker(s) shall be provided at a location remote from dispensing devices, including remote pumping systems, to shut off the power to all dispensing devices in the event of an emergency.

(d) Dispensing units.

(i) Class I liquids shall be transferred from tanks by means of fixed pumps so designed and equipped as to allow control of the flow and to prevent leakage or accidental discharge.

(ii) Only listed devices may be used for dispensing Class I liquids. No such device may be used if it shows evidence of having been dismantled.

(iii) Every dispensing device for Class I liquids installed after December 31, 1978, shall contain evidence of listing so placed that any attempt to dismantle the device will result in damage to such evidence, visible without disassembly or dismounting of the nozzle.

(iv) Class I liquids shall not be dispensed by pressure from drums, barrels, and similar containers. Approved pumps taking suction through the top of the container or approved self-closing faucets shall be used.

(v) The dispensing units, except those attached to containers, shall be mounted either on a concrete island or protected against collision damage by suitable means.

(e) Remote pumping systems.

(i) This subdivision shall apply to systems for dispensing Class I liquids where such liquids are transferred from storage to individual or multiple dispensing units by pumps located elsewhere than at the dispensing units.

(ii) Pumps shall be designed or equipped so that no part of the system will be subjected to pressures above its allowable working pressure. Pumps installed above grade, outside of buildings, shall be located not less than 10 feet from lines of adjoining property which is/or may be built upon, and not less than 5 feet from any building opening. When an outside pump location is impractical, pumps may be installed inside of buildings, as provided for dispensers in (b) of this subsection, or in pits as provided in (e)(iii) of this subsection. Pumps shall be substantially anchored and protected against physical damage by vehicles.

(iii) Pits for subsurface pumps or piping manifolds of submersible pumps shall withstand the external forces to which they may be subjected without damage to the pump, tank, or piping. The pit shall be no larger than necessary for inspection and maintenance and shall be provided with a fitted cover.

(iv) A control shall be provided that will permit the pump to operate only when a dispensing nozzle is removed from its bracket on the dispensing unit and the switch on this dispensing unit is manually actuated. This control shall also stop the pump when all nozzles have been returned to their brackets.

(v) An approved impact valve, incorporating a fusible link, designed to close automatically in the event of severe impact or fire exposure shall be properly installed in the dispensing supply line at the base of each individual dispensing device.

(vi) Testing. After the completion of the installation, including any paving, that section of the pressure piping system between the pump discharge and the connection for the dispensing facility shall be tested for at least 30 minutes at the maximum operating pressure of the system. Such tests shall be repeated at 5-year intervals thereafter.

(f) Delivery nozzles.

(i) A listed manual or automatic-closing type hose nozzle valve shall be provided on dispensers used for the dispensing of Class I liquids.

(ii) Manual-closing type valves shall be held open manually during dispensing. Automatic-closing type valves may be used in conjunction with an approved latch-open device.

(g) Special type dispensers.

(i) Emergency controls shall be installed at an acceptable location, but controls shall not be more than 100 feet from dispensers.

(ii) Instructions for the operation of dispensers shall be conspicuously posted.

(3) Marine service stations.

(a) Dispensing.

(i) The dispensing area shall be located away from other structures so as to provide room for safe ingress and egress of craft to be fueled. Dispensing units shall in all cases be at least 20 feet from any activity involving fixed sources of ignition.

(ii) Dispensing shall be by approved dispensing units with or without integral pumps and may be located on open piers, wharves, or floating docks or on shore or on piers of the solid fill type.

(iii) Dispensing nozzles shall be automatic-closing without a hold-open latch.

(b) Tanks and pumps.

(i) Tanks, and pumps not integral with the dispensing unit, shall be on shore or on a pier of the solid fill type, except as provided below.

(ii) Where shore location would require excessively long supply lines to dispensers, tanks may be installed on a pier provided that applicable portions of WAC 296-24-33005 relative to spacing, diking, and piping are complied with and the quantity so stored does not exceed 1,100 gallons aggregate capacity.

(iii) Shore tanks supplying marine service stations may be located above ground, where rock ledges or high water table make underground tanks impractical.

(iv) Where tanks are at an elevation which would produce gravity head on the dispensing unit, the tank outlet shall be equipped with a pressure control valve positioned adjacent to and outside the tank block valve specified in WAC 296-24-

33005 (2)(h)(ii), so adjusted that liquid cannot flow by gravity from the tank in case of piping or hose failure.

(c) Piping.

(i) Piping between shore tanks and dispensing units shall be as described in WAC 296-24-33007, except that, where dispensing is from a floating structure, suitable lengths of oil-resistant flexible hose may be employed between the shore piping and the piping on the floating structure as made necessary by change in water level or shoreline.

(ii) A readily accessible valve to shut off the supply from shore shall be provided in each pipeline at or near the approach to the pier and at the shore end of each pipeline adjacent to the point where flexible hose is attached.

(iii) Piping shall be located so as to be protected from physical damage.

(iv) Piping handling Class I liquids shall be grounded to control stray currents.

(4) Electrical equipment.

(a) Application. This subsection shall apply to areas where Class I liquids are stored or handled. For areas where Class II or Class III liquids are stored or handled the electrical equipment may be installed according to the provisions of chapter 296-24 WAC Part L for ordinary locations.

(b) All electrical equipment and wiring shall be of a type specified by and shall be installed according to chapter 296-24 WAC Part L.

(c) So far as it applies, Table H-19 shall be used to delineate and classify hazardous areas for the purpose of installation of electrical equipment under normal circumstances. A classified area shall not extend beyond an unpierced wall, roof, or other solid partition.

(d) The area classifications listed shall be based on the assumption that the installation meets the applicable requirements of this section in all respects.

TABLE H-19
ELECTRICAL EQUIPMENT HAZARDOUS AREAS—SERVICE STATIONS

Location	Class I, Group D division	Extent of classified area
Underground tank:		
Fill opening	1	Any pit, box or space below grade level, any part of which is within the Division 1 or 2 classified area.
	2	Up to 18 inches above grade level within a horizontal radius of 10 feet from a loose fill connection and within a horizontal radius of 5 feet from a tight fill connection.
Vent—Discharging upward	1	Within 3 feet of open end of vent, extending in all directions.
	2	Area between 3 feet and 5 feet of open end of vent, extending in all directions.

TABLE H-19
ELECTRICAL EQUIPMENT HAZARDOUS AREAS—SERVICE STATIONS

Location	Class I, Group D division	Extent of classified area
Dispenser:		
Pits	1	Any pit, box or space below grade level, any part of which is within the Division 1 or 2 classified area.
Dispenser enclosure	1	The area 4 feet vertically above base within the enclosure and 18 inches horizontally in all directions.
Outdoor	2	Up to 18 inches above grade level within 20 feet horizontally of any edge of enclosure.
Indoor:		
With mechanical ventilation	2	Up to 18 inches above grade or floor level within 20 feet horizontally of any edge of enclosure.
With gravity ventilation	2	Up to 18 inches above grade or floor level within 25 feet horizontally of any edge of enclosure.
Remote pump—Outdoor	1	Any pit, box or space below grade level if any part is within a horizontal distance of 10 feet from any edge of pump.
	2	Within 3 feet of any edge of pump, extending in all directions. Also up to 18 inches above grade level within 10 feet horizontally from any edge of pump.
Remote pump—Indoor	1	Entire area within any pit.
	2	Within 5 feet of any edge of pump, extending in all directions. Also up to 3 feet above floor or grade level within 25 feet horizontally from any edge of pump.

TABLE H-19
ELECTRICAL EQUIPMENT HAZARDOUS AREAS—SERVICE STATIONS

Location	Class I, Group D division	Extent of classified area
Lubrication or service room	1	Entire area within any pit.
	2	Area up to 18 inches above floor or grade level within entire lubrication room.
Dispenser for Class I liquids	2	Within 3 feet of any fill or dispensing point, extending in all directions.
Special enclosure inside building per WAC 296-24-33013 (1)(b)	1	Entire enclosure.
Sales, storage and rest rooms	Ordinary	If there is any opening to these rooms within the extent of a Division 1 area, the entire room shall be classified as Division 1.

(5) Heating equipment.

(a) Conformance. Heating equipment shall be installed as provided in (b) through (e) of this subsection.

(b) Application. Heating equipment may be installed in the conventional manner in an area except as provided in (c), (d) or (e) of this subsection.

(c) Special room. Heating equipment may be installed in a special room separated from an area classified by Table H-19 by walls having a fire resistance rating of at least 1 hour and without any openings in the walls within 8 feet of the floor into an area classified in Table H-19. This room shall not be used for combustible storage and all air for combustion purposes shall come from outside the building.

(d) Work areas. Heating equipment using gas or oil fuel may be installed in the lubrication, sales, or service room where there is no dispensing or transferring of Class I liquids provided the bottom of the combustion chamber is at least 18 inches above the floor and the heating equipment is protected from physical damage by vehicles. Heating equipment using gas or oil fuel listed for use in garages may be installed in the lubrication or service room where Class I liquids are dispensed provided the equipment is installed at least 8 feet above the floor.

(e) Electric heat. Electrical heating equipment shall conform to subsection (4) of this section.

(6) Drainage and waste disposal. Provision shall be made in the area where Class I liquids are dispensed to prevent spilled liquids from flowing into the interior of service station buildings. Such provision may be by grading driveways, raising door sills, or other equally effective means. Crankcase drainings and flammable or combustible liquids shall not be dumped into sewers but shall be stored in tanks or drums outside of any building until removed from the premises.

(7) Sources of ignition. In addition to the previous restrictions of this section, the following shall apply: There shall be no smoking or open flames in the areas used for fueling, servicing fuel systems for internal combustion engines, receiving or dispensing of flammable or combustible liquids. Conspicuous and legible signs prohibiting smoking shall be posted within sight of the customer being served. The motors of all equipment being fueled shall be shut off during the fueling operation.

(8) Fire control. Each service station shall be provided with at least one fire extinguisher having a minimum approved classification of 6 B, C located so that an extinguisher will be within 75 feet of each pump, dispenser, underground fill pipe opening, and lubrication or service room.

Note: For additional requirements relating to portable fire extinguishers see WAC 296-800-300.

[Statutory Authority: RCW 49.17.010, [49.17].040, and [49.17].050. 01-17-033, § 296-24-33015, filed 8/8/01, effective 9/1/01. Statutory Authority: Chapter 49.17 RCW. 91-24-017 (Order 91-07), § 296-24-33015, filed 11/22/91, effective 12/24/91. Statutory Authority: RCW 49.17.040 and 49.17.050. 85-10-004 (Order 85-09), § 296-24-33015, filed 4/19/85; 83-24-013 (Order 83-34), § 296-24-33015, filed 11/30/83; Order 76-6, § 296-24-33015, filed 3/1/76; Order 73-5, § 296-24-33015, filed 5/9/73 and Order 73-4, § 296-24-33015, filed 5/7/73.]

WAC 296-24-33017 Processing plants. (1) Scope. This section shall apply to those plants or buildings which contain chemical operations such as oxidation, reduction, halogenation, hydrogenation, alkylation, polymerization, and other chemical processes but shall not apply to chemical plants, refineries or distilleries.

(2) Location.

(a) Classification. The location of each processing vessel shall be based upon its flammable or combustible liquid capacity. Processing vessels shall be located, with respect to distances to lines of adjoining property which may be built upon, in accordance with Table H-20, except when the processing plant is designed in accordance with (2)(b) of this section.

TABLE H - 20

Processing vessels with emergency relief venting to permit pressure	Stable liquids	Unstable liquids
Not in excess of 2.5 p.s.i.g.	Table H-9	2 1/2 times Table H-9.
Over 2.5. p.s.i.g.	1 1/2 times Table H-9.	4 times Table H-9.

(b) Exception. The distances required in (2)(a) of this section may be waived when the vessels are housed within a building and the exterior wall facing the line of adjoining property which may be built upon is a blank wall having a fire-resistance rating of not less than 4 hours. When Class IA or unstable liquids are handled, the blank wall shall have explosion resistance in accordance with good engineering practice, see (3)(d) of this section.

(3) Processing building.

(a) Construction.

(i) Processing buildings shall be of fire-resistance or noncombustible construction, except heavy timber construction with load-bearing walls may be permitted for plants utilizing only stable Class II or Class III liquids. Except as provided in (2)(b) of this section or in the case of explosion resis-

tant walls used in conjunction with explosion relieving facilities, see (3)(d) of this section, loadbearing walls are prohibited. Buildings shall be without basements or covered pits.

(ii) Areas shall have adequate exit facilities arranged to prevent occupants from being trapped in the event of fire. Exits shall not be exposed by the drainage facilities described in (3)(b) of this section.

(b) Drainage.

(i) Emergency drainage systems shall be provided to direct flammable or combustible liquid leakage and fire protection water to a safe location. This may require curbs, scuppers, or special drainage systems to control the spread of fire, see WAC 296-24-33005 (2)(g)(ii).

(ii) Emergency drainage systems, if connected to public sewers or discharged into public waterways, shall be equipped with traps or separators.

(iii) The processing plant shall be designed and operated to prevent the normal discharge of flammable or combustible liquids to public waterways, public sewers, or adjoining property.

(c) Ventilation.

(i) Enclosed processing buildings shall be ventilated at a rate of not less than 1 cubic foot per minute per square foot of solid floor area. This shall be accomplished by natural or mechanical ventilation with discharge or exhaust to a safe location outside of the building. Provision shall be made for introduction of makeup air in such a manner as not to short circuit the ventilation. Ventilation shall be arranged to include all floor areas or pits where flammable vapors may collect.

(ii) Equipment used in a building and the ventilation of the building shall be designed so as to limit flammable vapor-air mixtures under normal operating conditions to the interior of equipment, and to not more than 5 feet from equipment which exposes Class I liquids to the air. Examples of such equipment are dispensing stations, open centrifuges, plate and frame filters, open vacuum filters, and surfaces of open equipment.

(d) Explosion relief. Areas where Class IA or unstable liquids are processed shall have explosion venting through one or more of the following methods:

(i) Open air construction.

(ii) Lightweight walls and roof.

(iii) Lightweight wall panels and roof hatches.

(iv) Windows of explosion venting type.

(4) Liquid handling.

(a) Storage.

(i) The storage of flammable or combustible liquids in tanks shall be in accordance with the applicable provisions of WAC 296-24-33005.

(ii) If the storage of flammable or combustible liquids in outside aboveground or underground tanks is not practical because of temperature or production considerations, tanks may be permitted inside of buildings or structures in accordance with the applicable provisions of WAC 296-24-33005.

(iii) Storage tanks inside of buildings shall be permitted only in areas at or above grade which have adequate drainage and are separated from the processing area by construction having a fire resistance rating of at least 2 hours.

(iv) The storage of flammable or combustible liquids in containers shall be in accordance with the applicable provisions of WAC 296-24-33009.

(b) Piping, valves, and fittings.

(i) Piping, valves, and fittings shall be in accordance with WAC 296-24-33007.

(ii) Approved flexible connectors may be used where vibration exists or where frequent movement is necessary. Approved hose may be used at transfer stations.

(iii) Piping containing flammable or combustible liquids shall be identified.

(c) Transfer.

(i) The transfer of large quantities of flammable or combustible liquids shall be through piping by means of pumps or water displacement. Except as required in process equipment, gravity flow shall not be used. The use of compressed air as a transferring medium is prohibited.

(ii) Positive displacement pumps shall be provided with pressure relief discharging back to the tank or to pump suction.

(d) Equipment.

(i) Equipment shall be designed and arranged to prevent the unintentional escape of liquids and vapors and to minimize the quantity escaping in the event of accidental release.

(ii) Where the vapor space of equipment is usually within the flammable range, the probability of explosion damage to the equipment can be limited by inerting, by providing an explosion suppression system, or by designing the equipment to contain the peak explosion pressure which may be modified by explosion relief. Where the special hazards of operation, sources of ignition, or exposures indicate a need, consideration shall be given to providing protection by one or more of the above means.

(5) Tank vehicle and tank car loading and unloading. Tank vehicle and tank car loading or unloading facilities shall be separated from aboveground tanks, warehouses, other plant buildings, or nearest line of adjoining property which may be built upon by a distance of 25 feet for Class I liquids and 15 feet for Class II and Class III liquids measured from the nearest position of any fill stem. Buildings for pumps or shelters for personnel may be a part of the facility. Operations of the facility shall comply with the appropriate portions of WAC 296-24-33013(3).

(6) Fire control.

(a) Portable extinguishers. Approved portable fire extinguishers of appropriate size, type and number shall be provided.

(b) Other controls. Where the special hazards of operation or exposure indicate a need, the following fire control provision shall be provided.

(i) A reliable water supply shall be available in pressure and quantity adequate to meet the probable fire demands.

(ii) Hydrants shall be provided in accordance with accepted good practice.

(iii) Hose connected to a source of water shall be installed so that all vessels, pumps, and other equipment containing flammable or combustible liquids can be reached with at least one hose stream. Nozzles that are capable of discharging a water spray shall be provided.

(iv) Processing plants shall be protected by an approved automatic sprinkler system or equivalent extinguishing sys-

tem. If special extinguishing systems including but not limited to those employing foam, carbon dioxide, or dry chemical are provided, approved equipment shall be used and installed in an approved manner.

(c) Alarm systems. An approved means for prompt notification of fire to those within the plant and any public fire department available shall be provided. It may be advisable to connect the plant system with the public system where public fire alarm system is available.

(d) Maintenance. All plant fire protection facilities shall be adequately maintained and periodically inspected and tested to make sure they are always in satisfactory operating condition and that they will serve their purpose in time of emergency.

(7) Sources of ignition.

(a) General.

(i) Precautions shall be taken to prevent the ignition of flammable vapors. Sources of ignition include but are not limited to open flames; lightning; smoking; cutting and welding; hot surfaces; frictional heat; static, electrical, any mechanical sparks; spontaneous ignition, including heat-producing chemical reactions; and radiant heat.

(ii) Class I liquids shall not be dispensed into containers unless the nozzle and container are electrically interconnected. Where the metallic floorplate on which the container stands while filling is electrically connected to the fill stem or where the fill stem is bonded to the container during filling operations by means of a bond wire, the provisions of this section shall be deemed to have been complied with.

(b) Maintenance and repair.

(i) When necessary to do maintenance work in a flammable or combustible liquid processing area, the work shall be authorized by a responsible representative of the employer.

(ii) Hot work such as welding or cutting operations, use of spark-producing power tools, and chipping operations shall be permitted only under supervision of an individual in responsible charge who shall make an inspection of the area to be sure that it is safe for the work to be done and that safe procedures will be followed for the work specified.

(c) Electrical.

(i) All electrical wiring and equipment within storage or processing areas shall be installed according to chapter 296-24 WAC Part L.

(ii) Locations where flammable vapor-air mixtures may exist under normal operations shall be classified Class I, Division 1 according to the requirements of chapter 296-24 WAC Part L. For those pieces of equipment installed in accordance with (3)(c)(ii) of this section, the Division 1 area shall extend 5 feet in all directions from all points of vapor liberation. All areas within pits shall be classified Division 1 if any part of the pit is within a Division 1 or 2 classified area, unless the pit is provided with mechanical ventilation.

(iii) Locations where flammable vapor-air mixtures may exist under abnormal conditions and for a distance beyond Division 1 locations shall be classified Division 2 according to the requirements of chapter 296-24 WAC Part L. These locations include an area within 20 feet horizontally, 3 feet vertically beyond a Division 1 area, and up to 3 feet above floor or grade level within 25 feet, if indoors, or 10 feet if outdoors, from any pump, bleeder, withdrawal fittings, meter, or similar device handling Class I liquids. Pits provided with adequate mechanical ventilation within a Division 1 or 2 area shall be classified Division 2. If Class II or Class III liquids only are handled, then ordinary electrical equipment is satisfactory though care shall be used in locating electrical apparatus to prevent hot metal from falling into open equipment.

(iv) Where the provisions of (7)(c)(i), (ii), and (iii) of this section require the installation of explosion-proof equipment, ordinary electrical equipment including switchgear may be used if installed in a room or enclosure which is maintained under positive pressure with respect to the hazardous area. Ventilation makeup air shall be uncontaminated by flammable vapors.

(8) Housekeeping.

(a) General. Maintenance and operating practices shall be in accordance with established procedures which will tend to control leakage and prevent the accidental escape of flammable or combustible liquids. Spills shall be cleaned up promptly.

(b) Access. Adequate aisles shall be maintained for unobstructed movement of personnel and so that fire protection equipment can be brought to bear on any part of the processing equipment.

(c) Waste and residues. Combustible waste material and residues in a building or operating area shall be kept to a minimum, stored in closed metal waste cans, and disposed of daily.

(d) Clear zone. Ground area around buildings and operating areas shall be kept free of tall grass, weeds, trash, or other combustible materials.

[Statutory Authority: Chapter 49.17 RCW. 91-24-017 (Order 91-07), § 296-24-33017, filed 11/22/91, effective 12/24/91. Statutory Authority: RCW 49.17.040 and 49.17.050. 85-10-004 (Order 85-09), § 296-24-33017, filed 4/19/85; Order 76-6, § 296-24-33017, filed 3/1/76; Order 73-5, § 296-24-33017, filed 5/9/73 and Order 73-4, § 296-24-33017, filed 5/7/73.]

WAC 296-24-33019 Refineries, chemical plants, and distilleries. (1) Storage tanks. Flammable or combustible liquids shall be stored in tanks, in containers, or in portable tanks. Tanks shall be installed in accordance with WAC 296-24-33005. Tanks for the storage of flammable or combustible liquids in tank farms and in locations other than process areas shall be located in accordance with WAC 296-24-33005 (2)(a) and (b).

(2) Wharves. Wharves handling flammable or combustible liquids shall be in accordance with WAC 296-24-33013(4).

(3) Fired and unfired pressure vessels.

(a) Fired vessels. Fired pressure vessels shall be constructed in accordance with the Code for Fired Pressure Vessels, section I of the ASME Boiler and Pressure Vessel Code—1968.

(b) Unfired vessels shall be constructed in accordance with the Code for Unfired Pressure Vessels, section VIII of the ASME Boiler and Pressure Vessel Code—1968.

(4) Location of process units. Process units shall be located so that they are accessible from at least one side for the purpose of fire control. Where topographical conditions are such that flammable or combustible liquids may flow from a processing area so as to constitute a fire hazard to

property of others, provision shall be made to divert or impound the flow by curbs, drains, or other suitable means.

(5) Fire control.

(a) Portable equipment. Portable fire extinguishment and control equipment shall be provided in such quantities and types as are needed for the special hazards of operation and storage.

(b) Water supply. Water shall be available in volume and at adequate pressure to supply water hose streams, foam producing equipment, automatic sprinklers, or water spray systems as the need is indicated by the special hazards of operation and storage.

(c) Special equipment. Special extinguishing equipment such as that utilizing foam, inert gas, or dry chemical shall be provided as the need is indicated by the special hazards of operation and storage.

[Order 73-5, § 296-24-33019, filed 5/9/73 and Order 73-4, § 296-24-33019, filed 5/7/73.]

WAC 296-24-370 Spray finishing using flammable and combustible materials.

[Order 73-5, § 296-24-370, filed 5/9/73 and Order 73-4, § 296-24-370, filed 5/7/73.]

WAC 296-24-37001 Definitions. (1) Aerated solid powders. Aerated powders shall mean any powdered material used as a coating material which shall be fluidized within a container by passing air uniformly from below. It is common practice to fluidize such materials to form a fluidized powder bed and then dip the part to be coated into the bed in a manner similar to that used in liquid dipping. Such beds are also used as sources for powder spray operations.

(2) Spraying area. Any area in which dangerous quantities of flammable vapors or mists, or combustible residues, dusts, or deposits are present due to the operation of spraying processes.

(3) Spray booth. A power-ventilated structure provided to enclose or accommodate a spraying operation to confine and limit the escape of spray, vapor, and residue, and to safely conduct or direct them to an exhaust system.

(4) Waterwash spray booth. A spray booth equipped with a water washing system designed to minimize dusts or residues entering exhaust ducts and to permit the recovery of overspray finishing material.

(5) Dry spray booth. A spray booth not equipped with a water washing system as described in subsection (4) of this section. A dry spray booth may be equipped with (a) distribution or baffle plates to promote an even flow of air through the booth or cause the deposit of overspray before it enters the exhaust duct; or (b) overspray dry filters to minimize dusts; or (c) overspray dry filters to minimize dusts or residues entering exhaust ducts; or (d) overspray dry filter rolls designed to minimize dusts or residues entering exhaust ducts; or (e) where dry powders are being sprayed, with powder collection systems so arranged in the exhaust to capture oversprayed material.

(6) Fluidized bed. A container holding powder coating material which is aerated from below so as to form an air-supported expanded cloud of such material through which the preheated object to be coated is immersed and transported.

(7) Electrostatic fluidized bed. A container holding powder coating material which is aerated from below so as to form an air-supported expanded cloud of such material which is electrically charged with a charge opposite to the charge of the object to be coated; such object is transported through the container immediately above the charged and aerated materials in order to be coated.

(8) Approved. Shall mean approved and listed by a nationally recognized testing laboratory. Refer to federal regulation 29 CRF 1910.7 for definition of nationally recognized testing laboratory.

(9) Listed. See "approved" in subsection (8) of this section.

[Statutory Authority: Chapter 49.17 RCW. 88-23-054 (Order 88-25), § 296-24-37001, filed 11/14/88; Order 76-6, § 296-24-37001, filed 3/1/76; Order 73-5, § 296-24-37001, filed 5/9/73 and Order 73-4, § 296-24-37001, filed 5/7/73.]

WAC 296-24-37003 Spray booths. (1) Construction. Spray booths shall be substantially constructed of steel, securely and rigidly supported, or of concrete or masonry except that aluminum or other substantial noncombustible material may be used for intermittent or low volume spraying. Spray booths shall be designed to sweep air currents toward the exhaust outlet.

(2) Interiors. The interior surfaces of spray booths shall be smooth and continuous without edges and otherwise designed to prevent pocketing of residues and facilitate cleaning and washing without injury.

(3) Floors. The floor surface of a spray booth and operator's working area, if combustible, shall be covered with noncombustible material of such character as to facilitate the safe cleaning and removal of residues.

(4) Distribution or baffle plates. Distribution or baffle plates, if installed to promote an even flow of air through the booth or cause the deposit of overspray before it enters the exhaust duct, shall be of noncombustible material and readily removable or accessible on both sides for cleaning. Such plates shall not be located in exhaust ducts.

(5) Dry type overspray collectors—(Exhaust air filters). In conventional dry type spray booths, overspray dry filters or filter rolls, if installed, shall conform to the following:

(a) The spraying operations except electrostatic spraying operations shall be so designed, installed and maintained that the average air velocity over the open face of the booth (or booth cross section during spraying operations) shall be not less than 100 linear feet per minute. Electrostatic spraying operations may be conducted with an air velocity over the open face of the booth of not less than 60 linear feet per minute, or more, depending on the volume of the finishing material being applied and its flammability and explosion characteristics. Visible gauges or audible alarm or pressure activated devices shall be installed to indicate or insure that the required air velocity is maintained. Dry spray booths equipped with a filter roll which is automatically advanced when the air velocity is reduced to that specified in this section should be arranged to cause shutdown of spraying operations if the filter roll fails to advance automatically. Maintenance procedures should be established to assure replacing filter pads before excessive restriction to airflow occurs. Filter pads should be inspected after each period of use and

clogged filter pads discarded and replaced. Filter rolls shall be inspected to insure proper replacement of filter media.

(b) All discarded filter pads and filter rolls shall be immediately removed to a safe, well-detached location or placed in a water-filled metal container and disposed of at the close of the day's operation unless maintained completely in water.

(c) The location of filters in a spray booth shall be so as to not reduce the effective booth enclosure of the articles being sprayed.

(d) Space within the spray booth on the downstream and upstream sides of filters shall be protected with an approved automatic sprinkler system meeting one of the following requirements:

(i) An automatic sprinkler system as defined in WAC 296-24-607; or

(ii) A fixed dry chemical extinguishing system as defined in WAC 296-24-622; or

(iii) A fixed carbon dioxide gaseous agent system as defined in WAC 296-24-623.

(e) Filters or filter rolls shall not be used when applying a spray material known to be highly susceptible to spontaneous heating and ignition.

(f) Clean filters or filter rolls shall be noncombustible or of a type having a combustibility not in excess of Class 2 filters as listed by Underwriters' Laboratories, Inc. Filters and filter rolls shall not be alternately used for different types of coating materials, where the combination of materials may be conducive to spontaneous ignition. See also WAC 296-24-37013(6).

(6) Frontal area. Each spray booth having a frontal area larger than 9 square feet shall have a metal deflector or curtain not less than 2 1/2 inches deep installed at the upper outer edge of the booth over the opening.

(7) Conveyors. Where conveyors are arranged to carry work into or out of spray booths, the openings therefor shall be as small as practical.

(8) Separation of operations. Each spray booth shall be separated from other operations by not less than 3 feet, or by a greater distance, or by such partition or wall as to reduce the danger from juxtaposition of hazardous operations. See also WAC 296-24-37005(1).

(9) Cleaning. Spray booths shall be so installed that all portions are readily accessible for cleaning. A clear space of not less than 3 feet on all sides shall be kept free from storage or combustible construction.

(10) Illumination. When spraying areas are illuminated through glass panels or other transparent materials, only fixed lighting units shall be used as a source of illumination. Panels shall effectively isolate the spraying area from the area in which the lighting unit is located, and shall be of a noncombustible material of such a nature or so protected that breakage will be unlikely. Panels shall be so arranged that normal accumulations of residue on the exposed surface of the panel will not be raised to a dangerous temperature by radiation or conduction from the source of illumination.

[Statutory Authority: Chapter 49.17 RCW. 89-11-035 (Order 89-03), § 296-24-37003, filed 5/15/89, effective 6/30/89; Order 76-6, § 296-24-37003, filed 3/1/76; Order 73-5, § 296-24-37003, filed 5/9/73 and Order 73-4, § 296-24-37003, filed 5/7/73.]

WAC 296-24-37005 Electrical and other sources of ignition. (1) Conformance. All electrical equipment, open flames and other sources of ignition shall conform to the requirements of this section, except as follows:

(a) Electrostatic apparatus shall conform to the requirements of WAC 296-24-37015 and 296-24-37017.

(b) Drying, curing, and fusion apparatus shall conform to the requirements of WAC 296-24-37019.

(c) Automobile undercoating spray operations in garages shall conform to the requirements of WAC 296-24-37021.

(d) Powder coating equipment shall conform to the requirements of WAC 296-24-37023.

(2) Minimum separation. There shall be no open flame or spark producing equipment in any spraying area nor within 20 feet thereof, unless separated by a partition.

(3) Hot surfaces. Space-heating appliances, steampipes, or hot surfaces shall not be located in a spraying area where deposits of combustible residues may readily accumulate.

(4) Wiring conformance. Electrical wiring and equipment shall conform to the provisions of this section and chapter 296-24 WAC Part L.

(5) Combustible residues, areas. Unless specifically approved for locations containing both deposits of readily ignitable residue and explosive vapors, there shall be no electrical equipment in any spraying area, whereon deposits of combustible residues may readily accumulate, except wiring in rigid conduit or in boxes or fittings containing no taps, splices, or terminal connections.

(6) Wiring type approved. Electrical wiring and equipment not subject to deposits of combustible residues but located in a spraying area as herein defined shall be of explosion-proof type approved for Class I, Group D locations and conform to the provisions of chapter 296-24 WAC Part L, for Class I, Division 1, hazardous locations. Electrical wiring, motors, and other equipment outside of but within twenty feet of any spraying area, and not separated therefrom by partitions, shall not produce sparks under normal operating conditions and conform to the provisions of chapter 296-24 WAC Part L for Class I, Division 2, hazardous locations.

(7) Lamps. Electric lamps outside of, but within twenty feet of any spraying area, and not separated therefrom by a partition, shall be totally enclosed to prevent the falling of hot particles and shall be protected from mechanical injury by suitable guards or by location.

(8) Portable lamps. Portable electric lamps shall not be used in any spraying area during spraying operations. Portable electric lamps, if used during cleaning or repairing operations, shall be of the type approved for hazardous Class I locations.

(9) Grounding.

(a) All metal parts of spray booths, exhaust ducts, and piping systems conveying flammable or combustible liquids or aerated solids shall be properly electrically grounded in an effective and permanent manner.

(b) "Airless" high-fluid pressure spray guns and any conductive object being sprayed should be properly electrically grounded.

[Statutory Authority: Chapter 49.17 RCW. 91-24-017 (Order 91-07), § 296-24-37005, filed 11/22/91, effective 12/24/91. Statutory Authority: RCW 49.17.040 and 49.17.050. 85-10-004 (Order 85-09), § 296-24-37005, filed

4/19/85; Order 76-6, § 296-24-37005, filed 3/1/76; Order 73-5, § 296-24-37005, filed 5/9/73 and Order 73-4, § 296-24-37005, filed 5/7/73.]

WAC 296-24-37007 Ventilation. (1) Conformance. Ventilating and exhaust systems shall be in accordance with the Standard for Blower and Exhaust Systems for Vapor Removal, NFPA No. 91-1961, where applicable and shall also conform to the provisions of this section.

(2) General. All spraying areas shall be provided with mechanical ventilation adequate to remove flammable vapors, mists or powders to a safe location and to confine and control combustible residues so that life is not endangered. Mechanical ventilation shall be kept in operation at all times while spraying operations are being conducted and for a sufficient time thereafter to allow vapors from drying coated articles and drying finishing material residue to be exhausted.

(3) Independent exhaust. Each spray booth shall have an independent exhaust duct system discharging to the exterior of the building, except that multiple cabinet spray booths in which identical spray finishing material is used with a combined frontal area of not more than 18 square feet may have a common exhaust. If more than one fan serves one booth, all fans shall be so interconnected that one fan cannot operate without all fans being operated.

(4) Fan-rotating element. The fan-rotating element shall be nonferrous or nonsparking or the casing shall consist of or be lined with such material. There shall be ample clearance between the fan-rotating element and the fan casing to avoid a fire by friction, necessary allowance being made for ordinary expansion and loading to prevent contact between moving parts and the duct or fan housing. Fan blades shall be mounted on a shaft sufficiently heavy to maintain perfect alignment even when the blades of the fan are heavily loaded, the shaft preferably to have bearings outside the duct and booth. All bearings shall be of the self-lubricating type, or lubricated from the outside duct.

(5) Electric motors. Electric motors driving exhaust fans shall not be placed inside booths or ducts. See also WAC 296-24-37005.

(6) Belts. Belts shall not enter the duct or booth unless the belt and pulley within the duct or booth are thoroughly enclosed.

(7) Exhaust ducts. Exhaust ducts shall be constructed of steel and shall be substantially supported. Exhaust ducts without dampers are preferred; however, if dampers are installed, they shall be maintained so that they will be in a full open position at all times the ventilating system is in operation.

(a) Exhaust ducts shall be protected against mechanical damage and have a clearance from unprotected combustible construction or other combustible material of not less than 18 inches.

(b) If combustible construction is provided with the following protection applied to all surfaces within 18 inches, clearances may be reduced to the distances indicated:

(i) 8-gage sheet metal on 1/4-inch 12 inches.
asbestos mill board.

(ii) 28-gage sheet metal on 1/8-inch 9 inches.
asbestos mill board spaced out 1 inch on noncombustible spacers.

(iii) 22-gage sheet metal on 1-inch 3 inches.
rockwool batts reinforced with wire mesh or the equivalent.

(iv) Where ducts are protected with an approved automatic sprinkler system, properly maintained, the clearance required in (7)(a) of this section may be reduced to 6 inches.

(8) Discharge clearance. Unless the spray booth exhaust duct terminal is from a water-wash spray booth, the terminal discharge point shall be not less than 6 feet from any combustible exterior wall or roof nor discharge in the direction of any combustible construction or unprotected opening in any noncombustible exterior wall within 25 feet.

(9) Air exhaust. Air exhaust from spray operations shall not be directed so that it will contaminate makeup air being introduced into the spraying area or other ventilating intakes, nor directed so as to create a nuisance. Air exhausted from spray operations shall not be recirculated.

(10) Access doors. When necessary to facilitate cleaning, exhaust ducts shall be provided with an ample number of access doors.

(11) Room intakes. Air intake openings to rooms containing spray finishing operations shall be adequate for the efficient operation of exhaust fans and shall be so located as to minimize the creation of dead air pockets.

(12) Drying spaces. Freshly sprayed articles shall be dried only in spaces provided with adequate ventilation to prevent the formation of explosive vapors. In the event adequate and reliable ventilation is not provided such drying spaces shall be considered a spraying area. (See also WAC 296-24-37019.)

[Order 76-6, § 296-24-37007, filed 3/1/76; Order 73-5, § 296-24-37007, filed 5/9/73 and Order 73-4, § 296-24-37007, filed 5/7/73.]

WAC 296-24-37009 Flammable and combustible liquids—Storage and handling. (1) Conformance. The storage of flammable or combustible liquids in connection with spraying operations shall conform to the requirements of WAC 296-24-330, where applicable.

(2) Quantity. The quantity of flammable or combustible liquids kept in the vicinity of spraying operations shall be the minimum required for operations and should ordinarily not exceed a supply for 1 day or one shift. Bulk storage of portable containers of flammable or combustible liquids shall be in a separate, constructed building detached from other important buildings or cut off in a standard manner.

(3) Containers. Original closed containers, approved portable tanks, approved safety cans or a properly arranged system of piping shall be used for bringing flammable or combustible liquids into spray finishing room. Open or glass containers shall not be used.

(4) Transferring liquids. Except as provided in (5) of this section, the withdrawal of flammable and combustible liquids from containers having a capacity of greater than 60 gallons shall be by approved pumps. The withdrawal of flammable or combustible liquids from containers and the filling of containers, including portable mixing tanks, shall be done only in a suitable mixing room or in a spraying area when the ventilating system is in operation. Adequate precautions shall be taken to protect against liquid spillage and sources of ignition.

(5) Spraying containers. Containers supplying spray nozzles shall be of closed type or provided with metal covers kept closed. Containers not resting on floors shall be on metal

supports or suspended by wire cables. Containers supplying spray nozzles by gravity flow shall not exceed 10 gallons capacity. Original shipping containers shall not be subject to air pressure for supplying spray nozzles. Containers under air pressure supplying spray nozzles shall be of limited capacity, not exceeding that necessary for 1 day's operation; shall be designed and approved for such use; shall be provided with a visible pressure gage; and shall be provided with a relief valve set to operate in conformance with the requirements of the Code for Unfired Pressure Vessels, Section VIII of the ASME Boiler and Pressure Vessel Code—1968. Containers under air pressure supplying spray nozzles, air-storage tanks and coolers shall conform to the standards of the Code for Unfired Pressure Vessels, Section VIII of the ASME Boiler and Pressure Vessel Code—1968 for construction, tests, and maintenance.

(6) Pipes and hoses.

(a) All containers or piping to which is attached a hose or flexible connection shall be provided with a shutoff valve at the connection. Such valves shall be kept shut when spraying operations are not being conducted.

(b) When a pump is used to deliver products, automatic means shall be provided to prevent pressure in excess of the design working pressure of accessories, piping, and hose.

(c) All pressure hose and couplings shall be inspected at regular intervals appropriate to this service. The hose and couplings shall be tested with the hose extended, and using the "inservice maximum operating pressures." Any hose showing material deteriorations, signs of leakage, or weakness in its carcass or at the couplings, shall be withdrawn from service and repaired or discarded.

(d) Piping systems conveying flammable or combustible liquids shall be of steel or other material having comparable properties of resistance to heat and physical damage. Piping systems shall be properly bonded and grounded.

(7) Spray liquid heaters. Electrically powered spray liquid heaters shall be approved and listed for the specific location in which used (see WAC 296-24-37005). Heaters shall not be located in spray booths nor other locations subject to the accumulation of deposits or combustible residue. Agitators, if used, should preferably be driven by compressed air, water, or low-pressure steam. If an electric motor is used, (see WAC 296-24-37005).

(8) Pump relief. If flammable or combustible liquids are supplied to spray nozzles by positive displacement pumps, the pump discharge line shall be provided with an approved relief valve discharging to a pump suction or a safe detached location, or a device provided to stop the prime mover if the discharge pressure exceeds the safe operating pressure of the system.

(9) Grounding. Whenever flammable or combustible liquids are transferred from one container to another, both containers shall be effectively bonded and grounded to prevent discharge sparks of static electricity.

[Order 73-5, § 296-24-37009, filed 5/9/73 and Order 73-4, § 296-24-37009, filed 5/7/73.]

WAC 296-24-37011 Protection. (1) Conformance. In sprinklered buildings, the automatic sprinkler system in rooms containing spray finishing operations shall conform to the requirements of WAC 296-24-607. In unsprinklered buildings where sprinklers are installed only to protect spraying areas, the installation shall conform to such standards insofar as they are applicable. Sprinkler heads shall be located so as to provide water distribution throughout the entire booth.

(2) Valve access. Automatic sprinklers protecting each spray booth (together with its connecting exhaust) shall be under an accessibly located separate outside stem and yoke (OS&Y) subcontrol valve.

(3) Cleaning of heads. Sprinklers protecting spraying areas shall be kept as free from deposits as practical by cleaning daily if necessary. (See also WAC 296-24-37013.)

(4) Portable extinguishers. An adequate supply of suitable portable fire extinguishers shall be installed near all spraying areas.

[Statutory Authority: RCW 49.17.040 and 49.17.050. 82-02-003 (Order 81-32), § 296-24-37011, filed 12/24/81; Order 73-5, § 296-24-37011, filed 5/9/73 and Order 73-4, § 296-24-37011, filed 5/7/73.]

WAC 296-24-37013 Operations and maintenance. (1) Spraying. Spraying shall not be conducted outside of predetermined spraying areas.

(2) Cleaning. All spraying areas shall be kept as free from the accumulation of deposits of combustible residues as practical, with cleaning conducted daily if necessary. Scrapers, spuds, or other such tools used for cleaning purposes shall be of nonsparking material.

(3) Residue disposal. Residue scrapings and debris contaminated with residue shall be immediately removed from the premises and properly disposed of. Approved metal waste cans shall be provided wherever rags or waste are impregnated with finishing material and all such rags or waste deposited therein immediately after use. The contents of waste cans shall be properly disposed of at least once daily or at the end of each shift.

(4) Clothing storage. Spray finishing employees' clothing shall not be left on the premises overnight unless kept in metal lockers.

(5) Cleaning solvents. The use of solvents for cleaning operations shall be restricted to those having flashpoints not less than 100°F; however, for cleaning spray nozzles and auxiliary equipment, solvents having flashpoints not less than those normally used in spray operations may be used. Such cleaning shall be conducted inside spray booths and ventilating equipment operated during cleaning.

(6) Hazardous materials combinations. Spray booths shall not be alternately used for different types of coating materials, where the combination of the materials may be conducive to spontaneous ignition, unless all deposits of the first used material are removed from the booth and exhaust ducts prior to spraying with the second used material.

(7) "No smoking" signs. "No smoking" signs in large letters on contrasting color background shall be conspicuously posted at all spraying areas and paint storage rooms.

[Statutory Authority: RCW 49.17.010, 49.17.040, 49.17.050, 49.17.060. 04-18-080, § 296-24-37013, filed 8/31/04, effective 11/1/04; Order 73-5, § 296-24-37013, filed 5/9/73 and Order 73-4, § 296-24-37013, filed 5/7/73.]

WAC 296-24-37015 Fixed electrostatic apparatus. (1) Conformance. Where installation and use of electrostatic spraying equipment is used, such installation and use shall

conform to all other requirements contained in WAC 296-24-370 through 296-24-37027.

(2) Type approval. Electrostatic apparatus and devices used in connection with coating operations shall be of approved types.

(3) Location. Transformers, power packs, control apparatus, and all other electrical portions of the equipment, with the exception of high-voltage grids, electrodes, and electrostatic atomizing heads and their connections, shall be located outside of the spraying area, or shall otherwise conform to the requirements of WAC 296-24-37005.

(4) Support. Electrodes and electrostatic atomizing heads shall be adequately supported in permanent locations and shall be effectively insulated from the ground. Electrodes and electrostatic atomizing heads which are permanently attached to their bases, supports, or reciprocators, shall be deemed to comply with this section. Insulators shall be nonporous and noncombustible.

(5) Insulators, grounding. High-voltage leads to electrodes shall be properly insulated and protected from mechanical injury or exposure to destructive chemicals. Electrostatic atomizing heads shall be effectively and permanently supported on suitable insulators and shall be effectively guarded against accidental contact or grounding. An automatic means shall be provided for grounding the electrode system when it is electrically deenergized for any reason. All insulators shall be kept clean and dry.

(6) Safe distance. A safe distance shall be maintained between goods being painted and electrodes or electrostatic atomizing heads or conductors of at least twice the sparking distance. A suitable sign indicating this safe distance shall be conspicuously posted near the assembly.

(7) Conveyors required. Goods being painted using this process are to be supported on conveyors. The conveyors shall be so arranged as to maintain safe distances between the goods and the electrodes or electrostatic atomizing heads at all times. Any irregularly shaped or other goods subject to possible swinging or movement shall be rigidly supported to prevent such swinging or movement which would reduce the clearance to less than that specified in (6) of this section.

(8) Prohibition. This process is not acceptable where goods being coated are manipulated by hand. When finishing materials are applied by electrostatic equipment which is manipulated by hand, see WAC 296-24-37017 for applicable requirements. (Rev. 1-23-76)

(9) Fail-safe controls. Electrostatic apparatus shall be equipped with automatic controls which will operate without time delay to disconnect the power supply to the high voltage transformer and to signal the operator under any of the following conditions:

(a) Stoppage of ventilating fans or failure of ventilating equipment from any cause.

(b) Stoppage of the conveyor carrying goods through the high voltage field.

(c) Occurrence of a ground or of an imminent ground at any point on the high voltage system.

(d) Reduction of clearance below that specified in (6) of this section.

(10) Guarding. Adequate booths, fencing, railings, or guards shall be so placed about the equipment that they, either by their location or character or both, assure that a safe isolation of the process is maintained from plant storage or personnel. Such railings, fencing, and guards shall be of conducting material, adequately grounded.

(11) Ventilation. Where electrostatic atomization is used the spraying area shall be so ventilated as to insure safe conditions from a fire and health standpoint.

(12) Fire protection. All areas used for spraying, including the interior of the booth, shall be protected by automatic sprinklers where this protection is available. Where this protection is not available, other approved automatic extinguishing equipment shall be provided.

[Order 76-6, § 296-24-37015, filed 3/1/76; Order 73-5, § 296-24-37015, filed 5/9/73 and Order 73-4, § 296-24-37015, filed 5/7/73.]

WAC 296-24-37017 Electrostatic hand spraying equipment. (1) Application. This section shall apply to any equipment using electrostatically charged elements for the atomization and/or, precipitation of materials for coatings on articles, or for other similar purposes in which the atomizing device is hand held and manipulated during the spraying operation.

(2) Conformance. Electrostatic hand spraying equipment shall conform with the other provisions of WAC 296-24-370 through 296-24-37027.

(3) Equipment approval and specifications. Electrostatic hand spray apparatus and devices used in connection with coating operations shall be of approved types. The equipment should be so designed that the maximum surface temperature of the equipment in the spraying area shall not exceed 150°F under any condition. The high voltage circuits shall be designed so as to not produce a spark of sufficient intensity to ignite any vapor-air mixtures nor result in appreciable shock hazard upon coming in contact with a grounded object under all normal operating conditions. The electrostatically charged exposed elements of the handgun shall be capable of being energized only by a switch which also controls the coating material supply.

(4) Electrical support equipment. Transformers, powerpacks, control apparatus, and all other electrical portions of the equipment, with the exception of the handgun itself and its connections to the powder supply shall be located outside of the spraying area or shall otherwise conform to the requirements of WAC 296-24-37005.

(5) Spray gun ground. The handle of the spraying gun shall be electrically connected to ground by a metallic connection and to be so constructed that the operator in normal operating position is in intimate electrical contact with the grounded handle.

(6) Grounding—General. All electrically conductive objects in the spraying area shall be adequately grounded. This requirement shall apply to paint containers, wash cans, and any other objects or devices in the area. The equipment shall carry a prominent permanently installed warning regarding the necessity for this grounding feature.

(7) Maintenance of grounds. Objects being painted or coated shall be maintained in metallic contact with the conveyor or other grounded support. Hooks shall be regularly cleaned to insure this contact and areas of contact shall be sharp points or knife edges where possible. Points of support of the object shall be concealed from random spray where

feasible and where the objects being sprayed are supported from a conveyor, the point of attachment to the conveyor shall be so located as to not collect spray material during normal operation.

(8) Interlocks. The electrical equipment shall be so interlocked with the ventilation of the spraying area that the equipment cannot be operated unless the ventilation fans are in operation.

(9) Ventilation. The spraying operation shall take place within a spray area which is adequately ventilated to remove solvent vapors released from the operation.

[Order 73-5, § 296-24-37017, filed 5/9/73 and Order 73-4, § 296-24-37017, filed 5/7/73.]

WAC 296-24-37019 Drying, curing, or fusion apparatus. (1) Conformance. Drying, curing, or fusion apparatus in connection with spray application of flammable and combustible finishes shall conform to the Standard for Ovens and Furnaces, NFPA 86A-1969, where applicable and shall also conform with the following requirements of this section.

(2) Alternate use prohibited. Spray booths, rooms, or other enclosures used for spraying operations shall not alternately be used for the purpose of drying by any arrangement which will cause a material increase in the surface temperature of the spray booth, room, or enclosure.

(3) Adjacent system interlocked. Except as specifically provided in (4) of this section, drying, curing, or fusion units utilizing a heating system having open flames or which may produce sparks shall not be installed in a spraying area, but may be installed adjacent thereto when equipped with an interlocked ventilating system arranged to:

(a) Thoroughly ventilate the drying space before the heating system can be started;

(b) Maintain a safe atmosphere at any source of ignition;

(c) Automatically shut down the heating system in the event of failure of the ventilating system.

(4) Alternate use permitted. Automobile refinishing spray booths or enclosures, otherwise installed and maintained in full conformity with this section, may alternately be used for drying with portable electrical infrared drying apparatus when conforming with the following:

(a) Interior (especially floors) of spray enclosures shall be kept free of overspray deposits.

(b) During spray operations, the drying apparatus and electrical connections and wiring thereto shall not be located within spray enclosure nor in any other location where spray residues may be deposited thereon.

(c) The spraying apparatus, the drying apparatus, and the ventilating system of the spray enclosure shall be equipped with suitable interlocks so arranged that:

(i) The spraying apparatus cannot be operated while the drying apparatus is inside the spray enclosure.

(ii) The spray enclosure will be purged of spray vapors for a period of not less than 3 minutes before the drying apparatus can be energized.

(iii) The ventilating system will maintain a safe atmosphere within the enclosure during the drying process and the drying process apparatus will automatically shut off in the event of failure of the ventilating system.

(d) All electrical wiring and equipment of the drying apparatus shall conform with the applicable sections of chapter 296-24 WAC Part L. Only equipment of a type approved for Class I, Division 2 hazardous locations shall be located within 18 inches of floor level. All metallic parts of the drying apparatus shall be properly electrically bonded and grounded.

(e) The drying apparatus shall contain a prominently located, permanently attached warning sign indicating that ventilation should be maintained during the drying period and that spraying should not be conducted in the vicinity that spray will deposit on apparatus.

[Statutory Authority: Chapter 49.17 RCW. 91-24-017 (Order 91-07), § 296-24-37019, filed 11/22/91, effective 12/24/91. Statutory Authority: RCW 49.17.040 and 49.17.050. 85-10-004 (Order 85-09), § 296-24-37019, filed 4/19/85; Order 76-6, § 296-24-37019, filed 3/1/76; Order 73-5, § 296-24-37019, filed 5/9/73 and Order 73-4, § 296-24-37019, filed 5/7/73.]

WAC 296-24-37021 Automobile undercoating in garages. Automobile undercoating spray operations in garages, conducted in areas having adequate natural or mechanical ventilation, are exempt from the requirements pertaining to spray finishing operations, when using undercoating materials not more hazardous than kerosene (as listed by Underwriters' Laboratories in respect to fire hazard rating 30-40) or undercoating materials using only solvents listed as having a flash point in excess of 100°F. Undercoating spray operations not conforming to these provisions are subject to all requirements of WAC 296-24-370 through 296-24-37027, pertaining to spray finishing operations.

[Order 73-5, § 296-24-37021, filed 5/9/73 and Order 73-4, § 296-24-37021, filed 5/7/73.]

WAC 296-24-37023 Powder coating. (1) Electrical and other sources of ignition. Electrical equipment and other sources of ignition shall conform to the requirements of WAC 296-24-37005 and chapter 296-24 WAC Part L.

(2) Ventilation.

(a) In addition to the provisions of WAC 296-24-37007, where applicable, exhaust ventilation shall be sufficient to maintain the atmosphere below the lowest explosive limits for the materials being applied. All nondeposited air-suspended powders shall be safely removed via exhaust ducts to the powder recovery cyclone or receptacle. Each installation shall be designed and operated to meet the foregoing performance specification.

(b) Powders shall not be released to the outside atmosphere.

(3) Drying, curing, or fusion equipment. The provisions of the Standard for Ovens and Furnaces, NFPA No. 86A-1969 shall apply where applicable.

(4) Operation and maintenance.

(a) All areas shall be kept free of the accumulation of powder coating dusts, particularly such horizontal surfaces as ledges, beams, pipes, hoods, booths, and floors.

(b) Surfaces shall be cleaned in such manner as to avoid scattering dust to other places or creating dust clouds.

(c) "No smoking" signs in large letters on contrasting color background shall be conspicuously posted at all powder coating areas and powder storage rooms.

(5) Fixed electrostatic spraying equipment. The provisions of WAC 296-24-37015 and other subsections of this section shall apply to fixed electrostatic equipment, except

that electrical equipment not covered therein shall conform to (1) of this section.

(6) Electrostatic hand spraying equipment. The provisions of WAC 296-24-37017 and other subsections of this section, shall apply to electrostatic handguns when used in powder coating, except that electrical equipment not covered therein shall conform to (1) of this section.

(7) Electrostatic fluidized beds.

(a) Electrostatic fluidized beds and associated equipment shall be of approved types. The maximum surface temperature of this equipment in the coating area shall not exceed 150°F. The high voltage circuits shall be so designed as to not produce a spark of sufficient intensity to ignite any powder-air mixtures nor result in appreciable shock hazard upon coming in contact with a grounded object under normal operating conditions.

(b) Transformers, powerpacks, control apparatus, and all other electrical portions of the equipment, with the exception of the charging electrodes and their connections to the power supply shall be located outside of the powder coating area or shall otherwise conform to the requirements of (1) of this section.

(c) All electrically conductive objects within the charging influence of the electrodes shall be adequately grounded. The powder coating equipment shall carry a prominent, permanently installed warning regarding the necessity for grounding these objects.

(d) Objects being coated shall be maintained in contact with the conveyor or other support in order to insure proper grounding. Hangers shall be regularly cleaned to insure effective contact and areas of contact shall be sharp points or knife edges where possible.

(e) The electrical equipment shall be so interlocked with the ventilation system that the equipment cannot be operated unless the ventilation fans are in operation.

[Statutory Authority: Chapter 49.17 RCW. 91-24-017 (Order 91-07), § 296-24-37023, filed 11/22/91, effective 12/24/91. Statutory Authority: RCW 49.17.040 and 49.17.050. 85-10-004 (Order 85-09), § 296-24-37023, filed 4/19/85; Order 76-6, § 296-24-37023, filed 3/1/76; Order 73-5, § 296-24-37023, filed 5/9/73 and Order 73-4, § 296-24-37023, filed 5/7/73.]

WAC 296-24-37025 Organic peroxides and dual component coatings. (1) Conformance. All spraying operations involving the use of organic peroxides and other dual component coatings shall be conducted in approved sprinklered spray booths meeting the requirements of this section.

(2) Smoking. Smoking shall be prohibited and "no smoking" signs shall be prominently displayed and only nonsparking tools shall be used in any area where organic peroxides are stored, mixed or applied.

[Order 73-5, § 296-24-37025, filed 5/9/73 and Order 73-4, § 296-24-37025, filed 5/7/73.]

WAC 296-24-37027 Scope. This section applies to flammable and combustible finishing materials when applied as a spray by compressed air, "airless" or "hydraulic atomization," steam, electrostatic methods, or by any other means in continuous or intermittent processes. The section also covers the application of combustible powders by powder spray guns, electrostatic powder spray guns, fluidized beds, or electrostatic fluidized beds. The section does not apply to outdoor spray application of buildings, tanks or other similar structures, nor to small portable spraying apparatus not used repeatedly in the same location.

[Order 73-5, § 296-24-37027, filed 5/9/73 and Order 73-4, § 296-24-37027, filed 5/7/73.]

WAC 296-24-450 Chlorine cylinders used in chlorinator systems. Ventilation, storage of tanks and use of tanks shall meet specifications of The Chlorine Manual, The Chlorine Institute, Inc., fifth edition, 1986.

[Statutory Authority: Chapter 49.17 RCW. 91-03-044 (Order 90-18), § 296-24-450, filed 1/10/91, effective 2/12/91; Order 74-27, § 296-24-450, filed 5/7/74.]

PART F-1
STORAGE AND HANDLING OF LIQUEFIED PETROLEUM GASES

WAC 296-24-475 Storage and handling of liquefied petroleum gases.

[Order 73-5, § 296-24-475, filed 5/9/73 and Order 73-4, § 296-24-475, filed 5/7/73.]

WAC 296-24-47501 Definitions. (1) API-ASME container. A container constructed in accordance with the requirements of WAC 296-24-47505 (3)(a).

(2) ASME container. A container constructed in accordance with the requirements of WAC 296-24-47505 (3)(a).

(3) Container assembly. An assembly consisting essentially of the container and fittings for all container openings, including shutoff valves, excess flow valves, liquid-level gaging devices, safety relief devices, and protective housing.

(4) Containers. All vessels, such as tanks, cylinders, or drums, used for transportation or storing liquefied petroleum gases.

(5) DOT. Department of transportation.

(6) DOT container. A container constructed in accordance with the applicable requirements of 49 CFR chapter 1.

(7) "Liquefied petroleum gases." "LPG" and "LP-gas." Any material which is composed predominantly of any of the following hydrocarbons, or mixtures of them; propane, propylene, butanes (normal butane or iso-butane), and butylenes.

(8) Movable fuel storage tenders or farm carts. Containers not in excess of 1,200 gallons water capacity, equipped with wheels to be towed from one location of usage to another. They are basically nonhighway vehicles, but may occasionally be moved over public roads or highways. They are used as a fuel supply for farm tractors, construction machinery and similar equipment.

(9) P.S.I.G. Pounds per square inch gauge.

(10) P.S.I.A. Pounds per square inch absolute.

(11) Systems. An assembly of equipment consisting essentially of the container or containers, major devices such as vaporizers, safety relief valves, excess flow valves, regulators, and piping connecting such parts.

(12) Vaporizer-burner. An integral vaporizer-burner unit, dependent upon the heat generated by the burner as the source of heat to vaporize the liquid used for dehydrators or dryers.

(13) Ventilation, adequate. When specified for the prevention of fire during normal operation, ventilation shall be

considered adequate when the concentration of the gas in a gas-air mixture does not exceed 25 percent of the lower flammable limit.

(14) Approved. Unless otherwise indicated, listing or approval by a nationally recognized testing laboratory. Refer to 29 CFR 1910.7 for definition of nationally recognized testing laboratory.

(15) Listed. See "approved" in WAC 296-24-47501(14).

(16) DOT specifications. Regulations of the department of transportation published in 49 CFR chapter I.

(17) DOT regulations. See WAC 296-24-47501(16).

(18) DOT requirements. See WAC 296-24-47501(16).

(19) DOT cylinders. Cylinders meeting the requirements of 49 CFR chapter I.

[Statutory Authority: Chapter 49.17 RCW. 88-23-054 (Order 88-25), § 296-24-47501, filed 11/14/88; Order 73-5, § 296-24-47501, filed 5/9/73 and Order 73-4, § 296-24-47501, filed 5/7/73.]

WAC 296-24-47503 Scope. (1) Application.

(a) WAC 296-24-47505 applies to installations made in accordance with the requirements of WAC 296-24-47507 through 296-24-47511, 296-24-47515 and 296-24-47517, except as noted in each of those sections.

(b) WAC 296-24-47507 through 296-24-47517 apply as provided in each of those sections.

(2) Inapplicability. These sections do not apply to:

(a) Marine and pipeline terminals, natural gas processing plants, refineries, or tank farms other than those at industrial sites.

(b) LP-gas refrigerated storage systems;

(c) LP-gas when used with oxygen. The requirements of WAC 296-24-680 through 296-24-722 shall apply to such use;

(d) LP-gas when used in utility gas plants. The National Fire Protection Association Standard for the Storage and Handling of Liquefied Petroleum Gases at Utility Gas Plants, NFPA No. 59-1968, shall apply to such use;

(e) Low-pressure (not in excess of one-half pound per square inch or 14 inches water column) LP-gas piping systems, and the installation and operation of residential and commercial appliances including their inlet connections, supplied through such systems. For such systems, the National Fire Protection Association Standard for the Installation of Gas Appliances and Gas Piping, NFPA 54-1969 shall apply.

(3) Retroactivity. Unless otherwise stated, it is not intended that the provisions of these sections be retroactive.

(a) Existing plants, appliances, equipment, buildings, structures, and installations for the storage, handling or use of LP-gas, which were in compliance with the current provisions of the National Fire Protection Association Standard for the Storage and Handling of Liquefied Petroleum Gases NFPA No. 58-1972, 1973 at the time of manufacture or installation may be continued in use, if such continued use does not constitute a recognized hazard that is causing or is likely to cause death or serious physical harm to employees.

(b) Stocks of equipment and appliances on hand in such locations as manufacturers' storage, distribution warehouses, and dealers' storage and showrooms, which were in compliance with the current provisions of the National Fire Protection Association Standard for the Storage and Handling of Liquefied Petroleum Gases, NFPA No. 58-1972, 1973, at the time of manufacture, may be placed in service, if such use does not constitute a recognized hazard that is causing or is likely to cause death or serious physical harm to employees.

[Order 73-5, § 296-24-47503, filed 5/9/73 and Order 73-4, § 296-24-47503, filed 5/7/73.]

WAC 296-24-47505 Basic rules. (1) Odorizing gases.

(a) All liquefied petroleum gases shall be effectively odorized by an approved agent of such character as to indicate positively, by distinct odor, the presence of gas down to concentration in air of not over one-fifth the lower limit of flammability. Odorization, however, is not required if harmful in the use of further processing of the liquefied petroleum gas, or if odorization will serve no useful purpose as a warning agent in such use or further processing.

(b) The odorization requirement of (a) of this subsection shall be considered to be met by the use of 1.0 pounds of ethyl mercaptan, 1.0 pounds of thiophane or 1.4 pounds of amyl mercaptan per ten thousand gallons of LP-gas. However, this listing of odorants and quantities shall not exclude the use of other odorants that meet the odorization requirements of (a) of this subsection.

(2) Approval of equipment and systems.

(a) Each system utilizing DOT containers in accordance with 49 CFR Part 178 shall have its container valves, connectors, manifold valve assemblies, and regulators approved.

(b) Each system for domestic or commercial use utilizing containers of two thousand gallons or less water capacity, other than those constructed in accordance with 49 CFR Part 178, shall consist of a container assembly and one or more regulators, and may include other parts. The system as a unit or the container assembly as a unit, and the regulator or regulators, shall be individually listed.

(c) In systems utilizing containers of over two thousand gallons water capacity, each regulator, container, valve, excess flow valve, gaging device, and relief valve installed on or at the container, shall have its correctness as to design, construction, and performance determined by listing by a nationally recognized testing laboratory. Refer to federal regulation 29 CFR 1910.7 for definition of nationally recognized testing laboratory.

(d) The provisions of subsection (3)(a) of this section shall not be construed as prohibiting the continued use or reinstallation of containers constructed and maintained in accordance with the standard for the Storage and Handling of Liquefied Petroleum Gases NFPA No. 58 in effect at the time of fabrication.

(e) Containers used with systems embodied in this section and WAC 296-24-47509 (3)(c) and 296-24-47513, shall be constructed, tested, and stamped in accordance with DOT specifications effective at the date of their manufacture.

(3) Requirements for construction and original test of containers.

(a) Containers used with systems embodied in WAC 296-24-47509, 296-24-47513 through 296-24-47517, except as provided in WAC 296-24-47511 (3)(c), shall be designed, constructed, and tested in accordance with the Rules for Construction of Unfired Pressure Vessels, section VIII, Division 1, American Society of Mechanical Engineers (ASME) Boiler and Pressure Vessel Code, 1968 edition.

(b) Containers constructed according to the 1949 and earlier editions of the ASME Code do not have to comply with U-2 through U-10 and U-19 thereof. Containers constructed according to U-70 in the 1949 and earlier editions do not meet the requirements of this section.

(c) Containers designed, constructed, and tested prior to July 1, 1961, according to the Code for Unfired Pressure Vessels for Petroleum Liquids and Gases, 1951 edition with 1954 Addenda, of the American Petroleum Institute and the American Society of Mechanical Engineers shall be considered in conformance. Containers constructed according to API-ASME Code do not have to comply with section I or with appendix to section I. W-601 to W-606 inclusive in the 1943 and earlier editions do not apply.

(4) Welding of containers.

(a) Welding to the shell, head, or any other part of the container subject to internal pressure, shall be done in compliance with the code under which the tank was fabricated. Other welding is permitted only on saddle plates, lugs, or brackets attached to the container by the tank manufacturer.

(b) Where repair or modification involving welding of DOT containers is required, the container shall be returned to a qualified manufacturer making containers of the same type, and the repair or modification made in compliance with DOT regulations.

(5) Markings on container.

(a) Each container covered in subsection (3)(a) of this section except as provided in subsection (2)(d) of this section shall be marked as specified in the following:

(i) With a marking identifying compliance with, and other markings required by, the rules of the reference under which the container is constructed; or with the stamp and other markings required by the laws, rules or regulations as administered by the state of Washington, department of labor and industries pertaining to such containers.

(ii) With notation as to whether the container is designed for underground or aboveground installation or both. If intended for both and different style hoods are provided, the marking shall indicate the proper hood for each type of installation.

(iii) With the name and address of the supplier of the container, or with the trade name of the container.

(iv) With the water capacity of the container in pounds or gallons, United States standard.

(v) With the pressure in p.s.i.g., for which the container is designed.

(vi) With the wording "This container shall not contain a product having a vapor pressure in excess of—p.s.i.g. at 100°F," see WAC 296-24-47509, Table H-31.

(vii) With the tare weight in pounds or other identified unit of weight for containers with a water capacity of three hundred pounds or less.

(viii) With marking indicating the maximum level to which the container may be filled with liquid at temperatures between 20°F and 130°F, except on containers provided with fixed maximum level indicators or which are filled by weighing. Markings shall be increments of not more than 20°F. This marking may be located on the liquid level gaging device.

(ix) With the outside surface area in square feet.

(b) Markings specified shall be on a metal nameplate attached to the container and located in such a manner as to remain visible after the container is installed.

(c) When LP-gas and one or more other gases are stored or used in the same area, the containers shall be marked to identify their content. Marking shall be in compliance with American National Standard Z48.1-1954, "Method of Marking Portable Compressed Gas Containers to Identify the Material Contained."

(6) Location of containers and regulating equipment.

(a) Containers, and first stage regulating equipment if used, shall be located outside of buildings, except under one or more of the following:

(i) In buildings used exclusively for container charging, vaporization pressure reduction, gas mixing, gas manufacturing, or distribution.

(ii) When portable use is necessary and in accordance with WAC 296-24-47507(5).

(iii) LP-gas fueled stationary or portable engines in accordance with WAC 296-24-47511 (11) or (12).

(iv) LP-gas fueled industrial trucks used in accordance with WAC 296-24-47511(13).

(v) LP-gas fueled vehicles garaged in accordance with WAC 296-24-47511(14).

(vi) Containers awaiting use or resale when stored in accordance with WAC 296-24-47513.

(b) Each individual container shall be located with respect to the nearest important building or group of buildings or line of adjoining property which may be built on in accordance with Table H-23.

TABLE H-23

Water capacity per container	Minimum distances: Containers: Underground	Minimum distances: Containers: Aboveground	Minimum distances: Between aboveground containers
Less than 125 gals[1]	10 feet	None	None
125 to 250 gallons	10 feet	10 feet	None.
251 to 500 gallons	10 feet	10 feet	3 feet.
501 to 2,000 gallons	25 feet[2]	25 feet[2]	3 feet.
2,001 to 30,000 gallons	50 feet	50 feet	5 feet.
30,001 to 70,000 gallons	50 feet	75 feet	1/4 of sum diameters of adjacent containers.
70,001 to 90,000 gallons	50 feet	100 feet	

[1]If the aggregate water capacity of a multicontainer installation at a consumer site is five hundred one gallons or greater, the minimum distance shall comply with the appropriate portion of this table, applying the aggregate capacity rather than the capacity per container. If more than one installation is made, each installation shall be separated from another installation by at least twenty-five feet. Do not apply the MINIMUM DISTANCES BETWEEN ABOVE-GROUND CONTAINERS to such installations.

[2]Note: The above distance requirements may be reduced to not less than ten feet for a single container of one thousand two hundred gallons water capacity or less, providing such a container is at least twenty-five feet from any other LP-gas con-

tainer of more than one hundred twenty-five gallons water capacity.

(c) Containers installed for use shall not be stacked one above the other.

(d) In industrial installations involving containers of one hundred eighty thousand gallons aggregate water capacity or more, where serious mutual exposures between the container and adjacent properties prevail, firewalls or other means of special protection designed and constructed in accordance with good engineering practices are required.

(e) In the case of buildings devoted exclusively to gas manufacturing and distributing operations, the distances required by Table H-23 may be reduced provided that in no case shall containers of water capacity exceeding five hundred gallons be located closer than ten feet to such gas manufacturing and distributing buildings.

(f) Readily ignitible material such as weeds and long dry grass shall be removed within ten feet of any container.

(g) The minimum separation between liquefied petroleum gas containers and flammable liquid tanks shall be twenty feet, and the minimum separation between a container and the centerline of the dike shall be ten feet. The foregoing provision shall not apply when LP-gas containers of one hundred twenty-five gallons or less capacity are installed adjacent to Class III flammable liquid tanks of two hundred seventy-five gallons or less capacity.

(h) Suitable means shall be taken to prevent the accumulation of flammable liquids under adjacent liquefied petroleum gas containers, such as by diking, diversion curbs, or grading.

(i) When dikes are used with flammable liquid tanks, no liquefied petroleum gas containers shall be located within the diked area.

(7) Container valves and container accessories.

(a) Valves, fittings, and accessories connected directly to the container including primary shutoff valves, shall have a rated working pressure of at least 250 p.s.i.g. and shall be of material and design suitable for LP-gas service. Cast iron shall not be used for container valves, fittings, and accessories. This does not prohibit the use of container valves made of malleable or nodular iron.

(b) Connections to containers, except safety relief connections, liquid level gaging devices, and plugged openings, shall have shutoff valves located as close to the container as practicable.

(c) Excess flow valves, where required shall close automatically at the rated flows of vapor or liquid as specified by the manufacturer. The connections or line including valves, fittings, etc., being protected by an excess flow valve shall have a greater capacity than the rated flow of the excess flow valve.

(d) Liquid level gaging devices which are so constructed that outward flow of container contents shall not exceed that passed by a No. 54 drill size opening, need not be equipped with excess flow valves.

(e) Openings from container or through fittings attached directly on container to which pressure gage connection is made, need not be equipped with shutoff or excess flow valves if such openings are restricted to not larger than No. 54 drill size opening.

(f) Except as provided in WAC 296-24-47507 (5)(a)(ii), excess flow and back pressure check valves where required by this section shall be located inside of the container or at a point outside where the line enters the container; in the latter case, installation shall be made in such manner that any undue strain beyond the excess flow or back pressure check valve will not cause breakage between the container and such valve.

(g) Excess flow valves shall be designed with a bypass, not to exceed a No. 60 drill size opening to allow equalization of pressures.

(h) Containers of more than thirty gallons water capacity and less than two thousand gallons water capacity, filled on a volumetric basis, and manufactured after December 1, 1963, shall be equipped for filling into the vapor space.

(8) Piping—Including pipe, tubing, and fittings.

(a) Pipe, except as provided in WAC 296-24-47511 (6)(a) shall be wrought iron or steel (black or galvanized), brass, copper, or aluminum alloy. Aluminum alloy pipe shall be at least Schedule 40 in accordance with the specifications for Aluminum Alloy Pipe, American National Standards Institute (ANSI) H38.7-1969 (ASTM, B241-1969), except that the use of alloy 5456 is prohibited and shall be suitably marked at each end of each length indicating compliance with American National Standard Institute specifications. Aluminum alloy pipe shall be protected against external corrosion when it is in contact with dissimilar metals other than galvanized steel, or its location is subject to repeated wetting by such liquids as water (except rain water), detergents, sewage, or leaking from other piping, or it passes through flooring, plaster, masonry, or insulation. Galvanized sheet steel or pipe, galvanized inside and out, may be considered suitable protection. The maximum nominal pipe size for aluminum pipe shall be three-fourths inch and shall not be used for pressures exceeding 20 p.s.i.g. Aluminum alloy pipe shall not be installed within six inches of the ground.

(i) Vapor piping with operating pressures not exceeding 125 p.s.i.g. shall be suitable for a working pressure of at least 125 p.s.i.g. Pipe shall be at least Schedule 40 ASTM A-53-69, Grade B Electric Resistance Welded and Electric Flash Welded Pipe or equal.

(ii) Vapor piping with operating pressures over 125 p.s.i.g. and all liquid piping shall be suitable for a working pressure of at least 250 p.s.i.g. Pipe shall be at least Schedule 80 if joints are threaded or threaded and back welded. At least Schedule 40 (ASTM A-53-1969 Grade B Electric Resistance Welded and Electric Flash Welded Pipe or equal) shall be used if joints are welded, or welded and flanged.

(b) Tubing shall be seamless and of copper, brass, steel, or aluminum alloy. Copper tubing shall be of Type K or L or equivalent as covered in the Specification for Seamless Copper Water Tube, ANSI H23.1-1970 (ASTM B88-1969). Aluminum alloy tubing shall be of Type A or B or equivalent as covered in Specification ASTM B210-1968 and shall be suitably marked every eighteen inches indicating compliance with ASTM specifications. The minimum nominal wall thickness of copper tubing and aluminum alloy tubing shall be as specified in Table H-24 and Table H-25.

TABLE H-24
WALL THICKNESS OF COPPER TUBING[1]

Note: The standard size by which tube is designated is one-eighth-inch smaller than its nominal outside diameter.

Standard size (inches)	Nominal O.D. (inches)	Nominal wall thickness (inches)	
		Type K	Type L
1/4	0.375	0.035	0.030
3/8	0.500	0.049	0.035
1/2	0.625	0.049	0.040
5/8	0.750	0.049	0.042
3/4	0.875	0.065	0.045
1	1.125	0.065	0.050
1 1/4	1.375	0.065	0.055
1 1/2	1.625	0.072	0.060
2	2.125	0.083	0.070

[1]Based on data in Specification for Seamless Copper Water Tubing, ANSI H23.1-1970 (ASTM B-88-69).

TABLE H-25
WALL THICKNESS OF ALUMINUM ALLOY TUBING[1]

Outside diameter (inches)	Nominal wall thickness (inches)	
	Type A	Type B
3/8	0.035	0.049
1/2	0.035	0.049
5/8	0.042	0.049
3/4	0.049	0.058

[1]Based on data in Standard Specification for Aluminum-Alloy Drawn Seamless Coiled Tubes for Special Purpose Applications, ASTM B210-68.

Aluminum alloy tubing shall be protected against external corrosion when it is in contact with dissimilar metals other than galvanized steel, or its location is subject to repeated wetting by liquids such as water (except rainwater), detergents, sewage, or leakage from other piping, or it passes through flooring, plaster, masonry, or insulation. Galvanized sheet steel or pipe, galvanized inside and out, may be considered suitable protection. The maximum outside diameter for aluminum alloy tubing shall be three-fourths inch and shall not be used for pressures exceeding 20 p.s.i.g. Aluminum alloy tubing shall not be installed within six inches of the ground.

(c) In systems where the gas in liquid form without pressure reduction enters the building, only heavy walled seamless brass or copper tubing with an internal diameter not greater than three thirty-seconds inch, and a wall thickness of not less than three sixty-fourths inch shall be used. This requirement shall not apply to research and experimental laboratories, buildings, or separate fire divisions of buildings used exclusively for housing internal combustion engines, and to commercial gas plants or bulk stations where containers are charged, nor to industrial vaporizer buildings, nor to buildings, structures, or equipment under construction or undergoing major renovation.

(d) Pipe joints may be screwed, flanged, welded, soldered, or brazed with a material having a melting point exceeding 1,000°F. Joints on seamless copper, brass, steel, or aluminum alloy gas tubing shall be made by means of approved gas tubing fittings, or soldered or brazed with a material having a melting point exceeding 1,000°F.

(e) For operating pressures of 125 p.s.i.g. or less, fittings shall be designed for a pressure of at least 125 p.s.i.g. For operating pressures above 125 p.s.i.g., fittings shall be designed for a minimum of 250 p.s.i.g.

(f) The use of threaded cast iron pipe fittings such as ells, tees, crosses, couplings, and unions is prohibited. Aluminum alloy fittings shall be used with aluminum alloy pipe and tubing. Insulated fittings shall be used where aluminum alloy pipe or tubing connects with a dissimilar metal.

(g) Strainers, regulators, meters, compressors, pumps, etc., are not to be considered as pipe fittings. This does not prohibit the use of malleable, nodular, or higher strength gray iron for such equipment.

(h) All materials such as valve seats, packing, gaskets, diaphragms, etc., shall be of such quality as to be resistant to the action of liquefied petroleum gas under the service conditions to which they are subjected.

(i) All piping, tubing, or hose shall be tested after assembly and proved free from leaks at not less than normal operating pressures. After installation, piping and tubing of all domestic and commercial systems shall be tested and proved free of leaks using a manometer or equivalent device that will indicate a drop in pressure. Test shall not be made with a flame.

(j) Provision shall be made to compensate for expansion, contraction, jarring, and vibration, and for settling. This may be accomplished by flexible connections.

(k) Piping outside buildings may be buried, above ground, or both, but shall be well supported and protected against physical damage. Where soil conditions warrant, all piping shall be protected against corrosion. Where condensation may occur, the piping shall be pitched back to the container, or suitable means shall be provided for revaporization of the condensate.

(9) Hose specifications.

(a) Hose shall be fabricated of materials that are resistant to the action of LP-gas in the liquid and vapor phases. If wire braid is used for reinforcing the hose, it shall be of corrosion-resistant material such as stainless steel.

(b) Hose subject to container pressure shall be marked "LP-gas" or "LPG" at not greater than ten-foot intervals.

(c) Hose subject to container pressure shall be designed for a bursting pressure of not less than 1,250 p.s.i.g.

(d) Hose subject to container pressure shall have its correctness as to design construction and performance determined by being listed (see WAC 296-24-47501(15)).

(e) Hose connections subject to container pressure shall be capable of withstanding, without leakage, a test pressure of not less than 500 p.s.i.g.

(f) Hose and hose connections on the low-pressure side of the regulator or reducing valve shall be designed for a bursting pressure of not less than 125 p.s.i.g. or five times the set pressure of the relief devices protecting that portion of the system, whichever is higher.

(g) Hose may be used on the low-pressure side of regulators to connect to other than domestic and commercial gas appliances under the following conditions:

(i) The appliances connected with hose shall be portable and need a flexible connection.

(ii) For use inside buildings the hose shall be of minimum practical length, but shall not exceed six feet except as provided in WAC 296-24-47507 (5)(a)(vii) and shall not extend from one room to another, nor pass through any walls,

partitions, ceilings, or floors. Such hose shall not be concealed from view or used in a concealed location. For use outside of buildings, the hose may exceed this length but shall be kept as short as practical.

(iii) The hose shall be approved and shall not be used where it is likely to be subjected to temperatures above 125°F. The hose shall be securely connected to the appliance and the use of rubber slip ends shall not be permitted.

(iv) The shutoff valve for an appliance connected by hose shall be in the metal pipe or tubing and not at the appliance end of the hose. When shutoff valves are installed close to each other, precautions shall be taken to prevent operation of the wrong valve.

(v) Hose used for connecting to wall outlets shall be protected from physical damage.

(10) Safety devices.

(a) Every container except those constructed in accordance with DOT specifications and every vaporizer (except motor fuel vaporizers and except vaporizers described in subsection (11)(b)(iii) of this section and WAC 296-24-47509 (4)(e)(i)) whether heated by artificial means or not, shall be provided with one or more safety relief valves of spring-loaded or equivalent type. These valves shall be arranged to afford free vent to the outer air with discharge not less than five feet horizontally away from any opening into the building which is below such discharge. The rate of discharge shall be in accordance with the requirements of (b) or (d) of this subsection in the case of vaporizers.

(b) Minimum required rate of discharge in cubic feet per minute of air at one hundred twenty percent of the maximum permitted start to discharge pressure for safety relief valves to be used on containers other than those constructed in accordance with DOT specification shall be as follows:

Surface area (sq. ft.)	Flow rate CFM air
20 or less	626
25	751
30	872
35	990
40	1,100
45	1,220
50	1,330
55	1,430
60	1,540
65	1,640
70	1,750
75	1,850
80	1,950
85	2,050
90	2,150
95	2,240
100	2,340
105	2,440
110	2,530
115	2,630
120	2,720
125	2,810
130	2,900
135	2,990
140	3,080
145	3,170
150	3,260
155	3,350
160	3,440
165	3,530
170	3,620
175	3,700
180	3,790
185	3,880
190	3,960
195	4,050
200	4,130
210	4,300
220	4,470
230	4,630
240	4,800
250	4,960
260	5,130
270	5,290
280	5,450
290	5,610
300	5,760
310	5,920
320	6,080
330	6,230
340	6,390
350	6,540
360	6,690
370	6,840
380	7,000
390	7,150
400	7,300
450	8,040
500	8,760
550	9,470
600	10,170
650	10,860
700	11,550
750	12,220
800	12,880
850	13,540
900	14,190
950	14,830
1,000	15,470
1,050	16,100
1,100	16,720
1,150	17,350
1,200	17,960
1,250	18,570
1,300	19,180
1,350	19,780
1,400	20,380
1,450	20,980
1,500	21,570
1,550	22,160
1,600	22,740
1,650	23,320
1,700	23,900
1,750	24,470
1,800	25,050
1,850	25,620
1,900	26,180
1,950	26,750
2,000	27,310

Surface area = total outside surface area of container in square feet.

(c) When the surface area is not stamped on the nameplate or when the marking is not legible, the area can be calculated by using one of the following formulas:

(i) Cylindrical container with hemispherical heads:

Area = Overall length x outside diameter x 3.1416.

(ii) Cylindrical container with other than hemispherical heads:

Area = (Overall length + 0.3 outside diameter) x outside diameter x 3.1416.

Note: This formula is not exact, but will give results within the limits of practical accuracy for the sole purpose of sizing relief valves.

(iii) Spherical container:

Area = Outside diameter squared x 3.1416.

Flow rate-CFM air = Required flow capacity in cubic feet per minute of air at standard conditions, 60°F and atmospheric pressure (14.7 p.s.i.a.).

The rate of discharge may be interpolated for intermediate values of surface area. For containers with total outside surface area greater than two thousand square feet, the required flow rate can be calculated using the formula, flow rate-CFM air = 53.632 $A^{0.82}$.

A = Total outside surface area of the container in square feet.

Valves not marked "air" have flow rate marking in cubic feet per minute of liquefied petroleum gas. These can be converted to ratings in cubic feet per minute of air by multiplying the liquefied petroleum gas ratings by factors listed below. Air flow ratings can be converted to ratings in cubic feet per minute of liquefied petroleum gas by dividing the air ratings by the factors listed below.

AIR CONVERSION FACTORS

Container type	100	125	150	175	200
Air conversion factor	1.162	1.142	1.113	1.078	1.010

(d) Minimum required rate of discharge for safety relief valves for liquefied petroleum gas vaporizers (steam heated, water heated, and direct fired).

The minimum required rate of discharge for safety relief valves shall be determined as follows:

(i) Obtain the total surface area by adding the surface area of vaporizer shell in square feet directly in contact with LP-gas and the heat exchanged surface area in square feet directly in contact with LP-gas.

(ii) Obtain the minimum required rate of discharge in cubic feet of air per minute, at 60°F and 14.7 p.s.i.a. from (b) of this subsection, for this total surface area.

(e) Container and vaporizer safety relief valves shall be set to start-to-discharge, with relation to the design pressure of the container, in accordance with Table H-26.

TABLE H-26

Containers	Minimum (percent)	Maximum (percent)
ASME Code; Par. U-68, U-69—1949 and earlier editions	110	[1]125
ASME Code; Par. U-200, U-201—1949 edition	88	[1]100
ASME Code—1950, 1952, 1956, 1959, 1962, 1965 and 1968 (Division I) editions	88	[1]100
API—ASME Code—all editions	88	[1]100
DOT—As prescribed in 49 CFR Chapter I		

[1]Manufacturers of safety relief valves are allowed a plus tolerance not exceeding ten percent of the set pressure marked on the valve.

(f) Safety relief devices used with systems employing containers other than those constructed according to DOT specifications shall be so constructed as to discharge at not less than the rates shown in (b) of this subsection, before the pressure is in excess of one hundred twenty percent of the maximum (not including the ten percent referred to in (e) of this subsection) permitted start to discharge pressure setting of the device.

(g) In certain locations sufficiently sustained high temperatures prevail which require the use of a lower vapor pressure product to be stored or the use of a higher designed pressure vessel in order to prevent the safety valves opening as the result of these temperatures. As an alternative the tanks may be protected by cooling devices such as by spraying, by shading, or other effective means.

(h) Safety relief valves shall be arranged so that the possibility of tampering will be minimized. If pressure setting or adjustment is external, the relief valves shall be provided with approved means for sealing adjustment.

(i) Shutoff valves shall not be installed between the safety relief devices and the container, or the equipment or piping to which the safety relief device is connected except that a shutoff valve may be used where the arrangement of this valve is such that full required capacity flow through the safety relief device is always afforded.

(j) Safety relief valves shall have direct communication with the vapor space of the container at all times.

(k) Each container safety relief valve used with systems covered by WAC 296-24-47509, 296-24-47511, and 296-24-47517, except as provided in WAC 296-24-47511 (3)(c) shall be plainly and permanently marked with the following: "Container type" of the pressure vessel on which the valve is designed to be installed; the pressure in p.s.i.g. at which the valve is set to discharge; the actual rate of discharge of the valve in cubic feet per minute of air at 60°F and 14.7 p.s.i.a.; and the manufacturer's name and catalog number, for example: T200-250-4050 AIR—indicating that the valve is suitable for use on a Type 200 container, that it is set to start to discharge at 250 p.s.i.g.; and that its rate of discharge is four thousand fifty cubic feet per minute of air as determined in (b) of this subsection.

(l) Safety relief valve assemblies, including their connections, shall be of sufficient size so as to provide the rate of flow required for the container on which they are installed.

(m) A hydrostatic relief valve shall be installed between each pair of shutoff valves on liquefied petroleum gas liquid piping so as to relieve into a safe atmosphere. The start-to-discharge pressure setting of such relief valves shall not be in excess of 500 p.s.i.g. The minimum setting on relief valves installed in piping connected to other than DOT containers shall not be lower than one hundred forty percent of the container relief valve setting and in piping connected to DOT containers not lower than 400 p.s.i.g. Such a relief valve should not be installed in the pump discharge piping if the

same protection can be provided by installing the relief valve in the suction piping. The start-to-discharge pressure setting of such a relief valve, if installed on the discharge side of a pump, shall be greater than the maximum pressure permitted by the recirculation device in the system.

(n) The discharge from any safety relief device shall not terminate in or beneath any building, except relief devices covered by subsection (6)(a)(i) through (vi) of this section, or WAC 296-24-47507 (4)(a) or (5).

(o) Container safety relief devices and regulator relief vents shall be located not less than five feet in any direction from air openings into sealed combustion system appliances or mechanical ventilation air intakes.

(11) Vaporizer and housing.

(a) Indirect fired vaporizers utilizing steam, water, or other heating medium shall be constructed and installed as follows:

(i) Vaporizers shall be constructed in accordance with the requirements of subsection (3)(a) through (c) of this section and shall be permanently marked as follows:

(A) With the code marking signifying the specifications to which the vaporizer is constructed.

(B) With the allowable working pressure and temperature for which the vaporizer is designed.

(C) With the sum of the outside surface area and the inside heat exchange surface area expressed in square feet.

(D) With the name or symbol of the manufacturer.

(ii) Vaporizers having an inside diameter of six inches or less exempted by the ASME Unfired Pressure Vessel Code, Section VIII of the ASME Boiler and Pressure Vessel Code—1968 shall have a design pressure not less than 250 p.s.i.g. and need not be permanently marked.

(iii) Heating or cooling coils shall not be installed inside a storage container.

(iv) Vaporizers may be installed in buildings, rooms, sheds, or lean-tos used exclusively for gas manufacturing or distribution, or in other structures of light, noncombustible construction or equivalent, well ventilated near the floor line and roof.

When vaporizing and/or mixing equipment is located in a structure or building not used exclusively for gas manufacturing or distribution, either attached to or within such a building, such structure or room shall be separated from the remainder of the building by a wall designed to withstand a static pressure of at least one hundred pounds per square foot. This wall shall have no openings or pipe or conduit passing through it. Such structure or room shall be provided with adequate ventilation and shall have a roof or at least one exterior wall of lightweight construction.

(v) Vaporizers shall have, at or near the discharge, a safety relief valve providing an effective rate of discharge in accordance with subsection (10)(d) of this section, except as provided in WAC 296-24-47509 (4)(e)(i).

(vi) The heating medium lines into and leaving the vaporizer shall be provided with suitable means for preventing the flow of gas into the heat systems in the event of tube rupture in the vaporizer. Vaporizers shall be provided with suitable automatic means to prevent liquid passing through the vaporizers to the gas discharge piping.

(vii) The device that supplies the necessary heat for producing steam, hot water, or other heating medium may be installed in a building, compartment, room, or lean-to which shall be ventilated near the floorline and roof to the outside. The device location shall be separated from all compartments or rooms containing liquefied petroleum gas vaporizers, pumps, and central gas mixing devices by a wall designed to withstand a static pressure of at least one hundred pounds per square foot. This wall shall have no openings or pipes or conduit passing through it. This requirement does not apply to the domestic water heaters which may supply heat for a vaporizer in a domestic system.

(viii) Gas-fired heating systems supplying heat exclusively for vaporization purposes shall be equipped with automatic safety devices to shut off the flow of gas to main burners, if the pilot light should fail.

(ix) Vaporizers may be an integral part of a fuel storage container directly connected to the liquid section or gas section or both.

(x) Vaporizers shall not be equipped with fusible plugs.

(xi) Vaporizer houses shall not have unprotected drains to sewers or sump pits.

(b) Atmospheric vaporizers employing heat from the ground or surrounding air shall be installed as follows:

(i) Buried underground, or

(ii) Located inside the building close to a point at which pipe enters the building provided the capacity of the unit does not exceed one quart.

(iii) Vaporizers of less than one quart capacity heated by the ground or surrounding air, need not be equipped with safety relief valves provided that adequate tests demonstrate that the assembly is safe without safety relief valves.

(c) Direct gas-fired vaporizers shall be constructed, marked, and installed as follows:

(i) In accordance with the requirements of the American Society of Mechanical Engineers Boiler and Pressure Vessel Code—1968 that are applicable to the maximum working conditions for which the vaporizer is designed.

(ii) With the name of the manufacturer; rated BTU input to the burner; the area of the heat exchange surface in square feet; the outside surface of the vaporizer in square feet; and the maximum vaporizing capacity in gallons per hour.

(iii) Vaporizers may be connected to the liquid section or the gas section of the storage container, or both; but in any case there shall be at the container a manually operated valve in each connection to permit completely shutting off when desired, of all flow of gas or liquid from container to vaporizer.

(iv) Vaporizers with capacity not exceeding thirty-five gallons per hour shall be located at least five feet from container shutoff valves. Vaporizers having capacity of more than thirty-five gallons but not exceeding one hundred gallons per hour shall be located at least ten feet from the container shutoff valves. Vaporizers having a capacity greater than one hundred gallons per hour shall be located at least fifteen feet from container shutoff valves.

(v) Vaporizers may be installed in buildings, rooms, housings, sheds, or lean-tos used exclusively for vaporizing or mixing of liquefied petroleum gas. Vaporizing housing structures shall be of noncombustible construction, well ventilated near the floorline and the highest point of the roof. When vaporizer and/or mixing equipment is located in a structure or room attached to or within a building, such struc-

ture or room shall be separated from the remainder of the building by a wall designed to withstand a static pressure of at least one hundred pounds per square foot. This wall shall have no openings or pipes or conduit passing through it. Such structure or room shall be provided with adequate ventilation, and shall have a roof or at least one exterior wall of lightweight construction.

(vi) Vaporizers shall have at or near the discharge, a safety relief valve providing an effective rate of discharge in accordance with subsection (10)(d) of this section. The relief valve shall be so located as not to be subjected to temperatures in excess of 140°F.

(vii) Vaporizers shall be provided with suitable automatic means to prevent liquid passing from the vaporizer to the gas discharge piping of the vaporizer.

(viii) Vaporizers shall be provided with means for manually turning off the gas to the main burner and pilot.

(ix) Vaporizers shall be equipped with automatic safety devices to shut off the flow of gas to main burners if the pilot light should fail. When the flow through the pilot exceeds 2,000 B.T.U. per hour, the pilot also shall be equipped with an automatic safety device to shut off the flow of gas to the pilot should the pilot flame be extinguished.

(x) Pressure regulating and pressure reducing equipment if located within ten feet of a direct fired vaporizer shall be separated from the open flame by a substantially airtight noncombustible partition or partitions.

(xi) Except as provided in (c)(v) of this subsection, the following minimum distances shall be maintained between direct fired vaporizers and the nearest important building or group of buildings or line of adjoining property which may be built upon:

(A) Ten feet for vaporizers having a capacity of fifteen gallons per hour or less vaporizing capacity.

(B) Twenty-five feet for vaporizers having a vaporizing capacity of sixteen to one hundred gallons per hour.

(C) Fifty feet for vaporizers having a vaporizing capacity exceeding one hundred gallons per hour.

(xii) Direct fired vaporizers shall not raise the product pressure above the design pressure of the vaporizer equipment nor shall they raise the product pressure within the storage container above the pressure shown in the second column of Table H-31.(See WAC 296-24-47509.)

(xiii) Vaporizers shall not be provided with fusible plugs.

(xiv) Vaporizers shall not have unprotected drains to sewers or sump pits.

(d) Direct gas-fired tank heaters, shall be constructed and installed as follows:

(i) Direct gas-fired tank heaters, and tanks to which they are applied, shall only be installed above ground.

(ii) Tank heaters shall be permanently marked with the name of the manufacturer, the rated B.T.U. input to the burner, and the maximum vaporizing capacity in gallons per hour.

Note: Tank heaters may be an integral part of a fuel storage container directly connected to the container liquid section, or vapor section, or both.

(iii) Tank heaters shall be provided with a means for manually turning off the gas to the main burner and pilot.

(iv) Tank heaters shall be equipped with an automatic safety device to shut off the flow of gas to main burners, if the pilot light should fail. When flow through pilot exceeds 2,000 B.T.U. per hour, the pilot also shall be equipped with an automatic safety device to shut off the flow of gas to the pilot should the pilot flame be extinguished.

(v) Pressure regulating and pressure reducing equipment if located within ten feet of a direct fired tank heater shall be separated from the open flame by a substantially airtight noncombustible partition.

(vi) The following minimum distances shall be maintained between a storage tank heated by a direct fired tank heater and the nearest important building or group of buildings or line of adjoining property which may be built upon:

(A) Ten feet for storage containers of less than five hundred gallons water capacity.

(B) Twenty-five feet for storage containers of five hundred to one thousand two hundred gallons water capacity.

(C) Fifty feet for storage containers of over one thousand two hundred gallons water capacity.

(vii) No direct fired tank heater shall raise the product pressure within the storage container over seventy-five percent of the pressure set out in the second column of Table H-31. (See WAC 296-24-47509.)

(e) The vaporizer section of vaporizer-burners used for dehydrators or dryers shall be located outside of buildings; they shall be constructed and installed as follows:

(i) Vaporizer-burners shall have a minimum design pressure of 250 p.s.i.g. with a factor of safety of five.

(ii) Manually operated positive shutoff valves shall be located at the containers to shut off all flow to the vaporizer-burners.

(iii) Minimum distances between storage containers and vaporizer-burners shall be as follows:

Water capacity per container (gallons)	Minimum distances (feet)
Less than 501	10
501 to 2,000	25
Over 2,000	50

(iv) The vaporizer section of vaporizer-burners shall be protected by a hydrostatic relief valve. The relief valve shall be located so as not to be subjected to temperatures in excess of 140°F. The start-to-discharge pressure setting shall be such as to protect the components involved, but not less than 250 p.s.i.g. The discharge shall be directed upward and away from component parts of the equipment and away from operating personnel.

(v) Vaporizer-burners shall be provided with means for manually turning off the gas to the main burner and pilot.

(vi) Vaporizer-burners shall be equipped with automatic safety devices to shut off the flow of gas to the main burner and pilot in the event the pilot is extinguished.

(vii) Pressure regulating and control equipment shall be located or protected so that the temperatures surrounding this equipment shall not exceed 140°F except that equipment components may be used at higher temperatures if designed to withstand such temperatures.

(viii) Pressure regulating and control equipment when located downstream of the vaporizer shall be designed to withstand the maximum discharge temperature of the vapor.

(ix) The vaporizer section of vaporizer-burners shall not be provided with fusible plugs.

(x) Vaporizer coils or jackets shall be made of ferrous metal or high temperature alloys.

(xi) Equipment utilizing vaporizer-burners shall be equipped with automatic shutoff devices upstream and downstream of the vaporizer section connected so as to operate in the event of excessive temperature, flame failure, and, if applicable, insufficient airflow.

(12) Filling densities.

(a) The "filling density" is defined as the percent ratio of the weight of the gas in a container to the weight of water the container will hold at 60°F. All containers shall be filled according to the filling densities shown in Table H-27.

TABLE H-27

MAXIMUM PERMITTED FILLING DENSITY

Specific gravity at 60°F (15.6°C)	Above ground containers: 0 to 1,200 U.S. gals. (1,000 imp. gal. 4,550 liters) total water cap.	Above ground containers: Over 1,200 U.S. gals. (1,000 imp. gals. 4,550 liters) total water cap.	Underground containers, all capacities
	Percent	Percent	Percent
0.496-0.503	41	44	45
.504-.510	42	45	46
.511-.519	43	46	47
.520-.527	44	47	48
.528-.536	45	48	49
.537-.544	46	49	50
.545-.552	47	50	51
.553-.560	48	51	52
.561-.568	49	52	53
.569-.576	50	53	54
.577-.584	51	54	55
.585-.592	52	55	56
.593-.600	53	56	57

(b) Except as provided in (c) of this subsection, any container including mobile cargo tanks and portable tank containers regardless of size or construction, shipped under DOT jurisdiction or constructed in accordance with 49 CFR Chapter I specifications shall be charged according to 49 CFR Chapter I requirements.

(c) Portable containers not subject to DOT jurisdiction (such as, but not limited to, motor fuel containers on industrial and lift trucks, and farm tractors covered in subsection (5) of this section, or containers recharged at the installation) may be filled either by weight, or by volume using a fixed length dip tube gaging device.

(13) LP-gas in buildings.

(a) Vapor shall be piped into buildings at pressures in excess of 20 p.s.i.g. only if the buildings or separate areas thereof,

(i) Are constructed in accordance with this section;

(ii) Are used exclusively to house equipment for vaporization, pressure reduction, gas mixing, gas manufacturing, or distribution, or to house internal combustion engines, industrial processes, research and experimental laboratories, or equipment and processes using such gas and having similar hazard;

(iii) Buildings, structures, or equipment under construction or undergoing major renovation.

(b) Liquid may be permitted in buildings as follows:

(i) Buildings, or separate areas of buildings, used exclusively to house equipment for vaporization, pressure reduction, gas mixing, gas manufacturing, or distribution, or to house internal combustion engines, industrial processes, research and experimental laboratories, or equipment and processes using such gas and having similar hazard; and when such buildings, or separate areas thereof are constructed in accordance with this section.

(ii) Buildings, structures, or equipment under construction or undergoing major renovation provided the temporary piping meets the following conditions:

(A) Liquid piping inside the building shall conform to the requirements of subsection (8) of this section, and shall not exceed three-fourths iron pipe size. Copper tubing with an outside diameter of three-fourths inch or less may be used provided it conforms to Type K of Specifications for Seamless Water Tube, ANSI H23.1-1970 (ASTM B88-1969) (see WAC 296-24-47505 Table H-24). All such piping shall be protected against construction hazards. Liquid piping inside buildings shall be kept to a minimum. Such piping shall be securely fastened to walls or other surfaces so as to provide adequate protection from breakage and so located as to subject the liquid line to lowest ambient temperatures.

(B) A shutoff valve shall be installed in each intermediate branch line where it takes off the main line and shall be readily accessible. A shutoff valve shall also be placed at the appliance end of the intermediate branch line. Such shutoff valve shall be upstream of any flexible connector used with the appliance.

(C) Suitable excess flow valves shall be installed in the container outlet line supplying liquid LP-gas to the building. A suitable excess flow valve shall be installed immediately downstream of each shutoff valve. Suitable excess flow valves shall be installed where piping size is reduced and shall be sized for the reduced size piping.

(D) Hydrostatic relief valves shall be installed in accordance with subsection (10)(m) of this section.

(E) The use of hose to carry liquid between the container and the building or at any point in the liquid line, except at the appliance connector, shall be prohibited.

(F) Where flexible connectors are necessary for appliance installation, such connectors shall be as short as practicable and shall comply with subsection (8)(b) or (9) of this section.

(G) Release of fuel when any section of piping or appliances is disconnected shall be minimized by either of the following methods:

(I) Using an approved automatic quick-closing coupling (a type closing in both directions when coupled in the fuel line), or

(II) Closing the valve nearest to the appliance and allowing the appliance to operate until the fuel in the line is consumed.

(III) Portable containers shall not be taken into buildings except as provided in subsection (6)(a) of this section.

(14) Transfer of liquids. The employer shall assure that:

(a) At least one attendant shall remain close to the transfer connection from the time the connections are first made until they are finally disconnected, during the transfer of the product.

(b) Containers shall be filled or used only upon authorization of the owner.

(c) Containers manufactured in accordance with specifications of 49 CFR Part 178 and authorized by 49 CFR Chapter 1 as a "single trip" or "nonrefillable container" shall not be refilled or reused in LP-gas service.

(d) Gas or liquid shall not be vented to the atmosphere to assist in transferring contents of one container to another, except as provided in WAC 296-24-47511 (5)(d) and except that this shall not preclude the use of listed pump utilizing LP-gas in the vapor phase as a source of energy and venting such gas to the atmosphere at a rate not to exceed that from a No. 31 drill size opening and provided that such venting and liquid transfer shall be located not less than fifty feet from the nearest important building.

(e) Filling of fuel containers for industrial trucks or motor vehicles from industrial bulk storage containers shall be performed not less than ten feet from the nearest important masonry-walled building or not less than twenty-five feet from the nearest important building or other construction and, in any event, not less than twenty-five feet from any building opening.

(f) Filling of portable containers, containers mounted on skids, fuel containers on farm tractors, or similar applications, from storage containers used in domestic or commercial service, shall be performed not less than fifty feet from the nearest important building.

(g) The filling connection and the vent from the liquid level gages in containers, filled at point of installation, shall not be less than ten feet in any direction from air openings into sealed combustion system appliances or mechanical ventilation air intakes.

(h) Fuel supply containers shall be gaged and charged only in the open air or in buildings especially provided for that purpose.

(i) The maximum vapor pressure of the product at 100°F which may be transferred into a container shall be in accordance with WAC 296-24-47509(2) and 296-24-47511(3). (For DOT containers use DOT requirements.)

(j) Marketers and users shall exercise precaution to assure that only those gases for which the system is designed, examined, and listed, are employed in its operation, particularly with regard to pressures.

(k) Pumps or compressors shall be designed for use with LP-gas. When compressors are used they shall normally take suction from the vapor space of the container being filled and discharge to the vapor space of the container being emptied.

(l) Pumping systems, when equipped with a positive displacement pump, shall include a recirculating device which shall limit the differential pressure on the pump under normal operating conditions to the maximum differential pressure rating of the pump. The discharge of the pumping system shall be protected so that pressure does not exceed 350 p.s.i.g. If a recirculation system discharges into the supply tank and contains a manual shutoff valve, an adequate secondary safety recirculation system shall be incorporated which shall have no means of rendering it inoperative. Manual shutoff valves in recirculation systems shall be kept open except during an emergency or when repairs are being made to the system.

(m) When necessary, unloading piping or hoses shall be provided with suitable bleeder valves for relieving pressure before disconnection.

(n) Agricultural air moving equipment, including crop dryers, shall be shut down when supply containers are being filled unless the air intakes and sources of ignition on the equipment are located fifty feet or more from the container.

(o) Agricultural equipment employing open flames or equipment with integral containers, such as flame cultivators, weed burners, and, in addition, tractors, shall be shut down during refueling.

(15) Tank car or transport truck loading or unloading points and operations.

(a) The track of tank car siding shall be relatively level.

(b) A "tank car connected" sign, as covered by DOT rules, shall be installed at the active end or ends of the siding while the tank car is connected.

(c) While cars are on side track for loading or unloading, the wheels at both ends shall be blocked on the rails.

(d) The employer shall insure that an employee is in attendance at all times while the tank car, cars, or trucks are being loaded or unloaded.

(e) A backflow check valve, excess-flow valve, or a shutoff valve with means of remote closing, to protect against uncontrolled discharge of LP-gas from storage tank piping shall be installed close to the point where the liquid piping and hose or swing joint pipe is connected.

(f) Where practical, the distance of the unloading or loading point shall conform to the distances in subsection (6)(b) of this section.

(16) Instructions. Personnel performing installation, removal, operation, and maintenance work shall be properly trained in such function.

(17) Electrical equipment and other sources of ignition.

(a) Electrical equipment and wiring shall be of a type specified by and shall be installed according to chapter 296-24 WAC Part L, for ordinary locations except that fixed electrical equipment in classified areas shall comply with subsection (18) of this section.

(b) Open flames or other sources of ignition shall not be permitted in vaporizer rooms (except those housing direct-fired vaporizers), pumphouses, container charging rooms or other similar locations. Direct-fired vaporizers shall not be permitted in pumphouses or container charging rooms.

Note: Liquefied petroleum gas storage containers do not require lightning protection. Since liquefied petroleum gas is contained in a closed system of piping and equipment, the system need not be electrically conductive or electrically bonded for protection against static electricity (see NFPA No. 77-1972-1973, Recommended Practice for Static Electricity).

(c) Open flames (except as provided for in (b) of this subsection), cutting or welding, portable electric tools, and extension lights capable of igniting LP-gas, shall not be permitted within classified areas specified in Table H-28 of this

section unless the LP-gas facilities have been freed of all liquid and vapor, or special precautions observed under carefully controlled conditions.

(18) Fixed electrical equipment in classified areas. Fixed electrical equipment and wiring installed within classified areas shall comply with Table H-28 of this section and shall be installed according to chapter 296-24 WAC Part L. This provision does not apply to fixed electrical equipment at residential or commercial installations of LP-gas systems or to systems covered by WAC 296-24-47511.

(19) Liquid-level gaging device.

(a) Each container manufactured after December 31, 1965, and filled on a volumetric basis shall be equipped with a fixed liquid-level gage to indicate the maximum permitted filling level as provided in (e) of this subsection. Each container manufactured after December 31, 1969, shall have permanently attached to the container adjacent to the fixed level gage a marking showing the percentage full that will be shown by that gage. When a variable liquid-level gage is also provided, the fixed liquid-level gage will also serve as a means for checking the variable gage. These gages shall be used in charging containers as required in subsection (12) of this section.

(b) All variable gaging devices shall be arranged so that the maximum liquid level for butane, for a fifty-fifty mixture of butane and propane, and for propane, to which the container may be charged is readily determinable. The markings indicating the various liquid levels from empty to full shall be on the system nameplate or gaging device or part may be on the system nameplate and part on the gaging device. Dials of magnetic or rotary gages shall show whether they are for cylindrical or spherical containers and whether for aboveground or underground service. The dials of gages intended for use only on aboveground containers of over one thousand two hundred gallons water capacity shall be so marked.

(c) Gaging devices that require bleeding of the product to the atmosphere, such as the rotary tube, fixed tube, and slip tube, shall be designed so that the bleed valve maximum opening is not larger than a No. 54 drill size, unless provided with excess flow valve.

(d) Gaging devices shall have a design working pressure of at least 250 p.s.i.g.

(e) Length of tube or position of fixed liquid-level gage shall be designed to indicate the maximum level to which the container may be filled for the product contained. This level shall be based on the volume of the product at 40°F at its maximum permitted filling density for aboveground containers and at 50°F for underground containers. The employer shall calculate the filling point for which the fixed liquid level gage shall be designed according to the method in this subsection.

TABLE H-28

Part	Location	Extent of classified area[1]	Equipment shall be suitable for Class I, Group D[2]
A	Storage containers other than DOT cylinders.	Within 15 feet in all directions from connections, except connections otherwise covered in Table H-28.	Division 2.
B	Tank vehicle and tank car loading and unloading.[3]	Within 5 feet in all directions from connections regularly made or disconnected for product transfer.	Division 1.
		Beyond 5 feet but within 15 feet in all directions from a point where connections are regularly made or disconnected and within the cylindrical volume between the horizontal equator of the sphere and grade. (See Figure H-1.)	Division 2.
C	Gage vent openings other than those on DOT cylinders.	Within 5 feet in all directions from point of discharge.	Division 1.
		Beyond 5 feet but within 15 feet in all directions from point of discharge.	Division 2.
D	Relief valve discharge other than those on DOT cylinders.	Within direct path of discharge.	Division 1. NOTE—Fixed electrical equipment should preferably not be installed.
		Within 5 feet in all directions from point of discharge.	Division 1.
		Beyond 5 feet but within 15 feet in all directions from point of discharge except within the direct path of discharge.	Division 2.
E	Pumps, compressors, gas-air mixers and vaporizers other than direct fired.		
	Indoors without ventilation	Entire room and any adjacent room not separated by a gas-tight partition.	Division 1.
		Within 15 feet of the exterior side of any exterior wall or roof that is not vaportight or within 15 feet of any exterior opening.	Division 2.
	Indoors with adequate ventilation.[4]	Entire room and any adjacent room not separated by a gas-tight partition.	Division 2.
	Outdoors in open air at or aboveground.	Within 15 feet in all directions from this equipment and within the cylindrical volume between the horizontal equator of the sphere and grade. See Figure H-1.	Division 2.

Part	Location	Extent of classified area[1]	Equipment shall be suitable for Class I, Group D[2]
F	Service station dispensing units.	Entire space within dispenser enclosure, and 18 inches horizontally from enclosure exterior up to an elevation 4 ft. above dispenser base.	Division 1.
		Entire pit or open space beneath dispenser.	
		Up to 18 inches abovegrade within 20 ft. horizontally from any edge of enclosure. NOTE: For pits within this area, see Part F of this table.	Division 2.
G	Pits or trenches containing or located beneath LP-gas valves, pumps, compressors, regulators, and similar equipment.		
	Without mechanical ventilation.	Entire pit or trench	Division 1.
		Entire room and any adjacent room not separated by a gas-tight partition.	Division 2.
		Within 15 feet in all directions from pit or trench when located outdoors.	Division 2.
	With adequate mechanical ventilation.	Entire pit or trench	Division 2
		Entire room and any adjacent room not separated by a gas-tight partition.	Division 2.
		Within 15 feet in all directions from pit or trench when located outdoors.	Division 2.
H	Special buildings or rooms for storage of portable containers.	Entire room	Division 2.
I	Pipelines and connections containing operational bleeds, drips, vents or drains.	Within 5 ft. in all directions from point of discharge.	Division 1.
		Beyond 5 ft. from point of discharge, same as Part E of this table.	
J	Container filling: Indoors without ventilation.	Entire room	Division 1.
	Indoors with adequate ventilation.[4]	Within 5 feet in all directions from connections regularly made or disconnected for product transfer.	Division 1.
		Beyond 5 feet and entire room	Division 2.
	Outdoors in open air	Within 5 feet in all directions from connections regularly made or disconnected for product transfer.	Division 1.
		Beyond 5 feet but within 15 feet in all directions from a point where connections are regularly made or disconnected and within the cylindrical volume between the horizontal equator of the sphere and grade (See Fig. H-1.)	Division 2.

[1]The classified area shall not extend beyond an unpierced wall, roof, or solid vaportight partition.

[2]See chapter 296-46 WAC, and chapter 296-24 WAC Part L.

[3]When classifying extent of hazardous area, consideration shall be given to possible variations in the spotting of tank cars and tank vehicles at the unloading points and the effect these variations of actual spotting point may have on the point of connection.

[4]Ventilation, either natural or mechanical, is considered adequate when the concentration of the gas in a gas-air mixture does not exceed twenty-five percent of the lower flammable limit under normal operating conditions.

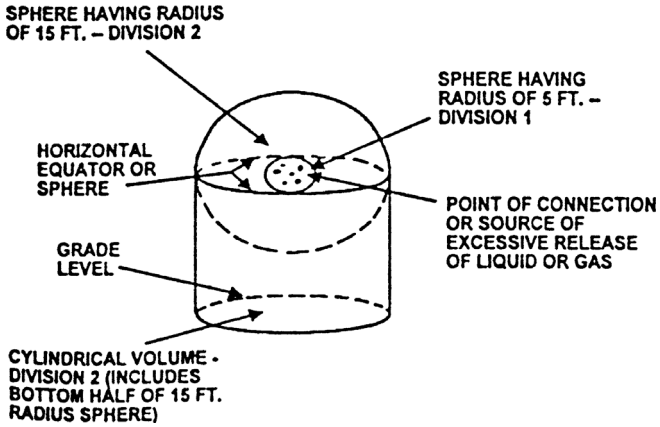

Figure H-1

Note: It is impossible to set out in a table the length of a fixed dip tube for various capacity tanks because of the varying tank diameters and lengths and because the tank may be installed either in a vertical or horizontal position. Knowing the maximum permitted filling volume in gallons, however, the length of the fixed tube can be determined by the use of a strapping table obtained from the container manufacturer. The length of the fixed tube should be such that when its lower end touches the surface of the liquid in the container, the contents of the container will be the maximum permitted volume as determined by the following formula:

$$\frac{\text{Water capacity (gals.) of container* x filling density**}}{\text{Specific gravity of LP-gas* x volume correction factor*** x 100}} = \text{Maximum volume of LP-gas}$$

* Measure at 60°F.

** From subsection (12)(a) of this section "filling densities."

*** For aboveground containers the liquid temperature is assumed to be 40°F and for underground containers the liquid temperature is assumed to be 50°F. To correct the liquid volumes at these temperatures to 60°F the following factors shall be used.

(i) Formula for determining maximum volume of liquefied petroleum gas for which a fixed length of dip tube shall be set:

TABLE H-29
VOLUME CORRECTION FACTORS

Specific gravity	Aboveground	Underground
0.500	1.033	1.017
.510	1.031	1.016
.520	1.029	1.015
.530	1.028	1.014
.540	1.026	1.013
.550	1.025	1.013
.560	1.024	1.012
.570	1.023	1.011
.580	1.021	1.011
.590	1.020	1.010

(ii) The maximum volume of LP-gas which can be placed in a container when determining the length of the dip tube expressed as a percentage of total water content of the container is calculated by the following formula.

(iii) The maximum weight of LP-gas which may be placed in a container for determining the length of a fixed dip tube is determined by multiplying the maximum volume of liquefied petroleum gas obtained by the formula in (e)(i) of this subsection by the pounds of liquefied petroleum gas in a gallon at 40°F for aboveground and at 50°F for underground containers. For example, typical pounds per gallon are specified below:

Example: Assume a one hundred-gallon total water capacity tank for aboveground storage of propane having a specific gravity of 0.510 of 60°F.

$$\frac{\text{100 (gals.) x 42 (filling density from (12)(a) of this subsection)}}{\text{0.510 x 1.031 (correction factor from Table H-29) x 100}} = \frac{4200}{52.6}$$

$$\frac{4200}{52.6} = \text{79.8 gallons propane, the maximum amount permitted to be placed in a 100-gallon total water capacity aboveground container equipped with a fixed dip tube.}$$

$$\frac{\text{Maximum volume of LP-gas (from formula in (e)(i) of this subsection) x 100}}{\text{Total water content of container in gallons.}} = \text{Maximum percent of LP-gas}$$

	Aboveground, pounds per gallon	Underground, pounds per gallon
Propane	4.37	4.31
N Butane	4.97	4.92

(f) Fixed liquid-level gages used on containers other than DOT containers shall be stamped on the exterior of the gage with the letters "DT" followed by the vertical distance (expressed in inches and carried out to one decimal place) from the top of container to the end of the dip tube or to the centerline of the gage when it is located at the maximum permitted filling level. For portable containers that may be filled in the horizontal and/or vertical position the letters "DT" shall be followed by "V" with the vertical distance from the top of the container to the end of the dip tube for vertical filling and with "H" followed by the proper distance for horizontal filling. For DOT containers the stamping shall be placed both on the exterior of the gage and on the container. On aboveground or cargo containers where the gages are positioned at specific levels, the marking may be specified in percent of total tank contents and the marking shall be stamped on the container.

(g) Gage glasses of the columnar type shall be restricted to charging plants where the fuel is withdrawn in the liquid phase only. They shall be equipped with valves having metallic handwheels, with excess flow valves, and with extra-heavy glass adequately protected with a metal housing applied by the gage manufacturer. They shall be shielded against the direct rays of the sun. Gage glasses of the columnar type are prohibited on tank trucks, and on motor fuel tanks, and on containers used in domestic, commercial, and industrial installations.

(h) Gaging devices of the float, or equivalent type which do not require flow for their operation and having connections extending to a point outside the container do not have to be equipped with excess flow valves provided the piping and fittings are adequately designed to withstand the container pressure and are properly protected against physical damage and breakage.

(20) Requirements for appliances.

(a) Except as provided in (b) of this subsection, new commercial and industrial gas consuming appliances shall be approved.

(b) Any appliance that was originally manufactured for operation with a gaseous fuel other than LP-gas and is in good condition may be used with LP-gas only after it is properly converted, adapted, and tested for performance with LP-gas before the appliance is placed in use.

(c) Unattended heaters used inside buildings for the purpose of animal or poultry production or care shall be equipped with an approved automatic device designed to shut off the flow of gas to the main burners, and pilot if used, in the event of flame extinguishment.

(d) All commercial, industrial, and agricultural appliances or equipment shall be installed in accordance with the requirements of these standards and in accordance with the following:

(i) Domestic and commercial appliances—NFPA 54-1969, Standard for the Installation of Gas Appliances and Gas Piping.

(ii) Industrial appliances—NFPA 54A-1969, Standard for the Installation of Gas Piping and Gas Equipment on Industrial Premises and Certain Other Premises.

(iii) Standard for the Installation and Use of Stationary Combustion Engines and Gas Turbines—NFPA 37-1970.

(iv) Standard for the Installation of Equipment for the Removal of Smoke and Grease-Laden Vapors from Commercial Cooking Equipment, NFPA 96-1970.

[Statutory Authority: RCW 49.17.010, [49.17].040 and [49.17].050. 99-17-094, § 296-24-47505, filed 8/17/99, effective 12/1/99. Statutory Authority: Chapter 49.17 RCW. 91-24-017 (Order 91-07), § 296-24-47505, filed 11/22/91, effective 12/24/91; 88-23-054 (Order 88-25), § 296-24-47505, filed 11/14/88. Statutory Authority: RCW 49.17.040 and 49.17.050. 85-10-004 (Order 85-09), § 296-24-47505, filed 4/19/85; Order 76-6, § 296-24-47505, filed 3/1/76; Order 73-5, § 296-24-47505, filed 5/9/73 and Order 73-4, § 296-24-47505, filed 5/7/73.]

WAC 296-24-47507 Cylinder systems. (1) Application. This section applies specifically to systems utilizing containers constructed in accordance with DOT specifications. All requirements of WAC 296-24-47505 apply to this section unless otherwise noted in WAC 296-24-47505.

(2) Marking of containers. Containers shall be marked in accordance with DOT regulations. Additional markings not in conflict with DOT regulations may be used.

(3) Description of a system. A system shall include the container base or bracket, containers, container valves, connectors, manifold valve assembly, regulators, and relief valves.

(4) Containers and regulating equipment installed outside of buildings or structures.

(a) Containers shall not be buried below ground. However, this shall not prohibit the installation in a compartment or recess below grade level, such as a niche in a slope or terrace wall which is used for no other purpose, providing that the container and regulating equipment are not in contact with the ground and the compartment or recess is drained and ventilated horizontally to the outside air from its lowest level, with the outlet at least three feet away from any building opening which is below the level of such outlet.

Except as provided in WAC 296-24-47505 (10)(n), the discharge from safety relief devices shall be located not less than three feet horizontally away from any building opening which is below the level of such discharge and shall not terminate beneath any building unless such space is well ventilated to the outside and is not enclosed on more than two sides.

(b) Containers shall be set upon firm foundation or otherwise firmly secured; the possible effect on the outlet piping of settling shall be guarded against by a flexible connection or special fitting.

(5) Containers and equipment used inside of buildings or structures.

(a) When operational requirements make portable use of containers necessary and their location outside of buildings or structures is impracticable, containers and equipment are permitted to be used inside of buildings or structures in accordance with (a)(i) through (xii) of this subsection, and, in addition, such other provisions of this section as are applicable to the particular use or occupancy.

(i) Containers in use shall mean connected for use.

(ii) Systems utilizing containers having a water capacity greater than two and one-half pounds (nominal one pound LP-gas capacity) shall be equipped with excess flow valves. Such excess flow valves shall be either integral with the container valves or in the connections to the container valve outlets. In either case, an excess flow valve shall be installed in such a manner that any undue strain beyond the excess flow valve will not cause breakage between the container and the excess flow valve. The installation of excess flow valves shall take into account the type of valve protection provided.

(iii) Regulators, if used, shall be either directly connected to the container valves or to manifolds connected to the container valves. The regulator shall be suitable for use with LP-gas. Manifolds and fittings connecting containers to pressure regulator inlets shall be designed for at least 250 p.s.i.g. service pressure.

(iv) Valves on containers having a water capacity greater than fifty pounds (nominal twenty pounds LP-gas capacity) shall be protected while in use.

(v) Containers shall be marked in accordance with WAC 296-24-47505 (5)(c) and subsection (2) of this section.

(vi) Pipe or tubing shall conform to WAC 296-24-47505(8) except that aluminum pipe or tubing shall not be used.

(vii) Hose shall be designed for a working pressure of at least 250 p.s.i.g. Hose and hose connections shall have their correctness as to design, construction and performance determined by listing by a nationally recognized testing laboratory.

(A) The hose length may exceed the length specified in WAC 296-24-47505 (9)(g)(ii), but shall be as short as practicable. Refer to federal regulation 29 CFR 1910.7 for definition of nationally recognized testing laboratory.

(B) Hose shall be long enough to permit compliance with spacing provisions of this section without kinking or straining or causing hose to be so close to a burner as to be damaged by heat.

(viii) Portable heaters, including salamanders, shall be equipped with an approved automatic device to shut off the flow of gas to the main burner, and pilot if used, in the event of flame extinguishment. Such heaters having inputs above 50,000 B.t.u. manufactured on or after May 17, 1967, and such heaters having inputs above 100,000 B.t.u. manufactured before May 17, 1967, shall be equipped with either:

(A) A pilot which must be lighted and proved before the main burner can be turned on; or

(B) An electric ignition system. The provisions of (a)(viii) of this subsection do not apply to tar kettle burners, torches, melting pots, nor do they apply to portable heaters under 7,500 B.t.u.h. input when used with containers having a maximum water capacity of two and one-half pounds. Container valves, connectors, regulators, manifolds, piping, and tubing shall not be used as structural supports for heaters.

(ix) Containers, regulating equipment, manifolds, pipe, tubing, and hose shall be located so as to minimize exposure to abnormally high temperatures (such as may result from exposure to convection or radiation from heating equipment or installation in confined spaces), physical damage, or tampering by unauthorized persons.

(x) Heat producing equipment shall be located and used so as to minimize the possibility of ignition of combustibles.

(xi) Containers having water capacity greater than two and one-half pounds (nominal one pound LP-gas capacity) connected for use, shall stand on a firm and substantially level surface and, when necessary, shall be secured in an upright position.

(xii) Containers, including the valve protective devices, shall be installed so as to minimize the probability of impingement of discharge of safety relief devices upon containers.

(b) Containers having a maximum water capacity of two and one-half pounds (nominal one pound LP-gas capacity) are permitted to be used inside of buildings as part of approved self-contained hand torch assemblies or similar appliances.

(c) Containers having a maximum water capacity of twelve pounds (nominal five pounds LP-gas capacity) are permitted to be used temporarily inside of buildings for public exhibition or demonstration purposes, including use for classroom demonstrations.

(d) When buildings frequented by the public are open to the public, containers are permitted to be used for repair or minor renovation as follows:

(i) The maximum water capacity of individual containers shall be fifty pounds (nominal twenty pounds LP-gas capacity).

(ii) The number of LP-gas containers shall not exceed the number of workers assigned to using the LP-gas.

(iii) Containers having a water capacity of greater than two and one-half pounds (nominal one pound LP-gas capacity[)] shall not be left unattended in such buildings.

(e) When buildings frequented by the public are not open to the public, containers are permitted to be used for repair or minor renovations, as follows:

The provisions of (f) of this subsection shall apply except that containers having a water capacity greater than two and one-half pounds (nominal one pound LP-gas capacity) shall not be left unattended in such buildings.

(f) Containers are permitted to be used in buildings or structures under construction or undergoing major renovation when such buildings or structures are not occupied by the public, as follows:

(i) The maximum water capacity of individual containers shall be two hundred forty-five pounds (nominal one hundred pounds LP-gas capacity).

(ii) For temporary heating such as curing concrete, drying plaster and similar applications, heaters (other than integral heater-container units) shall be located at least six feet from any LP-gas container. This shall not prohibit the use of heaters specifically designed for attachment to the container or to a supporting standard, provided they are designed and installed so as to prevent direct or radiant heat application from the heater onto the container. Blower and radiant type heater shall not be directed toward any LP-gas container within twenty feet.

(iii) If two or more heater-container units, of either the integral or nonintegral type, are located in an unpartitioned area on the same floor, the container or containers of each unit shall be separated from the container or containers of any other unit by at least twenty feet.

(iv) When heaters are connected to containers for use in an unpartitioned area on the same floor, the total water capacity of containers manifolded together for connection to a heater or heaters shall not be greater than seven hundred thirty-five pounds (nominal three hundred pounds LP-gas capacity). Such manifolds shall be separated by at least twenty feet.

(v) On floors on which heaters are not connected for use, containers are permitted to be manifolded together for connection to a heater or heaters on another floor, provided:

(A) The total water capacity of containers connected to any one manifold is not greater than two thousand four hundred fifty pounds (nominal one thousand pounds LP-gas capacity) and;

(B) Where more than one manifold having a total water capacity greater than seven hundred thirty-five pounds (nominal three hundred pounds LP-gas capacity) are located in the same unpartitioned area, they shall be separated by at least fifty feet.

(vi) Storage of containers awaiting use shall be in accordance with WAC 296-24-47513.

(g) Containers are permitted to be used in industrial occupancies for processing, research, or experimental purposes as follows:

(i) The maximum water capacity of individual containers shall be two hundred forty-five pounds (nominal one hundred pounds LP-gas capacity).

(ii) Containers connected to a manifold shall have a total water capacity not greater than seven hundred thirty-five pounds (nominal three hundred pounds LP-gas capacity) and not more than one such manifold may be located in the same room unless separated at least twenty feet from a similar unit.

(iii) The amount of LP-gas in containers for research and experimental use shall be limited to the smallest practical quantity.

(h) Containers are permitted to be used in industrial occupancies with essentially noncombustible contents where portable equipment for space heating is essential and where a permanent heating installation is not practical, as follows: Containers and heaters shall comply with and be used in accordance with (f) of this subsection.

(i) Containers are permitted to be used in buildings for temporary emergency heating purposes, if necessary to prevent damage to the buildings or contents, when the permanent heating system is temporarily out of service, as follows:

(i) Containers and heaters shall comply with and be used in accordance with (f) of this subsection.

(ii) The temporary heating equipment shall not be left unattended.

(j) Containers are permitted to be used temporarily in buildings for training purposes related in installation and use of LP-gas systems, as follows:

(i) The maximum water capacity of individual containers shall be two hundred forty-five pounds (nominal one hundred pounds LP-gas capacity), but the maximum quantity of LP-gas that may be placed in each container shall be twenty pounds.

(ii) If more than one such container is located in the same room, the containers shall be separated by at least twenty feet.

(iii) Containers shall be removed from the building when the training class has terminated.

(6) Container valves and accessories.

(a) Valves in the assembly of multiple container systems shall be arranged so that replacement of containers can be made without shutting off the flow of gas in the system.

Note: This provision is not to be construed as requiring an automatic changeover device.

(b) Regulators and low-pressure relief devices shall be rigidly attached to the cylinder valves, cylinders, supporting standards, the building walls or otherwise rigidly secured and shall be so installed or protected that the elements (sleet, snow, or ice) will not affect their operation.

(c) Valves and connections to the containers shall be protected while in transit, in storage, and while being moved into final utilization, as follows:

(i) By setting into the recess of the container to prevent the possibility of their being struck if the container is dropped upon a flat surface, or

(ii) By ventilated cap or collar, fastened to the container capable of withstanding a blow from any direction equivalent to that of a thirty-pound weight dropped four feet. Construction must be such that a blow will not be transmitted to the valve or other connection.

(d) When containers are not connected to the system, the outlet valves shall be kept tightly closed or plugged, even though containers are considered empty.

(e) Containers having a water capacity in excess of fifty pounds (approximately twenty-one pounds LP-gas capacity), recharged at the installation, shall be provided with excess flow or backflow check valves to prevent the discharge of container contents in case of failure of the filling or equalizing connection.

(7) Safety devices.

(a) Containers shall be provided with safety devices as required by DOT regulations.

(b) A final stage regulator of an LP-gas system (excluding any appliance regulator) shall be equipped on the low-pressure side with a relief valve which is set to start to discharge within the limits specified in Table H-30.

TABLE H-30

Regulatory delivery pressure	Relief valve start to discharge pressure setting (percent of regulator deliver pressure)	
	Minimum	Maximum
1 p.s.i.g. or less	200	300
Above 1 p.s.i.g. but not over 3 p.s.i.g.	140	200
Above 3 p.s.i.g.	125	200

(c) When a regulator or pressure relief valve is used inside a building for other than purposes specified in WAC 296-24-47505 (6)(a)(i) through (vi), the relief valve and the space above the regulator and relief valve diaphragms shall be vented to the outside air with the discharge outlet located not less than three feet horizontally away from any building opening which is below such discharge. These provisions do not apply to individual appliance regulators when protection is otherwise provided nor to subsection (5) of this section and WAC 296-24-47505 (10)(n). In buildings devoted exclusively to gas distribution purposes, the space above the diaphragm need not be vented to the outside.

(8) Reinstallation of containers. Containers shall not be reinstalled unless they are requalified in accordance with DOT regulations.

Permissible product. A product shall not be placed in a container marked with a service pressure less than four-fifths of the maximum vapor pressure of product at 130°F.

[Statutory Authority: RCW 49.17.010, [49.17].040 and [49.17].050. 99-17-094, § 296-24-47507, filed 8/17/99, effective 12/1/99. Statutory Authority: Chapter 49.17 RCW. 94-15-096 (Order 94-07), § 296-24-47507, filed 7/20/94, effective 9/20/94; 88-23-054 (Order 88-25), § 296-24-47507, filed 11/14/88; Order 73-5, § 296-24-47507, filed 5/9/73 and Order 73-4, § 296-24-47507, filed 5/7/73.]

WAC 296-24-47509 Systems utilizing containers other than DOT containers. (1) Application. This section applies specifically to systems utilizing storage containers other than those constructed in accordance with DOT specifications. WAC 296-24-47505 of this section applies to this section unless otherwise noted in WAC 296-24-47505.

(2) Design pressure and classification of storage containers. Storage containers shall be designed and classified in accordance with Table H-31.

(3) Container valves and accessories, filler pipes, and discharge pipes.

(a) The filling pipe inlet terminal shall not be located inside a building. For containers with a water capacity of 125 gallons or more, such terminals shall be located not less than 10 feet from any building (see WAC 296-24-47505 (6)(b)), and preferably not less than 5 feet from any driveway, and shall be located in a protective housing built for the purpose.

TABLE H-31

Container type	For gases with vapor press. Not to exceed lb. per sq. in. gage at 100°F (37.8°C.)	Minimum design pressures of container lb. per sq. in. gage	
		1949 and earlier editions of ASME Code (Par. U-68 U-69)	1949 edition of Code (Par. U-200, U-201); 1950, 1952, 1956, 1959, 1962, 1965, and 1968 (Division I) editions of ASME Code; All editions of API-ASME Code[3]
80[1]	80[1]	80[1]	100[1]
100	100	100	125
125	125	125	156
150	150	150	187
175	175	175	219
200[2]	215	200	250

[1]New storage containers of the 80 type have not been authorized since Dec. 31, 1947.

[2]Container type may be increased by increments of 25. The minimum design pressure of containers shall be 100% of the container type designations when constructed under 1949 or earlier editions of the ASME Code (Par. U-68 and U-69). The minimum design pressure of containers shall be 125% of the container type designation when constructed under: (1) The 1949 ASME Code (Par. U-200 and U-201), (2) 1950, 1952, 1956, 1959, 1962, 1965, and 1968 (Division I) editions of the ASME Code, and (3) all editions of the API-ASME Code.

[3]Construction of containers under the API-ASME Code is not authorized after July 1, 1961.

(b) The filling connection shall be fitted with one of the following:

(i) Combination back-pressure check valve and excess flow valve.

(ii) One double or two single back-pressure check valves.

(iii) A positive shut-off valve in conjunction with either:

(A) An internal back pressure valve, or

(B) An internal excess flow valve.

(c) All openings in a container shall be equipped with approved automatic excess flow valves except in the following: Filling connections as provided in (3)(b) of this section;

safety relief connections, liquid-level gaging devices as provided in WAC 296-24-47505 (7)(d), (19)(c) and (19)(h); pressure gage connections as provided in WAC 296-24-47505 (7)(e), as provided in (3)(d), (f) and (g) of this section.

(d) An excess flow valve is not required in the withdrawal service line providing the following are complied with:

(i) Such systems' total water capacity does not exceed 2,000 U.S. gallons.

(ii) The discharge from the service outlet is controlled by a suitable manually operated shut-off valve which is:

(A) Threaded directly into the service outlet of the container; or

(B) Is an integral part of a substantial fitting threaded into or on the service outlet of the container; or

(C) Threaded directly into a substantial fitting threaded into or on the service outlet of the container.

(iii) The shut-off valve is equipped with an attached handwheel or the equivalent.

(iv) The controlling orifice between the contents of the container and the outlet of the shut-off valve does not exceed five-sixteenths inch in diameter for vapor withdrawal systems and one-eighth inch in diameter for liquid withdrawal systems.

(v) An approved pressure-reducing regulator is directly attached to the outlet of the shut-off valve and is rigidly supported, or that an approved pressure-reducing regulator is attached to the outlet of the shut-off valve by means of a suitable flexible connection, provided the regulator is adequately supported and properly protected on or at the tank.

(e) All inlet and outlet connections except safety relief valves, liquid level gaging devices and pressure gages on containers of 2,000 gallons water capacity, or more, and on any container used to supply fuel directly to an internal combustion engine, shall be labeled to designate whether they communicate with vapor or liquid space. Labels may be on valves.

(f) In lieu of an excess flow valve openings may be fitted with a quick-closing internal valve which, except during operating periods shall remain closed. The internal mechanism for such valves may be provided with a secondary control which shall be equipped with a fusible plug (not over 220°F melting point) which will cause the internal valve to close automatically in case of fire.

(g) Not more than two plugged openings shall be permitted on a container of 2,000 gallons or less water capacity.

(h) Containers of 125 gallons water capacity or more manufactured after July 1, 1961, shall be provided with an approved device for liquid evacuation, the size of which shall be three-fourths inch national pipe thread minimum. A plugged opening will not satisfy this requirements.

(4) Safety devices.

(a) All safety devices shall comply with the following:

(i) All container safety relief devices shall be located on the containers and shall have direct communication with the vapor space of the container.

(ii) In industrial and gas manufacturing plants, discharge pipe from safety relief valves on pipe lines within a building shall discharge vertically upward and shall be piped to a point outside a building.

(iii) Safety relief device discharge terminals shall be so located as to provide protection against physical damage and such discharge pipes shall be fitted with loose raincaps. Return bends and restrictive pipefittings shall not be permitted.

(iv) If desired, discharge lines from two or more safety relief devices located on the same unit, or similar lines from two or more different units, may be run into a common discharge header, provided that the cross-sectional area of such header be at least equal to the sum of the cross-sectional area of the individual discharge lines, and that the setting of safety relief valves are the same.

(v) Each storage container of over 2,000 gallons water capacity shall be provided with a suitable pressure gage.

(vi) A final stage regulator of an LP-gas system (excluding any appliance regulator) shall be equipped on the low-pressure side with a relief valve which is set to start to discharge within the limits specified in Table H-30.

(vii) When a regulator or pressure relief valve is installed inside a building, the relief valve and the space above the regulator and relief valve diaphragms shall be vented to the outside air with the discharge outlet located not less than 3 feet horizontally away from any opening into the building which is below such discharge. (These provisions do not apply to individual appliance regulators when protection is otherwise provided. In buildings devoted exclusively to gas distribution purposes, the space above the diaphragm need not be vented to the outside.)

(b) Safety devices for aboveground containers shall be provided as follows:

(i) Containers of 1,200 gallons water capacity or less which may contain liquid fuel when installed above ground shall have the rate of discharge required by WAC 296-24-47505 (10)(b) provided by a spring-loaded relief valve or valves. In addition to the required spring-loaded relief valve(s) suitable fuse plug(s) may be used provided the total discharge area of the fuse plug(s) for each container does not exceed 0.25 square inch.

(ii) The fusible metal of the fuse plugs shall have a yield temperature of 208°F minimum and 220°F maximum. Relief valves and fuse plugs shall have direct communication with the vapor space of the container.

(iii) On a container having a water capacity greater than 125 gallons, but not over 2,000 gallons, the discharge from the safety relief valves shall be vented away from the container vertically upwards and unobstructed to the open air in such a manner as to prevent any impingement of escaping gas upon the container; loose-fitting rain caps shall be used. Suitable provision shall be made for draining condensate which may accumulate in the relief valve or its discharge pipe.

(iv) On containers of 125 gallons water capacity or less, the discharge from safety relief devices shall be located not less than 5 feet horizontally away from any opening into the building below the level of such discharge.

(v) On a container having a water capacity greater than 2,000 gallons, the discharge from the safety relief valves shall be vented away from the container vertically upwards to a point at least 7 feet above the container, and unobstructed to the open air in such a manner as to prevent any impingement of escaping gas upon the container; loose-fitting rain caps shall be used. Suitable provision shall be made so that any

liquid or condensate that may accumulate inside of the safety relief valve or its discharge pipe will not render the valve inoperative. If a drain is used, a means shall be provided to protect the container, adjacent containers, piping, or equipment against impingement of flame resulting from ignition of product escaping from the drain.

(c) On all containers which are installed underground and which contain no liquid fuel until buried and covered, the rate of discharge of the spring-loaded relief valve installed thereon may be reduced to a minimum of 30 percent of the rate of discharge specified in WAC 296-24-47505 (10)(b). Containers so protected shall not be uncovered after installation until the liquid fuel has been removed therefrom. Containers which may contain liquid fuel before being installed under ground and before being completely covered with earth are to be considered aboveground containers when determining the rate of discharge requirement of the relief valves.

(d) On underground containers of more than 2,000 gallons water capacity, the discharge from safety relief devices shall be piped vertically and directly upward to a point at least 7 feet above the ground.

Where there is a probability of the manhole or housing becoming flooded, the discharge from regulator vent lines shall be above the highest probable water level. All manholes or housings shall be provided with ventilated louvers or their equivalent, the area of such openings equaling or exceeding the combined discharge areas of the safety relief valves and other vent lines which discharge their content into the manhole housing.

(e) Safety devices for vaporizers shall be provided as follows:

(i) Vaporizers of less than 1 quart total capacity, heated by the ground or the surrounding air, need not be equipped with safety relief valves provided that adequate tests certified by any of the authorities referred to in WAC 296-24-47505 (2), demonstrate that the assembly is safe without safety relief valves.

(ii) No vaporizer shall be equipped with fusible plugs.

(iii) In industrial and gas manufacturing plants, safety relief valves on vaporizers within a building shall be piped to a point outside the building and be discharged upward.

(5) Reinstallation of containers. Containers may be reinstalled if they do not show any evidence of harmful external corrosion or other damage. Where containers are reinstalled underground, the corrosion resistant coating shall be put in good condition (see (7)(f) of this section). Where containers are reinstalled above ground, the safety devices and gaging devices shall comply with (4) of this section and WAC 296-24-47505(19) respectively for aboveground containers.

(6) Capacity of containers. A storage container shall not exceed 90,000 gallons water capacity.

(7) Installation of storage containers.

(a) Containers installed above ground, except as provided in (7)(g) of this section, shall be provided with substantial masonry or noncombustible structural supports on firm masonry foundation.

(b) Aboveground containers shall be supported as follows:

(i) Horizontal containers shall be mounted on saddles in such a manner as to permit expansion and contraction. Structural metal supports may be employed when they are protected against fire in an approved manner. Suitable means of preventing corrosion shall be provided on that portion of the container in contact with the foundations or saddles.

(ii) Containers of 2,000 gallons water capacity or less may be installed with nonfireproofed ferrous metal supports if mounted on concrete pads or footings, and if the distance from the outside bottom of the container shell to the concrete pad, footing, or the ground does not exceed 24 inches.

(c) Any container may be installed with nonfireproofed ferrous metal supports if mounted on concrete pads or footings, and if the distance from the outside bottom of the container to the ground does not exceed 5 feet, provided the container is in an isolated location.

(d) Containers may be partially buried providing the following requirements are met:

(i) The portion of the container below the surface and for a vertical distance not less than 3 inches above the surface of the ground is protected to resist corrosion, and the container is protected against settling and corrosion as required for fully buried containers.

(ii) Spacing requirements shall be as specified for underground tanks in WAC 296-24-47505 (6)(b).

(iii) Relief valve capacity shall be as required for aboveground containers.

(iv) Container is located so as not to be subject to vehicular damage, or is adequately protected against such damage.

(v) Filling densities shall be as required for aboveground containers as specified in Table H-27. See WAC 296-24-47505.

(e) Containers buried underground shall be placed so that the top of the container is not less than 6 inches below grade. Where an underground container might be subject to abrasive action or physical damage due to vehicular traffic or other causes, then it shall be:

(i) Placed not less than 2 feet below grade, or

(ii) Otherwise protected against such physical damage.

It will not be necessary to cover the portion of the container to which manhole and other connections are affixed; however, where necessary, protection shall be provided against vehicular damage. When necessary to prevent floating, containers shall be securely anchored or weighted.

(f) Containers shall be given a protective coating before being placed underground. This coating shall be equivalent to hot-dip galvanizing or to two coatings of red lead followed by a heavy coating of coal tar or asphalt. In lowering the container into place, care shall be exercised to prevent damage to the coating. Any damage to the coating shall be repaired before backfilling.

(i) Containers shall be set on a firm foundation (firm earth may be used) and surrounded with earth or sand firmly tamped in place. Backfill should be free of rocks or other abrasive materials.

(g) Containers with foundations attached (portable or semiportable containers with suitable steel "runners" or "skids" and popularly known in the industry as "skid tanks") shall be designed, installed, and used in accordance with these rules subject to the following provisions:

(i) If they are to be used at a given general location for a temporary period not to exceed 6 months they need not have fire-resisting foundations or saddles but shall have adequate ferrous metal supports.

(ii) They shall not be located with the outside bottom of the container shell more than 5 feet above the surface of the ground unless fire-resisting supports are provided.

(iii) The bottom of the skids shall not be less than 2 inches or more than 12 inches below the outside bottom of the container shell.

(iv) Flanges, nozzles, valves, fittings, and the like, having communication with the interior of the container, shall be protected against physical damage.

(v) When not permanently located on fire-resisting foundations, piping connections shall be sufficiently flexible to minimize the possibility of breakage or leakage of connections if the container settles, moves, or is otherwise displaced.

(vi) Skids, or lugs for attachment of skids, shall be secured to the container in accordance with the code or rules under which the container is designed and built (with a minimum factor of safety of four) to withstand loading in any direction equal to four times the weight of the container and attachments when filled to the maximum permissible loaded weight.

(h) Field welding where necessary shall be made only on saddle plates or brackets which were applied by the manufacturer of the tank.

(i) For aboveground containers, secure anchorage or adequate pier height shall be provided against possible container flotation wherever sufficiently high floodwater might occur.

(j) When permanently installed containers are interconnected, provision shall be made to compensate for expansion, contraction, vibration, and settling of containers, and interconnecting piping. Where flexible connections are used, they shall be of an approved type and shall be designed for a bursting pressure of not less than five times the vapor pressure of the product at 100°F. The use of nonmetallic hose is prohibited for permanently interconnecting such containers.

(k) Container assemblies listed for interchangeable installation above ground or under ground shall conform to the requirements for aboveground installations with respect to safety relief capacity and filling density. For installation above ground all other requirements for aboveground installations shall apply. For installation under ground all other requirements for underground installations shall apply.

(8) Protection of container accessories.

(a) Valves, regulating, gaging, and other container accessory equipment shall be protected against tampering and physical damage. Such accessories shall also be so protected during the transit of containers intended for installation underground.

(b) On underground or combination aboveground-underground containers, the service valve handwheel, the terminal for connecting the hose, and the opening through which there can be a flow from safety relief valves shall be at least 4 inches above the container and this opening shall be located in the dome or housing. Underground systems shall be so installed that all the above openings, including the regulator vent, are located above the normal maximum water table.

(c) All connections to the underground containers shall be located within a substantial dome, housing, or manhole and with access thereto protected by a substantial cover.

(9) Drips for condensed gas. Where vaporized gas on the low-pressure side of the system may condense to a liquid at normal operating temperatures and pressures, suitable means shall be provided for revaporization of the condensate.

(10) Damage from vehicles. When damage to LP-gas systems from vehicular traffic is a possibility, precautions against such damage shall be taken.

(11) Pits and drains. Every effort should be made to avoid the use of pits, except pits fitted with automatic flammable vapor detecting devices. No drains or blowoff lines shall be directed into or in proximity to sewer systems used for other purposes.

(12) General provisions applicable to systems in industrial plants (of 2,000 gallons water capacity and more) and to bulk filling plants.

(a) When standard watch service is provided, it shall be extended to the LP-gas installation and personnel properly trained.

(b) If loading and unloading are normally done during other than daylight hours, adequate lights shall be provided to illuminate storage containers, control valves, and other equipment.

(c) Suitable roadways or means of access for extinguishing equipment such as wheeled extinguishers or fire department apparatus shall be provided.

(d) To minimize trespassing or tampering, the area which includes container appurtenances, pumping equipment, loading and unloading facilities, and cylinder-filling facilities shall be enclosed with at least a 6-foot-high industrial type fence unless otherwise adequately protected. There shall be at least two means of emergency access.

(13) Container-charging plants.

(a) The container-charging room shall be located not less than:

(i) Ten feet from bulk storage containers.

(ii) Twenty-five feet from line of adjoining property which may be built upon.

(b) Tank truck filling station outlets shall be located not less than:

(i) Twenty-five feet from line of adjoining property which may be built upon.

(ii) Ten feet from pumps and compressors if housed in one or more separate buildings.

(c) The pumps or compressors may be located in the container-charging room or building, in a separate building, or outside of buildings. When housed in separate building, such building (a small noncombustible weather cover is not to be construed as a building) shall be located not less than:

(i) Ten feet from bulk storage tanks.

(ii) Twenty-five feet from line of adjoining property which may be built upon.

(iii) Twenty-five feet from sources of ignition.

(d) When a part of the container-charging building is to be used for a boiler room or where open flames or similar sources of ignition exist or are employed, the space to be so occupied shall be separated from container charging room by a partition wall or walls of fire-resistant construction continuous from floor to roof or ceiling. Such separation walls shall be without openings and shall be joined to the floor, other walls, and ceiling or roof in a manner to effect a permanent gas-tight joint.

(e) Electrical equipment and installations shall conform with WAC 296-24-47505 (17) and (18).

(14) Fire protection.

(a) Each bulk plant shall be provided with at least one approved portable fire extinguisher having a minimum rating of 12-B, C.

Note: For additional requirements relating to portable fire extinguishers see WAC 296-800-300.

(b) In industrial installations involving containers of 150,000 gallons aggregate water capacity or more, provision shall be made for an adequate supply of water at the container site for fire protection in the container area, unless other adequate means for fire control are provided. Water hydrants shall be readily accessible and so spaced as to provide water protection for all containers. Sufficient lengths of firehose shall be provided at each hydrant location on a hose cart, or other means provided to facilitate easy movement of the hose in the container area. It is desirable to equip the outlet of each hose line with a combination fog nozzle. A shelter shall be provided to protect the hose and its conveyor from the weather.

(15) Painting. Aboveground containers shall be kept properly painted.

(16) Lighting. Electrical equipment and installations shall conform to WAC 296-24-47505 (17) and (18).

(17) Vaporizers for internal combustion engines. The provisions of WAC 296-24-47511(8) shall apply.

(18) Gas regulating and mixing equipment for internal combustion engines. The provisions of WAC 296-24-47511(9) shall apply.

[Statutory Authority: RCW 49.17.010, [49.17].040, and [49.17].050. 01-17-033, § 296-24-47509, filed 8/8/01, effective 9/1/01; Order 73-5, § 296-24-47509, filed 5/9/73 and Order 73-4, § 296-24-47509, filed 5/7/73.]

WAC 296-24-47511 Liquefied petroleum gas as a motor fuel. (1) Application.

(a) This section applies to internal combustion engines, fuel containers, and pertinent equipment for the use of liquefied petroleum gases as a motor fuel on easily movable, readily portable units including self-propelled vehicles.

(b) Fuel containers and pertinent equipment for internal combustion engines using liquefied petroleum gas where installation is of the stationary type are covered by WAC 296-24-47509. This section does not apply to containers for transportation of liquefied petroleum gases nor to marine fuel use. All requirements of WAC 296-24-47505 apply to this section, unless otherwise noted in WAC 296-24-47505.

(2) General.

(a) Fuel may be used from the cargo tank of a truck while in transit, but not from cargo tanks on trailers or semitrailers. The use of fuel from the cargo tanks to operate stationary engines is permitted providing wheels are securely blocked.

(b) Passenger-carrying vehicles shall not be fueled while passengers are on board.

(c) Reserved.

(d) LP-gas fueled industrial trucks shall comply with the Standard for Type Designations, Areas of Use, Maintenance and Operation of Powered Industrial Trucks, NFPA 505-1969.

(e) Engines on vehicles shall be shut down while fueling if the fueling operation involves venting to the atmosphere.

(3) Design pressure and classification of fuel containers.

(a) Except as covered in (3)(b) and (c) of this section, containers shall be in accordance with Table H-32.

(b) Reserved.

TABLE H-32

Container type	For gases with vapor press. Not to exceed lb. per sq. in. gage at 100°F. (37.8°C.)	Minimum design pressure of container lb. per sq. in. gage	
		1949 and earlier editions of ASME Code (Par. U-68, U-69)	1949 edition of ASME Code (Par. U-200, 1U-201); 1950, 1952, 1956, 1959, 1962, 1965, and 1968 (Division I) editions of ASME Code; All editions of API-ASME Code[2]
200[1]	215	200	250

[1] Container type may be increased by increments of 25. The minimum design pressure of containers shall be 100% of the container type designation when constructed under 1949 or earlier editions of the ASME Code (Par. U-68 and U-69). The minimum design pressure of containers shall be 125% of the container type designation when constructed under: (1) The 1949 ASME Code (Par. U-200 and U-201), (2) 1950, 1952, 1956, 1959, 1962, 1965, and 1968 (Division I) editions of the ASME Code, and (3) all editions of the API-ASME Code.

[2] Construction of containers under the API-ASME Code is not authorized after July 1, 1961.

(c) Containers manufactured and maintained under DOT specifications and regulations may be used as fuel containers. When so used they shall conform to all requirements of this section.

(d) All container inlets and outlets except safety relief valves and gaging devices shall be labeled to designate whether they communicate with vapor or liquid space. (Labels may be on valves.)

(4) Installation of fuel containers.

(a) Containers shall be located in a place and in a manner to minimize the possibility of damage to the container. Containers located in the rear of trucks and buses, when protected by substantial bumpers, will be considered in conformance with this requirement. Fuel containers on passenger-carrying vehicles shall be installed as far from the engine as is practicable, and the passenger space and any space containing radio equipment shall be sealed from the container space to prevent direct seepage of gas to these spaces. The container compartment shall be vented to the outside. In case the fuel container is mounted near the engine or the exhaust system, the container shall be shielded against direct heat radiation.

(b) Containers shall be installed with as much clearance as practicable but never less than the minimum road clearance of the vehicle under maximum spring deflection. This minimum clearance shall be to the bottom of the container or to the lowest fitting on the container or housing, whichever is lower.

(c) Permanent and removable fuel containers shall be securely mounted to prevent jarring loose, slipping, or rotating, and the fastenings shall be designed and constructed to withstand static loading in any direction equal to twice the weight of the tank and attachments when filled with fuel using a safety factor of not less than four based on the ultimate strength of the material to be used. Field welding, when necessary, shall be made only on saddle plates, lugs or brackets, originally attached to the container by the tank manufacturer.

(d) Fuel containers on buses shall be permanently installed.

(e) Containers from which vapor only is to be withdrawn shall be installed and equipped with suitable connections to minimize the accidental withdrawal of liquid.

(5) Valves and accessories.

(a) Container valves and accessories shall have a rated working pressure of at least 250 p.s.i.g., and shall be of a type suitable for liquefied petroleum gas service.

(b) The filling connection shall be fitted with an approved double back-pressure check valve, or a positive shutoff in conjunction with an internal back-pressure check valve. On a removable container the filler valve may be a hand operated shutoff valve with an internal excess flow valve. Main shutoff valves on the container on liquid and vapor must be readily accessible.

(c) With the exceptions of (5)(d)(iii) of this section, filling connections equipped with approved automatic back-pressure check valves, and safety relief valves, all connections to the containers having openings for the flow of gas in excess of a No. 54 drill size shall be equipped with approved automatic excess flow valves to prevent discharge of content in case connections are broken.

(d) Liquid-level gaging devices:

(i) Variable liquid-level gages which require the venting of fuel to the atmosphere shall not be used on fuel containers of industrial trucks (including lift trucks).

(ii) On portable containers that may be filled in the vertical and/or horizontal position, the fixed liquid-level gage shall indicate maximum permitted filling level for both vertical and horizontal filling with the container oriented to place the safety relief valve in communication with the vapor space.

(iii) In the case of containers used solely in farm tractor service and charged at a point at least 50 feet from any important building, the fixed liquid-level gaging device may be so constructed that the outward flow of container content exceeds that passed by a No. 54 drill size opening, but in no case shall the flow exceed that passed by a No. 31 drill-size opening. An excess flow valve is not required. Fittings equipped with such restricted drill size opening and container on which they are used shall be marked to indicate the size of the opening.

(iv) All valves and connections on containers shall be adequately protected to prevent damage due to accidental contact with stationary objects or from loose objects thrown up from the road, and all valves shall be safeguarded against damage due to collision, overturning or other accident. For farm tractors where parts of the vehicle provide such protection to valves and fittings, the foregoing requirements shall be considered fulfilled. However, on removable type containers the protection for the fittings shall be permanently attached to the container.

(v) (Exchange of removable fuel containers preferably should be done outdoors but may be done indoors.) When removable fuel containers are used, means shall be provided in the fuel system to minimize the escape of fuel when the containers are exchanged. This shall be accomplished by one of the following methods:

(A) Using an approved automatic quick-closing coupling (a type closing in both directions when uncoupled) in the fuel line, or

(B) Closing the valve at the fuel container and allowing the engine to run until the fuel in the line is consumed.

(6) Piping—Including pipe, tubing, and fittings.

(a) Pipe from fuel container to first-stage regulator shall be not less than schedule 80 wrought iron or steel (black or galvanized), brass or copper; or seamless copper, brass, or steel tubing. Steel tubing shall have a minimum wall thickness of 0.049 inch. Steel pipe or tubing shall be adequately protected against exterior corrosion. Copper tubing shall be types K or L or equivalent having a minimum wall thickness of 0.032 inch. Approved flexible connections may be used between container and regulator or between regulator and gas-air mixer within the limits of approval. The use of aluminum pipe or tubing is prohibited. In the case of removable containers an approved flexible connection shall be used between the container and the fuel line.

(b) All piping shall be installed, braced, and supported so as to reduce to a minimum the possibility of vibration strains or wear.

(7) Safety devices.

(a) Spring-loaded internal type safety relief valves shall be used on all motor fuel containers.

(b) The discharge outlet from safety relief valves shall be located on the outside of enclosed spaces and as far as practicable from possible sources of ignition, and vented upward within 45 degrees of the vertical in such a manner as to prevent impingement of escaping gas upon containers, or parts of vehicles, or on vehicles in adjacent lines of traffic. A rain cap or other protector shall be used to keep water and dirt from collecting in the valve.

(c) When a discharge line from the container safety relief valve is used, the line shall be metallic, other than aluminum, and shall be sized, located, and maintained so as not to restrict the required flow of gas from the safety relief valve. Such discharge line shall be able to withstand the pressure resulting from the discharge of vapor when the safety relief valve is in the full open position. When flexibility is necessary, flexible metal hose or tubing shall be used.

(d) Portable containers equipped for volumetric filling may be filled in either the vertical or horizontal position only when oriented to place the safety relief valve in communication with the vapor space.

(e) WAC 296-24-47505 (10)(l) for hydrostatic relief valves shall apply.

(8) Vaporizers.

(a) Vaporizers and any part thereof and other devices that may be subjected to container pressure shall have a design pressure of at least 250 p.s.i.g.

(b) Each vaporizer shall have a valve or suitable plug which will permit substantially complete draining of the vaporizer. It shall be located at or near the lowest portion of the section occupied by the water or other heating medium.

(c) Vaporizers shall be securely fastened so as to minimize the possibility of becoming loosened.

(d) Each vaporizer shall be permanently marked at a visible point as follows:

(i) With the design pressure of the fuel-containing portion in p.s.i.g.

(ii) With the water capacity of the fuel-containing portion of the vaporizer in pounds.

(e) Devices to supply heat directly to a fuel container shall be equipped with an automatic device to cut off the supply of heat before the pressure inside the fuel container reaches 80 percent of the start to discharge pressure setting of the safety relief device on the fuel container.

(f) Engine exhaust gases may be used as a direct source of heat supply for the vaporization of fuel if the materials of construction of those parts of the vaporizer in contact with exhaust gases are resistant to the corrosive action of exhaust gases and the vaporizer system is designed to prevent excessive pressures.

(g) Vaporizers shall not be equipped with fusible plugs.

(9) Gas regulating and mixing equipment.

(a) Approved automatic pressure reducing equipment shall be installed in a secure manner between the fuel supply container and gas-air mixer for the purpose of reducing the pressure of the fuel delivered to the gas-air mixer.

(b) An approved automatic shutoff valve shall be provided in the fuel system at some point ahead of the inlet of the gas-air mixer, designed to prevent flow of fuel to the mixer when the ignition is off and the engine is not running. In the case of industrial trucks and engines operating in buildings other than those used exclusively to house engines, the automatic shutoff valve shall be designed to operate if the engine should stop. Atmospheric type regulators (zero governors) shall be considered adequate as an automatic shutoff valve only in cases of outdoor operation such as farm tractors, construction equipment, irrigation pump engines, and other outdoor stationary engine installations.

(c) The source of the air for combustion shall be completely isolated from the passenger compartment, ventilating system, or air-conditioning system.

(10) Stationary engines in buildings. Stationary engines and gas turbines installed in buildings, including portable engines used instead of or to supplement stationary engines, shall comply with the Standard for the Institution and Use of Stationary Combustion Engines and Gas Turbines, NFPA 37-1970, and the appropriate provisions of WAC 296-24-47505 through 296-24-47509.

(11) Portable engines in buildings.

(a) Portable engines may be used in buildings only for emergency use, except as provided by (11) of this section.

(b) Exhaust gases shall be discharged to outside the building or to an area where they will not constitute a hazard.

(c) Provision shall be made to supply sufficient air for combustion and cooling.

(d) An approved automatic shutoff valve shall be provided in the fuel system ahead of the engine, designed to prevent flow of fuel to the engine when the ignition is off or if the engine should stop.

(e) The capacity of LP-gas containers used with such engines shall comply with the applicable occupancy provision of WAC 296-24-47507(5).

(12) Industrial trucks inside buildings.

(a) Reserved.

(b) Reserved.

(c) Reserved.

(d) Trucks shall not be left unattended in areas occupied by the public.

(e) Reserved.

(13) Garaging LP-gas-fueled vehicles.

(a) LP-gas-fueled vehicles may be stored or serviced inside garages provided there are no leaks in the fuel system and the fuel tanks are not filled beyond the maximum filling capacity specified in WAC 296-24-47505 (12)(a).

(b) LP-gas-fueled vehicles being repaired in garages shall have the container shutoff valve closed except when fuel is required for engine operation.

(c) Such vehicles shall not be parked near sources of heat, open flames, or similar sources of ignition or near open pits unless such pits are adequately ventilated.

[Statutory Authority: RCW 49.17.010, 49.17.040, 49.17.050, 49.17.060. 04-19-051, § 296-24-47511, filed 9/14/04, effective 2/1/05. Statutory Authority: RCW 49.17.010, [49.17].040 and [49.17].050. 99-17-094, § 296-24-47511, filed 8/17/99, effective 12/1/99; Order 73-5, § 296-24-47511, filed 5/9/73 and Order 73-4, § 296-24-47511, filed 5/7/73.]

WAC 296-24-47513 Storage of containers awaiting use or resale. (1) Application. This section shall apply to the storage of portable containers not in excess of one thousand pounds water capacity, filled or partially filled, at user location but not connected for use, or in storage for resale by dealers or resellers. This section shall not apply to containers stored at charging plants or at plants devoted primarily to the storage and distribution of LP-gas or other petroleum products.

(2) General.

(a) Containers in storage shall be located so as to minimize exposure to excessive temperature rise, physical damage, or tampering by unauthorized persons.

(b) Containers when stored inside shall not be located near exits, stairways, or in areas normally used or intended for the safe exit of people.

(c) Container valves shall be protected while in storage as follows:

(i) By setting into recess of container to prevent the possibility of their being struck if the container is dropped upon a flat surface, or

(ii) By ventilated cap or collar, fastened to container capable of withstanding blow from any direction equivalent to that of a thirty-pound weight dropped four feet. Construction must be such that a blow will not be transmitted to a valve or other connection.

(d) The outlet valves of containers in storage shall be closed.

(e) Empty containers which have been in LP-gas service should preferably be stored in the open. When stored inside, they shall be considered as full containers for the purpose of determining the maximum quantity of LP-gas permitted by this section.

(3) Storage within buildings frequented by the public.

(a) DOT specification containers having a maximum individual water capacity of two and one-half pounds, used with completely self-contained hand torches and similar applications, are permitted to be stored or displayed in a building frequented by the public. The display of such containers shall be limited to a total of twenty-four units of each brand and size. The total quantity on display and in storage shall not exceed two hundred pounds LP-gas.

(b) Storage as provided in subsection (5) of this section shall not be permitted within or attached to such a building.

(4) Storage within buildings not frequented by the public (such as industrial buildings).

(a) The quantity of LP-gas stored shall not exceed three hundred pounds (approximately two thousand five hundred fifty cubic feet in vapor form) except as provided in subsection (5) of this section.

(b) Containers carried as a part of service equipment on highway mobile vehicles are not to be considered in the total storage capacity in (a) of this subsection provided such vehicles are stored in private garages, and are limited to one container per vehicle with an LP-gas capacity of not more than one hundred pounds. All container valves shall be closed.

(5) Storage within special buildings or rooms.

(a) The quantity of LP-gas stored in special buildings or rooms shall not exceed ten thousand pounds.

(b) The walls, floors, and ceilings of container storage rooms that are within or adjacent to other parts of the building shall be constructed of material having at least a two-hour fire resistance rating.

(c) A portion of the exterior walls or roof having an area not less than ten percent of that of the combined area of the enclosing walls and roof shall be of explosion relieving construction.

(d) Each opening from such storage rooms to other parts of the building shall be protected by a one and one-half-hour "(B)" fire door listed by a nationally recognized testing laboratory. Refer to federal regulation 29 CFR 1910.7 for definition of nationally recognized testing laboratory.

(e) Such rooms shall have no open flames for heating or lighting.

(f) Such rooms shall be adequately ventilated both top and bottom to the outside only. The openings from such vents shall be at least five feet away from any other opening into any building.

(g) The floors of such rooms shall not be below ground level. Any space below the floor shall be of solid fill or properly ventilated to the open air.

(h) Such storage rooms shall not be located adjoining the line of property occupied by schools, churches, hospitals, athletic fields or other points of public gathering.

(i) Fixed electrical equipment shall be installed in accordance with WAC 296-24-47505(18).

(6) Storage outside of buildings.

(a) Storage outside of buildings, for containers awaiting use or resale, shall be located in accordance with Table H-33 with respect to:

(i) The nearest important building or group of buildings;

(ii) The line of adjoining property which may be built upon;

(iii) Busy thoroughfares;

(vi) The line of adjoining property occupied by schools, churches, hospitals, athletic fields, or other points of public gathering.

TABLE H-33

Quantity of LP-Gas Stored:	Distance
500 pounds or less	0
501 to 2,500 pounds	0*
2,501 to 6,000 pounds	10 feet
6,001 to 10,000 pounds	20 feet
Over 10,000 pounds	25 feet

*Container or containers shall be at least ten feet from any building on adjoining property, any sidewalk, or any of the exposures described in (a)(iii) or (iv) of this subsection.

(b) Containers shall be in a suitable enclosure or otherwise protected against tampering.

(7) Fire protection. Storage locations other than supply depots separated and located apart from dealer, reseller, or user establishments shall be provided with at least one approved portable fire extinguisher having a minimum rating of 8-B, C.

Note: For additional requirements relating to portable fire extinguishers see WAC 296-800-300.

[Statutory Authority: RCW 49.17.010, [49.17].040, and [49.17].050. 01-17-033, § 296-24-47513, filed 8/8/01, effective 9/1/01. Statutory Authority: Chapter 49.17 RCW. 88-23-054 (Order 88-25), § 296-24-47513, filed 11/14/88. Statutory Authority: RCW 49.17.040, 49.17.050, 49.17.240, chapters 43.22 and 42.30 RCW. 80-17-015 (Order 80-21), § 296-24-47513, filed 11/13/80; Order 76-6, § 296-24-47513, filed 3/1/76; Order 73-5, § 296-24-47513, filed 5/9/73 and Order 73-4, § 296-24-47513, filed 5/7/73.]

WAC 296-24-47517 Liquefied petroleum gas service stations. (1) Application. This section applies to storage containers, and dispensing devices, and pertinent equipment in service stations where LP-gas is stored and is dispensed into fuel tanks of motor vehicles. See WAC 296-24-47511 for requirements covering use of LP-gas as a motor fuel. All requirements of WAC 296-24-47505 apply to this section unless otherwise noted.

(2) Design pressure and classification of storage containers. Storage containers shall be designed and classified in accordance with Table H-34.

(3) Container valves and accessories.

(a) A filling connection on the container shall be fitted with one of the following:

(i) A combination back-pressure check and excess flow valve.

(ii) One double or two single back-pressure valves.

(iii) A positive shutoff valve, in conjunction with either:

(A) An internal back-pressure valve, or

(B) An internal excess flow valve.

In lieu of an excess flow valve, filling connections may be fitted with a quick-closing internal valve, which shall remain closed except during operating periods. The mechanism for such valves may be provided with a secondary control which will cause it to close automatically in case of fire. When a fusible plug is used its melting point shall not exceed 220°F.

TABLE H-34

Container type	For gases with vapor press. not to exceed lb. per sq. in. gage at 100°F. (37.8°C.)	Minimum design pressure of container, lb. per sq. in gage	
		1949 and earlier editions of ASME Code (Par. U-68, U-69)	1949 edition of ASME Code (Par. U-200, U-201); 1950, 1952 1956, 1959, 1962, 1965, and 1968 (Division I) editions of ASME Code; All editions of API-ASME Code[2]
200[1]	215	200	250

[1]Container type may be increased by increments of 25. The minimum design pressure of containers shall be 100% of the container type designation when constructed under 1949 or earlier editions of ASME Code (Par. U-68 and U-69). The minimum design pressure of containers shall be 125% of the container type designation when constructed under: (1) The 1949 ASME Code (Par. U-200 and U-201), (2) 1950, 1952, 1956, 1959, 1962, 1965, and 1968 (Division I) editions of the ASME Code, and (3) all editions of the API-ASME Code.

[2]Construction of containers under the API-ASME Code is not authorized after July 1, 1961.

(b) A filling pipe inlet terminal not on the container shall be fitted with a positive shutoff valve in conjunction with either:

(i) A back pressure check valve, or

(ii) An excess flow check valve.

(c) All openings in the container except those listed below shall be equipped with approved excess flow check valves:

(i) Filling connections as provided in (3)(a) of this section.

(ii) Safety relief connections as provided in WAC 296-24-47505 (7)(b).

(iii) Liquid-level gaging devices as provided in WAC 296-24-47505 (7)(d) and (19)(d).

(iv) Pressure gage connections as provided in WAC 296-24-47505 (7)(e).

(d) All container inlets and outlets except those listed below shall be labeled to designate whether they connect with vapor or liquid (labels may be on valves):

(i) Safety relief valves.

(ii) Liquid-level gaging devices.

(iii) Pressure gages.

(e) Each storage container shall be provided with a suitable pressure gage.

(4) Safety-relief valves.

(a) All safety-relief devices shall be installed as follows:

(i) On the container and directly connected with the vapor space.

(ii) Safety-relief valves and discharge piping shall be protected against physical damage. The outlet shall be provided with loose-fitting rain caps. There shall be no return bends or restrictions in the discharge piping.

(iii) The discharge from two or more safety relief valves having the same pressure settings may be run into a common discharge header. The cross-sectional area of such header shall be at least equal to the sum of the individual discharges.

(iv) Discharge from any safety relief device shall not terminate in any building nor beneath any building.

(b) Aboveground containers shall be provided with safety relief valves as follows:

(i) The rate of discharge, which may be provided by one or more valves, shall be not less than that specified in WAC 296-24-47505 (10)(b).

(ii) The discharge from safety relief valves shall be vented to the open air unobstructed and vertically upwards in such a manner as to prevent any impingement of escaping gas upon the container; loose-fitting rain caps shall be used. On a container having a water capacity greater than 2,000 gallons, the discharge from the safety relief valves shall be vented away from the container vertically upwards to a point at least 7 feet above the container. Suitable provisions shall be made so that any liquid or condensate that may accumulate inside of the relief valve or its discharge pipe will not render the valve inoperative. If a drain is used, a means shall be provided to protect the container, adjacent containers, piping, or equipment against impingement of flame resulting from ignition of the product escaping from the drain.

(c) Underground containers shall be provided with safety relief valves as follows:

(i) The discharge from safety-relief valves shall be piped vertically upward to a point at least 10 feet above the ground. The discharge lines or pipes shall be adequately supported and protected against physical damage.

(ii) Where there is a probability of the manhole or housing becoming flooded, the discharge from regulator vent lines should be above the highest probable water level.

(iii) If no liquid is put into a container until after it is buried and covered, the rate of discharge of the relief valves may be reduced to not less than 30 percent of the rate shown in WAC 296-24-47505 (10)(b). If liquid fuel is present during installation of containers, the rate of discharge shall be the same as for aboveground containers. Such containers shall not be uncovered until emptied of liquid fuel.

(5) Capacity of liquid containers. Individual storage containers shall not exceed 30,000 gallons water capacity.

(6) Installation of storage containers.

(a) Each storage container used exclusively in service station operation shall comply with the following table which specifies minimum distances to a building, groups of buildings, and adjoining property lines which may be built upon.

Water capacity per container (gallons)	Minimum distances	
	Aboveground and underground (feet)	Between aboveground containers (feet)
Up to 2,000	25	3
Over 2,000	50	5

Note: The above distances may be reduced to not less than 10 feet for service station buildings of other than wood frame construction.

(i) Readily ignitible material including weeds and long dry grass, shall be removed within 10 feet of containers.

(ii) The minimum separation between LP-gas containers and flammable liquid tanks shall be 20 feet and the minimum separation between a container and the centerline of the dike shall be 10 feet.

(iii) LP-gas containers located near flammable liquid containers shall be protected against the flow or accumulation of flammable liquids by diking, diversion curbs, or grading.

(iv) LP-gas containers shall not be located within diked areas for flammable liquid containers.

(v) Field welding is permitted only on saddle plates or brackets which were applied by the container manufacturer.

(vi) When permanently installed containers are interconnected, provision shall be made to compensate for expansion, contraction, vibration, and settling of containers and interconnecting piping. Where flexible connections are used, they shall be of an approved type and shall be designed for a bursting pressure of not less than five times the vapor pressure of the product at 100°F. The use of nonmetallic hose is prohibited for interconnecting such containers.

(vii) Where high water table or flood conditions may be encountered protection against container flotation shall be provided.

(b) Aboveground containers shall be installed in accordance with this section.

(i) Containers may be installed horizontally or vertically.

(ii) Containers shall be protected by crash rails or guards to prevent physical damage unless they are so protected by virtue of their location. Vehicles shall not be serviced within 10 feet of containers.

(iii) Container foundations shall be of substantial masonry or other noncombustible material. Containers shall be mounted on saddles which shall permit expansion and contraction, and shall provide against the excessive concentration of stresses. Corrosion protection shall be provided for tank-mounting areas. Structural metal container supports shall be protected against fire. This protection is not required on prefabricated storage and pump assemblies, mounted on a common base, with container bottom not more than 24 inches above ground and whose water capacity is 2,000 gallons or less if the piping connected to the storage and pump assembly is sufficiently flexible to minimize the possibility of breakage or leakage in the event of failure of the container supports.

(c) Underground containers shall be installed in accordance with this section.

(i) Containers shall be given a protective coating before being placed under ground. This coating shall be equivalent to hot-dip galvanizing or to two coatings of red lead followed by a heavy coating of coal tar or asphalt. In lowering the container into place, care shall be exercised to minimize abrasion or other damage to the coating. Damage to the coating shall be repaired before back-filling.

(ii) Containers shall be set on a firm foundation (firm earth may be used) and surrounded with earth or sand firmly tamped in place. Backfill should be free of rocks or other abrasive materials.

(iii) A minimum of 2 feet of earth cover shall be provided. Where ground conditions make compliance with this requirement impractical, equivalent protection against physical damage shall be provided. The portion of the container to which manhole and other connections are attached need not be covered. If the location is subjected to vehicular traffic, containers shall be protected by a concrete slab or other cover adequate to prevent the weight of a loaded vehicle imposing concentrated direct loads on the container shell.

(7) Protection of container fittings. Valves, regulators, gages, and other container fittings shall be protected against tampering and physical damage.

(8) Transport truck unloading point.

(a) During unloading, the transport truck shall not be parked on public thoroughfares and shall be at least 5 feet from storage containers and shall be positioned so that shutoff valves are readily accessible.

(b) The filling pipe inlet terminal shall not be located within a building nor within 10 feet of any building or driveway. It shall be protected against physical damage.

(9) Piping, valves, and fittings.

(a) Piping may be underground, above ground, or a combination of both. It shall be well supported and protected against physical damage and corrosion.

(b) Piping laid beneath driveways shall be installed to prevent physical damage by vehicles.

(c) Piping shall be wrought iron or steel (black or galvanized), brass or copper pipe; or seamless copper, brass, or steel tubing and shall be suitable for a minimum pressure of 250 p.s.i.g. Pipe joints may be screwed, flanged, brazed, or welded. The use of aluminum alloy piping or tubing is prohibited.

(d) All shutoff valves (liquid or gas) shall be suitable for liquefied petroleum gas service and designed for not less than the maximum pressure to which they may be subjected. Valves which may be subjected to container pressure shall have a rated working pressure of at least 250 p.s.i.g.

(e) All materials used for valve seats, packing, gaskets, diaphragms, etc., shall be resistant to the action of LP-gas.

(f) Fittings shall be steel, malleable iron, or brass having a minimum working pressure of 250 p.s.i.g. Cast iron pipe fittings, such as ells, tees and unions shall not be used.

(g) All piping shall be tested after assembly and proved free from leaks at not less than normal operating pressures.

(h) Provision shall be made for expansion, contraction, jarring, and vibration, and for settling. This may be accomplished by flexible connections.

(10) Pumps and accessories. All pumps and accessory equipment shall be suitable for LP-gas service, and designed for not less than the maximum pressure to which they may be subjected. Accessories shall have a minimum rated working pressure of 250 p.s.i.g. Positive displacement pumps shall be equipped with suitable pressure actuated bypass valves permitting flow from pump discharge to storage container or pump suction.

(11) Dispensing devices.

(a) Meters, vapor separators, valves, and fittings in the dispenser shall be suitable for LP-gas service and shall be designed for a minimum working pressure of 250 p.s.i.g.

(b) Provisions shall be made for venting LP-gas contained in a dispensing device to a safe location.

(c) Pumps used to transfer LP-gas shall be equipped to allow control of the flow and to prevent leakage or accidental discharge. Means shall be provided outside the dispensing device to readily shut off the power in the event of fire or accident.

(d) A manual shutoff valve and an excess flow check valve shall be installed downstream of the pump and ahead of the dispenser inlet.

(i) Dispensing hose shall be resistant to the action of LP-gas in the liquid phase and designed for a minimum bursting pressure of 1,250 p.s.i.g.

(ii) An excess flow check valve or automatic shutoff valve shall be installed at the terminus of the liquid line at the point of attachment of the dispensing hose.

(e) LP-gas dispensing devices shall be located not less than 10 feet from aboveground storage containers greater than 2,000 gallons water capacity. The dispensing devices shall not be less then 20 feet from any building (not including canopies), basement, cellar, pit, or line of adjoining property which may be built upon and not less than 10 feet from sidewalks, streets, or thoroughfares. No drains or blowoff lines shall be directed into or in proximity to the sewer systems used for other purposes.

(i) LP-gas dispensing devices shall be installed on a concrete foundation or as part of a complete storage and dispensing assembly mounted on a common base, and shall be adequately protected from physical damage.

(ii) LP-gas dispensing devices shall not be installed within a building except that they may be located under a weather shelter or canopy provided this area is not enclosed on more than two sides. If the enclosing sides are adjacent to each other, the area shall be properly ventilated.

(f) The dispensing of LP-gas into the fuel container of a vehicle shall be performed by a competent attendant who shall remain at the LP-gas dispenser during the entire transfer operation.

(12) Additional standards. There shall be no smoking on the driveway of service stations in the dispensing areas or transport truck unloading areas. Conspicuous signs prohibiting smoking shall be posted within sight of the customer being served. Letters on such signs shall be not less than 4 inches high. The motors of all vehicles being fueled shall be shut off during the fueling operations.

(13) Electrical. Electrical equipment and installations shall conform to WAC 296-24-47505 (17) and (18).

(14) Fire protection. Each service station shall be provided with at least one approved portable fire extinguisher having at least an 8-B, C, rating.

Note: For additional requirements relating to portable fire extinguishers see WAC 296-800-300.

[Statutory Authority: RCW 49.17.010, [49.17].040, and [49.17].050. 01-17-033, § 296-24-47517, filed 8/8/01, effective 9/1/01; Order 73-5, § 296-24-47517, filed 5/9/73 and Order 73-4, § 296-24-47517, filed 5/7/73.]

PART F-2
STORAGE AND HANDLING OF ANHYDROUS AMMONIA

Note: Storage and handling of anhydrous ammonia has been moved to chapter 296-826 WAC

PART G-1
MEANS OF EGRESS

WAC 296-24-55001 Definitions. (1) Approved. For the purposes of chapter 296-24 WAC, Parts G-1, G-2 and G-3, approved shall mean listed or approved equipment by a nationally recognized testing laboratory. Refer to WAC 296-24-58503 (3)(c)(iv)(A) for definition of listed, and federal regulation 29 CFR 1910.7 for nationally recognized testing laboratory.

(2) Emergency action plan. A plan for a workplace, or parts thereof, describing what procedures the employer and employees must take to ensure employee safety from fire or other emergencies.

(3) Emergency escape route. The route that employees are directed to follow in the event they are required to evacuate the workplace or seek a designated refuge area.

[Statutory Authority: RCW 49.17.010, [49.17].040, and [49.17].050. 01-17-033, § 296-24-55001, filed 8/8/01, effective 9/1/01. Statutory Authority: Chapter 49.17 RCW. 94-15-096 (Order 94-07), § 296-24-55001, filed 7/20/94, effective 9/20/94; 88-23-054 (Order 88-25), § 296-24-55001, filed 11/14/88. Statutory Authority: RCW 49.17.040 and 49.17.050. 82-02-003 (Order 81-32), § 296-24-55001, filed 12/24/81; Order 73-5, § 296-24-55001, filed 5/9/73 and Order 73-4, § 296-24-55001, filed 5/7/73.]

WAC 296-24-56525 Automatic sprinkler systems. All automatic sprinkler systems shall be continuously maintained in reliable operating condition at all times, and such periodic inspections and tests shall be made as are necessary to assure proper maintenance.

[Order 73-5, § 296-24-56525, filed 5/9/73 and Order 73-4, § 296-24-56525, filed 5/7/73.]

WAC 296-24-56527 Fire alarm signaling systems. The employer shall assure that fire alarm signaling systems are maintained and tested in accordance with the requirements of WAC 296-800-31080.

[Statutory Authority: RCW 49.17.010, 49.17.040, 49.17.050, and 49.17.060. 04-07-161, § 296-24-56527, filed 3/23/04, effective 6/1/04. Statutory Authority: RCW 49.17.040 and 49.17.050. 82-02-003 (Order 81-32), § 296-24-56527, filed 12/24/81; Order 73-5, § 296-24-56527, filed 5/9/73 and Order 73-4, § 296-24-56527, filed 5/7/73.]

WAC 296-24-567 Employee emergency plans and fire prevention plans. (1) Emergency action plan.

(a) Scope and application. This subdivision applies to all emergency action plans required by a particular WISHA standard. The emergency action plan shall be in writing, and shall cover those designated actions employers and employees must take to ensure employee safety from fire and other emergencies.

(b) Elements. The following elements, at a minimum, shall be included in the plan:

(i) Emergency escape procedures and emergency escape route assignments;

(ii) Procedures to be followed by employees who remain to operate critical plant operations before they evacuate;

(iii) Procedures to account for all employees after emergency evacuation has been completed;

(iv) Rescue and medical duties for those employees who are to perform them;

(v) The preferred means of reporting fires and other emergencies; and

(vi) Names or regular job titles of persons or departments who can be contacted for further information or explanation of duties under the plan.

(c) Alarm systems.

You must establish an employee alarm system which complies with WAC 296-800-310. The employee alarm system must provide warning for necessary emergency action as called for in your emergency action plan. The employee alarm must be distinctive and recognizable as a signal to perform actions designed under the emergency action plan.

(d) Evacuation. The employer shall establish in the emergency action plan the types of evacuation to be used in emergency circumstances.

(e) Training.

(i) Before implementing the emergency action plan, the employer shall designate and train a sufficient number of persons to assist in the safe and orderly emergency evacuation of employees.

(ii) The employer shall review the plan with each employee covered by the plan at the following times:

(A) Initially when the plan is developed;

(B) Whenever the employee's responsibilities or designated actions under the plan change; and

(C) Whenever the plan is changed.

(iii) The employer shall review with each employee upon initial assignment those parts of the plan which the employee must know to protect the employee in the event of an emergency. The written plan shall be kept at the workplace and made available for employee review.

(2) Fire prevention plan.

(a) Scope and application. This subsection applies to all fire prevention plans required by a particular WISHA standard. The fire prevention plan shall be in writing.

(b) Elements. The following elements, at a minimum, shall be included in the fire prevention plan:

(i) A list of the major workplace fire hazards and their proper handling and storage procedures, potential ignition sources (such as welding, smoking and others) and their control procedures, and the type of fire protection equipment or systems which can control a fire involving them;

(ii) Names or regular job titles of those personnel responsible for maintenance of equipment and systems installed to prevent or control ignitions or fires; and

(iii) Names or regular job titles of those personnel responsible for control of fuel source hazards.

(c) Housekeeping. The employer shall control accumulations of flammable and combustible waste materials and residues so that they do not contribute to a fire emergency. The housekeeping procedures shall be included in the written fire prevention plan.

(d) Training.

(i) The employer shall apprise employees of the fire hazards of the materials and processes to which they are exposed.

(ii) The employer shall review with each employee upon initial assignment those parts of the fire prevention plan which the employee must know to protect the employee in the event of an emergency. The written plan shall be kept in the workplace and made available for employee review.

(e) Maintenance. The employer shall regularly and properly maintain, according to established procedures, equipment and systems installed on heat producing equipment to prevent accidental ignition of combustible materials. The maintenance procedures shall be included in the written fire prevention plan.

[Statutory Authority: RCW 49.17.010, [49.17].040, and [49.17].050. 01-11-038, § 296-24-567, filed 5/9/01, effective 9/1/01. Statutory Authority: Chapter 49.17 RCW. 89-11-035 (Order 89-03), § 296-24-567, filed 5/15/89, effective 6/30/89. Statutory Authority: RCW 49.17.040 and 49.17.050. 82-02-003 (Order 81-32), § 296-24-567, filed 12/24/81.]

WAC 296-24-56701 Appendix. This appendix serves as a nonmandatory guideline to assist employers in complying with the appropriate requirements.

(1) Employee emergency plans. Emergency action plan elements. The emergency action plan should address emergencies that the employer may reasonably expect in the workplace. Examples are: Fire, toxic chemical releases; hurricanes; tornadoes; blizzards; floods; and others. The elements of the emergency action plan presented in WAC 296-24-567 (1)(b) can be supplemented by the following to more effectively achieve employee safety and health in an emergency. The employer should list in detail the procedures to be taken by those employees who have been selected to remain behind to care for essential plant operations until their evacuations become absolutely necessary. Essential plant operations may include the monitoring of plant power supplies, water supplies, and other essential services which cannot be shut down for every emergency alarm. Essential plant operations may also include chemical or manufacturing processes which must be shut down in stages or steps where certain employees must be present to assure that safe shut down procedures are completed.

The use of floor plans or workplace maps which clearly show the emergency escape routes should be included in the emergency action plan. Color coding will aid employees in determining their route assignments.

The employer should also develop and explain in detail what rescue and medical first-aid duties are to be performed and by whom. All employees are to be told what actions they are to take in these emergency situations that the employer anticipates may occur in the workplace.

(2) Emergency evacuation. At the time of an emergency, employees should know what type of evacuation is necessary and what their role is in carrying out the plan. In some cases where the emergency is very grave, total and immediate evacuation of all employees is necessary. In other emergencies, a partial evacuation of nonessential employees with a delayed evacuation of others may be necessary for continued plant operation. In some cases, only those employees in the immediate area of the fire may be expected to evacuate or move to a safe area such as when a local application fire suppression system discharge employee alarm is sounded. Employees must be sure that they know what is expected of them in all such emergency possibilities which have been planned in order to provide assurance of their safety from fire or other emergency.

The designation of refuge or safe areas for evacuation should be determined and identified in the plan. In a building divided into fire zones by fire walls, the refuge area may still be within the same building but in a different zone from where the emergency occurs.

Exterior refuge or safe areas may include parking lots, open fields or streets which are located away from the site of the emergency and which provide sufficient space to accommodate the employees. Employees should be instructed to move away from the exit discharge doors of the building, and to avoid congregating close to the building where they may hamper emergency operations.

(3) Emergency action plan training. The employer should assure that an adequate number of employees are available at all times during working hours to act as evacuation wardens so that employees can be swiftly moved from the danger location to the safe areas. Generally, one warden for each twenty employees in the workplace should be able to provide adequate guidance and instruction at the time of a fire emergency. The employees selected or who volunteer to serve as wardens should be trained in the complete workplace layout and the various alternative escape routes from the workplace. All wardens and fellow employees should be made aware of handicapped employees who may need extra assistance, such as using the buddy system, and of hazardous areas to be avoided during emergencies. Before leaving, wardens should check rooms and other enclosed spaces in the

workplace for employees who may be trapped or otherwise unable to evacuate the area.

After the desired degree of evacuation is completed, the wardens should be able to account for or otherwise verify that all employees are in the safe areas.

In buildings with several places of employment, employers are encouraged to coordinate their plans with the other employers in the building. A building-wide or standardized plan for the whole building is acceptable provided that the employers inform their respective employees of their duties and responsibilities under the plan. The standardized plan need not be kept by each employer in the multiemployer building provided there is an accessible location within the building where the plan can be reviewed by affected employees. When multiemployer, building-wide plans are not feasible, employers should coordinate their plans with the other employers within the building to assure that conflicts and confusion are avoided during time of emergencies. In multistory buildings where more than one employer is on a single floor, it is essential that these employers coordinate their plans with each other to avoid conflicts and confusion.

(4) Fire prevention housekeeping. The standard calls for the control of accumulations of flammable and combustible waste materials.

It is the intent of this standard to assure that hazardous accumulations of combustible waste materials are controlled so that a fast developing fire, rapid spread of toxic smoke, or an explosion will not occur. This does not necessarily mean that each room has to be swept each day. Employers and employees should be aware of the hazardous properties of materials in their workplaces, and the degree of hazard each poses. Certainly, oil soaked rags have to be treated differently than general paper trash in office areas. However, large accumulations of waste paper or corrugated boxes, etc., can pose a significant fire hazard. Accumulations of materials which can cause large fires or generate dense smoke that are easily ignited or may start from spontaneous combustion, are the types of materials with which this standard is concerned. Such combustible materials may be easily ignited by matches, welder's sparks, cigarettes, and similar low level energy ignition sources.

(5) Maintenance of equipment under the fire prevention plan. Certain equipment is often installed in workplaces to control heat sources or to detect fuel leaks. An example is a temperature limit switch often found on deep-fat food fryers found in restaurants. There may be similar switches for high temperature dip tanks, or flame failure and flashback arrester devices on furnaces and similar heat producing equipment. If these devices are not properly maintained or if they become inoperative, a definite fire hazard exists. Again employees and supervisors should be aware of the specific type of control devices on equipment involved with combustible materials in the workplace and should make sure, through periodic inspection or testing, that these controls are operable. Manufacturers' recommendations should be followed to assure proper maintenance procedures.

[Statutory Authority: RCW 49.17.040 and 49.17.050. 82-02-003 (Order 81-32), § 296-24-56701, filed 12/24/81.]

PART G-2
FIRE PROTECTION

WAC 296-24-585 Fire protection.

[Order 73-5, § 296-24-585, filed 5/9/73 and Order 73-4, § 296-24-585, filed 5/7/73.]

WAC 296-24-58501 Definitions applicable to fire protection. (1) "Class A fires" are fires in ordinary combustible materials, such as wood, cloth, paper, and rubber.

(2) "Class B fires" are fires in flammable liquids, gases, and greases.

(3) "Class C fires" are fires which involve energized electrical equipment where the electrical nonconductivity of the extinguishing media is of importance. (When electrical equipment is deenergized, extinguisher for Class A or B fires may be used safely.)

(4) "Class D fires" are fires in combustible metals, such as magnesium, titanium, zirconium, sodium, and potassium.

(5) Classification of portable fire extinguishers: "Portable fire extinguishers" are classified for use on certain classes of fires and rated for relative extinguishing effectiveness at a temperature of plus 70°F by nationally recognized testing laboratories. This is based upon the preceding classification of fires and the fire extinguishment potentials as determined by fire tests.

Note: The classification and rating system described in this section is that used by Underwriters' Laboratories, Inc. and Underwriters' Laboratories of Canada and is based on extinguishing preplanned fires of determined size and description as follows:

(a) Class A rating—Wood and excelsior fires excluding deep-seated conditions.

(b) Class B rating—Two-inch depth gasoline fires in square pans.

(c) Class C rating—No fire test. Agent must be a nonconductor of electricity.

(d) Class D rating—Special tests on specific combustible metal fires.

(6) A "light hazard" is a situation where the amount of combustibles or flammable liquids present is such that fires of small size may be expected. These may include offices, schoolrooms, churches, assembly halls, telephone exchanges, etc.

(7) An "ordinary hazard" is a situation where the amount of combustibles or flammable liquids present is such that fires of moderate size may be expected. These may include mercantile storage and display, auto showrooms, parking garages, light manufacturing, warehouses not classified as extra hazard, school shop areas, etc.

(8) An "extra hazard" is a situation where the amount of combustibles or flammable liquids present is such that fires of severe magnitude may be expected. These may include woodworking, auto repair, aircraft servicing, warehouses with high-piled (14 feet or higher) combustibles, and processes such as flammable liquid handling, painting, dipping, etc.

(9) Sprinkler system: A "sprinkler system," for fire protection purposes, is an integrated system of underground and overhead piping designed in accordance with fire protection

engineering standards. The system includes a suitable water supply, such as a gravity tank, fire pump, reservoir, or pressure tank and/or connection by underground piping to a city main. The portion of the sprinkler system above ground is a network of specially sized or hydraulically designed piping installed in a building, structure or area, generally overhead, and to which sprinklers are connected in a systematic pattern. The system includes a controlling valve and a device for actuating an alarm when the system is in operation. The system is usually activated by heat from a fire and discharges water over the fire area.

Note: The design and installation of water supply facilities such as gravity tanks, fire pumps, reservoirs, or pressure tanks, and underground piping are covered by NFPA Standards No. 22-1970, Water Tanks for Private Fire Protection; No. 20-1970, Installation of Centrifugal Fire Pumps and No. 24-1970, Outside Protection.

(10) Sprinkler alarms: A "sprinkler alarm" unit is an assembly of apparatus approved for the service and so constructed and installed that any flow of water from a sprinkler system equal to or greater than that from a single automatic sprinkler will result in an audible alarm signal on the premises.

(11) Class of service—Standpipe systems: "Standpipe systems" are grouped into three general classes of service for the intended use in the extinguishment of fire.

(a) Class I: For use by fire departments and those trained in handling heavy fire streams (2 1/2-inch hose).

(b) Class II: For use primarily by the building occupants until the arrival of the fire department (small hose).

(c) Class III: For use by either fire departments and those trained in handling heavy hose streams or by the building occupants.

(12) Class I service: "Class I service" is a standpipe system capable of furnishing the effective fire streams required during the more advanced stages of fire on the inside of buildings or for exposure fire.

(13) Class II service: "Class II service" is a standpipe system which affords a ready means for the control of incipient fires by the occupants of buildings during working hours and by watchperson and those present during the night time and holidays.

(14) Class III service: "Class III service" is a standpipe system capable of furnishing the effective fire streams required during the more advanced stages of fire on the inside of buildings as well as providing a ready means for the control of fires by the occupants of the building.

(15) Standpipe system: "Standpipe systems" are usually of the following types:

(a) A wet standpipe system having a supply valve open and water pressure maintained at all times.

(b) A standpipe system so arranged through the use of approved devices as to admit water to the system automatically by opening a hose valve.

(c) A standpipe system arranged to admit water to the system through manual operation of approved remote control devices located at each hose station.

(d) Dry standpipe having no permanent water supply. See also (11) of this section.

(16) Type I storage: "Type I storage" is that in which combustible commodities or noncombustible commodities involving combustible packaging or storage aids are stored over 15 feet but not more than 21 feet high in solid piles or over 12 feet but not more that 21 feet high in piles that contain horizontal channels. Minor quantities of commodities of hazard greater than ordinary combustibles may be included without affecting this general classification.

(17) Type II storage: "Type II storage" is that in which combustible commodities or noncombustible commodities involving combustible packaging or storage aids are stored not over 15 feet high in solid piles or not over 12 feet high in piles that contain horizontal channels. Minor quantities of commodities of hazard greater than ordinary combustibles may be included without affecting this general classification.

(18) Type III storage: "Type III storage" is that in which the stored commodities, packaging, and storage aids are noncombustible or contain only a small concentration of combustibles which are incapable of producing a fire that would cause appreciable damage to the commodities stored or to noncombustible wall, floor or roof construction. Ordinary combustible commodities in completely sealed noncombustible containers may qualify in this classification. General commodity storage that is subject to frequent changing and storage of combustible packaging and storage aids is excluded from this category.

(19) Approved: "Approved" means listed or approved by: (a) At least one of the following nationally recognized testing laboratories: Factory Mutual Engineering Corp.; Underwriters' Laboratories, Inc., or (b) federal agencies such as Mine Safety and Health Administration (MSHA); the National Institute for Occupational Safety and Health (NIOSH); Department of Transportation; or U.S. Coast Guard, which issue approvals for such equipment.

[Statutory Authority: Chapter 49.17 RCW. 94-15-096 (Order 94-07), § 296-24-58501, filed 7/20/94, effective 9/20/94; Order 74-27, § 296-24-58501, filed 5/7/74; Order 73-5, § 296-24-58501, filed 5/9/73 and Order 73-4, § 296-24-58501, filed 5/7/73.]

WAC 296-24-58503 Scope, application and definitions applicable. (1) Scope. This section contains requirements for fire brigades, and all portable and fixed fire suppression equipment, fire detection systems, and fire or employee alarm systems installed to meet the fire protection requirements of this chapter.

(2) Application. This section applies to all employments except for maritime, construction and agriculture.

(3) Definitions applicable to this section.

(a) "After-flame," means the time a test specimen continues to flame after the flame source has been removed.

(b) "Aqueous film forming foam (AFFF)," means a fluorinated surfactant with a foam stabilizer which is diluted with water to act as a temporary barrier to exclude air from mixing with the fuel vapor by developing an aqueous film on the fuel surface of some hydrocarbons which is capable of suppressing the generation of fuel vapors.

(c) "Approved," means acceptable to the director under the following criteria:

(i) If it is accepted, or certified, or listed, or labeled or otherwise determined to be safe by a nationally recognized testing laboratory; or

(ii) With respect to an installation or equipment of a kind which no nationally recognized testing laboratory accepts,

certifies, lists, labels, or determines to be safe, if it is inspected or tested by another federal agency and found in compliance with the provisions of the applicable National Fire Protection Association Fire Code; or

(iii) With respect to custom-made equipment or related installations which are designed, fabricated for, and intended for use by its manufacturer on the basis of test data which the employer keeps and makes available for inspection to the director; and

(iv) For the purposes of (c) of this subsection:

(A) Equipment is listed if it is of a kind mentioned in a list which is published by a nationally recognized testing laboratory which makes periodic inspections of the production of such equipment and which states that such equipment meets nationally recognized standards or has been tested and found safe for use in a specified manner;

(B) Equipment is labeled if there is attached to it a label, symbol, or other identifying mark of a nationally recognized testing laboratory which makes periodic inspections of the production of such equipment and whose labeling indicates compliance with nationally recognized standards or tests to determine safe use in a specified manner;

(C) Equipment is accepted if it has been inspected and found by a nationally recognized testing laboratory to conform to specified plans or to procedures of applicable codes;

(D) Equipment is certified if it has been tested and found by a nationally recognized testing laboratory to meet nationally recognized standards or to be safe for use in a specified manner or is of a kind whose production is periodically inspected by a nationally recognized testing laboratory, and if it bears a label, tag, or other record of certification; and

(E) Refer to federal regulation 29 CFR 1910.7 for definition of nationally recognized testing laboratory.

(d) "Automatic fire detection device," means a device designed to automatically detect the presence of fire by heat, flame, light, smoke or other products of combustion.

(e) "Buddy-breathing device," means an accessory to self-contained breathing apparatus which permits a second person to share the same air supply as that of the wearer of the apparatus.

(f) "Carbon dioxide," means a colorless, odorless, electrically nonconductive inert gas (chemical formula CO_2) that is a medium for extinguishing fires by reducing the concentration of oxygen or fuel vapor in the air to the point where combustion is impossible.

(g) "Class A fire," means a fire involving ordinary combustible materials such as paper, wood, cloth, and some rubber and plastic materials.

(h) "Class B fire," means a fire involving flammable or combustible liquids, flammable gases, greases and similar materials, and some rubber and plastic materials.

(i) "Class C fire," means a fire involving energized electrical equipment where safety to the employee requires the use of electrically nonconductive extinguishing media.

(j) "Class D fire," means a fire involving combustible metals such as magnesium, titanium, zirconium, sodium, lithium and potassium.

(k) "Dry chemical," means an extinguishing agent composed of very small particles of chemicals such as, but not limited to, sodium bicarbonate, potassium bicarbonate, urea-based potassium bicarbonate, potassium chloride, or mono-ammonium phosphate supplemented by special treatment to provide resistance to packing and moisture absorption (caking) as well as to provide proper flow capabilities. Dry chemical does not include dry powders.

(l) "Dry powder," means a compound used to extinguish or control Class D fires.

(m) "Education," means the process of imparting knowledge or skill through systematic instruction. It does not require formal classroom instruction.

(n) "Enclosed structure," means a structure with a roof or ceiling and at least two walls which may present fire hazards to employees, such as accumulations of smoke, toxic gases and heat similar to those found in buildings.

(o) "Extinguisher classification," means the letter classification given an extinguisher to designate the class or classes of fire on which an extinguisher will be effective.

(p) "Extinguisher rating," means the numerical rating given to an extinguisher which indicates the extinguishing potential of the unit based on standardized tests developed by Underwriters' Laboratories, Inc.

(q) "Fixed extinguishing system," means a permanently installed system that either extinguishes or controls a fire at the location of the system.

(r) "Flame resistance," is the property of materials, or combinations of component materials, to retard ignition and restrict the spread of flame.

(s) "Foam," means a stable aggregation of small bubbles which flow freely over a burning liquid surface and form a coherent blanket which seals combustible vapors and thereby extinguishes the fire.

(t) "Gaseous agent," is a fire extinguishing agent which is in the gaseous state at normal room temperature and pressure. It has low viscosity, can expand or contract with changes in pressure and temperature, and has the ability to diffuse readily and to distribute itself uniformly throughout an enclosure.

(u) "Halon 1211," means a colorless, faintly sweet smelling, electrically nonconductive liquefied gas (chemical formula $CBrC1F_2$) which is a medium for extinguishing fires by inhibiting the chemical chain reaction of fuel and oxygen. It is also known as bromochlorodifluoromethane.

(v) "Halon 1301," means a colorless, odorless, electrically nonconductive gas (chemical formula $CBrF_3$) which is a medium for extinguishing fires by inhibiting the chemical chain reaction of fuel and oxygen. It is also known as bromotrifluoromethane.

(w) "Helmet," is a head protective device consisting of a rigid shell, energy absorption system and chin strap intended to be worn to provide protection for the head or portions thereof, against impact, flying or falling objects, electric shock, penetration, heat and flame.

(x) "Incipient stage fire," means a fire which is in the initial or beginning stage and which can be controlled or extinguished by portable fire extinguishers, Class II standpipe or small hose systems without the need for protective clothing or breathing apparatus.

(y) Industrial fire brigade: An organized group of employees whose primary employment is other than firefighting who are knowledgeable, trained and skilled in specialized operations based on site-specific hazards present at a

single commercial facility or facilities under the same management.

(z) "Inspection," means a visual check of fire protection systems and equipment to ensure that they are in place, charged, and ready for use in the event of a fire.

(aa) "Interior structural firefighting," means the physical activity of fire suppression, rescue or both, inside of buildings or enclosed structures which are involved in a fire situation beyond the incipient stage.

(bb) "Lining," means a material permanently attached to the inside of the outer shell of a garment for the purpose of thermal protection and padding.

(cc) "Local application system," means a fixed fire suppression system which has a supply of extinguishing agent, with nozzles arranged to automatically discharge extinguishing agent directly on the burning material to extinguish or control a fire.

(dd) "Maintenance," means the performance of services on fire protection equipment and systems to assure that they will perform as expected in the event of a fire. Maintenance differs from inspection in that maintenance requires the checking of internal fitting, devices and agent supplies.

(ee) "Multipurpose dry chemical," means a dry chemical which is approved for use on Class A, Class B and Class C fires.

(ff) "Outer shell," is the exterior layer of material on the fire coat and protective trousers which forms the outermost barrier between the firefighter and the environment. It is attached to the vapor barrier and liner and is usually constructed with a storm flap, suitable closures, and pockets.

(gg) "Positive-pressure breathing apparatus," means self-contained breathing apparatus in which the pressure in the breathing zone is positive in relation to the immediate environment during inhalation and exhalation.

(hh) "Predischarge employee alarm," means an alarm which will sound at a set time prior to actual discharge of an extinguishing system so that employees may evacuate the discharge area prior to system discharge.

(ii) "Quick disconnect valve," means a device which starts the flow of air by inserting of the hose (which leads from the facepiece) into the regulator of self-contained breathing apparatus, and stops the flow of air by disconnection of the hose from the regulator.

(jj) "Sprinkler alarm," means an approved device installed so that any waterflow from a sprinkler system equal to or greater than that from single automatic sprinkler will result in an audible alarm signal on the premises.

(kk) "Sprinkler system," means a system of piping designed in accordance with fire protection engineering standards and installed to control or extinguish fires. The system includes an adequate and reliable water supply, and a network of specially sized piping and sprinklers which are interconnected. The system also includes a control valve and a device for actuating an alarm when the system is in operation.

(ll) "Standpipe systems:"

(i) "Class I standpipe system," means a two and one-half-inch (6.3 cm) hose connection for use by fire departments and those trained in handling heavy fire streams.

(ii) "Class II standpipe system," means a one and one-half-inch (3.8 cm) hose system which provides a means for the control or extinguishment of incipient stage fires.

(iii) "Class III standpipe system," means a combined system of hose which is for the use of employees trained in the use of hose operations and which is capable of furnishing effective water discharge during the more advanced stages of fire (beyond the incipient stage) in the interior of workplaces. Hose outlets are available for both one and one-half-inch (3.8 cm) and two and one-half-inch (6.3 cm) hose.

(iv) "Small hose system," means a system of hose ranging in diameter from five-eighths-inch (1.6 cm) up to one and one-half-inch (3.8 cm) which is for the use of employees and which provides a means for the control and extinguishment of incipient stage fires.

(mm) "Total flooding system," means a fixed suppression system which is arranged to automatically discharge a predetermined concentration of agent into an enclosed space for the purpose of fire extinguishment or control.

(nn) "Training," means the process of making proficient through instruction and hands-on practice in the operation of equipment, including respiratory protection equipment, that is expected to be used in the performance of assigned duties.

(oo) "Vapor barrier," means that material used to prevent or substantially inhibit the transfer of water, corrosive liquids and steam or other hot vapors from the outside of a garment to the wearer's body.

[Statutory Authority: RCW 49.17.040. 99-05-080, § 296-24-58503, filed 2/17/99, effective 6/1/99. Statutory Authority: RCW 49.17.010, [49.17].050 and [49.17].060. 95-22-015, § 296-24-58503, filed 10/20/95, effective 1/16/96. Statutory Authority: Chapter 49.17 RCW. 94-06-068 (Order 93-17), § 296-24-58503, filed 3/2/94, effective 3/1/95; 88-23-054 (Order 88-25), § 296-24-58503, filed 11/14/88; 87-24-051 (Order 87-24), § 296-24-58503, filed 11/30/87. Statutory Authority: RCW 49.17.040 and 49.17.050. 82-02-003 (Order 81-32), § 296-24-58503, filed 12/24/81.]

PART G-3
FIRE SUPPRESSION EQUIPMENT

WAC 296-24-592 Portable fire extinguishers. All sections of this chapter which include WAC 296-24-592 in the section number apply to portable fire extinguishers.

[Statutory Authority: RCW 49.17.040 and 49.17.050. 82-02-003 (Order 81-32), § 296-24-592, filed 12/24/81.]

WAC 296-24-59201 Scope and application. The requirements of this section apply to the hydrostatic testing of portable fire extinguishers provided for the use of employees.

[Statutory Authority: RCW 49.17.010, [49.17].040, and [49.17].050. 01-11-038, § 296-24-59201, filed 5/9/01, effective 9/1/01. Statutory Authority: RCW 49.17.040 and 49.17.050. 82-02-003 (Order 81-32), § 296-24-59201, filed 12/24/81.]

WAC 296-24-59212 Hydrostatic testing. (1) In addition to an external visual examination, the employer shall assure that an internal examination of cylinders and shells to be tested is made prior to the hydrostatic tests.

(2) The employer shall assure that portable fire extinguishers are hydrostatically tested whenever they show new evidence of corrosion or mechanical injury.

(3) The employer shall assure that hydrostatic tests are performed on extinguisher hose assemblies which are equipped with a shut-off nozzle at the discharge end of the hose. The test interval shall be the same as specified for the extinguisher on which the hose is installed.

(4) The employer shall assure that carbon dioxide hose assemblies with a shut-off nozzle are hydrostatically tested at 1,250 psi (8,620 kPa).

(5) The employer shall assure that dry chemical and dry powder hose assemblies with a shut-off nozzle are hydrostatically tested at 300 psi (2,070 kPa).

(6) Hose assemblies passing a hydrostatic test do not require any type of recording or stamping.

(7) The employer shall assure that hose assemblies for carbon dioxide extinguishers that require a hydrostatic test are tested within a protective cage device.

(8) The employer shall assure that carbon dioxide extinguishers and nitrogen or carbon dioxide cylinders used with wheeled extinguishers are tested every five years at 5/3 of the service pressure as stamped into the cylinder. Nitrogen cylinders which comply with 29 CFR 173.34 (e)(15) may be hydrostatically tested every ten years.

(9) The employer shall assure that all stored pressure and Halon 1211 types of extinguishers are hydrostatically tested at the factory test pressure not to exceed two times the service pressure.

(10) The employer shall assure that acceptable self-generating type soda acid and foam extinguishers are tested at 350 psi (2,410 kPa).

(11) Air or gas pressure may not be used for hydrostatic testing.

(12) Extinguisher shells, cylinders, or cartridges which fail a hydrostatic pressure test, or which are not fit for testing shall be removed from service and from the workplace.

(13)(a) The equipment for testing compressed gas type cylinders shall be of the water-jacket type. The equipment shall be provided with an expansion indicator which operates with an accuracy within one percent of the total expansion or 0.1 cc (.1 mL) of liquid.

(b) The equipment for testing noncompressed gas type cylinders shall consist of the following:

(i) A hydrostatic test pump, hand or power operated, capable of producing not less than one hundred fifty percent of the test pressure, which shall include appropriate check valves and fittings;

(ii) A flexible connection for attachment to fittings to test through the extinguisher nozzle, test bonnet, or hose outlet, as is applicable; and

(iii) A protective cage or barrier for personal protection of the tester, designed to provide visual observation of the extinguisher under test.

[Statutory Authority: RCW 49.17.010, [49.17].040, and [49.17].050. 01-11-038, § 296-24-59212, filed 5/9/01, effective 9/1/01.]

WAC 296-24-59215 Appendix A—Portable fire extinguishers. (1) Scope and application. The scope and application of this section is written to apply to three basic types of workplaces. First, there are those workplaces where the employer has chosen to evacuate all employees from the workplace at the time of a fire emergency. Second, there are those workplaces where the employer has chosen to permit certain employees to fight fires and to evacuate all other nonessential employees at the time of a fire emergency. Third, there are those workplaces where the employer has chosen to permit all employees in the workplace to use portable fire extinguishers to fight fires.

The section also addresses two kinds of work areas. The entire workplace can be divided into outside (exterior) work areas and inside (interior) work areas. This division of the workplace into two areas is done in recognition of the different types of hazards employees may be exposed to during firefighting operations. Fires in interior workplaces, pose a greater hazard to employees; they can produce greater exposure to quantities of smoke, toxic gases, and heat because of the capability of a building or structure to contain or entrap these products of combustion until the building can be ventilated. Exterior work areas, normally open to the environment, are somewhat less hazardous, because the products of combustion are generally carried away by the thermal column of the fire. Employees also have a greater selection of evacuation routes if it is necessary to abandon firefighting efforts.

In recognition of the degree of hazard present in the two types of work areas, the standards for exterior work areas are somewhat less restrictive in regards to extinguisher distribution. WAC 296-800-300 explains this by specifying which sections apply.

(2) Portable fire extinguisher exemptions. In recognition of the three options given to employers in regard to the amount of employee evacuation to be carried out, the standards permit certain exemptions based on the number of employees expected to use fire extinguishers.

Where the employer has chosen to totally evacuate the workplace at the time of a fire emergency and when fire extinguishers are not provided, the requirements of this section do not apply to that workplace.

Where the employer has chosen to partially evacuate the workplace or the effected area at the time of a fire emergency and has permitted certain designated employees to remain behind to operate critical plant operations or to fight fires with extinguishers, then the employer is exempt from the distribution requirements of this section. Employees who will be remaining behind to perform incipient firefighting or members of a fire brigade must be trained in their duties. The training must result in the employees becoming familiar with the locations of fire extinguishers. Therefore, the employer must locate the extinguishers in convenient locations where the employees know they can be found. For example, they could be mounted in the fire truck or cart that the fire brigade uses when it responds to a fire emergency. They can also be distributed as set forth in the National Fire Protection Association's Standard No. 10, "Portable Fire Extinguishers."

Where the employer has decided to permit all employees in the workplace to use fire extinguishers, then the entire WISHA standard applies.

(3) Portable fire extinguisher mounting. Previous standards for mounting fire extinguishers have been criticized for requiring specific mounting locations. In recognition of this criticism, the standard has been rewritten to permit as much flexibility in extinguisher mounting as is acceptable to assure that fire extinguishers are available when needed and that employees are not subjected to injury hazards when they try to obtain an extinguisher.

It is the intent of WISHA to permit the mounting of extinguishers in any location that is accessible to employees without the use of portable devices such as a ladder. This limitation is necessary because portable devices can be moved or

taken from the place where they are needed and, therefore, might not be available at the time of an emergency.

Employers are given as much flexibility as possible to assure that employees can obtain extinguishers as fast as possible. For example, an acceptable method of mounting extinguishers in areas where fork lift trucks or tow-motors are used is to mount the units on retractable board which, by means of counterweighting, can be raised above the level where they could be struck by vehicular traffic. When needed, they can be lowered quickly for use. This method of mounting can also reduce vandalism and unauthorized use of extinguishers. The extinguishers may also be mounted as outlined in the National Fire Protection Association's Standard No. 10, "Portable Fire Extinguishers."

(4) Selection and distribution. The employer is responsible for the proper selection and distribution of fire extinguishers and the determination of the necessary degree of protection. The selection and distribution of fire extinguishers must reflect the type and class of fire hazards associated with a particular workplace.

Extinguishers for protecting Class A hazards may be selected from the following types: Water, foam, loaded stream, or multipurpose dry chemical. Extinguishers for protecting Class B hazards may be selected from the following types: Halon 1301, Halon 1211, carbon dioxide, dry chemicals, foam, or loaded stream. Extinguishers for Class C hazards may be selected from the following types: Halon 1301, Halon 1211, carbon dioxide, or dry chemical.

Combustible metal (Class D hazards) fires pose a different type of fire problem in the workplace. Extinguishers using water, gas, or certain dry chemicals cannot extinguish or control this type of fire. Therefore, certain metals have specific dry powder extinguishing agents which can extinguish or control this type of fire. Those agents which have been specifically approved for use on certain metal fires provide the best protection; however, there are also some "universal" type agents which can be used effectively on a variety of combustible metal fires if necessary. The "universal" type agents include: Foundry flux, Lith-X powder, TMB liquid, pyromet powder, TEC powder, dry talc, dry graphite powder, dry sand, dry sodium chloride, dry soda ash, lithium chloride, zirconium silicate, and dry dolomite.

Water is not generally accepted as an effective extinguishing agent for metal fires. When applied to hot burning metal, water will break down into its basic atoms of oxygen and hydrogen. This chemical breakdown contributes to the combustion of the metal. However, water is also a good universal coolant and can be used on some combustible metals, but only under proper conditions and application, to reduce the temperature of the burning metal below the ignition point. For example, automatic deluge systems in magnesium plants can discharge such large quantities of water on burning magnesium that the fire will be extinguished. The National Fire Protection Association has specific standards for this type of automatic sprinkler system. Further information on the control of metal fires with water can be found in the National Fire Protection Association's *Fire Protection Handbook.*

An excellent source of selection and distribution criteria is found in the National Fire Protection Association's Standard No. 10. Other sources of information include the National Safety Council and the employer's fire insurance carrier.

(5) Substitution of standpipe systems for portable fire extinguishers. The employer is permitted to substitute acceptable standpipe systems for portable fire extinguishers under certain circumstances. It is necessary to assure that any substitution will provide the same coverage that portable units provide. This means that fire hoses, because of their limited portability, must be spaced throughout the protected area so that they can reach around obstructions such as columns, machinery, etc., and so that they can reach into closets and other enclosed areas.

(6) Inspection, maintenance and testing. The ultimate responsibility for the inspection, maintenance and testing of portable fire extinguishers lies with the employer. The actual inspection, maintenance, and testing may, however, be conducted by outside contractors with whom the employer has arranged to do the work. When contracting for such work, the employer should assure that the contractor is capable of performing the work that is needed to comply with this standard.

If the employer should elect to perform the inspection, maintenance, and testing requirements of this section in-house, then the employer must make sure that those persons doing the work have been trained to do the work and to recognize problem areas which could cause an extinguisher to be inoperable. The National Fire Protection Association provides excellent guidelines in its standard for portable fire extinguishers. The employer may also check with the manufacturer of the unit that has been purchased and obtain guidelines on inspection, maintenance, and testing. Hydrostatic testing is a process that should be left to contractors or individuals using suitable facilities and having the training necessary to perform the work.

Any time the employer has removed an extinguisher from service to be checked or repaired, alternate equivalent protection must be provided. Alternate equivalent protection could include replacing the extinguisher with one or more units having equivalent or equal ratings, posting a fire watch, restricting the unprotected area from employee exposure, or providing a hose system ready to operate.

(7) Hydrostatic testing. As stated before, the employer may contract for hydrostatic testing. However, if the employer wishes to provide the testing service, certain equipment and facilities must be available. Employees should be made aware of the hazards associated with hydrostatic testing and the importance of using proper guards and water pressures. Severe injury can result if extinguisher shells fail violently under hydrostatic pressure.

Employers are encouraged to use contractors who can perform adequate and reliable service. Firms which have been certified by the Materials Transportation Board (MTB) of the United States Department of Transportation (DOT), or state licensed extinguisher servicing firms, or recognized by the National Association of Fire Equipment Distributors in Chicago, Illinois, are generally acceptable for performing this service.

(8) Training and education. This part of the standard is of the utmost importance to employers and employees if the risk of injury or death due to extinguisher use is to be reduced. If an employer is going to permit an employee to fight a workplace fire of any size, the employer must make sure that the

employee knows everything necessary to assure the employee's safety.

Training and education can be obtained through many channels. Often, local fire departments in larger cities have fire prevention bureaus or similar organizations which can provide basic fire prevention training programs. Fire insurance companies will have data and information available. The National Fire Protection Association and the National Safety Council will provide, at a small cost, publications that can be used in a fire prevention program.

Actual firefighting training can be obtained from various sources in the country. The Texas A and M University, the University of Maryland's Fire and Rescue Institute, West Virginia University's Fire Service Extension, Iowa State University's Fire Service Extension and other state training schools and land grant colleges have firefighting programs directed to industrial applications. Some manufacturers of extinguishers, such as the Ansul Company and Safety First, conduct fire schools for customers in the proper use of extinguishers. Several large corporations have taken time to develop their own on-site training programs which expose employees to the actual "feeling" of firefighting. Simulated fires for training of employees in the proper use of extinguishers are also an acceptable part of a training program.

In meeting the requirements of this section, the employer may also provide educational materials, without classroom instruction, through the use of employee notice campaigns using instruction sheets or flyers or similar types of informal programs. The employer must make sure that employees are trained and educated to recognize not only what type of fire is being fought and how to fight it, but also when it is time to get away from it and leave fire suppression to more experienced firefighters.

[Statutory Authority: RCW 49.17.010, [49.17].040, and [49.17].050. 01-11-038, § 296-24-59215, filed 5/9/01, effective 9/1/01. Statutory Authority: Chapter 49.17 RCW. 94-15-096 (Order 94-07), § 296-24-59215, filed 7/20/94, effective 9/20/94. Statutory Authority: RCW 49.17.040 and 49.17.050. 82-02-003 (Order 81-32), § 296-24-59215, filed 12/24/81.]

WAC 296-24-602 Standpipe and hose systems. This section establishes design and installation criteria for standpipe systems.

[Statutory Authority: RCW 49.17.040 and 49.17.050. 82-02-003 (Order 81-32), § 296-24-602, filed 12/24/81.]

WAC 296-24-60201 Scope and application. (1) Scope. This section applies to all small hose, Class II and Class III standpipe systems installed to meet the requirements of a particular WISHA standard.

(2) Exception. This section does not apply to Class I standpipe systems.

[Statutory Authority: RCW 49.17.040 and 49.17.050. 82-02-003 (Order 81-32), § 296-24-60201, filed 12/24/81.]

WAC 296-24-60203 Protection of standpipes. The employer shall assure that standpipes are located or otherwise protected against mechanical damage. Damaged standpipes shall be repaired promptly.

[Statutory Authority: RCW 49.17.040 and 49.17.050. 82-02-003 (Order 81-32), § 296-24-60203, filed 12/24/81.]

WAC 296-24-60205 Equipment. (1) Reels and cabinets. Where reels or cabinets are provided to contain fire hose, the employer shall assure that they are designed to facilitate prompt use of the hose valves, the hose, and other equipment at the time of a fire or other emergency. The employer shall assure that the reels and cabinets are conspicuously identified and used only for fire equipment.

(2) Hose outlets and connections.

(a) The employer shall assure that hose outlets and connections are located high enough above the floor to avoid being obstructed and to be accessible to employees.

(b) The employer shall standardize screw threads or provide appropriate adapters throughout the system and assure that the hose connections are compatible with those used on the supporting fire equipment.

(3) Hose.

(a) The employer shall assure that every one and one-half inch (3.8 cm) or smaller hose outlet used to meet this standard is equipped with hose connected and ready for use. In extremely cold climates where such installation may result in damaged equipment, the hose may be stored in another location provided it is readily available and can be connected when needed.

(b) Standpipe systems installed after July 1, 1982, for use by employees, shall be equipped with lined hose. Unlined hose may remain in use on existing systems. However, after the effective date of this standard, unlined hose which becomes unserviceable shall be replaced with lined hose.

(c) Employers must provide hose of sufficient length so that friction, resulting from water flowing through the hose, does not decrease the pressure at the nozzle below 30 psi (210 kPa). The dynamic pressure at the nozzle must be within the range of 30 psi (210 kPa) to 125 psi (860 kPa).

(4) Nozzles. Employers must make sure that standpipe hoses are equipped with shut-off type nozzles.

[Statutory Authority: RCW 49.17.010, [49.17].040, [49.17].050. 02-12-098, § 296-24-60205, filed 6/5/02, effective 8/1/02. Statutory Authority: RCW 49.17.040 and 49.17.050. 82-02-003 (Order 81-32), § 296-24-60205, filed 12/24/81.]

WAC 296-24-60207 Water supply. The minimum water supply for standpipe and hose systems, which are provided for the use of employees, shall be sufficient to provide 100 gallons per minute (6.3 l/s) for a period of at least thirty minutes.

[Statutory Authority: RCW 49.17.040 and 49.17.050. 82-02-003 (Order 81-32), § 296-24-60207, filed 12/24/81.]

WAC 296-24-60209 Tests and maintenance. (1) Acceptance tests.

(a) The employer shall assure that the piping of Class II and Class III systems installed after July 1, 1982, including yard piping, is hydrostatically tested for a period of at least two hours at not less than 200 psi (1,380 kPa), or at least 50 psi (340 kPa) in excess of normal pressure when such pressure is greater than 150 psi (1,030 kPa).

(b) The employer shall assure that hose on all standpipe systems installed after July 1, 1982, is hydrostatically tested with couplings in place, at a pressure of not less than 200 psi (1,380 kPa), before it is placed in service. This pressure shall be maintained for at least fifteen seconds and not more than

one minute during which time the hose shall not leak nor shall any jacket thread break during the test.

(2) Maintenance.

(a) The employer shall assure that water supply tanks are kept filled to the proper level except during repairs. When pressure tanks are used, the employer shall assure that proper pressure is maintained at all times except during repairs.

(b) The employer shall assure that valves in the main piping connections to the automatic sources of water supply are kept fully open at all times except during repair.

(c) The employer shall assure that hose systems are inspected at least annually and after each use to assure that all of the equipment and hose are in place, available for use, and in serviceable condition.

(d) When the system or any portion thereof is found not to be serviceable, the employer shall remove it from service immediately and replace it with equivalent protection such as extinguishers and fire watches.

(e) The employer shall assure that hemp or linen hose on existing systems is unracked, physically inspected for deterioration, and reracked using a different fold pattern at least annually. The employer shall assure that defective hose is replaced in accordance with WAC 296-24-60205 (3)(b).

(f) The employer shall designate trained persons to conduct all inspections required under this section.

[Statutory Authority: RCW 49.17.040 and 49.17.050. 82-02-003 (Order 81-32), § 296-24-60209, filed 12/24/81.]

WAC 296-24-60299 Appendix A—Standpipe and hose systems. (1) Scope and application. This section has been written to provide adequate coverage of those standpipe and hose systems that an employer may install in the workplace to meet the requirements of a particular WISHA standard. For example, WISHA permits the substitution of hose systems for portable fire extinguishers in WAC 296-24-592. If an employer chooses to provide hose systems instead of portable Class A fire extinguishers, then those hose systems used for substitution would have to meet the applicable requirements of WAC 296-24-592. All other standpipe and hose systems not used as a substitute would be exempt from these requirements.

The section specifically exempts Class I large hose systems. By large hose systems, WISHA means those two and one-half inch hose lines that are usually associated with fire departments of the size that provide their own water supply through fire apparatus. When the fire gets to the size that outside protection of that degree is necessary, WISHA believes that in most industries employees will have been evacuated from the fire area and the "professional" firefighters will take control.

(2) Protection of standpipes. Employers must make sure that standpipes are protected so that they can be relied upon during a fire emergency. This means protecting the pipes from mechanical and physical damage. There are various means for protecting the equipment such as, but not limited to, enclosing the supply piping in the construction of the building, locating the standpipe in an area which is inaccessible to vehicles, or locating the standpipe in a stairwell.

(3) Hose covers and cabinets. The employer should keep fire protection hose equipment in cabinets or inside protective covers which will protect it from the weather elements, dirt or other damaging sources. The use of protective covers must be easily removed or opened to assure that hose and nozzle are accessible. When the employer places hose in a cabinet, the employer must make sure that the hose and nozzle are accessible to employees without subjecting them to injury. In order to make sure that the equipment is readily accessible, the employer must also make sure that the cabinets used to store equipment are kept free of obstructions and other equipment which may interfere with the fast distribution of the fire hose stored in the cabinet.

(4) Hose outlets and connections. The employer must assure that employees who use standpipe and hose systems can reach the hose rack and hose valve without the use of portable equipment such as ladders. Hose reels are encouraged for use because one employee can retrieve the hose, charge it, and place it into service without much difficulty.

(5) Hose. When the employer elects to provide small hose in lieu of portable fire extinguishers, those hose stations being used for the substitution must have hose attached and ready for service. However, if more than the necessary amount of small hose outlets are provided, hose does not have to be attached to those outlets that would provide redundant coverage. Further, where the installation of hose on outlets may expose the hose to extremely cold climates, the employer may store the hose in houses or similar protective areas and connect it to the outlet when needed.

There is approved lined hose available that can be used to replace unlined hose which is stored on racks in cabinets. The lined hose is constructed so that it can be folded and placed in cabinets in the same manner as unlined hose.

Hose is considered to be unserviceable when it deteriorates to the extent that it can no longer carry water at the required pressure and flow rates. Dry rotted linen or hemp hose, cross threaded couplings, and punctured hose are examples of unserviceable hose.

(6) Nozzles. Variable stream nozzles can provide useful variations in water flow and spray patterns during firefighting operations and they are recommended for employee use. It is recommended that 100 psi nozzle pressure be used to provide good flow patterns for variable stream nozzles. The most desirable attribute for nozzles is the ability of the nozzle person to shut off the water flow at the nozzle when it is necessary. This can be accomplished in many ways. For example, a shut-off nozzle with a lever or rotation of the nozzle to stop flow would be effective, but in other cases a simple globe valve placed between a straight stream nozzle and the hose could serve the same purpose. For straight stream nozzles, 50 psi nozzle pressure is recommended. The intent of the standard is to protect the employee from "run-away" hoses if it becomes necessary to drop a pressurized hose line and retreat from the fire front and other related hazards.

(7) Design and installation. Standpipe and hose systems designed and installed in accordance with NFPA Standard No. 14-1976, "Standpipe and Hose Systems," are considered to be in compliance with this standard.

[Statutory Authority: RCW 49.17.040 and 49.17.050. 82-02-003 (Order 81-32), § 296-24-60299, filed 12/24/81.]

WAC 296-24-607 Automatic sprinkler systems. The design and installation criteria for automatic sprinkler systems is contained in this section.

[Statutory Authority: RCW 49.17.040 and 49.17.050. 82-02-003 (Order 81-32), § 296-24-607, filed 12/24/81.]

WAC 296-24-60701 Scope and application. (1) The requirements of this section apply to all automatic sprinkler systems installed to meet a particular WISHA standard.

(2) For automatic sprinkler systems used to meet WISHA requirements and installed prior to the effective date of this standard, compliance with the National Fire Protection Association (NFPA) or the National Board of Fire Underwriters (NBFU) standard in effect at the time of the system's installation will be acceptable as compliance with this section.

[Statutory Authority: RCW 49.17.040 and 49.17.050. 82-02-003 (Order 81-32), § 296-24-60701, filed 12/24/81.]

WAC 296-24-60703 Exemptions. Automatic sprinkler systems installed in workplaces, but not required by WISHA are exempt from the requirements of this section.

[Statutory Authority: RCW 49.17.040 and 49.17.050. 82-02-003 (Order 81-32), § 296-24-60703, filed 12/24/81.]

WAC 296-24-60705 General requirements. (1) Design.

(a) All automatic sprinkler designs used to comply with this standard shall provide the necessary discharge patterns, densities, and water flow characteristics for complete coverage in a particular workplace or zoned subdivision of the workplace.

(b) The employer shall assure that only approved equipment and devices are used in the design and installation of automatic sprinkler systems used to comply with this standard.

(2) Maintenance. The employer shall properly maintain an automatic sprinkler system installed to comply with this section. The employer shall assure that a main drain flow test is performed on each system annually. The inspector's test valve shall be opened at least every two years to assure that the sprinkler system operates properly.

(3) Acceptance tests. The employer shall conduct proper acceptance tests on sprinkler systems installed for employee protection after July 1, 1982, and record the dates of such tests. Proper acceptance tests include the following:

(a) Flushing of underground connections;

(b) Hydrostatic tests of piping in system;

(c) Air tests in dry-pipe systems;

(d) Dry-pipe valve operation; and

(e) Test of drainage facilities.

(4) Water supplies. The employer shall assure that every automatic sprinkler system is provided with at least one automatic water supply capable of providing design water flow for at least thirty minutes. An auxiliary water supply or equivalent protection shall be provided when the automatic water supply is out of service, except for systems of twenty or fewer sprinklers.

(5) Hose connections for firefighting use. The employer may attach hose connections for firefighting use to wet pipe sprinkler systems provided that the water supply satisfies the combined design demand for sprinklers and standpipes.

(6) Protection of piping. The employer shall assure that automatic sprinkler system piping is protected against freezing and exterior surface corrosions.

(7) Drainage. The employer shall assure that all dry sprinkler pipes and fittings are installed so that the systems may be totally drained.

(8) Sprinklers.

(a) The employer shall assure that only approved sprinklers are used on systems.

(b) The employer may not use older style sprinklers to replace standard sprinklers without a complete engineering review of the altered part of the system.

(c) The employer shall assure that sprinklers are protected from mechanical damage.

(9) Sprinkler alarms. On all sprinkler systems having more than twenty sprinklers, the employer shall assure that a local water-flow alarm is provided which sounds an audible signal on the premises upon water flow through the system equal to the flow from a single sprinkler.

(10) Sprinkler spacing. The employer shall assure that sprinklers are spaced to provide a maximum protection area per sprinkler, a minimum of interference to the discharge pattern by building or structural members or building contents and suitable sensitivity to possible fire hazards. The minimum vertical clearance between sprinklers and material below shall be eighteen inches.

(11) Hydraulically designed systems. The employer shall assure that hydraulically designed automatic sprinkler systems or portions thereof are identified and that the location, number of sprinklers in the hydraulically designed section, and the basis of the design is indicated. Central records may be used in lieu of signs at sprinkler valves provided the records are available for inspection and copying by the director.

[Statutory Authority: RCW 49.17.040 and 49.17.050. 82-02-003 (Order 81-32), § 296-24-60705, filed 12/24/81.]

WAC 296-24-60799 Appendix A—Automatic sprinkler systems. (1) Scope and application. This section contains the minimum requirements for design, installation and maintenance of sprinkler systems that are needed for employee safety. The occupational safety and health administration is aware of the fact that the National Board of Fire Underwriters is no longer an active organization, however, sprinkler systems still exist that were designed and installed in accordance with that organization's standards. Therefore, WISHA will recognize sprinkler systems designed to, and maintained in accordance with, NBFU and earlier NFPA standards.

(2) Exemptions. In an effort to assure that employers will continue to use automatic sprinkler systems as the primary fire protection system in workplaces, WISHA is exempting from coverage those systems not required by a particular WISHA standard and which have been installed in workplaces solely for the purpose of protecting property. Many of these types of systems are installed in areas or buildings with little or no employee exposure. An example is those warehouses where employees may enter occasionally to take inventory or move stock. Some employers may choose to shut down those systems which are not specifically required by WISHA rather than upgrade them to comply with the stan-

dards. WISHA does not intend to regulate such systems. WISHA only intends to regulate those systems which are installed to comply with a particular WISHA standard.

(3) Design. There are two basic types of sprinkler system design. Pipe schedule designed systems are based on pipe schedule tables developed to protect hazards with standard sized pipe, number of sprinklers, and pipe lengths. Hydraulic designed systems are based on an engineered design of pipe size which will produce a given water density or flow rate at any particular point in the system. Either design can be used to comply with this standard.

The National Fire Protection Association's Standard No. 13, "Automatic Sprinkler Systems," contains the tables needed to design and install either type of system. Minimum water supplies, densities, and pipe sizes are given for all types of occupancies.

The employer may check with a reputable fire protection engineering consultant or sprinkler design company when evaluating existing systems or designing a new installation.

With the advent of new construction materials for the manufacture of sprinkler pipe, materials, other than steel, have been approved for use as sprinkler pipe. Selection of pipe material should be made on the basis of the type of installation and the acceptability of the material to local fire and building officials where such systems may serve more than one purpose.

Before new sprinkler systems are placed into service, an acceptance test is to be conducted. The employer should invite the installer, designer, insurance representative, and a local fire official to witness the test. Problems found during the test are to be corrected before the system is placed into service.

(4) Maintenance. It is important that any sprinkler system maintenance be done only when there is minimal employee exposure to the fire hazard. For example, if repairs or changes to the system are to be made, they should be made during those hours when employees are not working or are not occupying that portion of the workplace protected by the portion of the system which has been shut down.

The procedures for performing a flow test via a main drain test or by the use of an inspector's test valve can be obtained from the employer's fire insurance company or from the National Fire Protection Association's Standard No. 13A, "Sprinkler System, Maintenance."

(5) Water supplies. The water supply to a sprinkler system is one of the most important factors an employer should consider when evaluating a system. Obviously, if there is no water supply, the system is useless. Water supplies can be lost for various reasons such as improperly closed valves, excessive demand, broken water mains, and broken fire pumps. The employer must be able to determine if or when this type of condition exists either by performing a main drain test or visual inspection. Another problem may be an inadequate water supply. For example, a light hazard occupancy may, through rehabilitation or change in tenants, become an ordinary or high hazard occupancy. In such cases, the exiting water supply may not be able to provide the pressure or duration necessary for proper protection. Employers must assure that proper design and tests have been made to assure an adequate water supply. These tests can be arranged through the employer's fire insurance carrier or through a local sprinkler maintenance company or through the local fire prevention organization.

Any time the employer must shut down the primary water supply for a sprinkler system, the standard requires that equivalent protection be provided. Equivalent protection may include a fire watch with extinguishers or hose lines in place and manned, or a secondary water supply such as a tank truck and pump, or a tank or fire pond with fire pumps, to protect the areas where the primary water supply is limited or shut down. The employer may also require evacuation of the workplace and have an emergency action plan which specifies such action.

(6) Protection of piping. Piping which is exposed to corrosive atmospheres, either chemical or natural, can become defective to the extent that it is useless. Employers must assure that piping is protected from corrosion by its material of construction, e.g., stainless steel, or by a protective coating, e.g., paint.

(7) Sprinklers. When an employer finds it necessary to replace sprinkler system components or otherwise change a sprinkler's design, employer should make a complete fire protection engineering survey of that part of the system being changed. This review should assure that the changes to the system will not alter the effectiveness of the system as it is presently designed. Water supplies, densities and flow characteristics should be maintained.

(8) Protection of sprinklers. All components of the system must be protected from mechanical impact damage. This can be achieved with the use of mechanical guards or screens or by locating components in areas where physical contact is impossible or limited.

(9) Sprinkler alarms. The most recognized sprinkler alarm is the water-motor gong or bell that sounds when water begins to flow through the system. This is not however, the only type of acceptable water flow alarm. Any alarm that gives an indication that water is flowing through the system is acceptable. For example, a siren, a whistle, a flashing light, or similar alerting device which can transmit a signal to the necessary persons would be acceptable. The purpose of the alarm is to alert persons that the system is operating, and that some type of planned action is necessary.

(10) Sprinkler spacing. For a sprinkler system to be effective there must be an adequate discharge of water spray from the sprinkler head. Any obstructions which hinder the designed density or spray pattern of the water may create unprotected areas which can cause fire to spread. There are some sprinklers that, because of the system's design, are deflected to specific areas. This type of obstruction is acceptable if the system's design takes it into consideration in providing adequate coverage.

[Statutory Authority: RCW 49.17.040 and 49.17.050. 82-02-003 (Order 81-32), § 296-24-60799, filed 12/24/81.]

WAC 296-24-617 Fixed extinguishing systems, general. This section applies to criteria required for fixed extinguisher systems and all sections of this chapter having number WAC 296-24-617 in the section number shall apply.

[Statutory Authority: RCW 49.17.040 and 49.17.050. 82-02-003 (Order 81-32), § 296-24-617, filed 12/24/81.]

WAC 296-24-61701 Scope and application. (1) This section applies to all fixed extinguishing systems installed to meet a particular WISHA standard except for automatic sprinkler systems which are covered by WAC 296-24-607.

(2) This section also applies to fixed systems not installed to meet a particular WISHA standard, but which, by means of their operation, may expose employees to possible injury, death, or adverse health consequences caused by the extinguishing agent. Such systems are only subject to the requirements of WAC 296-24-61703 (4) through (7) and 296-24-61705.

(3) Systems otherwise covered in subsection (2) of this section which are installed in areas with no employee exposure are exempted from the requirements of this section.

[Statutory Authority: RCW 49.17.040 and 49.17.050. 82-02-003 (Order 81-32), § 296-24-61701, filed 12/24/81.]

WAC 296-24-61703 General requirements. (1) Fixed extinguishing system components and agents shall be designed and approved for use on the specific fire hazards they are expected to control or extinguish.

(2) If for any reason a fixed extinguishing system becomes inoperable, the employer shall notify employees and take the necessary temporary precautions to assure their safety until the system is restored to operating order. Any defects or impairments shall be properly corrected by trained personnel.

(3) The employer shall provide a distinctive alarm or signaling system which complies with WAC 296-800-310, and is capable of being perceived above ambient noise or light levels, on all extinguishing systems in those portions of the workplace covered by the extinguishing system to indicate when the extinguishing system is discharging. Discharge alarms are not required on systems where discharge is immediately recognizable.

(4) The employer shall provide effective safeguards to warn employees against entry into discharge areas where the atmosphere remains hazardous to employee safety or health.

(5) The employer shall post hazard warning or caution signs at the entrance to, and inside of, areas protected by fixed extinguishing systems which use agents in concentrations known to be hazardous to employee safety and health.

(6) The employer shall assure that fixed systems are inspected annually by a person knowledgeable in the design and function of the system to assure that the system is maintained in good operating condition.

(7) The employer shall assure that the weight and pressure of refillable containers is checked at least semiannually. If the container shows a loss in net content or weight of more than five percent, or a loss in pressure of more than ten percent, it shall be subjected to maintenance.

(8) The employer shall assure that factory charged nonrefillable containers which have no means of pressure indication are weighed at least semiannually. If a container shows a loss in net weight of more than five percent it shall be replaced.

(9) The employer shall assure that inspection and maintenance dates are recorded on the container, on a tag attached to the container, or in a central location. A record of the last semiannual check shall be maintained until the container is checked again or for the life of the container, whichever is less.

(10) The employer shall train employees designated to inspect, maintain, operate, or repair fixed extinguishing systems and annually review their training to keep them up-to-date in the functions they are to perform.

(11) The employer shall not use chlorobromomethane or carbon tetrachloride as an extinguishing agent where employees may be exposed.

(12) The employer shall assure that systems installed in the presence of corrosive atmospheres are constructed of noncorrosive material or otherwise protected against corrosion.

(13) Automatic detection equipment shall be approved, installed and maintained in accordance with WAC 296-24-629.

(14) The employer shall assure that all systems designed for and installed in areas with climatic extremes shall operate effectively at the expected extreme temperatures.

(15) The employer shall assure that at least one manual station is provided for discharge activation of each fixed extinguishing system.

(16) The employer shall assure that manual operating devices are identified as to the hazard against which they will provide protection.

(17) The employer shall provide and assure the use of the personal protective equipment needed for immediate rescue of employees trapped in hazardous atmospheres created by an agent discharge.

[Statutory Authority: RCW 49.17.010, 49.17.040, 49.17.050, and 49.17.060. 04-07-161, § 296-24-61703, filed 3/23/04, effective 6/1/04. Statutory Authority: RCW 49.17.040 and 49.17.050. 82-02-003 (Order 81-32), § 296-24-61703, filed 12/24/81.]

WAC 296-24-61705 Total flooding systems with potential health and safety hazards to employees. (1) The employer shall provide an emergency action plan in accordance with WAC 296-24-567 for each area within a workplace that is protected by a total flooding system which provides agent concentrations exceeding the maximum safe levels.

(2) Systems installed in areas where employees cannot enter during or after the system's operation are exempt from the requirements of this section.

(3) On all total flooding systems the employer must provide a predischarge employee alarm which will give employees time to safely exit from the discharge area prior to system discharge.

Your predischarge employee alarm systems must:

• Provide enough warning to allow employees to safely escape from the workplace or the immediate work area or both;

• Be capable of being perceived above ambient noise or light levels by all employees in the affected portions of the workplace before system discharge;

• Be distinctive and recognizable as a signal to evacuate the work area;

• Be kept in operating condition except when undergoing repairs or maintenance.

You must explain to each employee how to report emergencies in your workplace. Methods of reporting emergen-

cies include manual pull box alarms, public address systems, radio, or telephones. Post emergency telephone numbers near telephones, or employee notice boards, or other conspicuous locations if you use telephones to report emergencies.

If you use a communication system that also serves as an employee alarm system, all emergency messages must have priority over all nonemergency messages.

(4) The employer shall provide automatic actuation of total flooding systems by means of an approved fire detection device installed and interconnected with a predischarge employee alarm system to give employees time to safely exit from the discharge area prior to system discharge.

[Statutory Authority: RCW 49.17.010, [49.17].040, and [49.17].050. 01-11-038, § 296-24-61705, filed 5/9/01, effective 9/1/01. Statutory Authority: RCW 49.17.040 and 49.17.050. 82-02-003 (Order 81-32), § 296-24-61705, filed 12/24/81.]

WAC 296-24-61799 Appendix A—Fixed extinguishing systems, general. (1) Scope and application. This section contains the general requirements that are applicable to all fixed extinguishing systems installed to meet WISHA standards. It also applies to those fixed extinguishing systems, generally total flooding, which are not required by WISHA, but which, because of the agent's discharge, may expose employees to hazardous concentrations of extinguishing agents or combustion by-products. Employees who work around fixed extinguishing systems must be warned of the possible hazards associated with the system and its agent. For example, fixed dry chemical extinguishing systems may generate a large enough cloud of dry chemical particles that employees may become visually disoriented. Certain gaseous agents can expose employees to hazardous by-products of combustion when the agent comes into contact with hot metal or other hot surface. Some gaseous agents may be present in hazardous concentrations when the system has totally discharged because an extra rich concentration is necessary to extinguish deep-seated fires. Certain local application systems may be designed to discharge onto the flaming surface of a liquid, and it is possible that the liquid can splatter when hit with the discharging agent. All of these hazards must be determined before the system is placed into operation, and must be discussed with employees.

Based on the known toxicological effects of agents such as carbon tetrachloride and chlorobromomethane, WISHA is not permitting the use of these agents in areas where employees can be exposed to the agent or its side effects. However, chlorobromomethane has been accepted and may be used as an explosion suppression agent in unoccupied spaces. WISHA is permitting the use of this agent only in areas where employees will not be exposed.

(2) Distinctive alarm signals. A distinctive alarm signal is required to indicate that a fixed system is discharging. Such a signal is necessary on those systems where it is not immediately apparent that the system is discharging. For example, certain gaseous agents make a loud noise when they discharge. In this case, no alarm signal is necessary. However, where systems are located in remote locations or away from the general work area and where it is possible that a system could discharge without anyone knowing that it is doing so, then a distinctive alarm is necessary to warn employees of the hazards that may exist. The alarm can be a bell, gong, whistle, horn, flashing light, or any combination of signals as long as it is identifiable as a discharge alarm.

(3) Maintenance. The employer is responsible for the maintenance of all fixed systems, but this responsibility does not preclude the use of outside contractors to do such work. New systems should be subjected to an acceptance test before placed in service. The employer should invite the installer, designer, insurance representative and others to witness the test. Problems found during the test need to be corrected before the system is considered operational.

(4) Manual discharge stations. There are instances, such as for mechanical reasons and others, where the standards call for a manual backup activation device. While the location of this device is not specified in the standard, the employer should assume that the device should be located where employees can easily reach it. It could, for example, be located along the main means of egress from the protected area so that employees could activate the system as they evacuate the work area.

(5) Personal protective equipment. The employer is required to provide the necessary personal protective equipment to rescue employees who may be trapped in a totally flooded environment which may be hazardous to their health. The equipment would normally include a positive-pressure self-contained breathing apparatus and any necessary first-aid equipment. In cases where the employer can assure the prompt arrival of the local fire department or plant emergency personnel which can provide the equipment, this can be considered as complying with the standards.

[Statutory Authority: RCW 49.17.040 and 49.17.050. 82-02-003 (Order 81-32), § 296-24-61799, filed 12/24/81.]

WAC 296-24-622 Fixed extinguishing systems, dry chemical. The design and installation requirements specifically applicable to fixed extinguishing systems, using dry chemical as the extinguishing agent, are contained in this section.

[Statutory Authority: RCW 49.17.040 and 49.17.050. 82-02-003 (Order 81-32), § 296-24-622, filed 12/24/81.]

WAC 296-24-62201 Scope and application. This section applies to all fixed extinguishing systems using dry chemical as the extinguishing agent, installed to meet a particular WISHA standard. These systems shall also comply with WAC 296-24-617.

[Statutory Authority: RCW 49.17.040 and 49.17.050. 82-02-003 (Order 81-32), § 296-24-62201, filed 12/24/81.]

WAC 296-24-62203 Specific requirements. (1) The employer shall assure that dry chemical agents are compatible with any foams or wetting agents with which they are used.

(2) The employer may not mix together dry chemical extinguishing agents of different compositions. The employer shall assure that dry chemical systems are refilled with the chemical stated on the approval nameplate or an equivalent compatible material.

(3) When dry chemical discharge may obscure vision, the employer must provide a predischarge employee alarm

which will give employees time to safely exit from the discharge area prior to system discharge.

Your predischarge employee alarm systems must:

• Provide enough warning to allow employees to safely escape from the workplace or the immediate work area or both.

• Be capable of being perceived above ambient noise or light levels by all employees in the affected portions of the workplace before system discharge.

• Be distinctive and recognizable as a signal to evacuate the work area.

• Be kept in operating condition except when undergoing repairs or maintenance.

You must explain to each employee how to report emergencies in your workplace. Methods of reporting emergencies include manual pull box alarms, public address systems, radio, or telephones. Post emergency telephone numbers near telephones, or employee notice boards, or other conspicuous locations if you use telephones to report emergencies.

If you use a communication system that also serves as an employee alarm system, all emergency messages must have priority over all nonemergency messages.

(4) The employer shall sample the dry chemical supply of all but stored pressure systems at least annually to assure that the dry chemical supply is free of moisture which may cause the supply to cake or form lumps.

(5) The employer shall assure that the rate of application of dry chemicals is such that the designed concentration of the system will be reached within thirty seconds of initial discharge.

[Statutory Authority: RCW 49.17.010, [49.17].040, and [49.17].050. 01-11-038, § 296-24-62203, filed 5/9/01, effective 9/1/01. Statutory Authority: RCW 49.17.040 and 49.17.050. 82-02-003 (Order 81-32), § 296-24-62203, filed 12/24/81.]

WAC 296-24-62299 Appendix A—Fixed extinguishing systems, dry chemical. (1) Scope and application. The requirements of this section apply only to dry chemical systems. These requirements are to be used in conjunction with the requirements of WAC 296-24-617.

(2) Maintenance. The employer is responsible for assuring that dry chemical systems will operate effectively. To do this, periodic maintenance is necessary. One test that must be conducted during the maintenance check is one which will determine if the agent has remained free of moisture. If an agent absorbs any moisture, it may tend to cake and thereby clog the system. An easy test for acceptable moisture content is to take a lump of dry chemical from the container and drop it from a height of four inches. If the lump crumbles into fine particles, the agent is acceptable.

[Statutory Authority: RCW 49.17.040 and 49.17.050. 82-02-003 (Order 81-32), § 296-24-62299, filed 12/24/81.]

WAC 296-24-623 Fixed extinguishing systems, gaseous agent. This section contains the design and installation requirements for fixed extinguishing systems using gaseous agents.

[Statutory Authority: RCW 49.17.040 and 49.17.050. 82-02-003 (Order 81-32), § 296-24-623, filed 12/24/81.]

WAC 296-24-62301 Scope and application. (1) Scope. This section applies to all fixed extinguishing systems, using a gas as the extinguishing agent, installed to meet a particular WISHA standard. These systems shall also comply with WAC 296-24-617. In some cases, the gas may be in a liquid state during storage.

(2) Application. The requirements of WAC 296-24-61703 (2) and (4) through (7) shall apply only to total flooding systems.

[Statutory Authority: RCW 49.17.040 and 49.17.050. 82-02-003 (Order 81-32), § 296-24-62301, filed 12/24/81.]

WAC 296-24-62303 Specific requirements. (1) Agents used for initial supply and replenishment shall be of the type approved for the system's application. Carbon dioxide obtained by dry ice conversion to liquid is not acceptable unless it is processed to remove excess water and oil.

(2) Except during overhaul, the employer shall assure that the designed concentration of gaseous agents is maintained until the fire has been extinguished or is under control.

(3) The employer shall assure that employees are not exposed to toxic levels of gaseous agent or its decomposition products.

(4) The employer shall assure that the designed extinguishing concentration is reached within thirty seconds of initial discharge except for Halon systems which must achieve design concentration within ten seconds.

(5) The employer shall provide a distinctive predischarge employee alarm capable of being perceived above ambient light or noise levels when agent design concentrations exceed the maximum safe level for employee exposure. A predischarge employee alarm for alerting employees before system discharge shall be provided on Halon 1211 and carbon dioxide systems with a design concentration of four percent or greater, and for Halon 1301 systems with a design concentration of ten percent or greater. The predischarge employee alarm shall provide employees time to safely exit the discharge area prior to system discharge.

(6)(a) Where egress from an area cannot be accomplished within one minute, the employer shall not use Halon 1301 in concentrations greater than seven percent.

(b) Where egress takes greater than thirty seconds but less than one minute, the employer shall not use Halon 1301 in a concentration greater than ten percent.

(c) Halon 1301 concentrations greater than ten percent are only permitted in areas not normally occupied by employees provided that any employee in the area can escape within thirty seconds. The employer shall assure that no unprotected employees enter the area during agent discharge.

[Statutory Authority: RCW 49.17.040 and 49.17.050. 82-02-003 (Order 81-32), § 296-24-62303, filed 12/24/81.]

WAC 296-24-62399 Appendix A—Fixed extinguishing systems, gaseous agent. (1) Scope and application. This section applies only to those systems which use gaseous agents. The requirements of WAC 296-24-617 also apply to the gaseous agent systems covered in this section.

(2) Design concentrations. Total flooding gaseous systems are based on the volume of gas which must be discharged in order to produce a certain designed concentration of gas in an enclosed area. The concentration needed to extin-

guish a fire depends on several factors including the type of fire hazard and the amount of gas expected to leak away from the area during discharge. At times it is necessary to "supersaturate" a work area to provide for expected leakage from the enclosed area. In such cases, employers must assure that the flooded area has been ventilated before employees are permitted to reenter the work area without protective clothing and respirators.

(3) Toxic decomposition. Certain halogenated hydrocarbons will break down or decompose when they are combined with high temperatures found in the fire environment. The products of the decomposition can include toxic elements or compounds. For example, when Halon 1211 is placed into contact with hot metal it will break down and form bromide or fluoride fumes. The employer must find out which toxic products may result from decomposition of a particular agent from the manufacturer, and take the necessary precautions to prevent employee exposure to the hazard.

[Statutory Authority: RCW 49.17.040 and 49.17.050. 82-02-003 (Order 81-32), § 296-24-62399, filed 12/24/81.]

WAC 296-24-627 Fixed extinguishing systems, water spray and foam. This section contains the design and installation requirements for extinguishing systems using water or foam solution as the extinguishing agent.

[Statutory Authority: RCW 49.17.040 and 49.17.050. 82-02-003 (Order 81-32), § 296-24-627, filed 12/24/81.]

WAC 296-24-62701 Scope and application. This section applies to all fixed extinguishing systems, using water or foam solution as the extinguishing agent, installed to meet a particular WISHA standard. These systems shall also comply with WAC 296-24-617. This section does not apply to automatic sprinkler systems which are covered under WAC 296-24-607.

[Statutory Authority: RCW 49.17.040 and 49.17.050. 82-02-003 (Order 81-32), § 296-24-62701, filed 12/24/81.]

WAC 296-24-62703 Specific requirements. (1) The employer shall assure that foam and water spray systems are designed to be effective in at least controlling fire in the protected area or on protected equipment.

(2) The employer shall assure that drainage of water spray systems is directed away from areas where employees are working and that no emergency egress is permitted through the drainage path.

[Statutory Authority: RCW 49.17.040 and 49.17.050. 82-02-003 (Order 81-32), § 296-24-62703, filed 12/24/81.]

WAC 296-24-62799 Appendix A—Fixed extinguishing systems, water spray and foam. (1) Scope and application. This section applies to those systems that use water spray or foam. The requirements of WAC 296-24-617 also apply to this type of system.

(2) Characteristics of foams. When selecting the type of foam for a specific hazard, the employer should consider the following limitations of some foams.

(a) Some foams are not acceptable for use on fires involving flammable gases and liquefied gases with boiling points below ambient workplace temperatures. Other foams are not effective when used on fires involving polar solvent liquids.

(b) Any agent using water as part of the mixture should not be used on fire involving combustible metals unless it is applied under proper conditions to reduce the temperature of burning metal below the ignition temperature. The employer should use only those foams that have been tested and accepted for this application by a recognized independent testing laboratory.

(c) Certain types of foams may be incompatible and break down when they are mixed together.

(d) For fires involving water miscible solvents, employers should use only those foams tested and approved for such use. Regular protein foams may not be effective on such solvents.

Whenever employers provide a foam or water spray system, drainage facilities must be provided to carry contaminated water or foam overflow away from the employee work area and egress routes. This drainage system should drain to a central impounding area where it can be collected and disposed of properly. Other government agencies may have regulations concerning environmental considerations.

[Statutory Authority: RCW 49.17.040 and 49.17.050. 82-02-003 (Order 81-32), § 296-24-62799, filed 12/24/81.]

WAC 296-24-629 Fire detection systems. The requirements for installation, restoration, maintenance, testing and protection of fire detection systems and the criteria for response time can be found in this section.

[Statutory Authority: RCW 49.17.040 and 49.17.050. 82-02-003 (Order 81-32), § 296-24-629, filed 12/24/81.]

WAC 296-24-62901 Scope and application. This section applies to all automatic fire detection systems installed to meet the requirements of a particular WISHA standard.

[Statutory Authority: RCW 49.17.040 and 49.17.050. 82-02-003 (Order 81-32), § 296-24-62901, filed 12/24/81.]

WAC 296-24-62903 Installation and restoration. (1) The employer shall assure that all devices and equipment constructed and installed to comply with this standard are approved for the purpose for which they are intended.

(2) The employer shall restore all fire detection systems and components to normal operating condition as promptly as possible after each test or alarm. Spare detection devices and components which are normally destroyed in the process of detecting fires shall be available on the premises or from a local supplier in sufficient quantities and locations for prompt restoration of the system.

[Statutory Authority: RCW 49.17.040 and 49.17.050. 82-02-003 (Order 81-32), § 296-24-62903, filed 12/24/81.]

WAC 296-24-62905 Maintenance and testing. (1) The employer shall maintain all systems in an operable condition except during repairs or maintenance.

(2) The employer shall assure that fire detectors and fire detection systems are tested and adjusted as often as needed to maintain proper reliability and operating condition except that factory calibrated detectors need not be adjusted after installation.

(3) The employer shall assure that pneumatic and hydraulic operated detection systems installed after July 1, 1982, are equipped with supervised systems.

(4) The employer shall assure that the servicing, maintenance and testing of fire detection systems, including cleaning and necessary sensitivity adjustments are performed by a trained person knowledgeable in the operations and functions of the system.

(5) The employer shall also assure that fire detectors that need to be cleaned of dirt, dust, or other particulates in order to be fully operational are cleaned at regular periodic intervals.

[Statutory Authority: RCW 49.17.040 and 49.17.050. 82-02-003 (Order 81-32), § 296-24-62905, filed 12/24/81.]

WAC 296-24-62907 Protection of fire detectors. (1) The employer shall assure that fire detection equipment installed outdoors or in the presence of corrosive atmospheres be protected from corrosion. The employer shall provide a canopy, hood, or other suitable protection for detection equipment requiring protection from the weather.

(2) The employer shall locate or otherwise protect detection equipment so that it is protected from mechanical or physical impact which might render it inoperable.

(3) The employer shall assure that detectors are supported independently of their attachment to wires or tubing.

[Statutory Authority: RCW 49.17.040 and 49.17.050. 82-02-003 (Order 81-32), § 296-24-62907, filed 12/24/81.]

WAC 296-24-62909 Response time. (1) The employer shall assure that fire detection systems installed for the purpose of actuating fire extinguishment or suppression systems shall be designed to operate in time to control or extinguish a fire.

(2) The employer shall assure that fire detection systems installed for the purpose of employee alarm and evacuation be designed and installed to provide a warning for emergency action and safe escape of employees.

(3) The employer shall not delay alarms or devices initiated by fire detector actuation for more than thirty seconds unless such delay is necessary for the immediate safety of employees. When such delay is necessary, it shall be addressed in an emergency action plan meeting the requirements of WAC 296-24-567.

[Statutory Authority: RCW 49.17.040 and 49.17.050. 82-02-003 (Order 81-32), § 296-24-62909, filed 12/24/81.]

WAC 296-24-62911 Number, location and spacing of detecting devices. The employer shall assure that the number, spacing and location of fire detectors is based upon design data obtained from field experience, or tests, engineering surveys, the manufacturer's recommendations, or a recognized testing laboratory listing.

[Statutory Authority: RCW 49.17.040 and 49.17.050. 82-02-003 (Order 81-32), § 296-24-62911, filed 12/24/81.]

WAC 296-24-62999 Appendix A—Fire detection systems. (1) Installation and restoration. Fire detection systems must be designed by knowledgeable engineers or other professionals, with expertise in fire detection systems and when the systems are installed, there should be an acceptance test performed on the system to insure it operates properly. The manufacturer's recommendations for system design should be consulted. While entire systems may not be approved, each component used in the system is required to be approved. Custom fire detection systems should be designed by knowledgeable fire protection or electrical engineers who are familiar with the workplace hazards and conditions. Some systems may only have one or two individual detectors for a small workplace, but good design and installation is still important. An acceptance test should be performed on all systems, including these smaller systems.

WISHA has a requirement that spare components used to replace those which may be destroyed during an alarm situation be available in sufficient quantities and locations for prompt restoration of the system. This does not mean that the parts or components have to be stored at the workplace. If the employer can assure that the supply of parts is available in the local community or the general metropolitan area of the workplace, then the requirements for storage and availability have been met. The intent is to make sure that the alarm system is fully operational when employees are occupying the workplace, and that when the system operates it can be returned to full service the next day or sooner.

(2) Supervision. Fire detection systems should be supervised. The object of supervision is detection of any failure of the circuitry, and the employer should use any method that will assure that the system's circuits are operational. Electrically operated sensors for air pressure, fluid pressure, or electrical circuits, can provide effective monitoring and are the typical types of supervision.

(3) Protection of fire detectors. Fire detectors must be protected from corrosion either by protective coating, by being manufactured from noncorrosive materials or by location. Detectors must also be protected from mechanical impact damage, either by suitable cages or metal guards where such hazards are present, or by locating them above or out of contact with materials or equipment which may cause damage.

(4) Number, location, and spacing of detectors. This information can be obtained from the approval listing for detectors or NFPA standards. It can also be obtained from fire protection engineers or consultants or manufacturers of equipment who have access to approval listing and design methods.

[Statutory Authority: RCW 49.17.040 and 49.17.050. 82-02-003 (Order 81-32), § 296-24-62999, filed 12/24/81.]

WAC 296-24-63299 Appendix B—National consensus standards. The following table contains a cross-reference listing of those current national consensus standards which contains information and guidelines that would be considered acceptable in complying with requirements in the specific sections.

Section	National Consensus Standard
WAC 296-24-58505 . .	ANSI/NFPA No. 1972, Structural Firefighter's Helmets. ANSI Z88.5 American National Standard, Practice for Respirator Protection for the Fire Service. ANSI/NFPA No. 1971, Protective Clothing for Structural Firefighters. NFPA No. 1041, Fire Service Instructor Professional Qualifications.
WAC 296-24-592 . .	ANSI/NFPA No. 10, Portable Fire Extinguishers.
WAC 296-24-602 . .	ANSI/NFPA No. 18, Wetting Agents. ANSI/NFPA No. 20, Centrifugal Fire Pumps. NFPA No. 21, Steam Fire Pumps. ANSI/NFPA No. 22, Water Tanks. NFPA No. 24, Outside Protection. NFPA No. 26, Supervision of Valves. NFPA No. 13E, Fire Department Operations in Properties Protected by Sprinkler, Standpipe Systems. ANSI/NFPA No. 194, Fire Hose Connections. NFPA No. 197, Initial Fire Attack, Training for. NFPA No. 1231, Water Supplies for Suburban and Rural Firefighting.
WAC 296-24-607 . .	ANSI/NFPA No. 13, Sprinkler Systems. NFPA No. 13A, Sprinkler Systems, Maintenance. ANSI/NFPA No. 18, Wetting Agents. ANSI/NFPA No. 20, Centrifugal Fire Pumps. ANSI/NFPA No. 22, Water Tanks. NFPA No. 24, Outside Protection. NFPA No. 26, Supervision of Valves. ANSI/NFPA No. 72B, Auxiliary Signaling Systems. NFPA No. 1231, Water Supplies for Suburban and Rural Firefighting.
WAC 296-24-617 . .	ANSI/NFPA No. 11, Foam Systems. ANSI/NFPA No. 11A, High Expansion Foam Extinguishing Systems. ANSI/NFPA No. 11B, Synthetic Foam and Combined Agent Systems. ANSI/NFPA No. 12, Carbon Dioxide Systems. ANSI/NFPA No. 12A, Halon 1301 Systems. ANSI/NFPA No. 12B, Halon 1211 Systems. ANSI/NFPA No. 15, Water Spray Systems. ANSI/NFPA No. 16, Foam-Water Spray Systems. ANSI/NFPA No. 17, Dry Chemical Systems. ANSI/NFPA No. 69, Explosion Suppression Systems.
WAC 296-24-622 . .	ANSI/NFPA No. 11B, Synthetic Foam and Combined Agent Systems. ANSI/NFPA No. 17, Dry Chemical Systems.
WAC 296-24-623 . .	ANSI/NFPA No. 12, Carbon Dioxide Systems. ANSI/NFPA No. 12A, Halon 1211 Systems. ANSI/NFPA No. 12B, Halon 1301 Systems. ANSI/NFPA No. 69, Explosion Suppression Systems.
WAC 296-24-627 . .	ANSI/NFPA No. 11, Foam Extinguishing Systems. ANSI/NFPA No. 11A, High Expansion Foam Extinguishing Systems. ANSI/NFPA No. 11B, Synthetic Foam and Combined Agent Systems. ANSI/NFPA No. 15, Water Spray Fixed Systems. ANSI/NFPA No. 16, Foam-Water Spray Systems. ANSI/NFPA No. 18, Wetting Agents. NFPA No. 26, Supervision of Valves.
WAC 296-24-629 . .	ANSI/NFPA No. 71, Central Station Signaling Systems. ANSI/NFPA No. 72A, Local Protective Signaling Systems. ANSI/NFPA No. 72B, Auxiliary Signaling Systems. ANSI/NFPA No. 72D, Proprietary Protective Signaling Systems. ANSI/NFPA No. 72E, Automatic Fire Detectors. ANSI/NFPA No. 101, Life Safety Code.
WAC 296-24-631 . .	ANSI/NFPA No. 71, Central Station Signaling Systems. ANSI/NFPA No. 72A, Local Protective Signaling Systems. ANSI/NFPA No. 72B, Auxiliary Protective Signaling Systems. ANSI/NFPA No. 72C, Remote Station Protective Signaling Systems. ANSI/NFPA No. 72D, Proprietary Protective Signaling Systems. ANSI/NFPA No. 101, Life Safety Code.
Metric Conversion . .	ANSI/ASTM NSo. E380, American National Standard for Metric Practice.

NFPA standards are available from the National Fire Protection Association; Batterymarch Park, Quincy, MA 02269-9101.

ANSI Standards are available from the American National Standards Institute; 11 West 42nd Street; New York, NY 10036.

[Statutory Authority: Chapter 49.17 RCW. 94-15-096 (Order 94-07), § 296-24-63299, filed 7/20/94, effective 9/20/94. Statutory Authority: RCW 49.17.040 and 49.17.050. 82-02-003 (Order 81-32), § 296-24-63299, filed 12/24/81.]

WAC 296-24-63399 Appendix C—Fire protection references for further information. (1) Appendix general references. The following references provide information which can be helpful in understanding the requirements contained in all of the sections of Part G:

(a) Fire Protection Handbook, National Fire Protection Association, Batterymarch Park, Quincy, MA 02269-9101.

(b) Accident Prevention Manual for Industrial Operations, National Safety Council, 444 North Michigan Avenue, Chicago, IL 60611.

(c) Various associations also publish information which may be useful in understanding these standards. Examples of these associations are: Fire Equipment Manufacturers Association (FEMA) of Cleveland, OH 44115-2851, and the National Association of Fire Equipment Distributors (NAFED) of Chicago, IL 60611-4267.

(2) Appendix references applicable to individual sections. The following references are grouped according to individual sections contained in Part G. These references provide information which may be helpful in understanding and implementing the standards of each section of Part G.

(a) WAC 296-24-58505 - Fire brigades:

(i) Private Fire Brigades, NFPA 27; National Fire Protection Association, Batterymarch Park, Quincy, MA 02269-9101.

(ii) Initial Fire Attack, Training Standard On, NFPA 197; National Fire Protection Association, Batterymarch Park, Quincy, MA 02269-9101.

(iii) Firefighter Professional Qualifications, NFPA 1001; National Fire Protection Association, Batterymarch Park, Quincy, MA 02269-9101.

(iv) Organization for Fire Services, NFPA 1201; National Fire Protection Association, Batterymarch Park, Quincy, MA 02269-9101.

(v) Organization of a Fire Department, NFPA 1202; National Fire Protection Association, Batterymarch Park, Quincy, MA 02269-9101.

(vi) Protective Clothing for Structural Firefighting, ANSI/NFPA 1971; National Fire Protection Association, Batterymarch Park, Quincy, MA 02269-9101.

(vii) American National Standards Institute for Men's Safety-Toe Footwear, ANSI Z41.1; American National Standards Institute, New York, NY 10036.

(viii) American National Standards Institute for Occupational and Educational Eye and Face Protection, ANSI Z87.1; American National Standards Institute, New York, NY 10036.

(ix) American National Standards Institute, Safety Requirements for Industrial Head Protection, ANSI Z89.1; American National Standards Institute, New York, NY 10036.

(x) Specifications for Protective Headgear for Vehicular Users, ANSI Z90.1; American National Standards Institute, New York, NY 10036.

(xi) Testing Physical Fitness; Davis and Santa Maria, Fire Command, April 1975.

(xii) Development of a Job-Related Physical Performance Examination for Firefighters; Dotson and Others. A summary report for the National Fire Prevention and Control Administration, Washington, D.C., March 1977.

(xiii) Proposed Sample Standards for Firefighters' Protective Clothing and Equipment; International Association of Firefighters, Washington, D.C. 20006-5395.

(xiv) A Study of Facepiece Leakage of Self-Contained Breathing Apparatus by DOP Man Tests; Los Alamos National Laboratory, Los Alamos, N.M.

(xv) The Development of Criteria for Firefighters' Gloves; Vol. II: Glove Criteria and Test Methods; National Institute for Occupational Safety and Health, Cincinnati, Ohio, 1976.

(xvi) Model Performance Criteria for Structural Firefighters' Helmets; National Fire Prevention and Control Administration, Washington, D.C., 1977.

(xvii) Firefighters; Job Safety and Health Magazine, Occupational Safety and Health Administration, Washington, D.C., June 1978.

(xviii) Eating Smoke—The Dispensable Diet; Utech, H.P. The Fire Independent, 1975.

(xix) Project Monoxide—A Medical Study of an Occupational Hazard of Firefighters; International Association of Firefighters, Washington, D.C. 20006-5395.

(xx) Occupational Exposures to Carbon Monoxide in Baltimore Firefighters; Radford Baltimore, MD. Journal of Occupational Medicine, September, 1976.

(xxi) Fire Brigades; National Safety Council, Chicago, IL 60611, 1966.

(xxii) American National Standards Institute, Practice for Respiratory Protection for the Fire Service, ANSI Z88.5; American National Standards Institute, New York, NY 10036.

(xxiii) Respirator Studies for the Nuclear Regulatory Commission; October 1, 1977—September 30, 1978. Evaluation and Performance of Open-Circuit Breathing Apparatus. NUREG/CR-1235. Los Alamos National Laboratory; Los Alamos, NM 87545, January, 1980.

(b) WAC 296-24-592 - Portable fire extinguishers:

(i) Standard for Portable Fire Extinguishers, ANSI/NFPA 10; National Fire Protection Association, Batterymarch Park, Quincy, MA 02269.

(ii) Methods for Hydrostatic Testing of Compressed-Gas Cylinders, C-1; Compressed Gas Association, 1725 Jefferson Davis Highway, Arlington, VA 22202-4100.

(iii) Recommendations for the Disposition of Unserviceable Compressed-Gas Cylinders, C-2; Compressed Gas Association, 1725 Jefferson Davis Highway, Arlington, VA 22202-4100.

(iv) Standard for Visual Inspection of Compressed-Gas Cylinders, C-6; Compressed Gas Association, 1725 Jefferson Davis Highway, Arlington, VA 22202-4100.

(v) Portable Fire Extinguisher Selection Guide, National Association of Fire Equipment Distributors, 401 North Michigan Avenue Chicago, IL 60611-4267.

(c) WAC 296-24-602 - Standpipe and hose systems:

(i) Standard for the Installation of Sprinkler Systems, ANSI/NFPA 13; National Fire Protection Association, Batterymarch Park, Quincy, MA 02269-9101.

(ii) Standard of the Installation of Standpipe and Hose Systems, ANSI/NFPA 14; National Fire Protection Association, Batterymarch Park, Quincy, MA 02269-9101.

(iii) Standard for the Installation of Centrifugal Fire Pumps, ANSI/NFPA 20; National Fire Protection Association, Batterymarch Park, Quincy, MA 02269-9101.

(iv) Standard for Water Tanks for Private Fire Protection, ANSI/NFPA 22; National Fire Protection Association, Batterymarch Park, Quincy, MA 02269-9101.

(v) Standard for Screw Threads and Gaskets for Fire Hose Connections, ANSI/NFPA 194; National Fire Protection Association, Batterymarch Park, Quincy, MA 02269-9101.

(vi) Standard for Fire Hose, NFPA 196; National Fire Protection Association, Batterymarch Park, Quincy, MA 02269-9101.

(vii) Standard for the Care of Fire Hose, NFPA 198; National Fire Protection Association, Batterymarch Park, Quincy, MA 02269-9101.

(d) WAC 296-24-607 - Automatic sprinkler systems:

(i) Standard of the Installation of Sprinkler Systems, ANSI/NFPA 13; National Fire Protection Association, Batterymarch Park, Quincy, MA 02269-9101.

(ii) Standard for the Care and Maintenance of Sprinkler Systems, ANSI/NFPA 13A; National Fire Protection Association, Batterymarch Park, Quincy, MA 02269-9101.

(iii) Standard for the Installation of Standpipe and Hose Systems, ANSI/NFPA 14; National Fire Protection Association, Batterymarch Park, Quincy, MA 02269-9101.

(iv) Standard for the Installation of Centrifugal Fire Pumps, ANSI/NFPA 20; National Fire Protection Association, Batterymarch Park, Quincy, MA 02269-9101.

(v) Standard for Water Tanks for Private Fire Protection, ANSI/NFPA 22; National Fire Protection Association, Batterymarch Park, Quincy, MA 02269-9101.

(vi) Standard for Indoor General Storage, ANSI/NFPA 231; National Fire Protection Association, Batterymarch Park, Quincy, MA 02269-9101.

(vii) Standard for Rack Storage of Materials, ANSI/NFPA 231C; National Fire Protection Association, Batterymarch Park, Quincy, MA 02269-9101.

(e) WAC 296-24-617 - Fixed extinguishing systems, general information:

(i) Standard for Foam Extinguishing Systems, ANSI/NFPA 11; National Fire Protection Association, Batterymarch Park, Quincy, MA 02269-9101.

(ii) Standard for Hi-Expansion Foam Systems, ANSI/NFPA 11A; National Fire Protection Association, Batterymarch Park, Quincy, MA 02269-9101.

(iii) Standard on Synthetic Foam and Combined Agent Systems, ANSI/NFPA 11B; National Fire Protection Association, Batterymarch Park, Quincy, MA 02269-9101.

(iv) Standard on Carbon Dioxide Extinguishing Systems, ANSI/NFPA 12; National Fire Protection Association, Batterymarch Park, Quincy, MA 02269-9101.

(v) Standard on Halon 1301, ANSI/NFPA 12A; National Fire Protection Association, Batterymarch Park, Quincy, MA 02269-9101.

(vi) Standard on Halon 1211, ANSI/NFPA 12B; National Fire Protection Association, Batterymarch Park, Quincy, MA 02269-9101.

(vii) Standard for Water Spray Systems, ANSI/NFPA 15; National Fire Protection Association, Batterymarch Park, Quincy, MA 02269-9101.

(viii) Standard for Foam-Water Sprinkler Systems and Foam-Water Spray Systems, ANSI/NFPA 16; National Fire Protection Association, Batterymarch Park, Quincy, MA 02269-9101.

(ix) Standard for Dry Chemical Extinguishing Systems, ANSI/NFPA 17; National Fire Protection Association, Batterymarch Park, Quincy, MA 02269-9101.

(f) WAC 296-24-622 - Fixed extinguishing systems, dry chemical:

(i) Standard for Dry Chemical Extinguishing Systems, ANSI/NFPA 17; National Fire Protection Association, Batterymarch Park, Quincy, MA 02269-9101.

(ii) National Electrical Code, ANSI/NFPA 70; National Fire Protection Association, Batterymarch Park, Quincy, MA 02269-9101.

(iii) Standard for the Installation of Equipment for the Removal of Smoke and Grease-Laden Vapor from Commercial Cooling Equipment, NFPA 96; National Fire Protection Association, Batterymarch Park, Quincy, MA 02269-9101.

(g) WAC 296-24-623 - Fixed extinguishing systems, gaseous agents:

(i) Standard on Carbon Dioxide Extinguishing Systems, ANSI/NFPA 12; National Fire Protection Association, Batterymarch Park, Quincy, MA 02269-9101.

(ii) Standard on Halon 1301, ANSI/NFPA 12B; National Fire Protection Association, Batterymarch Park, Quincy, MA 02269-9101.

(iii) Standard on Halon 1211, ANSI/NFPA 12B; National Fire Protection Association, Batterymarch Park, Quincy, MA 02269-9101.

(iv) Standard on Explosion Prevention Systems, ANSI/NFPA 69; National Fire Protection Association, Batterymarch Park, Quincy, MA 02269-9101.

(v) National Electrical Code, ANSI/NFPA 70; National Fire Protection Association, Batterymarch Park, Quincy, MA 02269-9101.

(vi) Standard on Automatic Fire Detectors, ANSI/NFPA 72E; National Fire Protection Association, Batterymarch Park, Quincy, MA 02269-9101.

(vii) Determination of Halon 1301/1211 Threshold Extinguishing Concentrations Using the Cup Burner Method, Riley and Olson, Ansul Report AL-530-A.

(h) WAC 296-24-627 - Fixed extinguishing systems, water spray and foam agents:

(i) Standard for Foam Extinguisher Systems, ANSI/NFPA 11; National Fire Protection Association, Batterymarch Park, Quincy, MA 02269-9101.

(ii) Standard for High-Expansion Foam Systems, ANSI/NFPA 11A; National Fire Protection Association, Batterymarch Park, Quincy, MA 02269-9101.

(iii) Standard for Water Spray Fixed Systems for Fire Protection, ANSI/NFPA 15; National Fire Protection Association, Batterymarch Park, Quincy, MA 02269-9101.

(iv) Standard for the Installation of Foam-Water Sprinkler Systems and Foam-Water Spray Systems, ANSI/NFPA 16; National Fire Protection Association, Batterymarch Park, Quincy, MA 02269-9101.

(i) WAC 296-24-629 - Fire detection systems:

(i) National Electrical Code, ANSI/NFPA 70; National Fire Protection Association, Batterymarch Park, Quincy, MA 02269-9101.

(ii) Standard for Central Station Signaling Systems, ANSI/NFPA 71; National Fire Protection Association, Batterymarch Park, Quincy, MA 02269-9101.

(iii) Standard on Automatic Fire Detectors, ANSI/NFPA 72E; National Fire Protection Association, Batterymarch Park, Quincy, MA 02269-9101.

(j) WAC 296-800-310 - Employee alarm systems:

(i) National Electrical Code, ANSI/NFPA 70; National Fire Protection Association, Batterymarch Park, Quincy, MA 02269-9101.

(ii) Standard for Central Station Signaling Systems, ANSI/NFPA 71; National Fire Protection Association, Batterymarch Park, Quincy, MA 02269-9101.

(iii) Standard for Local Protective Signaling Systems, ANSI/NFPA 72A; National Fire Protection Association, Batterymarch Park, Quincy, MA 02269-9101.

(iv) Standard for Auxiliary Protective Signaling Systems, ANSI/NFPA 72B; National Fire Protection Association, Batterymarch Park, Quincy, MA 02269-9101.

(v) Standard for Remote Station Protective Signaling Systems, ANSI/NFPA 72C; National Fire Protection Association, Batterymarch Park, Quincy, MA 02269-9101.

(vi) Standard for Proprietary Protective Signaling Systems, ANSI/NFPA 72D; National Fire Protection Association, Batterymarch Park, Quincy, MA 02269-9101.

(vii) Vocal Emergency Alarms in Hospitals and Nursing Facilities: Practice and Potential, National Institute of Stan-

dards and Technology, Quince Orchard and Clopper Roads, Gaithersburg, MD 20899-0011, July, 1977.

(viii) Fire Alarm and Communication Systems, National Institute of Standards and Technology, Quince Orchard and Clopper Roads, Gaithersburg, MD 20899-0011, April, 1976.

[Statutory Authority: RCW 49.17.010, 49.17.040, 49.17.050, and 49.17.-060. 04-07-161, § 296-24-63399, filed 3/23/04, effective 6/1/04. Statutory Authority: Chapter 49.17 RCW. 94-15-096 (Order 94-07), § 296-24-63399, filed 7/20/94, effective 9/20/94; 92-23-017 (Order 92-13), § 296-24-63399, filed 11/10/92, effective 12/18/92; 88-14-108 (Order 88-11), § 296-24-63399, filed 7/6/88; 87-24-051 (Order 87-24), § 296-24-63399, filed 11/30/87. Statutory Authority: RCW 49.17.040 and 49.17.050. 82-02-003 (Order 81-32), § 296-24-63399, filed 12/24/81.]

WAC 296-24-63499 Appendix D—Availability of publications incorporated by references in WAC 296-24-58505—Fire brigades. The final standard for fire brigades, WAC 296-24-585, contains provisions which incorporate certain publications by reference. The publications provide criteria and test methods for protective clothing worn by those fire brigade members who are expected to perform interior structural firefighting. The standard references the publications as the chief sources of information for determining if the protective clothing affords the required level of protection.

It is appropriate to note that the final standard does not require employers to purchase a copy of the referenced publications. Instead, employers can specify (in purchase orders to the manufacturers) that the protective clothing meet the criteria and test methods contained in the referenced publications and can rely on the manufacturers assurances of compliance. Employers, however, may desire to obtain a copy of the referenced publications for their own information.

The section designation of the standard where the referenced publications appear, the title of the publications, and the availability of the publications are as follows:

Section Designation	Referenced Publication	Available From
WAC 296-24-58513 (3)(b)	"Protective Clothing for Structural Fire-fighting." NFPA	National Fire Protection Association, Batterymarch Park, Quincy, MA 02269-9101.
WAC 296-24-58513 (4)(a)	"Development of Criteria for Fire-fighter's Gloves; Vol. II, Part II: Test Methods"(1976)	U.S. Government Printing Office, Washington, D.C. 20401. Stock No. for Vol. II is: 071-033-021-1.
WAC 296-24-58513 (5)(a)	"Model Performance Criteria for Structural Fire-fighter's Helmets" (1977)	U.S. Fire Administration, National Fire Safety and Research Office, 16825 South Seton Avenue, Emmitsburg, Maryland 21727.

The referenced publications (or a microfiche of the publications) are available for review at many universities and public libraries throughout the country. These publications may also be examined at the OSHA Technical Data Center, Room N2439-Rear, United States Department of Labor, 200 Constitution Avenue Northwest, Washington, D.C. 20210 (202-219-7500), or at any OSHA Regional Office (see telephone directories under United States Government-Labor Department).

[Statutory Authority: RCW 49.17.010, [49.17].040, [49.17].050. 02-12-098, § 296-24-63499, filed 6/5/02, effective 8/1/02. Statutory Authority: Chapter 49.17 RCW. 94-15-096 (Order 94-07), § 296-24-63499, filed 7/20/94, effective 9/20/94. Statutory Authority: RCW 49.17.040 and 49.17.050. 82-02-003 (Order 81-32), § 296-24-63499, filed 12/24/81.]

WAC 296-24-63599 Appendix E—Test methods for protective clothing. This appendix contains test methods which must be used to determine if protective clothing affords the required level of protection as specified in WAC 296-24-58505 - fire brigades.

(1) Puncture resistance test method for foot protection.

(a) Apparatus. The puncture resistance test shall be performed on a testing machine having a movable platform adjusted to travel at one-quarter-inch per minute (0.1 cm/sec). Two blocks of hardwood, metal, or plastic shall be prepared as follows: The blocks shall be of such size and thickness as to insure a suitable rigid test ensemble and allow for at least one-inch of the pointed end of an 8D nail to be exposed for the penetration. One block shall have a hole drilled to hold an 8D common nail firmly at an angle of 98°. The second block shall have a maximum one-half inch (1.3 cm) diameter hole drilled through it so that the hole will allow free passage of the nail after it penetrates the insole during the test.

(b) Procedure. The test ensemble consisting of the sample unit, the two prepared blocks, a piece of leather outsole ten to eleven irons thick and a new 8D nail, shall be placed as follows: The 8D nail in the hole, the sample of outsole stock superimposed above the nail, the area of the sole plate to be tested placed on the outsole, and the second block with hole so placed as to allow for free passage of the nail after it passes through the outsole stock and sole plate in that order. The machine shall be started and the pressure, in pounds required for the nail to completely penetrate the outsole and sole plate, recorded to the nearest five pounds. Two determinations shall be made on each sole plate and the results averaged. A new nail shall be used for each determination.

(c) Source. These test requirements are contained in "Military Specification For Fireman's Boots," MIL-B-2885D (1973 and amendment dated 1975) and are reproduced for your convenience.

(2) Test method for determining the strength of cloth by tearing: Trapezoid method.

(a) Test specimen. The specimen shall be a rectangle of cloth three-inches by six-inches (7.6 cm by 15.2 cm). The long dimension shall be parallel to the warp for warp tests and parallel to the filling for filling tests. No two specimens for warp tests shall contain the same warp yarns, nor shall any two specimens for filling tests contain the same filling yarns. The specimen shall be taken no nearer the selvage than 1/10 the width of the cloth. An isosceles trapezoid having an altitude of three inches (7.6 cm) and bases of one inch (2.5 cm) and four inches (10.2 cm) in length, respectively, shall be marked on each specimen, preferably with the aid of a template. A cut approximately three-eighths inch (1 cm) in length shall then be made in the center of a perpendicular to the one inch (2.5 cm) edge.

(b) Apparatus.

(i) Six-ounce (.17 kg) weight tension clamps shall be used so designed that the six ounces (.17 kg) of weight are distributed evenly across the complete width of the sample.

(ii) The machine shall consist of three main parts: Straining mechanism, clamps for holding specimen, and load and elongation recording mechanisms.

(iii) A machine wherein the specimen is held between two clamps and strained by a uniform movement of the pulling clamp shall be used.

(iv) The machine shall be adjusted so that the pulling clamp shall have a uniform speed of 12 ± 10.5 inches per minute (0.5 ± .02 cm/sec).

(v) The machine shall have two clamps with two jaws on each clamp. The design of the two clamps shall be such that one gripping surface or jaw may be an integral part of the rigid frame of the clamp or be fastened to allow a slight vertical movement, while the other gripping surface or jaw shall be completely moveable. The dimension of the immovable jaw of each clamp parallel to the application of the load shall measure one inch, and the dimension of the jaw perpendicular to this direction shall measure three inches or more. The face of the moveable jaw of each clamp shall measure one inch by three inches.

Each jaw face shall have a flat, smooth, gripping surface. All edges which might cause a cutting action shall be rounded to a radius of not over 1/64 inch (.04 cm). In cases where a cloth tends to slip when being tested, the jaws may be faced with rubber or other material to prevent slippage. The distance between the jaws (gage length) shall be one inch at the start of the test.

(vi) Calibrated dial; scale or chart shall be used to indicate applied load and elongation. The machine shall be adjusted or set, so that the maximum load required to break the specimen will remain indicated on the calibrated dial or scale after the test specimen has ruptured.

(vii) The machine shall be of such capacity that the maximum load required to break the specimen shall be not greater than eighty-five percent or less than fifteen percent of the rated capacity.

(viii) The error of the machine shall not exceed two percent up to and including a fifty-pound load (22.6 kg) and one percent over a fifty-pound load (22.6 kg) at any reading within its loading range.

(ix) All machine attachments for determining maximum loads shall be disengaged during this test.

(c) Procedure.

(i) The specimen shall be clamped in the machine along the nonparallel sides of the trapezoid so that these sides lie along the lower edge of the upper clamp and the upper edge of the lower clamp with the cut halfway between the clamps. The short trapezoid base shall be held taut and the long trapezoid base shall lie in the folds.

(ii) The machine shall be started and the force necessary to tear the cloth shall be observed by means of an autographic recording device. The speed of the pulling clamp shall be 12 inches ± 0.5-inch per minute (0.5 ± .02 cm/sec).

(iii) If a specimen slips between the jaws, breaks in or at the edges of the jaws, or if for any reason attributable to faulty technique, an individual measurement falls markedly below the average test results for the sample unit, such result shall be discarded and another specimen shall be tested.

(iv) The tearing strength of the specimen shall be the average of the five highest peak loads of resistance registered for three inches (7.6 cm) of separation of the tear.

(d) Report.

(i) Five specimens in each of the warp and filling direction shall be tested from each sample unit.

(ii) The tearing strength of the sample unit shall be the average of the result obtained from the specimens tested in each of the warp and filling directions and shall be reported separately to the nearest 0.1 pound (.05 kg).

(e) Source. These test requirements are contained in "Federal Test Method Standard 191, Method 5136," and are reproduced for your convenience.

(3) Test method for determining flame resistance of cloth; vertical.

(a) Test specimen. The specimen shall be a rectangle of cloth two and three-quarter inches (7.0 cm) by twelve inches (30.5 cm) with the long dimension parallel to either the warp or filling direction of the cloth. No two warp specimens shall contain the same warp yarns, and no two filling specimens shall contain the same filling yarn.

(b) Number of determinations. Five specimens from each of the warp and filling directions shall be tested from each sample unit.

(c) Apparatus.

(i) Cabinet. A cabinet and accessories shall be fabricated in accordance with the requirements specified in Figures L-1, L-2, and L-3. Galvanized sheet metal or other suitable metal shall be used. The entire inside back wall of the cabinet shall be painted black to facilitate the viewing of the test specimen and pilot flame.

(ii) Burner. The burner shall be equipped with a variable orifice to adjust the flame height, a barrel having a three-eighth inch (9.5 mm) inside diameter and a pilot light.

(A) The burner may be constructed by combining a three-eighth inch (1 cm) inside diameter barrel 3 ± 1/4-inches (7.6 ± .6 cm) long from a fixed orifice burner with a base from a variable orifice burner.

(B) The pilot light tube shall have a diameter of approximately one-sixteenth inch (.2 cm) and shall be spaced one-eighth inch (.3 cm) away from the burner edge with a pilot flame one-eighth inch (.3 cm) long.

(C) The necessary gas connections and the applicable plumbing shall be as specified in Figure L-4 except that a solenoid valve may be used in lieu of the stopcock valve to which the burner is attached. The stopcock valve or solenoid valve, whichever is used, shall be capable of being fully opened or fully closed in 0.1 second.

(D) On the side of the barrel of the burner, opposite the pilot light there shall be a metal rod of approximately one-eighth inch (.3 cm) diameter spaced one-half inch (1.3 cm) from the barrel and extending above the burner. The rod shall have two five-sixteenth inch (.8 cm) prongs marking the distances of three-quarters inch (1.9 cm), and one and one-half inches (3.8 cm) above the top of the burner.

(E) The burner shall be fixed in a position so that the center of the barrel of the burner is directly below the center of the specimen.

(iii) There shall be a control valve system with a delivery rate designed to furnish gas to the burner under a pressure of 2-1/2 ± 1/4 (psi) (17.5 ± 1.8 kPa) at the burner inlet. The manufacturer's recommended delivery rate for the valve system shall be included in the required pressure.

(iv) A synthetic gas mixture shall be of the following composition within the following limits (analyzed at standard conditions): 55 ± 3 percent hydrogen, 24 ± 1 percent methane, 3 ± 1 percent ethane, and 18 ± 1 percent carbon monoxide which will give a specific gravity of 0.365 ± 0.018 (air = 1) and a B.T.U. content of 540 ± 20 per cubic foot (20.1 ± 3.7 kJL) (dry basis) at 69.8 F (21 C).

(v) There shall be metal hooks and weights to produce a series of total loads to determine length of char. The metal hooks shall consist of No. 19 gage steel wire or equivalent and shall be made from three inch (7.6 cm) lengths of wire and bent one-half inch (1.3 cm) from one end to a 45-degree hook. One end of the hook shall be fastened around the neck of the weight to be used.

(vi) There shall be a stop watch or other device to measure the burning time 0.2 second.

(vii) There shall be a scale, graduated in 0.1 inch (.3 cm) to measure the length of char.

(d) Procedure.

(i) The material undergoing test shall be evaluated for the characteristics of after-flame time and char length on each specimen.

(ii) All specimens to be tested shall be at moisture equilibrium under standard atmospheric conditions in accordance with subsection (3)(c) of this appendix. Each specimen to be tested shall be exposed to the test flame within twenty seconds after removal from the standard atmosphere. In case of dispute, all testing will be conducted under standard atmospheric conditions in accordance with subsection (3)(c) of this appendix.

(iii) The specimen in its holder shall be suspended vertically in the cabinet in such a manner that the entire length of the specimen is exposed and the lower end is three-quarters inch (1.9 cm) above the top of the gas burner. The apparatus shall be set up in a draft-free area.

(iv) Prior to inserting the specimen, the pilot flame shall be adjusted to approximately one-eighth inch (.3 cm) in height measured from its lowest point to the tip.

The burner flame shall be adjusted by means of the needle valve in the base of the burner to give a flame height of one and one-half inches (3.8 cm) with the stopcock fully open and the air supply to burner shut off and taped. The one and one-half inch (3.8 cm) flame height is obtained by adjusting the valve so that the uppermost portion (tip) of the flame is level with the tip of the metal prong (see Fig. L-2) specified for adjustment of flame height. It is an important aspect of the evaluation that the flame height to be adjusted with the tip of the flame level with the tip of the metal prong. After inserting the specimen, the stopcock shall be fully opened, and the burner flame applied vertically at the middle of the lower edge of the specimen for twelve seconds and the burner turned off. The cabinet door shall remain shut during testing.

(v) The after-flame shall be the time the specimen continues to flame after the burner flame is shut off.

(vi) After each specimen is removed, the test cabinet shall be cleared of fumes and smoke prior to testing the next specimen.

(vii) After both flaming and glowing have ceased, the char length shall be measured. The char length shall be the distance from the end of the specimen, which was exposed to the flame, to the end of a tear (made lengthwise) of the specimen through the center of the charred area as follows: The specimen shall be folded lengthwise and creased by hand along a line through the highest peak of the charred area. The hook shall be inserted in the specimen (or a hole, one-quarter inch (.6 cm) diameter or less, punched out for the hook) at one side of the charred area one-quarter inch (.6 cm) from the adjacent outside edge and one-quarter inch (.6 cm) in from the lower end. A weight of sufficient size such that the weight and hook together shall equal the total tearing load required in Table L-2 of this section shall be attached to the hook.

(viii) A tearing force shall be applied gently to the specimen by grasping the corner of the cloth at the opposite edge of the char from the load and raising the specimen and weight clear of the supporting surface. The end of the tear shall be marked off on the edge and the char length measurement made along the undamaged edge.

Loads for determining char length applicable to the weight of the test cloth shall be as shown in Table L-2.

TABLE L-2

Specified weight per square yard of cloth before any fire retardant treatment or coating - ounces	Total learning weight for determining the charred length - pound
2.0 to 6.0	0.25
Over 6.0 to 15.0	0.50
Over 15.0 to 23.0	0.75
Over 23.0	1.0

To change into S.I. (System International) units, 1 ounce =28.35 grams, 1 pound = 453 grams, 1 yard = .91 metre.

(ix) The after-flame time of the specimen shall be recorded to the nearest 0.2 second and the char length to the nearest 0.1 inch (.3 cm).

(e) Report.

(i) The after-flame time and char length of the sample unit shall be the average of the results obtained from the individual specimens tested. All values obtained from the individual specimens shall be recorded.

(ii) The after-flame time shall be reported in the nearest 0.2 second and the char length to the nearest 0.1 inch (.3 cm).

(f) Source. These test requirements are contained in "Federal Test Method Standard 191, Method 5903 (1971)," and are reproduced for your convenience.

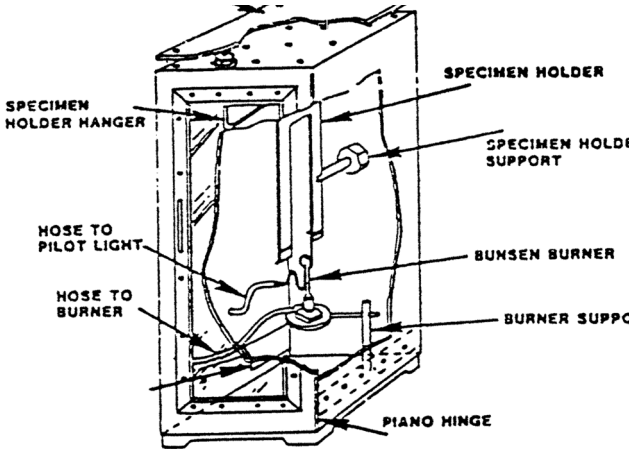

Figure L-1 - Vertical flame resistance textile apparatus. All given dimensions are in inches. System International (S.I.) unit: 1 inch = 2.54 cm.

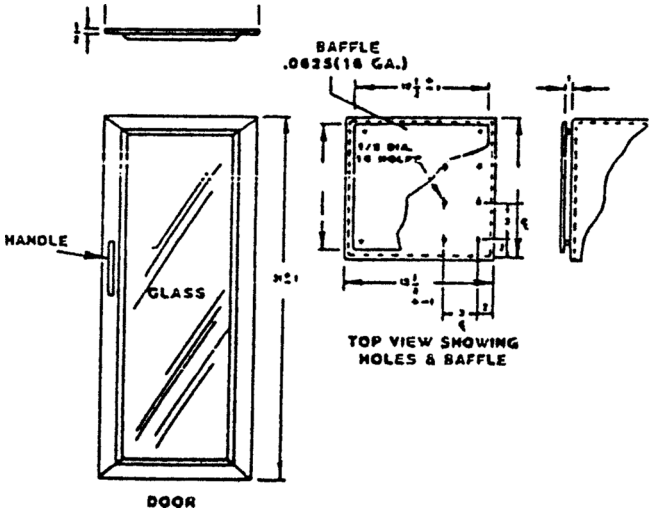

Figure L-2 - Vertical flame resistance textile apparatus, door and top view w/baffle. All given dimensions are in inches. System International (S.I.) unit: 1 inch = 2.54 cm.

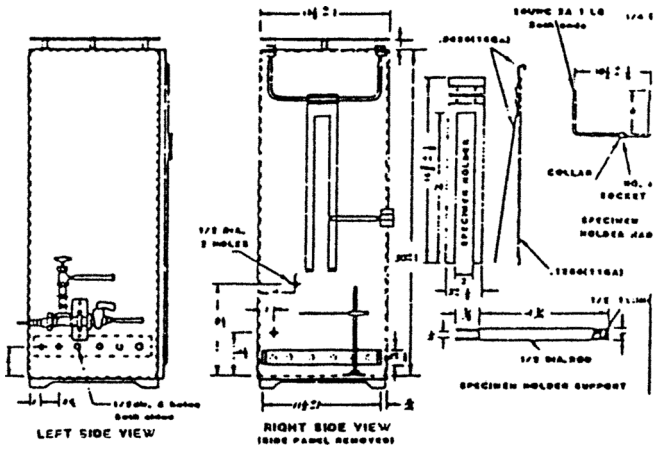

Figure L-3 - Vertical flame resistance textile apparatus, views and details. All given dimensions are in inches. System International (S.I.) unit: 1 inch = 2.54 cm.

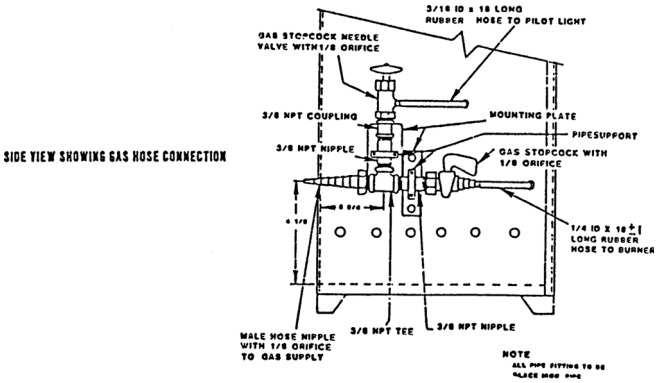

Figure L-4 - Vertical flame resistance textile apparatus. All given dimensions are in inches. System International (S.I.) unit: 1 inch = 2.54 cm.

[Statutory Authority: Chapter 49.17 RCW. 92-23-017 (Order 92-13), § 296-24-63599, filed 11/10/92, effective 12/18/92; 87-24-051 (Order 87-24), § 296-24-63599, filed 11/30/87. Statutory Authority: RCW 49.17.040 and 49.17.050. 82-02-003 (Order 81-32), § 296-24-63599, filed 12/24/81.]

PART H-2
SAFE PRACTICES AND VENTILATION OF ABRASIVE BLASTING OPERATIONS

Note: Safe practices and ventilation of abrasive blasting operations have been moved to chapter 296-818 WAC.

PART I
WELDING, CUTTING AND BRAZING

WAC 296-24-680 Welding, cutting, and brazing. You are required to protect employees from exposure to hexavalent chromium during the stainless steel welding process. See WAC 296-62-08003, Hexavalent chromium for specific criteria.

[Statutory Authority: RCW 49.17.010, 49.17.040, 49.17.050, 49.17.060. 06-16-106, § 296-24-680, filed 8/1/06, effective 9/1/06; Order 73-5, § 296-24-680, filed 5/9/73 and Order 73-4, § 296-24-680, filed 5/7/73.]

WAC 296-24-68001 Definitions. (1) "Welder" and "welding operator" mean any operator of electric or gas welding and cutting equipment.

(2) "Approved" means listed or approved by a nationally recognized testing laboratory. Refer to WAC 296-24-58501(19) for definitions of listed and approved, and federal regulation 29 CFR 1910.7 for nationally recognized testing laboratory.

(3) All other welding terms are used in accordance with American Welding Society-Terms and Definitions-A3.0-1969.

[Statutory Authority: Chapter 49.17 RCW. 88-23-054 (Order 88-25), § 296-24-68001, filed 11/14/88; Order 73-5, § 296-24-68001, filed 5/9/73 and Order 73-4, § 296-24-68001, filed 5/7/73.]

WAC 296-24-682 Installation and operation of oxygen fuel gas systems for welding and cutting.

[Order 73-5, § 296-24-682, filed 5/9/73 and Order 73-4, § 296-24-682, filed 5/7/73.]

WAC 296-24-68201 General requirements. (1) Flammable mixture. Mixtures of fuel gases and air or oxygen may

be explosive and shall be guarded against. No device or attachment facilitating or permitting mixtures of air or oxygen with flammable gases prior to consumption, except at the burner or in a standard torch, shall be allowed unless approved for the purpose.

(2) Maximum pressure. Under no condition shall acetylene be generated, piped (except in approved cylinder manifolds) or utilized at a pressure in excess of 15 p.s.i. gage pressure or 30 p.s.i. absolute pressure. (The 30 p.s.i. absolute pressure limit is intended to prevent unsafe use of acetylene in pressurized chambers such as caissons, underground excavations or tunnel construction.) This requirement does not apply to storage of acetylene dissolved in a suitable solvent in cylinders manufactured and maintained according to U.S. Department of Transportation requirements, or to acetylene for chemical use. The use of liquid acetylene shall be prohibited.

(3) Apparatus. Only approved apparatus such as torches, regulators or pressure-reducing valves, acetylene generators, and manifolds shall be used. Use of replacement tips will not nullify the "approved apparatus" status of a torch, if such replacement tips are made to the same specifications as the original tip of the torch at the time of approval by the nationally recognized testing laboratory, or if the use of such tips in conjunction with convertor/adaptors results in the same specifications as the original tip at the time of approval by the nationally recognized testing laboratory.

(4) Personnel. Workers in charge of the oxygen or fuel-gas supply equipment, including generators, and oxygen or fuel-gas distribution piping systems shall be instructed and judged competent by their employers for this important work before being left in charge. Rules and instructions covering the operation and maintenance of oxygen or fuel-gas supply equipment including generators, and oxygen or fuel-gas distribution piping systems shall be readily available.

[Statutory Authority: Chapter 49.17 RCW. 94-15-096 (Order 94-07), § 296-24-68201, filed 7/20/94, effective 9/20/94; 89-11-035 (Order 89-03), § 296-24-68201, filed 5/15/89, effective 6/30/89; Order 73-5, § 296-24-68201, filed 5/9/73 and Order 73-4, § 296-24-68201, filed 5/7/73.]

WAC 296-24-68203 Cylinders and containers. (1) Approval and marking. All portable cylinders used for the storage and shipment of compressed gases shall be constructed and maintained in accordance with the regulations of the United States Department of Transportation, 49 CFR Parts 171-179.

(a) Compressed gas cylinders shall be legibly marked, for the purpose of identifying the gas content, with either the chemical or the trade name of the gas. Such marking shall be by means of stenciling, stamping, or labeling, and shall not be readily removable. Whenever practical, the marking shall be located on the shoulder of the cylinder.

Note: This method conforms to the American National Standard Method for Marking Portable Compressed Gas Containers to Identify the Material Contained, ANSI Z 48.1-1954.

(b) Compressed gas cylinders shall be equipped with connections complying with the American National Standard Compressed Gas Cylinder Valve Outlet and Inlet Connections, ANSI B 57.1-1965.

(c) All cylinders with a water weight capacity of over thirty pounds shall be equipped with means of connecting a valve protection cap or with a collar or recess to protect the valve.

(2) Storage of cylinders - general.

(a) Cylinders shall be kept away from radiators and other sources of heat.

(b) Inside of buildings, cylinders shall be stored in a well-protected, well-ventilated, dry location, at least twenty feet from highly combustible materials such as oil or excelsior. Cylinders should be stored in definitely assigned places away from elevators, stairs, or gangways. Assigned storage spaces shall be located where cylinders will not be knocked over or damaged by passing or falling objects, or subject to tampering by unauthorized persons. Cylinders shall not be kept in unventilated enclosures such as lockers and cupboards.

(c) Empty cylinders shall have their valves closed.

(d) Valve protection caps, where cylinder is designed to accept a cap, shall always be in place, hand-tight, except when cylinders are in use or connected for use.

(3) Fuel-gas cylinder storage. Inside a building, cylinders, except those in actual use or attached ready for use, shall be limited to a total gas capacity of two thousand cubic feet or three hundred pounds of liquefied petroleum gas.

(a) For storage in excess of two thousand cubic feet total gas capacity of cylinders or three hundred pounds of liquefied petroleum gas, a separate room or compartment conforming to the requirements specified in WAC 296-24-68211 (6)(h) and (i) shall be provided, or cylinders shall be kept outside or in a special building. Special buildings, rooms or compartments shall have no open flame for heating or lighting and shall be well ventilated. They may also be used for storage of calcium carbide in quantities not to exceed six hundred pounds, when contained in metal containers complying with WAC 296-24-68213 (1)(a) and (b). Signs should be conspicuously posted in such rooms reading, "Danger—No smoking, matches or open lights," or other equivalent wording.

(b) Acetylene cylinders shall be stored valve end up.

(4) Oxygen storage.

(a) Oxygen cylinders shall not be stored near highly combustible material, especially oil and grease; or near reserve stocks of carbide and acetylene or other fuel-gas cylinders, or near any other substance likely to cause or accelerate fire; or in an acetylene generator compartment.

(b) Oxygen cylinders stored in outside generator houses shall be separated from the generator or carbide storage rooms by a noncombustible partition having a fire-resistance rating of at least one hour. This partition shall be without openings and shall be gastight.

(c) Oxygen cylinders in storage shall be separated from fuel-gas cylinders or combustible materials (especially oil or grease), a minimum distance of twenty feet or by a noncombustible barrier at least five feet high having a fire-resistance rating of at least one-half hour. (Cylinders "in-use," secured to a hand truck or structural member, with regulators, hoses, and torch temporarily removed for security purposes overnight or weekends, are not considered "in-storage.")

(d) Where a liquid oxygen system is to be used to supply gaseous oxygen for welding or cutting and the system has a storage capacity of more than thirteen thousand cubic feet of oxygen (measured at 14.7 psi(a) and 70°F), connected in service or ready for service, or more than twenty-five thousand

cubic feet of oxygen (measured at 14.7 psi(a) and 70°F), including unconnected reserves on hand at the site, it shall comply with the provisions of the Standard for Bulk Oxygen Systems at Consumer Sites, NFPA No. 566-1965.

(5) Operating procedures.

(a) Cylinders, cylinder valves, couplings, regulators, hose, and apparatus shall be kept free from oily or greasy substances. Oxygen cylinders or apparatus shall not be handled with oily hands or gloves. A jet of oxygen must never be permitted to strike an oily surface, greasy clothes, or enter a fuel oil or other storage tank.

(b) When transporting cylinders by a crane or derrick, a cradle, boat, or suitable platform shall be used. Slings or electric magnets shall not be used for this purpose. Valve-protection caps, where cylinder is designed to accept a cap, shall always be in place.

(c) Cylinders shall not be dropped or struck or permitted to strike each other violently.

(d) Valve-protection caps shall not be used for lifting cylinders from one vertical position to another. Bars shall not be used under valves or valve-protection caps to pry cylinders loose when frozen to the ground or otherwise fixed; the use of warm (not boiling) water is recommended. Valve-protection caps are designed to protect cylinder valves from damage.

(e) Unless cylinders are secured on a special truck, regulators shall be removed and valve-protection caps, when provided for, shall be put in place before cylinders are moved.

(f) Cylinders not having fixed hand wheels shall have keys, handles, or nonadjustable wrenches on valve stems while these cylinders are in service. In multiple cylinder installations only one key or handle is required for each manifold.

(g) Cylinder valves shall be closed before moving cylinders.

(h) Cylinder valves shall be closed when work is finished.

(i) Valves of empty cylinders shall be closed.

(j) Cylinders shall be kept far enough away from the actual welding or cutting operation so that sparks, hot slag, or flame will not reach them, or fire-resistant shields shall be provided.

(k) Cylinders shall not be placed where they might become part of an electric circuit. Contacts with third rails, trolley wires, etc., shall be avoided. Cylinders shall be kept away from radiators, piping systems, layout tables, etc., that may be used for grounding electric circuits such as for arc welding machines. Any practice such as the tapping of an electrode against a cylinder to strike an arc shall be prohibited.

(l) Cylinders shall never be used as rollers or supports, whether full or empty.

(m) The numbers and markings stamped into cylinders shall not be tampered with.

(n) No person, other than the gas supplier, shall attempt to mix gases in a cylinder. No one, except the owner of the cylinder or the person authorized by the owner, shall refill a cylinder.

(o) No one shall tamper with safety devices in cylinders or valves.

(p) Cylinders shall not be dropped or otherwise roughly handled.

(q) Unless connected to a manifold, oxygen from a cylinder shall not be used without first attaching an oxygen regulator to the cylinder valve. Before connecting the regulator to the cylinder valve, the valve shall be opened slightly for an instant and then closed. (Always stand to one side of the outlet when opening the cylinder valve.)

(r) A hammer or wrench shall not be used to open cylinder valves. If valves cannot be opened by hand, the supplier shall be notified.

(s) Cylinder valves shall not be tampered with nor should any attempt be made to repair them. If trouble is experienced, the supplier should be sent a report promptly indicating the character of the trouble and the cylinder's serial number. Supplier's instructions as to its disposition shall be followed.

(t) Complete removal of the stem from a diaphragm-type cylinder valve shall be avoided.

(u) Fuel-gas cylinders shall be placed with valve end up whenever they are in use. Liquefied gases shall be stored and shipped with the valve end up.

(v) Cylinders shall be handled carefully. Cylinders shall not be subjected to rough handling, knocks, or falls which are liable to damage the cylinder, valve or safety devices and cause leakage.

(w) Before connecting a regulator to a cylinder valve, the valve shall be opened slightly and closed immediately. The valve shall be opened while standing to one side of the outlet; never in front of it. Fuel-gas cylinder valves shall not be cracked near other welding work or near sparks, flame, or other possible sources of ignition.

(x) Before a regulator is removed from a cylinder valve, the cylinder valve shall be closed and the gas released from the regulator.

(y) Nothing shall be placed on top of an acetylene cylinder when in use which may damage the safety device or interfere with the quick closing of the valve.

(z) If cylinders are found to have leaky valves or fittings which cannot be stopped by closing of the valve, the cylinders shall be taken outdoors away from sources of ignition and slowly emptied.

(aa) A warning should be placed near cylinders having leaking fuse plugs or other leaking safety devices not to approach them with a lighted cigarette or other source of ignition. Such cylinders should be plainly tagged; the supplier should be promptly notified and instructions provided by the supplier shall be followed as to their return.

(bb) Safety devices shall not be tampered with.

(cc) Fuel-gas shall not be used from cylinders through torches or other devices equipped with shutoff valves without reducing the pressure through a suitable regulator attached to the cylinder valve or manifold.

(dd) The cylinder valve shall always be opened slowly.

(ee) An acetylene cylinder valve shall not be opened more than one and one-half turns of the spindle, and preferably no more than three-fourths of a turn.

(ff) Where a special wrench is required it shall be left in position on the stem of the valve while the cylinder is in use so that the fuel-gas flow can be quickly turned off in case of emergency. In the case of manifolded or coupled cylinders at

least one such wrench shall always be available for immediate use.

(gg) When cylinders are transported by powered vehicle they shall be secured in a vertical position.

(hh) A suitable cylinder truck, chain, or other steadying device shall be used to prevent cylinders from being knocked over while in use.

[Statutory Authority: Chapter 49.17 RCW. 91-03-044 (Order 90-18), § 296-24-68203, filed 1/10/91, effective 2/12/91; 88-11-021 (Order 88-04), § 296-24-68203, filed 5/11/88; Order 73-5, § 296-24-68203, filed 5/9/73 and Order 73-4, § 296-24-68203, filed 5/7/73.]

WAC 296-24-68205 Manifolding of cylinders. (1) Fuel-gas manifolds.

(a) Manifolds shall be approved either separately for each component part or as an assembled unit.

(b) Except as provided in (1)(c) of this section fuel-gas cylinders connected to one manifold inside a building shall be limited to a total capacity not exceeding 300 pounds of liquefied petroleum gas or 3,000 cubic feet of other fuel-gas. More than one such manifold with connected cylinders may be located in the same room provided the manifolds are at least 50 feet apart or separated by a noncombustible barrier at least 5 feet high having a fire-resistance rating of at least one-half hour.

(c) Fuel-gas cylinders connected to one manifold having an aggregate capacity exceeding 300 pounds of liquefied petroleum gas or 3,000 cubic feet of other fuel-gas shall be located outdoors, or in a separate building or room constructed in accordance with WAC 296-24-68211 (6)(h) and (i).

(d) Separate manifold buildings or rooms may also be used for the storage of drums of calcium carbide and cylinders containing fuel gases as provided in WAC 296-24-68203(3). Such buildings or rooms shall have no open flames for heating or lighting and shall be well-ventilated.

(e) High-pressure fuel-gas manifolds shall be provided with approved pressure regulating devices.

(2) High-pressure oxygen manifolds (for use with cylinders having a department of transportation service pressure above 200 p.s.i.g.).

(a) Manifolds shall be approved either separately for each component or as an assembled unit.

(b) Oxygen manifolds shall not be located in an acetylene generator room. Oxygen manifolds shall be separated from fuel-gas cylinders or combustible materials (especially oil or grease), a minimum distance of 20 feet or by a noncombustible barrier at least 5 feet high having a fire-resistance rating of at least one-half hour.

(c) Except as provided in WAC 296-24-68205 (2)(d) oxygen cylinders connected to one manifold shall be limited to a total gas capacity of 6,000 cubic feet. More than one such manifold with connected cylinders may be located in the same room provided the manifolds are at least 50 feet apart or separated by a noncombustible barrier at least 5 feet high having a fire-resistance rating of at least one-half hour.

(d) An oxygen manifold, to which cylinders having an aggregate capacity of more than 6,000 cubic feet of oxygen are connected, should be located outdoors or in a separate noncombustible building. Such a manifold, if located inside a building having other occupancy, shall be located in a separate room of noncombustible construction having a fire-resistance rating of at least one-half hour or in an area with no combustible material within 20 feet of the manifold.

(e) An oxygen manifold or oxygen bulk supply system which has storage capacity of more than 13,000 cubic feet of oxygen (measured at 14.7 p.s.i.a. and 70°F), connected in service or ready for service, or more than 25,000 cubic feet of oxygen (measured at 14.7 p.s.i.a. and 70°F), including unconnected reserves on hand at the site, shall comply with the provisions of the Standard for Bulk Oxygen Systems at Consumer Sites, NFPA No. 566-1965.

(f) High-pressure oxygen manifolds shall be provided with approved pressure-regulating devices.

(3) Low-pressure oxygen manifolds (for use with cylinders having a department of transportation service pressure not exceeding 200 p.s.i.g.).

(a) Manifolds shall be of substantial construction suitable for use with oxygen at a pressure of 250 p.s.i.g. They shall have a minimum bursting pressure of 1,000 p.s.i.g. and shall be protected by a safety relief device which will relieve at a maximum pressure of 500 p.s.i.g.

Note: DOT-4L200 cylinders have safety devices which relieve at a maximum pressure of 250 p.s.i.g. (or 235 p.s.i.g. if vacuum insulation is used).

(b) Hose and hose connections subject to cylinder pressure shall comply with WAC 296-24-68209(5). Hose shall have a minimum bursting pressure of 1,000 p.s.i.g.

(c) The assembled manifold including leads shall be tested and proven gas-tight at a pressure of 300 p.s.i.g. The fluid used for testing oxygen manifolds shall be oil-free and not combustible.

(d) The location of manifolds shall comply with WAC 296-24-68205 (2)(b), (c), (d) and (e).

(e) The following sign shall be conspicuously posted at each manifold:

Low-Pressure Manifold
Do Not Connect High-Pressure Cylinders
Maximum Pressure—250 P.S.I.G.

(4) Portable outlet headers.

(a) Portable outlet headers shall not be used indoors except for temporary service where the conditions preclude a direct supply from outlets located on the service piping system.

(b) Each outlet on the service piping from which oxygen or fuel-gas is withdrawn to supply a portable outlet header shall be equipped with a readily accessible shutoff valve.

(c) Hose and hose connections used for connecting the portable outlet header to the service piping shall comply with WAC 296-24-68209(5).

(d) Master shutoff valves for both oxygen and fuel-gas shall be provided at the entry end of the portable outlet header.

(e) Portable outlet headers for fuel-gas service shall be provided with an approved hydraulic back-pressure valve installed at the inlet and preceding the service outlets, unless an approved pressure-reducing regulator, an approved backflow check valve, or an approved hydraulic back-pressure valve is installed at each outlet. Outlets provided on headers

for oxygen service may be fitted for use with pressure-reducing regulators or for direct hose connection.

(f) Each service outlet on portable outlet headers shall be provided with a valve assembly that includes a detachable outlet seal cap, chained or otherwise attached to the body of the valve.

(g) Materials and fabrication procedures for portable outlet headers shall comply with WAC 296-24-68207 (1), (2) and (5).

(h) Portable outlet headers shall be provided with frames which will support the equipment securely in the correct operating position and protect them from damage during handling and operation.

(5) Manifold operating procedures.

(a) Cylinder manifolds shall be installed under the supervision of someone familiar with the proper practices with reference to their construction and use.

(b) All component parts used in the methods of manifolding described in (1)(a) through (e) of this section shall be approved as to materials, design and construction either separately or as an assembled unit.

(c) All manifolds and parts used in methods of manifolding shall be used only for the gas or gases for which they are approved.

(d) When acetylene cylinders are coupled, approved flash arresters shall be installed between each cylinder and the coupler block. For outdoor use only, and when the number of cylinders coupled does not exceed three, one flash arrester installed between the coupler block and regulator is acceptable.

(e) Each fuel-gas cylinder lead should be provided with a backflow check valve.

(f) The aggregate capacity of fuel-gas cylinders connected to a portable manifold inside a building shall not exceed 3,000 cubic feet of gas.

(g) Acetylene and liquefied fuel-gas cylinders shall be manifolded in a vertical position.

(h) The pressure in the gas cylinders connected to and discharged simultaneously through a common manifold shall be approximately equal.

[Order 73-5, § 296-24-68205, filed 5/9/73 and Order 73-4, § 296-24-68205, filed 5/7/73.]

WAC 296-24-68207 Service piping systems. (1) Materials and design. (a) Piping and fittings shall comply with Section 2, Industrial Gas and Air Piping Systems, of the American National Standard Code for Pressure Piping, ANSI B 31.1-1967, insofar as it does not conflict with WAC 296-24-68207 (1)(b) and (c).

(b) Pipe shall be at least Schedule 40 and fittings shall be at least standard weight in sizes up to and including 6-inch nominal.

(c) Copper tubing shall be Types K or L in accordance with the Standard Specification for Seamless Copper Water Tube, ASTM B88-66a.

(d) Piping shall be steel, wrought iron, brass or copper pipe, or seamless copper, brass or stainless steel tubing, except as provided in WAC 296-24-68207 (1)(e), (f), (g), (h) and (i).

(e) Oxygen piping and fittings at pressures in excess of 700 p.s.i.g., shall be stainless steel or copper alloys.

(f) Hose connections and hose complying with WAC 296-24-68209(5) may be used to connect the outlet of a manifold pressure regulator to piping providing the working pressure of the piping is 250 p.s.i.g. or less and the length of the hose does not exceed 5 feet. Hose shall have a minimum bursting pressure of 1,000 p.s.i.g.

(g) When oxygen is supplied to a service piping system from a low-pressure oxygen manifold without an intervening pressure regulating device, the piping system shall have a minimum design pressure of 250 p.s.i.g. A pressure regulating device shall be used at each station outlet when the connected equipment is for use at pressures less than 250 p.s.i.g.

(h) Piping for acetylene or acetylenic compounds shall be steel or wrought iron.

(i) Unalloyed copper shall not be used for acetylene or acetylenic compounds except in listed equipment.

(2) Piping joints.

(a) Joints in steel or wrought iron piping shall be welded, threaded or flanged. Fittings, such as ells, tees, couplings, and unions, may be rolled, forged or cast steel, maleable iron or nodular iron. Gray or white cast iron fittings are prohibited.

(b) Joints in brass or copper pipe shall be welded, brazed, threaded, or flanged. If of the socket type, they shall be brazed with silver-brazing alloy or similar high melting point (not less than 800°F) filler metal.

(c) Joints in seamless copper, brass, or stainless steel tubing shall be approved gas tubing fittings or the joints shall be brazed. If of the socket type, they shall be brazed with silver-brazing alloy or similar high melting point (not less than 800°F) filler metal.

(3) Installation.

(a) Distribution lines shall be installed and maintained in a safe operating condition.

(b) Piping located inside or outside of buildings may be placed above or below ground. All piping shall be run as directly as practicable, protected against physical damage, proper allowance being made for expansion and contraction, jarring and vibration. Pipe laid underground in earth shall be located below the frost line and protected against corrosion. After assembly, piping shall be thoroughly blown out with air or nitrogen to remove foreign materials. For oxygen piping, only oil-free air, oil-free nitrogen, or oil-free carbon dioxide shall be used.

(c) Only piping which has been welded or brazed shall be installed in tunnels, trenches or ducts. Shutoff valves shall be located outside such conduits. Oxygen piping may be placed in the same tunnel, trench or duct with fuel-gas pipelines, provided there is good natural or forced ventilation.

(d) Low points in piping carrying moist gas shall be drained into drip pots constructed so as to permit pumping or draining out the condensate at necessary intervals. Drain valves shall be installed for this purpose having outlets normally closed with screw caps or plugs. No open end valves or petcocks shall be used, except that in drips located out of doors, underground, and not readily accessible, valves may be used at such points if they are equipped with means to secure them in the closed position. Pipes leading to the surface of the ground shall be cased or jacketed where necessary to prevent loosening or breaking.

(e) Gas cocks or valves shall be provided for all buildings at points where they will be readily accessible for shutting off the gas supply to these buildings in any emergency. Underground valve boxes or manholes should be avoided wherever possible. There shall also be provided a shutoff valve in the discharge line from the generator, gas holder, manifold or other source of supply.

(f) Shutoff valves shall not be installed in safety relief lines in such a manner that the safety relief device can be rendered ineffective.

(g) Fittings and lengths of pipe shall be examined internally before assembly and, if necessary, freed from scale or dirt. Oxygen piping and fittings shall be washed out with a suitable solution which will effectively remove grease and dirt but will not react with oxygen.

Note: Hot water solutions of caustic soda or trisodium phosphate are effective cleaning agents for this purpose.

(h) Piping shall be thoroughly blown out after assembly to remove foreign materials. For oxygen piping, oil-free air, oil-free nitrogen, or oil-free carbon dioxide shall be used. For other piping, air or inert gas may be used.

(i) When flammable gas lines or other parts of equipment are being purged of air or gas, open lights or other sources of ignition shall not be permitted near uncapped openings.

(j) No welding or cutting shall be performed on an acetylene or oxygen pipeline, including the attachment of hangers or supports, until the line has been purged. Only oil-free air, oil-free nitrogen, or oil-free carbon dioxide shall be used to purge oxygen lines.

(4) Painting and signs.

(a) Underground pipe and tubing and outdoor ferrous pipe and tubing shall be covered or painted with a suitable material for protection against corrosion.

(b) Aboveground piping systems shall be marked in accordance with the American National Standard Scheme for the Identification of Piping Systems, ANSI A 13.1-1956.

(c) Station outlets shall be marked to indicate the name of the gas.

(5) Testing.

(a) Piping systems shall be tested and proved gastight at 1 1/2 times the maximum operating pressure, and shall be thoroughly purged of air before being placed in service. The material used for testing oxygen lines shall be oil free and noncombustible. Flames shall not be used to detect leaks.

(b) When flammable gas lines or other parts of equipment are being purged of air or gas, sources of ignition shall not be permitted near uncapped openings.

[Order 73-5, § 296-24-68207, filed 5/9/73 and Order 73-4, § 296-24-68207, filed 5/7/73.]

WAC 296-24-68209 Protective equipment, hose, and regulators. (1) General. Equipment shall be installed and used only in the service for which it is approved and as recommended by the manufacturer.

(2) Pressure relief devices. Service piping systems shall be protected by pressure relief devices set to function at not more than the design pressure of the systems and discharging upwards to a safe location.

(3) Piping protective equipment.

(a) The fuel-gas and oxygen piping systems, including portable outlet headers shall incorporate the protective equipment shown in Figures Q-1, Q-2, and Q-3.

When only a portion of a fuel-gas system is to be used with oxygen, only that portion need comply with (3)(a) of this section.

(b) Approved protective equipment (designated P_F in Figs. Q-1, Q-2, and Q-3) shall be installed in fuel-gas piping to prevent:

(i) Backflow of oxygen into the fuel-gas supply system;

(ii) Passage of a flash back into the fuel-gas supply system; and

(iii) Excessive back pressure of oxygen in the fuel-gas supply system. The three functions of the protective equipment may be combined in one device or may be provided by separate devices.

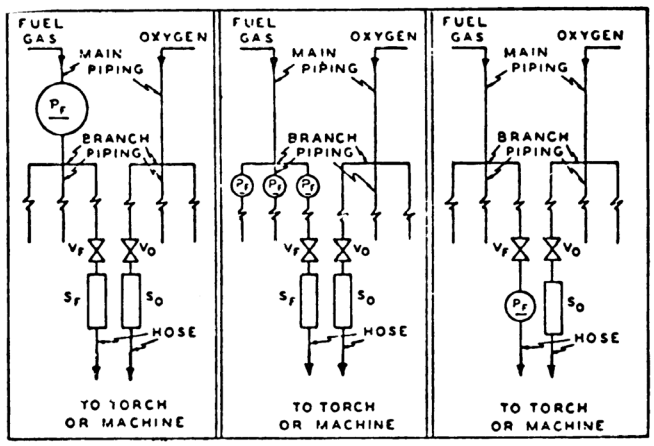

Fig. Q-1 **Fig. Q-2** **Fig. Q-3**

LEGEND
P_F—Protective equipment in fuel gas piping
V_F—Fuel gas station outlet valve
V_O—Oxygen station outlet valve
S_F—Backflow prevention device(s) at fuel gas station outlet
S_O—Backflow prevention device(s) at oxygen station outlet

(c) The protective equipment shall be located in the main supply line, as in Figure Q-1 or at the head of each branch line, as in Figure Q-2 or at each location where fuel-gas is withdrawn, as in Figure Q-3. Where branch lines are of 2-inch pipe size or larger or of substantial length, protective equipment (designated as P_F) shall be located as shown in either Q-2 and Q-3.

(d) Backflow protection shall be provided by an approved device that will prevent oxygen from flowing into the fuel-gas system or fuel from flowing into the oxygen system (see S_F, Figs. Q-1 and Q-2).

(e) Flash-back protection shall be provided by an approved device that will prevent flame from passing into the fuel-gas system.

(f) Back-pressure protection shall be provided by an approved pressure-relief device set at a pressure not greater than the pressure rating of the backflow or the flashback protection device, whichever is lower. The pressure-relief device shall be located on the downstream side of the backflow and flashback protection devices. The vent from the pressure-

relief device shall be at least as large as the relief device inlet and shall be installed without low points that may collect moisture. If low points are unavoidable, drip pots with drains closed with screw plugs or caps shall be installed at the low points. The vent terminus shall not endanger personnel or property through gas discharge; shall be located away from ignition sources; and shall terminate in a hood or bend.

(g) If pipeline protective equipment incorporates a liquid, the liquid level shall be maintained, and a suitable antifreeze may be used to prevent freezing.

(h) Fuel gas for use with equipment not requiring oxygen shall be withdrawn upstream of the piping protective devices.

(4) Station outlet protective equipment.

(a) A check valve pressure regulator, hydraulic seal, or combination of these devices shall be provided at each station outlet, including those on portable headers, to prevent backflow, as shown in Figures Q-1, Q-2, and Q-3 and designated as S_F and S_O.

(b) When approved pipeline protective equipment (designated P_F) is located at the station outlet as in Figure Q-3, no additional check valve, pressure regulator, or hydraulic seal is required.

(c) A shutoff valve (designated V_F and V_O) shall be installed at each station outlet and shall be located on the upstream side of other station outlet equipment.

(d) If the station outlet is equipped with a detachable regulator, the outlet shall terminate in a union connection that complies with the Regulator Connection Standards, 1958, Compressed Gas Association.

(e) If the station outlet is connected directly to a hose, the outlet shall terminate in a union connection complying with the Standard Hose Connection Specifications, 1957, Compressed Gas Association.

(f) Station outlets may terminate in pipe threads to which permanent connections are to be made, such as to a machine.

(g) Station outlets shall be equipped with a detachable outlet seal cap secured in place. This cap shall be used to seal the outlet except when a hose, a regulator, or piping is attached.

(h) Where station outlets are equipped with approved backflow and flashback protective devices, as many as four torches may be supplied from one station outlet through rigid piping, provided each outlet from such piping, is equipped with a shutoff valve and provided the fuel-gas capacity of any one torch does not exceed 15 cubic feet per hour. This rule does not apply to machines.

(5) Hose and hose connections.

(a) Hose for oxy-fuel gas service shall comply with the Specification for Rubber Welding Hose, 1958, Compressed Gas Association and Rubber Manufacturers Association.

(b) The generally recognized colors are red for acetylene and other fuel-gas hose, green for oxygen hose, and black for inert-gas and air hose.

(c) When parallel lengths of oxygen and acetylene hose are taped together for convenience and to prevent tangling, not more than 4 inches out of 12 inches shall be covered by tape.

(d) Hose connections shall comply with the Standard Hose Connection Specifications, 1957, Compressed Gas Association.

(e) Hose connections shall be clamped or otherwise securely fastened in a manner that will withstand, without leakage, twice the pressure to which they are normally subjected in service, but in no case less than a pressure of 300 p.s.i. Oil-free air or an oil-free inert gas shall be used for the test.

(f) Hose showing leaks, burns, worn places, or other defects rendering it unfit for service shall be repaired or replaced.

(6) Pressure-reducing regulators.

(a) Pressure-reducing regulators shall be used only for the gas and pressures for which they are intended. The regulator inlet connections shall comply with Regulator Connection Standards, 1958, Compressed Gas Association.

(b) When regulators or parts of regulators, including gages, need repair, the work shall be performed by skilled mechanics who have been properly instructed.

(c) Gages on oxygen regulators shall be marked "USE NO OIL."

(d) Union nuts and connections on regulators shall be inspected before use to detect faulty seats which may cause leakage of gas when the regulators are attached to the cylinder valves. Damaged nuts or connections shall be destroyed.

[Order 73-5, § 296-24-68209, filed 5/9/73 and Order 73-4, § 296-24-68209, filed 5/7/73.]

WAC 296-24-68211 Acetylene generators. (1) Approval and marking.

(a) Generators shall be of approved construction and shall be plainly marked with the maximum rate of acetylene in cubic feet per hour for which they are designed; the weight and size of carbide necessary for a single charge; the manufacturer's name and address; and the name or number of the type of generator.

(b) Carbide shall be of the size marked on the generator nameplate.

(2) Rating and pressure limitations.

(a) The total hourly output of a generator shall not exceed the rate for which it is approved and marked. Unless specifically approved for higher ratings, carbide-feed generators shall be rated at 1 cubic foot per hour per pound of carbide required for a single complete charge.

(b) Relief valves shall be regularly operated to insure proper functioning. Relief valves for generating chambers shall be set to open at a pressure not in excess of 15 p.s.i.g. Relief valves for hydraulic back pressure valves shall be set to open at a pressure not in excess of 20 p.s.i.g.

(c) Nonautomatic generators shall not be used for generating acetylene at pressures exceeding 1 p.s.i.g., and all water overflows shall be visible.

(3) Location. The space around the generator shall be ample for free, unobstructed operation and maintenance and shall permit ready adjustment and charging.

(4) Stationary acetylene generators (automatic and nonautomatic).

(a) The foundation shall be so arranged that the generator will be level and so that no excessive strain will be placed on the generator or its connections. Acetylene generators shall be grounded.

(b) Generators shall be placed where water will not freeze. The use of common salt (sodium chloride) or other

corrosive chemicals for protection against freezing is not permitted. (For heating systems see WAC 296-24-68211 (6)(k).)

(c) Except when generators are prepared in accordance with WAC 296-24-68211 (7)(i), sources of ignition shall be prohibited in outside generator houses or inside generator rooms.

(d) Water shall not be supplied through a continuous connection to the generator except when the generator is provided with an adequate open overflow or automatic water shutoff which will effectively prevent overfilling of the generator. Where a noncontinuous connection is used, the supply line shall terminate at a point not less than 2 inches above the regularly provided opening for filling so that the water can be observed as it enters the generator.

(e) Unless otherwise specifically approved, generators shall not be fitted with continuous drain connections leading to sewers, but shall discharge through an open connection into a suitably vented outdoor receptacle or residue pit which may have such connections. An open connection for the sludge drawoff is desirable to enable the generator operator to observe leakage of generating water from the drain valve or sludge cock.

(f) Each generator shall be provided with a vent pipe of Schedule 40 galvanized iron or steel, except that outside of buildings, vent pipes larger than 4 inches in diameter may be not less than 14 gage galvanized tubing or sheet steel.

(g) The escape or relief pipe shall be rigidly installed without traps and so that any condensation will drain back to the generator.

(h) The escape or relief pipe shall be carried full size to a suitable point outside the building. It shall terminate in a hood or bend located at least 12 feet above the ground, preferably above the roof, and as far away as practicable from windows or other openings into buildings and as far away as practicable from sources of ignition such as flues or chimneys and tracks used by locomotives. Generating chamber relief pipes shall not be inter-connected but shall be separately led to the outside air. The hood or bend shall be so constructed that it will not be obstructed by rain, snow, ice, insects, or birds. The outlet shall be at least 3 feet from combustible construction.

(i) Gas holders shall be constructed on the gasometer principle, the bell being suitably guided. The gas bell shall move freely without tendency to bind and shall have a clearance of at least 2 inches from the shell.

(j) The gas holder may be located in the generator room, in a separate room or out of doors. In order to prevent collapse of the gas bell or infiltration of air due to a vacuum caused by the compressor or booster pump or cooling of the gas, a compressor or booster cutoff shall be provided at a point 12 inches or more above the landing point of the bell. When the gas holder is located indoors, the room shall be ventilated in accordance with WAC 296-24-68211 (6)(j) and heated and lighted in accordance with WAC 296-24-68211 (6)(k) and (1).

(k) When the gas holder is not located within a heated building, gas holder seals shall be protected against freezing.

(l) Means shall be provided to stop the generator-feeding mechanism before the gas holder reaches the upper limit of its travel.

(m) When the gas holder is connected to only one generator, the gas capacity of the holder shall be not less than one-third of the hourly rating of the generator.

(n) If acetylene is used from the gas holder without increase in pressure at some points but with increase in pressure by a compressor or booster pump at other points, approved piping protective devices shall be installed in each supply line. The low-pressure protective device shall be located between the gas holder and the shop piping, and the medium-pressure protective device shall be located between the compressor or booster pump and the shop piping (see Figure Q-4). Approved protective equipment (designated P_F) is used to prevent: Backflow of oxygen into the fuel-gas supply system; passage of a flashback into the fuel-gas supply system; and excessive back pressure of oxygen in the fuel-gas supply system. The three functions of the protective equipment may be combined in one device or may be provided by separate devices.

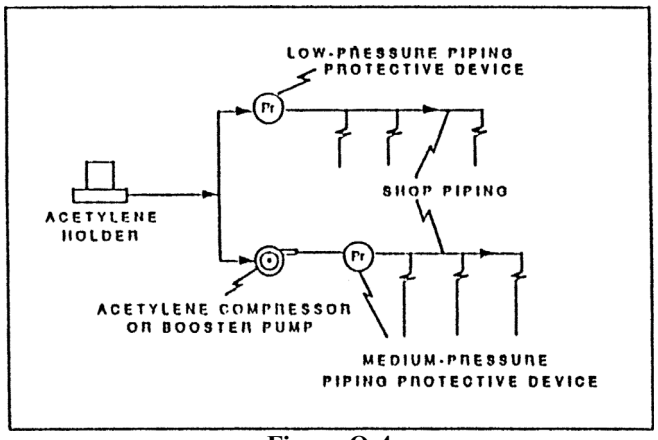

Figure Q-4

(o) The compressor or booster system shall be of an approved type.

(p) Wiring and electrical equipment in compressor or booster pump rooms or enclosures shall conform to the provisions of chapter 296-24 WAC Part L for Class I, Division 2 locations.

(q) Compressors and booster pump equipment shall be located in well-ventilated areas away from open flames, electrical or mechanical sparks, or other ignition sources.

(r) Compressor or booster pumps shall be provided with pressure relief valves which will relieve pressure exceeding 15 p.s.i.g. to a safe outdoor location as provided in WAC 296-24-68211 (2)(b), or by returning the gas to the inlet side or to the gas supply source.

(s) Compressor or booster pump discharge outlets shall be provided with approved protective equipment. (See WAC 296-24-68211 (4)(e).)

(5) Portable acetylene generators.

(a) All portable generators shall be of a type approved for portable use.

(b) Portable generators shall not be used within 10 feet of combustible material other than the floor.

(c) Portable generators shall not be used in rooms of total volume less than 35 times the total gas-generating capacity per charge of all generators in the room. Generators shall not be used in rooms having a ceiling height of less than 10 feet.

(To obtain the gas-generating capacity in cubic feet per charge, multiply the pounds of carbide per charge by 4.5.)

(d) Portable generators shall be protected against freezing. The use of salt or other corrosive chemical to prevent freezing is prohibited.

(e) Portable generators shall be cleaned and recharged and the air mixture blown off outside buildings.

(f) When charged with carbide, portable generators shall not be moved by crane or derrick.

(g) When not in use, portable generators shall not be stored in rooms in which open flames are used unless the generators contain no carbide and have been thoroughly purged of acetylene. Storage rooms shall be well ventilated.

(h) When portable acetylene generators are to be transported and operated on vehicles, they shall be securely anchored to the vehicles. If transported by truck, the motor shall be turned off during charging, cleaning, and generating periods.

(i) Portable generators shall be located at a safe distance from the welding position so that they will not be exposed to sparks, slag, or misdirection of the torch flame or overheating from hot materials or processes.

(6) Outside generator houses and inside generator rooms for stationary acetylene generators.

(a) No opening in any outside generator house shall be located within 5 feet of any opening in another building.

(b) Walls, floors and roofs of outside generator houses shall be of noncombustible construction.

(c) When a part of the generator house is to be used for the storage or manifolding of oxygen cylinders, the space to be so occupied shall be separated from the generator carbide storage section by partition walls continuous from floor to roof or ceiling, of the type of construction stated in WAC 296-24-68211 (6)(h). Such separation walls shall be without openings and shall be joined to the floor, other walls and ceiling or roof in a manner to effect a permanent gas-tight joint.

(d) Exit doors shall be located so as to be readily accessible in case of emergency.

(e) Explosion venting for outside generator houses and inside generator rooms shall be provided in exterior walls or roofs. The venting areas shall be equal to not less than 1 square foot per 50 cubic feet of room volume and may consist of any one or any combination of the following: Walls of light, noncombustible material preferably single-thickness, single-strength glass; lightly fastened hatch covers; lightly fastened swinging doors in exterior walls opening outward; lightly fastened walls or roof designed to relieve at a maximum pressure of 25 pounds per square foot.

(f) The installation of acetylene generators within buildings shall be restricted to buildings not exceeding one story in height: Provided, however, That this will not be construed as prohibiting such installations on the roof or top floor of a building exceeding such height.

(g) Generators installed inside buildings shall be enclosed in a separate room of ample size.

(h) The walls, partitions, floors, and ceilings of inside generator rooms shall be of noncombustible construction having a fire-resistance rating of at least 1 hour. The walls or partitions shall be continuous from floor to ceiling and shall be securely anchored. At least one wall of the room shall be an exterior wall.

(i) Openings from an inside generator room to other parts of the building shall be protected by a swinging type, self-closing fire door for a Class B opening and having a rating of at least 1 hour. Windows in partitions shall be wired glass and approved metal frames with fixed sash. Installation shall be in accordance with the Standard for the Installation of Fire Doors and Windows, NFPA 80-1970.

(j) Inside generator rooms or outside generator houses shall be well ventilated with vents located at floor and ceiling levels.

(k) Heating shall be by steam, hot water, enclosed electrically heated elements or other indirect means. Heating by flames or fires shall be prohibited in outside generator houses or inside generator rooms, or in any enclosure communicating with them.

(l) Generator houses or rooms shall have natural light during daylight hours. Where artificial lighting is necessary it shall be restricted to electric lamps installed in a fixed position. Unless specifically approved for use in atmospheres containing acetylene, such lamps shall be provided with enclosures of glass or other noncombustible material so designed and constructed as to prevent gas vapors from reaching the lamp or socket and to resist breakage. Rigid conduit with threaded connections shall be used.

(m) Lamps installed outside of wired-glass panels set in gas-tight frames in the exterior walls or roof of the generator house or room are acceptable.

(n) Electric switches, telephones, and all other electrical apparatus which may cause a spark, unless specifically approved for use inside acetylene generator rooms, shall be located outside the generator house or in a room or space separated from the generator room by a gas-tight partition, except that where the generator system is designed so that no carbide fill opening or other part of the generator is open to the generator house or room during the operation of the generator, and so that residue is carried in closed piping from the residue discharge valve to a point outside the generator house or room, electrical equipment in the generator house or room shall conform to the provisions of the chapter 296-24 WAC Part L for Class I, Division 2 locations.

(7) Maintenance and operation.

(a) Unauthorized persons shall not be permitted in outside generator houses or inside generator rooms.

(b) Operating instructions shall be posted in a conspicuous place near the generator or kept in a suitable place available for ready reference.

(c) When recharging generators the order of operations specified in the instructions supplied by the manufacturer shall be followed.

(d) In the case of batch-type generators, when the charge of carbide is exhausted and before additional carbide is added, the generating chamber shall always be flushed out with water, renewing the water supply in accordance with the instruction card furnished by the manufacturer.

(e) The water-carbide residue mixture drained from the generator shall not be discharged into sewer pipes or stored in areas near open flames. Clear water from residue settling pits may be discharged into sewer pipes.

(f) The carbide added each time the generator is recharged shall be sufficient to refill the space provided for

carbide without ramming the charge. Steel or other ferrous tools shall not be used in distributing the charge.

(g) Generator water chambers shall be kept filled to proper level at all times except while draining during the recharging operation.

(h) Whenever repairs are to be made or the generator is to be charged or carbide is to be removed, the water chamber shall be filled to the proper level.

(i) Previous to making repairs involving welding, soldering, or other hot work or other operations which produce a source of ignition, the carbide charge and feed mechanism shall be completely removed. All acetylene shall be expelled by completely flooding the generator shell with water and the generator shall be disconnected from the piping system. The generator shall be kept filled with water, if possible, or positioned to hold as much water as possible.

(j) Hot repairs shall not be made in a room where there are other generators unless all the generators and piping have been purged of acetylene. Hot repairs should preferably be made out of doors.

[Statutory Authority: Chapter 49.17 RCW. 91-24-017 (Order 91-07), § 296-24-68211, filed 11/22/91, effective 12/24/91; Order 73-5, § 296-24-68211, filed 5/9/73 and Order 73-4, § 296-24-68211, filed 5/7/73.]

WAC 296-24-68213 Calcium carbide storage. (1) Packaging.

(a) Calcium carbide shall be contained in metal packages of sufficient strength to prevent rupture. The packages shall be provided with a screw top or equivalent. These packages shall be constructed water- and air-tight. Solder shall not be used in such a manner that the package will fail if exposed to fire.

(b) Packages containing calcium carbide shall be conspicuously marked "calcium carbide-dangerous if not kept dry" or with equivalent warning.

(c) Caution: Metal tools, even the so-called spark resistant type may cause ignition of an acetylene and air mixture when opening carbide containers.

(d) Sprinkler systems shall not be installed in carbide storage rooms.

(2) Storage indoors.

(a) Calcium carbide in quantities not to exceed 600 pounds may be stored indoors in dry, waterproof, and well-ventilated locations.

(b) Calcium carbide not exceeding 600 pounds may be stored indoors in the same room with fuel-gas cylinders.

(c) Packages of calcium carbide, except for one of each size, shall be kept sealed. The seals shall not be broken when there is carbide in excess of 1 pound in any other unsealed package of the same size of carbide in the room.

(d) Calcium carbide exceeding 600 pounds but not exceeding 5,000 pounds shall be stored:

(i) In accordance with (2)(e) of this section.

(ii) In an inside generator room or outside generator house; or

(iii) In a separate room in a one-story building which may contain other occupancies, but without cellar or basement beneath the carbide storage section. Such rooms shall be constructed in accordance with WAC 296-24-68211 (6)(h) and (i) and ventilated in accordance with WAC 296-24-68211 (6)(j). These rooms shall be used for no other purpose.

(e) Calcium carbide in excess of 5,000 pounds shall be stored in one-story buildings without cellar or basement and used for no other purpose, or in outside generator houses. The location of such storage buildings shall be away from congested mercantile and manufacturing districts. If the storage building is of noncombustible construction, it may adjoin other one-story buildings if separated therefrom by unpierced firewalls; if it is detached less than 10 feet from such building or buildings, there shall be no opening in any of the mutually exposing sides of such buildings within 10 feet. If the storage building is of combustible construction, it shall be at least 20 feet from any other one- or two-story building, and at least 30 feet from any other building exceeding two stories.

(3) Storage outdoors.

(a) Calcium carbide in unopened metal containers may be stored outdoors.

(b) Carbide containers to be stored outdoors shall be examined to make sure that they are airtight and watertight. Periodic reexaminations shall be made for rusting or other damage to a container that might affect its water or air tightness.

(c) The bottom tier of each row shall be placed on wooden planking or equivalent so that the containers will not come in contact with the ground or groundwater.

(d) Storage areas shall be at least 10 feet from lines of adjoining property that may be built upon.

(e) Containers of carbide which have been in storage the longest shall be used first.

[Order 73-5, § 296-24-68213, filed 5/9/73 and Order 73-4, § 296-24-68213, filed 5/7/73.]

WAC 296-24-68215 Public exhibitions and demonstrations. (1) Installation requirements. Installation and operation of welding, cutting, and related equipment shall be done by, or under the supervision of, a competent operator to insure the personal protection of viewers and demonstrators as well as the protection from fire, of materials in and around the site and the building itself.

(2) Procedures.

(a) Cylinders containing compressed gases for use at the site shall not be charged in excess of one-half their maximum permissible content. (Cylinders of nonliquefied gases and acetylene shall be charged to not more than one-half their maximum permissible charged pressure in p.s.i.g. Cylinders of liquefied gases shall be charged to not more than one-half the maximum permissible capacity in pounds.)

(b) Cylinders located at the site shall be connected for use except that enough additional cylinders may be stored at the site to furnish approximately 1 day's consumption of each gas used. Other cylinders shall be stored, in an approved storage area, preferably outdoors, but this storage area shall not be located near a building exit.

(c) Cylinders in excess of 40 pounds total weight being transported to or from the site shall be carried on a hand or motorized truck.

(d) The site shall be constructed, equipped, and operated in such a manner that the demonstration will be carried out so as to minimize the possibility of injury to viewers.

(e) Sites involving the use of compressed gases shall be located so as not to interfere with the egress of people during an emergency.

(f) The fire department shall be notified in advance of such use of the site.

(g) Each site shall be provided with a portable fire extinguisher of appropriate size and type and with a pail of water.

Note: For additional requirements relating to portable fire extinguishers see WAC 296-800-300.

(h) The public and combustible materials at the site shall be protected from flames, sparks, and molten metal.

(i) Hoses shall be located and protected so that they will not be physically damaged.

(j) Cylinder valves shall be closed when equipment is unattended.

(k) Where caps are provided for valve protection, such caps shall be in place except when the cylinders are in service or connected ready for service.

(l) Cylinders shall be located or secured so that they cannot be knocked over.

[Statutory Authority: RCW 49.17.010, [49.17].040, and [49.17].050. 01-17-033, § 296-24-68215, filed 8/8/01, effective 9/1/01; Order 73-5, § 296-24-68215, filed 5/9/73 and Order 73-4, § 296-24-68215, filed 5/7/73.]

WAC 296-24-685 Application, installation, and operation of arc welding and cutting equipment.

[Order 73-5, § 296-24-685, filed 5/9/73 and Order 73-4, § 296-24-685, filed 5/7/73.]

WAC 296-24-68501 General. (1) Equipment selection. Welding equipment shall be chosen for safe application to the work to be done as specified in WAC 296-24-68503.

(2) Installation. Welding equipment shall be installed safely as specified by WAC 296-24-68505.

(3) Instruction. Workers designated to operate arc welding equipment shall have been properly instructed and qualified to operate such equipment as specified in WAC 296-24-68507.

[Statutory Authority: Chapter 49.17 RCW. 94-15-096 (Order 94-07), § 296-24-68501, filed 7/20/94, effective 9/20/94; Order 73-5, § 296-24-68501, filed 5/9/73 and Order 73-4, § 296-24-68501, filed 5/7/73.]

WAC 296-24-68503 Application of arc welding equipment.

Note: Assurance of consideration of safety in design is obtainable by choosing apparatus complying with the Requirements for Electric Arc-Welding Apparatus, NEMA EW-1-1962, National Electrical Manufacturers Association or the Safety Standard for Transformer-Type Arc-Welding Machines, ANSI C33.2-1956, Underwriters' Laboratories.

(1) Environmental conditions.

(a) Standard machines for arc welding service shall be designed and constructed to carry their rated load with rated temperature rises where the temperature of the cooling air does not exceed 40°C (104°F) and where the altitude does not exceed 3,300 feet, and shall be suitable for operation in atmospheres containing gases, dust, and light rays produced by the welding arc.

(b) Unusual service conditions may exist, and in such circumstances machines shall be especially designed to safely meet the requirements of the service. Chief among these conditions are exposure to:

(i) Unusually corrosive fumes.

(ii) Steam or excessive humidity.

(iii) Excessive oil vapor.

(iv) Flammable gases.

(v) Abnormal vibration or shock.

(vi) Excessive dust.

(vii) Weather.

(viii) Unusual seacoast or shipboard conditions.

(2) Voltage. Open circuit (no load) voltages of arc welding and cutting machines should be as low as possible consistent with satisfactory welding or cutting being done. The following limits shall not be exceeded:

(a) Alternating-current machines.

(i) Manual arc welding and cutting—80 volts.

(ii) Automatic (machine or mechanized) arc welding and cutting—100 volts.

(b) Direct-current machines.

(i) Manual arc welding and cutting—100 volts.

(ii) Automatic (machine or mechanized) arc welding and cutting—100 volts.

(c) When special welding and cutting processes require values of open circuit voltages higher than the above, means shall be provided to prevent the operator from making accidental contact with the high voltage by adequate insulation or other means.

Note: For a.c. welding under wet conditions or warm surroundings where perspiration is a factor, the use of reliable automatic controls for reducing no load voltage is recommended to reduce the shock hazard.

(3) Design.

(a) A controller integrally mounted in an electric motor driven welder shall have capacity for carrying rated motor current, shall be capable of making and interrupting stalled rotor current of the motor, and may serve as the running overcurrent device if provided with the number of over-current units as specified by chapter 296-24 WAC Part L, and WAC 296-800-280. Starters with magnetic undervoltage release should be used with machines installed more than one to a circuit to prevent circuit overload caused by simultaneously starting of several motors upon return of voltage.

(b) On all types of arc welding machines, control apparatus shall be enclosed except for the operating wheels, levers, or handles.

Note: Control handles and wheels should be large enough to be easily grasped by a gloved hand.

(c) Input power terminals, tap change devices and live metal parts connected to input circuits shall be completely enclosed and accessible only by means of tools.

(d) Terminals for welding leads should be protected from accidental electrical contact by employees or by metal objects i.e., vehicles, crane hooks, etc. Protection may be obtained by use of: Dead-front receptacles for plug connections; recessed openings with nonremovable hinged covers; heavy insulating sleeving or taping or other equivalent electrical and mechanical protection. If a welding lead terminal which is intended to be used exclusively for connection to the work is connected to the grounded enclosure, it must be done by a conductor at least two AWG sizes smaller than the grounding conductor and the terminal shall be marked to indicate that it is grounded.

(e) No connections for portable control devices such as push buttons to be carried by the operator shall be connected

to an a.c. circuit of higher than 120 volts. Exposed metal parts of portable control devices operating on circuits above 50 volts shall be grounded by a grounding conductor in the control cable.

(f) Auto transformers or a.c. reactors shall not be used to draw welding current directly from any a.c. power source having a voltage exceeding 80 volts.

[Statutory Authority: RCW 49.17.010, [49.17].040, and [49.17].050. 01-11-038, § 296-24-68503, filed 5/9/01, effective 9/1/01. Statutory Authority: Chapter 49.17 RCW. 91-24-017 (Order 91-07), § 296-24-68503, filed 11/22/91, effective 12/24/91; Order 73-5, § 296-24-68503, filed 5/9/73 and Order 73-4, § 296-24-68503, filed 5/7/73.]

WAC 296-24-68505 Installation of arc welding equipment. (1) General. Installation including power supply shall be according to the requirements of chapter 296-24 WAC Part L, and WAC 296-800-280.

(2) Grounding.

(a) The frame or case of the welding machine (except engine-driven machines) shall be grounded under the conditions and according to the methods prescribed in chapter 296-24 WAC Part L, and WAC 296-800-280.

(b) Conduits containing electrical conductors shall not be used for completing a work-lead circuit. Pipelines shall not be used as a permanent part of a work-lead circuit, but may be used during construction, extension or repair providing current is not carried through threaded joints, flanged bolted joints, or caulked joints and that special precautions are used to avoid sparking at connection of the work-lead cable.

(c) Chains, wire ropes, cranes, hoists, and elevators shall not be used to carry welding current.

(d) Where a structure, conveyor, or fixture is regularly employed as a welding current return circuit, joints shall be bonded or provided with adequate current collecting devices and appropriate periodic inspection should be conducted to ascertain that no condition of electrolysis or shock, or fire hazard exists by virtue of such use.

(e) All ground connections shall be checked to determine that they are mechanically strong and electrically adequate for the required current.

(3) Supply connections and conductors.

(a) A disconnecting switch or controller shall be provided at or near each welding machine which is not equipped with such a switch or controller mounted as an integral part of the machine. The switch shall be according to chapter 296-24 WAC Part L, and WAC 296-800-280. Overcurrent protection shall be provided as specified in chapter 296-24 WAC Part L, and WAC 296-800-280. A disconnect switch with overload protection or equivalent disconnect and protection means, permitted by chapter 296-24 WAC Part L, and WAC 296-800-280, shall be provided for each outlet intended for connection to a portable welding machine.

(b) For individual welding machines, the rated current-carrying capacity of the supply conductors shall be not less than the rated primary current of the welding machines.

(c) For groups of welding machines, the rated current-carrying capacity of conductors may be less than the sum of the rated primary currents of the welding machines supplied. The conductor rating shall be determined in each case according to the machine loading based on the use to be made of each welding machine and the allowance permissible in the event that all the welding machines supplied by the conductors will not be in use at the same time.

(d) In operations involving several welders on one structure, d.c. welding process requirements may require the use of both polarities; or supply circuit limitations for a.c. welding may require distribution of machines among the phases of the supply circuit. In such cases no load voltages between electrode holders will be 2 times normal in d.c. or 1, 1.4, 1.73, or 2 times normal on a.c. machines. Similar voltage differences will exist if both a.c. and d.c. welding are done on the same structure.

(i) All d.c. machines shall be connected with the same polarity.

(ii) All a.c. machines shall be connected to the same phase of the supply circuit and with the same instantaneous polarity.

[Statutory Authority: RCW 49.17.010, [49.17].040, and [49.17].050. 01-11-038, § 296-24-68505, filed 5/9/01, effective 9/1/01. Statutory Authority: Chapter 49.17 RCW. 91-24-017 (Order 91-07), § 296-24-68505, filed 11/22/91, effective 12/24/91; Order 73-5, § 296-24-68505, filed 5/9/73 and Order 73-4, § 296-24-68505, filed 5/7/73.]

WAC 296-24-68507 Operation and maintenance. (1) General. Workers assigned to operate or maintain arc welding equipment shall be acquainted with the requirements of WAC 296-24-68501 through 296-24-68505, 296-24-69501 through 296-24-69507, 296-24-70001 through 296-24-70007 and 296-24-71501 through 296-24-71525; if doing gas-shielded arc welding, also Recommended Safe Practices for Gas-Shielded Arc Welding, A6.1-1966, American Welding Society.

(2) Machine hook up. Before starting operations all connections to the machine shall be checked to make certain they are properly made. The work lead shall be firmly attached to the work; magnetic work clamps shall be freed from adherent metal particles of spatter on contact surfaces. Coiled welding cable shall be spread out before use to avoid serious overheating and damage to insulation.

(3) Grounding. Grounding of the welding machine frame shall be checked. Special attention shall be given to safety ground connections of portable machines.

(4) Leaks. There shall be no leaks of cooling water, shielding gas or engine fuel.

(5) Switches. It shall be determined that proper switching equipment for shutting down the machine is provided.

(6) Manufacturers' instructions. Printed rules and instructions covering operation of equipment supplied by the manufacturers shall be strictly followed.

(7) Electrode holders. Electrode holders when not in use shall be so placed that they cannot make electrical contact with persons, conducting objects, fuel or compressed gas tanks.

(8) Electric shock. Cables with splices within 10 feet of the holder shall not be used. The welder should not coil or loop welding electrode cable around parts of the body.

(9) Maintenance.

(a) The operator should report any equipment defect or safety hazard to the supervisor and the use of the equipment shall be discontinued until its safety has been assured. Repairs shall be made only by qualified personnel.

(b) Machines which have become wet shall be thoroughly dried and tested before being used.

(c) Work and electrode lead cables should be frequently inspected for wear and damage. Cables with damaged insulation or exposed bare conductors shall be replaced. Joining lengths of work and electrode cables shall be done by the use of connecting means specifically intended for the purpose. The connecting means shall have insulation adequate for the service conditions.

[Statutory Authority: Chapter 49.17 RCW. 94-15-096 (Order 94-07), § 296-24-68507, filed 7/20/94, effective 9/20/94; Order 73-5, § 296-24-68507, filed 5/9/73 and Order 73-4, § 296-24-68507, filed 5/7/73.]

WAC 296-24-690 Installation and operation of resistance welding equipment.

[Order 73-5, § 296-24-690, filed 5/9/73 and Order 73-4, § 296-24-690, filed 5/7/73.]

WAC 296-24-69001 General. (1) Installation. All equipment shall be installed by a qualified electrician in conformance with chapter 296-24 WAC Part L, and WAC 296-800-280. There shall be a safety-type disconnecting switch or a circuit breaker or circuit interrupter to open each power circuit to the machine, conveniently located at or near the machine, so that the power can be shut off when the machine or its controls are to be serviced.

(2) Thermal protection. Ignitron tubes used in resistance welding equipment shall be equipped with a thermal protection switch.

(3) Personnel. Workers designated to operate resistance welding equipment shall have been properly instructed and judged competent to operate such equipment.

(4) Guarding. Controls of all automatic or air and hydraulic clamps shall be arranged or guarded to prevent the operator from accidentally activating them.

[Statutory Authority: RCW 49.17.010, [49.17].040, and [49.17].050. 01-11-038, § 296-24-69001, filed 5/9/01, effective 9/1/01. Statutory Authority: Chapter 49.17 RCW. 94-15-096 (Order 94-07), § 296-24-69001, filed 7/20/94, effective 9/20/94; 91-24-017 (Order 91-07), § 296-24-69001, filed 11/22/91, effective 12/24/91; Order 73-5, § 296-24-69001, filed 5/9/73 and Order 73-4, § 296-24-69001, filed 5/7/73.]

WAC 296-24-69003 Spot and seam welding machines (nonportable). (1) Voltage. All external weld initiating control circuits shall operate on low voltage, not over 120 volts.

(2) Capacitor welding. Stored energy or capacitor discharge type of resistance welding equipment and control panels involving high voltage (over 550 volts) shall be suitably insulated and protected by complete enclosures, all doors of which shall be provided with suitable interlocks and contacts wired into the control circuit (similar to elevator interlocks). Such interlocks or contacts shall be so designed as to effectively interrupt power and short circuit all capacitors when the door or panel is open. A manually operated switch or suitable positive device shall be installed, in addition to the mechanical interlocks or contacts, as an added safety measure assuring absolute discharge of all capacitors.

(3) Interlocks. All doors and access panels of all resistance welding machines and control panels shall be kept locked and interlocked to prevent access, by unauthorized persons, to live portions of the equipment.

(4) Guarding. All press welding machine operations, where there is a possibility of the operator's fingers being under the point of operation, shall be effectively safeguarded according to the machine safety requirements in WAC 296-806-20044 through 296-806-20054. All chains, gears, operating bus linkage, and belts shall be protected by adequate guards, in accordance with the machine safety requirements in WAC 296-806-20042.

(5) Shields. The hazard of flying sparks shall be, wherever practical, eliminated by installing a shield guard of safety glass or suitable fire-resistant plastic at the point of operation. Additional shields or curtains shall be installed as necessary to protect passing persons from flying sparks. (See WAC 296-24-70003 (1)(c).)

(6) Foot switches. All foot switches shall be guarded to prevent accidental operation of the machine.

(7) Stop buttons. Two or more safety emergency stop buttons shall be provided on all special multispot welding machines, including 2-post and 4-post weld presses.

(8) Safety pins. On large machines, four safety pins with plugs and receptacles (one in each corner) shall be provided so that when safety pins are removed and inserted in the ram or platen, the press becomes inoperative.

(9) Grounding. Where technically practical, the secondary of all welding transformers used in multispot, protection and seam welding machines shall be grounded. This may be done by permanently grounding one side of the welding secondary current circuit. Where not technically practical, a center tapped grounding reactor connected across the secondary or the use of a safety disconnect switch in conjunction with the welding control are acceptable alternates. Safety disconnect shall be arranged to open both sides of the line when welding current is not present.

[Statutory Authority: RCW 49.17.010, 49.17.040, 49.17.050, and 49.17.060. 04-14-028, § 296-24-69003, filed 6/29/04, effective 1/1/05; Order 73-5, § 296-24-69003, filed 5/9/73 and Order 73-4, § 296-24-69003, filed 5/7/73.]

WAC 296-24-69005 Portable welding machines. (1) Counter-balance. All portable welding guns shall have suitable counter-balanced devices for supporting the guns, including cables, unless the design of the gun or fixture makes counterbalancing impractical or unnecessary.

(2) Safety chains. All portable welding guns, transformers and related equipment that is suspended from overhead structures, eye beams, trolleys, etc., shall be equipped with safety chains or cables. Safety chains or cables shall be capable of supporting the total shock load in the event of failure of any component of the supporting system.

(3) Clevis. When trolleys are used to support portable welding equipment, they shall be equipped with suitable forged steel clevis for the attachment of safety chains. Each clevis shall be capable of supporting the total shock load of the suspended equipment in the event of trolley failure.

(4) Switch guards. All initiating switches, including retraction and dual schedule switches, located on the portable welding gun shall be equipped with suitable guards capable of preventing accidental initiation through contact with fix-

turing, operator's clothing, etc. Initiating switch voltage shall not exceed 24 volts.

(5) Moving holder. The movable holder, where it enters the gun frame, shall have sufficient clearance to prevent the shearing of fingers carelessly placed on the operating movable holder.

(6) Grounding. The secondary and case of all portable welding transformers shall be grounded. Secondary grounding may be by center tapped secondary or by a center tapped grounding reactor connected across the secondary.

[Order 73-5, § 296-24-69005, filed 5/9/73 and Order 73-4, § 296-24-69005, filed 5/7/73.]

WAC 296-24-69007 Flash welding equipment. (1) Ventilation and flash guard. Flash welding machines shall be equipped with a hood to control flying flash. In cases of high production, where materials may contain a film of oil and where toxic elements and metal fumes are given off, ventilation shall be provided in accordance with WAC 296-24-71501 through 296-24-71525.

(2) Fire curtains. For the protection of the operators of nearby equipment, fire-resistant curtains or suitable shields shall be set up around the machine and in such a manner that the operator's movements are not hampered.

(3) If the welding process cannot be isolated, all persons who may be exposed to the hazard of arc flash shall be properly protected.

[Order 74-27, § 296-24-69007, filed 5/7/74; Order 73-5, § 296-24-69007, filed 5/9/73 and Order 73-4, § 296-24-69007, filed 5/7/73.]

WAC 296-24-69009 Hazards and precautions. A job hazard analysis shall be made, by qualified personnel, of the operations to be performed on each welding machine to determine the safeguards and personal protective equipment that shall be used for each job.

[Order 73-5, § 296-24-69009, filed 5/9/73 and Order 73-4, § 296-24-69009, filed 5/7/73.]

WAC 296-24-69011 Maintenance. Periodic inspection shall be made by qualified maintenance personnel, and records of the same maintained. The operator shall be instructed to report any equipment defects to the supervisor and the use of the equipment shall be discontinued until safety repairs have been completed.

[Statutory Authority: Chapter 49.17 RCW. 94-15-096 (Order 94-07), § 296-24-69011, filed 7/20/94, effective 9/20/94; Order 73-5, § 296-24-69011, filed 5/9/73 and Order 73-4, § 296-24-69011, filed 5/7/73.]

WAC 296-24-695 Fire prevention and protection.

[Order 73-5, § 296-24-695, filed 5/9/73 and Order 73-4, § 296-24-695, filed 5/7/73.]

WAC 296-24-69501 Basic precautions. For elaboration of these basic precautions and of the special precautions of WAC 296-24-69503 as well as a delineation of the fire protection and prevention responsibilities of welders and cutters, their supervisors (including outside contractors) and those in management on whose property cutting and welding is to be performed, see, Standard for Fire Prevention in Use of Cutting and Welding Processes, NFPA Standard 51B, 1962. The basic precautions for fire prevention in welding or cutting work are:

(1) Fire hazards. If the object to be welded or cut cannot readily be moved, all movable fire hazards in the vicinity shall be taken to a safe place.

(2) Guards. If the object to be welded or cut cannot be moved and if all the fire hazards cannot be removed, then guards shall be used to confine the heat, sparks, and slag, and to protect the immovable fire hazards.

(3) Restrictions. If the requirements stated in WAC 296-24-69501 (1) and (2) cannot be followed then welding and cutting shall not be performed.

[Order 73-5, § 296-24-69501, filed 5/9/73 and Order 73-4, § 296-24-69501, filed 5/7/73.]

WAC 296-24-69503 Special precautions. When the nature of the work to be performed falls within the scope of WAC 296-24-69501(2) certain additional precautions may be necessary:

(1) Combustible material. Wherever there are floor openings or cracks in the flooring that cannot be closed, precautions shall be taken so that no readily combustible materials on the floor below will be exposed to sparks which might drop through the floor. The same precautions shall be observed with regard to cracks or holes in walls, open doorways and open or broken windows.

(2) Fire extinguishers. Suitable fire extinguishing equipment shall be maintained in a state of readiness for instant use. Such equipment may consist of pails of water, buckets of sand, hose or portable extinguishers depending upon the nature and quantity of the combustible material exposed.

(3) Fire watch.

(a) Fire watchers shall be required whenever welding or cutting is performed in locations where other than a minor fire might develop, or any of the following conditions exist:

(i) Appreciable combustible material, in building construction or contents, closer than 35 feet to the point of operation.

(ii) Appreciable combustibles are more than 35 feet away but are easily ignited by sparks.

(iii) Wall or floor openings within a 35-foot radius expose combustible material in adjacent areas including concealed spaces in walls or floors.

(iv) Combustible materials are adjacent to the opposite side of metal partitions, walls, ceilings, or roofs and are likely to be ignited by conduction or radiation.

(b) Fire watchers shall have fire extinguishing equipment readily available and be trained in its use. They shall be familiar with facilities for sounding an alarm in the event of a fire. They shall watch for fires in all exposed areas, try to extinguish them only when obviously within the capacity of the equipment available, or otherwise sound the alarm. A fire watch shall be maintained for at least a half hour after completion of welding or cutting operations to detect and extinguish possible smoldering fires.

(4) Authorization. Before cutting or welding is permitted, the area shall be inspected by the individual responsible for authorizing cutting and welding operations. The responsible individual shall designate precautions to be followed in granting authorization to proceed, preferably in the form of a written permit.

(5) Floors. Where combustible materials such as paper clippings, wood shavings, or textile fibers are on the floor, the floor shall be swept clean for a radius of 35 feet. Combustible floors shall be kept wet, covered with damp sand, or protected by fire-resistant shields. Where floors have been wet down, personnel operating arc welding or cutting equipment shall be protected from possible shock.

(6) Prohibited areas. Cutting or welding shall not be permitted in the following situations:

(a) In areas not authorized by management.

(b) In sprinklered buildings while such protection is impaired.

(c) In the presence of explosive atmospheres (mixtures of flammable gases, vapors, liquids, or dusts with air), or explosive atmospheres that may develop inside uncleaned or improperly prepared tanks or equipment which have previously contained such materials, or that may develop in areas with an accumulation of combustible dusts.

(d) In areas near the storage of large quantities of exposed, readily ignitable materials such as bulk sulphur, baled paper, or cotton.

(7) Relocation of combustibles. Where practicable, all combustibles shall be relocated at least 35 feet from the work site. Where relocation is impracticable, combustibles shall be protected with flameproofed covers or otherwise shielded with metal or asbestos guards or curtains. Edges of covers at the floor should be tight to prevent sparks from going under them. This precaution is also important at overlaps where several covers are used to protect a large pile.

(8) Ducts. Ducts and conveyor systems that might carry sparks to distant combustibles shall be suitably protected or shut down.

(9) Combustible walls. Where cutting or welding is done near walls, partitions, ceiling or roof of combustible construction, fire-resistant shields or guards shall be provided to prevent ignition.

(10) Noncombustible walls. If welding is to be done on a metal wall, partition, ceiling or roof, precautions shall be taken to prevent ignition of combustibles on the other side, due to conduction or radiation, preferably by relocating combustibles. Where combustibles are not relocated, a fire watch on the opposite side from the work shall be provided.

(11) Combustible cover. Welding shall not be attempted on a metal partition, wall, ceiling or roof having a combustible covering nor on walls or partitions of combustible sandwich-type panel construction.

(12) Pipes. Cutting or welding on pipes or other metal in contact with combustible walls, partitions, ceilings or roofs shall not be undertaken if the work is close enough to cause ignition by conduction.

(13) Management. Management shall recognize its responsibility for the safe usage of cutting and welding equipment on its property and:

(a) Based on fire potentials of plant facilities, establish areas for cutting and welding, and establish procedures for cutting and welding, in other areas.

(b) Designate an individual responsible for authorizing cutting and welding operations in areas not specifically designed for such processes.

(c) Insist that cutters or welders and their supervisors are suitably trained in the safe operation of their equipment and the safe use of the process.

(d) Advise all contractors about flammable materials or hazardous conditions of which they may not be aware.

(14) Supervisor. The supervisor:

(a) Shall be responsible for the safe handling of the cutting or welding equipment and the safe use of the cutting or welding process.

(b) Shall determine the combustible materials and hazardous areas present or likely to be present in the work location.

(c) Shall protect combustibles from ignition by the following:

(i) Have the work moved to a location free from dangerous combustibles.

(ii) If the work cannot be moved, have the combustibles moved to a safe distance from the work or have the combustibles properly shielded against ignition.

(iii) See that cutting and welding are so scheduled that plant operations that might expose combustibles to ignition are not started during cutting or welding.

(d) Shall secure authorization for the cutting or welding operations from the designated management representative.

(i) Shall determine that the cutter or welder secures their approval that conditions are safe before going ahead.

(ii) Shall determine that fire protection and extinguishing equipment are properly located at the site.

(iii) Shall ensure fire watches are available at the site when required.

(15) Fire prevention precautions. Cutting or welding shall be permitted only in areas that are or have been made fire safe. Within the confines of an operating plant or building, cutting and welding should preferably be done in a specific area designed for such work, such as a maintenance shop or a detached outside location. Such areas should be of noncombustible or fire-resistive construction, essentially free of combustible and flammable contents, and suitably segregated from adjacent areas. When work cannot be moved practically, as in most construction work, the area shall be made safe by removing combustibles or protecting combustibles from ignition sources.

[Statutory Authority: Chapter 49.17 RCW. 94-15-096 (Order 94-07), § 296-24-69503, filed 7/20/94, effective 9/20/94; Order 73-5, § 296-24-69503, filed 5/9/73 and Order 73-4, § 296-24-69503, filed 5/7/73.]

WAC 296-24-69505 Welding or cutting containers. (1) Used containers. No welding, cutting, or other hot work shall be performed on used drums, barrels, tanks or other containers until they have been cleaned so thoroughly as to make absolutely certain that there are no flammable materials present or any substances such as greases, tars, acids, or other materials which when subjected to heat, might produce flammable or toxic vapors. Any pipe lines or connections to the drum or vessel shall be disconnected or blanked.

(2) Venting and purging. All hollow spaces, cavities or containers shall be vented to permit the escape of air or gases before preheating, cutting or welding. Purging with inert gas is recommended.

[Order 73-5, § 296-24-69505, filed 5/9/73 and Order 73-4, § 296-24-69505, filed 5/7/73.]

WAC 296-24-69507 Confined spaces. (1) Accidental contact. When arc welding is to be suspended for any substantial period of time such as during lunch or overnight, all electrodes shall be removed from the holders and the holders carefully located so that accidental contact cannot occur and the machine be disconnected from the power source.

(2) Torch valve. In order to eliminate the possibility of gas escaping through leaks or improperly closed valves, when gas welding or cutting, the torch valves shall be closed and the gas supply to the torch positively shut off at some point outside the confined area whenever the torch is not to be used for a substantial period of time, such as during lunch hour or overnight. Where practicable, the torch and hose shall also be removed from the confined space.

[Order 73-5, § 296-24-69507, filed 5/9/73 and Order 73-4, § 296-24-69507, filed 5/7/73.]

WAC 296-24-700 Protection of employees.

[Order 73-5, § 296-24-700, filed 5/9/73 and Order 73-4, § 296-24-700, filed 5/7/73.]

WAC 296-24-70001 General. (1) Railing. A welder or helper working on platforms, scaffolds, or runways shall be protected against falling. This may be accomplished by the use of railings, safety belts, life lines, or some other equally effective safeguards.

(2) Welding cable. Welders shall place welding cable and other equipment so that it is clear of passageways, ladders, and stairways.

[Order 73-5, § 296-24-70001, filed 5/9/73 and Order 73-4, § 296-24-70001, filed 5/7/73.]

WAC 296-24-70003 Eye protection. (1) Selection.

(a) Helmets or hand shields shall be used during all arc welding or arc cutting operations, excluding submerged arc welding.

Goggles should also be worn during arc welding or cutting operations to provide protection from injurious rays from adjacent work, and from flying objects. The goggles may have either clear or colored glass, depending upon the amount of exposure to adjacent welding operations. Helpers or attendants shall be provided with proper eye protection.

(b) Goggles or other suitable eye protection shall be used during all gas welding or oxygen cutting operations. Spectacles without side shields, with suitable filter lenses are permitted for use during gas welding operations on light work, for torch brazing or for inspection.

(c) All operators and attendants of resistance welding or resistance brazing equipment shall use transparent face shields or goggles, depending on the particular job, to protect their faces or eyes, as required.

(d) Eye protection in the form of suitable goggles shall be provided where needed for brazing operations not covered in (1)(a), (b) and (c) of this section.

(2) Specifications for protectors.

(a) Helmets and hand shields shall be made of a material which is an insulator for heat and electricity. Helmets, shields and goggles shall be not readily flammable and shall be capable of understanding sterilization.

(b) Helmets and hand shields shall be arranged to protect the face, neck and ears from direct radiant energy from the arc.

(c) Helmets shall be provided with filter plates and cover plates designed for easy removal.

(d) All parts shall be constructed of a material which will not readily corrode or discolor the skin.

(e) Goggles shall be ventilated to prevent fogging of the lenses as much as practicable.

(f) Cover lenses or plates should be provided to protect each helmet, hand shield or goggle filter lens or plate.

(g) All glass for lenses shall be tempered, substantially free from striae, air bubbles, waves and other flaws. Except when a lens is ground to provide proper optical correction for defective vision, the front and rear surfaces of lenses and windows shall be smooth and parallel.

(h) Lenses shall bear some permanent distinctive marking by which the source and shade may be readily identified.

(i) The following is a guide for the selection of the proper shade numbers. These recommendations may be varied to suit the individual's needs.

Filter Lenses for Protection against Radiant Energy

Welding operation	Electrode Size 1/32 (inches)	Minimum protective arc current	Shade number
Shielded metal arc welding	Less than 3	Less than 60	10
	3-5	60-160	10
	5-8	160-250	12
	More than 8	250-550	14
Gas shielded arc welding (non-ferrous)	2, 3, 4, 5		11
Gas shielded arc welding (ferrous)	2, 3, 4, 5		12
Gas metal arc welding		Less than 60	7
		60-160	10
		160-250	10
		250-500	10
Flux cored arc welding		Less than 60	7
		60-160	10
		160-250	10
		250-500	10
Gas tungsten arc welding		Less than 50	8
		50-150	8
		150-500	10
Air carbon—light Light		Less than 500	10

Welding operation	Electrode Size 1/32 (inches)	Minimum protective arc current	Shade number
Arc cutting—heavy		500-1000	11
Carbon arc welding			14
Plasma arc welding		Less than 20	6
		20-100	8
		100-400	10
		400-800	11
Plasma arc cutting		Less than 300 (light)	8
		300-400 (medium)	9
		400-800 (heavy)	10
Atomic hydrogen welding			10-14
Torch soldering			2
Torch brazing			3 or 4
Gas welding			
Light	Under 1/8	Under 3.2	3 or 4

Note: In gas welding or oxygen cutting where the torch produces a high yellow light, it is desirable to use a filter or lens that absorbs the yellow or sodium line in the visible light of the operation.

(j) All filter lenses and plates shall meet the test for transmission of radiant energy prescribed in ANSI Z 87.1-1968—American National Standard Practice for Occupational and Educational Eye and Face Protection.

(3) Protection from arc welding rays. Where the work permits, the welder should be enclosed in an individual booth painted with a finish of low-reflectivity such as zinc oxide (an important factor for absorbing ultraviolet radiations) and lamp black; or shall be enclosed with noncombustible screens similarly painted. Booths and screens shall permit circulation of air at floor level. Workers or other persons adjacent to the welding areas shall be protected from the rays by noncombustible or flameproof screens or shields or shall be required to wear appropriate goggles.

[Statutory Authority: RCW 49.17.010, [49.17].040, and [49.17].050. 01-11-038, § 296-24-70003, filed 5/9/01, effective 9/1/01; Order 73-5, § 296-24-70003, filed 5/9/73 and Order 73-4, § 296-24-70003, filed 5/7/73.]

WAC 296-24-70005 Protective clothing. (1) General requirements. Employees exposed to the hazards created by welding, cutting, or brazing operations shall be protected by personal protective equipment in accordance with the requirements of chapter 296-24 WAC, Part I, and WAC 296-800-160. Appropriate protective clothing required for any welding operation will vary with the size, nature and location of the work to be performed.

(2) Specified protective clothing. Protective means which may be employed are as follows:

(a) Except when engaged in light work, all welders should wear flameproof gauntlet gloves.

(b) Flameproof aprons made of leather, asbestos, or other suitable material may also be desirable as protection against radiated heat and sparks.

(c) Woolen clothing preferable to cotton because it is not so readily ignited and helps protect the welder from changes in temperature. Cotton clothing, if used, should be chemically treated to reduce its combustibility. All outer clothing such as jumpers or overalls should be reasonably free from oil or grease.

(d) Sparks may lodge in rolled-up sleeves or pockets of clothing, or cuffs of overalls or trousers. It is therefore recommended that sleeves and collars be kept buttoned and pockets be eliminated from the front of overalls and aprons. Trousers or overalls should not be turned up on the outside.

Note: For heavy work, fire-resistant leggings, high boots, or other equivalent means should be used.

(e) In production work a sheet metal screen in front of the worker's legs can provide further protection against sparks and molten metal in cutting operations.

(f) Capes or shoulder covers made of leather or other suitable materials should be worn during overhead welding or cutting operations. Leather skull caps may be worn under helmets to prevent head burns.

(g) For overhead welding and cutting, or welding and cutting in extremely confined spaces, ear protection is sometimes desirable.

(h) Where there is exposure to sharp or heavy falling objects, or a hazard of bumping in confined spaces, hard hats or head protectors shall be used.

[Statutory Authority: RCW 49.17.010, [49.17].040, and [49.17].050. 01-11-038, § 296-24-70005, filed 5/9/01, effective 9/1/01. Statutory Authority: Chapter 49.17 RCW. 94-20-057 (Order 94-16), § 296-24-70005, filed 9/30/94, effective 11/20/94; Order 73-5, § 296-24-70005, filed 5/9/73 and Order 73-4, § 296-24-70005, filed 5/7/73.]

WAC 296-24-70007 Work in confined spaces. (1) General. As used herein confined space is intended to mean a relatively small or restricted space such as a tank, boiler, pressure vessel, or small compartment of a ship.

(2) Ventilation. Ventilation is a prerequisite to work in confined spaces. For ventilation requirements see WAC 296-24-71501 through 296-24-71525.

(3) Securing cylinders and machinery. When welding or cutting is being performed in any confined spaces the gas cylinders and welding machines shall be left on the outside. Before operations are started, heavy portable equipment mounted on wheels shall be securely blocked to prevent accidental movement.

(4) Lifelines. Where a welder must enter a confined space through a manhole or other small opening, means shall be provided for quickly removing the welder in case of emergency. When safety belts and lifelines are used for this purpose they shall be so attached in a manner so that the welder's body cannot be jammed in a small exit opening. An attendant with a preplanned rescue procedure shall be stationed outside to observe the welder at all times and be capable of putting rescue operations into effect.

(5) Electrode removal. When arc welding is to be suspended for any substantial period of time, such as during lunch or overnight, all electrodes shall be removed from the holders and the holders carefully located so that accidental contact cannot occur and the machine disconnected from the power source.

(6) Gas cylinder shutoff. In order to eliminate the possibility of gas escaping through leaks or improperly closed valves, when gas welding or cutting, the torch valves shall be closed and the fuel-gas and oxygen supply to the torch positively shut off at some point outside the confined area whenever the torch is not to be used for a substantial period of time, such as during lunch hour or overnight. Where practicable the torch and hose shall also be removed from the confined space.

(7) Warning sign. After welding operations are completed, the welder shall mark the hot metal or provide some other means of warning other workers.

[Statutory Authority: Chapter 49.17 RCW. 94-15-096 (Order 94-07), § 296-24-70007, filed 7/20/94, effective 9/20/94; Order 73-5, § 296-24-70007, filed 5/9/73 and Order 73-4, § 296-24-70007, filed 5/7/73.]

WAC 296-24-715 Health protection and ventilation.

[Order 73-5, § 296-24-715, filed 5/9/73 and Order 73-4, § 296-24-715, filed 5/7/73.]

WAC 296-24-71501 General. (1) Contamination. The requirements in this section have been established on the basis of the following three factors in arc and gas welding which govern the amount of contamination to which welders may be exposed:

(a) Dimensions of space in which welding is to be done (with special regard to height of ceiling).

(b) Number of welders.

(c) Possible evolution of hazardous fumes, gases, or dust according to the metals involved.

(2) Ventilation. It is recognized that in individual instances other factors may be involved in which case ventilation or respiratory protective devices should be provided as needed to meet the equivalent requirements of this section. Such factors would include:

(a) Atmospheric conditions.

(b) Heat generated.

(c) Presence of volatile solvents.

(3) Screens. When welding must be performed in a space entirely screened on all sides, the screens shall be so arranged that no serious restriction of ventilation exists. It is desirable to have the screens so mounted that they are about 2 feet above the floor unless the work is performed at so low a level that the screen must be extended nearer to the floor to protect nearby workers from the glare of welding.

(4) Maximum allowable concentration. Local exhaust or general ventilating systems shall be provided and arranged to keep the amount of toxic fumes, gases, or dusts below the maximum allowable concentration as specified in chapter 296-62 WAC.

Note: A number of potentially hazardous materials are employed in fluxes, coatings, coverings, and filler metals used in welding and cutting or are released to the atmosphere during welding and cutting. These include but are not limited to the materials itemized in WAC 296-24-71509 through 296-24-71523.

(5) Precautionary labels. The employer shall ascertain the potentially hazardous materials, associated with welding, cutting, etc., and inform the employee of same wither [whether] through signs, labels or other appropriate means.

(a) All filler metals and fusible granular materials shall carry the following notice, as a minimum, on tags, boxes, or other containers:

CAUTION

Welding may produce fumes and gases hazardous to health. Avoid breathing these fumes and gases. Use adequate ventilation. See ANSI Z 49.1-1967 Safety in Welding and Cutting published by the American Welding Society.

(b) Brazing (welding) filler metals containing cadmium in significant amounts shall carry the following notice on tags, boxes, or other containers:

WARNING
CONTAINS CADMIUM—POISONOUS FUMES MAY BE FORMED ON HEATING

Do not breathe fumes. Use only with adequate ventilation such as fume collectors, exhaust ventilators, or air-supplied respirators. See ANSI Z 49.1-1967.

If chest pain, cough, or fever develops after use call physician immediately.

Keep children away when using.

(c) Brazing and gas welding fluxes containing fluorine compounds shall have a cautionary wording to indicate that they contain fluorine compounds. One such cautionary wording recommended by the American Welding Society for brazing and gas welding fluxes reads as follows:

CAUTION
CONTAINS FLUORIDES

This flux when heated gives off fumes that may irritate eyes, nose and throat.

(i) Avoid fumes-use only in well-ventilated spaces.

(ii) Avoid contact of flux with eyes or skin.

(iii) Do not take internally.

[Order 73-5, § 296-24-71501, filed 5/9/73 and Order 73-4, § 296-24-71501, filed 5/7/73.]

WAC 296-24-71503 Ventilation for general welding and cutting. (1) General. Mechanical ventilation shall be provided when welding or cutting is done on metals not covered in WAC 296-24-71509 through 296-24-71523. (For specific material, see the ventilation requirements of WAC 296-24-71509 through 296-24-71523.)

(a) In a space of less than 10,000 cubic feet per welder.

(b) In a room having a ceiling height of less than 16 feet.

(c) In confined spaces or where the welding space contains partitions, balconies, or other structural barriers to the extent that they significantly obstruct cross ventilation.

(2) Minimum rate. Such ventilation shall be at the minimum rate of 2,000 cubic feet per minute per welder, except where local exhaust hoods and booths as per WAC 296-24-71505, or airline respirators approved by the Mine Safety and Health Administration (MSHA) and the National Institute for Occupational Safety and Health (NIOSH) for such purposes

are provided. Natural ventilation is considered sufficient for welding or cutting operations where the restrictions in WAC 296-24-71503(1) are not present.

[Statutory Authority: Chapter 49.17 RCW. 94-15-096 (Order 94-07), § 296-24-71503, filed 7/20/94, effective 9/20/94; Order 73-5, § 296-24-71503, filed 5/9/73 and Order 73-4, § 296-24-71503, filed 5/7/73.]

WAC 296-24-71505 Local exhaust hoods and booths. Mechanical local exhaust ventilation may be by means of either of the following:

(1) Hoods. Freely movable hoods intended to be placed by the welder as near as practicable to the work being welded and provided with a rate of airflow sufficient to maintain a velocity in the direction of the hood of 100 linear feet per minute in the zone of welding when the hood is at its most remote distance from the point of welding. The rates of ventilation required to accomplish this control velocity using a 3-inch wide flanged suction opening are shown in the following table:

Welding zone	Minimum air flow[1] cubic feet/minutes	Duct diameter inches[2]
4 to 6 inches from arc or torch—	150	3
6 to 8 inches from arc or torch—	275	3 1/2
8 to 10 inches from arc or torch—	425	4 1/2
10 to 12 inches from arc or torch—	600	5 1/2

[1]When brazing with cadmium bearing materials or when cutting on such materials increased rates of ventilation may be required.

[2]Nearest half-inch duct diameter based on 4,000 feet per minute velocity in pipe.

(2) Fixed enclosure. A fixed enclosure with a top and not less than two sides which surround the welding or cutting operations and with a rate of airflow sufficient to maintain a velocity away from the welder of not less than 100 linear feet per minute.

[Order 73-5, § 296-24-71505, filed 5/9/73 and Order 73-4, § 296-24-71505, filed 5/7/73.]

WAC 296-24-71507 Ventilation in confined spaces. (1) Air replacement. All welding and cutting operations carried on in confined spaces shall be adequately ventilated to prevent the accumulation of toxic materials or possible oxygen deficiency. This applies not only to the welder but also to helpers and other personnel in the immediate vicinity. All air replacing that withdrawn shall be clean and respirable.

(2) Airline respirators. In such circumstances where it is impossible to provide such ventilation, airline respirators or hose masks approved for this purpose by the National Institute for Occupational Safety and Health (NIOSH) under 42 CFR part 84 must be used.

(3) Self-contained units. In areas immediately hazardous to life, a full-facepiece, pressure-demand, self-contained breathing apparatus or a combination full-facepiece, pressure-demand supplied-air respirator with an auxiliary, self-contained air supply certified by NIOSH under 42 CFR part 84 must be used.

(4) Outside helper. Where welding operations are carried on in confined spaces and where welders and helpers are provided with hose masks, hose masks with blowers or self-contained breathing equipment approved by the Mine Safety and Health Administration (MSHA) and the National Institute for Occupational Safety and Health (NIOSH), a worker shall be stationed on the outside of such confined spaces to insure the safety of those working within.

(5) Oxygen for ventilation. Oxygen shall not be used for ventilation.

[Statutory Authority: RCW 49.17.010, [49.17].040 and [49.17].050. 99-10-071, § 296-24-71507, filed 5/4/99, effective 9/1/99. Statutory Authority: Chapter 49.17 RCW. 94-15-096 (Order 94-07), § 296-24-71507, filed 7/20/94, effective 9/20/94; Order 73-5, § 296-24-71507, filed 5/9/73 and Order 73-4, § 296-24-71507, filed 5/7/73.]

WAC 296-24-71509 Fluorine compounds. (1) General. In confined spaces, welding or cutting involving fluxes, coverings, or other materials which contain fluorine compounds shall be done in accordance with WAC 296-24-71507 (1) through (5). A fluorine compound is one that contains fluorine, as an element in chemical combination, not as a free gas.

Note: Maximum allowable concentration. The need for local exhaust ventilation or airline respirators for welding or cutting in other than confined spaces will depend upon the individual circumstances. However, experience has shown such protection to be desirable for fixed-location production welding and for all production welding on stainless steels. Where air samples taken at the welding location indicate that the fluorides liberated are below the maximum allowable concentration, such protection is not necessary.

[Order 73-5, § 296-24-71509, filed 5/9/73 and Order 73-4, § 296-24-71509, filed 5/7/73.]

WAC 296-24-71511 Zinc. (1) Confined spaces. In confined spaces welding or cutting involving zinc-bearing base or filler metals or metals coated with zinc-bearing materials shall be done in accordance with WAC 296-24-71507 (1) through (5).

(2) Indoors. Indoors, welding or cutting involving zinc-bearing base or filler metals coated with zinc-bearing materials shall be done in accordance with WAC 296-24-71505 (1) and (2).

[Order 73-5, § 296-24-71511, filed 5/9/73 and Order 73-4, § 296-24-71511, filed 5/7/73.]

WAC 296-24-71513 Lead. (1) Confined spaces. In confined spaces, welding involving lead-base metals (erroneously called lead-burning) shall be done in accordance with WAC 296-24-71507 (1) through (5).

(2) Indoors. Indoors, welding involving lead-base metals shall be done in accordance with WAC 296-24-71505 (1) and (2).

(3) Local ventilation. In confined spaces or indoors, welding or cutting operations involving metals containing lead, other than as an impurity, or involving metals coated with lead-bearing materials, including paint must be done using local exhaust ventilation or airline respirators. Such operations, when done outdoors, must be done using respirators, certified for this purpose by NIOSH under 42 CFR part 84. In all cases, workers in the immediate vicinity of the cutting operation must be protected as necessary by local exhaust ventilation or airline respirators.

Note: See chapter 296-62 WAC for additional requirements on lead.

[Statutory Authority: RCW 49.17.010, [49.17].040 and [49.17].050. 99-10-071, § 296-24-71513, filed 5/4/99, effective 9/1/99. Statutory Authority: Chapter 49.17 RCW. 94-15-096 (Order 94-07), § 296-24-71513, filed 7/20/94, effective 9/20/94; Order 73-5, § 296-24-71513, filed 5/9/73 and Order 73-4, § 296-24-71513, filed 5/7/73.]

WAC 296-24-71515 Beryllium. Welding or cutting indoors, outdoors, or in confined spaces involving beryllium-containing base or filler metals shall be done using local exhaust ventilation and airline respirators unless atmospheric tests under the most adverse conditions have established that the workers' exposure is within the acceptable concentrations defined by chapter 296-841 WAC. In all cases, workers in the immediate vicinity of the welding or cutting operations shall be protected as necessary by local exhaust ventilation or airline respirators.

[Statutory Authority: RCW 49.17.010, 49.17.040, 49.17.050, 49.17.060. 05-03-093, § 296-24-71515, filed 1/18/05, effective 3/1/05; Order 73-5, § 296-24-71515, filed 5/9/73 and Order 73-4, § 296-24-71515, filed 5/7/73.]

WAC 296-24-71517 Cadmium. (1) General. In confined spaces or indoors, welding or cutting operations involving cadmium-bearing or cadmium-coated base metals must be done using local exhaust ventilation or airline respirators unless atmospheric tests under the most adverse conditions show that employee exposure is within the acceptable concentrations specified by chapter 296-62 WAC. Such operations, when done outdoors, must be done using respirators, such as fume respirators, certified for this purpose by NIOSH under 42 CFR part 84.

(2) Confined space. Welding (brazing) involving cadmium-bearing filler metals shall be done using ventilation as prescribed in WAC 296-24-71505 or 296-24-71507 if the work is to be done in a confined space.

Note: See chapter 296-62 WAC for additional requirements on cadmium.

[Statutory Authority: RCW 49.17.010, [49.17].040 and [49.17].050. 99-10-071, § 296-24-71517, filed 5/4/99, effective 9/1/99. Statutory Authority: Chapter 49.17 RCW. 94-15-096 (Order 94-07), § 296-24-71517, filed 7/20/94, effective 9/20/94; Order 73-5, § 296-24-71517, filed 5/9/73 and Order 73-4, § 296-24-71517, filed 5/7/73.]

WAC 296-24-71519 Mercury. In confined spaces or indoors, welding or cutting operations involving metals coated with mercury-bearing materials, including paint, must be done using local exhaust ventilation or airline respirators unless atmospheric tests under the most adverse conditions show that employee exposure is within the acceptable concentrations specified by chapter 296-841 WAC. Such operations, when done outdoors, must be done using respirators certified for this purpose by NIOSH under 24 CFR part 84.

[Statutory Authority: RCW 49.17.010, 49.17.040, 49.17.050, 49.17.060. 05-03-093, § 296-24-71519, filed 1/18/05, effective 3/1/05. Statutory Authority: RCW 49.17.010, [49.17].040 and [49.17].050. 99-10-071, § 296-24-71519, filed 5/4/99, effective 9/1/99. Statutory Authority: Chapter 49.17 RCW. 94-15-096 (Order 94-07), § 296-24-71519, filed 7/20/94, effective 9/20/94; Order 73-5, § 296-24-71519, filed 5/9/73 and Order 73-4, § 296-24-71519, filed 5/7/73.]

WAC 296-24-71521 Cleaning compounds. (1) Manufacturer's instructions. In the use of cleaning materials, because of their possible toxicity of flammability, appropriate precautions such as manufacturer's instructions shall be followed.

(2) Degreasing. Degreasing or other cleaning operations involving chlorinated hydrocarbons shall be so located that no vapors from these operations will reach or be drawn into the atmosphere surrounding any welding operation. In addition, trichloroethylene and perchlorethylene should be kept out of atmospheres penetrated by the ultraviolet radiation of gas-shielded welding operations.

[Order 73-5, § 296-24-71521, filed 5/9/73 and Order 73-4, § 296-24-71521, filed 5/7/73.]

WAC 296-24-71523 Cutting of stainless steels. Oxygen cutting, using either a chemical flux or iron powder or gas-shielded arc cutting of stainless steel, shall be done using mechanical ventilation adequate to remove the fumes generated.

[Order 73-5, § 296-24-71523, filed 5/9/73 and Order 73-4, § 296-24-71523, filed 5/7/73.]

WAC 296-24-71525 First-aid equipment. First-aid equipment shall be available at all times. On every shift of welding operations there should be present employees trained to render first aid. All injuries shall be reported as soon as possible for medical attention. First aid shall be rendered until medical attention can be provided.

[Order 73-5, § 296-24-71525, filed 5/9/73 and Order 73-4, § 296-24-71525, filed 5/7/73.]

WAC 296-24-720 Industrial applications.

[Order 73-5, § 296-24-720, filed 5/9/73 and Order 73-4, § 296-24-720, filed 5/7/73.]

WAC 296-24-72001 Transmission pipeline. (1) General. The requirements of WAC 296-24-68501 through 296-24-68507, 296-24-70001 through 296-24-70007, and 296-24-71501 through 296-24-71525, shall be observed.

(2) Field shop operations. Where field shop operations are involved for fabrication of fittings, river crossings, road crossings, and pumping and compressor stations the requirements of WAC 296-24-68001, 296-24-68501 through 296-24-68507, 296-24-69501 through 296-24-69507, 296-24-70001 through 296-24-70007 and 296-24-71501 through 296-24-71525 shall be observed.

(3) Electric shock. When arc welding is performed in wet conditions, or under conditions of high humidity, special protection against electric shock shall be supplied.

(4) Pressure testing. In pressure testing of pipelines, the workers and the public shall be protected against injury by the blowing out of closures or other pressures restraining devices. Also, protection shall be provided against expulsion of loose dirt that may have become trapped in the pipe.

(5) Construction standards. The welded construction of transmission pipelines shall be conducted in accordance with the Standard for Welding Pipe Lines and Related Facilities, API Std. 1104-1968.

(6) Flammable substance lines. The connection, by welding, of branches to pipelines carrying flammable substances shall be performed in accordance with Welding or

Hot Tapping on Equipment Containing Flammables, API Std. PSD No. 2201-1963.

(7) X-ray inspection. The use of X rays and radioactive isotopes for the inspection of welded pipeline joints shall be carried out in conformance with the American National Standard Safety Standard for Nonmedical X-ray and Sealed Gamma-Ray Sources, ANSI Z 54.1-1963.

[Order 73-5, § 296-24-72001, filed 5/9/73 and Order 73-4, § 296-24-72001, filed 5/7/73.]

WAC 296-24-72003 Mechanical piping systems. (1) General. The requirements of WAC 296-24-68001, 296-24-68501 through 296-24-68507, 296-24-69501 through 296-24-69507, 296-24-70001 through 296-24-70007 and 296-24-71501 through 296-24-71525 shall be observed.

(2) X-ray inspection. The use of X rays and radioactive isotopes for the inspection of welded piping joints shall be in conformance with the American National Standard Safety Standard for Nonmedical X ray and Sealed Gamma-Ray Sources, ANSI Z 54.1-1963.

[Order 73-5, § 296-24-72003, filed 5/9/73 and Order 73-4, § 296-24-72003, filed 5/7/73.]

WAC 296-24-722 Welding, cutting, and heating in way of preservative coatings. (1) Before welding, cutting, or heating is commenced on any surface covered by a preservative coating whose flammability is not known, a test shall be made by a competent person to determine its flammability. Preservative coatings shall be considered to be highly flammable when scrapings burn with extreme rapidity.

(2) Precautions shall be taken to prevent ignition of highly flammable hardened preservative coatings. When coatings are determined to be highly flammable, they shall be stripped from the area to be heated to prevent ignition.

(3) Protection against toxic preservative coatings:

(a) In enclosed spaces, all surfaces covered with toxic preservatives shall be stripped of all toxic coatings for a distance of at least 4 inches from the area of heat application, or the employees shall be protected by air line respirators, meeting the requirements specified in these rules for this type of work.

(b) In the open air, employees shall be protected by a respirator, suitable for the type of work being done.

(4) The preservative coatings shall be removed a sufficient distance from the area to be heated to ensure that the temperature of the unstripped metal will not be appreciably raised. Artificial cooling of the metal surrounding the heating area may be used to limit the size of the area required to be cleaned.

[Order 73-5, § 296-24-722, filed 5/9/73 and Order 73-4, § 296-24-722, filed 5/7/73.]

PART J-1
WORKING SURFACES, GUARDING FLOORS AND WALL OPENINGS

Note: Requirements relating to portable ladders and fixed ladders have been moved to chapter 296-876 WAC, Ladders, portable and fixed.

WAC 296-24-735 Walking-working surfaces.

[Order 73-5, § 296-24-735, filed 5/9/73 and Order 73-4, § 296-24-735, filed 5/7/73.]

WAC 296-24-73501 General requirements. This section applies to all permanent places of employment, except where domestic, mining, or agricultural work only is performed. Construction work is not to be deemed as a permanent place of employment. Measures for the control of toxic materials are considered to be outside the scope of this section.

[Statutory Authority: RCW 49.17.010, [49.17].050 and [49.17].060. 95-22-015, § 296-24-73501, filed 10/20/95, effective 1/16/96. Statutory Authority: Chapter 49.17 RCW. 94-06-068 (Order 93-17), § 296-24-73501, filed 3/2/94, effective 3/1/95; Order 73-5, § 296-24-73501, filed 5/9/73 and Order 73-4, § 296-24-73501, filed 5/7/73.]

WAC 296-24-73505 Aisles and passageways. (1) Where mechanical handling equipment is used, sufficient safe clearances shall be allowed for aisles, at loading docks, through doorways and wherever turns or passage must be made. Aisles and passageways shall be kept clear and in good repairs, with no obstruction across or in aisles that could create a hazard.

(2) Permanent aisles and passageways shall be appropriately marked. "Appropriate" does not limit the marking to printed lines on the floor only. Other appropriate methods may be marked pillars, powder stripping, flags, traffic cones, or barrels, provided they are maintained in good repair and the recognition of such markings are included in the training programs for vehicle operators and employees.

(3) All trestles in connection with industrial plants on which cars run, which are also used as walkways for workers, shall be equipped with a walkway on the outer edge, so located as to give safe minimum clearance of three feet to cars. Such walkways shall be equipped with standard rails. Where a trestle crosses a driveway or passageway the trestle over such points shall be solidly boarded over.

[Statutory Authority: Chapter 49.17 RCW. 94-15-096 (Order 94-07), § 296-24-73505, filed 7/20/94, effective 9/20/94; 89-11-035 (Order 89-03), § 296-24-73505, filed 5/15/89, effective 6/30/89; Order 73-5, § 296-24-73505, filed 5/9/73 and Order 73-4, § 296-24-73505, filed 5/7/73.]

WAC 296-24-73507 Covers and guardrails. (1) All open vats and tanks into which workers may fall shall be guarded with railings or screen guards.

(2) All open vats and tanks where workers are employed shall have a platform or walkway 36 to 42 inches below the top of vat or tank or where walkway is flush with top of vat or tank, a standard safeguard of 36 to 42 inches high shall be constructed.

(3) Every tank over 5 feet deep, excepting where agitators are used or where products may be damaged by ladders, shall have a ladder fixed on the inside so placed as to connect with means of access from the outside. Rungs shall have a clearance of at least 6 inches measured between the rung and the side of the tank.

[Statutory Authority: RCW 49.17.040, 49.17.150, and 49.17.240. 79-08-115 (Order 79-9), § 296-24-73507, filed 7/31/79; Order 74-27, § 296-24-73507, filed 5/7/74; Order 73-5, § 296-24-73507, filed 5/9/73 and Order 73-4, § 296-24-73507, filed 5/7/73.]

WAC 296-24-73511 Steam pipes. (1) All steam pipes or pipes heated by any other means to a sufficient temperature to burn a person (other than coil pipes, radiators, for heating rooms or buildings, or pipes on portable steam engines and boilers) and which are within seven feet of a floor or platform, if exposed to contact, shall be guarded with a standard safeguard.

(2) Protection from hot pipes. All exposed hot pipes within seven feet of the floor or working platform, or within 15 inches measured horizontally from stairways, ramps or fixed ladders, shall be covered with an insulating material or be guarded in such a manner as to prevent contact.

[Order 74-27, § 296-24-73511, filed 5/7/74.]

WAC 296-24-750 Guarding floor and wall openings and holes.

[Order 73-5, § 296-24-750, filed 5/9/73 and Order 73-4, § 296-24-750, filed 5/7/73.]

WAC 296-24-75001 Terms. The following terms shall have the meaning ascribed in this section, when referred to in WAC 296-24-75003 through 296-24-75011, unless the context requires otherwise.

(1) Floor hole. An opening measuring less than 12 inches but more than 1 inch in its least dimension, in any floor, platform, pavement, or yard, through which materials but not persons may fall; such as a belt hole, pipe opening, or slot opening.

(2) Floor opening. An opening measuring 12 inches or more in its least dimension, in any floor, platform, pavement, or yard, through which persons may fall; such as a hatchway, stair or ladder opening, pit, or large manhole. Floor openings occupied by elevators, dumb waiters, conveyors, machinery, or containers are excluded from this part.

(3) Handrail. A single bar or pipe supported on brackets from a wall or partition, as on a stairway or ramp, to furnish persons with a handhold in case of tripping.

(4) Platform. A working space for persons, elevated above the surrounding floor or ground; such as a balcony or platform for the operation of machinery and equipment.

(5) Runway. A passageway for persons, elevated above the surrounding floor or ground level, such as a footwalk along shafting or a walkway between buildings.

(6) Standard railing. A vertical barrier erected along exposed edges of a floor opening, wall opening, ramp, platform, or runway to prevent falls of person.

(7) Standard strength and construction. Any construction of railings, covers, or other guards that meets the requirements of WAC 296-24-750 through 296-24-75011.

(8) Stair railing. A vertical barrier erected along exposed sides of a stairway to prevent falls of persons.

(9) Toeboard. A vertical barrier at floor level erected along exposed edges of a floor opening, wall opening, platform, runway, or ramp to prevent falls of materials.

(10) Wall hole. An opening less than 30 inches but more than 1 inch high, of unrestricted width, in any wall or partition; such as a ventilation hole or drainage scupper.

(11) Wall opening. An opening at least 30 inches high and 18 inches wide, in any wall or partition, through which persons may fall; such as a yard-arm doorway or chute opening.

[Statutory Authority: Chapter 49.17 RCW. 94-15-096 (Order 94-07), § 296-24-75001, filed 7/20/94, effective 9/20/94; Order 73-5, § 296-24-75001, filed 5/9/73 and Order 73-4, § 296-24-75001, filed 5/7/73.]

WAC 296-24-75003 Protection for floor openings. (1) Every ladderway floor opening or platform shall be guarded by a standard railing with standard toeboard on all exposed sides (except at entrance to opening), with the passage through the railing either provided with a swinging gate or so offset that a person cannot walk directly into the opening.

(2) Every hatchway and chute floor opening shall be guarded by one of the following:

(a) Hinged floor opening cover of standard strength and construction equipped with standard railings or permanently attached thereto so as to leave only one exposed side. When the opening is not in use, the cover shall be closed or the exposed side shall be guarded at both top and intermediate positions by removable standard railings.

(b) A removable railing with toeboard on not more than two sides of the opening and fixed standard railings with toeboards on all other exposed sides. The removable railings shall be kept in place when the opening is not in use and should preferably be hinged or otherwise mounted so as to be conveniently replaceable.

Where operating conditions necessitate the feeding of material into any hatchway or chute opening, protection shall be provided to prevent a person from falling through the opening.

(c) The area under floor openings shall, where practical, be fenced off. When this is not practical, the areas shall be plainly marked with yellow lines and telltales shall be installed to hang within five and one-half feet of ground or floor level.

(d) Where floor openings are used to drop materials from one level to another, audible warning systems shall be installed and used to indicate to employees on the lower level that material is to be dropped.

(3) Every skylight opening and hole shall be guarded by a standard skylight screen or a fixed standard railing on all exposed sides.

(4) Every pit and trapdoor floor opening, infrequently used, shall be guarded by a floor opening cover of standard strength and construction which should be hinged in place. While the cover is not in place, the pit or trap opening shall be constantly attended by someone or shall be protected on all exposed sides by removable standard railings.

(5) Every manhole floor opening shall be guarded by a standard manhole cover which need not be hinged in place. While the cover is not in place, the manhole opening shall be constantly attended by someone or shall be protected by removable standard railings.

[Statutory Authority: RCW 49.17.010, [49.17].040, and [49.17].050. 01-17-033, § 296-24-75003, filed 8/8/01, effective 9/1/01; Order 74-27, § 296-24-75003, filed 5/7/74; Order 73-5, § 296-24-75003, filed 5/9/73 and Order 73-4, § 296-24-75003, filed 5/7/73.]

WAC 296-24-75005 Protection for wall openings and holes. (1) Every wall opening from which there is a drop of more than 4 feet shall be guarded by one of the following:

(a) Rail, roller, picket fence, half door, or equivalent barrier.

The guard may be removable but should preferably be hinged or otherwise mounted so as to be conveniently replaceable. Where there is exposure below to falling materials, a removable toeboard or the equivalent shall also be provided. When the opening is not in use for handling materials, the guard shall be kept in position regardless of a door on the opening. In addition, a grab handle shall be provided on each side of the opening with its center approximately 4 feet above floor level and of standard strength and mounting.

(b) Extension platform onto which materials can be hoisted for handling, and which shall have side rails or equivalent guards of standard specifications.

(2) Every chute wall opening from which there is a drop of more than 4 feet shall be guarded by one or more of the barriers specified in WAC 296-24-75005 (1)(a) and (b), or as required by the conditions.

(3) Every window wall opening at a stairway landing, floor, platform, or balcony, from which there is a drop of more than 4 feet, and where the bottom of the opening is less than 3 feet above the platform or landing, shall be guarded by standard slats, standard grill work (as specified in WAC 296-24-75011(11)), or standard railing.

Where the window opening is below the landing, or platform, a standard toeboard shall be provided.

(4) Every temporary wall opening shall have adequate guards but these need not be of standard construction.

(5) Where there is a hazard of materials falling through a wall hole, and the lower edge of the near side of the hole is less than 4 inches above the floor, and the far side of the hole more than 5 feet above the next lower level, the hole shall be protected by a standard toeboard, or an enclosing screen either of sold construction, or as specified in WAC 296-24-75011(11).

[Order 73-5, § 296-24-75005, filed 5/9/73 and Order 73-4, § 296-24-75005, filed 5/7/73.]

WAC 296-24-75007 Protection of open-sided runways. (1) Railings must be provided with a toeboard wherever, beneath the open sides:

(a) Person can pass;

(b) There is moving machinery; or

(c) There is equipment with which falling materials could create a hazard.

(2) Every runway shall be guarded by a standard railing (or the equivalent as specified in WAC 296-24-75011(3) on all open sides 4 feet or more above floor or ground level. Wherever tools, machine parts, or materials are likely to be used on the runway, a toeboard shall also be provided on each exposed side.

Runways used exclusively for special purposes (such as oiling, shafting, or filling tank cars) may have the railing on one side omitted where operating conditions necessitate such omission, providing the falling hazard is minimized by using a runway of not less than 18 inches wide. Where persons entering upon runways become thereby exposed to machinery, electrical equipment, or other danger not a falling hazard, additional guarding than is here specified may be essential for protection.

(3) Regardless of height, runways above or adjacent to dangerous equipment, pickling or galvanizing tanks, degreasing units, and similar hazards shall be guarded with a standard railing and toeboard.

[Statutory Authority: RCW 49.17.010, [49.17].040, and [49.17].050. 01-17-033, § 296-24-75007, filed 8/8/01, effective 9/1/01; Order 76-6, § 296-24-75007, filed 3/1/76; Order 73-5, § 296-24-75007, filed 5/9/73 and Order 73-4, § 296-24-75007, filed 5/7/73.]

WAC 296-24-75011 Railing, toeboards, and cover specifications. (1) A standard railing shall consist of top rail, intermediate rail, and posts, and shall have a vertical height of forty-two inches, plus or minus three inches, from upper surface of top rail to floor, platform, runway, or ramp level and:

(a) The top rail shall be smooth-surfaced throughout the length of the railing.

(b) The intermediate rail shall be approximately halfway between the top rail and the floor, platform, runway, or ramp.

(c) The ends of the rails shall not overhang the terminal posts except where such overhang does not constitute a projection hazard.

(d) Guardrails with heights greater than 42 inches are permissible provided the extra height does not create a dangerous situation for employees and that additional mid-rails were installed so that openings beneath the top rail would not permit the passage of a 19-inch or larger spherical object.

(2) A stair railing shall be of construction similar to a standard railing but the vertical height shall be not more than thirty-four inches nor less than thirty inches from upper surface of top rail to surface of tread in line with face of riser at forward edge of tread.

(3) Minimum requirements for standard railings under various types of construction are specified in this subsection. Dimensions specified are based on the U.S. Department of Agriculture Wood Handbook, No. 72, 1955 (No. 1 (S4S) Southern Yellow Pine (Modulus of Rupture 7,400 p.s.i.)) for wood; ANSI G 41.5-1970, American National Standard Specifications for Structural Steel, for structural steel; and ANSI B 125.1-1970, American National Standard Specifications for Welded and Steamless Steel Pipe, for pipe.

(a) For wood railings, the posts shall be of at least two-inch by four-inch nominal stock spaced not to exceed six feet; the top and intermediate rails shall be of at least two-inch by four-inch nominal stock. If top rail is made of two right-angle pieces of one-inch by four-inch stock, posts may be spaced on eight-foot centers, with two-inch by four-inch intermediate rail.

(b) For pipe railings, posts and top and intermediate railings shall be at least one and one-half inches nominal diameter (outside diameter) with posts spaced not more than eight feet on centers.

(c) For structural steel railings, posts and top and intermediate rails shall be of two-inch by two-inch by three-eighths-inch angles or other metal shapes of equivalent bending strength with posts spaced not more than eight feet on centers.

(d) The anchoring of posts and framing of members for railings of all types shall be of such construction that the completed structure shall be capable of withstanding a load of at least two hundred pounds applied in any direction at any point on the top rail.

(e) Other types, sizes, and arrangements of railing construction are acceptable provided they meet the following conditions:

(i) A smooth-surfaced top rail at a height above floor, platform, runway, or ramp level of from thirty-six to forty-two inches nominal;

(ii) A strength to withstand at least the minimum requirement of two hundred pounds top rail pressure;

(iii) Protection between top rail and floor, platform, runway, ramp, or stair treads, equivalent at least to that afforded by a standard intermediate rail;

(iv) Elimination of overhang of rail ends unless such overhang does not constitute a hazard; such as, baluster railings, scrollwork railings, paneled railings.

(4) A standard toeboard shall be a minimum of four inches nominal in vertical height from its top edge to the level of the floor, platform, runway, or ramp. It shall be securely fastened in place and with not more than one-quarter-inch clearance above floor level. It may be made of any substantial material either solid or with openings not over one inch in greatest dimension.

Where material is piled to such height that a standard toeboard does not provide protection, paneling from floor to intermediate rail, or to top rail shall be provided.

(5) A handrail shall consist of a lengthwise member mounted directly on a wall or partition by means of brackets attached to the lower side of the handrail so as to offer no obstruction to a smooth surface along the top and both sides of the handrail. The handrail shall be of rounded or other section that will furnish an adequate handhold for anyone grasping it to avoid falling. The ends of the handrail should be turned in to the supporting wall or otherwise arranged so as not to constitute a projection hazard.

(a) The height of handrails shall be not more than thirty-four inches nor less than thirty inches from upper surface of handrail to surface of tread in line with face of riser or to surface of ramp.

(b) The size of handrails shall be: When of hardwood, at least two inches in diameter; when of metal pipe, at least one and one-half inches in diameter. The length of brackets shall be such as will give a clearance between handrail and wall or any projection thereon of at least one and one-half inches. The spacing of brackets shall not exceed eight feet.

(c) The mounting of handrails shall be such that the completed structure is capable of withstanding a load of at least two hundred pounds applied in any direction at any point on the rail.

(6) All handrails and railings shall be provided with a clearance of not less than one and one-half inches between the handrail or railing and any other object.

(7) Floor opening covers may be of any material that meets the following strength requirements:

(a) Trench or conduit covers and their supports, when located in plant roadways, shall be designed to carry a truck rear-axle load of at least twenty thousand pounds.

(b) Manhole covers and their supports, when located in plant roadways, shall comply with local standard highway requirements if any; otherwise, they shall be designed to carry a truck rear-axle of at least twenty thousand pounds.

(c) The construction of floor opening covers may be of any material that meets the strength requirements. Covers projecting not more than one inch above the floor level may be used providing all edges are chamfered to an angle with the horizontal of not over thirty degrees. All hinges, handles, bolts, or other parts shall set flush with the floor or cover surface.

(8) Skylight screens shall be of such construction and mounting that they are capable of withstanding a load of at least two hundred pounds applied perpendicularly at any one area on the screen. They shall also be of such construction and mounting that under ordinary loads or impacts, they will not deflect downward sufficiently to break the glass below them. The construction shall be of grillwork with openings not more than four inches long or of slatwork with openings not more than two inches wide with length unrestricted.

(9) Wall opening barriers (rails, rollers, picket fences, and half doors) shall be of such construction and mounting that, when in place at the opening, the barrier is capable of withstanding a load of at least two hundred pounds applied in any direction (except upward) at any point on the top rail or corresponding member.

(10) Wall opening grab handles shall be not less than twelve inches in length and shall be so mounted as to give one and one-half inches clearance from the side framing of the wall opening. The size, material, and anchoring of the grab handle shall be such that the completed structure is capable of withstanding a load of at least two hundred pounds applied in any direction at any point of the handle.

(11) Wall opening screens shall be of such construction and mounting that they are capable of withstanding a load of at least two hundred pounds applied horizontally at any point on the near side of the screen. They may be of solid construction, of grillwork with openings not more than eight inches long, or of slatwork with openings not more than four inches wide with length unrestricted.

[Statutory Authority: RCW 49.17.010, 49.17.040, 49.17.050, and 49.17.060. 04-07-161, § 296-24-75011, filed 3/23/04, effective 6/1/04. Statutory Authority: Chapter 49.17 RCW. 91-03-044 (Order 90-18), § 296-24-75011, filed 1/10/91, effective 2/12/91; 89-11-035 (Order 89-03), § 296-24-75011, filed 5/15/89, effective 6/30/89. Statutory Authority: RCW 49.17.040, 49.17.150, and 49.17.240. 79-08-115 (Order 79-9), § 296-24-75011, filed 7/31/79; Order 73-5, § 296-24-75011, filed 5/9/73 and Order 73-4, § 296-24-75011, filed 5/7/73.]

WAC 296-24-765 Fixed industrial stairs.

[Order 73-5, § 296-24-765, filed 5/9/73 and Order 73-4, § 296-24-765, filed 5/7/73.]

WAC 296-24-76501 Terms. The following terms shall have the meaning ascribed in this section when referred to in WAC 296-24-76503 through 296-24-76523 unless the context requires otherwise.

(1) Handrail. A single bar or pipe supported on brackets from a wall or partition to provide a continuous handhold for persons using a stair.

(2) Nose, nosing. That portion of a tread projecting beyond the face of the riser immediately below.

(3) Open riser. The air space between the treads of stairways without upright members (risers).

(4) Platform. An extended step or landing breaking a continuous run of stairs.

(5) Railing. A vertical barrier erected along exposed sides of stairways and platforms to prevent falls of persons. The top member of railing usually serves as a handrail.

(6) Rise. The vertical distance from the top of a tread to the top of the next higher tread.

(7) Riser. The upright member of a step situated at the back of a lower tread and near the leading edge of the next higher tread.

(8) Stairs, stairway. A series of steps leading from one level or floor to another, or leading to platforms, pits, boiler rooms, crossovers, or around machinery, tanks, and other equipment that are used more or less continuously or routinely by employees, or only occasionally by specific individuals. A series of steps and landings having three or more risers constitutes stairs or stairway.

(9) Tread. The horizontal member of a step.

(10) Tread run. The horizontal distance from the leading edge of a tread to the leading edge of an adjacent tread.

(11) Tread width. The horizontal distance from front to back of tread including nosing when used.

[Order 73-5, § 296-24-76501, filed 5/9/73 and Order 73-4, § 296-24-76501, filed 5/7/73.]

WAC 296-24-76503 Application of requirements. This section contains specifications for the safe design and construction of fixed general industrial stairs. This classification includes interior and exterior stairs around machinery, tanks, and other equipment, and stairs leading to or from floors, platforms, or pits. This section does not apply to stairs used for fire exit purposes, to construction operations, to private buildings or residences, or to articulated stairs, such as may be installed on floating roof tanks or on dock facilities, the angle of which changes with the rise and fall of the base support.

When stairs of public and private buildings are located at loading or receiving docks, in maintenance areas, etc., or are used exclusively by employees, the term "fixed industrial steps" will apply and be evaluated accordingly.

[Statutory Authority: Chapter 49.17 RCW. 90-03-029 (Order 89-20), § 296-24-76503, filed 1/11/90, effective 2/26/90; Order 73-5, § 296-24-76503, filed 5/9/73 and Order 73-4, § 296-24-76503, filed 5/7/73.]

WAC 296-24-76507 Stair strength. Fixed stairways shall be designed and constructed to carry a load of five times the normal live load anticipated but never of less strength than to carry safely a moving concentrated load of 1,000 pounds.

[Order 73-5, § 296-24-76507, filed 5/9/73 and Order 73-4, § 296-24-76507, filed 5/7/73.]

WAC 296-24-76509 Stair width. Fixed stairways shall have a minimum width of 22 inches.

[Order 73-5, § 296-24-76509, filed 5/9/73 and Order 73-4, § 296-24-76509, filed 5/7/73.]

WAC 296-24-76511 Angle of stairway rise. (1) Fixed stairs shall be installed at angles to the horizontal of between thirty degrees and fifty degrees. Any uniform combination of rise/tread dimensions may be used that will result in a stairway at any angle to the horizontal within the permissible range. Table D-1 gives rise/tread dimensions which will produce a stairway within the permissible range, stating the angle to the horizontal produced by each combination. However, the rise/tread combinations are not limited to those given in Table D-1.

(2) Because of space limitations a permanent stairway sometimes has to be installed at an angle above the fifty degree critical angle. Such installations are commonly called inclined ladders or ship's ladders, which shall have handrails on both sides and open risers. They shall be capable of sustaining a live load of one hundred pounds per square foot with a safety factor of four. The following preferred and critical angles from the horizontal shall be considered for inclined ladders and ship's ladders:

(a) Thirty-five to sixty degrees - Preferred angle from horizontal.

(b) Sixty to seventy degrees - Critical angle from horizontal.

[Statutory Authority: Chapter 49.17 RCW. 89-11-035 (Order 89-03), § 296-24-76511, filed 5/15/89, effective 6/30/89; Order 73-5, § 296-24-76511, filed 5/9/73 and Order 73-4, § 296-24-76511, filed 5/7/73.]

WAC 296-24-76513 Stair treads. Each tread and the top landing of a stairway, where risers are used, should have a nose which extends one-half inch to 1 inch beyond the face of the lower riser. Noses should have an even leading edge. All treads shall be reasonably slip-resistant and the nosings shall be of nonslip finish. Welded bar grating treads without nosings are acceptable providing the leading edge can be readily identified by personnel descending the stairway and provided the tread is serrated or is of definite nonslip design. Rise height and tread width shall be uniform throughout any flight of stairs including any foundation structure used as one or more treads of the stairs.

TABLE D-1

Angle to horizontal	Rise (in inches)	Tread run (in inches)
30°35'	6 1/2	11
32°08'	6 3/4	10 3/4
33°41'	7	10 1/2
35°16'	7 1/4	10 1/4
36°52'	7 1/2	10
38°29'	7 3/4	9 3/4
40°08'	8	9 1/2
41°44'	8 1/4	9 1/4
43°22'	8 1/2	9
45°00'	8 3/4	8 3/4
46°38'	9	8 1/2
48°16'	9 1/4	8 1/4
49°54'	9 1/2	8

[Order 73-5, § 296-24-76513, filed 5/9/73 and Order 73-4, § 296-24-76513, filed 5/7/73.]

WAC 296-24-76515 Length of stairways. Long flights of stairs, unbroken by landings or intermediate platforms, should be avoided. Consideration should be given to providing intermediate platforms where practical and where such stairways are in frequent use. Stairway platforms shall be no less than the width of a stairway and a minimum of 30 inches in length measured in the direction of travel.

[Order 73-5, § 296-24-76515, filed 5/9/73 and Order 73-4, § 296-24-76515, filed 5/7/73.]

WAC 296-24-76519 Vertical clearance. Vertical clearance above any stair tread to an overhead obstruction shall be at least 7 feet measured from the leading edge of the tread.

[Order 73-5, § 296-24-76519, filed 5/9/73 and Order 73-4, § 296-24-76519, filed 5/7/73.]

WAC 296-24-76521 Open risers. Stairs having treads of less than 9-inch width should have open risers.

[Order 73-5, § 296-24-76521, filed 5/9/73 and Order 73-4, § 296-24-76521, filed 5/7/73.]

WAC 296-24-76523 General. Open grating type treads are desirable for outside stairs.

[Order 73-5, § 296-24-76523, filed 5/9/73 and Order 73-4, § 296-24-76523, filed 5/7/73.]

WAC 296-24-76555 Alternating tread-type stairs. Alternating tread-type stairs have a series of steps between 50 and 70 degrees from horizontal, attached to a center support rail in an alternating manner so that a user of the stairs never has both feet at the same level at the same time. (See Figure D-12.)

(1) Alternating tread-type stairs shall be designed, installed, used, and maintained in accordance with approved manufacturer's specifications, and shall have the following:

(a) Stair rails on all open sides;

(b) Handrails on both sides of enclosed stairs;

(c) Stair rails and handrails of such configuration as to provide an adequate handhold for a user grasping it to avoid a fall;

(d) A minimum of 17 inches between handrails;

(e) A minimum width of 22 inches overall;

(f) A minimum tread depth of 8 inches;

(g) A minimum tread width of 7 inches; and

(h) A maximum rise of 9 1/2 inches to the tread surface of the next alternating tread.

(2) Alternating tread-type stairs shall not have more than a 20-foot continuous rise. Where more than a 20-foot rise is necessary to reach the top of a required stair, one or more intermediate platforms shall be provided in accordance with WAC 296-24-76515.

(3) Stairs and platforms shall be installed so the top landing of the alternating tread stair is flush with the top of the landing platform.

(4) Stair design and construction shall sustain a load of not less than five times the normal live load, but never less strength than to carry safely a moving concentrated load of 1,000 pounds.

(5) Treads shall be equipped with slip-resistant surfaces.

(6) Where a platform or landing is used, the width shall not be less than the width of the stair nor less than 30-inch depth in the direction of travel. Stairs shall be flush with the top of the landing platform.

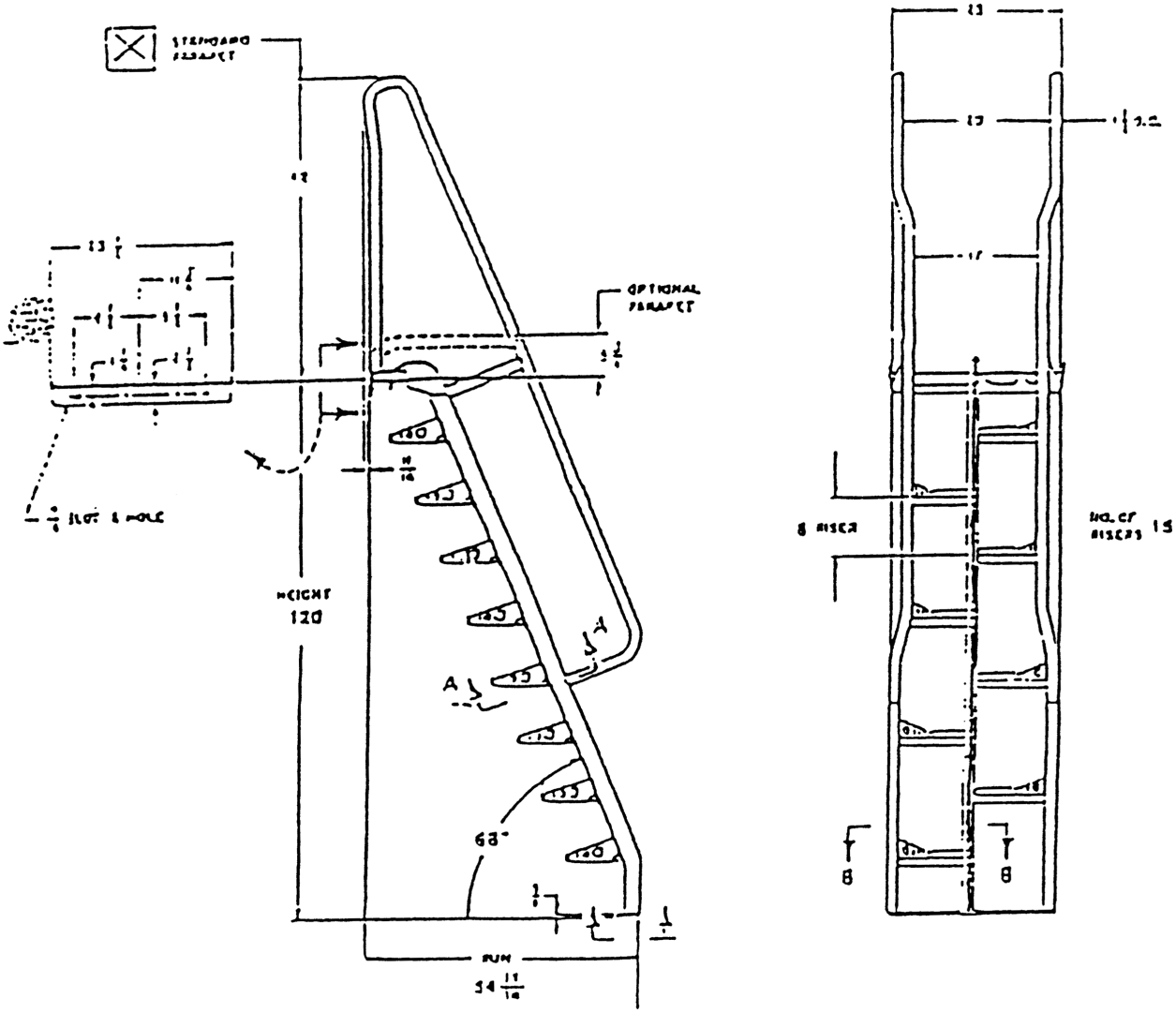

[Statutory Authority: Chapter 49.17 RCW. 92-17-022 (Order 92-06), § 296-24-76555, filed 8/10/92, effective 9/10/92; 91-03-044 (Order 90-18), § 296-24-76555, filed 1/10/91, effective 2/12/91.]

WAC 296-24-855 Other working surfaces.

[Order 73-5, § 296-24-855, filed 5/9/73 and Order 73-4, § 296-24-855, filed 5/7/73.]

WAC 296-24-85501 Dockboards (bridge plates). (1) Portable and powered dockboards shall be strong enough to carry the load imposed on them.

(2) Portable dockboards shall be secured in position, either by being anchored or equipped with devices which will prevent their slipping.

(3) Powered dockboards shall be designed and constructed in accordance with Commercial Standard CS202-56 (1961) "Industrial Lifts and Hinged Loading Ramps" published by the U.S. Department of Commerce.

(4) Handholds, or other effective means, shall be provided on portable dockboards to permit safe handling.

(5) Positive protection shall be provided to prevent railroad cars from being moved while dockboards or bridge plates are in position.

[Order 73-5, § 296-24-85501, filed 5/9/73 and Order 73-4, § 296-24-85501, filed 5/7/73.]

WAC 296-24-85503 Forging machine area. (1) Machines shall be so located as to give (a) enough clearance between machines so that the movement of one operator will not interfere with the work of another, (b) ample room for cleaning machines and handling the work, including material and scrap. The arrangement of machines shall be such that operators will not stand in aisles.

(2) Aisles shall be provided of sufficient width to permit the free movement of employees bringing and removing material. This aisle space is to be independent of working and storage space and should be defined by marking.

(3) Wood platforms used on the floor in front of machines shall be substantially constructed with nonslip surfaces.

[Statutory Authority: RCW 49.17.040, 49.17.150, and 49.17.240. 79-08-115 (Order 79-9), § 296-24-85503, filed 7/31/79; Order 73-5, § 296-24-85503, filed 5/9/73 and Order 73-4, § 296-24-85503, filed 5/7/73.]

WAC 296-24-85505 Veneer machinery. (1) Sides of steam vats shall extend to a height of not less than 36 inches above the floor, working platform, or ground.

(2) Large steam vats divided into sections shall be provided with substantial walkways between sections. Each walkway shall be provided with a standard handrail on each exposed side. These handrails may be removable, if necessary.

(3) Covers shall be removed only from that portion of steaming vats on which people are working and a portable railing shall be placed at this point to protect the operators.

(4) Workers shall not ride or step on logs in steam vats.

[Statutory Authority: Chapter 49.17 RCW. 94-15-096 (Order 94-07), § 296-24-85505, filed 7/20/94, effective 9/20/94; Order 73-5, § 296-24-85505, filed 5/9/73 and Order 73-4, § 296-24-85505, filed 5/7/73.]

PART J-2
SCAFFOLDS

WAC 296-24-862 Nonmandatory appendices. Nonmandatory Appendix A to Part J-2, Scaffold Specifications.

This Appendix provides nonmandatory guidelines to assist employers in complying with the requirements of Part J-2 of this chapter. An employer may use these guidelines and tables as a starting point for designing scaffold systems. However, the guidelines do not provide all the information necessary to build a complete system, and the employer is still responsible for designing and assembling these components in such a way that the completed system will meet the requirements of WAC 296-24-86010(1). Scaffold components which are not selected and loaded in accordance with this Appendix, and components for which no specific guidelines or tables are given in this Appendix (e.g., joints, ties, components for wood pole scaffolds more than 60 feet in height, components for heavy-duty horse scaffolds, components made with other materials, and components with other dimensions, etc.) must be designed and constructed in accordance with the capacity requirements of WAC 296-24-86010(1), and loaded in accordance with WAC 296-24-86010 (4)(a).

Index to Appendix A for Part J-2

1. General guidelines and tables.
2. Specific guidelines and tables.
(a) Pole scaffolds:
Single-pole wood pole scaffolds.
Independent wood pole scaffolds.
(b) Tube and coupler scaffolds.
(c) Fabricated frame scaffolds.
(d) Plasterers', decorators' and large area scaffolds.
(e) Bricklayers' square scaffolds.
(f) Horse scaffolds.
(g) Form scaffolds and carpenters' bracket scaffolds.
(h) Roof bracket scaffolds.
(i) Outrigger scaffolds (one level).
(j) Pump jack scaffolds.
(k) Ladder jack scaffolds.
(l) Window jack scaffolds.
(m) Crawling boards (chicken ladders).
(n) Step, platform and trestle ladder scaffolds.
(o) Single-point adjustable suspension scaffolds.
(p) Two-point adjustable suspension scaffolds.
(q)(1) Stonesetters' multipoint adjustable suspension scaffolds.
(q)(2) Masons' multipoint adjustable suspension scaffolds.
(r) Catenary scaffolds.
(s) Float (ship) scaffolds.
(t) Interior hung scaffolds.
(u) Needle beam scaffolds.
(v) Multilevel suspension scaffolds.
(w) Mobile scaffolds.
(x) Repair bracket scaffolds.
(y) Stilts.
(z) Tank builders' scaffolds.

1. General guidelines and tables.

(a) The following tables, and the tables in Part 2—Specific guidelines and tables, assume that all load-carrying timber members (except planks) of the scaffold are a minimum of 1,500 lb-f/in(2) (stress grade) construction grade lumber. All dimensions are nominal sizes as provided in the American Softwood Lumber Standards, dated January 1970, except that, where rough sizes are noted, only rough or undressed lumber of the size specified will satisfy minimum requirements.

(b) Solid sawn wood used as scaffold planks must be selected for such use following the grading rules established by a recognized lumber grading association or by an independent lumber grading inspection agency. Such planks must be identified by the grade stamp of such association or agency. The association or agency and the grading rules under which the wood is graded must be certified by the Board of Review, American Lumber Standard Committee, as set forth in the American Softwood Lumber Standard of the U.S. Department of Commerce.

(i) Allowable spans must be determined in compliance with the National Design Specification for Wood Construction published by the National Forest Products Association; paragraph 5 of ANSI A10.8-1988 Scaffolding-Safety Requirements published by the American National Standards Institute; or for 2 x 10 inch (nominal) or 2 x 9 inch (rough) solid sawn wood planks, as shown in the following table:

Maximum intended nominal load (lb/ft^2)	Maximum permissible span using full thickness undressed lumber (ft)	Maximum permissible span using nominal thickness lumber (ft)
25	10	8
50	8	6
75	6	

(ii) The maximum permissible span for 1 1/4 x 9-inch or wider wood plank of full thickness with a maximum intended load of 50 lb/ft.(2) must be 4 feet.

(c) Fabricated planks and platforms may be used in lieu of solid sawn wood planks. Maximum spans for such units must be as recommended by the manufacturer based on the maximum intended load being calculated as follows:

Rated load capacity	Intended load
Light-duty	*25 pounds per square foot applied uniformly over the entire span area.

Rated load capacity	Intended load
Medium-duty	*50 pounds per square foot applied uniformly over the entire span area.
Heavy-duty	*75 pounds per square foot applied uniformly over the entire span area.
One-person	*250 pounds placed at the center of the span (total 250 pounds).
Two-person	*250 pounds placed 18 inches to the left and right of the center of the span (total 500 pounds).
Three-person	*250 pounds placed at the center of the span and 250 pounds placed 18 inches to the left and right of the center of the span (total 750 pounds).

Note: Platform units used to make scaffold platforms intended for light-duty use must be capable of supporting at least 25 pounds per square foot applied uniformly over the entire unit-span area, or a 250-pound point load placed on the unit at the center of the span, whichever load produces the greater shear force.

(d) Guardrails must be as follows:

(i) Toprails must be equivalent in strength to 2 inch by 4 inch lumber; or

1 1/4 inch x 1/8 inch structural angle iron; or

1 inch x .070 inch wall steel tubing; or 1.990 inch x .058 inch wall aluminum tubing.

(ii) Midrails must be equivalent in strength to 1 inch by 6 inch lumber; or

1 1/4 inch x 1 1/4 inch x 1/8 inch structural angle iron; or

1 inch x .070 inch wall steel tubing; or

1.990 inch x .058 inch wall aluminum tubing.

(iii) Toeboards must be equivalent in strength to 1 inch by 4 inch lumber; or

1 1/4 inch x 1 1/4 inch structural angle iron; or

1 inch x .070 inch wall steel tubing; or

1.990 inch x .058 inch wall aluminum tubing.

(iv) Posts must be equivalent in strength to 2 inch by 4 inch lumber; or

1 1/4 inch x 1 1/4 inch x 1/8 structural angle iron; or

1 inch x .070 inch wall steel tubing; or

1.990 inch x .058 inch wall aluminum tubing.

(v) Distance between posts must not exceed 8 feet.

(e) Overhead protection must consist of 2 inch nominal planking laid tight, or 3/4-inch plywood.

(f) Screen installed between toeboards and midrails or toprails must consist of No. 18 gauge U.S. Standard wire one inch mesh.

2. Specific guidelines and tables.

(a) Pole Scaffolds.

Single Pole Wood Pole Scaffolds				
	Light duty up to 20 feet high	Light duty up to 60 feet high	Medium duty up to 60 feet high	Heavy duty up to 60 feet high
Maximum intended load (lbs/ft^2)	25	25	50	75
Poles or uprights	2 x 4 in.	4 x 4 in.	4 x 4 in.	4 x 6 in.
Maximum pole spacing (longitudinal)	6 feet	10 feet	8 feet	6 feet

Single Pole Wood Pole Scaffolds				
Maximum pole spacing (transverse)	5 feet	5 feet	5 feet	5 feet
Runners	1 x 4 in.	1 1/4 x 9 in.	2 x 10 in.	2 x 10 in.
Bearers and maximum spacing of bearers: 3 feet	2 x 4 in.	2 x 4 in.	2 x 10 in. or 3 x 4 in.	2 x 10 in. or 3 x 5 in.
5 feet	2 x 6 in. or 3 x 4 in.	2 x 6 in. or 3 x 4 in. (rough)	2 x 10 in. or 3 x 4 in.	2 x 10 in. or 3 x 5 in.
6 feet	—-	—-	2 x 10 in. or 3 x 4 in.	2 x 10 in. or 3 x 5 in.
8 feet	—-	—-	2 x 10 in. or 3 x 4 in.	
Planking	1 1/4 x 9 in.	2 x 10 in.	2 x 10 in.	2 x 10 in.
Maximum vertical spacing of horizontal members	7 feet	9 feet	7 feet	6 ft. 6 in.
Bracing horizontal	1 x 4 in.	1 x 4 in.	1 x 6 in. or 1 1/4 x 4 in.	2 x 4 in.
Bracing diagonal	1 x 4 in.	1 x 4 in.	1 x 4 in.	2 x 4 in.
Tie-ins	1 x 4 in.	1 x 4 in.	1 x 4 in.	1 x 4 in.

Note: All members except planking are used on edge. All wood bearers must be reinforced with 3/16 x 2 inch steel strip, or the equivalent, secured to the lower edges for the entire length of the bearer.

Independent Wood Pole Scaffolds				
	Light duty up to 20 feet high	Light duty up to 60 feet high	Medium duty up to 60 feet high	Heavy duty up to 60 feet high
Maximum intended load	25 lbs/ft^2	25 lbs/ft^2	50 lbs/ft^2	75 lbs/ft^2
Poles or uprights	2 x 4 in.	4 x 4 in.	4 x 4 in.	4 x 4 in.
Maximum pole spacing (longitudinal)	6 feet	10 feet	8 feet	6 feet
Maximum (transverse)	6 feet	10 feet	8 feet	8 feet
Runners	1 1/4 x 4 in.	1 1/4 x 9 in.	2 x 10 in.	2 x 10 in.
Bearers and maximum spacing of bearers: 3 feet	2 x 4 in.	2 x 4 in.	2 x 10 in. (rough)	2 x 10 in.
6 feet	2 x 6 in. or 3 x 4 in.	2 x 10 in. (rough) or 3 x 8 in.	2 x 10 in.	2 x 10 in. (rough)
8 feet	2 x 6 in. or 3 x 4 in.	2 x 10 in. (rough) or 3 x 8 in.	2 x 10 in.	
10 feet	3 x 4 in.	2 x 6 in. (rough) or 3 x 3 in.	2 x 10 in.	
Planking	1 1/4 x 9 in.	2 x 10 in.	2 x 10 in.	2 x 10 in.
Maximum vertical spacing of horizontal members	7 feet	7 feet	6 feet	6 feet
Bracing horizontal	1 x 4 in.	1 x 4 in.	1 x 6 in. or 1 1/4 x 4 in.	2 x 4 in.

Independent Wood Pole Scaffolds				
Bracing diagonal	1 x 4 in.	1 x 4 in.	1 x 4 in.	2 x 4 in.
Tie-ins	1 x 4 in.	1 x 4 in.	1 x 4 in.	1 x 4 in.

Note: All members except planking are used on edge. All wood bearers must be reinforced with 3/16 x 2 inch steel strip, or the equivalent, secured to the lower edges for the entire length of the bearer.

(b) Tube and coupler scaffolds.

Minimum Size of Members			
	Light duty	Medium duty	Heavy duty
Maximum intended load	25 lbs/ft^2	50 lbs/ft^2	75 lbs/ft^2
Posts, runners and braces	Nominal 2 in. (1.90 inches) OD steel tube or pipe.	Nominal 2 in. (1.90 inches) OD steel tube or pipe.	Nominal 2 in. (1.90 inches) OD steel tube or pipe.
Bearers	Nominal 2 in. (1.90 inches) OD steel tube or pipe and a maximum post spacing of 4 ft. x 10 ft.	Nominal 2 in. (1.90 inches) OD steel tube or pipe and a maximum post spacing of 4 ft. x 7 ft. or Nominal 2 1/2 in. (2.375 in.) OD steel tube or pipe and a maximum post spacing of 6 ft. x 8 ft. (*).	Nominal 2 1/2 in. (2.375 in.) OD steel tube or pipe and a maximum post spacing of 6 ft. x 6 ft.
Maximum runner spacing vertically	6 ft. 6 in.	6 ft. 6 in.	6 ft. 6 in.

(*) Bearers must be installed in the direction of the shorter dimension.

Note: Longitudinal diagonal bracing must be installed at an angle of 45 deg. (+/- 5 deg.).

Maximum Number of Planked Levels

Maximum number of additional planked levels

	Light duty	Medium duty	Heavy duty	Maximum height of scaffold (in feet)
Duty Number of Working Levels:				
1	16	11	6	125
2	11	1	0	125
3	6	0	0	125
4	1	0	0	125

(c) "Fabricated frame scaffolds." Because of their prefabricated nature, no additional guidelines or tables for these scaffolds are being adopted in this Appendix.

(d) "Plasterers', decorators', and large area scaffolds." The guidelines for pole scaffolds or tube and coupler scaffolds (Appendix A (a) and (b)) may be applied.

(e) "Bricklayers' square scaffolds."

Maximum intended load: 50 lb/ft.(2)(*)

Footnote(*): The squares must be set not more than 8 feet apart for light duty scaffolds and not more than 5 feet apart for medium duty scaffolds.

Maximum width: 5 ft.

Maximum height: 5 ft.

Gussets: 1 x 6 in.

Braces: 1 x 8 in.

Legs: 2 x 6 in.

Bearers (horizontal members): 2 x 6 in.

(f) Horse scaffolds.

Maximum intended load (light duty): 25 lb/ft.(2)(**)

Footnote(**): Horses must be spaced not more than 8 feet apart for light duty loads, and not more than 5 feet apart for medium duty loads.

Maximum intended load (medium duty): 50 lb/ft.(2)(**)

Footnote(**): Horses must be spaced not more than 8 feet apart for light duty loads, and not more than 5 feet apart for medium duty loads.

Horizontal members or bearers:

Light duty: 2 x 4 in.

Medium duty: 3 x 4 in.

Legs: 2 x 4 in.

Longitudinal brace between legs: 1 x 6 in.

Gusset brace at top of legs: 1 x 8 in.

Half diagonal braces: 2 x 4 in.

(g) "Form scaffolds and carpenters' bracket scaffolds."

(1) Brackets must consist of a triangular-shaped frame made of wood with a cross-section not less than 2 inches by 3 inches, or of 1 1/4 inch x 1 1/4 inch x 1/8 inch structural angle iron.

(2) Bolts used to attach brackets to structures must not be less than 5/8 inches in diameter.

(3) Maximum bracket spacing must be 8 feet on centers.

(4) No more than two employees must occupy any given 8 feet of a bracket or form scaffold at any one time. Tools and materials must not exceed 75 pounds in addition to the occupancy.

(5) Wooden figure-four scaffolds:

Maximum intended load: 25 lb/ft.(2)

Uprights: 2 x 4 in. or 2 x 6 in.

Bearers (two): 1 x 6 in.

Braces: 1 x 6 in.

Maximum length of bearers (unsupported): 3 ft. 6 in.

(i) Outrigger bearers must consist of two pieces of 1 x 6 inch lumber nailed on opposite sides of the vertical support.

(ii) Bearers for wood figure-four brackets must project not more than 3 feet 6 inches from the outside of the form support, and must be braced and secured to prevent tipping or turning. The knee or angle brace must intersect the bearer at least 3 feet from the form at an angle of approximately 45 degrees, and the lower end must be nailed to a vertical support.

(6) Metal bracket scaffolds:

Maximum intended load: 25 lb/ft.(2)

Uprights: 2 x 4 inch

Bearers: As designed.

Braces: As designed.

(7) Wood bracket scaffolds:

Maximum intended load: 25 lb/ft.(2)

Uprights: 2 x 4 in. or 2 x 6 in.

Bearers: 2 x 6 in.

Maximum scaffold width: 3 ft. 6 in.

Braces: 1 x 6 in.

(h) "Roof bracket scaffolds." No specific guidelines or tables are given.

(i) "Outrigger scaffolds (single level)." No specific guidelines or tables are given.

(j) "Pump jack scaffolds." Wood poles must not exceed 30 feet in height. Maximum intended load — 500 lbs

between poles; applied at the center of the span. Not more than two employees must be on a pump jack scaffold at one time between any two supports. When 2 x 4's are spliced together to make a 4 x 4 inch wood pole, they must be spliced with "10 penny" common nails no more than 12 inches center to center, staggered uniformly from the opposite outside edges.

(k) "Ladder jack scaffolds." Maximum intended load — 25 lb/ft(2). However, not more than two employees must occupy any platform at any one time. Maximum span between supports must be 8 feet.

(l) "Window jack scaffolds." Not more than one employee must occupy a window jack scaffold at any one time.

(m) "Crawling boards (chicken ladders)." Crawling boards must be not less than 10 inches wide and 1 inch thick, with cleats having a minimum 1 x 1 1/2 inch cross-sectional area. The cleats must be equal in length to the width of the board and spaced at equal intervals not to exceed 24 inches.

(n) "Step, platform, and trestle ladder scaffolds." No additional guidelines or tables are given.

(o) "Single-point adjustable suspension scaffolds." Maximum intended load — 250 lbs. Wood seats for boatswains' chairs must be not less than 1 inch thick if made of nonlaminated wood, or 5/8 inches thick if made of marine quality plywood.

(p) "Two-point adjustable suspension scaffolds."

(1) In addition to direct connections to buildings (except window cleaners' anchors) acceptable ways to prevent scaffold sway include angulated roping and static lines. Angulated roping is a system of platform suspension in which the upper wire rope sheaves or suspension points are closer to the plane of the building face than the corresponding attachment points on the platform, thus causing the platform to press against the face of the building. Static lines are separate ropes secured at their top and bottom ends closer to the plane of the building face than the outermost edge of the platform. By drawing the static line taut, the platform is drawn against the face of the building.

(2) On suspension scaffolds designed for a working load of 500 pounds, no more than two employees must be permitted on the scaffold at one time. On suspension scaffolds with a working load of 750 pounds, no more than three employees must be permitted on the scaffold at one time.

(3) Ladder-type platforms. The side stringer must be of clear straight-grained spruce. The rungs must be of straight-grained oak, ash, or hickory, at least 1 1/8 inches in diameter, with 7/8 inch tenons mortised into the side stringers at least 7/8 inch. The stringers must be tied together with tie rods not less than 1/4 inch in diameter, passing through the stringers and riveted up tight against washers on both ends. The flooring strips must be spaced not more than 5/8 inch apart, except at the side rails where the space may be 1 inch. Ladder-type platforms must be constructed in accordance with the following table:

Schedule for Ladder-Type Platforms

Length of Platform	12 feet	14 & 16 feet	18 & 20 feet
Side stringers, minimum cross section (finished sizes):			
At ends	1 3/4 x 2 3/4 in.	1 3/4 x 2 3/4 in.	1 3/4 x 3 in.
At middle	1 3/4 x 3 3/4 in.	1 3/4 x 3 3/4 in.	1 3/4 x 4
Length of Platform	12 feet	14 & 16 feet	18 & 20 feet
Reinforcing strip (minimum)	A 1/8 x 7/8 inch steel reinforcing strip must be attached to the side or underside, full length.		
Rungs	Rungs must be 1 1/8 inch minimum diameter with at least 7/8 inch in diameter tenons, and the maximum spacing must be 12 inches to center.		
Tie rods: Number (minimum)	3	4	4
Diameter (minimum)	1/4 inch	1/4 inch	1/4 inch
Flooring, minimum finished size	1/2 x 2 3/4 in.	1/2 x 2 3/4 in.	1/2 x 2 3/4 in.
Length of Platform	22 & 24 ft.	28 & 30 ft.	
Side stringers, minimum cross section (finished sizes):			
At ends	1 3/4 x 3 in.	1 3/4 x 3 1/2 in.	
At middle	1 3/4 x 4 1/4 in.	1 3/4 x 5 in.	
Reinforcing strip (minimum)	A 1/8 x 7/8 inch steel reinforcing strip must be attached to the side or underside, full length.		
Rungs	Rungs must be 1 1/8 inch minimum diameter with at least 7/8 inch in diameter with at least 7/8 inch in diameter tenons, and the maximum spacing must be 12 inches to center.		
Tie rods: Number (minimum)	5	6	
Diameter (minimum)	1/4 in.	1/4 in.	
Flooring, minimum finished size	1/2 x 2 3/4 in.	1/2 x 2 3/4 in.	

(4) Plank-Type Platforms. Plank-type platforms must be composed of not less than nominal 2 x 8 inch unspliced planks, connected together on the underside with cleats at intervals not exceeding 4 feet, starting 6 inches from each end. A bar or other effective means must be securely fastened to the platform at each end to prevent the platform from slipping off the hanger. The span between hangers for plank-type platforms must not exceed 10 feet.

(5) Beam-Type Platforms. Beam platforms must have side stringers of lumber not less than 2 x 6 inches set on edge. The span between hangers must not exceed 12 feet when beam platforms are used. The flooring must be supported on 2 x 6 inch cross beams, laid flat and set into the upper edge of the stringers with a snug fit, at intervals of not more than 4 feet, securely nailed to the cross beams. Floor-boards must not be spaced more than 1/2 inch apart.

(q)(1) "Multipoint adjustable suspension scaffolds and stonesetters' multipoint adjustable suspension scaffolds." No specific guidelines or tables are given for these scaffolds.

(q)(2) "Masons' multipoint adjustable suspension scaffolds." Maximum intended load — 50 lb/ft(2). Each outrigger beam must be at least a standard 7 inch, 15.3 pound steel I-beam, at least 15 feet long. Such beams must not project more than 6 feet 6 inches beyond the bearing point. Where the overhang exceeds 6 feet 6 inches, outrigger beams must be composed of stronger beams or multiple beams.

(r) "Catenary scaffolds."

(1) Maximum intended load — 500 lbs.

(2) Not more than two employees must be permitted on the scaffold at one time.

(3) Maximum capacity of come-along must be 2,000 lbs.

(4) Vertical pickups must be spaced not more than 50 feet apart.

(5) Ropes must be equivalent in strength to at least 1/2 inch (1.3 cm) diameter improved plow steel wire rope.

(s) "Float (ship) scaffolds."

(1) Maximum intended load — 750 lbs.

(2) Platforms must be made of 3/4 inch plywood, equivalent in rating to American Plywood Association Grade B-B, Group I, Exterior.

(3) Bearers must be made from 2 x 4 inch, or 1 x 10 inch rough lumber. They must be free of knots and other flaws.

(4) Ropes must be equivalent in strength to at least 1 inch (2.5 cm) diameter first grade manila rope.

(t) "Interior hung scaffolds."

Bearers (use on edge): 2 x 10 in.

Maximum intended load: Maximum span

25 lb/ft.(2): 10 ft.

50 lb/ft.(2): 10 ft.

75 lb/ft.(2): 7 ft.

(u) "Needle beam scaffolds."

Maximum intended load: 25 lb/ft.(2)

Beams: 4 x 6 in.

Maximum platform span: 8 ft.

Maximum beam span: 10 ft.

(1) Ropes must be attached to the needle beams by a scaffold hitch or an eye splice. The loose end of the rope must be tied by a bowline knot or by a round turn and a half hitch.

(2) Ropes must be equivalent in strength to at least 1 inch (2.5 cm) diameter first grade manila rope.

(v) "Multilevel suspension scaffolds." No additional guidelines or tables are being given for these scaffolds.

(w) "Mobile scaffolds." Stability test as described in the ANSI A92 series documents, as appropriate for the type of scaffold, can be used to establish stability for the purpose of WAC 296-24-86015 (23)(f)(ii).

(x) "Repair bracket scaffolds." No additional guidelines or tables are being given for these scaffolds.

(y) "Stilts." No specific guidelines or tables are given.

(z) "Tank builder's scaffold."

(1) The maximum distance between brackets to which scaffolding and guardrail supports are attached must be no more than 10 feet 6 inches.

(2) Not more than three employees must occupy a 10 feet 6 inch span of scaffold planking at any time.

(3) A taut wire or synthetic rope supported on the scaffold brackets must be installed at the scaffold plank level between the innermost edge of the scaffold platform and the curved plate structure of the tank shell to serve as a safety line in lieu of an inner guardrail assembly where the space between the scaffold platform and the tank exceeds 12 inches (30.48 cm). In the event the open space on either side of the rope exceeds 12 inches (30.48 cm), a second wire or synthetic rope appropriately placed, or guardrails in accordance with WAC 296-24-86010 (7)(d), must be installed in order to reduce that open space to less than 12 inches (30.48 cm).

(4) Scaffold planks of rough full-dimensioned 2-inch (5.1 cm) x 12-inch (30.5 cm) Douglas Fir or Southern Yellow Pine of Select Structural Grade must be used. Douglas Fir planks must have a fiber stress of at least 1900 lb/in(2) (130,929 n/cm(2)) and a modulus of elasticity of at least 1,900,000 lb/in(2) (130,929,000 n/cm(2)), while Yellow Pine planks must have a fiber stress of at least 2500 lb/in(2) (172,275 n/cm(2)) and a modulus of elasticity of at least 2,000,000 lb/in(2) (137,820,000 n/cm(2)).

(5) Guardrails must be constructed of a taut wire or synthetic rope, and must be supported by angle irons attached to brackets welded to the steel plates. These guardrails must comply with WAC 296-24-86010 (7)(d) guardrail supports must be located at no greater than 10 feet 6 inch intervals.

Nonmandatory Appendix C to Part J-2, List of National Consensus Standards.

ANSI/SIA A92.2-1990 Vehicle-Mounted Elevating and Rotating Aerial Devices

ANSI/SIA A92.3-1990 Manually Propelled Elevating Aerial Platforms

ANSI/SIA A92.5-1990 Boom Supported Elevating Work Platforms

ANSI/SIA A92.6-1990 Self-Propelled Elevating Work Platforms

ANSI/SIA A92.7-1990 Airline Ground Support Vehicle-Mounted Vertical Lift Devices

ANSI/SIA A92.8-1993 Vehicle-Mounted Bridge Inspection and Maintenance Devices

ANSI/SIA A92.9-1993 Mast-Climbing Work Platforms

Nonmandatory Appendix D to Part J-2, List of Training Topics for Scaffold Erectors and Dismantlers.

This Appendix D is provided to serve as a guide to assist employers when evaluating the training needs of employees erecting or dismantling supported scaffolds.

The Agency believes that employees erecting or dismantling scaffolds should be trained in the following topics:

*General Overview of Scaffolding
*regulations and standards
*erection/dismantling planning
*PPE and proper procedures
*fall protection
*materials handling
*access
*working platforms
*foundations
*guys, ties and braces
*Tubular Welded Frame Scaffolds
*specific regulations and standards
*components
*parts inspection
*erection/dismantling planning
*guys, ties and braces
*fall protection
*general safety
*access and platforms
*erection/dismantling procedures
*rolling scaffold assembly
*putlogs
*Tube and Clamp Scaffolds
*specific regulations and standards
*components
*parts inspection
*erection/dismantling planning
*guys, ties and braces
*fall protection
*general safety
*access and platforms

*erection/dismantling procedures
*buttresses, cantilevers, & bridges
*System Scaffolds
*specific regulations and standards
*components
*parts inspection
*erection/dismantling planning
*guys, ties and braces
*fall protection
*general safety
*access and platforms
*erection/dismantling procedures
*buttresses, cantilevers, & bridges

Scaffold erectors and dismantlers should all receive the general overview, and, in addition, specific training for the type of supported scaffold being erected or dismantled.

Nonmandatory Appendix E to Part J-2, Drawings and Illustrations.

This Appendix provides drawings of particular types of scaffolds and scaffold components, and graphic illustrations of bracing patterns and tie spacing patterns.

This Appendix is intended to provide visual guidance to assist the user in complying with the requirements of Part J-2, chapter 296-24 WAC.

BRACING-TUBE & COUPLER SCAFFOLDS

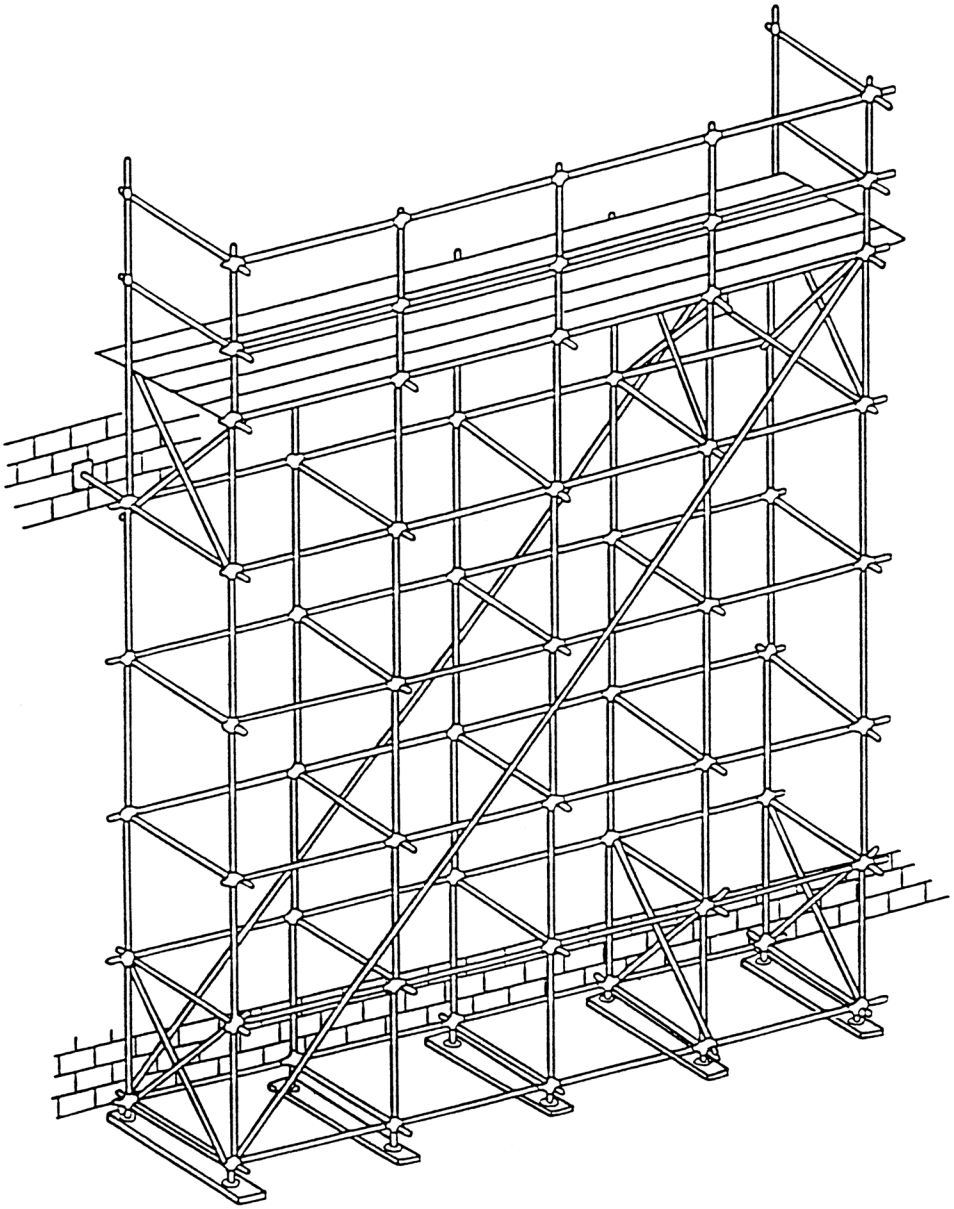

SUSPENDED SCAFFOLD PLATFORM WELDING PRECAUTIONS

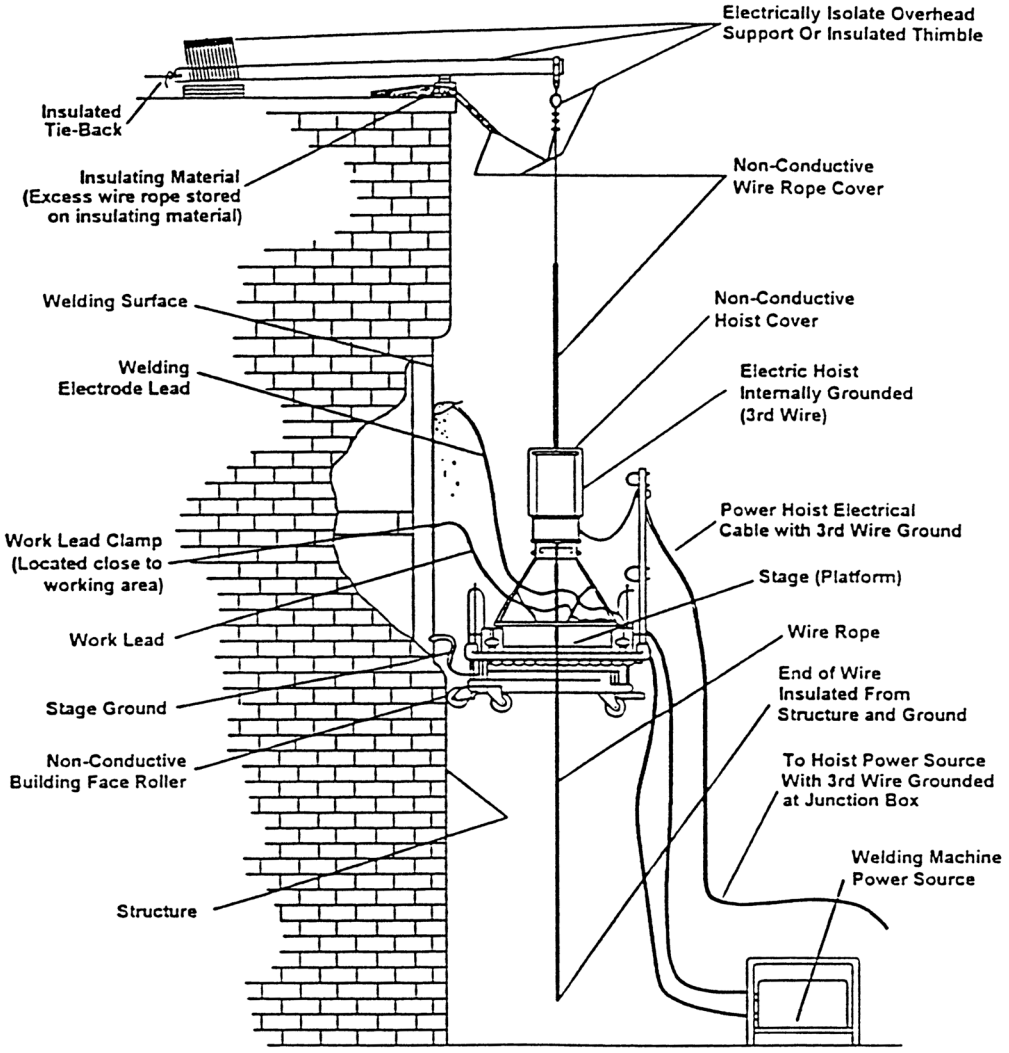

MAXIMUM VERTICAL TIE SPACING WIDER THAN 3'-0" BASES

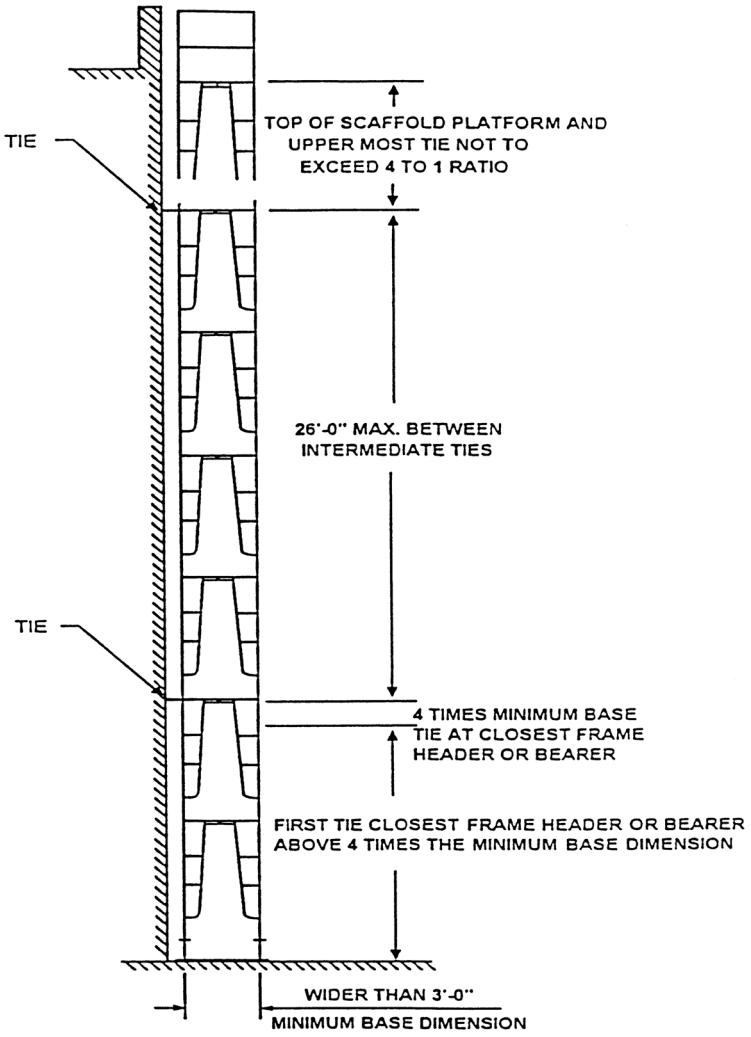

MAXIMUM VERTICAL TIE SPACING 3'-0" AND NARROWER BASES

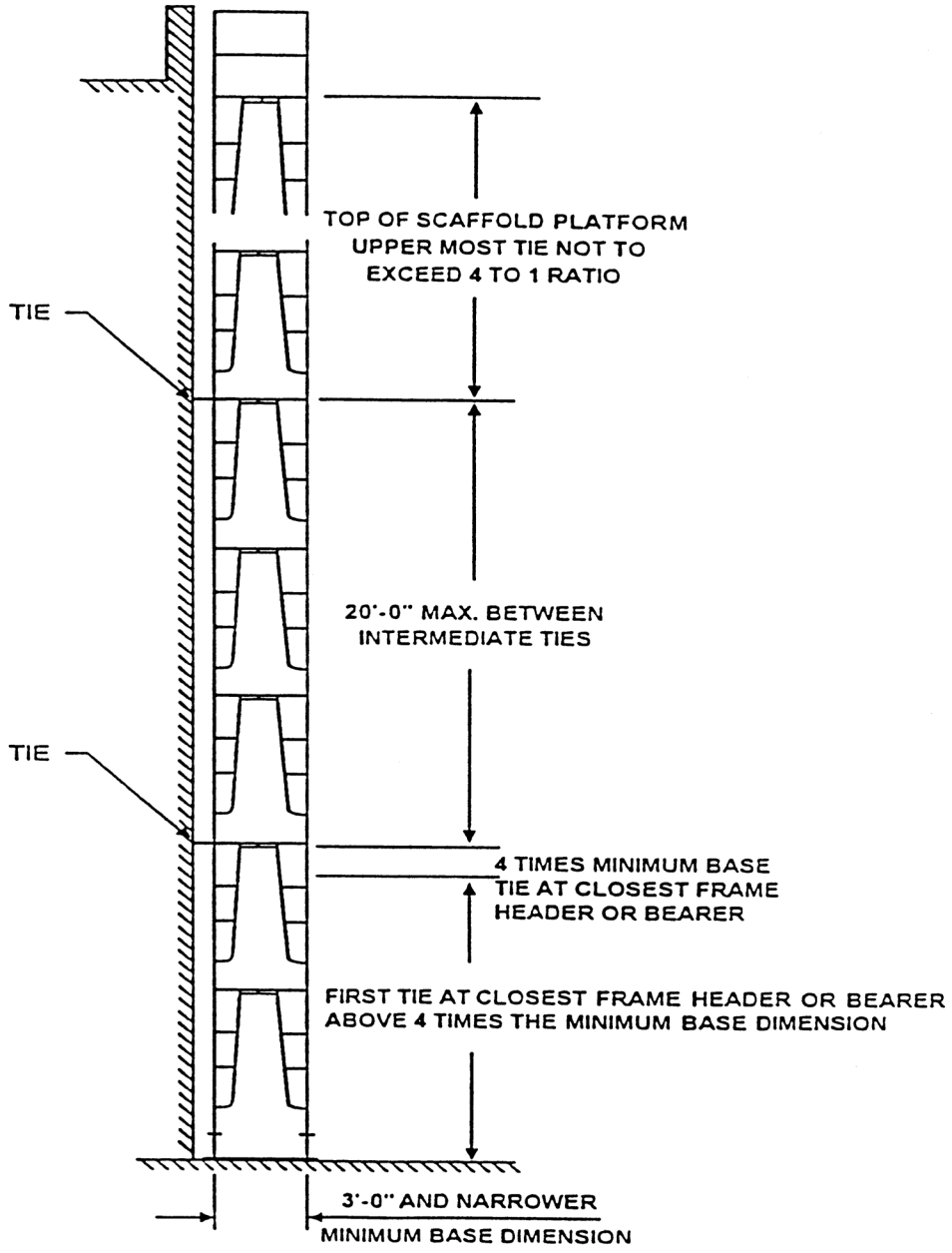

SYSTEM SCAFFOLD

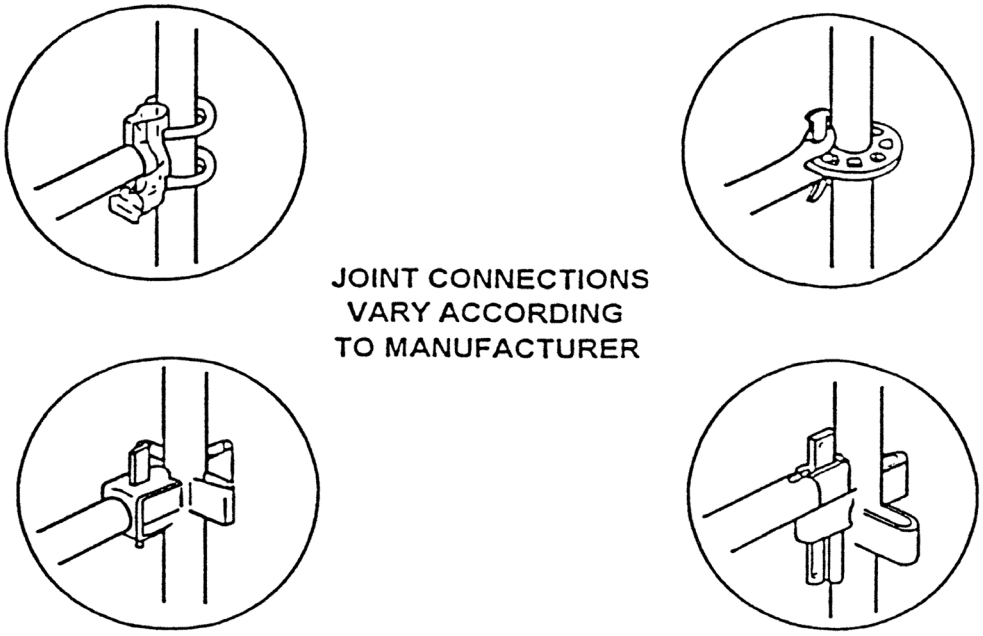

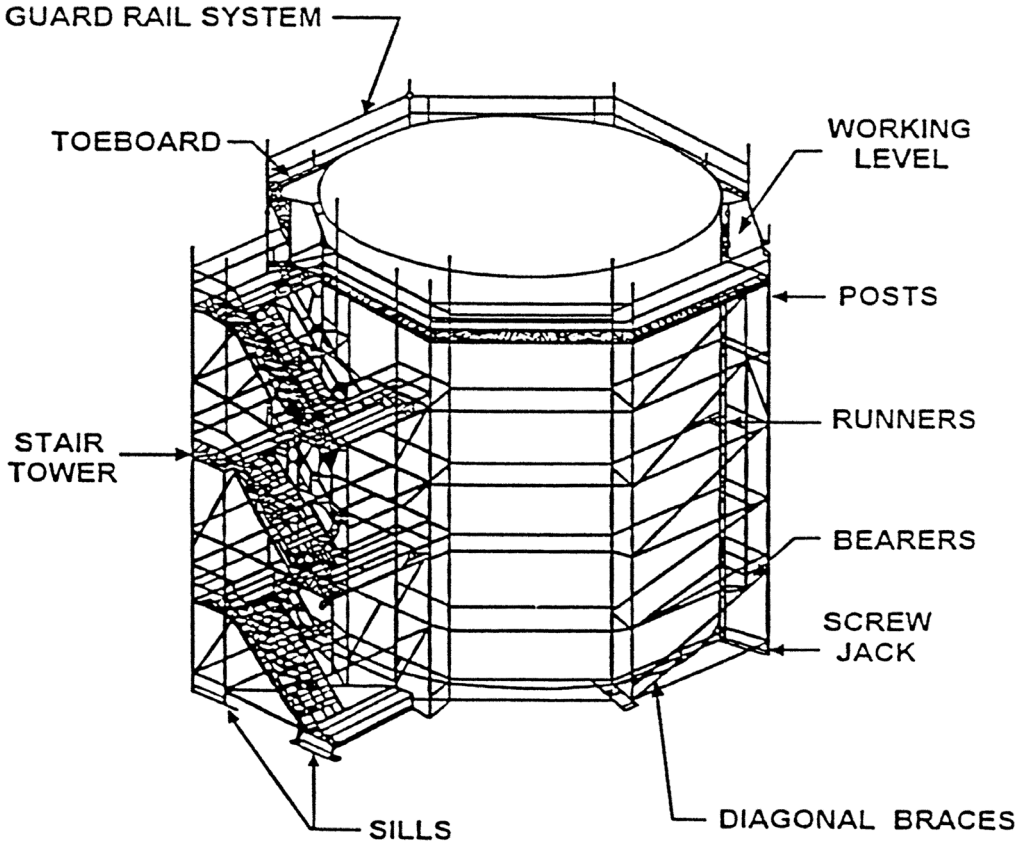

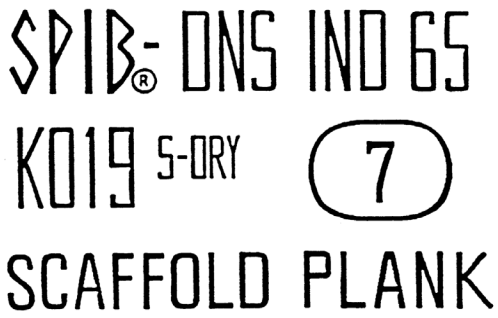

Grade stamp courtesy of Southern Pine Inspection Bureau

Grade stamp courtesy of West Coast Lumber Inspection Bureau

TUBE AND COUPLER SCAFFOLD

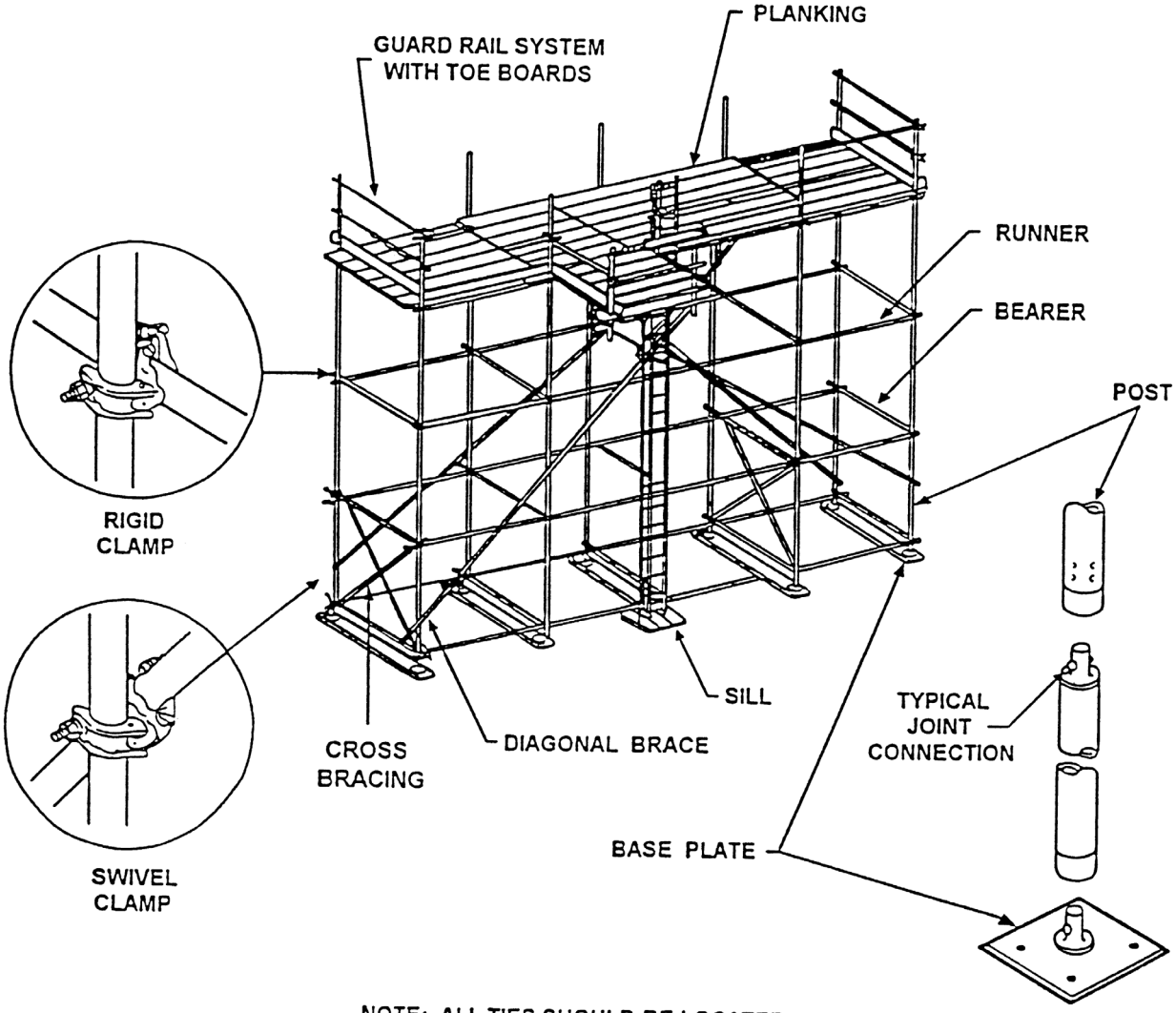

NOTE: ALL TIES SHOULD BE LOCATED AT CLAMP LOCATIONS.

SCAFFOLDING WORK SURFACES

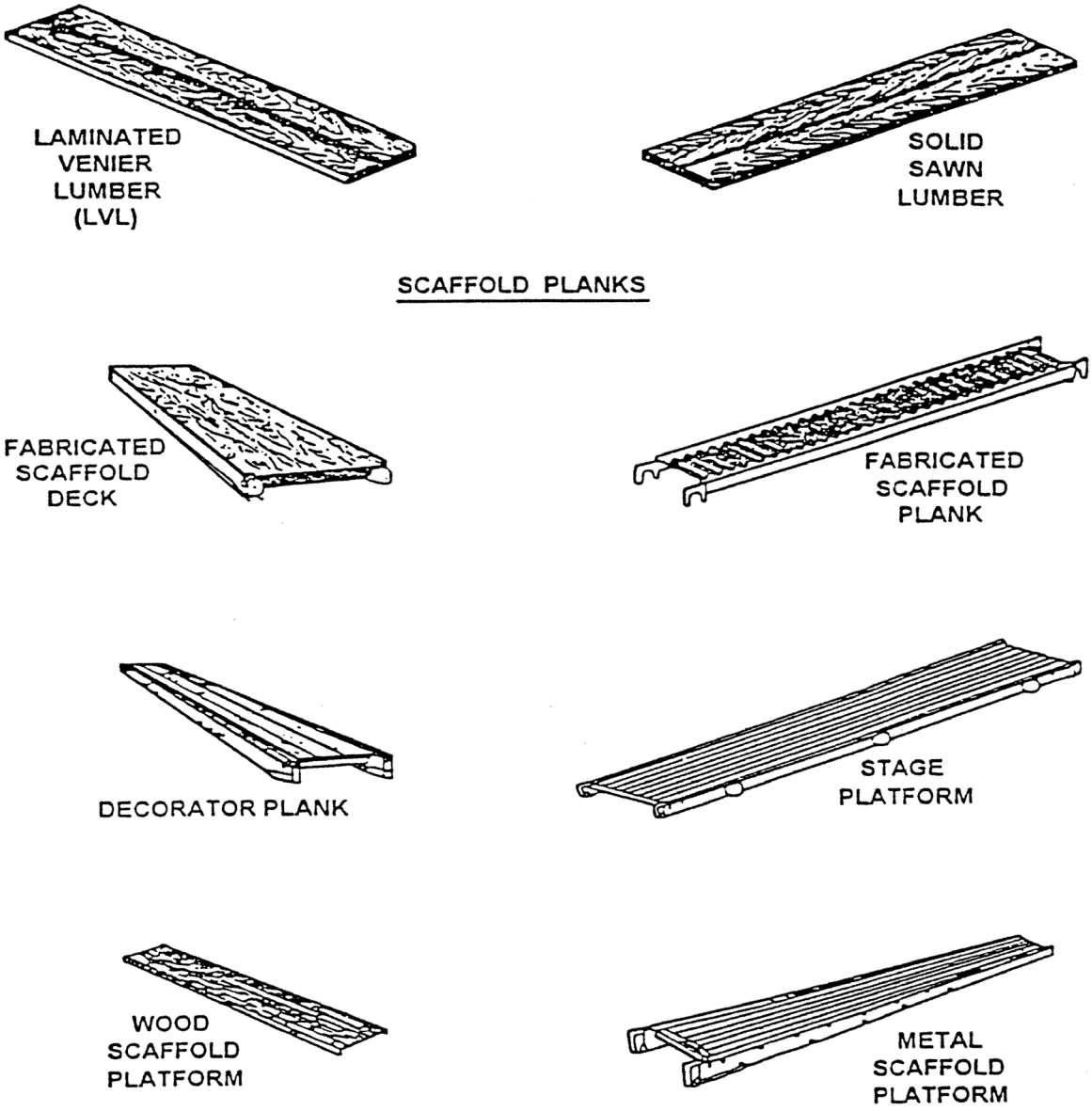

OUTRIGGER SCAFFOLD

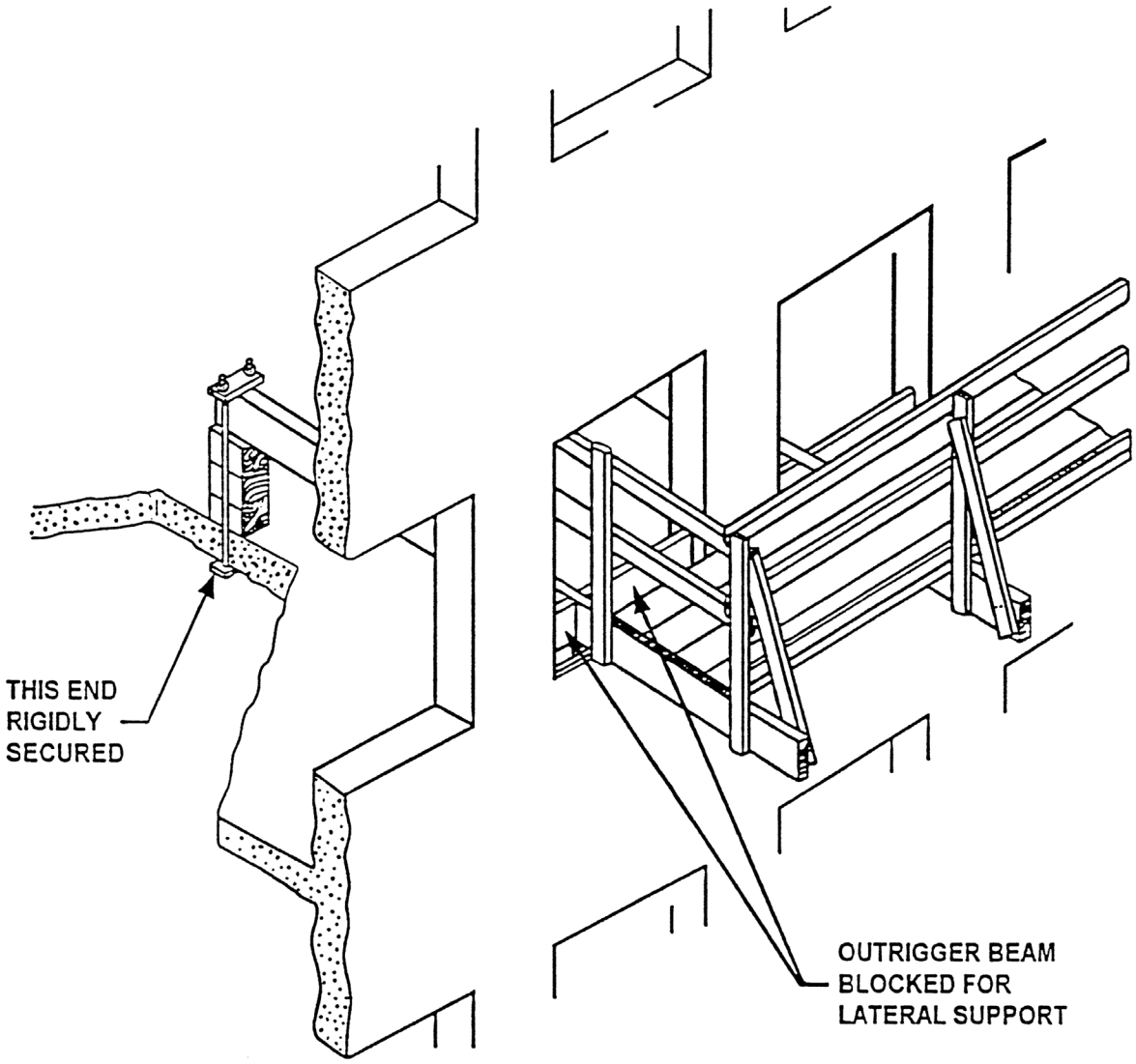

[Statutory Authority: RCW 49.17.010, [49.17].040, and [49.17].050. 00-08-078, § 296-24-862, filed 4/4/00, effective 7/1/00.]

PART J-3
POWERED PLATFORMS

Note: Powered platforms have been moved to chapters 296-869 and 296-870 WAC.

WAC 296-24-88050 Appendix C—Personal fall arrest system (Part I—Mandatory; Parts II and III—Nonmandatory). (1) Use of the Appendix.

Part I of Appendix C sets out the mandatory criteria for personal fall arrest systems used by all employees using powered platforms. Part II sets out nonmandatory test procedures which may be used to determine compliance with applicable requirements contained in Part I of this Appendix. Part III provides nonmandatory guidelines which are intended to assist employers in complying with these provisions.

PART I

Personal fall arrest systems (mandatory)—(1) Scope and application. This section establishes the application of and performance criteria for personal fall arrest systems which are required for use by all employees using powered platforms under WAC 296-24-88035.

(2) Definitions.

Anchorage means a secure point of attachment for lifelines, lanyards, or deceleration devices which is capable of withstanding the forces specified in the applicable sections of chapter 296-24 WAC, and independent of the means of supporting or suspending the employee.

Buckle means any device for holding the body harness closed around the employee's body.

Competent person means an individual knowledgeable of fall protection equipment, including the manufacturers recommendations and instructions for the proper use, inspection, and maintenance; and who is capable of identifying

existing and potential fall hazards; and who has the authority to take prompt corrective action to eliminate those hazards; and who is knowledgeable of the rules contained in this section regarding the erection, use, inspection, and maintenance of fall protection equipment and systems.

Connector means a device which is used to couple (connect) parts of the personal fall arrest system and positioning device systems together. It may be an independent component of the system, such as a carabiner, or it may be an integral component of part of the system (such as a buckle or deering sewn into a body belt or body harness, or a snap-hook spliced or sewn to a lanyard or self-retracting lanyard).

Deceleration device means any mechanism, such as a rope grab, ripstitch lanyard, specially woven lanyard, tearing or deforming lanyards, automatic self retracting-lifeline/lanyard, etc., which serves to dissipate a substantial amount of energy during a fall arrest, or otherwise limit the energy imposed on an employee during fall arrest.

Deceleration distance means the additional vertical distance a falling employee travels, excluding lifeline elongation and free fall distance, before stopping, from the point at which the deceleration device begins to operate. It is measured as the distance between the location of an employee's full body harness attachment point at the moment of activation (at the onset of fall arrest forces) of the deceleration device during a fall, and the location of that attachment point after the employee comes to a full stop.

Equivalent means alternative designs, materials or methods to protect against a hazard which the employer can demonstrate will provide an equal or greater degree of safety for employees than the methods, materials or designs specified in the standard.

Free fall means the act of falling before a personal fall arrest system begins to apply force to arrest the fall.

Free fall distance means the vertical displacement of the fall arrest attachment point on the employee's body harness between onset of the fall and just before the system begins to apply force to arrest the fall. This distance excludes deceleration distance, and lifeline lanyard elongation, but includes any deceleration device slide distance or self-retracting lifeline/lanyard extension before they operate and fall arrest forces occur.

Full body harness means a configuration of connected straps to distribute a fall arresting force over at least the thighs, shoulders and pelvis, with provisions for attaching a lanyard, lifeline, or deceleration device.

Lanyard means a flexible line of webbing, rope, or cable used to secure a body belt or harness to a lifeline or an anchorage point usually 2, 4, or 6 feet long.

Lifeline means a vertical line from a fixed anchorage or between two horizontal anchorages, independent of walking or working surfaces, to which a lanyard or device is secured. Lifeline as referred to in this text is one which is part of a fall protection system used as back-up safety for an elevated worker.

Personal fall arrest system means a system used to arrest an employee in a fall from a working level. It consists of an anchorage, connectors, body harness and may include a lanyard, deceleration device, lifeline, or suitable combinations of these.

Qualified means one who, by possession of a recognized degree, certificate, or professional standing, or who by extensive knowledge, training, and experience, has successfully demonstrated his/her ability to solve or resolve problems related to the subject matter, the work, or the project.

Rope grab means a fall arrester that is designed to move up or down a lifeline suspended from a fixed overhead or horizontal anchorage point, or lifeline, to which the belt or harness is attached. In the event of a fall, the rope grab locks onto the lifeline rope through compression to arrest the fall. The use of a rope grab device is restricted for all restraint applications.

Self-retracting lifeline/lanyard means a deceleration device which contains a drum-wound line which may be slowly extracted from, or retracted onto, the drum under slight tension during normal employee movement, and which after onset of a fall, automatically locks the drum and arrests the fall.

Snap-hook means a self-closing connecting device with a gatekeeper latch or similar arrangement that will remain closed until manually opened. This includes single action snap hooks that open when the gatekeeper is depressed and double action snap hooks that require a second action on a gatekeeper before the gate can be opened.

Tie-off means the act of an employee, wearing personal fall protection equipment, connecting directly or indirectly to an anchorage. It also means the condition of an employee being connected to an anchorage.

(3) Design for system components.

(a) Connectors must be drop forged, pressed or formed steel, or made of equivalent materials.

(b) Connectors must have a corrosion-resistant finish, and all surfaces and edges must be smooth to prevent damage to interfacing parts of the system.

(c) Lanyards and vertical lifelines which tie-off one employee must have a minimum breaking strength of 5,000 pounds (22.2 kN).

(d) Self-retracting lifelines and lanyards which automatically limit free fall distance to 2 feet (0.61 m) or less must have components capable of sustaining a minimum static tensile load of 3,000 pounds (13.3 kN) applied to the device with the lifeline or lanyard in the fully extended position.

(e) Self-retracting lifelines and lanyards which do not limit free fall distance to 2 feet (0.61 m) or less, ripstitch lanyards, and tearing and deforming lanyards must be capable of sustaining a minimum tensile load of 5,400 pounds (23.9 kN) applied to the device with the lifeline or lanyard in the fully extended position.

(f) Dee-rings and snap-hooks must be capable of sustaining a minimum tensile load of 5000 pounds (22.2 N).

(g) Dee-rings and snap-hooks must be 100 percent proof-tested to a minimum tensile load of 3600 pounds (16 kN) without cracking, breaking, or taking permanent deformation.

(h) Snap-hooks must be sized to be compatible with the member to which they are connected so as to prevent unintentional disengagement of the snap-hook by depression of the snap-hook keeper by the connected member, or must be a locking type snap-hook designed and used to prevent disengagement of the snap-hook by the contact of the snap-hook keeper by the connected member.

(i) Horizontal lifelines, where used, must be designed, and installed as part of a complete personal fall arrest system, which maintains a safety factor of at least 2, under the supervision of a qualified person.

(j) Anchorages to which personal fall arrest equipment is attached must be capable of supporting at least 5,000 pounds (22.2 kN) per employee attached, or must be designed, installed, and used as part of a complete personal fall arrest system which maintains a safety factor of at least two, under the supervision of a qualified person.

(k) Ropes and straps (webbing) used in lanyards, lifelines, and strength components of body harnesses, must be made from synthetic fibers or wire rope.

(4) System performance criteria.

(a) Personal fall arrest systems must, when stopping a fall:

(i) Limit maximum arresting force on an employee to 1,800 pounds (8 kN) when used with a body harness;

(ii) Bring an employee to a complete stop and limit maximum deceleration distance an employee travels to 3.5 feet (1.07 m); and

(iii) Must have sufficient strength to withstand twice the potential impact energy of an employee free falling a distance of 6 feet (1.8 m), or the free fall distance permitted by the system, whichever is less.

(b)(i) When used by employees having a combined person and tool weight of less than 310 pounds (140 kg), personal fall arrest systems which meet the criteria and protocols contained in subsections (2), (3), and (4) in Part II of this Appendix must be considered as complying with the provisions of (a) of this subsection.

(ii) When used by employees having a combined tool and body weight of 310 pounds (140 kg) or more, personal fall arrest systems which meet the criteria and protocols contained in subsections (2), (3), and (4) of Part II may be considered as complying with the provisions of (a) of this subsection provided that the criteria and protocols are modified appropriately to provide proper protection for such heavier weights.

(5) Care and use.

(a) Snap-hooks, unless of a locking type designed and used to prevent disengagement from the following connections, must not be engaged:

(i) Directly to webbing, rope or wire rope;

(ii) To each other;

(iii) To a dee-ring to which another snap-hook or other connector is attached;

(iv) To a horizontal lifeline; or

(v) To any object which is incompatibly shaped or dimensioned in relation to the snap-hook such that the connected object could depress the snap-hook keeper a sufficient amount to release itself.

(b) Devices used to connect to a horizontal lifeline which may become a vertical lifeline must be capable of locking in either direction on the lifeline.

(c) Personal fall arrest systems must be rigged such that an employee can neither free fall more than 6 feet (1.8 m), nor contact any lower level.

(d) The attachment point of the body harness must be located in the center of the wearer's back near shoulder level, or above the wearer's head.

(e) When vertical lifelines are used, each employee must be provided with a separate lifeline.

(f) Personal fall arrest systems or components must be used only for employee fall protection.

(g) Personal fall arrest systems or components subjected to impact loading must be immediately removed from service and must not be used again for employee protection unless inspected and determined by a competent person to be undamaged and suitable for reuse.

(h) The employer must provide for prompt rescue of employees in the event of a fall or must assure the self-rescue capability of employees.

(i) Before using a personal fall arrest system, and after any component or system is changed, employees must be trained in accordance with the requirements of WAC 296-24-88030(1), in the safe use of the system.

(6) Inspections. Personal fall arrest systems must be inspected prior to each use for mildew, wear, damage and other deterioration, and defective components must be removed from service if their strength or function may be adversely affected.

PART II
Test methods for personal fall arrest systems
(nonmandatory)

(1) General. Subsections (2), (3), (4) and (5) of this Part II set forth test procedures which may be used to determine compliance with the requirements in subsection (4) of Part I of this Appendix.

(2) General conditions for all tests in Part II.

(a) Lifelines, lanyards and deceleration devices should be attached to an anchorage and connected to the body harness in the same manner as they would be when used to protect employees.

(b) The anchorage should be rigid, and should not have a deflection greater than .04 inches (1 mm) when a force of 2,250 pounds (10 kN) is applied.

(c) The frequency response of the load measuring instrumentation should be 120 Hz.

(d) The test weight used in the strength and force tests should be a rigid, metal, cylindrical or torso-shaped object with a girth of 38 inches plus or minus 4 inches (96 cm plus or minus 10 cm).

(e) The lanyard or lifeline used to create the free fall distance should be supplied with the system, or in its absence, the least elastic lanyard or lifeline available to be used with the system.

(f) The test weight for each test should be hoisted to the required level and should be quickly released without having any appreciable motion imparted to it.

(g) The system's performance should be evaluated taking into account the range of environmental conditions for which it is designed to be used.

(h) Following the test, the system need not be capable of further operation.

(3) Strength test.

(a) During the testing of all systems, a test weight of 300 pounds plus or minus 5 pounds (135 kg plus or minus 2.5 kg) should be used. (See subsection (2)(d) of this part.)

(b) The test consists of dropping the test weight once. A new unused system should be used for each test.

(c) For lanyard systems, the lanyard length should be 6 feet plus or minus 2 inches (1.83 m plus or minus 5 cm) as measured from the fixed anchorage to the attachment on the body belt or body harness.

(d) For rope-grab-type deceleration systems, the length of the lifeline above the centerline of the grabbing mechanism to the lifeline's anchorage point should not exceed 2 feet (0.61 m).

(e) For lanyard systems, for systems with deceleration devices which do not automatically limit free fall distance to 2 feet (0.61 m) or less, and for systems with deceleration devices which have a connection distance in excess of one foot (0.3 m) (measured between the centerline of the lifeline and the attachment point to the body harness), the test weight should be rigged to free fall a distance of 7.5 feet (2.3 m) from a point that is 1.5 feet (46 cm) above the anchorage point, to its hanging location (6 feet below the anchorage). The test weight should fall without interference, obstruction, or hitting the floor or ground during the test. In some cases a nonelastic wire lanyard of sufficient length may need to be added to the system (for test purposes) to create the necessary free fall distance.

(f) For deceleration device systems with integral lifelines or lanyards which automatically limit free fall distance to 2 feet (0.61 m) or less, the test weight should be rigged to free fall a distance of 4 feet (1.22 m).

(g) Any weight which detaches from the harness should constitute failure for the strength test.

(4) Force test.

(a) General. The test consists of dropping the respective test weight specified in (b)(i) or (c)(i) of this subsection once. A new, unused system should be used for each test.

(b) For lanyard systems.

(i) A test weight of 220 pounds plus or minus three pounds (100 kg plus or minus 1.6 kg) should be used. (See subsection (2)(d) above.)

(ii) Lanyard length should be 6 feet plus or minus 2 inches (1.83 m plus or minus 5 cm) as measured from the fixed anchorage to the attachment on the body harness.

(iii) The test weight should fall free from the anchorage level to its hanging location (a total of 6 feet (1.83 m) free fall distance) without interference, obstruction, or hitting the floor or ground during the test.

(c) For all other systems.

(i) A test weight of 220 pounds plus or minus 3 pounds (100 kg plus or minus 1.6 kg) should be used. (See subsection (2)(d) above.)

(ii) The free fall distance to be used in the test should be the maximum fall distance physically permitted by the system during normal use conditions, up to a maximum free fall distance for the test weight of 6 feet (1.83 m), except as follows:

(A) For deceleration systems which have a connection link or lanyard, the test weight should free fall a distance equal to the connection distance (measured between the centerline of the lifeline and the attachment point to the body harness).

(B) For deceleration device systems with integral lifelines or lanyards which automatically limit free fall distance to 2 feet (0.61 m) or less, the test weight should free fall a distance equal to that permitted by the system in normal use. (For example, to test a system with a self-retracting lifeline or lanyard, the test weight should be supported and the system allowed to retract the lifeline or lanyard as it would in normal use. The test weight would then be released and the force and deceleration distance measured).

(d) A system fails the force test if the recorded maximum arresting force exceeds 2,520 pounds (11.2 kN) when using a body harness.

(e) The maximum elongation and deceleration distance should be recorded during the force test.

(5) Deceleration device tests.

(a) General. The device should be evaluated or tested under the environmental conditions, (such as rain, ice, grease, dirt, type of lifeline, etc.), for which the device is designed.

(b) Rope-grab-type deceleration devices.

(i) Devices should be moved on a lifeline 1,000 times over the same length of line a distance of not less than one foot (30.5 cm), and the mechanism should lock each time.

(ii) Unless the device is permanently marked to indicate the type(s) of lifeline which must be used, several types (different diameters and different materials), of lifelines should be used to test the device.

(c) Other self-activating-type deceleration devices. The locking mechanisms of other self-activating-type deceleration devices designed for more than one arrest should lock each of 1,000 times as they would in normal service.

PART III

Additional nonmandatory guidelines for personal fall arrest systems. The following information constitutes additional guidelines for use in complying with requirements for a personal fall arrest system.

(1) Selection and use considerations. The kind of personal fall arrest system selected should match the particular work situation, and any possible free fall distance should be kept to a minimum. Consideration should be given to the particular work environment. For example, the presence of acids, dirt, moisture, oil, grease, etc., and their effect on the system, should be evaluated. Hot or cold environments may also have an adverse affect on the system. Wire rope should not be used where an electrical hazard is anticipated. As required by the standard, the employer must plan to have means available to promptly rescue an employee should a fall occur, since the suspended employee may not be able to reach a work level independently.

Where lanyards, connectors, and lifelines are subject to damage by work operations such as welding, chemical cleaning, and sandblasting, the component should be protected, or other securing systems should be used. The employer should fully evaluate the work conditions and environment (including seasonal weather changes) before selecting the appropriate personal fall protection system. Once in use, the system's effectiveness should be monitored. In some cases, a program for cleaning and maintenance of the system may be necessary.

(2) Testing considerations. Before purchasing or putting into use a personal fall arrest system, an employer should obtain from the supplier information about the system based

on its performance during testing so that the employer can know if the system meets this standard. Testing should be done using recognized test methods. Part II of this Appendix C contains test methods recognized for evaluating the performance of fall arrest systems. Not all systems may need to be individually tested; the performance of some systems may be based on data and calculations derived from testing of similar systems, provided that enough information is available to demonstrate similarity of function and design.

(3) Component compatibility considerations. Ideally, a personal fall arrest system is designed, tested, and supplied as a complete system. However, it is common practice for lanyards, connectors, lifelines, deceleration devices, and body harnesses to be interchanged since some components wear out before others. The employer and employee should realize that not all components are interchangeable. For instance, a lanyard should not be connected between a body harness and a deceleration device of the self-retracting type since this can result in additional free fall for which the system was not designed. Any substitution or change to a personal fall arrest system should be fully evaluated or tested by a competent person to determine that it meets the standard, before the modified system is put in use.

(4) Employee training considerations. Thorough employee training in the selection and use of personal fall arrest systems is imperative. As stated in the standard, before the equipment is used, employees must be trained in the safe use of the system. This should include the following: Application limits; proper anchoring and tie-off techniques; estimation of free fall distance, including determination of deceleration distance, and total fall distance to prevent striking a lower level; methods of use; and inspection and storage of the system. Careless or improper use of the equipment can result in serious injury or death. Employers and employees should become familiar with the material in this Appendix, as well as manufacturer's recommendations, before a system is used. Of uppermost importance is the reduction in strength caused by certain tie-offs (such as using knots, tying around sharp edges, etc.) and maximum permitted free fall distance. Also, to be stressed are the importance of inspections prior to use, the limitations of the equipment, and unique conditions at the worksite which may be important in determining the type of system to use.

(5) Instruction considerations. Employers should obtain comprehensive instructions from the supplier as to the system's proper use and application, including, where applicable:

(a) The force measured during the sample force test;

(b) The maximum elongation measured for lanyards during the force test;

(c) The deceleration distance measured for deceleration devices during the force test;

(d) Caution statements on critical use limitations;

(e) Application limits;

(f) Proper hook-up, anchoring and tie-off techniques, including the proper dee-ring or other attachment point to use on the body harness for fall arrest;

(g) Proper climbing techniques;

(h) Methods of inspection, use, cleaning, and storage; and

(i) Specific lifelines which may be used. This information should be provided to employees during training.

(6) Inspection considerations. As stated in WAC 296-24-88050(6), personal fall arrest systems must be regularly inspected. Any component with any significant defect, such as cuts, tears, abrasions, mold, or undue stretching; alterations or additions which might affect its efficiency; damage due to deterioration; contact with fire, acids, or other corrosives; distorted hooks or faulty hook springs; tongues unfitted to the shoulder of buckles; loose or damaged mountings; nonfunctioning parts; or wearing or internal deterioration in the ropes must be withdrawn from service immediately, and should be tagged or marked as unusable, or destroyed.

(7) Rescue considerations. As required by WAC 296-24-88050 (5)(h) when personal fall arrest systems are used, the employer must assure that employees can be promptly rescued or can rescue themselves should a fall occur. The availability of rescue personnel, ladders or other rescue equipment should be evaluated. In some situations, equipment which allows employees to rescue themselves after the fall has been arrested may be desirable, such as devices which have descent capability.

(8) Tie-off considerations.

(a) One of the most important aspects of personal fall protection systems is fully planning the system before it is put into use. Probably the most overlooked component is planning for suitable anchorage points. Such planning should ideally be done before the structure or building is constructed so that anchorage points can be incorporated during construction for use later for window cleaning or other building maintenance. If properly planned, these anchorage points may be used during construction, as well as afterwards.

(b) Employers and employees should at all times be aware that the strength of a personal fall arrest system is based on its being attached to an anchoring system which does not significantly reduce the strength of the system (such as a properly dimensioned eye-bolt/snap-hook anchorage). Therefore, if a means of attachment is used that will reduce the strength of the system, that component should be replaced by a stronger one, but one that will also maintain the appropriate maximum arrest force characteristics.

(c) Tie-off using a knot in a rope lanyard or lifeline (at any location) can reduce the lifeline or lanyard strength by 50 percent or more. Therefore, a stronger lanyard or lifeline should be used to compensate for the weakening effect of the knot, or the lanyard length should be reduced (or the tie-off location raised) to minimize free fall distance, or the lanyard or lifeline should be replaced by one which has an appropriately incorporated connector to eliminate the need for a knot.

(d) Tie-off of a rope lanyard or lifeline around an "H" or "I" beam or similar support can reduce its strength as much as 70 percent due to the cutting action of the beam edges. Therefore, use should be made of a webbing lanyard or wire core lifeline around the beam; or the lanyard or lifeline should be protected from the edge; or free fall distance should be greatly minimized.

(e) Tie-off where the line passes over or around rough or sharp surfaces reduces strength drastically. Such a tie-off should be avoided or an alternative tie-off rigging should be used. Such alternatives may include use of a snap-hook/dee-ring connection, wire rope tie-off, an effective padding of the

surfaces, or an abrasion-resistance strap around or over the problem surface.

(f) Horizontal lifelines may, depending on their geometry and angle of sag, be subjected to greater loads than the impact load imposed by an attached component. When the angle of horizontal lifeline sag is less than 30 degrees, the impact force imparted to the lifeline by an attached lanyard is greatly amplified. For example, with a sag angle of 15 degrees, the force amplification is about 2:1 and at 5 degrees sag, it is about 6:1. Depending on the angle of sag, and the line's elasticity, the strength of the horizontal lifeline and the anchorages to which it is attached should be increased a number of times over that of the lanyard. Extreme care should be taken in considering a horizontal lifeline for multiple tie-offs. The reason for this is that in multiple tie-offs to a horizontal lifeline, if one employee falls, the movement of the falling employee and the horizontal lifeline during arrest of the fall may cause other employees to also fall. Horizontal lifeline and anchorage strength should be increased for each additional employee to be tied-off. For these and other reasons, the design of systems using horizontal lifelines must only be done by qualified persons. Testing of installed lifelines and anchors prior to use is recommended.

(g) The strength of an eye-bolt is rated along the axis of the bolt and its strength is greatly reduced if the force is applied at an angle to this axis (in the direction of shear). Also, care should be exercised in selecting the proper diameter of the eye to avoid accidental disengagement of snap-hooks not designed to be compatible for the connection.

(h) Due to the significant reduction in the strength of the lifeline/lanyard (in some cases, as much as a 70 percent reduction), the sliding hitch knot should not be used for lifeline/lanyard connections except in emergency situations where no other available system is practical. The "one-and-one" sliding hitch knot should never be used because it is unreliable in stopping a fall. The "two-and-two," or "three-and-three" knot (preferable), may be used in emergency situations; however, care should be taken to limit free fall distance to a minimum because of reduced lifeline/lanyard strength.

(9) Vertical lifeline considerations. As required by the standard, each employee must have a separate lifeline when the lifeline is vertical. The reason for this is that in multiple tie-offs to a single lifeline, if one employee falls, the movement of the lifeline during the arrest of the fall may pull other employees' lanyards, causing them to fall as well.

(10) Snap-hook considerations.

(a) Required by this standard for all connections, locking snap-hooks incorporate a positive locking mechanism in addition to the spring loaded keeper, which will not allow the keeper to open under moderate pressure without someone first releasing the mechanism. Such a feature, properly designed, effectively prevents roll-out from occurring.

(b) As required by the standard WAC 296-24-88050 (5)(a) the following connections must be avoided (unless properly designed locking snap-hooks are used) because they are conditions which can result in roll-out when a nonlocking snap-hook is used:

• Direct connection of a snap-hook to a horizontal lifeline.

• Two (or more) snap-hooks connected to one dee-ring.

• Two snap-hooks connected to each other.

• A snap-hook connected back on its integral lanyard.

• A snap-hook connected to a webbing loop or webbing lanyard.

• Improper dimensions of the dee-ring, rebar, or other connection point in relation to the snap-hook dimensions which would allow the snap-hook keeper to be depressed by a turning motion of the snap-hook.

(11) Free fall considerations. The employer and employee should at all times be aware that a system's maximum arresting force is evaluated under normal use conditions established by the manufacturer, and in no case using a free fall distance in excess of 6 feet (1.8 m). A few extra feet of free fall can significantly increase the arresting force on the employee, possibly to the point of causing injury. Because of this, the free fall distance should be kept at a minimum, and, as required by the standard, in no case greater than 6 feet (1.8 m). To help assure this, the tie-off attachment point to the lifeline or anchor should be located at or above the connection point of the fall arrest equipment to harness. (Since otherwise additional free fall distance is added to the length of the connecting means (i.e. lanyard).) Attaching to the working surface will often result in a free fall greater than 6 feet (1.8 m). For instance, if a 6 foot (1.8 m) lanyard is used, the total free fall distance will be the distance from the working level to the body harness attachment point plus the 6 feet (1.8 m) of lanyard length. Another important consideration is that the arresting force which the fall system must withstand also goes up with greater distances of free fall, possibly exceeding the strength of the system.

(12) Elongation and deceleration distance considerations. Other factors involved in a proper tie-off are elongation and deceleration distance. During the arresting of a fall, a lanyard will experience a length of stretching or elongation, whereas activation of a deceleration device will result in a certain stopping distance. These distances should be available with the lanyard or device's instructions and must be added to the free fall distance to arrive at the total fall distance before an employee is fully stopped. The additional stopping distance may be very significant if the lanyard or deceleration device is attached near or at the end of a long lifeline, which may itself add considerable distance due to its own elongation. As required by the standard, sufficient distance to allow for all of these factors must also be maintained between the employee and obstructions below, to prevent an injury due to impact before the system fully arrests the fall. In addition, a minimum of 12 feet (3.7 m) of lifeline should be allowed below the securing point of a rope grab type deceleration device, and the end terminated to prevent the device from sliding off the lifeline. Alternatively, the lifeline should extend to the ground or the next working level below. These measures are suggested to prevent the worker from inadvertently moving past the end of the lifeline and having the rope grab become disengaged from the lifeline.

(13) Obstruction considerations. The location of the tie-off should also consider the hazard of obstructions in the potential fall path of the employee. Tie-offs which minimize the possibilities of exaggerated swinging should be considered.

(14) Other considerations. Because of the design of some personal fall arrest systems, additional considerations may be

required for proper tie-off. For example, heavy deceleration devices of the self-retracting type should be secured overhead in order to avoid the weight of the device having to be supported by the employee. Also, if self-retracting equipment is connected to a horizontal lifeline, the sag in the lifeline should be minimized to prevent the device from sliding down the lifeline to a position which creates a swing hazard during fall arrest. In all cases, manufacturer's instructions should be followed.

[Statutory Authority: RCW 49.17.010, [49.17].040, and [49.17].050. 00-08-078, § 296-24-88050, filed 4/4/00, effective 7/1/00.]

PART K
COMPRESSED GAS AND COMPRESSED GAS EQUIPMENT

WAC 296-24-920 Inspection of compressed gas cylinders.

[Order 73-5, § 296-24-920, filed 5/9/73 and Order 73-4, § 296-24-920, filed 5/7/73.]

WAC 296-24-92001 Definitions. (1) High- and low-pressure cylinders. High-pressure cylinders means those cylinders with a marked service pressure of 900 p.s.i. or greater; low-pressure cylinders are those with a marked service pressure less than 900 p.s.i.

(2) Minimum allowable wall thickness. The minimum allowable wall thickness means the minimum wall thickness required by the specification under which the cylinder was manufactured.

(3) Dents. Dents (in cylinders) means deformations caused by the cylinder coming in contact with a blunt object in such a way that the thickness of metal is not materially impaired.

(4) Cuts, gouges, or digs. Cuts, gouges, or digs (in cylinders) means deformations caused by contact with a sharp object in such a way as to cut into or upset the metal of the cylinder, decreasing the wall thickness at that point.

(5) Corrosion or pitting. Means corrosion or pitting in cylinders involving the loss of wall thickness by corrosive media.

Note: There are several kinds of pitting or corrosion to be considered.

(6) Isolated pitting. Means isolated pits of small cross-section which do not effectively weaken the cylinder wall but are indicative of possible complete penetration and leakage.

Note: Since the pitting is isolated the original wall is essentially intact.

(7) Line corrosion. Means pits which are not isolated but are connected or nearly connected to others in a narrow band or line.

Note: This condition is more serious than isolated pitting. Line corrosion frequently occurs in the area of intersection of the footring and bottom of a cylinder. This is sometimes referred to as "crevice corrosion."

(8) General corrosion. Means corrosion which covers considerable surface areas of the cylinder.

Note: It reduces the structural strength. It is often difficult to measure or estimate the depth of general corrosion because direct comparison with the original wall cannot always be made. General corrosion is often accompanied by pitting.

(9) "DOT" means the U.S. Department of Transportation.

[Order 73-5, § 296-24-92001, filed 5/9/73 and Order 73-4, § 296-24-92001, filed 5/7/73.]

WAC 296-24-92003 General requirements. (1) Application.

(a) Each employer shall determine that compressed gas cylinders under the employers control are in a safe condition to the extent that this can be determined by visual, and other inspection required by WAC 296-24-920 through 296-24-92011.

(b) The requirements contained in these standards are not intended to apply to cylinders manufactured under specification DOT (ICC)-3HT (49 CFR Ch.1). Separate requirements covering service life and standards for visual inspection of these cylinders are contained in Compressed Gas Association Pamphlet C-8, "Standard for Requalification of ICC-3HT Cylinders."

(2) Quality of inspection. Experience in the inspection of cylinders is an important factor in determining the acceptability of a given cylinder for continued service.

Note: Users lacking this experience and having doubtful cylinders should return them to a manufacturer of the same type of cylinders for reinspection.

[Statutory Authority: Chapter 49.17 RCW. 94-15-096 (Order 94-07), § 296-24-92003, filed 7/20/94, effective 9/20/94; Order 73-5, § 296-24-92003, filed 5/9/73 and Order 73-4, § 296-24-92003, filed 5/7/73.]

WAC 296-24-92005 Inspection of low-pressure cylinders exempt from the hydrostatic test including acetylene cylinders. (1) Application. This section covers cylinders of the type that are exempt from the hydrostatic retest requirements of the DOT by virtue of their exclusive use in certain noncorrosive gas service. They are not subject to internal corrosion and do not require internal shell inspection.

(2) Preparation for inspection. Rust, scale, caked paint, etc., shall be removed from the exterior surface so that the surface can be adequately observed. Facilities shall be provided for inverting the cylinder to facilitate inspection of the bottom. This is important because experience has shown this area to be the most susceptible to corrosion.

(3) Exterior inspection. Cylinders shall be checked as outlined below for corrosion, general distortion, or any other defect that might indicate a weakness which would render it unfit for service.

(a) To fix corrosion limits for all types, designs, and sizes of cylinders, and include them in this section is not practicable. Cylinders categorized by this section and subsection (1) of this section shall meet the following requirements. Failure to meet any of these requirements is of itself cause for rejection of a cylinder. Rejected cylinders shall be removed from the work place. Rejected cylinders may be returned to the manufacturer for reinspection.

(i) A cylinder shall be rejected when the tare weight is less than ninety-five percent of the original tare weight marked on the cylinder. When determining tare weight, be sure that the cylinder is empty.

(ii) A cylinder shall be rejected when the remaining wall in an area having isolated pitting only is less than one-third of the minimum allowable wall thickness as determined under (b) and (d) of this subsection.

(iii) A cylinder shall be rejected when line corrosion on the cylinder is three inches in length or over and the remaining wall is less than three-fourths of the minimum allowable wall thickness or when line corrosion is less than three inches in length and the remaining wall thickness is less than one-half the minimum allowable wall thickness as determined under (b) through (d) of this subsection.

(iv) A cylinder shall be rejected when the remaining wall in an area of general corrosion is less than one-half of the minimum allowable wall thickness as determined under (b) through (d) of this subsection.

(b) To use the criteria in (a) of this subsection, it is necessary to know the original wall thickness of the cylinder or the minimum allowable wall thickness. Table M-1 lists the minimum allowable wall thickness under DOT specifications (49 CFR Ch. 1) for a number of common size low-pressure cylinders.

TABLE M - 1

Cylinder size O.D. x length (inches)	DOT Specification marking	Nominal water capacity (pounds)	Minimum allowable wall thickness (inches)
15 x 46	4B240[1]	239	0.128
14 13/16 x 47	4E240	239	.140
14 15/16 x 46	4BA240	239	.086
14 11/16 x 28 3/8	4BA240	143	.086
11 29/32 x 32 11/16	4BA240	95	.078
11 29/32 x 18 11/32	4BA240	48	.078

[1]Without longitudinal seam.

(c) When the wall thickness of the cylinder at manufacture is not known, and the actual wall thickness cannot be measured, this cylinder shall be rejected when the inspection reveals that the deepest pit in a general corrosion area exceeds three sixty-fourths inch. This is arrived at by considering that in no case shall the pitting exceed one-half the minimum allowable wall thickness which is 0.064 inch. When a pit measures 0.043 inch (approximately three sixty-fourths inch) in a corrosion area, general corrosion will already have removed 0.021 inch of the original wall and the total pit depth as compared to the initial wall will be 0.064 inch.

(d) When the original wall thickness at manufacture is known, or the actual wall thickness is measured, this thickness less one and one-half times the maximum measured pit depth shall be 0.064 inch or greater. If it is less, the cylinder shall be rejected.

(e) Dents are of concern where the metal deformation is sharp and confined, or where they are near a weld. Where metal deformation is not sharp, dents of larger magnitude can be tolerated.

(f) Where denting occurs so that any part of the deformation includes a weld, the maximum allowable dent depth shall be one-fourth inch.

(g) When denting occurs so that no part of the deformation includes a weld, the cylinder shall be rejected if the depth of the dent is greater than one-tenth of the mean diameter of the dent.

(h) Cuts, gouges, or digs reduce the wall thickness of the cylinder and in addition are considered to be stress raisers. Depth limits are set in these standards; however, cylinders shall be rejected at one-half of the limit set whenever the length of the defect is three inches or more.

(i) When the original wall thickness at manufacture is not known, and the actual wall thickness cannot be measured a cylinder shall be rejected if the cut, gouge, or dig exceeds one-half of the minimum allowable wall thickness as determined under (b) through (d) of this subsection.

(ii) When the original wall thickness at manufacture is known, or the actual wall thickness is measured, a cylinder shall be rejected if the original wall thickness minus the depth of the defect is less than one-half of the minimum allowable wall thickness as determined under (b) through (d) of this subsection.

(i) Leaks can originate from a number of sources, such as defects in a welded or brazed seam, defects at the threaded opening, or from sharp dents, digs, gouges, or pits.

(i) To check for leaks, the cylinder shall be charged and carefully examined. All seams and pressure openings shall be coated with a soap or other suitable solution to detect the escape of gas. Any leakage is cause for rejection.

(ii) Safety relief devices as defined in WAC 296-24-93001(1) shall be tested for leaks before a charged cylinder is shipped from the cylinder filling plant.

(j) After fire damage, cylinders shall be carefully inspected for evidence of exposure to fire.

(i) Common evidences of exposure to fire are:

(A) Charring or burning of the paint or other protective coat.

(B) Burning or sintering of the metal.

(C) Distortion of the cylinder.

(D) Melted out fuse plugs.

(E) Burning or melting of valve.

(ii) The evaluation of fire damage by DOT regulations state that, "a cylinder which has been subjected to the action of fire must not again be placed in service until it has been properly reconditioned," in accordance with 49 CFR 173.34(f). The general intent of this requirement is to remove from service cylinders which have been subject to the action of fire which has changed the metallurgical structure or the strength properties of the steel, or in the case of acetylene cylinders caused breakdown of porous filler. This is normally determined by visual examination as covered above with particular emphasis to the condition of the protective coating. If the protective coating has been burnt off or if the cylinder body is burnt, warped, or distorted, it is assumed that the cylinder has been overheated and 49 CFR 173.34(f) shall be complied with. If, however, the protective coating is only dirtied from smoke or other debris, and is found by examination to be intact underneath, the cylinder shall not be considered affected within the scope of this requirement.

(k) Cylinders are manufactured with a reasonably symmetrical shape. Cylinders which have definite visible bulges shall be removed from service and evaluated. Cylinders shall be rejected when a variation of one percent or more is found in the measured circumferences or in peripheral distances measured from the valve spud to the center seam (of equivalent fixed point).

(l) Cylinder necks shall be examined for serious cracks, folds, and flaws. Neck cracks are normally detected by testing the neck during charging operations with a soap solution.

(m) Cylinder neck threads shall be examined whenever the valve is removed from the cylinder. Cylinders shall be rejected if the required number of effective threads are materially reduced, or if a gas tight seal cannot be obtained by reasonable valving methods. Gages shall be used to measure the number of effective threads.

(n) If the valve is noticeably tilted the cylinder shall be rejected.

(o) The footring and headring of cylinders may become so distorted through service abuse that they no longer perform their functions:

(i) To cause the cylinder to remain stable and upright.

(ii) To protect the valve. Rings shall be examined for distortion; for looseness, and for failure of welds. Appearances may often warrant rejection of the cylinder.

[Statutory Authority: Chapter 49.17 RCW. 89-11-035 (Order 89-03), § 296-24-92005, filed 5/15/89, effective 6/30/89; Order 73-5, § 296-24-92005, filed 5/9/73 and Order 73-4, § 296-24-92005, filed 5/7/73.]

WAC 296-24-92007 Low-pressure cylinders subject to hydrostatic testing. (1) Application. Cylinders covered in this section are low-pressure cylinders other than those covered in WAC 296-24-92005 through 296-24-92005 (3)(o)(ii). They differ essentially from such cylinders in that they require a periodic hydrostatic retest which includes an internal and external examination. Defect limits for the external examination are prescribed in WAC 296-24-92005 through 296-24-92005 (3)(o)(ii), with exceptions for aluminum cylinders shown in WAC 296-24-92007(4).

(2) Preparation for inspection. Flammable gas cylinders shall be purged before being examined with a light. Lamps used for flammable gas cylinder inspection shall be explosion proof.

(3) Internal inspection. Cylinders shall be inspected internally at least every time the cylinder is periodically retested. The examination shall be made with a light of sufficient intensity to clearly illuminate the interior walls.

(4) External inspection of aluminum cylinders. The inspection requirements of WAC 296-24-92005 through 296-24-92005 (3)(o)(ii) shall be met, except as follows:

(a) Aluminum cylinders shall be rejected when impairment to the surface (corrosion or mechanical defect) exceeds a depth where the remaining wall is less than three-fourths of the minimum allowable wall thickness required by the specification under which the cylinder was manufactured.

(b) Aluminum cylinders subjected to the action of fire shall be removed from service.

[Order 73-5, § 296-24-92007, filed 5/9/73 and Order 73-4, § 296-24-92007, filed 5/7/73.]

WAC 296-24-92009 High-pressure cylinders. (1) Application. High-pressure cylinders are those with a marked service pressure of 900 p.s.i. or higher. They are seamless; no welding is permitted. The great bulk of such cylinders are of the 3A or 3AA types under DOT specifications (49 CFR Ch. 1).

(2) Preparation for inspection.

(a) Cylinders shall be cleaned for inspection so that the inside and outside surfaces and all conditions can be observed. This shall include removal of scale and caked paint from the exterior and the thorough removal of internal scale. Cylinders with interior coating shall be examined for defects in the coating. If the coating is defective, it shall be removed.

(b) A good inspection light of sufficient intensity to clearly illuminate the interior wall is mandatory for internal inspection. Flammable gas cylinders shall be purged before being examined with a light. Lamps for flammable gas cylinder inspection shall be explosion proof.

(3) Exterior inspection.

(a) To fix corrosion limits for all types, designs, and sizes of cylinders, and include them in this section, is not practicable. Considerable judgment is required in evaluating cylinders fit for service. Experience is a major factor, aside from strength considerations for high pressure cylinders.

(b) When the original wall thickness of the cylinder is not known, and the actual wall thickness cannot be measured, the cylinder shall be rejected if corrosion exceeds one thirty-second inch in depth. This is arrived at by subtracting from the minimum allowable wall at manufacture (0.221 inch), the limiting wall in service (0.195 inch), to give the maximum allowable corrosion limit of 0.026 inch, the equivalent of one thirty-second inch.

(c) When the wall thickness is known, or the actual wall thickness is measured, the difference between this known wall and the limiting value establishes the maximum corrosion figure. The normal hot forged cylinder of this size will have a measured wall of about 0.250 inch. Comparison of this with the limiting wall thickness shows that defects up to about one-sixteenth inch are allowable provided, of course, that the actual wall is measured or is known.

(d) Cylinders with general corrosion are evaluated by subjecting them to a hydrostatic test. Thus, a cylinder with an elastic expansion of 227 cc. or greater shall be rejected. If areas of pronounced pitting are included within the general corrosion, the depth of such pitting should also be measured (with the high spots of the actual surface as a reference plane) and the criteria established in the first example apply. Thus, the maximum corrosion limit would be one thirty-second inch when the wall was not known.

(e) Any defect of appreciable depth having a sharp bottom is a stress raiser and even though a cylinder may be acceptable from a stress standpoint, it is common practice to remove such defects. After any such repair operation, verification of the cylinder strength and structure shall be made by a hydrostatic test of other suitable means.

(f) Dents can be tolerated when the cylinder wall is not deformed excessively or abruptly. Generally speaking, dents are accepted up to a depth of about one-sixteenth inch when the major diameter of the dent is equal to or greater than 32 times the depth of the dent. Sharper dents than this are considered too abrupt and shall require rejection of the cylinder. On small diameter cylinders these general rules may have to be adjusted. Considerations of appearance play a major factor in the evaluation of dents.

(g) Cylinders with arc or torch burns shall be removed from service. Defects of this nature may be recognized by one of the following conditions:

(i) Removal of metal by scarfing or cratering.

(ii) A sentering or burning of the base metal.

(iii) A hardened heat affected zone. A simple method for verifying the presence of small arc burns is to file the suspected area. The hardened zone will resist filing as compared to the softer base metal.

(h) Cylinders are normally produced with a symmetrical shape. Cylinders with distinct visual bulges shall be removed from service until the nature of the defect is determined. Some cylinders may have small discontinuities related to the manufacturing process - mushroomed bottoms, offset shoulders, etc. These usually can be identified and are not normally cause for concern.

(i) Cylinders shall be carefully inspected for evidences of exposure to fire. (See WAC 296-24-92005 (3)(j).)

(j) Cylinder necks shall be examined for serious cracks, folds, and flaws. (See WAC 296-24-92005 (3)(l) and (m).)

[Order 73-5, § 296-24-92009, filed 5/9/73 and Order 73-4, § 296-24-92009, filed 5/7/73.]

WAC 296-24-92011 Internal inspection. (1) Cylinders shall be inspected internally at least every time the cylinder is periodically retested. This examination shall be made with a light of sufficient intensity to clearly illuminate the interior walls.

(2) A hammer test consists of tapping a cylinder a light blow with a suitably sized hammer. A cylinder, emptied of liquid content, with a clean internal surface, standing free, will have a clear ring. Cylinders with internal corrosion will give a duller ring dependent upon the amount of corrosion and accumulation of foreign material. Such cylinders shall be investigated. The hammer test is very sensitive and is an easy, quick, and convenient test that can be made without removing the valve before each charging. It is an invaluable indicator of internal corrosion.

[Order 73-5, § 296-24-92011, filed 5/9/73 and Order 73-4, § 296-24-92011, filed 5/7/73.]

WAC 296-24-930 Safety relief devices for compressed gas cylinders.

[Order 73-5, § 296-24-930, filed 5/9/73 and Order 73-4, § 296-24-930, filed 5/7/73.]

WAC 296-24-93001 Definitions. (1) Safety relief device. A "safety relief device" is a device intended to prevent rupture of a cylinder under certain conditions of exposures. (The term as used herein shall include the approach channel, the operating parts, and the discharge channel.)

(2) Approach channel. An "approach channel" is the passage or passages through which gas must pass from the cylinder to reach the operating parts of the safety relief device.

(3) Discharge channel. A "discharge channel" is the passage or passages beyond the operating parts through which gas must pass to reach the atmosphere exclusive of any piping attached to the outlet of the device.

(4) Safety relief device channel. A "safety relief device channel" is the channel through which gas released by operation of the device must pass from the cylinder to the atmosphere exclusive of any piping attached to the inlet or outlet of the device.

(5) Operating part. The "operating part" of a safety relief device is the part of a safety relief device that normally closes the safety discharge channel but when moved from this position as a result of the action of heat or pressure, or a combination of the two, permits escape of gas from the cylinder.

(6) Frangible disc. A "frangible disc" is an operating part in the form of a disc, usually of metal and which is so held as to close the safety relief device channel under normal conditions. The disc is intended to burst at a predetermined pressure to permit the escape of gas.

(7) Pressure opening. A "pressure opening" is the orifice against which the frangible disc functions.

(8) Rated bursting pressure. A "rated bursting pressure" of a frangible disc is the maximum pressure for which the disc is designed to burst when in contact with the pressure opening for which it was designed when tested.

(9) Fusible plug. A "fusible plug" is an operating part in the form of a plug of suitable low melting material, usually a metal alloy, which closes the safety relief device channel under normal conditions and is intended to yield or melt at a predetermined temperature to permit the escape of gas.

(10) Yield temperature. The "yield temperature" of a fusible plug is the temperature at which the fusible metal or alloy will yield when tested.

(11) Reinforced fusible plug. A "reinforced fusible plug" is a fusible plug consisting of a core of suitable material having a comparatively high yield temperature surrounded by a low-melting point fusible metal of the required yield temperature.

(12) Combination frangible disc-fusible plug. A "combination frangible disc-fusible plug" is a frangible disc in combination with a low melting point fusible metal, intended to prevent its bursting at its predetermined bursting pressure unless the temperature also is high enough to cause yielding or melting of the fusible metal

(13) Safety relief valve. A "safety relief valve" is a safety relief device containing an operating part that is held normally in a position closing the safety relief device channel by spring force and is intended to open and to close at predetermined pressures.

(14) Combination safety relief valve and fusible plug. A "combination safety relief valve and fusible plug" is a safety relief device utilizing a safety relief valve in combination with a fusible plug. This combination device may be an integral unit or separate units and is intended to open and to close at predetermined pressures or to open at a predetermined temperature.

(15) Set pressure. The "set pressure" of a safety relief valve is the pressure marked on the valve and at which it is set to start-to-discharge.

(16) Start-to-discharge pressure. The "start-to-discharge pressure" of a safety relief valve is the pressure at which the first bubble appears through a water seal of not over 4 inches in the outlet of the safety relief valve.

(17) Flow capacity. The "flow capacity" of a safety relief device is the capacity in cubic feet per minute of free air discharged at the required flow rating pressure.

(18) Flow rating pressure. The "flow rating pressure" is the pressure at which a safety relief device is rated for capacity.

(19) Nonliquefied compressed gas. A "nonliquefied compressed gas" is a gas, other than a gas in solution which under the charging pressure, is entirely gaseous at a temperature of 70°F.

(20) Liquefied compressed gas. A "liquefied compressed gas" is a gas which, under the charging pressure, is partially liquid at a temperature of 70°F. A flammable compressed gas which is normally nonliquefied at 70°F but which is partially liquid under the charging pressure and temperature, shall follow the requirements for liquefied compressed gases.

(21) Compressed gas in solution. A "compressed gas in solution" (Acetylene) is a nonliquefied gas which is dissolved in a solvent.

(22) Pressurized liquid compressed gas. A "pressurized liquid compressed gas" is a compressed gas other than a compressed gas in solution, which cannot be liquefied at a temperature of 70°F, and which is maintained in the liquid state at a pressure not less than 40 p.s.i.a. by maintaining the gas at a temperature less than 70°F.

(23) Test pressure of the cylinder. The "test pressure of the cylinder" is the minimum pressure at which a cylinder must be tested as prescribed in DOT specifications for compressed gas cylinders 41 CFR Ch. 1.

(24) Free air or free gas. "Free air" or "free gas" is air or gas measured at a pressure of 14.7 pounds per square inch absolute and a temperature of 60°F.

(25) DOT regulations. As used in these standards "DOT regulations" refers to the U.S. Department of Transportation Regulations for Transportation of Explosives and Other Dangerous Articles by Land and Water in Rail Freight, Express and Baggage Services and by Motor Vehicle (Highway) and Water, including Specifications for Shipping Containers, Code of Federal Regulations, Title 49, Parts 171 to 178.

[Order 73-5, § 296-24-93001, filed 5/9/73 and Order 73-4, § 296-24-93001, filed 5/7/73.]

WAC 296-24-93003 General requirements. (1) Application. Compressed gas cylinder, portable tanks, and cargo tanks shall have pressure relief devices installed and maintained in accordance with Compressed Gas Association Pamphlets S-1.1-1963 and 1965 addenda and S-1.2-1963.

(2) Types of safety relief devices. Types of safety relief devices as covered by this section are designated as follows:

(a) Type CG-1: Frangible disc.

(b) Type CG-2: Fusible plug or reinforced fusible plug utilizing a fusible alloy with yield temperature not over 170°F, nor less than 157°F (165°F nominal).

(c) Type CG-3: Fusible plug or reinforced fusible plug utilizing a fusible alloy with yield temperature not over 220°F, nor less than 208°F (212°F nominal).

(d) Type CG-4: Combination frangible disc-fusible plug, utilizing a fusible alloy with yield temperature not over 170°F, nor less than 157°F (165°F nominal).

(e) Type CG-5: Combination frangible disc-fusible plug, utilizing a fusible alloy with yield temperature not over 220°F, nor less than 208°F (212°F nominal).

(f) Type CG-7: Safety relief valve.

(g) Type CG-8: Combination safety relief valve and fusible plug.

(3) Specifications and tests. All safety relief devices covered by this section shall meet the design, construction, marking and test specification of the "Compressed Gas Association Safety Relief Device Standards Part 1-Cylinders for Compressed Gases: S1.1-1963."

(4) Specific requirements for safety relief devices.

(a) Compressed gas cylinders, which under the regulations of the department of transportation must be equipped with safety relief devices, shall be considered acceptable when equipped with devices of proper construction, location, and discharge capacity under the conditions prescribed in Table 1 of the Compressed Gas Associations Standard S-1.1-1963.

(b) Only replacement parts or assemblies provided by the manufacturer shall be used unless the advisability of interchange is proved by adequate tests.

(c) When a frangible disc is used with a compressed gas cylinder, the rated bursting pressure of the disc shall not exceed the minimum required test pressure of the cylinder with which the device is used, except for DOT-3E cylinders (49 CFR Ch. 1) the rated bursting pressure of the device shall not exceed 4,500 pounds per square inch gage (p.s.i.g.).

(d) When a safety relief valve is used on a compressed gas cylinder, the flow rating pressure shall not exceed the minimum required test pressure of the cylinder on which the safety relief valve is installed and the reseating pressure shall not be less than the pressure in a normally charged cylinder at 130°F.

(e) When fittings and piping are used on either the upstream or downstream side or both of a safety relief device or devices, the passages shall be so designed that the flow capacity of the safety relief device will not be reduced below the capacity required for the container on which the safety relief device assembly is installed, nor to the extent that the operation of the device could be impaired. Fittings, piping, and method of attachment shall be designed to withstand normal handling and the pressures developed when the device or devices function.

(f) No shutoff valve shall be installed between the safety relief devices and the cylinder.

(5) Maintenance requirements for safety relief devices.

(a) As a precaution to keep cylinder safety relief devices in reliable operating condition, care shall be taken in the handling or storing of compressed gas cylinders to avoid damage. Care shall also be exercised to avoid plugging by paint or other dirt accumulation of safety relief device channels or other parts which could interfere with the functioning of the device. Only qualified personnel shall be allowed to service safety relief devices.

(b) Each time a compressed gas cylinder is received at a point for refilling, all safety relief devices shall be examined externally for corrosion, damage, plugging of external safety relief device channels, and mechanical defects such as leakage or extrusion of fusible metal. If there is any doubt regarding the suitability of the safety relief device for service the cylinder shall not be filled until it is equipped with a suitable device.

[Order 73-5, § 296-24-93003, filed 5/9/73 and Order 73-4, § 296-24-93003, filed 5/7/73.]

WAC 296-24-935 Safety relief devices for cargo and portable tanks storing compressed gases.

[Order 73-5, § 296-24-935, filed 5/9/73 and Order 73-4, § 296-24-935, filed 5/7/73.]

WAC 296-24-93501 Definitions. (1) Cargo tank. A "cargo tank" means any container designed to be permanently attached to any motor vehicle or other highway vehicle and in which is to be transported any compressed gas. The term "cargo tank" shall not be construed to include any tank used solely for the purpose of supplying fuel for the propulsion of the vehicle or containers fabricated under specifications for cylinders.

(2) Portable tank. A "portable tank" means any container designed primarily to be temporarily attached to a motor vehicle, other vehicle, railroad car other than tank car, or marine vessel, and equipped with skids, mountings, or accessories to facilitate handling of the container by mechanical means, in which is to be transported any compressed gas. The term "portable tank" shall not be construed to include any cargo tank, any tank car tank or any tank of the DOT-106A and DOT-110A-W type.

(3) Safety relief device. A "safety relief device" means a device intended to prevent rupture of a container under certain conditions of exposure.

(4) Safety relief valve. A "safety relief valve" means a safety relief device containing an operating part that is held normally in a position closing the safety relief device channel by spring force and is intended to open and to close at predetermined pressures.

(5) Set pressure. The "set pressure" of a safety relief valve is the pressure marked on the valve and at which the valve is set to start-to-discharge.

(6) Start-to-discharge pressure. The "start-to-discharge pressure" of a safety relief valve is the pressure at which the first bubble appears through a water seal of not over 4 inches on the outlet of the valve.

Note: When the nature of the service requires the use of a metal-to-metal seat safety relief valve, with or without secondary sealing means, the start-to-discharge pressure may be considered the pressure at which an audible discharge occurs.

(7) Resealing pressure. The "resealing pressure" of a safety relief valve is the pressure at which leakage ceases through a water seal of not over 4 inches on the outlet of the valve.

(8) Flow capacity. The "flow capacity" of a safety relief device is the capacity in cubic feet per minute of free air discharged at the required flow rating pressure.

(9) Flow rating pressure. The "flow rating pressure" means the pressure at which a safety relief device is rated for capacity.

(10) Free air or free gas. "Free air" or "free gas" means air or gas measured at a pressure of 14.7 pounds per square inch absolute and a temperature of 60°F.

(11) Frangible disc. A "frangible disc" means a safety relief device in the form of a disc, usually of metal, which is so held as to close the safety relief device channel under normal conditions. The disc is intended to burst at a predetermined pressure to permit the escape of gas.

(12) Fusible plug. A "fusible plug" means a safety relief device in the form of a plug of suitable low-melting material, usually a metal alloy, which closes the safety relief device channel under normal conditions and is intended to yield or melt at a predetermined temperature to permit the escape of gas.

(13) DOT design pressure. The "DOT design pressure" is identical to the term "maximum allowable working pressure" as used in the "code" and is the maximum gage pressure at the top of the tank in its operating position. To determine the minimum permissible thickness of physical characteristics of the different parts of the vessel, the static head of the lading shall be added to the DOT design pressure to determine the thickness of any specific part of the vessel. If vacuum insulation is used, the liquid container shall be designed for a pressure of 15 p.s.i. more than DOT design pressure, plus static head of the lading.

EXCEPTION: For containers constructed in accordance with paragraph U-68 or U-69 of section VIII of the ASME Boiler and Pressure Vessel Code, 1949 Edition, the maximum allowable working pressure for the purpose of these standards is considered to be 125 percent of the design pressure as provided in 49 CFR 173.315 of DOT regulations.

(14) Code. "Code" is defined as paragraph U-68, U-69, U-200, or U-201 of section VIII of the Boiler and Pressure Vessel Code of the American Society of Mechanical Engineers, 1949 Edition, or section VIII of the Boiler and Pressure Vessel Code of the American Society of Mechanical Engineers, 1950, 1952, 1956, 1959, and 1962 Editions; or the Code for Unfired Pressure Vessels for Petroleum Liquids and Gases of the American Petroleum Institute and the American Society of Mechanical Engineers (API-ASME), 1951 Edition.

(15) DOT regulations. The "DOT regulations" refers to department of transportation regulations for transportation of explosives and other dangerous articles by land and water in rail freight, express and baggage services and by motor vehicle (highway) and water, including specifications for shipping containers, Code of Federal Regulations, Title 49, Parts 171 to 178.

[Order 73-5, § 296-24-93501, filed 5/9/73 and Order 73-4, § 296-24-93501, filed 5/7/73.]

WAC 296-24-93503 General requirements. (1) Application. See WAC 296-24-93003(1).

(2) Specifications and tests. All safety relief devices covered by these standards shall meet the design, construction, marking, and test specifications of the "Compressed Gas Association Safety Relief Device Standards Part 2-Cargo and Portable Tanks for Compressed Gases: S-1.2-1963."

(3) Specific requirements for safety relief devices.

(a) Each container shall be provided with one or more safety relief devices which, unless otherwise specified, shall be safety relief valves of the spring-loaded type.

(b) Safety relief valves shall be set to start-to-discharge at a pressure not in excess of 110 percent of the DOT design pressure of the container nor less than the DOT design pressure of the container except as follows:

(i) If an overdesigned container is used, the set pressure of the safety relief valve may be between the minimum required DOT design pressure for the lading and 110 percent of the DOT design pressure of the container used.

(ii) For sulfur dioxide containers, a minimum set pressure of 120 and 110 p.s.i.g. is permitted for the 150 and 125 p.s.i.g. DOT design pressure containers, respectively.

(iii) For carbon dioxide (refrigerated), nitrous oxide (refrigerated), and pressurized liquid argon, nitrogen and oxygen, there shall be no minimum set pressure.

(iv) For butadiene, inhibited, and liquefied petroleum gas containers, a minimum set pressure of 90 percent of the minimum design pressure permitted for these ladings may be used.

(v) For containers constructed in accord with paragraph U-68 or U-69 of the Code 1949 Edition, the set pressure marked on the safety relief valve may be 125 percent of the original DOT design pressure of the container.

(c) Only replacement parts or assemblies provided by the manufacturer of the device shall be used unless the suitability of interchange is proved by adequate tests.

(d) Safety relief valves shall have direct communication with the vapor space of the container.

(e) Any portion of liquid piping or hose which at any time may be closed at each end must be provided with a safety relief device to prevent excessive pressure.

(f) The additional restrictions of this subdivision apply to safety relief devices on containers for carbon dioxide or nitrous oxide which are shipped in refrigerated and insulated containers. The maximum operating pressure in the container may be regulated by the use of one or more pressure controlling devices, which devices shall not be in lieu of the safety relief valve required in WAC 296-24-93503 (3)(a).

(g) All safety relief devices shall be so installed and located that the cooling effect of the contents will not prevent the effective operation of the device.

(h) In addition to the safety relief valves required by WAC 296-24-93503 (3)(a) each container for carbon dioxide may be equipped with one or more frangible disc safety relief devices of suitable design set to function at a pressure not exceeding two times the DOT design pressure of the container.

(i) Subject to conditions of 49 CFR 173.315(a)(1) (DOT regulations) for methyl chloride and sulfur dioxide optional portable tanks of 225 p.s.i.g. minimum DOT design pressure, one or more fusible plugs approved by the Bureau of Explosives, 50 "F" Street Northwest, Washington, D.C. 20001, may be used in lieu of safety relief valves of the spring-loaded type. If the container is over 30 inches long a safety relief device having the total required flow capacity must be at both ends.

(j) When storage containers for liquefied petroleum gas are permitted to be shipped in accordance with 49 CFR 173.315(j) (DOT regulations), they must be equipped with safety relief devices in compliance with the requirements for safety relief devices on above-ground containers as specified in the National Fire Protection Association Pamphlet No. 58-1969 "Standard for the Storage and Handling of Liquefied Petroleum Gases."

(k) When containers are filled by pumping equipment which has a discharge capacity in excess of the capacity of the container safety relief devices, and which is capable of producing pressures in excess of DOT design pressure of the container, precautions should be taken to prevent the development of pressures in the container in excess of 120 percent of its DOT design pressure. This may be done by providing additional capacity of the safety relief valves on the container, by providing a bypass on the pump discharge, or by any other suitable method.

(l) This additional requirement applies to safety relief devices on containers for liquefied hydrogen and pressurized liquid argon, nitrogen, and oxygen. The liquid container shall be protected by one or more safety relief valves and one or more frangible discs.

(m) Safety relief devices shall be arranged to discharge unobstructed to the open air in such a manner as to prevent any impingement of escaping gas upon the container. Safety relief devices shall be arranged to discharge upward except this is not required for carbon dioxide, nitrous oxide and pressurized liquid argon, nitrogen, and oxygen.

(n) No shutoff valves shall be installed between the safety relief devices and the container except, in cases where two or more safety relief devices are installed on the same container, a shutoff valve may be used where the arrangement of the shutoff valve or valves is such as always to insure full required capacity flow through at least one safety relief device.

(4) Maintenance requirements for safety relief devices.

(a) Care shall be exercised to avoid damage to safety relief devices. Care shall also be exercised to avoid plugging by paint or other dirt accumulation of safety relief device channels or other parts which could interfere with the functioning of the device.

(b) Only qualified personnel shall be allowed to service safety relief devices. Any servicing or repairs which require resetting of safety relief valves shall be done only by or after consultation with the valve manufacturer.

(c) Safety relief devices periodically shall be examined externally for corrosion damage, plugging of external safety relief device channels, and mechanical defects such as leakage or extrusion of fusible metal. Valves equipped with secondary resilient seals shall have the seals inspected periodically. If there is any doubt regarding the suitability of the safety relief device for service the container shall not be filled until it is equipped with a suitable safety relief device.

[Statutory Authority: Chapter 49.17 RCW. 94-15-096 (Order 94-07), § 296-24-93503, filed 7/20/94, effective 9/20/94; Order 73-5, § 296-24-93503, filed 5/9/73 and Order 73-4, § 296-24-93503, filed 5/7/73.]

WAC 296-24-940 Air receivers.

[Order 73-5, § 296-24-940, filed 5/9/73 and Order 73-4, § 296-24-940, filed 5/7/73.]

WAC 296-24-94001 General requirements. (1) Application. These standards apply to compressed air receivers, and other equipment used in providing and utilizing compressed air for performing operations such as cleaning, drilling, hoisting, and chipping. On the other hand, however, this section does not deal with the special problems created by using compressed air to convey materials nor the problems created when working in compressed air as in tunnels and caissons. These standards are not intended to apply to compressed air machinery and equipment used on transportation vehicles such as steam railroad cars, electric railway cars, and automotive equipment.

(2) New and existing equipment.

(a) All new air receivers installed after the effective date of these standards shall be constructed in accordance with the 1968 Edition of the A.S.M.E. Boiler and Pressure Vessel Code, section VIII.

(b) All safety valves used shall be constructed, installed, and maintained in accordance with the A.S.M.E. Boiler and Pressure Vessel Code, section VIII edition 1968.

[Statutory Authority: Chapter 49.17 RCW. 94-15-096 (Order 94-07), § 296-24-94001, filed 7/20/94, effective 9/20/94; Order 73-5, § 296-24-94001, filed 5/9/73 and Order 73-4, § 296-24-94001, filed 5/7/73.]

WAC 296-24-94003 Installation and equipment requirements. (1) Installation. Air receivers shall be so installed that all drains, handholes, and manholes therein are easily accessible. Air receivers should be supported with sufficient clearance to permit a complete external inspection and to avoid corrosion of external surfaces. Under no circumstances shall an air receiver be buried underground or located in an inaccessible place. The receiver should be located as close to the compressor or after-cooler as is possible in order to keep the discharge pipe short.

(2) Drains and traps. All air receivers having an internal and external operating pressure exceeding 15 psi with no limitation on size, and air receivers having an inside diameter exceeding six inches, with no limitation on pressure, if subject to corrosion, shall be supplied with a drain pipe and valve at the lowest point in the vessel; or a pipe may be used extending inward from any other location to within one-quarter inch of the lowest point. Adequate automatic traps may be installed in addition to drain valves. The drain valve on the air receiver shall be opened and the receiver completely drained frequently and at such intervals as to prevent the accumulation of oil and water in the receiver.

(3) Gages and valves.

(a) Every air receiver shall be equipped with an indicating pressure gage (so located as to be readily visible) and with one or more spring-loaded safety valves. The total relieving capacity of such safety valves shall be such as to prevent pressure in the receiver from exceeding the maximum allowable working pressure of the receiver by more than 10 percent.

(b) No valve of any type shall be placed between the air receiver and its safety valve or valves.

(c) Safety appliances, such as safety valves, indicating devices and controlling devices, shall be constructed, located, and installed so that they cannot be readily rendered inoperative by any means, including the elements.

(d) All safety valves shall be tested frequently and at regular intervals to determine whether they are in good operating condition.

[Statutory Authority: Chapter 49.17 RCW. 89-11-035 (Order 89-03), § 296-24-94003, filed 5/15/89, effective 6/30/89; Order 73-5, § 296-24-94003, filed 5/9/73 and Order 73-4, § 296-24-94003, filed 5/7/73.]

PART L
ELECTRICAL

WAC 296-24-956 Electrical. This section addresses electrical safety requirements that are necessary for the practical safeguarding of employees in their workplaces.

[Statutory Authority: RCW 49.17.040 and 49.17.050. 82-08-026 (Order 82-10), § 296-24-956, filed 3/30/82.]

WAC 296-24-95601 Definitions applicable to WAC 296-24-956 through 296-24-985. Unless the context indicates otherwise, words used in this section shall have the meaning given.

(1) **Acceptable.** An installation or equipment is acceptable to the director of labor and industries, and approved within the meaning of this section:

(a) If it is accepted, or certified, or listed, or labeled, or otherwise determined to be safe by a nationally recognized testing laboratory; or

(b) With respect to an installation or equipment of a kind which no nationally recognized testing laboratory accepts, certifies, lists, labels, or determines to be safe, if it is inspected or tested by another federal agency, or by a state, municipal, or other local authority responsible for enforcing occupational safety provisions of the National Electrical Code, and found in compliance with the provisions of the National Electrical Code as applied in this section; or

(c) With respect to custom-made equipment or related installations which are designed, fabricated for, and intended for use by a particular customer, if it is determined to be safe for its intended use by its manufacturer on the basis of test data which the employer keeps and makes available for inspection to the director and his/her authorized representatives. Refer to federal regulation 29 CFR 1910.7 for definition of nationally recognized testing laboratory.

(2) **Accepted.** An installation is "accepted" if it has been inspected and found by a nationally recognized testing laboratory to conform to specified plans or to procedures of applicable codes.

(3) **Accessible.** (As applied to wiring methods.) Capable of being removed or exposed without damaging the building structure of finish, or not permanently closed in by the structure or finish of the building. (See "concealed" and "exposed.")

(4) **Accessible.** (As applied to equipment.) Admitting close approach; not guarded by locked doors, elevation, or other effective means. (See "readily accessible.")

(5) **Ampacity.** Current-carrying capacity of electric conductors expressed in amperes.

(6) **Appliances.** Utilization equipment, generally other than industrial, normally built in standardized sizes or types, which is installed or connected as a unit to perform one or more functions such as clothes washing, air conditioning, food mixing, deep frying, etc.

(7) **Approved.** Acceptable to the authority enforcing this section. The authority enforcing this section is the director of labor and industries. The definition of "acceptable" indicates what is acceptable to the director and therefore approved within the meaning of this section.

(8) **Approved for the purpose.** Approved for a specific purpose, environment, or application described in a particular standard requirement.

Suitability of equipment or materials for a specific purpose, environment or application may be determined by a nationally recognized testing laboratory, inspection agency or other organization concerned with product evaluation as

part of its listing and labeling program. (See "labeled" or "listed.")

(9) **Armored cable.** Type AC armored cable is a fabricated assembly of insulated conductors in a flexible metallic enclosure.

(10) **Askarel.** A generic term for a group of nonflammable synthetic chlorinated hydrocarbons used as electrical insulating media. Askarels of various compositional types are used. Under arcing conditions the gases produced, while consisting predominantly of noncombustible hydrogen chloride, can include varying amounts of combustible gases depending upon the askarel type.

(11) **Attachment plug (plug cap) (cap).** A device which, by insertion in a receptacle, establishes connection between the conductors of the attached flexible cord and the conductors connected permanently to the receptacle.

(12) **Automatic.** Self-acting, operating by its own mechanism when actuated by some impersonal influence, as, for example, a change in current strength, pressure, temperature, or mechanical configuration.

(13) **Bare conductor, see "conductor."**

(14) **Bonding.** The permanent joining of metallic parts to form an electrically conductive path which will assure electrical continuity and the capacity to conduct safely any current likely to be imposed.

(15) **Bonding jumper.** A reliable conductor to assure the required electrical conductivity between metal parts required to be electrically connected.

(16) **Branch circuit.** The circuit conductors between the final overcurrent device protecting the circuit and the outlet(s).

(17) **Building.** A structure which stands alone or which is cut off from adjoining structures by fire walls with all openings therein protected by approved fire doors.

(18) **Cabinet.** An enclosure designed either for surface or flush mounting, and provided with a frame, mat, or trim in which a swinging door or doors are or may be hung.

(19) **Cable tray system.** A cable tray system is a unit or assembly of units or sections, and associated fittings, made of metal or other noncombustible materials forming a rigid structural system used to support cables. Cable tray systems include ladders, troughs, channels, solid bottom trays, and other similar structures.

(20) **Cablebus.** Cablebus is an approved assembly of insulated conductors with fittings and conductor terminations in a completely enclosed, ventilated, protective metal housing.

(21) **Center pivot irrigation machine.** A center pivot irrigation machine is a multimotored irrigation machine which revolves around a central pivot and employs alignment switches or similar devices to control individual motors.

(22) **Certified.** Equipment is "certified" if it (a) has been tested and found by a nationally recognized testing laboratory to meet nationally recognized standards or to be safe for use in a specified manner, or (b) is of a kind whose production is periodically inspected by a nationally recognized testing laboratory, and (c) it bears a label, tag, or other record of certification.

(23) **Circuit breaker.**

(a) **(600 volts nominal, or less.)** A device designed to open and close a circuit by nonautomatic means and to open the circuit automatically on a predetermined overcurrent without injury to itself when properly applied within its rating.

(b) **(Over 600 volts, nominal.)** A switching device capable of making, carrying, and breaking currents under normal circuit conditions, and also making, carrying for a specified time, and breaking currents under specified abnormal circuit conditions, such as those of short circuit.

(24) **Class I locations.** Class I locations are those in which flammable gases or vapors are or may be present in the air in quantities sufficient to produce explosive or ignitible mixtures. Class I locations include the following:

(a) **Class I, Division 1.** A Class I, Division 1 location is a location:

(i) In which hazardous concentrations of flammable gases or vapors may exist under normal operating conditions; or

(ii) In which hazardous concentrations of such gases or vapors may exist frequently because of repair or maintenance operations or because of leakage; or

(iii) In which breakdown or faulty operation of equipment or processes might release hazardous concentrations of flammable gases or vapors, and might also cause simultaneous failure of electric equipment.

Note: This classification usually includes locations where volatile flammable liquids or liquefied flammable gases are transferred from one container to another; interiors of spray booths and areas in the vicinity of spraying and painting operations where volatile flammable solvents are used; locations containing open tanks or vats of volatile flammable liquids; drying rooms or compartments for the evaporation of flammable solvents; locations containing fat and oil extraction equipment using volatile flammable solvents; portions of cleaning and dyeing plants where flammable liquids are used; gas generator rooms and other portions of gas manufacturing plants where flammable gas may escape; inadequately ventilated pump rooms for flammable gas or for volatile flammable liquids; the interiors of refrigerators and freezers in which volatile flammable materials are stored in open, lightly stoppered, or easily ruptured containers; and all other locations where ignitible concentrations of flammable vapors or gases are likely to occur in the course of normal operations.

(b) **Class I, Division 2.** A Class I, Division 2 location is a location:

(i) In which volatile flammable liquids or flammable gases are handled, processed, or used, but in which the hazardous liquids, vapors, or gases will normally be confined within closed containers or closed systems from which they can escape only in case of accidental rupture or breakdown of such containers or systems, or in case of abnormal operation of equipment; or

(ii) In which hazardous concentrations of gases or vapors are normally prevented by positive mechanical ventilation, and which might become hazardous through failure or abnormal operations of the ventilating equipment; or

(iii) That is adjacent to a Class I, Division 1 location, and to which hazardous concentrations of gases or vapors might occasionally be communicated unless such communication is prevented by adequate positive-pressure ventilation from a source of clean air, and effective safeguards against ventilation failure are provided.

Note: This classification usually includes locations where volatile flammable liquids or flammable gases or vapors are used,

but which would become hazardous only in case of an accident or of some unusual operating condition. The quantity of flammable material that might escape in case of accident, the adequacy of ventilating equipment, the total area involved, and the record of the industry or business with respect to explosions or fires are all factors that merit consideration in determining the classification and extent of each location.

Piping without valves, checks, meters, and similar devices would not ordinarily introduce a hazardous condition even though used for flammable liquids or gases. Locations used for the storage of flammable liquids or a liquefied or compressed gases in sealed containers would not normally be considered hazardous unless also subject to other hazardous conditions.

Electrical conduits and their associated enclosures separated from process fluids by a single seal or barrier are classed as a Division 2 location if the outside of the conduit and enclosures is a nonhazardous location.

(25) **Class II locations.** Class II locations are those that are hazardous because of the presence of combustible dust. Class II locations include the following:

(a) **Class II, Division 1.** A Class II, Division 1 location is a location:

(i) In which combustible dust is or may be in suspension in the air under normal operating conditions, in quantities sufficient to produce explosives or ignitible mixtures; or

(ii) Where mechanical failure or abnormal operation of machinery or equipment might cause such explosive or ignitible mixtures to be produced, and might also provide a source of ignition through simultaneous failure of electric equipment, operation of protection devices, or from other causes; or

(iii) In which combustible dusts of an electrically conductive nature may be present.

Note: This classification may include areas of grain handling and processing plants, starch plants, sugar-pulverizing plants, malting plants, hay-grinding plants, coal pulverizing plants, areas where metal dusts and powders are produced or processed, and other similar locations which contain dust producing machinery and equipment (except where the equipment is dust-tight or vented to the outside). These areas would have combustible dust in the air, under normal operating conditions, in quantities sufficient to produce explosive or ignitible mixtures. Combustible dusts which are electrically nonconductive include dusts produced in the handling and processing of grain and grain products, pulverized sugar and cocoa, dried egg and milk powders, pulverized spices, starch and pastes, potato and woodflour, oil meal from beans and seed, dried hay, and other organic materials which may produce combustible dusts when processed or handled. Dusts containing magnesium or aluminum are particularly hazardous and the use of extreme caution is necessary to avoid ignition and explosion.

(b) **Class II, Division 2.** A Class II, Division 2 location is a location in which:

(i) Combustible dust will not normally be in suspension in the air in quantities sufficient to produce explosive or ignitible mixtures; and dust accumulations are normally insufficient to interfere with the normal operation of electrical equipment or other apparatus; or

(ii) Dust may be in suspension in the air as a result of infrequent malfunctioning of handling or processing equipment, and dust accumulations resulting therefrom may be ignitible by abnormal operation or failure of electrical equipment or other apparatus.

Note: This classification includes locations where dangerous concentrations of suspended dust would not be likely but where dust accumulations might form on or in the vicinity of electric equipment. These areas may contain equipment from which appreciable quantities of dust would escape under abnormal operating conditions or be adjacent to a Class II Division 1 location, as described above, into which an explosive or ignitible concentration of dust may be put into suspension under abnormal operating conditions.

(26) **Class III locations.** Class III locations are those that are hazardous because of the presence of easily ignitible fibers or flyings but in which such fibers or flyings are not likely to be in suspension in the air in quantities sufficient to produce ignitible mixtures. Class III locations include the following:

(a) **Class III, Division 1.** A Class III, Division 1 location is a location in which easily ignitible fibers or materials producing combustible flyings are handled, manufactured, or used.

Note: Such locations usually include some parts of rayon, cotton, and other textile mills; combustible fiber manufacturing and processing plants; cotton gins and cottonseed mills; flax-processing plants; clothing manufacturing plants; woodworking plants, and establishments; and industries involving similar hazardous processes or conditions.

Easily ignitible fibers and flyings include rayon, cotton (including cotton linters and cotton waste), sisal or henequen, istle, jute, hemp, tow, cocoa fiber, oakum, baled waste kapok, Spanish moss, excelsior, and other materials of similar nature.

(b) **Class III, Division 2.** A Class III, Division 2 location is a location in which easily ignitible fibers are stored or handled, except in process of manufacture.

(27) **Collector ring.** A collector ring is an assembly of slip rings for transferring electrical energy from a stationary to a rotating member.

(28) **Concealed.** Rendered inaccessible by the structure or finish of the building. Wires in concealed raceways are considered concealed, even though they may become accessible by withdrawing them. (See "accessible. (As applied to wiring methods.")))

(29) **Conductor.**

(a) **Bare.** A conductor having no covering or electrical insulation whatsoever.

(b) **Covered.** A conductor encased within material of composition or thickness that is not recognized as electrical insulation.

(c) **Insulated.** A conductor encased within material of composition and thickness that is recognized as electrical insulation.

(30) **Conduit body.** A separate portion of a conduit or tubing system that provides access through a removable cover(s) to the interior of the system at a junction of two or more sections of the system or at a terminal point of the system. Boxes such as FS and FD or larger cast or sheet metal boxes are not classified as conduit bodies.

(31) **Controller.** A device or group of devices that serves to govern, in some predetermined manner, the electric power delivered to the apparatus to which it is connected.

(32) **Cooking unit, counter-mounted.** A cooking appliance designed for mounting in or on a counter and consisting of one or more heating elements, internal wiring, and built-in or separately mountable controls. (See "oven, wall-mounted.")

(33) **Covered conductor.** See "conductor."

(34) **Cutout.** (Over 600 volts, nominal.) An assembly of a fuse support with either a fuseholder, fuse carrier, or disconnecting blade. The fuseholder or fuse carrier may include a conducting element (fuse link), or may act as the disconnecting blade by the inclusion of an nonfusible member.

(35) **Cutout box.** An enclosure designed for surface mounting and having swinging doors or covers secured directly to and telescoping with the walls of the box proper. (See "cabinet.")

(36) **Damp location.** See "location."

(37) **Dead front.** Without live parts exposed to a person on the operating side of the equipment.

(38) **Device.** A unit of an electrical system which is intended to carry but not utilize electric energy.

(39) **Dielectric heating.** Dielectric heating is the heating of a nominally insulating material due to its own dielectric losses when the materials is placed in a varying electric filed.

(40) **Disconnecting means.** A device, or group of devices, or other means by which the conductors of a circuit can be disconnected from their source of supply.

(41) **Disconnecting (or isolating) switch.** (Over 600 volts, nominal.) A mechanical switching device used for isolating a circuit or equipment from a source of power.

(42) **Dry location.** See "location."

(43) **Electric sign.** A fixed, stationary, or portable self-contained, electrically illuminated utilization equipment with words or symbols designed to convey information or attract attention.

(44) **Enclosed.** Surrounded by a case, housing, fence or walls which will prevent persons from accidentally contacting energized parts.

(45) **Enclosure.** The case or housing of apparatus, or the fence or walls surrounding an installation to prevent personnel from accidentally contacting energized parts, or to protect the equipment from physical damage.

(46) **Equipment.** A general term including material, fittings, devices, appliances, fixtures, apparatus, and the like, used as a part of, or in connection with, an electrical installation.

(47) **Equipment grounding conductor.** See "grounding conductor, equipment."

(48) **Explosion-proof apparatus.** Apparatus enclosed in a case that is capable of withstanding an explosion of a specified gas or vapor which may occur within it and of preventing the ignition of a specified gas or vapor surrounding the enclosure by sparks, flashes, or explosion of the gas or vapor within, and which operates at such an external temperature that it will not ignite a surrounding flammable atmosphere.

(49) **Exposed.** (As applied to live parts.) Capable of being inadvertently touched or approached nearer than a safe distance by a person. It is applied to parts not suitably guarded, isolated, or insulated. (See "accessible" and "concealed.")

(50) **Exposed.** (As applied to wiring methods.) On or attached to the surface or behind panels designed to allow access. (See "accessible. (As applied to wiring methods.")

(51) **Exposed.** (For the purpose of WAC 296-24-95615(5), communications systems.) Where the circuit is in such a position that in case of failure of supports or insulation, contact with another circuit may result.

(52) **Externally operable.** Capable of being operated without exposing the operator to contact with live parts.

(53) **Feeder.** All circuit conductors between the service equipment, or the generator switchboard of an isolated plant, and the final branch-circuit overcurrent device.

(54) **Fitting.** An accessory such as a locknut, bushing, or other part of a wiring system that is intended primarily to perform a mechanical rather than an electrical function.

(55) **Fuse.** (Over 600 volts, nominal.) An overcurrent protective device with a circuit opening fusible part that is heated and severed by the passage of overcurrent through it. A fuse comprises all the parts that form a unit capable of performing the prescribed functions. It may or may not be the complete device necessary to connect it into an electrical circuit.

(56) **Ground.** A conducting connection, whether intentional or accidental, between an electrical circuit or equipment and the earth, or to some conducting body that serves in place of the earth.

(57) **Grounded.** Connected to earth or to some conducting body that serves in place of the earth.

(58) **Grounded, effectively.** (Over 600 volts, nominal.) Permanently connected to earth through a ground connection of sufficiently low impedance and having sufficient ampacity that ground fault current which may occur cannot build up to voltages dangerous to personnel.

(59) **Grounded conductor.** A system or circuit conductor that is intentionally grounded.

(60) **Grounding conductor.** A conductor used to connect equipment or the grounded circuit of a wiring system to a grounding electrode or electrodes.

(61) **Grounding conductor, equipment.** The conductor used to connect the noncurrent-carrying metal parts of equipment, raceways, and other enclosures to the system grounded conductor and/or the grounding electrode conductor at the service equipment or at the source of a separately derived system.

(62) **Grounding electrode conductor.** The conductor used to connect the grounding electrode to the equipment grounding conductor and/or to the grounded conductor of the circuit at the service equipment or at the source of a separately derived system.

(63) **Ground-fault circuit-interrupter.** A device whose function is to interrupt the electric circuit to the load when a fault current to ground exceeds some predetermined value that is less than that required to operate the overcurrent protective device of the supply circuit.

(64) **Guarded.** Covered, shielded, fenced, enclosed, or otherwise protected by means of suitable covers, casings, barriers, rails, screens, mats, or platforms to remove the likelihood of approach to a point of danger or contact by persons or objects.

(65) **Health care facilities.** Buildings or portions of buildings and mobile homes that contain, but are not limited

to, hospitals, nursing homes, extended care facilities, clinics, and medical and dental offices, whether fixed or mobile.

(66) **Heating equipment.** For the purposes of WAC 296-24-95611(7), the term "heating equipment" includes any equipment used for heating purposes if heat is generated by induction or dielectric methods.

(67) **Hoistway.** Any shaftway, hatchway, well hole, or other vertical opening or space in which an elevator or dumbwaiter is designed to operate.

(68) **Identified.** Identified, as used in reference to a conductor or its terminal, means that such conductor or terminal can be readily recognized as grounded.

(69) **Induction heating.** Induction heating is the heating of a nominally conductive material due to its own I^2R losses when the material is placed in a varying electromagnetic field.

(70) **Insulated conductor.** See "conductor."

(71) **Interrupter switch.** (Over 600 volts, nominal.) A switch capable of making, carrying, and interrupting specified currents.

(72) **Irrigation machine.** An irrigation machine is an electrically driven or controlled machine, with one or more motors, not hand portable, and used primarily to transport and distribute water for agricultural purposes.

(73) **Isolated.** Not readily accessible to persons unless special means for access are used.

(74) **Isolated power system.** A system comprising an isolating transformer or its equivalent, a line isolation monitor, and its ungrounded circuit conductors.

(75) **Labeled.** Equipment is "labeled" if there is attached to it a label, symbol, or other identifying mark of a nationally recognized testing laboratory which, (a) makes periodic inspections of the production of such equipment, and (b) whose labeling indicates compliance with nationally recognized standards or tests to determine safe use in a specified manner.

(76) **Lighting outlet.** An outlet intended for the direct connection of a lampholder, a lighting fixture, or a pendant cord terminating in a lampholder.

(77) **Line-clearance tree trimming.** The pruning, trimming, repairing, maintaining, removing, or clearing of trees or cutting of brush that is within 10 feet of electric supply lines and equipment.

(78) **Listed.** Equipment is "listed" if it is of a kind mentioned in a list which, (a) is published by a nationally recognized laboratory which makes periodic inspection of the production of such equipment, and (b) states such equipment meets nationally recognized standards or has been tested and found safe for use in a specified manner.

(79) **Location.**

(a) **Damp location.** Partially protected locations under canopies, marquees, roofed open porches, and like locations, and interior locations subject to moderate degrees of moisture, such as some basements, some barns, and some cold-storage warehouses.

(b) **Dry location.** A location not normally subject to dampness or wetness. A location classified as dry may be temporarily subject to dampness or wetness, as in the case of a building under construction.

(c) **Wet location.** Installations underground or in concrete slabs or masonry in direct contact with the earth, and locations subject to saturation with water or other liquids, such as vehicle-washing areas, and locations exposed to weather and unprotected.

(80) **Medium voltage cable.** Type MV medium voltage cable is a single or multiconductor solid dielectric insulated cable rated 2000 volts or higher.

(81) **Metal-clad cable.** Type MC cable is a factory assembly of one or more conductors, each individually insulated and enclosed in a metallic sheath of interlocking tape, or a smooth or corrugated tube.

(82) **Mineral-insulated metal-sheathed cable.** Type MI mineral-insulated metal-sheathed cable is a factory assembly of one or more conductors insulated with a highly compressed refractory mineral insulation and enclosed in a liquidtight and gastight continuous copper sheath.

(83) **Mobile X ray.** X-ray equipment mounted on a permanent base with wheels and/or casters for moving while completely assembled.

(84) **Nonmetallic-sheathed cable.** Nonmetallic-sheathed cable is a factory assembly of two or more insulated conductors having an outer sheath of moisture resistant, flame-retardant, nonmetallic material. Nonmetallic sheathed cable is manufactured in the following types:

(a) **Type NM.** The overall covering has a flame-retardant and moisture-resistant finish.

(b) **Type NMC.** The overall covering is flame-retardant, moisture-resistant, fungus-resistant, and corrosion-resistant.

(85) **Oil (filled) cutout.** (Over 600 volts, nominal.) A cutout in which all or part of the fuse support and its fuse link or disconnecting blade are mounted in oil with complete immersion of the contacts and the fusible portion of the conducting element (fuse link), so that arc interruption by severing of the fuse link or by opening of the contacts will occur under oil.

(86) **Open wiring on insulators.** Open wiring on insulators is an exposed wiring method using cleats, knobs, tubes, and flexible tubing for the protection and support of single insulated conductors run in or on buildings, and not concealed by the building structure.

(87) **Outlet.** A point on the wiring system at which current is taken to supply utilization equipment.

(88) **Outline lighting.** An arrangement of incandescent lamps or electric discharge tubing to outline or call attention to certain features such as the shape of a building or the decoration of a window.

(89) **Oven, wall-mounted.** An oven for cooking purposes designed for mounting in or on a wall or other surface and consisting of one or more heating elements, internal wiring, and built-in or separately mountable controls. (See "cooking unit, counter-mounted.")

(90) **Overcurrent.** Any current in excess of the rated current of equipment or the ampacity of a conductor. It may result from overload (see definition), short circuit, or ground fault. A current in excess of rating may be accommodated by certain equipment and conductors for a given set of conditions. Hence the rules for overcurrent protection are specific for particular situations.

(91) **Overload.** Operation of equipment in excess of normal, full load rating, or of a conductor in excess of rated ampacity which, when it persists for a sufficient length of time, would cause damage or dangerous overheating. A fault,

such as a short circuit or ground fault, is not an overload. (See "overcurrent.")

(92) **Panelboard.** A single panel or group of panel units designed for assembly in the form of a single panel; including buses, automatic overcurrent devices, and with or without switches for the control of light, heat, or power circuits; designed to be placed in a cabinet or cutout box placed in or against a wall or partition and accessible only from the front. (See "switchboard.")

(93) **Permanently installed decorative fountains and reflection pools.** Those that are constructed in the ground, on the ground, or in a building in such a manner that the pool cannot be readily disassembled for storage and are served by electrical circuits of any nature. These units are primarily constructed for their aesthetic value and not intended for swimming or wading.

(94) **Permanently installed swimming pools, wading and therapeutic pools.** Those that are constructed in the ground, on the ground, or in a building in such a manner that the pool cannot be readily disassembled for storage whether or not served by electrical circuits of any nature.

(95) **Portable X ray.** X-ray equipment designed to be hand-carried.

(96) **Power and control tray cable.** Type TC power and control tray cable is a factory assembly of two or more insulated conductors, with or without associated bare or covered grounding conductors under a nonmetallic sheath, approved for installation in cable trays, in raceways, or where supported by a messenger wire.

(97) **Power fuse.** (Over 600 volts, nominal.) See "fuse."

(98) **Power-limited tray cable.** Type PLTC nonmetallic-sheathed power limited tray cable is a factory assembly of two or more insulated conductors under a nonmetallic jacket.

(99) **Power outlet.** An enclosed assembly which may include receptacles, circuit breakers, fuseholders, fused switches, buses and watt-hour meter mounting means; intended to supply and control power to mobile homes, recreational vehicles or boats, or to serve as a means for distributing power required to operate mobile or temporarily installed equipment.

(100) **Premises wiring system.** That interior and exterior wiring, including power, lighting, control, and signal circuit wiring together with all of its associated hardware, fittings, and wiring devices, both permanently and temporarily installed, which extends from the load end of the service drop, or load end of the service lateral conductors to the outlet(s). Such wiring does not include wiring internal to appliances, fixtures, motors, controllers, motor control centers, and similar equipment.

(101) **Qualified person.** One familiar with the construction and operation of the equipment and the hazards involved.

Note 1: Whether an employee is considered to be a "qualified person" will depend upon various circumstances in the workplace. It is possible and, in fact, likely for an individual to be considered "qualified" with regard to certain equipment in the workplace, but "unqualified" as to other equipment. (See WAC 296-24-970 for training requirements that specifically apply to qualified persons.)

Note 2: An employee who is undergoing on-the-job training and who, in the course of such training, has demonstrated an ability to perform duties safely at his or her level of training and who is under the direct supervision of a qualified person is considered to be a qualified person for the performance of those duties.

(102) **Raceway.** A channel designed expressly for holding wires, cables, or busbars, with additional functions as permitted in this part. Raceways may be of metal or insulating material, and the term includes rigid metal conduit, rigid nonmetallic conduit, intermediate metal conduit, liquidtight flexible metal conduit, flexible metallic tubing, flexible metal conduit, electrical metallic tubing, underfloor raceways, cellular concrete floor raceways, cellular metal floor raceways, surface raceways, wireways, and busways.

(103) **Readily accessible.** Capable of being reached quickly for operation, renewal, or inspections, without requiring those to whom ready access is requisite to climb over or remove obstacles or to resort to portable ladders, chairs, etc. (See "accessible.")

(104) **Receptacle.** A receptacle is a contact device installed at the outlet for the connection of a single attachment plug. A single receptacle is a single contact device with no other contact device on the same yoke. A multiple receptacle is a single device containing two or more receptacles.

(105) **Receptacle outlet.** An outlet where one or more receptacles are installed.

(106) **Remote-control circuit.** Any electric circuit that controls any other circuit through a relay or an equivalent device.

(107) **Sealable equipment.** Equipment enclosed in a case or cabinet that is provided with a means of sealing or locking so that live parts cannot be made accessible without opening the enclosure. The equipment may or may not be operable without opening the enclosure.

(108) **Separately derived system.** A premises wiring system whose power is derived from generator, transformer, or converter winding and has no direct electrical connection, including a solidly connected grounded circuit conductor, to supply conductors originating in another system.

(109) **Service.** The conductors and equipment for delivering energy from the electricity supply system to the wiring system of the premises served.

(110) **Service cable.** Service conductors made up in the form of a cable.

(111) **Service conductors.** The supply conductors that extend from the street main or from transformers to the service equipment of the premises supplied.

(112) **Service drop.** The overhead service conductors from the last pole or other aerial support to and including the splices, if any, connecting to the service-entrance conductors at the building or other structure.

(113) **Service-entrance cable.** Service-entrance cable is a single conductor or multiconductor assembly provided with or without an overall covering, primarily used for services and of the following types:

(a) *Type SE*, having a flame-retardant, moisture-resistant covering, but not required to have inherent protection against mechanical abuse.

(b) *Type USE,* recognized for underground use, having a moisture-resistant covering, but not required to have a flame-retardant covering or inherent protection against mechanical abuse. Single-conductor cables having an insulation specifically approved for the purpose do not require an outer covering.

(114) **Service-entrance conductors, overhead system.** The service conductors between the terminals of the service

equipment and a point usually outside the building, clear of building walls, where joined by tap or splice to the service drop.

(115) **Service entrance conductors, underground system.** The service conductors between the terminals of the service equipment and the point of connection to the service lateral. Where service equipment is located outside the building walls, there may be no service-entrance conductors, or they may be entirely outside the building.

(116) **Service equipment.** The necessary equipment, usually consisting of a circuit breaker or switch and fuses, and their accessories, located near the point of entrance of supply conductors to a building or other structure, or an otherwise defined area, and intended to constitute the main control and means of cutoff of the supply.

(117) **Service raceway.** The raceway that encloses the service-entrance conductors.

(118) **Shielded nonmetallic-sheathed cable.** Type SNM, shielded nonmetallic-sheathed cable is a factory assembly of two or more insulated conductors in an extruded core of moisture-resistant, flame-resistant nonmetallic material, covered with an overlapping spiral metal tape and wire shield and jacketed with an extruded moisture-resistant, flame-resistant, oil-resistant, corrosion-resistant, fungus-resistant, and sunlight-resistant nonmetallic material.

(119) **Show window.** Any window used or designed to be used for the display of goods or advertising material, whether it is fully or partly enclosed or entirely open at the rear and whether or not it has a platform raised higher than the street floor level.

(120) **Sign.** See "electric sign."

(121) **Signaling circuit.** Any electric circuit that energizes signaling equipment.

(122) **Special permission.** The written consent of the authority having jurisdiction.

(123) **Storable swimming or wading pool.** A pool with a maximum dimension of fifteen feet and a maximum wall height of three feet and is so constructed that it may be readily disassembled for storage and reassembled to its original integrity.

(124) **Switchboard.** A large single panel, frame, or assembly of panels which have switches, buses, instruments, overcurrent and other protective devices mounted on the face or back or both. Switchboards are generally accessible from the rear as well as from the front and are not intended to be installed in cabinets. (See "panelboard.")

(125) **Switches.**

(a) **General-use switch.** A switch intended for use in general distribution and branch circuits. It is rated in amperes, and it is capable of interrupting its rated current at its rated voltage.

(b) **General-use snap switch.** A form of general-use switch so constructed that it can be installed in flush device boxes or on outlet box covers, or otherwise used in conjunction with wiring systems recognized by this part.

(c) **Isolating switch.** A switch intended for isolating an electric circuit from the source of power. It has no interrupting rating, and it is intended to be operated only after the circuit has been opened by some other means.

(d) **Motor-circuit switch.** A switch, rated in horsepower, capable of interrupting the maximum operating overload current of a motor of the same horsepower rating as the switch at the rated voltage.

(126) **Switching devices.** (Over 600 volts, nominal.) Devices designed to close and/or open one or more electric circuits. Included in this category are circuit breakers, cutouts, disconnecting (or isolating) switches, disconnecting means, interrupter switches, and oil (filled) cutouts.

(127) **Transportable X ray.** X-ray equipment installed in a vehicle or that may readily be disassembled for transport in a vehicle.

(128) **Utilization equipment.** Utilization equipment means equipment which utilizes electric energy for mechanical, chemical, heating, lighting, or similar useful purpose.

(129) **Utilization system.** A utilization system is a system which provides electric power and light for employee workplaces, and includes the premises wiring system and utilization equipment.

(130) **Ventilated.** Provided with a means to permit circulation of air sufficient to remove an excess of heat, fumes, or vapors.

(131) **Volatile flammable liquid.** A flammable liquid having a flash point below 38 degrees C (100 degrees F) or whose temperature is above its flash point.

(132) **Voltage (of a circuit).** The greatest root-mean-square (effective) difference of potential between any two conductors of the circuit concerned.

(133) **Voltage, nominal.** A nominal value assigned to a circuit or system for the purpose of conveniently designating its voltage class (as 120/240, 480Y/277, 600, etc.). The actual voltage at which a circuit operates can vary from the nominal within a range that permits satisfactory operation of equipment.

(134) **Voltage to ground.** For grounded circuits, the voltage between the given conductor and that point or conductor of the circuit that is grounded; for undergrounded circuits, the greatest voltage between the given conductor and any other conductor of the circuit.

(135) **Watertight.** So constructed that moisture will not enter the enclosure.

(136) **Weatherproof.** So constructed or protected that exposure to the weather will not interfere with successful operation. Rainproof, raintight, or watertight equipment can fulfill the requirements for weatherproof where varying weather conditions other than wetness, such as snow, ice, dust, or temperature extremes, are not a factor.

(137) **Wet location.** See "location."

(138) **Wireways.** Wireways are sheet-metal troughs with hinged or removable covers for housing and protecting electric wires and cable and in which conductors are laid in place after the wireway has been installed as a complete system.

[Statutory Authority: Chapter 49.17 RCW. 94-15-096 (Order 94-07), § 296-24-95601, filed 7/20/94, effective 9/20/94; 91-24-017 (Order 91-07), § 296-24-95601, filed 11/22/91, effective 12/24/91; 88-23-054 (Order 88-25), § 296-24-95601, filed 11/14/88; 87-24-051 (Order 87-24), § 296-24-95601, filed 11/30/87. Statutory Authority: RCW 49.17.040 and 49.17.050. 82-08-026 (Order 82-10), § 296-24-95601, filed 3/30/82.]

WAC 296-24-95603 Electric utilization systems. (1) **Scope.**

(a) **Covered.** The provisions of WAC 296-24-95603 through 296-24-985 cover electrical installations and utilization equipment installed or used within or on buildings, structures, and other premises including:

(i) Yards;

(ii) Carnivals;

(iii) Parking and other lots;

(iv) Mobile homes;

(v) Recreational vehicles;

(vi) Industrial substations under 750 volts. Chapter 296-45 WAC, Safety standards for electrical workers, shall apply to industrial substations of 750 volts or more;

(vii) Conductors that connect the installations to a supply of electricity; and

(viii) Other outside conductors on the premises.

(b) **Not covered.** The provisions of WAC 296-24-95603 through 296-24-985 do not cover:

(i) Installations in ships, watercraft, railway rolling stock, aircraft, or automotive vehicles other than mobile homes and recreational vehicles.

(ii) Installations underground in mines.

(iii) Installations of railways for generation, transformation, transmission, or distribution of power used exclusively for operation of rolling stock or installations used exclusively for signaling and communication purposes.

(iv) Installations of communication equipment under the exclusive control of communication utilities, located outdoors or in building spaces used exclusively for such installations.

(v) Installations under the exclusive control of electric utilities for the purpose of communication or metering; or for the generation, control, transformation, transmission, and distribution of electric energy located in buildings used exclusively by utilities for such purposes or located outdoors on property owned or leased by the utility or on public highways, streets, roads, etc., or outdoors by established rights on private property.

(2) **Extent of application.**

(a) The requirements contained in the sections listed below shall apply to all electrical installations and utilization equipment, regardless of when they were designed or installed:

Sections:		
WAC 296-24-95605	(2)	Examination, installation, and use of equipment.
" "	(3)	Splices.
" "	(4)	Arcing parts.
" "	(5)	Marking.
" "	(6)	Identification of disconnecting means.
" "	(7)(b)	Guarding of live parts.
WAC 296-24-95607	(5)(a)(i)	Protection of conductors and equipment.
" "	(5)(a)(iv)	Location in or on premises.
" "	(5)(a)(v)	Arcing or suddenly moving parts.
" "	(6)(a)(ii)	2-Wire DC systems to be grounded.
" "	(6)(a)(iii) and (iv)	AC systems to be grounded.
" "	(6)(a)(v)	AC systems 50 to 1000 volts not required to be grounded.
" "	(6)(c)	Grounding connections.
" "	(6)(d)	Grounding path.
WAC 296-24-95607	(6)(e)(iv) (A) through (D)	Fixed equipment required to be grounded.
" "	(6)(e)(v)	Grounding of equipment connected by cord and plug.
" "	(6)(e)(vi)	Grounding or nonelectrical equipment.
" "	(6)(f)(i)	Methods of grounding fixed equipment.
WAC 296-24-95609	(7)(a)(i) and (ii)	Flexible cords and cables, uses.
" "	(7)(a)(iii)	Flexible cords and cables prohibited.
" "	(7)(b)(ii)	Flexible cords and cables, splices.
" "	(7)(b)(iii)	Pull at joints and terminals of flexible cords and cables.
WAC 296-24-95613		Hazardous (classified) locations.

(b) Every electric utilization system and all utilization equipment installed after March 15, 1972, and every major replacement, modification, repair, or rehabilitation, after March 15, 1972, of any part of any electric utilization system or utilization equipment installed before March 15, 1972, shall comply with the provisions of WAC 296-24-956 through 296-24-985.

Note: "Major replacements, modifications, repairs, or rehabilitations" include work similar to that involved when a new building or facility is built, a new wing is added, or an entire floor is renovated.

(c) The following provisions apply to electric utilization systems and utilization equipment installed after April 16, 1981:

WAC 296-24-95605	(8)(d)(i) and (ii)	Entrance and access to work space (over 600 volts).
WAC 296-24-95607	(5) (a)(vi)(B)	Circuit breakers operated vertically.
" "	(5)(a)(vi)(C)	Circuit breakers used as switches.
" "	(6)(g)(ii)	Grounding of systems of 1000 volts or more supplying portable or mobile equipment.
WAC 296-24-95609	(10)(f)(ii)(B)	Switching series capacitors over 600 volts.
WAC 296-24-95611	(3)(b)	Warning signs for elevators and escalators.
" "	(9)	Electrically controlled irrigation machines.
" "	(10)(e)	Ground-fault circuit interrupters for fountains.
WAC 296-24-95615	(1)(a)(ii)	Physical protection of conductors over 600 volts.
" "	(3)(b)	Marking of Class 2 and Class 3 power supplies.
" "	(4)	Fire protective signaling circuits.

[Statutory Authority: RCW 49.17.010, 49.17.040, 49.17.050, and 49.17.-060. 04-07-161, § 296-24-95603, filed 3/23/04, effective 6/1/04. Statutory Authority: Chapter 49.17 RCW. 91-24-017 (Order 91-07), § 296-24-95603, filed 11/22/91, effective 12/24/91; 87-24-051 (Order 87-24), § 296-24-95603, filed 11/30/87. Statutory Authority: RCW 49.17.040 and 49.17.050. 82-08-026 (Order 82-10), § 296-24-95603, filed 3/30/82.]

WAC 296-24-95605 General requirements. (1) **Approval.** The conductors and equipment required or permitted by this section shall be acceptable only if approved.

(2) **Examination, installation, and use of equipment.**

(a) **Examination.** Electrical equipment shall be free from recognized hazards that are likely to cause death or serious physical harm to employees. Safety of equipment shall be determined using the following considerations:

(i) Suitability for installation and use in conformity with the provisions of this part. Suitability of equipment for an identified purpose may be evidenced by listing or labeling for that identified purpose.

(ii) Mechanical strength and durability, including, for parts designed to enclose and protect other equipment, the adequacy of the protection thus provided.

(iii) Electrical insulation.

(iv) Heating effects under conditions of use.

(v) Arcing effects.

(vi) Classification by type, size, voltage, current capacity, specific use.

(vii) Other factors which contribute to the practical safeguarding of employees using or likely to come in contact with the equipment.

(b) **Installation and use.** Listed or labeled equipment shall be used or installed in accordance with any instructions included in the listing or labeling.

(3) **Splices.** Conductors shall be spliced or joined with splicing devices suitable for the use or by brazing, welding, or soldering with a fusible metal or alloy. Soldered splices shall first be so spliced or joined as to be mechanically and electrically secure without solder and then soldered. All splices and joints and the free ends of conductors shall be covered with an insulation equivalent to that of the conductors or with an insulating device suitable for the purpose.

(4) **Arcing parts.** Parts of electric equipment which in ordinary operation produce arcs, sparks, flames, or molten metal shall be enclosed or separated and isolated from all combustible material.

(5) **Marking.** Electrical equipment may not be used unless the manufacturer's name, trademark, or other descriptive marking by which the organization responsible for the product may be identified is placed on the equipment. Other markings shall be provided giving voltage, current, wattage, or other ratings as necessary. The marking shall be of sufficient durability to withstand the environment involved.

(6) **Identification of disconnecting means and circuits.** Each disconnecting means required by this part for motors and appliances shall be legibly marked to indicate its purpose, unless located and arranged so the purpose is evident. Each service, feeder, and branch circuit, at its disconnecting means or overcurrent device, shall be legibly marked to indicate its purpose, unless located and arranged so the purpose is evident. These markings shall be of sufficient durability to withstand the environment involved.

(7) **600 volts, nominal, or less.**

(a) **Working space about electric equipment.** Sufficient access and working space shall be provided and maintained about all electric equipment to permit ready and safe operation and maintenance of such equipment.

(i) **Working clearances.** Except as required or permitted elsewhere in this chapter, the dimension of the working space in the direction of access to live parts operating at 600 volts or less and likely to require examination, adjustment, servicing, or maintenance while alive may not be less than indicated in Table S-1. In addition to the dimensions shown in Table S-1, workspace may not be less than 30 inches wide in front of the electric equipment. Distances shall be measured from the live parts if they are exposed, or from the enclosure front or opening if the live parts are enclosed. Concrete, brick, or tile walls are considered to be grounded. Working space is not required in back of assemblies such as dead-front switchboards or motor control centers where there are no renewable or adjustable parts such as fuses or switches on the back and where all connections are accessible from locations other than the back.

TABLE S-1—Working clearances

Nominal voltage to ground	Minimum clear distance for condition[2] (ft)		
	(*a*)	(*b*)	(*c*)
0-150	[1]3	[1]3	3
151-600	[1]3	3 1/2	4

[1] Minimum clear distances may be 2 feet 6 inches for installations built prior to effective date of this section.

[2] Conditions (*a,*) (*b*), (*c*). are as follows: (*a*) Exposed live parts on one side and no live or grounded parts on the other side of the working space, or exposed live parts on both sides effectively guarded by suitable wood or other insulating material. Insulated wire or insulated busbars operating at not over 300 volts are not considered live parts. (*b*) Exposed live parts on one side and grounded parts on the other side (*c*) Exposed live parts on both sides of the workspace (not guarded as provided in condition (*a*)) with the operator between.

(ii) **Clear spaces.** Working space required by this part may not be used for storage. When normally enclosed live parts are exposed for inspection or servicing, the working space, if in a passageway or general open space, shall be suitably guarded.

(iii) **Access and entrance to working space.** At least one entrance of sufficient area shall be provided to give access to the working space about electric equipment.

(iv) **Front working space.** Where there are live parts normally exposed on the front of switchboards or motor control centers, the working space in front of such equipment may not be less than 3 feet.

(v) **Illumination.** Illumination shall be provided for all working spaces about service equipment, switchboards, panelboards, and motor control centers installed indoors.

(vi) **Headroom.** The minimum headroom of working spaces about service equipment, switchboards, panelboards, or motor control centers shall be 6 feet 3 inches.

Note: As used in this section, a motor control center is an assembly of one or more enclosed sections having a common power bus and principally containing motor control units.

(b) **Guarding of live parts.**

(i) Except as required or permitted elsewhere in this section, live parts of electric equipment operating at 50 volts or more shall be guarded against accidental contact by approved cabinets or other forms of approved enclosures, or by any of the following means:

(A) By location in a room, vault, or similar enclosure that is accessible only to qualified persons.

(B) By suitable permanent, substantial partitions or screens so arranged that only qualified persons will have access to the space within reach of the live parts. Any openings in such partitions or screens shall be so sized and located that persons are not likely to come into accidental contact

with live parts or to bring conducting objects into contact with them.

(C) By location on a suitable balcony, gallery, or platform so elevated and arranged as to exclude unqualified persons.

(D) By elevation of 8 feet or more above the floor or other working surface.

(ii) In locations where electric equipment would be exposed to physical damage, enclosures or guards shall be so arranged and of such strength as to prevent such damage.

(iii) Entrances to rooms and other guarded locations containing exposed live parts shall be marked with conspicuous warning signs forbidding unqualified persons to enter.

(8) **Over 600 volts, nominal.**

(a) **General.** Conductors and equipment used on circuits exceeding 600 volts, nominal, shall comply with all applicable provisions of subsections (1) through (7) of this section and with the following provisions which supplement or modify those requirements. The provisions of (b), (c) and (d) of this subsection do not apply to equipment on the supply side of the service conductors.

(b) **Enclosure for electrical installations.** Electrical installations in a vault, room, closet or in an area surrounded by a wall, screen, or fence, access to which is controlled by lock and key or other approved means, are considered to be accessible to qualified persons only. A wall, screen, or fence less than 8 feet in height is not considered to prevent access unless it has other features that provide a degree of isolation equivalent to an 8 foot fence. The entrances to all buildings, rooms, or enclosures containing exposed live parts or exposed conductors operating at over 600 volts, nominal, shall be kept locked or shall be under the observation of a qualified person at all times.

(i) **Installations accessible to qualified persons only.** Electrical installations having exposed live parts shall be accessible to qualified persons only and shall comply with the applicable provisions of (c) of this subsection.

(ii) **Installations accessible to unqualified persons.** Electrical installations that are open to unqualified persons shall be made with metal-enclosed equipment or shall be enclosed in a vault or in an area, access to which is controlled by a lock. If metal-enclosed equipment is installed so that the bottom of the enclosure is less than 8 feet above the floor, the door or cover shall be kept locked. Metal-enclosed switchgear, unit substations, transformers, pull boxes, connection boxes, and other similar associated equipment shall be marked with appropriate caution signs. If equipment is exposed to physical damage from vehicular traffic, suitable guards shall be provided to prevent such damage. Ventilating or similar openings in metal-enclosed equipment shall be designed so that foreign objects inserted through these openings will be deflected from energized parts.

(c) **Workspace about equipment.** Sufficient space shall be provided and maintained about electric equipment to permit ready and safe operation and maintenance of such equipment. Where energized parts are exposed, the minimum clear workspace may not be less than 6 feet 6 inches high (measured vertically from the floor or platform), or less than 3 feet wide (measured parallel to the equipment). The depth shall be as required in Table S-2. The workspace shall be adequate to permit at least a 90-degree opening of doors or hinged panels.

(i) **Working space.** The minimum clear working space in front of electric equipment such as switchboards, control panels, switches, circuit breakers, motor controllers, relays, and similar equipment may not be less than specified in Table S-2 unless otherwise specified in this part. Distances shall be measured from the live parts if they are exposed, or from the enclosure front or opening if the live parts are enclosed. However, working space is not required in back of equipment such as deadfront switchboards or control assemblies where there are no renewable or adjustable parts (such as fuses or switches) on the back and where all connections are accessible from locations other than the back. Where rear access is required to work on deenergized parts on the back of enclosed equipment, a minimum working space of 30 inches horizontally shall be provided.

TABLE S-2—Minimum Depth of Clear Working Space in Front of Electric Equipment

Nominal voltage to ground	Conditions[2](ft)		
	(*a*)	(*b*)	(*c*)
601 to 2,500	3	4	5
2,501 to 9,000	4	5	6
9,001 to 25,000	5	6	9
25,001 to 75kV[1]	6	8	10
Above 75kV[1]	8	10	12

[1] Minimum depth of clear working space in front of electric equipment with a nominal voltage to ground above 25,000 volts may be the same as for 25,000 volts under conditions (*a*), (*b*) and (*c*) for installations built prior to April 16, 1981. (2) Conditions (*a*), (*b*) and (*c*) are as follows: (*a*) Exposed live parts on one side and no live or grounded parts on the other side of the working space, or exposed live parts on both sides effectively guarded by suitable wood or other insulating materials. Insulated wire or insulated busbars operating at not over 300 volts are not considered live parts. (*b*) Exposed live parts on one side and grounded parts on the other side. Concrete, brick, or tile walls will be considered as grounded surfaces. (*c*) Exposed live parts on both sides of the workspace not guarded as provided in condition (*a*) with the operator between.

(ii) **Illumination.** Adequate illumination shall be provided for all working spaces about electric equipment. The lighting outlets shall be so arranged that persons changing lamps or making repairs on the lighting system will not be endangered by live parts or other equipment. The points of control shall be so located that persons are not likely to come in contact with any live part or moving part of the equipment while turning on the lights.

(iii) **Elevation of unguarded live parts.** Unguarded live parts above working space shall be maintained at elevations not less than specified in Table S-3.

TABLE S-3—Elevation of Unguarded Energized Parts Above Working Space

Nominal voltage between phases	Minimum elevation
601 to 7,500	*8 feet 6 inches.
7,501 to 35,000	9 feet.
Over 35kV	9 feet+ 0.37 inches per kV above 35kV.

Note: Minimum elevation may be 8 feet 0 inches for installations built prior to April 16, 1981, if the nominal voltage between phases is in the range of 601-6600 volts.

(d) **Entrance and access to workspace.** (See WAC 296-24-95603 (2)(c).)

(i) At least one entrance not less than 24 inches wide and 6 feet 6 inches high shall be provided to give access to the working space about electric equipment. On switchboard and control panels exceeding 48 inches in width, there shall be one entrance at each end of such board where practicable. Where bare energized parts at any voltage or insulated energized parts above 600 volts are located adjacent to such entrance, they shall be suitably guarded.

(ii) Permanent ladders or stairways shall be provided to give safe access to the working space around electric equipment installed on platforms, balconies, mezzanine floors, or in attic or roof rooms or spaces.

[Statutory Authority: Chapter 49.17 RCW. 94-15-096 (Order 94-07), § 296-24-95605, filed 7/20/94, effective 9/20/94; 87-24-051 (Order 87-24), § 296-24-95605, filed 11/30/87. Statutory Authority: RCW 49.17.040 and 49.17.050. 82-08-026 (Order 82-10), § 296-24-95605, filed 3/30/82.]

WAC 296-24-95607 Wiring design and protection. (1) **Use and identification of grounded and grounding conductors.**

(a) **Identification of conductors.** A conductor used as a grounded conductor shall be identifiable and distinguishable from all other conductors. A conductor used as an equipment grounding conductor shall be identifiable and distinguishable from all other conductors.

(b) **Polarity of connections.** No grounded conductor may be attached to any terminal or lead so as to reverse designated polarity.

(c) **Use of grounding terminals and devices.** A grounding terminal or grounding-type device on a receptacle, cord connector, or attachment plug may not be used for purposes other than grounding.

(2) **Outlet devices.** Outlet devices shall have an ampere rating not less than the load to be served.

(3) **Outside conductors, 600 volts, nominal, or less.** Subdivisions (a), (b), (c) and (d) of this subsection apply to branch circuit, feeder, and service conductors rated 600 volts, nominal, or less and run outdoors as open conductors. Subdivision (e) of this subsection applies to lamps installed under such conductors.

(a) **Conductors on poles.** Conductors supported on poles shall provide a horizontal climbing space not less than the following:

(i) Power conductors below communication conductors—30 inches.

(ii) Power conductors alone or above communication conductors: 300 volts or less—24 inches; more than 300 volts—30 inches.

(iii) Communication conductors below power conductors with power conductors 300 volts or less—24 inches; more than 300 volts—30 inches.

(b) **Clearance from ground.** Open conductors shall conform to the following minimum clearances:

(i) 10 feet—Above finished grade, sidewalks, or from any platform or projection from which they might be reached.

(ii) 12 feet—Over areas subject to vehicular traffic other than truck traffic.

(iii) 15 feet—Over areas other than those specified in item (b)(iv) of this subsection that are subject to truck traffic.

(iv) 18 feet—Over public streets, alleys, roads, and driveways.

(c) **Clearance from building openings.** Conductors shall have a clearance of at least 3 feet from windows, doors, porches, fire escapes, or similar locations. Conductors run above the top level of a window are considered to be out of reach from that window and, therefore, do not have to be 3 feet away.

(d) **Clearance over roofs.** Conductors shall have a clearance of not less than 8 feet from the highest point of roofs over which they pass, except that:

(i) Where the voltage between conductors is 300 volts or less and the roof has a slope of not less than 4 inches in 12, the clearance from the roofs shall be at least 3 feet; or

(ii) Where the voltage between conductors is 300 volts or less and the conductors do not pass over more than 4 feet of the overhang portion of the roof and they are terminated at a through-the-roof raceway or approved support, the clearance from the roofs shall be at least 18 inches.

(e) **Location of outdoor lamps.** Lamps for outdoor lighting shall be located below all live conductors, transformers, or other electric equipment, unless such equipment is controlled by a disconnecting means that can be locked in the open position or unless adequate clearances or other safeguards are provided for relamping operations.

(4) **Services.**

(a) **Disconnecting means.**

(i) **General.** Means shall be provided to disconnect all conductors in a building or other structure from the service-entrance conductors. The disconnecting means shall plainly indicate whether it is in the open or closed position and shall be installed at a readily accessible location nearest the point of entrance of the service-entrance conductors.

(ii) **Simultaneous opening of poles.** Each service disconnecting means shall simultaneously disconnect all ungrounded conductors.

(b) **Services over 600 volts, nominal.** The following additional requirements apply to services over 600 volts, nominal.

(i) **Guarding.** Service-entrance conductors installed as open wires shall be guarded to make them accessible only to qualified persons.

(ii) **Warning signs.** Signs warning of high voltage shall be posted where other than qualified employees might come in contact with live parts.

(5) **Overcurrent protection.**

Over 600 volts, nominal. Feeders and branch circuits over 600 volts, nominal, shall have short-circuit protection.

(6) **Grounding.** Subdivisions (a) through (g) of this subsection contain grounding requirements for systems, circuits, and equipment.

(a) **Systems to be grounded.** The following systems which supply premises wiring shall be grounded:

(i) All 3-wire DC systems shall have their neutral conductor grounded.

(ii) Two-wire DC systems operating at over 50 volts through 300 volts between conductors shall be grounded unless:

(A) They supply only industrial equipment in limited areas and are equipped with a ground detector; or

(B) They are rectifier-derived from an AC system complying with items (a)(iii), (a)(iv), and (a)(v) of this subsection; or

(C) They are fire-protective signaling circuits having a maximum current of 0.030 amperes.

(iii) AC circuits of less than 50 volts shall be grounded if they are installed as overhead conductors outside of buildings or if they are supplied by transformers and the transformer primary supply system is ungrounded or exceeds 150 volts to ground.

(iv) AC systems of 50 volts to 1000 volts shall be grounded under any of the following conditions, unless exempted by item (a)(v) of this subsection:

(A) If the system can be so grounded that the maximum voltage to ground on the ungrounded conductors does not exceed 150 volts;

(B) If the system is nominally rated 480Y/277 volt, 3-phase, 4-wire in which the neutral is used as a circuit conductor;

(C) If the system is nominally rated 240/120 volt, 3-phase, 4-wire in which the midpoint of one phase is used as a circuit conductor; or

(D) If a service conductor is uninsulated.

(v) AC systems of 50 volts to 1000 volts are not required to be grounded under any of the following conditions:

(A) If the system is used exclusively to supply industrial electric furnaces for melting, refining, tempering, and the like.

(B) If the system is separately derived and is used exclusively for rectifiers supplying only adjustable speed industrial drives.

(C) If the system is separately derived and is supplied by a transformer that has a primary voltage rating less than 1000 volts, provided all of the following conditions are met:

(I) The system is used exclusively for control circuits;

(II) The conditions of maintenance and supervision assure that only qualified persons will service the installation;

(III) Continuity of control power is required; and

(IV) Ground detectors are installed on the control system.

(D) If the system is an isolated power system that supplies circuits in health care facilities.

(b) **Conductors to be grounded.** For AC premises wiring systems the identified conductor shall be grounded.

(c) **Grounding connections.**

(i) For a grounded system, a grounding electrode conductor shall be used to connect both the equipment grounding conductor and the grounded circuit conductor to the grounding electrode. Both the equipment grounding conductor and the grounding electrode conductor shall be connected to the grounded circuit conductor on the supply side of the service disconnecting means, or on the supply side of the system disconnecting means or overcurrent devices if the system is separately derived.

(ii) For an ungrounded service-supplied system, the equipment grounding conductor shall be connected to the grounding electrode conductor at the service equipment. For an ungrounded separately derived system, the equipment grounding conductor shall be connected to the grounding electrode conductor at, or ahead of, the system disconnecting means or overcurrent devices.

(iii) On extensions of existing branch circuits which do not have an equipment grounding conductor, grounding-type receptacles may be grounded to a grounded cold water pipe near the equipment.

(d) **Grounding path.** The path to ground from circuits, equipment, and enclosures shall be permanent and continuous.

(e) **Supports, enclosures, and equipment to be grounded.**

(i) **Supports and enclosures for conductors.** Metal cable trays, metal raceways, and metal enclosures for conductors shall be grounded, except that:

(A) Metal enclosures such as sleeves that are used to protect cable assemblies from physical damage need not be grounded; or

(B) Metal enclosures for conductors added to existing installations of open wire, knob-and-tube wiring, and nonmetallic-sheathed cable need not be grounded if all of the following conditions are met:

(I) Runs are less than 25 feet;

(II) Enclosures are free from probable contact with ground, grounded metal, metal laths, or other conductive materials; and

(III) Enclosures are guarded against employee contact.

(ii) **Service equipment enclosures.** Metal enclosures for service equipment shall be grounded.

(iii) **Frames of ranges and clothes dryers.** Frames of electric ranges, wall-mounted ovens, counter-mounted cooking units, clothes dryers, and metal outlet or junction boxes which are part of the circuit for these appliances shall be grounded.

(iv) **Fixed equipment.** Exposed noncurrent-carrying metal parts of fixed equipment which may become energized shall be grounded under any of the following conditions:

(A) If within 8 feet vertically or 5 feet horizontally of ground or grounded metal objects and subject to employee contact.

(B) If located in a wet or damp location and not isolated.

(C) If in electrical contact with metal.

(D) If in a hazardous (classified) location.

(E) If supplied by a metal-clad, metal-sheathed, or grounded metal raceway wiring method.

(F) If equipment operates with any terminal at over 150 volts to the ground; however, the following need not be grounded:

(I) Enclosures for switches or circuit breakers used for other than service equipment and accessible to qualified persons only;

(II) Metal frames of electrically heated appliances which are permanently and effectively insulated from ground; and

(III) The cases of distribution apparatus such as transformers and capacitors mounted on wooden poles at a height exceeding 8 feet above ground or grade level.

(v) **Equipment connected by cord and plug.** Under any of the conditions described in subitems (e)(v)(A) through (e)(v)(C) of this subsection, exposed noncurrent-carrying metal parts of cord-connected and plug-connected equipment which may become energized shall be grounded.

(A) If in hazardous (classified) locations (see WAC 296-24-95613).

(B) If operated at over 150 volts to ground, except for guarded motors and metal frames of electrically heated appli-

ances if the appliance frames are permanently and effectively insulated from ground.

(C) If the equipment is of the following types:

(I) Refrigerators, freezers, and air conditioners;

(II) Clothes-washing, clothes-drying and dishwashing machines, sump pumps, and electrical aquarium equipment;

(III) Hand-held motor-operated tools;

(IV) Motor-operated appliances of the following types: Hedge clippers, lawn mowers, snow blowers, and wet scrubbers;

(V) Cord-connected and plug-connected appliances used in damp or wet locations or by employees standing on the ground or on metal floors or working inside of metal tanks or boilers;

(VI) Portable and mobile X-ray and associated equipment;

(VII) Tools likely to be used in wet and conductive locations; and

(VIII) Portable hand lamps. Tools likely to be used in wet and conductive locations need not be grounded if supplied through an isolating transformer with an ungrounded secondary of not over 50 volts. Listed or labeled portable tools and appliances protected by an approved system of double insulation, or its equivalent, need not be grounded. If such a system is employed, the equipment shall be distinctively marked to indicate that the tool or appliance utilizes an approved system of double insulation.

(vi) **Nonelectrical equipment.** The metal parts of the following nonelectrical equipment shall be grounded: Frames and tracks of electrically operated cranes; frames of nonelectrically driven elevator cars to which electric conductors are attached; hand operated metal shifting ropes or cables of electric elevators, and metal partitions, grill work, and similar metal enclosures around equipment of over 750 volts between conductors.

(f) **Methods of grounding fixed equipment.**

(i) Noncurrent-carrying metal parts of fixed equipment, if required to be grounded by this section, shall be grounded by an equipment grounding conductor which is contained within the same raceway, cable, or cord, or runs with or encloses the circuit conductors. For DC circuits only, the equipment grounding conductor may be run separately from the circuit conductors.

(ii) Electric equipment is considered to be effectively grounded if it is secured to, and in electrical contact with, a metal rack or structure that is provided for its support and the metal rack or structure is grounded by the method specified for the noncurrent-carrying metal parts of fixed equipment in item (f)(i) of this subsection. For installations made before May 30, 1982, only, electric equipment is also considered to be effectively grounded if it is secured to, and in metallic contact with, the grounded structural metal frame of a building. Metal car frames supported by metal hoisting cables attached to or running over metal sheaves or drums of grounded elevator machines are also considered to be effectively grounded.

(g) **Grounding of systems and circuits of 1000 volts and over (high voltage).**

(i) **General.** If high voltage systems are grounded, they shall comply with all applicable provisions of subdivisions (a) through (f) of this subsection as supplemented and modified by the subdivision (g) of this subsection.

(ii) **Grounding of systems supplying portable or mobile equipment.** (See WAC 296-24-95603 (2)(c) and 296-800-280.) Systems supplying portable or mobile high voltage equipment, other than substations installed on a temporary basis, shall comply with the following:

(A) Portable and mobile high voltage equipment shall be supplied from a system having its neutral grounded through an impedance. If a delta-connected high voltage system is used to supply the equipment, a system neutral shall be derived.

(B) Exposed noncurrent-carrying metal parts of portable and mobile equipment shall be connected by an equipment grounding conductor to the point at which the system neutral impedance is grounded.

(C) Ground-fault detection and relaying shall be provided to automatically deenergize any high voltage system component which has developed a ground fault. The continuity of the equipment grounding conductor shall be continuously monitored so as to deenergize automatically the high voltage feeder to the portable equipment upon loss of continuity of the equipment grounding conductor.

(D) The grounding electrode to which the portable or mobile equipment system neutral impedance is connected shall be isolated from and separated in the ground by at least 20 feet from any other system or equipment grounding electrode, and there shall be no direct connection between the grounding electrodes, such as buried pipe, fence, etc.

(iii) **Grounding of equipment.** All noncurrent-carrying metal parts of portable equipment and fixed equipment including their associated fences, housings, enclosures, and supporting structures shall be grounded. However, equipment which is guarded by location and isolated from ground need not be grounded. Additionally, pole-mounted distribution apparatus at a height exceeding 8 feet above ground or grade level need not be grounded.

[Statutory Authority: RCW 49.17.010, [49.17].040, and [49.17].050. 01-11-038, § 296-24-95607, filed 5/9/01, effective 9/1/01. Statutory Authority: Chapter 49.17 RCW. 91-24-017 (Order 91-07), § 296-24-95607, filed 11/22/91, effective 12/24/91; 87-24-051 (Order 87-24), § 296-24-95607, filed 11/30/87. Statutory Authority: RCW 49.17.040 and 49.17.050. 82-08-026 (Order 82-10), § 296-24-95607, filed 3/30/82.]

WAC 296-24-95609 Wiring methods, components, and equipment for general use. (1) **Wiring methods.** The provisions of this section do not apply to the conductors that are an integral part of factory-assembled equipment.

(a) **General requirements.**

(i) **Electrical continuity of metal raceways and enclosures.** Metal raceways, cable armor, and other metal enclosures for conductors shall be metallically joined together into a continuous electric conductor and shall be so connected to all boxes, fittings, and cabinets as to provide effective electrical continuity.

(ii) **Wiring in ducts.** No wiring systems of any type shall be installed in ducts used to transport dust, loose stock or flammable vapors. No wiring system of any type may be installed in any duct used for vapor removal or for ventilation of commercial-type cooking equipment, or in any shaft containing only such ducts.

(b) **Temporary wiring.** Temporary electrical power and lighting wiring methods may be of a class less than would be

required for a permanent installation. Except as specifically modified in this section, all other requirements of this part for permanent wiring shall apply to temporary wiring installations.

(i) **Uses permitted, 600 volts, nominal or less.** Temporary electrical power and lighting installations 600 volts, nominal, or less may be used only:

(A) During and for remodeling, maintenance, repair, or demolition of buildings, structures, or equipment, and similar activities;

(B) For experimental or development work; and

(C) For a period not to exceed 90 days for Christmas decorative lighting, carnivals, and similar purposes.

(ii) **Uses permitted, over 600 volts, nominal.** Temporary wiring over 600 volts, nominal, may be used only during periods of tests, experiments, or emergencies.

(iii) **General requirements for temporary wiring.**

(A) Feeders shall originate in an approved distribution center. The conductors shall be run as multiconductor cord or cable assemblies, or, where not subject to physical damage, they may be run as open conductors on insulators not more than 10 feet apart.

(B) Branch circuits shall originate in an approved power outlet or panelboard. Conductors shall be multiconductor cord or cable assemblies or open conductors. If run as open conductors they shall be fastened at ceiling height every 10 feet. No branch-circuit conductor may be laid on the floor. Each branch circuit that supplies receptacles or fixed equipment shall contain a separate equipment grounding conductor if run as open conductors.

(C) Receptacles shall be of the grounding type. Unless installed in a complete metallic raceway, each branch circuit shall contain a separate equipment grounding conductor and all receptacles shall be electrically connected to the grounding conductor.

(D) No bare conductors nor earth returns may be used for the wiring of any temporary circuit.

(E) Suitable disconnecting switches or plug connectors shall be installed to permit the disconnection of all ungrounded conductors of each temporary circuit.

(F) Lamps for general illumination shall be protected from accidental contact or breakage. Protection shall be provided by elevation of at least 7 feet from normal working surface or by a suitable fixture or lampholder with a guard.

(G) Flexible cords and cables shall be protected from accidental damage. Sharp corners and projections shall be avoided. Where passing through doorways or other pinch points, flexible cords and cables shall be provided with protection to avoid damage.

(c) **Cable trays.**

(i) **Uses permitted.**

(A) Only the following may be installed in cable tray systems:

(I) Mineral-insulated metal-sheathed cable (Type MI);

(II) Armored cable (Type AC);

(III) Metal-clad cable (Type MC);

(IV) Power-limited tray cable (Type PLTC);

(V) Nonmetallic-sheathed cable (Type NM or NMC);

(VI) Shielded nonmetallic-sheathed cable (Type SNM);

(VII) Multiconductor service-entrance cable (Type SE or USE);

(VIII) Multiconductor underground feeder and branch-circuit cable (Type UF);

(IX) Power and control tray cable (Type TC);

(X) Other factory-assembled, multiconductor control, signal, or power cables which are specifically approved for installation in cable trays; or

(XI) Any approved conduit or raceway with its contained conductors.

(B) In industrial establishments only, where conditions of maintenance and supervision assure that only qualified persons will service the installed cable tray system, the following cables may also be installed in ladder, ventilated trough, or 4 inch ventilated channel-type cable trays:

(I) Single conductor cables which are 250 MCM or larger and are Types RHH, RHW, MV, USE, or THW, and other 250 MCM or larger single conductor cables if specifically approved for installation in cable trays. Where exposed to direct rays of the sun, cables shall be sunlight-resistant.

(II) Type MV cables, where exposed to direct rays of the sun, shall be sunlight-resistant.

(C) Cable trays in hazardous (classified) locations shall contain only the cable types permitted in such locations.

(ii) **Uses not permitted.** Cable tray systems may not be used in hoistways or where subjected to severe physical damage.

(d) **Open wiring on insulators.**

(i) **Uses permitted.** Open wiring on insulators is only permitted on systems of 600 volts, nominal, or less for industrial or agricultural establishments and for services.

(ii) **Conductor supports.** Conductors shall be rigidly supported on noncombustible, nonabsorbent insulating materials and may not contact any other objects.

(iii) **Flexible nonmetallic tubing.** In dry locations where not exposed to severe physical damage, conductors may be separately enclosed in flexible nonmetallic tubing. The tubing shall be in continuous lengths not exceeding 15 feet and secured to the surface by straps at intervals not exceeding 4 feet 6 inches.

(iv) **Through walls, floors, wood cross members, etc.** Open conductors shall be separated from contact with walls, floors, and wood cross members, or partitions through which they pass by tubes or bushings of noncombustible, nonabsorbent insulating material. If the bushing is shorter than the hole, a waterproof sleeve of nonconductive material shall be inserted in the hole and an insulating bushing slipped into the sleeve at each end in such a manner as to keep the conductors absolutely out of contact with the sleeve. Each conductor shall be carried through a separate tube or sleeve.

(v) **Protection from physical damage.** Conductors within 7 feet from the floor are considered exposed to physical damage. Where open conductors cross ceiling joints and wall studs and are exposed to physical damage, they shall be protected.

(2) **Cabinets, boxes, and fittings.**

(a) **Conductors entering boxes, cabinets, or fittings.** Conductors entering boxes, cabinets, or fittings shall be protected from abrasion, and openings through which conductors enter shall be effectively closed. Unused openings in cabinets, boxes, and fittings shall also be effectively closed.

(b) **Covers and canopies.** All pull boxes, junction boxes, and fittings shall be provided with covers approved for

the purpose. If metal covers are used they shall be grounded. In completed installations each outlet box shall have a cover, faceplate, or fixture canopy. Covers of outlet boxes having holes through which flexible cord pendants pass shall be provided with bushings designed for the purpose or shall have smooth, well-rounded surfaces on which the cords may bear.

(c) **Pull and junction boxes for systems over 600 volts, nominal.** In addition to other requirements in this section for pull and junction boxes, the following shall apply to these boxes for systems over 600 volts, nominal:

(i) Boxes shall provide a complete enclosure for the contained conductors or cables.

(ii) Boxes shall be closed by suitable covers securely fastened in place. Underground box covers that weight over 100 pounds meet this requirement. Covers for boxes shall be permanently marked "HIGH VOLTAGE." The marking shall be on the outside of the box cover and shall be readily visible and legible.

(3) **Switches.**

(a) **Knife switches.** Single-throw knife switches shall be so connected that the blades are dead when the switch is in the open position. Single-throw knife switches shall be so placed that gravity will not tend to close them. Single-throw knife switches approved for use in the inverted position shall be provided with a locking device that will ensure that the blades remain in the open position when so set. Double-throw knife switches may be mounted so that the throw will be either vertical or horizontal. However, if the throw is vertical a locking device shall be provided to ensure that the blades remain in the open position when so set.

(b) **Faceplates for flush-mounted snap switches.** Flush snap switches that are mounted in ungrounded metal boxes and located within reach of conducting floors or other conducting surfaces shall be provided with faceplates of nonconducting, noncombustible material.

(4) **Switchboards and panelboards.** Switchboards that have any exposed live parts shall be located in permanently dry locations and accessible only to qualified persons. Panelboards shall be mounted in cabinets, cutout boxes, or enclosures approved for the purpose and shall be dead front. However, panelboards other than the dead front externally-operable type are permitted where accessible only to qualified persons. Exposed blades of knife switches shall be dead when open.

(5) **Enclosures for damp or wet locations.**

(a) Cabinets, cutout boxes, fittings, boxes, and panelboard enclosures in damp or wet locations shall be installed so as to prevent moisture or water from entering and accumulating within the enclosures. In wet locations the enclosures shall be weatherproof.

(b) Switches, circuit breakers, and switchboards installed in wet locations shall be enclosed in weatherproof enclosures.

(6) **Conductors for general wiring.** All conductors used for general wiring shall be insulated unless otherwise permitted in this section. The conductor insulation shall be of a type that is approved for the voltage, operating temperature, and location of use. Insulated conductors shall be distinguishable by appropriate color or other suitable means as being grounded conductors, ungrounded conductors, or equipment grounding conductors.

(7) **Flexible cords and cables.**

(a) **Use of flexible cords and cables.**

(i) Flexible cords and cables shall be approved and suitable for conditions of use and location. Flexible cords and cables shall be used only for:

(A) Pendants;

(B) Wiring of fixtures;

(C) Connection of portable lamps or appliances;

(D) Elevator cables;

(E) Wiring of cranes and hoists;

(F) Connection of stationary equipment to facilitate their frequent interchange;

(G) Prevention of the transmission of noise or vibration;

(H) Appliances where the fastening means and mechanical connections are designed to permit removal for maintenance and repair; or

(I) Data processing cables approved as a part of the data processing system.

(ii) If used as permitted in subitem (a)(i)(C), (a)(i)(F) or (a)(i)(H) of this subsection, the flexible cord shall be equipped with an attachment plug and shall be energized from an approved receptacle outlet.

(iii) Unless specifically permitted in item (a)(i) of this subsection, flexible cords and cables may not be used:

(A) As a substitute for the fixed wiring of a structure;

(B) Where run through holes in walls, ceilings, or floors;

(C) Where run through doorways, windows, or similar openings;

(D) Where attached to building surfaces; or

(E) Where concealed behind building walls, ceilings, or floors.

(iv) Flexible cords used in show windows and showcases shall be Type S, SO, SJ, SJO, ST, STO, SJT, SJTO, or AFS except for the wiring of chain-supported lighting fixtures and supply cords for portable lamps and other merchandise being displayed or exhibited.

(b) **Identification, splices, and terminations.**

(i) A conductor of a flexible cord or cable that is used as a grounded conductor or an equipment grounding conductor shall be distinguishable from other conductors. Types SJ, SJO, SJT, SJTO, S, SO, ST, and STO shall be durably marked on the surface with the type designation, size, and number of conductors.

(ii) Flexible cords shall be used only in continuous lengths without splice or tap. Hard service flexible cords No. 12 or larger may be repaired if spliced so that the splice retains the insulation, outer sheath properties, and usage characteristics of the cord being spliced.

(iii) Flexible cords shall be connected to devices and fittings so that strain relief is provided which will prevent pull from being directly transmitted to joints or terminal screws.

(8) **Portable cables over 600 volts, nominal.** Multiconductor portable cable for use in supplying power to portable or mobile equipment at over 600 volts, nominal, shall consist of No. 8 or larger conductors employing flexible stranding. Cables operated at over 2,000 volts shall be shielded for the purpose of confining the voltage stresses to the insulation. Grounding conductors shall be provided. Connectors for these cables shall be of a locking type with provisions to prevent their opening or closing while energized. Strain relief shall be provided at connections and terminations. Portable

cables may not be operated with splices unless the splices are of the permanent molded, vulcanized, or other approved type. Termination enclosures shall be suitably marked with a high voltage hazard warning, and terminations shall be accessible only to authorized and qualified personnel.

(9) **Fixture wires.**

(a) **General.** Fixture wires shall be approved for the voltage, temperature, and location of use. A fixture wire which is used as a grounded conductor shall be identified.

(b) **Uses permitted.** Fixture wires may be used:

(i) For installation in lighting fixtures and in similar equipment where enclosed or protected and not subject to bending or twisting in use; or

(ii) For connecting lighting fixtures to the branch-circuit conductors supplying the fixtures.

(c) **Uses not permitted.** Fixture wires may not be used as branch-circuit conductors except as permitted for Class 1 power limited circuits.

(10) **Equipment for general use.**

(a) **Lighting fixtures, lampholders, lamps, and receptacles.**

(i) Fixtures, lampholders, lamps, rosettes, and receptacles may have no live parts normally exposed to employee contact. However, rosettes and cleat-type lampholders and receptacles located at least 8 feet above the floor may have exposed parts.

(ii) Handlamps of the portable type supplied through flexible cords shall be equipped with a handle of molded composition or other material approved for the purpose, and a substantial guard shall be attached to the lampholder or the handle.

(iii) Lampholders of the screw-shell type shall be installed for use as lampholders only. Lampholders installed in wet or damp locations shall be of the weatherproof type.

(iv) Fixtures installed in wet or damp locations shall be approved for the purpose and shall be so constructed or installed that water cannot enter or accumulate in wireways, lampholders, or other electrical parts.

(b) **Receptacles, cord connectors, and attachment plugs (caps).**

(i) Receptacles, cord connectors, and attachment plugs shall be constructed so that no receptacle or cord connector will accept an attachment plug with a different voltage or current rating than that for which the device is intended. However, a 20-ampere T-slot receptacle or cord connector may accept a 15-ampere attachment plug of the same voltage rating.

(ii) A receptacle installed in a wet or damp location shall be suitable for the location.

(c) **Appliances.**

(i) Appliances, other than those in which the current-carrying parts at high temperatures are necessarily exposed, may have no live parts normally exposed to employee contact.

(ii) A means shall be provided to disconnect each appliance.

(iii) Each appliance shall be marked with its rating in volts and amperes or volts and watts.

(d) **Motors.** This subdivision applies to motors, motor circuits, and controllers.

(i) **In sight from.** If specified that one piece of equipment shall be "in sight from" another piece of equipment, one shall be visible and not more than 50 feet from the other.

(ii) **Disconnecting means.**

(A) A disconnecting means shall be located in sight from the controller location. However, a single disconnecting means may be located adjacent to a group of coordinated controllers mounted adjacent to each other or a multimotor continuous process machine. The controller disconnecting means for motor branch circuits over 600 volts, nominal, may be out of sight of the controller, if the controller is marked with a warning label giving the location and identification of the disconnecting means which is to be locked in the open position.

(B) The disconnecting means shall disconnect the motor and the controller from all ungrounded supply conductors and shall be so designed that no pole can be operated independently.

(C) If a motor and the driven machinery are not in sight from the controller location, the installation shall comply with one of the following conditions:

(I) The controller disconnecting means shall be capable of being locked in the open position.

(II) A manually operable switch that will disconnect the motor from its source of supply shall be placed in sight from the motor location.

(D) The disconnecting means shall plainly indicate whether it is in the open (off) or closed (on) position.

(E) The disconnecting means shall be readily accessible. If more than one disconnect is provided for the same equipment, only one need be readily accessible.

(F) An individual disconnecting means shall be provided for each motor, but a single disconnecting means may be used for a group of motors under any one of the following conditions:

(I) If a number of motors drive special parts of a single machine or piece of apparatus, such as a metal or woodworking machine, crane, or hoist;

(II) If a group of motors is under the protection of one set of branch-circuit protective devices; or

(III) If a group of motors is in a single room in sight from the location of the disconnecting means.

(iii) **Motor overload, short-circuit, and ground-fault protection.** Motors, motor-control apparatus, and motor branch-circuit conductors shall be protected against overheating due to motor overloads or failure to start, and against short-circuits or ground faults. These provisions shall not require overload protection that will stop a motor where a shutdown is likely to introduce additional or increased hazards, as in the case of fire pumps, or where continued operation of a motor is necessary for a safe shutdown of equipment or process and motor overload sensing devices are connected to a supervised alarm.

(iv) **Protection of live parts—all voltages.**

(A) Stationary motors having commutators, collectors, and brush rigging located inside of motor end brackets and not conductively connected to supply circuits operating at more than 150 volts to ground need not have such parts guarded. Exposed live parts of motors and controllers operating at 50 volts or more between terminals shall be guarded against accidental contact by any of the following:

(I) By installation in a room or enclosure that is accessible only to qualified persons;

(II) By installation on a suitable balcony, gallery, or platform, so elevated and arranged as to exclude unqualified persons; or

(III) By elevation 8 feet or more above the floor.

(B) Where live parts of motors or controllers operating at over 150 volts to ground are guarded against accidental contact only by location, and where adjustment or other attendance may be necessary during the operation of the apparatus, suitable insulating mats or platforms shall be provided so that the attendant cannot readily touch live parts unless standing on the mats or platforms.

(e) **Transformers.**

(i) The following items cover the installation of all transformers except the following:

(A) Current transformers;

(B) Dry-type transformers installed as a component part of other apparatus;

(C) Transformers which are an integral part of an X-ray, high frequency, or electrostatic-coating apparatus;

(D) Transformers used with Class 2 and Class 3 circuits, sign and outline lighting, electric discharge lighting, and power-limited fire-protective signalling circuits; and

(E) Liquid-filled or dry-type transformers used for research, development, or testing, where effective safeguard arrangements are provided.

(ii) The operating voltage of exposed live parts of transformer installations shall be indicated by warning signs or visible markings on the equipment or structure.

(iii) Dry-type, high fire point liquid-insulated, and askarel-insulated transformers installed indoors and rated over 35kV shall be in a vault.

(iv) If they present a fire hazard to employees, oil-insulated transformers installed indoors shall be in a vault.

(v) Combustible material, combustible buildings and parts of buildings, fire escapes, and door and window openings shall be safeguarded from fires which may originate in oil-insulated transformers attached to or adjacent to a building or combustible material.

(vi) Transformer vaults shall be constructed so as to contain fire and combustible liquids within the vault and to prevent unauthorized access. Locks and latches shall be so arranged that a vault door can be readily opened from the inside.

(vii) Any pipe or duct system foreign to the vault installation may not enter or pass through a transformer vault.

(viii) Materials may not be stored in transformer vaults.

(f) **Capacitors.**

(i) All capacitors, except surge capacitors or capacitors included as a component part of other apparatus, shall be provided with an automatic means of draining the stored charge after the capacitor is disconnected from its source of supply.

(ii) Capacitors rated over 600 volts, nominal, shall comply with the following additional requirements:

(A) Isolating or disconnecting switches (with no interrupting rating) shall be interlocked with the load interrupting device or shall be provided with prominently displayed caution signs to prevent switching load current.

(B) For series capacitors (see WAC 296-24-95603 (2)(c)), the proper switching shall be assured by use of at least one of the following:

(I) Mechanically sequenced isolating and bypass switches;

(II) Interlocks; or

(III) Switching procedure prominently displayed at the switching location.

(g) **Storage batteries.** Provisions shall be made for sufficient diffusion and ventilation of gases from storage batteries to prevent the accumulation of explosive mixtures.

[Statutory Authority: Chapter 49.17 RCW. 94-15-096 (Order 94-07), § 296-24-95609, filed 7/20/94, effective 9/20/94; 87-24-051 (Order 87-24), § 296-24-95609, filed 11/30/87. Statutory Authority: RCW 49.17.040 and 49.17.050. 82-08-026 (Order 82-10), § 296-24-95609, filed 3/30/82.]

WAC 296-24-95611 Specific purpose equipment and installations. (1) **Electric signs and outline lighting.**

(a) **Disconnecting means.** Signs operated by electronic or electromechanical controllers located outside the sign shall have a disconnecting means located inside the controller enclosure or within sight of the controller location, and it shall be capable of being locked in the open position. Such disconnecting means shall have no pole that can be operated independently, and it shall open all ungrounded conductors that supply the controller and sign. All other signs, except the portable type, and all outline lighting installations shall have an externally operable disconnecting means which can open all ungrounded conductors and is within the sight of the sign or outline lighting it controls.

(b) Doors or covers giving access to uninsulated parts of indoor signs or outline lighting exceeding 600 volts and accessible to other than qualified persons shall either be provided with interlock switches to disconnect the primary circuit or shall be so fastened that the use of other than ordinary tools will be necessary to open them.

(2) **Cranes and hoists.** This subsection applies to the installation of electric equipment and wiring used in connection with cranes, monorail hoists, hoists, and all runways.

(a) **Disconnecting means.**

(i) A readily accessible disconnecting means shall be provided between the runway contact conductors and the power supply.

(ii) Another disconnecting means, capable of being locked in the open position, shall be provided in the leads from the runway contact conductors or other power supply on any crane or monorail hoist.

(A) If this additional disconnection means is not readily accessible from the crane or monorail hoist operating station means shall be provided at the operating station, to open the power circuit to all motors of the crane or monorail hoist.

(B) The additional disconnect may be omitted if a monorail hoist or hand-propelled crane bridge installation meets all of the following:

(I) The unit is floor controlled;

(II) The unit is within view of the power supply disconnecting means; and

(III) No fixed work platform has been provided for servicing the unit.

(b) **Control.** A limit switch or other device shall be provided to prevent the load block from passing the safe upper limit of travel of any hoisting mechanism.

(c) **Clearance.** The dimension of the working space in the direction of access to live parts which may require examination, adjustment, servicing, or maintenance while alive shall be a minimum of 2 feet 6 inches. Where controls are enclosed in cabinets, the door(s) shall either open at least 90 degrees or be removable.

(3) **Elevators, dumbwaiters, escalators, and moving walks.**

(a) **Disconnecting means.** Elevators, dumbwaiters, escalators, and moving walks shall have a single means for disconnecting all ungrounded main power supply conductors for each unit.

(b) **Warning signs.** If interconnections between control panels are necessary for operation of the system on a multicar installation that remains energized from a source other than the disconnecting means, a warning sign shall be mounted on or adjacent to the disconnecting means. The sign shall be clearly legible and shall read "Warning—Parts of the control panel are not de-energized by this switch." (See WAC 296-24-95603 (2)(c).)

(c) **Control panels.** If control panels are not located in the same space as the drive machine, they shall be located in cabinets with doors or panels capable of being locked closed.

(4) **Electric welders—disconnecting means.**

(a) A disconnecting means shall be provided in the supply circuit for each motor-generator arc welder, and for each AC transformer and DC rectifier arc welder which is not equipped with a disconnect mounted as an integral part of the welder.

(b) A switch or circuit breaker shall be provided by which each resistance welder and its control equipment can be isolated from the supply circuit. The ampere rating of this disconnecting means may not be less than the supply conductor ampacity.

(5) **Data processing systems—disconnecting means.** A disconnecting means shall be provided to disconnect the power to all electronic equipment in data processing or computer rooms. This disconnecting means shall be controlled from locations readily accessible to the operator at the principal exit doors. There shall also be a similar disconnecting means to disconnect the air conditioning system serving this area.

(6) **X-ray equipment.** This subsection applies to X-ray equipment for other than medical or dental use.

(a) **Disconnecting means.**

(i) A disconnecting means shall be provided in the supply circuit. The disconnecting means shall be operable from a location readily accessible from the X-ray control. For equipment connected to a 120-volt branch circuit of 30 amperes or less, a grounding-type attachment plug cap and receptacle of proper rating may serve as a disconnecting means.

(ii) If more than one piece of equipment is operated from the same high-voltage circuit, each piece or each group of equipment as a unit shall be provided with a high-voltage switch or equivalent disconnecting means. This disconnecting means shall be constructed, enclosed, or located so as to avoid contact by employees with its live parts.

(b) **Control.**

(i) **Radiographic and fluoroscopic types.** Radiographic and fluoroscopic-type equipment shall be effectively enclosed or shall have interlocks that de-energize the equipment automatically to prevent ready access to live current-carrying parts.

(ii) **Diffraction and irradiation types.** Diffraction-type and irradiation-type equipment shall be provided with a means to indicate when it is energized unless the equipment or installation is effectively enclosed or is provided with interlocks to prevent access to live current-carrying parts during operation.

(7) **Induction and dielectric heating equipment.**

(a) **Scope.** Subdivisions (b) and (c) of this subsection cover induction and dielectric heating equipment and accessories for industrial and scientific applications, but not for medical dental applications or for appliances.

(b) **Guarding and grounding.**

(i) **Enclosures.** The converting apparatus (including the DC line) and high-frequency electric circuits (excluding the output circuits and remote-control circuits) shall be completely contained within enclosures of noncombustible material.

(ii) **Panel controls.** All panel controls shall be of dead-front construction.

(iii) **Access to internal equipment.** Where doors are used for access to voltages from 500 to 1000 volts AC or DC, either door locks or interlocks shall be provided. Where doors are used for access to voltages of over 1000 volts AC or DC, either mechanical lockouts with a disconnecting means to prevent access until voltage is removed from the cubicle, or both door interlocking and mechanical door locks, shall be provided.

(iv) **Warning labels.** "Danger" labels shall be attached on the equipment and shall be plainly visible even when doors are open or panels are removed from compartments containing voltages of over 250 volts AC or DC.

(v) **Work applicator shielding.** Protective cages or adequate shielding shall be used to guard work applicators other than induction heating coils. Induction heating coils shall be protected by insulation and/or refractory materials. Interlock switches shall be used on all hinged access doors, sliding panels, or other such means of access to the applicator. Interlock switches shall be connected in such a manner as to remove all power from the applicator when any one of the access doors or panels is open. Interlocks on access doors or panels are not required if the applicator is an induction heating coil at DC ground potential or operating at less than 150 volts AC.

(vi) **Disconnecting means.** A readily accessible disconnecting means shall be provided by which each unit of heating equipment can be isolated from its supply circuit.

(c) **Remote control.** If remote controls are used for applying power, a selector switch shall be provided and interlocked to provide power from only one control point at a time. Switches operated by foot pressure shall be provided with a shield over the contact button to avoid accidental closing the switch.

(8) **Electrolytic cells.**

(a) **Scope.** These provisions for electrolytic cells apply to the installation of the electrical components and accessory equipment of electrolytic cells, electrolytic cell lines, and

process power supply for the production of aluminum, cadmium, chlorine, copper, fluorine, hydrogen peroxide, magnesium, sodium, sodium chlorate, and zinc. Cells used as a source of electric energy and for electroplating processes and cells used for production of hydrogen are not covered by these provisions.

(b) **Definitions applicable to this subsection.**

Cell line: An assembly of electrically interconnected electrolytic cells supplied by a source of direct-current power.

Cell line attachments and auxiliary equipment: Cell line attachments and auxiliary equipment include, but are not limited to: Auxiliary tanks; process piping; duct work; structural supports; exposed cell line conductors; conduits and other raceways; pumps; positioning equipment and cell cutout or bypass electrical devices. Auxiliary equipment also includes tools, welding machines, crucibles, and other portable equipment used for operation and maintenance within the electrolytic cell line working zone. In the cell line working zone, auxiliary equipment includes the exposed conductive surfaces of ungrounded cranes and crane-mounted cell-servicing equipment.

Cell line working zone: The cell line working zone is the space envelope wherein operation or maintenance is normally performed on or in the vicinity of exposed energized surfaces of cell lines or their attachments.

Electrolytic cells: A receptacle or vessel in which electrochemical reactions are caused by applying energy for the purpose of refining or producing usable materials.

(c) **Application.** Installations covered by subsection (8) of this section shall comply with all applicable provisions of this section except as follows:

(i) Overcurrent protection of electrolytic cell DC process power circuits need not comply with the requirements of WAC 296-24-95607(5).

(ii) Equipment located or used within the cell line working zone or associated with the cell line DC power circuits need not comply with the provisions of WAC 296-24-95607(6).

(iii) Electrolytic cells, cell line conductors, cell line attachments, and the wiring of auxiliary equipment and devices within the cell line working zone need not comply with the provisions of WAC 296-24-95605 and 296-24-95607 (2) and (3).

(d) **Disconnecting means.**

(i) If more than one DC cell line process power supply serves the same cell line, a disconnecting means shall be provided on the cell line circuit side of each power supply to disconnect it from the cell line circuit.

(ii) Removable links or removable conductors may be used as the disconnecting means.

(e) **Portable electric equipment.**

(i) The frames and enclosures of portable electric equipment used within the cell line working zone may not be grounded. However, these frames and enclosures may be grounded if the cell line circuit voltage does not exceed 200 volts DC or if the frames are guarded.

(ii) Ungrounded portable electric equipment shall be distinctively marked and may not be interchangeable with grounded portable electric equipment.

(f) **Power supply circuits and receptacles for portable electric equipment.**

(i) Circuits supplying power to ungrounded receptacles for hand-held, cord- and plug-connected equipment shall be electrically isolated from any distribution system supplying areas other than the cell line working zone and shall be ungrounded. Power for these circuits shall be supplied through isolating transformers.

(ii) Receptacles and their mating plugs for ungrounded equipment may not have provision for a grounding conductor and shall be of a configuration which prevents their use for equipment required to be grounded.

(iii) Receptacles on circuits supplied by an isolating transformer with an ungrounded secondary shall have a distinctive configuration, shall be distinctively marked, and may not be used in any other location in the plant.

(g) **Fixed and portable electric equipment.**

(i) AC systems supplying fixed and portable electric equipment within the cell line working zone need not be grounded.

(ii) Exposed conductive surfaces, such as electric equipment housings, cabinets, boxes, motors, raceways and the like that are within the cell line working zone need not be grounded.

(iii) Auxiliary electrical devices, such as motors, transducers, sensors, control devices, and alarms, mounted on an electrolytic cell or other energized surface, shall be connected by any of the following means:

(A) Multiconductor hard usage or extra hard usage flexible cord;

(B) Wire or cable in suitable raceways; or

(C) Exposed metal conduit, cable tray, armored cable, or similar metallic systems installed with insulating breaks such that they will not cause a potentially hazardous electrical condition.

(iv) Fixed electric equipment may be bonded to the energized conductive surfaces of the cell line, its attachments, or auxiliaries. If fixed electric equipment is mounted on an energized conductive surface, it shall be bonded to that surface.

(h) **Auxiliary nonelectric connections.** Auxiliary nonelectric connections, such as air hoses, water hoses, and the like, to an electrolytic cell, its attachments, or auxiliary equipment may not have continuous conductive reinforcing wire, armor, braids, and the like. Hoses shall be of a nonconductive material.

(i) **Cranes and hoists.**

(i) The conductive surfaces of cranes and hoists that enter the cell line working zone need not be grounded. The portion of an overhead crane or hoist which contacts an energized electrolytic cell or energized attachments shall be insulated from ground.

(ii) Remote crane or hoist controls which may introduce hazardous electrical conditions into the cell line working zone shall employ one or more of the following systems:

(A) Insulated and ungrounded control circuit;

(B) Nonconductive rope operator;

(C) Pendent pushbutton with nonconductive supporting means and having nonconductive surfaces or ungrounded exposed conductive surfaces; or

(D) Radio.

(9) **Electrically driven or controlled irrigation machines.** (See WAC 296-24-95603 (2)(c).)

(a) **Lightning protection.** If an electrically driven or controlled irrigation machines has a stationary point, a driven ground rod shall be connected to the machine at the stationary point for lightning protection.

(b) **Disconnecting means.** The main disconnecting means for a center pivot irrigation machine shall be located at the point of connection of electrical power to the machine and shall be readily accessible and capable of being locked in the open position. A disconnecting means shall be provided for each motor and controller.

(10) **Swimming pools, fountains, and similar installations.**

(a) **Scope.** Subdivisions (b) through (e) of this subsection apply to electric wiring for and equipment in or adjacent to all swimming, wading, therapeutic, and decorative pools and fountains, whether permanently installed or storable, and to metallic auxiliary equipment, such as pumps, filters, and similar equipment. Therapeutic pools in health care facilities are exempt from these provisions.

(b) **Lighting and receptacles.**

(i) **Receptacles.** A single receptacle of the locking and grounding type that provides power for a permanently installed swimming pool recirculating pump motor may be located not less than 5 feet from the inside walls of a pool. All other receptacles on the property shall be located at least 10 feet from the inside walls of a pool. Receptacles which are located within 15 feet of the inside walls of the pool shall be protected by ground-fault circuit interrupters.

Note: In determining these dimensions, the distance to be measured is the shortest path the supply cord of an appliance connected to the receptacle would follow without piercing a floor, wall, or ceiling of a building or other effective permanent barrier.

(ii) **Lighting fixtures and lighting outlets.**

(A) Unless they are 12 feet above the maximum water level, lighting fixtures and lighting outlets may not be installed over a pool or over the area extending 5 feet horizontally from the inside walls of a pool. However, a lighting fixture or lighting outlet which has been installed before April 16, 1981, may be located less than 5 feet measured horizontally from the inside walls of a pool if it is at least 5 feet above the surface of the maximum water level and shall be rigidly attached to the existing structure. It shall also be protected by a ground-fault circuit interrupter installed in the branch circuit supplying the fixture.

(B) Unless installed 5 feet above the maximum water level and rigidly attached to the structure adjacent to or enclosing the pool, lighting fixtures and lighting outlets installed in the area extending between 5 feet and 10 feet horizontally from the inside walls of a pool shall be protected by a ground-fault circuit interrupter.

(c) **Cord-connected and plug-connected equipment.** Flexible cords used with the following equipment may not exceed 3 feet in length and shall have a copper equipment grounding conductor with a grounding-type attachment plug.

(i) Cord-connected and plug-connected lighting fixtures installed within 16 feet of the water surface of permanently installed pools.

(ii) Other cord-connected and plug-connected, fixed or stationary equipment used with permanently installed pools.

(d) **Underwater equipment.**

(i) A ground-fault circuit interrupter shall be installed in the branch circuit supplying underwater fixtures operating at more than 15 volts. Equipment installed underwater shall be approved for the purpose.

(ii) No underwater lighting fixtures may be installed for operation at over 150 volts between conductors.

(e) **Fountains.** All electric equipment operating at more than 15 volts, including power supply cords, used with fountains shall be protected by ground-fault circuit interrupters. (See WAC 296-24-95603 (2)(c).)

(11) Safety procedure and protective equipment required for exposure to movie theater Xenon bulbs. Exposure also includes opening of the lamphouse where the bulb is installed. The following are minimum requirements for theater personnel or others who install, change, or dispose of Xenon bulbs and are exposed to potential explosion hazard:

(a) All bulbs, new, used or subject to future disposal, must be stored in the protective jacket provided until time of use.

(b) Protective equipment shall be furnished at no cost to the employee and the use shall be strictly enforced for any exposed employee. Basic safety equipment required is:

(i) Full protective face shield with crown protector.

(ii) Safety glasses for use under face shield. (To meet required impact resistance test of ANSI Z87.1.)

(iii) Impact resistant, long-sleeved jacket of a length adequate to protect vital organs.

(iv) Impact resistant gloves.

(c) A bulb subject to disposal should be removed with the regular, proper precautions, carefully placed in its protective jacket or cover and deliberately broken by dropping from a sufficient height. An unbroken bulb must never be disposed of as regular garbage or trash.

(d) Bulbs must be handled only at room temperature. If they have been in operation, adequate time (at least 10 minutes) must be allowed for the bulb to cool to room temperature before handling.

[Statutory Authority: Chapter 49.17 RCW. 91-03-044 (Order 90-18), § 296-24-95611, filed 1/10/91, effective 2/12/91; 87-24-051 (Order 87-24), § 296-24-95611, filed 11/30/87. Statutory Authority: RCW 49.17.040 and 49.17.050. 82-08-026 (Order 82-10), § 296-24-95611, filed 3/30/82.]

WAC 296-24-95613 Hazardous (classified) locations. (1) **Scope.** This section covers the requirements for electric equipment and wiring in locations which are classified depending on the properties of the flammable vapors, liquids or gases, or combustible dusts or fibers which may be present therein and the likelihood that a flammable combustible concentration or quantity is present. Hazardous (classified) locations may be found in occupancies such as, but not limited to, the following: Aircraft hangars, gasoline dispensing and service stations, bulk storage plants for gasoline or other volatile flammable liquids, paint-finishing process plants, health care facilities, agricultural or other facilities where excessive combustible dusts may be present, marinas, boat yards, and petroleum and chemical processing plants. Each room, section or area shall be considered individually in determining

its classification. These hazardous (classified) locations are assigned six designations as follows:

Class I,	Division 1
Class I,	Division 2
Class II,	Division 1
Class II,	Division 2
Class III,	Division 1
Class III,	Division 2

For definitions of these locations see WAC 296-24-95601(1). All applicable requirements in this part shall apply to hazardous (classified) locations, unless modified by provisions of this section.

(2) **Electrical installations.** Equipment, wiring methods, and installations of equipment in hazardous (classified) locations shall be intrinsically safe, or approved for the hazardous (classified) location, or safe for the hazardous (classified) location. Requirements for each of these options are as follows:

(a) **Intrinsically safe.** Equipment and associated wiring approved as intrinsically safe shall be permitted in any hazardous (classified) location for which it is approved.

(b) **Approved for the hazardous (classified) location.**

(i) Equipment shall be approved not only for the class of location but also for the ignitible or combustible properties of the specific gas, vapor, dust, or fiber that will be present.

Note: NFPA 70, the National Electrical Code, lists or defines hazardous gases, vapors, and dusts by "groups" characterized by their ignitible or combustible properties.

(ii) Equipment shall be marked to show the class, group, and operating temperature or temperature range, based on operation in a 40 degrees C ambient, for which it is approved. The temperature marking may not exceed the ignition temperature of the specific gas or vapor to be encountered. However, the following provisions modify this marking requirement for specific equipment:

(A) Equipment of the nonheat-producing type, such as junction boxes, conduit, and fittings, and equipment of the heat-producing type having a maximum temperature not more than 100 degrees C (212 degrees F) need not have a marked operating temperature or temperature range.

(B) Fixed lighting fixtures marked for use in Class I, Division 2 locations only, need not be marked to indicate the group.

(C) Fixed general-purpose equipment in Class I locations, other than lighting fixtures, which is acceptable for use in Class I, Division 2 locations need not be marked with the class, group, division, or operating temperature.

(D) Fixed dust-tight equipment, other than lighting fixtures, which is acceptable for use in Class II, Division 2 and Class III locations need not be marked with the class, group, division, or operating temperature.

(c) **Safe for the hazardous (classified) location.** Equipment which is safe for the location shall be of a type and design which the employer demonstrates will provide protection from the hazards arising from the combustibility and flammability of vapors, liquids, gases, dusts, or fibers.

Note: The National Electrical Code, NFPA 70, contains guidelines for determining the type and design of equipment and installations which will meet this requirement. The guidelines of this document address electric wiring, equipment, and systems installed in hazardous (classified) locations and contain specific provisions for the following: Wiring methods, wiring connections; conductor insulation, flexible cords, sealing and drainage, transformers, capacitors, switches, circuit breakers, fuses, motor controllers, receptacles, attachment plugs, meters, relays, instruments, resistors, generators, motors, lighting fixtures, storage battery charging equipment, electric cranes, electric hoists and similar equipment, utilization equipment, signaling systems, alarm systems, remote control systems, local loud speaker and communication systems, ventilation piping, live parts, lighting surge protection, and grounding. Compliance with these guidelines will constitute one means, but not the only means, of compliance with this subsection.

(3) **Conduits.** All conduits shall be threaded and shall be made wrench-tight. Where it is impractical to make a threaded joint tight, a bonding jumper shall be utilized.

(4) **Equipment in Division 2 locations.** Equipment that has been approved for a Division 1 location may be installed in a Division 2 location of the same class and group. General-purpose equipment or equipment in general-purpose enclosures may be installed in Division 2 locations if the equipment does not constitute a source of ignition under normal operating conditions.

(5) **Motors and generators.** Motors and generators shall conform to the following: Class I, Division 1. In Class I, Division 1 locations, motors, generators and other rotating electric machinery shall be: (a) Approved for Class I, Division 1 locations (explosion-proof); or (b) of the totally enclosed type supplied with positive-pressure ventilation from a source of clean air with discharge to a safe area, so arranged to prevent energizing of the machine until ventilation has been established and the enclosure has been purged with at least 10 volumes of air, and also arranged to automatically deenergize the equipment when the air supply fails; or (c) of the totally enclosed inert-gas-filled type supplied with a suitable reliable source of inert gas for pressuring the enclosure, with devices provided to ensure a positive pressure in the enclosure and arranged to automatically deenergize the equipment when the gas supply fails; or (d) of a type designed to be submerged in a liquid which is flammable only when vaporized and mixed with air, or in a gas or vapor at a pressure greater than atmospheric and which is flammable only when mixed with air; and the machine is so arranged to prevent energizing it until it has been purged with the liquid or gas to exclude air, and also arranged to automatically deenergize the equipment when the supply of liquid, or gas or vapor fails or the pressure is reduced to atmospheric. Totally enclosed motors of types (b) and (c) shall have no external surface with an operating temperature in degrees Celsius in excess of eighty percent of the ignition temperature of the gas or vapor involved, as determined by ASTM test procedure (Designation: D-2155-69). Appropriate devices shall be provided to detect any increase in temperature of the motor beyond design limits and automatically deenergize the equipment or provide an adequate alarm. Auxiliary equipment shall be of a type approved for the location in which it is installed.

[Statutory Authority: Chapter 49.17 RCW. 94-15-096 (Order 94-07), § 296-24-95613, filed 7/20/94, effective 9/20/94; 87-24-051 (Order 87-24), § 296-24-95613, filed 11/30/87. Statutory Authority: RCW 49.17.040 and 49.17.050. 82-08-026 (Order 82-10), § 296-24-95613, filed 3/30/82.]

WAC 296-24-95615 Special systems. (1) **Systems over 600 volts, nominal.** Subdivisions (a) through (d) of this subsection cover the general requirements for all circuits and equipment operated at over 600 volts.

(a) **Wiring methods for fixed installations.**

(i) Above-ground conductors shall be installed in rigid metal conduit, in intermediate metal conduit, in cable trays, in cablebus, in other suitable raceways, or as open runs of metal-clad cable suitable for the use and purpose. However, open runs of nonmetallic-sheathed cable or of bare conductors or busbars may be installed in locations accessible only to qualified persons. Metallic shielding components, such as tapes, wires, or braids for conductors, shall be grounded. Open runs of insulated wires and cables having a bare lead sheath or a braided outer covering shall be supported in a manner designed to prevent physical damage to the braid or sheath.

(ii) Conductors emerging from the ground shall be enclosed in approved raceways. (See WAC 296-24-95603 (2)(c).)

(b) **Interrupting and isolating devices.**

(i) Circuit breaker installations located indoors shall consist of metal-enclosed units or fire-resistant cell-mounted units. In locations accessible only to qualified personnel, open mounting of circuit breakers is permitted. A means of indicating the open and closed position of circuit breakers shall be provided.

(ii) Fused cutouts installed in buildings or transformer vaults shall be of a type approved for the purpose. They shall be readily accessible for fuse replacement.

(iii) A means shall be provided to completely isolate equipment for inspection and repairs. Isolating means which are not designed to interrupt the load current of the circuit shall be either interlocked with an approved circuit interrupter or provided with a sign warning against opening them under load.

(c) **Mobile and portable equipment.**

(i) **Power cable connections to mobile machines.** A metallic enclosure shall be provided on the mobile machine for enclosing the terminals of the power cable. The enclosure shall include provisions for a solid connection for the ground wire(s) terminal to effectively ground the machine frame. The method of cable termination used shall prevent any strain or pull on the cable from stressing the electrical connections. The enclosure shall have provision for locking so only authorized qualified persons may open it and shall be marked with a sign warning of the presence of energized parts.

(ii) **Guarding live parts.** All energized switching and control parts shall be enclosed in effectively grounded metal cabinets or enclosures. Circuit breakers and protective equipment shall have the operating means projecting through the metal cabinet or enclosure so these units can be reset without locked doors being opened. Enclosures and metal cabinets shall be locked so that only authorized qualified persons have access and shall be marked with a sign warning of the presence of energized parts. Collector ring assemblies on revolving-type machines (shovels, draglines, etc.) shall be guarded.

(d) **Tunnel installations.**

(i) **Application.** The provisions of this subsection apply to installation and use of high-voltage power distribution and utilization equipment which is portable and/or mobile, such as substations, trailers, cars, mobile shovels, draglines, hoists, drills, dredges, compressors, pumps, conveyors, and underground excavators.

(ii) **Conductors.** Conductors in tunnels shall be installed in one or more of the following:

(A) Metal conduit or other metal raceway,

(B) Type MC cable, or

(C) Other approved multiconductor cable.

Conductors shall also be so located or guarded as to protect them from physical damage. Multiconductor portable cable may supply mobile equipment. An equipment grounding conductor shall be run with circuit conductors inside the metal raceway or inside the multiconductor cable jacket. The equipment grounding conductor may be insulated or bare.

(iii) **Guarding live parts.** Bare terminals of transformers, switches, motor controllers, and other equipment shall be enclosed to prevent accidental contact with energized parts. Enclosures for use in tunnels shall be drip-proof, weatherproof, or submersible as required by the environmental conditions.

(iv) **Disconnecting means.** A disconnecting means that simultaneously opens all ungrounded conductors shall be installed at each transformer or motor location.

(v) **Grounding and bonding.** All nonenergized metal parts of electric equipment and metal raceways and cable sheaths shall be effectively grounded and bonded to all metal pipes and rails at the portal and at intervals not exceeding 1000 feet throughout the tunnel.

(2) **Emergency power systems.**

(a) **Scope.** The provisions for emergency systems apply to circuits, systems, and equipment intended to supply power for illumination and special loads, in the event of failure of the normal supply.

(b) **Wiring methods.** Emergency circuit wiring shall be kept entirely independent of all other wiring and equipment and may not enter the same raceway, cable, box, or cabinet as other wiring except either where common circuit elements suitable for the purpose are required, or for transferring power from the normal to the emergency source.

(c) **Emergency illumination.** Where emergency lighting is necessary, the system shall be so arranged that the failure of any individual lighting element, such as the burning out of a light bulb, cannot leave any space in total darkness.

(3) **Class 1, Class 2, and Class 3 remote control, signaling, and power-limited circuits.**

(a) **Classification.** Class 1, Class 2, or Class 3 remote control, signaling, or power-limited circuits are characterized by their usage and electrical power limitation which differentiates them from light and power circuits. These circuits are classified in accordance with their respective voltage and power limitations as summarized in items (a)(i) through (a)(iii) of this subsection.

(i) **Class 1 circuits.**

(A) A Class 1 power-limited circuit is supplied from a source having a rated output of not more than 30 volts and 1000 volt-amperes.

(B) A Class 1 remote control circuit or a Class 1 signaling circuit has a voltage which does not exceed 600 volts; however, the power output of the source need not be limited.

(ii) **Class 2 and Class 3 circuits.**

(A) Power for Class 2 and Class 3 circuits is limited either inherently (in which no overcurrent protection is required) or by a combination of a power source and overcurrent protection.

(B) The maximum circuit voltage is 150 volts AC or DC for a Class 2 inherently limited power source, and 100 volts AC or DC for a Class 3 inherently limited power source.

(C) The maximum circuit voltage is 30 volts AC and 60 volts DC for a Class 2 power source limited by overcurrent protection, and 150 volts AC or DC for a Class 3 power source limited by overcurrent protection.

(iii) The maximum circuit voltages in items (a)(i) and (a)(ii) of this subsection apply to sinusoidal AC or continuous DC power sources, and where wet contact occurrence is not likely.

(b) **Marking.** A Class 2 or Class 3 power supply unit shall be durably marked where plainly visible to indicate the class of supply and its electrical rating. (See WAC 296-24-95603 (2)(c).)

(4) **Fire protective signaling systems.** (See WAC 296-24-95603 (2)(c).)

(a) **Classifications.** Fire protective signaling circuits shall be classified either as nonpower limited or power limited.

(b) **Power sources.** The power sources for use with fire protective signaling circuits shall be either power limited or nonlimited as follows:

(i) The power supply of nonpower-limited fire protective signaling circuits shall have an output voltage not in excess of 600 volts.

(ii) The power for power-limited fire protective signaling circuits shall be either inherently limited, in which no overcurrent protection is required, or limited by a combination of power source and overcurrent protection.

(c) **Nonpower-limited conductor location.** Nonpower-limited fire protective signaling circuits and Class 1 circuits may occupy the same enclosure, cable, or raceway provided all conductors are insulated for maximum voltage of any conductor within the enclosure, cable or raceway. Power supply and fire protective signaling circuit conductors are permitted in the same enclosure, cable, or raceway only if connected to the same equipment.

(d) **Power-limited conductor location.** Where open conductors are installed, power-limited fire protective signaling circuits shall be separated at least 2 inches from conductors of any light, power, Class 1, and nonpower-limited fire protective signaling circuits unless a special and equally protective method of conductor separation is employed. Cables and conductors of two or more power-limited fire protective signaling circuits or Class 3 circuits are permitted in the same cable, enclosure, or raceway. Conductors of one or more Class 2 circuits are permitted within the same cable, enclosure, or raceway with conductors of power-limited fire protective signaling circuits provided that the insulation of Class 2 circuit conductors in the cable, enclosure, or raceway is at least that needed for the power-limited fire protective signaling circuits.

(e) **Identification.** Fire protective signaling circuits shall be identified at terminal and junction locations in a manner which will prevent unintentional interference with the signaling circuit during testing and servicing. Power-limited fire protective signaling circuits shall be durably marked as such where plainly visible at terminations.

(5) **Communications systems.**

(a) **Scope.** These provisions for communication systems apply to such systems as central-station-connected and non-central-station-connected telephone circuits, radio and television receiving and transmitting equipment, including community antenna television and radio distribution systems, telegraph, district messenger, and outside wiring for fire and burglar alarm, and similar central station systems. These installations need not comply with the provisions of WAC 296-24-95605 through 296-24-95615(4) except 296-24-95607 (3)(a) and 296-24-95613(2).

(b) **Protective devices.**

(i) Communication circuits so located as to be exposed to accidental contact with light or power conductors operating at over 300 volts shall have each circuit so exposed provided with a protector approved for the purpose.

(ii) Each conductor of a lead-in from an outdoor antenna shall be provided with an antenna discharge unit or other suitable means that will drain static charges from the antenna system.

(c) **Conductor location.**

(i) **Outside of buildings.**

(A) Receiving distribution lead-in or aerial-drop cables attached to buildings and lead-in conductors to radio transmitters shall be so installed as to avoid the possibility of accidental contact with electric light or power conductors.

(B) The clearance between lead-in conductors and any lightning protection conductors may not be less than 6 feet.

(ii) **On poles.** Where practicable, communication conductors on poles shall be located below the light or power conductors. Communications conductors may not be attached to a crossarm that carries light or power conductors.

(iii) **Inside of buildings.** Indoor antennas, lead-ins, and other communication conductors attached as open conductors to the inside of buildings shall be located at least 2 inches from conductors of any light or power or Class 1 circuits unless a special and equally protective method of conductor separation, approved for the purpose, is employed.

(d) **Equipment location.** Outdoor metal structures supporting antennas, as well as self-supporting antennas such as vertical rods or dipole structures, shall be located as far away from overhead conductors of electric light and power circuits of over 150 volts to ground as necessary to avoid the possibility of the antenna or structure falling into or making accidental contact with such circuits.

(e) **Grounding.**

(i) **Lead-in conductors.** If exposed to contact with electric light and power conductors, the metal sheath of aerial cables entering buildings shall be grounded or shall be interrupted close to the entrance to the building by an insulating joint or equivalent device. Where protective devices are used, they shall be grounded in an approved manner.

(ii) **Antenna structures.** Masts and metal structures supporting antennas shall be permanently and effectively grounded without splice or connection in the grounding conductor.

(iii) **Equipment enclosures.** Transmitters shall be enclosed in a metal frame or grill or separated from the oper-

ating space by a barrier, all metallic parts of which are effectively connected to ground. All external metal handles and controls accessible to the operating personnel shall be effectively grounded. Unpowered equipment and enclosures shall be considered grounded where connected to an attached coaxial cable with an effectively grounded metallic shield.

[Statutory Authority: RCW 49.17.040 and 49.17.050. 82-08-026 (Order 82-10), § 296-24-95615, filed 3/30/82.]

WAC 296-24-95617 Reserved.

[Statutory Authority: Chapter 49.17 RCW. 91-24-017 (Order 91-07), § 296-24-95617, filed 11/22/91, effective 12/24/91. Statutory Authority: RCW 49.17.040 and 49.17.050. 82-08-026 (Order 82-10), § 296-24-95617, filed 3/30/82.]

WAC 296-24-95699 Appendices. Appendix A - Reference documents. The following references provide information which can be helpful in understanding and complying with the requirements contained in WAC 296-24-956 through 296-24-95615.

ANSI A17.1-71 Safety Code for Elevators, Dumbwaiters, Escalators and Moving Walks.
ANSI B9.1-71 Safety Code for Mechanical Refrigeration.
ANSI B30.2-76 Safety Code for Overhead and Gantry Cranes.
ANSI B30.3-75 Hammerhead Tower Cranes.
ANSI B30.4-73 Safety Code for Portal, Tower, and Pillar Cranes.
ANSI B30.5-68 Safety Code for Crawler, Locomotive, and Truck Cranes.
ANSI B30.6-77 Derricks.
ANSI B30.7-77 Base Mounted Drum Hoists.
ANSI B30.8-71 Safety Code for Floating Cranes and Floating Derricks.
ANSI B30.11-73 Monorail Systems and Underhung Cranes.
ANSI B30.12-75 Handling Loads Suspended from Rotorcraft.
ANSI B30.13-77 Controlled Mechanical Storage Cranes.
ANSI B30.15-73 Safety Code for Mobile Hydraulic Cranes.
ANSI B30.16-73 Overhead Hoists.
ANSI C2-81 National Electrical Safety Code.
ANSI C33.27-74 Safety Standard for Outlet Boxes and Fittings for Use in Hazardous Locations, Class I, Groups A, B, C, and D, and Class II, Groups E, F, and G.
ANSI K61.1-72 Safety Requirements for the Storage and Handling of Anhydrous Ammonia.
ASTM D2155-66 Test Method for Autoignition Temperature of Liquid Petroleum Products.
ASTM D3176-74 Method for Ultimate Analysis of Coal and Coke.
ASTM D3180-74 Method for Calculating Coal and Coke Analyses from as Determined to Different Bases.
IEEE 463-77 Standard for Electrical Safety Practices in Electrolytic Cell Line Working Zones.
NFPA 20-76 Standard for the Installation of Centrifugal Fire Pumps.
NFPA 30-78 Flammable and Combustible Liquids Code.
NFPA 32-74 Standard for Drycleaning Plants.
NFPA 33-73 Standard for Spray Application Using Flammable and Combustible Materials.
NFPA 34-74 Standard for Dip Tanks Containing Flammable or Combustible Liquids.
NFPA 35-76 Standard for the Manufacture of Organic Coatings.
NFPA 36-74 Standard for Solvent Extraction Plants.
NFPA 40-74 Standard for the Storage and Handling of Cellulose Nitrate Motion Picture Film.
NFPA 56A-73 Standard for the Use of Inhalation Anesthetics (Flammable and Nonflammable).
NFPA 56F-74 Standard for Nonflammable Medical Gas Systems.
NFPA 58-76 Standard for the Storage and Handling of Liquefied Petroleum Gases.
NFPA 59-76 Standard for the Storage and Handling of Liquefied Petroleum Gases at Utility Gas Plants.
NFPA 70-78 National Electrical Code.
NFPA 70C-74 Hazardous Locations Classification.
NFPA 70E Standard for the Electrical Safety Requirements for Employee Workplaces.
NFPA 71-77 Standard for the Installation, Maintenance, and Use of Central Station Signaling Systems.
NFPA 72A-75 Standard for the Installation, Maintenance, and Use of Local Protective Signaling Systems for Watchman, Fire Alarm, and Supervisory Service.
NFPA 72B-75 Standard for the Installation, Maintenance, and Use of Auxiliary Protective Signaling Systems for Fire Alarm Service.
NFPA 72C-75 Standard for the Installation, Maintenance, and Use of Remote Station Protective Signaling Systems.
NFPA 72D-75 Standard for the Installation, Maintenance, and Use of Proprietary Protective Signaling Systems for Watchman, Fire Alarm, and Supervisory Service.
NFPA 72E-74 Standard for Automatic Fire Detectors.
NFPA 74-75 Standard for Installation, Maintenance, and Use of Household Fire Warning Equipment.
NFPA 76A-73 Standard for Essential Electrical Systems for Health Care Facilities.
NFPA 77-72 Recommended Practice on Static Electricity.
NFPA 80-77 Standard for Fire Doors and Windows.
NFPA 86A-73 Standard for Ovens and Furnaces; Design, Location and Equipment.
NFPA 88A-73 Standard for Parking Structures.
NFPA 88B-73 Standard for Repair Garages.
NFPA 91-73 Standard for the Installation of Blower and Exhaust Systems for Dust, Stock, and Vapor Removal, or Conveying.
NFPA 101-78 Code for Safety to Life from Fire in Buildings and Structures. (Life Safety Code.)
NFPA 325M-69 Fire-Hazard Properties of Flammable Liquids, Gases, and Volatile Solids.
NFPA 493-75 Standard for Intrinsically Safe Apparatus for Use in Class I Hazardous Locations and its Associated Apparatus.
NFPA 496-74 Standard for Purged and Pressurized Enclosures for Electrical Equipment in Hazardous Locations.
NFPA 497-75 Recommended Practice for Classification of Class I Hazardous Locations for Electrical Installations in Chemical Plants.
NFPA 505-75 Fire Safety Standard for Powered Industrial Trucks Including Type Designations and Areas of Use.

NMAB 353-1-79 Matrix of Combustion-Relevant Properties and Classification of Gases, Vapors, and Selected Solids.
NMAB 353-2-79 Test Equipment for Use in Determining Classifications of Combustible Dusts.
NMAB 353-3-80 Classification of Combustible Dusts in Accordance with the National Electrical Code.

[Statutory Authority: RCW 49.17.040 and 49.17.050. 82-08-026 (Order 82-10), § 296-24-95699, filed 3/30/82.]

WAC 296-24-960 Working on or near exposed energized parts. (1) Application. This section applies to work performed on exposed live parts (involving either direct contact or contact by means of tools or materials) or near enough to them for employees to be exposed to any hazard they present.

(2) Work on energized equipment. Only qualified persons shall work on electric circuit parts or equipment that have not been deenergized under the procedures of WAC 296-24-975(2). Such persons shall be capable of working safely on energized circuits and shall be familiar with the proper use of special precautionary techniques, personal protective equipment, insulating and shielding materials, and insulated tools.

(3) General requirements - High voltage lines.

(a) Minimum clearance.

(i) No work shall be performed, no material shall be piled, stored or otherwise handled, no scaffolding, commercial signs, or structures shall be erected or dismantled, nor any tools, machinery or equipment operated within the specified minimum distances from any energized high voltage electrical conductor capable of energizing the material or equipment; except where the electrical distribution and transmission lines have been deenergized and visibly grounded at point of work, or where insulating barriers not a part of or an attachment to the equipment have been erected, to prevent physical contact with the lines, equipment shall be operated proximate to, under, over, by, or near powerlines only in accordance with the following:

(ii) For lines rated 50 kv. or below, minimum clearance between the lines and any part of the equipment or load shall be 10 feet.

(iii) For lines rated over 50 kv. minimum, clearance between the lines and any part of the equipment or load shall be 10 feet plus 0.4 inch for each 1 kv. over 50 kv., or twice the length of the line insulator but never less than 10 feet.

(b) Overhead electric lines. Where overhead electric conductors are encountered in proximity to a work area, the employer shall be responsible for:

(i) Ascertaining the voltage and minimum clearance distance required, and

(ii) Maintaining the minimum clearance distance, and

(iii) Ensuring that the requirements of subsection (3) of this section are complied with.

(c) Not covered: Employees working under chapters 296-32 and 296-45 WAC.

(4) Low voltage lines. When work is being carried out in proximity to energized electrical service conductors operating at 750 volts or less, such work shall be performed in a manner to prevent contact by any worker with the energized conductors.

(5) Overhead lines. If work is to be performed near overhead lines, the lines shall be deenergized and grounded, or other protective measures shall be provided before work is started. If the lines are to be deenergized, arrangements shall be made with the person or organization that operates or controls the electric circuits involved to deenergize and ground them. If protective measures, such as guarding, isolating, or insulating, these precautions shall prevent employees from contacting such lines directly with any part of their body or indirectly through conductive materials, tools, or equipment.

(6) Unqualified persons. When an unqualified person is working in an elevated position, or on the ground, near overhead lines, the location shall be such that the person and the longest conductive object he or she may contact cannot come closer to any unguarded, energized overhead line than the following distances:

(a) For voltages to ground 50kV or below—10 ft.;

(b) For voltages to ground over 50kV—10 ft. plus 0.4 inch for every 1 kV over 50 kV.

(7) Qualified persons. When a qualified person is working in the vicinity of overhead lines, whether in an elevated position or on the ground, the person shall not approach or take any conductive object without an approved insulating handle closer to exposed energized parts than shown in subsections (3) and (4) of this section unless:

(a) The person is insulated from the energized part (gloves, with sleeves if necessary, rated for the voltage involved are considered to be insulation of the person from the energized part on which work is performed); or

(b) The energized part is insulated both from all other conductive objects at a different potential and from the person; or

(c) The person is insulated from all conductive objects at a potential different from that of the energized part.

(8) Vehicular and mechanical equipment.

(a) Any vehicle or mechanical equipment capable of having parts of its structure elevated near energized overhead lines shall be operated so that a clearance of 10 ft. is maintained. If the voltage is higher than 50kV, the clearance shall be increased 0.4 inch for every 1kV over that voltage. However, under any of the following conditions, the clearance may be reduced:

(i) If the vehicle is in transit with its structure lowered, the clearance may be reduced to 4 ft. If the voltage is higher than 50kV, the clearance shall be increased 0.4 inch for every 1kV over that voltage.

(ii) If insulating barriers are installed to prevent contact with the lines, and if the barriers are rated for the voltage of the line being guarded and are not a part of or an attachment to the vehicle or its raised structure, the clearance may be reduced to a distance within the designed working dimensions of the insulating barrier.

(b) If the equipment is an aerial lift insulated for the voltage involved, and if the work is performed by a qualified person, the clearance (between the uninsulated portion of the aerial lift and the power line) may be reduced to the distance given in subsections (3) and (4) of this section.

(c) Employees standing on the ground shall not contact the vehicle or mechanical equipment or any of its attachments, unless:

(i) The employee is using protective equipment rated for the voltage; or

(ii) The equipment is located so that no uninsulated part of its structure (that portion of the structure that provides a conductive path to employees on the ground) can come closer to the line than permitted in this section.

(d) If any vehicle or mechanical equipment capable of having parts of its structure elevated near energized overhead lines is intentionally grounded, employees working on the ground near the point of grounding shall not stand at the grounding location whenever there is a possibility of overhead line contact. Additional precautions, such as the use of barricades or insulation, shall be taken to protect employees from hazardous ground potentials, depending on earth resistivity and fault currents, which can develop within the first few feet or more outward from the grounding point.

(9) Illumination.

(a) Employees shall not enter spaces containing exposed energized parts, unless illumination is provided that enables the employees to perform the work safely.

(b) Where lack of illumination or an obstruction precludes observation of the work to be performed, employees shall not perform tasks near exposed energized parts. Employees shall not reach blindly into areas which may contain energized parts.

(10) Confined or enclosed work spaces. When an employee works in a confined or enclosed space (such as a manhole or vault) that contains exposed energized parts, the employer shall provide, and the employee shall use, protective shields, protective barriers, or insulating materials as necessary to avoid inadvertent contact with these parts. Doors, hinged panels, and the like shall be secured to prevent their swinging into an employee and causing the employee to contact exposed energized parts.

(11) Conductive materials and equipment. Conductive materials and equipment that are in contact with any part of an employee's body shall be handled in a manner that will prevent them from contacting exposed energized conductors or circuit parts. If an employee must handle long dimensional conductive objects (such as ducts and pipes) in areas with exposed live parts, the employer shall institute work practices (such as the use of insulation, guarding, and material handling techniques) which will minimize the hazard.

(12) Portable ladders. Portable ladders shall have nonconductive siderails if they are used where the employee or the ladder could contact exposed energized parts.

(13) Conductive apparel. Conductive articles of jewelry and clothing (such as watch bands, bracelets, rings, key chains, necklaces, metalized aprons, cloth with conductive thread, or metal headgear) shall not be worn if they might contact exposed energized parts.

(14) Housekeeping duties.

(a) Where live parts present an electrical contact hazard, employees shall not perform housekeeping duties at such close distances to the parts that there is a possibility of contact, unless adequate safeguards (such as insulating equipment or barriers) are provided.

(b) Electrically conductive cleaning materials (including conductive solids such as steel wool, metalized cloth, and silicon carbide, as well as conductive liquid solutions) shall not be used in proximity to energized parts unless procedures are followed which will prevent electrical contact.

(15) Interlocks. Only a qualified person following the requirements of this section may defeat an electrical safety interlock, and then only temporarily while he or she is working on the equipment. The interlock system shall be returned to its operable condition when this work is completed.

[Statutory Authority: Chapter 49.17 RCW. 94-15-096 (Order 94-07), § 296-24-960, filed 7/20/94, effective 9/20/94; 91-24-017 (Order 91-07), § 296-24-960, filed 11/22/91, effective 12/24/91. Statutory Authority: RCW 49.17.040 and 49.17.050. 82-13-045 (Order 82-22), § 296-24-960, filed 6/11/82; 82-02-003 (Order 81-32), § 296-24-960, filed 12/24/81.]

WAC 296-24-965 Safety-related work practices. (1) Scope. Covered work by both qualified and unqualified persons. The provisions of WAC 296-24-960 through 296-24-985 cover electrical safety-related work practices for both qualified persons (those who have training in avoiding the electrical hazards of working on or near exposed energized parts) and unqualified persons (those with little or no such training) working on, near, or with the following installations:

(a) Premises wiring. Installations of electric conductors and equipment within or on buildings or other structures, and on other premises such as yards, carnival, parking, and other lots, and industrial substations;

(b) Wiring for connection to supply. Installations of conductors that connect to the supply of electricity;

(c) Other wiring. Installations of other outside conductors on the premises; and

(d) Optical fiber cable. Installations of optical fiber cable where such installations are made along with electric conductors.

Note: See WAC 296-24-95601 for the definition of "qualified person." See WAC 296-24-970 for training requirements that apply to qualified and unqualified persons.

(2) Other covered work by unqualified persons. The provisions of WAC 296-24-960 through 296-24-985 also cover work performed by unqualified persons on, near, or with the installations listed in subsection (3) of this section.

(3) Excluded work by qualified persons. The provisions of WAC 296-24-960 through 296-24-985 do not apply to work performed by qualified persons on or directly associated with the following installations:

(a) Generation, transmission, and distribution installations. Installations for the generation, control, transformation, transmission, and distribution of electric energy (including communication and metering) located in buildings used for such purposes or located outdoors.

Note 1: Work on or directly associated with installations of utilization equipment used for purposes other than generating, transmitting, or distributing electric energy (such as installations which are in office buildings, warehouses, garages, machine shops, or recreational buildings, or other utilization installations which are not an integral part of a generating installation, substation, or control center) is covered under subsection (1)(a) of this section.

Note 2: Work on or directly associated with generation, transmission, or distribution installations includes:
1. Work performed directly on such installations, such as repairing overhead or underground distribution lines or repairing a feed-water pump for the boiler in a generating plant.
2. Work directly associated with such installations, such as line-clearance tree trimming and replacing utility poles.

3. Work on electric utilization circuits in a generating plant provided that:
a. Such circuits are commingled with installations of power generation equipment or circuits; and
b. The generation equipment or circuits present greater electrical hazards than those posed by the utilization equipment or circuits (such as exposure to higher voltages or lack of overcurrent protection).

(b) Communications installations. Installations of communication equipment to the extent that the work is covered under chapter 296-32 WAC.

(c) Installations in vehicles. Installations in ships, watercraft, railway rolling stock, aircraft, or automotive vehicles other than mobile homes and recreational vehicles.

(d) Railway installations. Installations of railways for generation, transformation, transmission, or distribution of power used exclusively for operation of rolling stock or installations of railways used exclusively for signaling and communication purposes.

[Statutory Authority: Chapter 49.17 RCW. 91-24-017 (Order 91-07), § 296-24-965, filed 11/22/91, effective 12/24/91.]

WAC 296-24-970 Training. (1) Scope. The training requirements contained in this section apply to employees who face a risk of electric shock that is not reduced to a safe level by the electrical installation requirements of WAC 296-24-95605 through 296-24-95615.

Note: Employees in occupations listed in Table S-4 face such a risk and are required to be trained. Other employees who also may reasonably be expected to face a comparable risk of injury due to electric shock or other electrical hazards must also be trained.

(2) Content of training.

(a) Practices addressed in this standard. Employees shall be trained in and familiar with the safety-related work practices required by WAC 296-24-960 through 296-24-985 that pertain to their respective job assignments.

(b) Additional requirements for unqualified persons. Employees who are covered by subsection (1) of this section but who are not qualified persons shall also be trained in and familiar with any electrically related safety practices not specifically addressed by WAC 296-24-960 through 296-24-985 but which are necessary for their safety.

(c) Additional requirements for qualified persons. Qualified persons (i.e., those permitted to work on or near exposed energized parts) shall, at a minimum, be trained in and familiar with the following:

(i) The skills and techniques necessary to distinguish exposed live parts from other parts of electric equipment;

(ii) The skills and techniques necessary to determine the nominal voltage of exposed live parts; and

(iii) The clearance distances specified in WAC 296-24-960 and the corresponding voltages to which the qualified person will be exposed.

Note 1: For the purposes of WAC 296-24-960 through 296-24-985 a person must have the training required by (c) of this subsection in order to be considered a qualified person.

Note 2: Qualified persons whose work on energized equipment involves either direct contact or contact by means of tools or materials must also have the training needed to meet WAC 296-24-960.

(3) Type of training. The training required by this section shall be of the classroom or on-the-job type. The degree of training provided shall be determined by the risk to the employee.

TABLE S-4.—TYPICAL OCCUPATIONAL CATEGORIES OF EMPLOYEES FACING A HIGHER THAN NORMAL RISK OF ELECTRICAL ACCIDENT

Occupation
Blue collar supervisors.[1]
Electrical and electronic engineers.[1]
Electrical and electronic equipment assemblers.[1]
Electrical and electronic technicians.[1]
Electricians.
Industrial machine operators.[1]
Material handling equipment operators.[1]
Mechanics and repairers.[1]
Painters.[1]
Riggers and roustabouts.[1]
Stationary engineers.[1]
Welders.

[1] Workers in these groups do not need to be trained if their work or the work of those they supervise does not bring them or the employees they supervise close enough to exposed parts of electric circuits operating at 50 volts or more to ground for a hazard to exist.

[Statutory Authority: Chapter 49.17 RCW. 91-24-017 (Order 91-07), § 296-24-970, filed 11/22/91, effective 12/24/91.]

WAC 296-24-975 Selection and use of work practices. (1) General. Safety-related work practices shall be employed to prevent electric shock or other injuries resulting from either direct or indirect electrical contacts, when work is performed near or on equipment or circuits which are or may be energized. The specific safety-related work practices shall be consistent with the nature and extent of the associated electrical hazards.

(a) Deenergized parts. Live parts to which an employee may be exposed shall be deenergized before the employee works on or near them, unless the employer can demonstrate that deenergizing introduces additional or increased hazards or is infeasible due to equipment design or operational limitations. Live parts that operate at less than 50 volts to ground need not be deenergized if there will be no increased exposure to electrical burns or to explosion due to electric arcs.

Note 1: Examples of increased or additional hazards include interruption of life support equipment, deactivation of emergency alarm systems, shutdown of hazardous location ventilation equipment, or removal of illumination for an area.

Note 2: Examples of work that may be performed on or near energized circuit parts because of infeasibility due to equipment design or operational limitations include testing of electric circuits that can only be performed with the circuit energized and work on circuits that form an integral part of a continuous industrial process in a chemical plant that would otherwise need to be completely shut down in order to permit work on one circuit or piece of equipment.

Note 3: Work on or near deenergized parts is covered by subsection (2) of this section.

(b) Energized parts. If the exposed live parts are not deenergized (i.e., for reasons of increased or additional hazards or infeasibility), other safety-related work practices shall be used to protect employees who may be exposed to the electrical hazards involved. Such work practices shall protect employees against contact with energized circuit parts directly with any part of their body or indirectly through some other conductive object. The work practices that are

used shall be suitable for the conditions under which the work is to be performed and for the voltage level of the exposed electric conductors or circuit parts. Specific work practice requirements are detailed in WAC 296-24-960.

(2) Working on or near exposed deenergized parts.

(a) Application. This subsection applies to work on exposed deenergized parts or near enough to them to expose the employee to any electrical hazard they present. Conductors and parts of electric equipment that have been deenergized but have not been locked out or tagged according to this subsection shall be treated as energized parts, and WAC 296-24-960 applies to work on or near them.

(b) Lockout and tagging. While any employee is exposed to contact with parts of fixed electric equipment or circuits which have been deenergized, the circuits energizing the parts shall be locked out or tagged or both according to the requirements of this section. The requirements shall be followed in the order in which they are presented (i.e., (b)(i) of this subsection first, then (b)(ii) of this subsection.

Note 1: As used in this section, fixed equipment refers to equipment fastened in place or connected by permanent wiring methods.

Note 2: Lockout and tagging procedures that comply with chapter 296-803 WAC, Lockout/tagout (control of hazardous energy) will also be deemed to comply with (b) of this subsection provided that:
1. The procedures address the electrical safety hazards covered by this part; and
2. The procedures also incorporate the requirements of (b)(iii)(D) and (b)(iv)(B) of this subsection.

(i) Procedures. The employer shall maintain a written copy of the procedures outlined in (b) of this subsection and shall make it available for inspection by employees and by the director and his or her authorized representatives.

Note: The written procedures may be in the form of a copy of subsection (2) of this section.

(ii) Deenergizing equipment.

(A) Safe procedures for deenergizing circuits and equipment shall be determined before circuits or equipment are deenergized.

(B) The circuits and equipment to be worked on shall be disconnected from all electric energy sources. Control circuit devices, such as push buttons, selector switches, and interlocks, shall not be used as the sole means for deenergizing circuits or equipment. Interlocks for electric equipment shall not be used as a substitute for lockout and tagging procedures.

(C) Stored electric energy which might endanger personnel shall be released. Capacitors shall be discharged and high capacitance elements shall be short-circuited and grounded, if the stored electric energy might endanger personnel.

Note: If the capacitors or associated equipment are handled in meeting this requirement, they shall be treated as energized.

(D) Stored nonelectrical energy in devices that could reenergize electric circuit parts shall be blocked or relieved to the extent that the circuit parts could not be accidentally energized by the device.

(iii) Application of locks and tags.

(A) A lock and a tag shall be placed on each disconnecting means used to deenergize circuits and equipment on which work is to be performed, except as provided in subitems (C) and (E) of this item. The lock shall be attached to prevent persons from operating the disconnecting means unless they resort to undue force or the use of tools.

(B) Each tag shall contain a statement prohibiting unauthorized operation of the disconnecting means and removal of the tag.

(C) If a lock cannot be applied, or if the employer can demonstrate that tagging procedures will provide a level of safety equivalent to that obtained by the use of a lock, a tag may be used without a lock.

(D) A tag used without a lock, as permitted by subitem (C) of this item, shall be supplemented by at least one additional safety measure that provides a level of safety equivalent to that obtained by the use of a lock. Examples of additional safety measures include the removal of an isolating circuit element, blocking of a controlling switch, or opening of an extra disconnecting device.

(E) A lock may be placed without a tag only under the following conditions:

(I) Only one circuit or piece of equipment is deenergized; and

(II) The lockout period does not extend beyond the work shift; and

(III) Employees exposed to the hazards associated with reenergizing the circuit or equipment are familiar with this procedure.

(iv) Verification of deenergized condition. The requirements of this subsection shall be met before any circuits or equipment can be considered and worked as deenergized.

(A) A qualified person shall operate the equipment operating controls or otherwise verify that the equipment cannot be restarted.

(B) A qualified person shall use test equipment to test the circuit elements and electrical parts of equipment to which employees will be exposed and shall verify that the circuit elements and equipment parts are deenergized. The test shall also determine if any energized condition exists as a result of inadvertently induced voltage or unrelated voltage backfeed even though specific parts of the circuit have been deenergized and presumed to be safe. If the circuit to be tested is over 600 volts, nominal, the test equipment shall be checked for proper operation immediately before and immediately after this test.

(v) Reenergizing equipment. These requirements shall be met, in the order given, before circuits or equipment are reenergized, even temporarily.

(A) A qualified person shall conduct tests and visual inspections, as necessary, to verify that all tools, electrical jumpers, shorts, grounds, and other such devices have been removed, so that the circuits and equipment can be safely energized.

(B) Employees exposed to the hazards associated with reenergizing the circuit or equipment shall be warned to stay clear of circuits and equipment.

(C) Each lock and tag shall be removed by the employee who applied it or under his or her direct supervision. However, if this employee is absent from the workplace, then the lock or tag may be removed by a qualified person designated to perform this task provided that:

(I) The employer ensures that the employee who applied the lock or tag is not available at the workplace; and

(II) The employer ensures that the employee is aware that the lock or tag has been removed before he or she resumes work at that workplace.

(D) There shall be a visual determination that all employees are clear of the circuits and equipment.

[Statutory Authority: RCW 49.17.010, 49.17.040, 49.17.050, and 49.17.060. 04-15-105, § 296-24-975, filed 7/20/04, effective 11/1/04. Statutory Authority: Chapter 49.17 RCW. 94-15-096 (Order 94-07), § 296-24-975, filed 7/20/94, effective 9/20/94; 91-24-017 (Order 91-07), § 296-24-975, filed 11/22/91, effective 12/24/91.]

WAC 296-24-980 Safeguards for personnel protection. (1) Use of protective equipment.

(a) Personal protective equipment.

(i) Employees working in areas where there are potential electrical hazards shall be provided with, and shall use, electrical protective equipment that is appropriate for the specific parts of the body to be protected and for the work to be performed.

Note: Personal protective equipment requirements are contained in chapter 296-24 WAC Part L, and WAC 296-800-160.

(ii) Protective equipment shall be maintained in a safe, reliable condition and shall be periodically inspected or tested, as required by chapter 296-24 WAC Part L, and WAC 296-800-160.

(iii) If the insulating capability of protective equipment may be subject to damage during use, the insulating material shall be protected. (For example, an outer covering of leather is sometimes used for the protection of rubber insulating material.)

(iv) Employees shall wear nonconductive head protection wherever there is a danger of head injury from electric shock or burns due to contact with exposed energized parts.

(v) Employees shall wear protective equipment for the eyes or face wherever there is danger of injury to the eyes or face from electric arcs or flashes or from flying objects resulting from electrical explosion.

(b) General protective equipment and tools.

(i) When working near exposed energized conductors or circuit parts, each employee shall use insulated tools or handling equipment if the tools or handling equipment might make contact with such conductors or parts. If the insulating capability of insulated tools or handling equipment is subject to damage, the insulating material shall be protected.

(A) Fuse handling equipment, insulated for the circuit voltage, shall be used to remove or install fuses when the fuse terminals are energized.

(B) Ropes and handlines used near exposed energized parts shall be nonconductive.

(ii) Protective shields, protective barriers, or insulating materials shall be used to protect each employee from shock, burns, or other electrically related injuries while that employee is working near exposed energized parts which might be accidentally contacted or where dangerous electric heating or arcing might occur. When normally enclosed live parts are exposed for maintenance or repair, they shall be guarded to protect unqualified persons from contact with the live parts.

(2) Alerting techniques. The following alerting techniques shall be used to warn and protect employees from hazards which could cause injury due to electric shock, burns, or failure of electric equipment parts:

(a) Safety signs and tags. Safety signs, safety symbols, or accident prevention tags shall be used where necessary to warn employees about electrical hazards which may endanger them.

(b) Barricades. Barricades shall be used in conjunction with safety signs where it is necessary to prevent or limit employee access to work areas exposing employees to uninsulated energized conductors or circuit parts. Conductive barricades may not be used where they might cause an electrical contact hazard.

(c) Attendants. If signs and barricades do not provide sufficient warning and protection from electrical hazards, an attendant shall be stationed to warn and protect employees.

(3) Design requirements. Insulating blankets, matting, covers, line hose, gloves, and sleeves made of rubber shall meet the following requirements:

(a) Manufacture and marking.

(i) Blankets, gloves, and sleeves shall be produced by a seamless process.

(ii) Each item shall be clearly marked as follows:

(A) Class 0 equipment shall be marked Class 0.

(B) Class 1 equipment shall be marked Class 1.

(C) Class 2 equipment shall be marked Class 2.

(D) Class 3 equipment shall be marked Class 3.

(E) Class 4 equipment shall be marked Class 4.

(F) Nonozone-resistant equipment other than matting shall be marked Type I.

(G) Ozone-resistant equipment other than matting shall be marked Type II.

(H) Other relevant markings, such as the manufacturer's identification and the size of the equipment, may also be provided.

(iii) Markings shall be nonconducting and shall be applied in such a manner as not to impair the insulating qualities of the equipment.

(iv) Markings on gloves shall be confined to the cuff portion of the glove.

(b) Electrical requirements.

(i) Equipment shall be capable of withstanding the a-c proof-test voltage specified in Table A-2 or the d-c proof-test voltage specified in Table A-3.

(A) The proof-test shall reliably indicate that the equipment can withstand the voltage involved.

(B) The test voltage shall be applied continuously for three minutes for equipment other than matting and shall be applied continuously for one minute for matting.

(C) Gloves shall also be capable of withstanding the a-c proof-test voltage specified in Table A-2 after a sixteen-hour water soak. (See the note following (c)(ii)(B) of this subsection.)

(ii) When the a-c proof-test is used on gloves, the 60 hertz proof-test current may not exceed the values specified in Table A-2 at any time during the test period.

(A) If the a-c proof-test is made at a frequency other than 60 hertz, the permissible proof-test current shall be computed from the direct ratio of the frequencies.

(B) For the test, gloves (right side out) shall be filled with tap water and immersed in water to a depth that is in accordance with Table A-4. Water shall be added to or

removed from the glove, as necessary, so that the water level is the same inside and outside the glove.

(C) After the sixteen-hour water soak specified in (b)(i)(C) of this subsection, the 60-hertz proof-test current may exceed the values given in Table A-2 by not more than 2 milliamperes.

(iii) Equipment that has been subjected to a minimum breakdown voltage test may not be used for electrical protection. (See the note following (c)(ii)(B) of this subsection.)

(iv) Material used for Type II insulating equipment shall be capable of withstanding an ozone test, with no visible effects. The ozone test shall reliably indicate that the material will resist ozone exposure in actual use. Any visible signs of ozone deterioration of the material, such as checking, cracking, breaks, or pitting, is evidence of failure to meet the requirements for ozone-resistant material. (See the note following (c)(ii)(B) of this subsection.)

(c) Workmanship and finish.

(i) Equipment shall be free of harmful physical irregularities that can be detected by the tests or inspections required under this section.

(ii) Surface irregularities that may be present on all rubber goods because of imperfections on forms or molds or because of inherent difficulties in the manufacturing process and that may appear as indentations, protuberances, or imbedded foreign material are acceptable under the following conditions:

(A) The indentation or protuberance blends into a smooth slope when the material is stretched.

(B) Foreign material remains in place when the insulating material is folded and stretches with the insulating material surrounding it.

Note: Rubber insulating equipment meeting the following national consensus standards is deemed to be in compliance with subsection (1) of this section:
American Society for Testing and Materials (ASTM) D 120-87, Specification for Rubber Insulating Gloves.
ASTM D 178-93, Specification for Rubber Insulating Matting.
ASTM D 1048-93, Specification for Rubber Insulating Blankets.
ASTM D 1049-93, Specification for Rubber Insulating Covers.
ASTM D 1050-90, Specification for Rubber Insulating Line Hose.
ASTM D 1051-87, Specification for Rubber Insulating Sleeves.
These standards contain specifications for conducting the various tests required in subsection (1) of this section. For example, the a-c and d-c proof-tests, the breakdown test, the water soak procedure, and the ozone test mentioned in this paragraph are described in detail in the ASTM standards.

(4) In-service care and use.

(a) Electrical protective equipment shall be maintained in a safe, reliable condition.

(b) The following specific requirements apply to insulating blankets, covers, line hose, gloves, and sleeves made of rubber:

(i) Maximum use voltages shall conform to those listed in Table A-5.

(ii) Insulating equipment shall be inspected for damage before each day's use and immediately following any incident that can reasonably be suspected of having caused damage. Insulating gloves shall be given an air test, along with the inspection.

(iii) Insulating equipment with any of the following defects may not be used:

(A) A hole, tear, puncture, or cut;

(B) Ozone cutting or ozone checking (the cutting action produced by ozone on rubber under mechanical stress into a series of interlacing cracks);

(C) An embedded foreign object;

(D) Any of the following texture changes: Swelling, softening, hardening, or becoming sticky or inelastic.

(E) Any other defect that damages the insulating properties.

(iv) Insulating equipment found to have other defects that might affect its insulating properties shall be removed from service and returned for testing under (b)(viii) and (ix) of this subsection.

(v) Insulating equipment shall be cleaned as needed to remove foreign substances.

(vi) Insulating equipment shall be stored in such a location and in such a manner as to protect it from light, temperature extremes, excessive humidity, ozone, and other injurious substances and conditions.

(vii) Protector gloves shall be worn over insulating gloves.

(viii) Electrical protective equipment shall be subjected to periodic electrical tests. Test voltages and the maximum intervals between tests shall be in accordance with Table A-5 and Table A-6.

(ix) The test method used under (b)(viii) and (xi) of this subsection shall reliably indicate whether the insulating equipment can withstand the voltages involved.

Note: Standard electrical test methods considered as meeting this requirement are given in the following national consensus standards:
American Society for Testing and Materials (ASTM) D 120-87, Specification for Rubber Insulating Gloves.
ASTM D 1048-93, Specification for Rubber Insulating Blankets.
ASTM D 1049-93, Specification for Rubber Insulating Covers.
ASTM D 1050-90, Specification for Rubber Insulating Line Hose.
ASTM D 1051-87, Specification for Rubber Insulating Sleeves.
ASTM F 478-92, Specification for In-Service Care of Insulating Line Hose and Covers.
ASTM F 479-88a, Specification for In-Service Care of Insulating Blankets.
ASTM F 496-93b, Specification for In-Service Care of Insulating Gloves and Sleeves.

(x) Insulating equipment failing to pass inspections or electrical tests shall not be used by employees, except as follows:

(A) Rubber insulating line hose could be used in shorter lengths with the defective portion cut off.

(B) Rubber insulating blankets could be repaired using a compatible patch that results in physical and electrical properties equal to those of the blanket.

(C) Rubber insulating blankets could be salvaged by severing the defective area from the undamaged portion of the blanket. The resulting undamaged area shall not be smaller than twenty-two inches by twenty-two inches (560 mm by 560 mm) for Class 1, 2, 3, and 4 blankets.

(xi) Repaired insulating equipment shall be retested before it may be used by employees.

(xii) The employer shall certify that equipment has been tested in accordance with the requirements of (b)(viii), (ix), and (xi) of this subsection. The certification shall identify the equipment that passed the test and the date it was tested.

Note: Marking of equipment and entering the results of the tests and the dates of testing onto logs are two acceptable means of meeting this requirement.

Table A-2. -A-C Proof-Test Requirements

Maximum proof-test current, mA (gloves only) Class of equipment	Proof-test voltage rms V	267-mm (10.5-in) glove	356-mm (14-in) glove	406-mm (16-in) glove	457-mm (18-in) glove
0	5,000	8	12	14	16
1	10,000		14	16	18
2	20,000		16	18	20
3	30,000		18	20	22
4	40,000			22	24

Table A-3. -D-C Proof-Test Requirements

Class of equipment	Proof-test voltage
0	20,000
1	40,000
2	50,000
3	60,000
4	70,000

Note: The d-c voltages listed in this table are not appropriate for proof-testing rubber insulating line hose or covers. For this equipment, d-c proof-tests shall use a voltage high enough to indicate that the equipment can be safely used at the voltages listed in Table A-4. See ASTM D 1050-90 and ASTM D 1049-88 for further information on proof-tests for rubber insulating line hose and covers.

Table A-4. -Glove Tests-Water Level[1, 2]

Class of glove	A-C proof-test mm.	A-C proof-test in.	D-C proof-test mm.	D-C proof-test in.
0	38	1.5	38	1.5
1	38	1.5	51	2.0
2	64	2.5	76	3.0
3	89	3.5	102	4.0
4	127	5.0	153	6.0

[1] The water level is given as the clearance from the cuff of the glove to the water line, with a tolerance of 13 mm. (0.5 in.).

[2] If atmospheric conditions make the specified clearances impractical, the clearances may be increased by a maximum of 25 mm. (1 in.).

Table A-5. -Rubber Insulating Equipment Voltage Requirements

Class of equipment	Maximum use voltage[1] a-c-rms	Retest voltage[2] a-c-rms	Retest voltage[2] d-c-rms
0	1,000	5,000	20,000
1	7,500	10,000	40,000
2	17,000	20,000	50,000
3	26,500	30,000	60,000
4	36,000	40,000	70,000

Note: Rubber gloves shall only be used on voltages of 5000 volts phase-to-phase or less.

[1]The maximum use voltage is the a-c voltage (rms) classification of the protective equipment that designates the maximum nominal design/voltage of the energized system that may be safely worked. The nominal design voltage is equal to the phase-to-phase voltage on multiphase circuits. However, the phase-to-ground potential is considered to be the nominal design/voltage:

1. If there is no multiphase exposure in a system area and if the voltage exposure is limited to the phase-to-ground potential, or

2. If the electrical equipment and devices are insulated or isolated or both so that the multiphase exposure on a grounded wye circuit is removed.

[2] The proof-test voltage shall be applied continuously for at least one minute, but no more than three minutes.

Table A-6. -Rubber Insulating Equipment Test Intervals

Type of equipment	When to test
Rubber insulating line hose	Upon indication that insulating value is suspect.
Rubber insulating covers	Upon indication that insulating value is suspect.
Rubber insulating blankets	Before first issue and every 12 months thereafter.[1]
Rubber insulating gloves	Before first issue and every 6 months thereafter.[1]
Rubber insulating sleeves	Before first issue and every 12 months thereafter.[1]

[1] If the insulating equipment has been electrically tested but not issued for service, it may not be placed into service unless it has been electrically tested within the previous 12 months.

(5) Where switches or fuses of more than 150 volts to ground are not guarded during ordinary operations, suitable insulating floors, mats or platforms shall be provided on which the operator must stand while handling the switches.

[Statutory Authority: RCW 49.17.010, 49.17.040, 49.17.050, 49.17.060. 04-18-080, § 296-24-980, filed 8/31/04, effective 11/1/04. Statutory Authority: RCW 49.17.010, [49.17].040, and [49.17].050. 01-11-038, § 296-24-980, filed 5/9/01, effective 9/1/01. Statutory Authority: Chapter 49.17 RCW. 91-24-017 (Order 91-07), § 296-24-980, filed 11/22/91, effective 12/24/91.]

WAC 296-24-985 Use of equipment. (1) Portable electric equipment. This section applies to the use of cord- and plug-connected equipment, including flexible cord sets (extension cords).

(a) Handling. Portable equipment shall be handled in a manner which will not cause damage. Flexible electric cords connected to equipment shall not be used for raising or lowering the equipment. Flexible cords shall not be fastened with staples or otherwise hung in such a fashion as could damage the outer jacket or insulation.

(b) Visual inspection.

(i) Portable cord- and plug-connected equipment and flexible cord sets (extension cords) shall be visually inspected before use on any shift for external defects (such as loose parts, deformed and missing pins, or damage to outer jacket or insulation) and for evidence of possible internal damage (such as pinched or crushed outer jacket). Cord- and plug-connected equipment and flexible cord sets (extension cords) which remain connected once they are put in place and

are not exposed to damage need not be visually inspected until they are relocated.

(ii) If there is a defect or evidence of damage that might expose an employee to injury, the defective or damaged item shall be removed from service, and no employee shall use it until repairs and tests necessary to render the equipment safe have been made.

(iii) When an attachment plug is to be connected to a receptacle (including any on a cord set), the relationship of the plug and receptacle contacts shall first be checked to ensure they are of proper mating configurations.

(c) Grounding-type equipment.

(i) A flexible cord used with grounding-type equipment shall contain an equipment grounding conductor.

(ii) Attachment plugs and receptacles shall not be connected or altered in a manner which would prevent proper continuity of the equipment grounding conductor at the point where plugs are attached to receptacles. Additionally, these devices shall not be altered to allow the grounding pole of a plug to be inserted into slots intended for connection to the current-carrying conductors.

(iii) Adapters which interrupt the continuity of the equipment grounding connection shall not be used.

(d) Conductive work locations. Portable electric equipment and flexible cords used in highly conductive work locations (such as those inundated with water or other conductive liquids), or in job locations where employees are likely to contact water or conductive liquids, shall be approved for those locations.

(e) Connecting attachment plugs.

(i) Employees' hands shall not be wet when plugging and unplugging flexible cords and cord- and plug-connected equipment, if energized equipment is involved.

(ii) Energized plug and receptacle connections shall be handled only with insulating protective equipment if the condition of the connection could provide a conducting path to the employee's hand (if, for example, a cord connector is wet from being immersed in water).

(iii) Locking-type connectors shall be properly secured after connection.

(2) Electric power and lighting circuits.

(a) Routine opening and closing of circuits. Load rated switches, circuit breakers, or other devices specifically designed as disconnecting means shall be used for the opening, reversing, or closing of circuits under load conditions. Cable connectors not of the load-break type, fuses, terminal lugs, and cable splice connections shall not be used for such purposes, except in an emergency.

(b) Reclosing circuits after protective device operation. After a circuit is deenergized by a circuit protective device, the circuit shall not be manually reenergized until it has been determined that the equipment and circuit can be safely energized. The repetitive manual reclosing of circuit breakers or reenergizing circuits through replaced fuses is prohibited.

Note: When it can be determined from the design of the circuit and the overcurrent devices involved that the automatic operation of a device was caused by an overload rather than a fault condition, no examination of the circuit or connected equipment is needed before the circuit is reenergized.

(c) Overcurrent protection modification. Overcurrent protection of circuits and conductors shall not be modified, even on a temporary basis, beyond that allowed by chapter 296-24 WAC Part L the installation safety requirements for overcurrent protection.

(3) Test instruments and equipment.

(a) Use. Only qualified persons shall perform testing work on electric circuits or equipment.

(b) Visual inspection. Test instruments and equipment and all associated test leads, cables, power cords, probes, and connectors shall be visually inspected for external defects and damage before the equipment is used. If there is a defect or evidence of damage that might expose an employee to injury, the defective or damaged item shall be removed from service, and no employee shall use it until necessary repairs and tests to render the equipment safe have been made.

(c) Rating of equipment. Test instruments and equipment and their accessories shall be rated for the circuits and equipment to which they will be connected and shall be designed for the environment in which they will be used.

(4) Occasional use of flammable or ignitible materials. Where flammable materials are present only occasionally, electric equipment capable of igniting them shall not be used, unless measures are taken to prevent hazardous conditions from developing. Such materials include, but are not limited to: Flammable gases, vapors, or liquids; combustible dust; and ignitible fibers or flyings.

Note: Electrical installation requirements for locations where flammable materials are present on a regular basis are contained in WAC 296-24-95613.

[Statutory Authority: Chapter 49.17 RCW. 91-24-017 (Order 91-07), § 296-24-985, filed 11/22/91, effective 12/24/91.]