Chapter 246-272A WAC
ON-SITE SEWAGE SYSTEMS

WAC

PURPOSE AND ADMINISTRATION

246-272A-0001 Purpose, objectives, and authority.
246-272A-0005 Administration.
246-272A-0010 Definitions.
246-272A-0015 Local management and regulation.

GENERAL REQUIREMENTS

246-272A-0020 Applicability.
246-272A-0025 Connection to public sewer system.

SEWAGE PRODUCTS AND TECHNOLOGIES

246-272A-0100 Sewage technologies.
246-272A-0110 Proprietary treatment products—Certification and registration.
246-272A-0120 Proprietary treatment product registration—Process and requirements.
246-272A-0125 Transition from the list of approved systems and products to the registered list—Treatment products.
246-272A-0130 Bacteriological reduction.
246-272A-0135 Transition from the list of approved systems and products to the registered list—Bacteriological reduction.
246-272A-0140 Proprietary distribution products—Certification and registration.
246-272A-0145 Proprietary distribution product registration—Process and requirements.
246-272A-0150 Transition from the list of approved systems and products to the registered list—Distribution products.
246-272A-0170 Product development permits.
246-272A-0175 Transition from the experimental system program to application for product registration.

SPECIFIC REQUIREMENTS

246-272A-0200 Permit requirements.
246-272A-0210 Location.
246-272A-0220 Soil and site evaluation.
246-272A-0230 Design requirements—General.
246-272A-0232 Design requirements—Septic tank sizing.
246-272A-0234 Design requirements—Soil dispersal components.
246-272A-0238 Design requirements—Facilitate operation, monitoring and maintenance.
246-272A-0240 Holding tank sewage systems.
246-272A-0250 Installation.
246-272A-0260 Inspection.
246-272A-0265 Record drawings.
246-272A-0270 Operation, monitoring, and maintenance—Owner responsibilities.
246-272A-0275 Operation, monitoring, and maintenance—Food service establishments.
246-272A-0280 Repair of failures.
246-272A-0290 Expansions.
246-272A-0300 Abandonment.
246-272A-0310 Septage management.
246-272A-0320 Developments, subdivisions, and minimum land area requirements.
246-272A-0340 Certification of installers, pumpers, and maintenance service providers.
246-272A-0400 Technical advisory committee.
246-272A-0410 Policy advisory committee.
246-272A-0420 Waiver of state regulations.
246-272A-0425 Required rule review.
246-272A-0430 Enforcement.
246-272A-0440 Notice of decision—Adjudicative proceeding.
246-272A-0450 Severability.

DISPOSITION OF SECTIONS FORMERLY CODIFIED IN THIS CHAPTER

246-272A-990 Fees. [Statutory Authority: RCW 43.70.110 and 43.70.250. WSR 06-20-078, § 246-272A-990, filed 10/2/06, effective 1/1/07. Statutory Authority: RCW 43.20.050. WSR 05-15-119, § 246-272A-990, filed 7/18/05, effective 9/15/05.] Repealed by WSR 10-16-108, filed 8/2/10, effective 9/2/10. Statutory Authority: RCW 43.70.110, 43.70.250, 43.20B.020, and 2010 c 37. Later promulgation, see chapter 246-272 WAC.

PURPOSE AND ADMINISTRATION

WAC 246-272A-0001 Purpose, objectives, and authority. (1) The purpose of this chapter is to protect the public health by minimizing:

(a) The potential for public exposure to sewage from on-site sewage systems; and

(b) Adverse effects to public health that discharges from on-site sewage systems may have on ground and surface waters.

(2) This chapter regulates the location, design, installation, operation, maintenance, and monitoring of on-site sewage systems to:

(a) Achieve effective long-term sewage treatment and effluent dispersal; and

(b) Limit the discharge of contaminants to waters of the state.

(3) The state board of health is authorized under RCW 43.20.050 to establish minimum requirements for the department of health and local boards of health, and consistent with RCW 43.70.310 integrating the preservation of public health with protection of the environment in order to endorse policies in common.

(4) This chapter is intended to coordinate with other applicable statutes and rules for the design of on-site sewage systems under chapter 18.210 RCW and chapter 196-33 WAC.

(5) This chapter is intended to coordinate with other applicable statutes for land use planning under chapters 36.70 and 36.70A RCW, and the statutes for subdivision of land under chapter 58.17 RCW.

[Statutory Authority: RCW 43.20.050. WSR 05-15-119, § 246-272A-0001, filed 7/18/05, effective 9/15/05.]

WAC 246-272A-0005 Administration. The local health officers and the department shall administer this chapter under the authority and requirements of chapters 70.05, 70.08, 70.118, 70.46, and 43.70 RCW. RCW 70.05.060(7) authorizes local health officers to charge fees for the administration of this chapter.

[Statutory Authority: RCW 43.20.050. WSR 05-15-119, § 246-272A-0005, filed 7/18/05, effective 9/15/05.]

WAC 246-272A-0010 Definitions. (1) Acronyms used in this chapter:

"ANSI" means American National Standards Institute.

"BOD" means biochemical oxygen demand, typically expressed in mg/L.

"$CBOD_5$" means carbonaceous biochemical oxygen demand, typically expressed in mg/L.

"FC" means fecal coliform, typically expressed in number colonies/100 ml.

"LOSS" means a large on-site sewage system (see chapter 246-272B WAC).

"NSF" means National Sanitation Foundation International.

"O&G" (formerly referred to as FOG) means oil and grease, a component of sewage typically originating from food stuffs (animal fats or vegetable oils) or consisting of compounds of alcohol or glycerol with fatty acids (soaps and lotions). Typically expressed in mg/L.

"OSS" means on-site sewage system.

"RS&G" means recommended standards and guidance.

"SSAS" means a subsurface soil absorption system.

"TAC" means the technical advisory committee established in WAC 247-272A-0400.

"TN" means total nitrogen, typically expressed in mg/L.

"TSS" means total suspended solids, a measure of all suspended solids in a liquid, typically expressed in mg/L.

"USEPA" means United States Environmental Protection Agency.

(2) Definitions used in this chapter:

"Additive" means a commercial product added to an on-site sewage system intended to affect the performance or aesthetics of an on-site sewage system.

"Approved" means a written statement of acceptability issued by the local health officer or the department.

"Bed" means a soil dispersal component consisting of an excavation with a width greater than three feet.

"Building sewer" means that part of the horizontal piping of a drainage system extending from the building drain, which collects sewage from all the drainage pipes inside a building, to an on-site sewage system. It begins two feet outside the building wall and conveys sewage from the building drain to the remaining portions of the on-site sewage system.

"Cesspool" means a pit receiving untreated sewage and allowing the liquid to seep into the surrounding soil or rock.

"Conforming system" means any on-site sewage system or component, meeting any of the following criteria:

(a) In full compliance with new construction requirements under this chapter; or

(b) Approved, installed and operating in accordance with requirements of previous editions of this chapter; or

(c) Permitted by the waiver process under WAC 246-272A-0420 that assures public health protection by higher treatment performance or other methods.

"Cover material" means soil placed over a soil dispersal component composed predominately of mineral material with no greater than ten percent organic content. Cover material may contain an organic surface layer for establishing a vegetative landscape to reduce soil erosion.

"Cuts and/or banks" means any naturally occurring or artificially formed slope greater than one hundred percent (forty-five degrees) and extending vertically at least five feet from the toe of the slope to the top of the slope as follows:

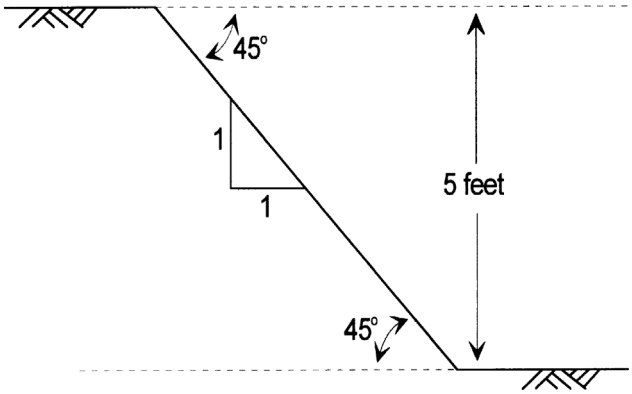

"Department" means the Washington state department of health.

"Designer" means a person who matches site and soil characteristics with appropriate on-site sewage technology. Throughout this chapter this term applies to both on-site sewage treatment system designers licensed under chapter 18.210 RCW and professional engineers licensed under chapter 18.43 RCW.

"Design flow" means the maximum volume of sewage a residence, structure, or other facility is estimated to generate in a twenty-four-hour period. It incorporates both an operating capacity and a surge capacity for the system during periodic heavy use events. The sizing and design of the on-site sewage system components are based on the design flow.

"Development" means the creation of a residence, structure, facility, subdivision, site, area, or similar activity resulting in the production of sewage.

"Disinfection" means the process of destroying pathogenic microorganisms in sewage through the application of ultraviolet light, chlorination, or ozonation.

"Distribution technology" means any arrangement of equipment and/or materials that distributes sewage within an on-site sewage system.

"Drain field" see subsurface soil absorption system (SSAS) and soil dispersal component.

"Drainrock" means clean washed gravel or crushed rock ranging in size from three-quarters inch to two and one-half inches, and containing no more than two percent by weight passing a US No. 8 sieve and no more than one percent by weight passing a US No. 200 sieve.

"Effluent" means liquid discharged from a septic tank or other on-site sewage system component.

"Expanding clay" means a clay soil with the mineralogy of clay particles, such as those found in the Montmorillonite/Smectite Group, which causes the clay particles to expand when they absorb water, closing the soil pores, and contract when they dry out.

"Expansion" means a change in a residence, facility, site, or use that:

(a) Causes the sewage quantity or quality to exceed the existing design flow of the on-site system, for example, when a residence is increased from two to three bedrooms or a change in use from an office to a restaurant; or

(b) Reduces the treatment or dispersal capability of the existing on-site sewage system or the reserve area, for example, when a building is placed over a reserve area.

"Extremely gravelly" means soil with sixty percent or more, but less than ninety percent rock fragments by volume.

"Failure" means a condition of an on-site sewage system or component that threatens the public health by inadequately treating sewage or by creating a potential for direct or indirect contact between sewage and the public. Examples of failure include:

(a) Sewage on the surface of the ground;

(b) Sewage backing up into a structure caused by slow soil absorption of septic tank effluent;

(c) Sewage leaking from a sewage tank or collection system;

(d) Cesspools or seepage pits where evidence of groundwater or surface water quality degradation exists;

(e) Inadequately treated effluent contaminating groundwater or surface water; or

(f) Noncompliance with standards stipulated on the permit.

"Fecal coliform" means bacteria common to the digestive systems of warm-blooded animals that are cultured in standard tests. Counts of these organisms are typically used to indicate potential contamination from sewage or to describe a level of needed disinfection. Generally expressed as colonies per 100 ml.

"Gravelly" means soils with fifteen percent or more, but less than thirty-five percent rock fragments by volume.

"Gray water" means sewage from bathtubs, showers, bathroom sinks, washing machines, dishwashers, and kitchen sinks. It includes sewage from any source in a residence or structure that has not come into contact with toilet wastes.

"Groundwater" means subsurface water occupying the zone of saturated soil, permanently, seasonally, or as the result of the tides. Indications of groundwater may include:

(a) Water seeping into or standing in an open excavation from the soil surrounding the excavation or monitoring ports.

(b) Spots or blotches of different color or shades of color interspersed with a dominant color in soil, caused by reduction and oxidation of iron. These color patterns are redoximorphic features, commonly referred to as mottling. Redoximorphic features often indicate the intermittent presence of groundwater and may indicate poor aeration and impeded drainage. Also see "water table."

"Holding tank sewage system" means an on-site sewage system which incorporates a sewage tank without a discharge outlet, the services of a sewage pumper/hauler, and the offsite treatment and disposal for the sewage generated.

"Hydraulic loading rate" means the amount of effluent applied to a given treatment step, in this chapter expressed as gallons per square foot per day (gal/sq.ft./day).

"Industrial wastewater" means the water or liquid carried waste from an industrial process. These wastes may result from any process or activity of industry, manufacture, trade or business, from the development of any natural resource, or from animal operations such as feedlots, poultry houses, or dairies. The term includes contaminated storm water and leachate from solid waste facilities.

"Infiltrative surface" means the surface within a treatment component or soil dispersal component to which effluent is applied and through which effluent moves into original, undisturbed soil or other porous treatment media.

"Installer" means a person approved by the local health officer to install on-site sewage systems or components.

"Local health officer" means the health officer of the city, county, or city-county health department or district within the state of Washington, or a representative authorized by and under the direct supervision of the local health officer, as defined in chapter 70.05 RCW.

"Maintenance" means the actions necessary to keep the on-site sewage system components functioning as designed.

"Massive structure" means the condition of a soil layer in which the layer appears as a coherent or solid mass not separated into peds of any kind.

"Moderate structure" means well-formed distinct peds evident in undisturbed soil. When disturbed, soil material parts into a mixture of whole peds, broken peds, and material that is not in peds.

"Monitoring" means periodic or continuous checking of an on-site sewage system, which is performed by observations and measurements, to determine if the system is functioning as intended and if system maintenance is needed. Monitoring also includes maintaining accurate records that document monitoring activities.

"On-site sewage system" (OSS) means an integrated system of components, located on or nearby the property it serves, that conveys, stores, treats, and/or provides subsurface soil treatment and dispersal of sewage. It consists of a collection system, a treatment component or treatment sequence, and a soil dispersal component. An on-site sewage system also refers to a holding tank sewage system or other system that does not have a soil dispersal component.

"Operating capacity" means the average daily volume of sewage an OSS can treat and disperse on a sustained basis. The operating capacity, which is lower than the design flow, is an integral part of the design and is used as an index in OSS monitoring.

"Ordinary high-water mark" means the mark on lakes, streams, springs, and tidal waters, found by examining the beds and banks and ascertaining where the presence and action of waters are so common and usual, and so long continued in all ordinary years, as to mark upon the soil a character distinct from that of the abutting upland with respect to vegetation, as that condition exists on the effective date of this chapter, or as it may naturally change thereafter. The following definitions apply where the ordinary high-water mark cannot be found:

(a) The ordinary high-water mark adjoining marine water is the elevation at mean higher high tide; and

(b) The ordinary high-water mark adjoining freshwater is the line of mean high water.

"Ped" means a unit of soil structure such as blocks, column, granule, plate or prism formed by natural processes.

"Person" means any individual, corporation, company, association, society, firm, partnership, joint stock company, or any governmental agency, or the authorized agents of these entities.

"Planned unit development" means a subdivision characterized by a unified site design, clustered residential units and/or commercial units, and areas of common open space.

"Platy structure" means soil that contains flat peds that lie horizontally and often overlap. This type of structure will impede the vertical movement of water.

"Pressure distribution" means a system of small diameter pipes equally distributing effluent throughout a SSAS, as described in the department's "*Recommended Standards and Guidance for Pressure Distribution Systems*," 2001. A subsurface drip system may be used wherever the chapter requires pressure distribution.

"Professional engineer" means a person who is currently licensed as an engineer under the provisions of chapter 18.43 RCW.

"Proprietary product" means a sewage treatment and distribution technology, method, or material subject to a patent or trademark.

"Public domain technology" means a sewage treatment and distribution technology, method, or material not subject to a patent or trademark.

"Public sewer system" means a sewerage system:

(a) Owned or operated by a city, town, municipal corporation, county, or other approved ownership consisting of a collection system and necessary trunks, pumping facilities and a means of final treatment and disposal; and

(b) Approved by or under permit from the department of ecology, the department of health and/or a local health officer.

"Pumper" means a person approved by the local health officer to remove and transport sewage or septage from on-site sewage systems.

"Record drawing" means an accurate graphic and written record of the location and features of the OSS that are needed to properly monitor, operate, and maintain that system.

"Repair" means the relocation, replacement or reconstruction of a failed on-site sewage system.

"Reserve area" means an area of land approved for the installation of a conforming system that is protected and maintained for replacement of the OSS upon its failure.

"Residential sewage" means sewage having the constituency and strength typical of wastewater from domestic households.

"Restrictive layer" means a stratum impeding the vertical movement of water, air, and growth of plant roots, such as hardpan, claypan, fragipan, caliche, some compacted soils, bedrock and unstructured clay soils.

"Rock fragment" means rock or mineral fragments having a diameter of two millimeters or more; for example, gravel, cobbles, stones, and boulders.

"Seepage pit" means an excavation more than three feet deep where the sidewall of the excavation is designed to dispose of septic tank effluent. Seepage pits may also be called "dry wells."

"Septage" means the mixture of solid wastes, scum, sludge, and liquids pumped from within septic tanks, pump chambers, holding tanks, and other OSS components.

"Septic tank" means a watertight treatment receptacle receiving the discharge of sewage from a building sewer or sewers, designed and constructed to permit separation of settleable and floating solids from the liquid, detention and anaerobic digestion of the organic matter, prior to discharge of the liquid.

"Septic system" see on-site sewage system or OSS.

"Sewage" means any urine, feces, and the water carrying human wastes, including kitchen, bath, and laundry wastes from residences, buildings, industrial establishments or other places.

"Sewage quality" means contents in sewage that include:

(a) $CBOD_5$, TSS, and O&G;

(b) Other parameters that can adversely affect treatment. Examples include pH, temperature, and dissolved oxygen;

(c) Other constituents that create concerns due to specific site sensitivity. Examples include fecal coliform and nitrogen.

"Sewage tank" means a prefabricated or cast-in-place septic tank, pump tank/dosing chamber, holding tank, grease interceptor, recirculating filter tank or any other tanks as they relate to on-site sewage systems including tanks for use with proprietary products.

"Soil dispersal component" means a technology that releases effluent from a treatment component into the soil for dispersal, final treatment and recycling.

"Soil log" means a detailed description of soil characteristics providing information on the soil's capacity to act as an acceptable treatment and dispersal medium for sewage.

"Soil scientist" means a person certified by the American Society of Agronomy as a Certified Professional Soil Scientist.

"Soil type" means one of seven numerical classifications of fine earth particles and rock fragments as described in WAC 246-272A-0220 (2)(e).

"Standard methods" means the *20th Edition of Standard Methods for the Examination of Water and Wastewater*, prepared and published jointly by the American Public Health Association, the American Water Works Association and the Water Environment Federation.

"Strong structure" means peds are distinct in undisturbed soil. They separate cleanly when soil is disturbed, and the soil material separates mainly into whole peds when removed.

"Subdivision" means a division of land or creation of lots or parcels, described under chapter 58.17 RCW, including both long and short subdivisions, planned unit developments, and mobile home parks.

"Subsurface drip system" means an efficient pressurized wastewater distribution system that can deliver small, precise doses of effluent to soil surrounding the drip distribution piping (called dripline) as described in the department's "*Recommended Standards and Guidance for Subsurface Drip Systems*."

"Subsurface soil absorption system" (SSAS) means a soil dispersal component of trenches or beds containing either a distribution pipe within a layer of drainrock covered with a geotextile, or an approved gravelless distribution technology, designed and installed in original, undisturbed, unsaturated soil providing at least minimal vertical separation as established in this chapter, with either gravity or pressure distribution of the treatment component effluent.

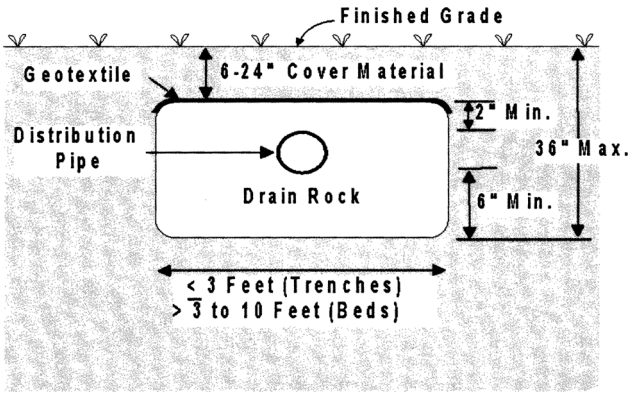

"Surface water" means any body of water, whether fresh or marine, flowing or contained in natural or artificial unlined depressions for significant periods of the year, including natural and artificial lakes, ponds, springs, rivers, streams, swamps, marshes, irrigation canals and tidal waters.

"Timed dosing" means delivery of discrete volumes of sewage at prescribed time intervals.

"Treatment component" means a technology that treats sewage in preparation for further treatment and/or dispersal into the soil environment. Some treatment components, such as mound systems, incorporate a soil dispersal component in lieu of separate treatment and soil dispersal components.

"Treatment level" means one of six levels (A, B, C, D, E, & N) used in these rules to:

(a) Identify treatment component performance demonstrated through requirements specified in WAC 246-272A-0110; and

(b) Match site conditions of vertical separation and soil type with treatment components. Treatment levels used in these rules are not intended to be applied as field compliance standards. Their intended use is for establishing treatment product performance in a product testing setting under established protocols by qualified testing entities.

"Treatment sequence" means any series of treatment components that discharges treated sewage to the soil dispersal component.

"Trench" means a soil dispersal component consisting of an excavation with a width of three feet or less.

"Unit volume of sewage" means:

(a) Flow from a single-family residence;

(b) Flow from a mobile home site in a mobile home park; or

(c) Four hundred fifty gallons of sewage per day where the proposed development is not single-family residences or a mobile home park.

"Vertical separation" means the depth of unsaturated, original, undisturbed soil of soil types 1-6 between the bottom infiltrative surface of a soil dispersal component and the highest seasonal water table, a restrictive layer, or soil type 7 as illustrated below by the profile drawing of subsurface soil absorption systems:

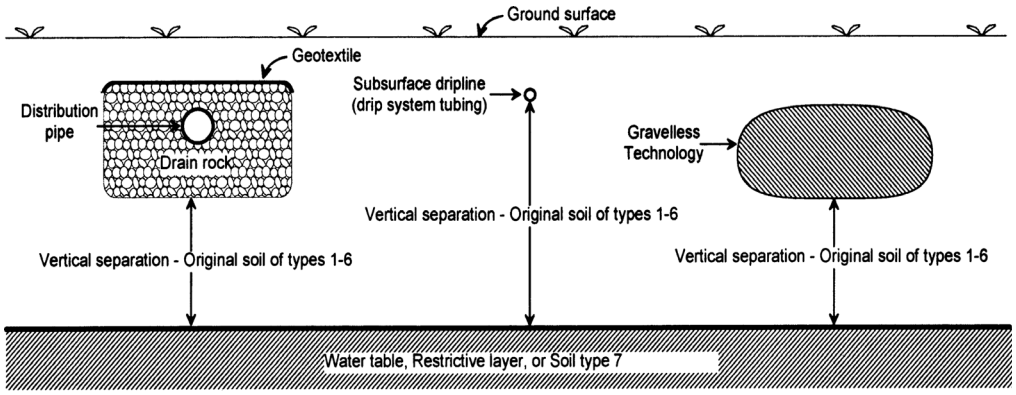

"Very gravelly" means soil containing thirty-five percent or more, but less than sixty percent rock fragments by volume.

"Water table" means the upper surface of the groundwater, whether permanent or seasonal. Also see "groundwater."

"Well" means any excavation that is constructed when the intended use of the well is for the location, diversion, artificial recharge, observation, monitoring, dewatering or withdrawal of groundwater for agricultural, municipal, industrial, domestic, or commercial use. Excluded are:

(a) A temporary observation or monitoring well used to determine the depth to a water table for locating an OSS;

(b) An observation or monitoring well used to measure the effect of an OSS on a water table; and

(c) An interceptor or curtain drain constructed to lower a water table.

[Statutory Authority: RCW 43.20.050. WSR 05-15-119, § 246-272A-0010, filed 7/18/05, effective 9/15/05.]

WAC 246-272A-0015 Local management and regulation. (1) By July 1, 2007, the local health officers of health jurisdictions in the twelve counties bordering Puget Sound shall develop a written plan that will provide guidance to the local health jurisdiction regarding development and management activities for all OSS within the jurisdiction. The plan must specify how the local health jurisdiction will:

(a) Progressively develop and maintain an inventory of all known OSS in operation within the jurisdiction;

(b) Identify any areas where OSS could pose an increased public health risk. The following areas shall be given priority in this activity:

(i) Shellfish protection districts or shellfish growing areas;

(ii) Sole source aquifers designated by the USEPA;

(iii) Areas in which aquifers used for potable water as designated under the Washington State Growth Management Act, chapter 36.70A RCW are critically impacted by recharge;

(iv) Designated wellhead protection areas for Group A public water systems;

(v) Up-gradient areas directly influencing water recreation facilities designated for swimming in natural waters with artificial boundaries within the waters as described by the Water Recreation Facilities Act, chapter 70.90 RCW;

(vi) Areas designated by the department of ecology as special protection areas under WAC 173-200-090, Water quality standards for groundwaters of the state of Washington;

(vii) Wetland areas under production of crops for human consumption;

(viii) Frequently flooded areas including areas delineated by the Federal Emergency Management Agency and or as designated under the Washington State Growth Management Act, chapter 36.70A RCW;

(ix) Areas where nitrogen has been identified as a contaminant of concern; and

(x) Other areas designated by the local health officer.

(c) Identify operation, maintenance and monitoring requirements commensurate with risks posed by OSS within the geographic areas identified in (b) of this subsection;

(d) Facilitate education of homeowners regarding their responsibilities under this chapter and provide operation and maintenance information for all types of systems in use within the jurisdiction;

(e) Remind and encourage homeowners to complete the operation and maintenance inspections required by WAC 246-272A-0270;

(f) Maintain records required under this chapter, including of all operation and maintenance activities as identified; and

(g) Enforce OSS owner permit application, operation, monitoring and maintenance and failure repair requirements defined in WAC 246-272A-0200(1), 246-272A-0270, 246-272A-0275, and 246-272A-0280 (1) and (2);

(h) Describe the capacity of the local health jurisdiction to adequately fund the local OSS plan, including the ability to find failing and unknown systems; and

(i) Assure that it was developed to coordinate with the comprehensive land use plan of the entities governing development in the health officer's jurisdiction.

(2) After being approved by the local board of health following a public hearing, the local health officers required to develop a written plan under subsection (1) of this section shall:

(a) Supply a copy of the plan to the department;

(b) Supply a copy of the plan to the entities responsible for land use planning and development regulations in the health officer's jurisdiction; and

(c) Implement the plan described in subsection (1) of this section.

(3) The plans of local health jurisdictions required to develop a written plan under subsection (1) of this section shall be submitted to the department by July 1, 2007, and shall be reviewed to ensure the elements described in subsection (1) of this section have been addressed. The department shall provide in writing to the local board of health its review of the completeness of the plan.

(4) For purposes of this chapter, the local health jurisdictions in marine counties are Clallam, Island, Kitsap, Jefferson, Mason, San Juan, Seattle-King, Skagit, Snohomish, Tacoma-Pierce, Thurston and Whatcom.

(5) The local health officers for all other jurisdictions not required to develop a written plan under subsection (1) of this section shall develop a written plan that will provide guidance to the local jurisdiction regarding development and management activities for all OSS within the jurisdiction. At a minimum the plan shall include:

(a) A description of the capacity of the local health jurisdiction to provide education and operation and maintenance information for all types of systems in use within the jurisdiction;

(b) A description of how the local health officer will remind and encourage homeowners to complete the operation and maintenance inspection required by WAC 246-272A-0270; and

(c) A description of the capacity of the local health jurisdiction to adequately fund the local OSS plan.

(6) In order to implement the plan described in subsections (1) and (5) of this section, the local health officer shall require the owner of the OSS to:

(a) Comply with additional requirements identified in the plan for the location, design, or performance; and

(b) Comply with the conditions of the operational permit if one is required.

(7) In order to implement the plan described in subsections (1) and (5) of this section, the local health officer may require the owner of the OSS to:

(a) Ensure additional maintenance and monitoring of the OSS;

(b) Provide dedicated easements for inspections, maintenance, and potential future expansion of the OSS;

(c) Place a notice to title identifying any additional requirements for OSS operation, maintenance and monitoring; and

(d) Have an inspection of the OSS at the time of property transfer including the preparation of a "record drawing" if necessary.

(8) No later than July 1, 2006, the department shall develop guidance on local management programs to assist marine local health jurisdictions in plan development.

(9) Until such time as the local board of health decides to adopt its own rules, the local health officer shall enforce this chapter. Local boards of health may adopt and enforce local rules and regulations governing on-site sewage systems when the local regulations are:

(a) Consistent with, and at least as stringent as, this chapter; and

(b) Approved by the department prior to the effective date of local regulations.

(10) A local board of health shall apply for departmental approval of local regulations by initiating the following procedure:

(a) The local board shall submit the proposed local regulations to the department.

(b) Within ninety days of receipt, the department shall:

(i) Approve the regulation in writing; or

(ii) Signify automatic tacit approval with the local regulations and permitting local implementation by failing to act; or

(iii) Deny approval of the regulations. If the department determines local regulations are not consistent with this chapter, the department shall provide specific reasons for denial.

(11) Upon receipt of departmental approval or after ninety days without notification, whichever comes first, the local board may implement adopted regulations. The local board shall provide a copy of the adopted local regulations to the department.

(12) If the department denies approval of local regulations, the local board of health may:

(a) Resubmit revised regulations for departmental consideration; or

(b) Submit a written request for a review of the departmental denial within one hundred twenty days from the date the local board of health receives the written reasons for the denial.

(13) Upon receipt of written request for review of the departmental denial, the department shall:

(a) Acknowledge the receipt of the request in writing; and

(b) Form a mutually acceptable advisory panel consisting of:

(i) One departmental employee;

(ii) One employee from a local health jurisdiction other than that which requested the review; and

(iii) One member of the technical advisory committee.

(14) If good faith efforts to reach agreement are unsuccessful, the local board of health may appeal the denial to the Washington state board of health for resolution.

(15) Nothing in this chapter shall prohibit the adoption and enforcement of more stringent regulations by local health departments.

(16) In the plan required in subsection (1) of this section and in local regulations, the local health officer may address water conservation and include options for the nonpotable reuse of gray water. Any treatment and dispersal of gray water outside the residence or structure must comply with this chapter.

[Statutory Authority: RCW 43.20.050. WSR 05-15-119, § 246-272A-0015, filed 7/18/05, effective 9/15/05.]

GENERAL REQUIREMENTS

WAC 246-272A-0020 Applicability. (1) The local health officer:

(a) Shall apply this chapter to OSS treating sewage and dispersing effluent from residential sources with design flows up to three thousand five hundred gallons per day;

(b) May apply this chapter to OSS for nonresidential sources of sewage if treatment, siting, design, installation, and operation and maintenance measures provide treatment and effluent dispersal equal to that required of residential sources.

(c) May not apply this chapter to industrial wastewater.

(2) The department shall apply this chapter for the registration of proprietary treatment and distribution products.

(3) A valid sewage system design approval, or installation permit issued prior to the effective date of these regulations:

(a) Shall be acted upon in accordance with regulations in force at the time of issuance;

(b) Shall have a maximum validity period of five years from the date of issuance or remain valid for an additional year beyond the effective date of these regulations, whichever assures the most lenient expiration date; and

(c) May be modified to include additional requirements if the health officer determines that a serious threat to public health exists.

(4) This chapter does not apply to facilities regulated as reclaimed water use under chapter 90.46 RCW.

[Statutory Authority: RCW 43.20.050. WSR 05-15-119, § 246-272A-0020, filed 7/18/05, effective 9/15/05.]

WAC 246-272A-0025 Connection to public sewer system. (1) When adequate public sewer services are available within two hundred feet of the residence or facility, the local health officer, upon the failure of an existing on-site sewage system may:

(a) Require hook-up to a public sewer system; or

(b) Permit the repair or replacement of the on-site sewage system only if a conforming system can be designed and installed.

(2) Except as noted in subsection (1) of this section, the owner of a failure shall abandon the OSS under WAC 246-272A-0300 and connect the residence or other facility to a public sewer system when:

(a) The distance between the residence or other facility and an adequate public sewer is two hundred feet or less as measured along the usual or most feasible route of access; and

(b) The sewer utility allows the sewer connection.

(3) The owner of a residence or other facility served by a system meeting the requirements of Table IX of this chapter shall abandon the OSS according to the requirements specified in WAC 246-272A-0300, and connect the residence or other facility to a public sewer system when:

(a) Connection is deemed necessary to protect public health by the local health officer;

(b) An adequate public sewer becomes available within two hundred feet of the residence or other facility as measured along the usual or most economically feasible route of access; and

(c) The sewer utility allows the sewer connection.

(4) Local boards of health may require a new development to connect to a public sewer system to protect public health.

(5) Local boards of health shall require new development or a development with a failing system to connect to a public sewer system if it is required by the comprehensive land use plan or development regulations.

[Statutory Authority: RCW 43.20.050. WSR 05-15-119, § 246-272A-0025, filed 7/18/05, effective 9/15/05.]

SEWAGE PRODUCTS AND TECHNOLOGIES

WAC 246-272A-0100 Sewage technologies. (1) The department may develop recommended standards and guidance to assist local health officers in permitting different types of sewage treatment and distribution technologies including the following four broad categories:

(a) Public domain treatment technologies (e.g., sand filters);

(b) Proprietary treatment products (e.g., aerobic treatment systems and packed bed filters);

(c) Public domain distribution technologies (e.g., gravel or generic gravel substitutes, gravity and pressure distribution methods and materials);

(d) Proprietary distribution products (e.g., subsurface dripline products or gravelless distribution products).

(2) All types of sewage technologies must have either standards for use described in this chapter or departmental recommended standards and guidance before the local health officer may permit them. Recommended standards and guidance may include information and detail such as:

(a) Application;

(b) Design;

(c) Installation;

(d) Operation, monitoring and maintenance;

(e) Performance expectations; and

(f) Sources of information.

[Statutory Authority: RCW 43.20.050. WSR 05-15-119, § 246-272A-0100, filed 7/18/05, effective 9/15/05.]

WAC 246-272A-0110 Proprietary treatment products—Certification and registration. (1) Manufacturers shall register their proprietary treatment products with the department before the local health officer may permit their use.

(2) To qualify for product registration, manufacturers desiring to sell or distribute proprietary treatment products in Washington state shall:

(a) Verify product performance through testing using the testing protocol established in Table I and register their product with the department using the process described in WAC 246-272-0120;

(b) Report test results of influent and effluent sampling obtained throughout the testing period (including normal and stress loading phases) for evaluation of constituent reduction according to Table II;

(c) Demonstrate product performance according to Table III. All thirty-day averages and geometric means obtained throughout the test period must meet the identified threshold values to qualify for registration at that threshold level; and

(d) For registration at levels A, B, and C verify bacteriological reduction according to WAC 246-272A-0130.

(3) Manufacturers verifying product performance through testing according to the following standards or protocols shall have product testing conducted by a testing facility accredited by ANSI:

(a) ANSI/NSF Standard 40—Residential Wastewater Treatment Systems;

(b) NSF Standard 41: Non-Liquid Saturated Treatment Systems;

(c) NSF Protocol P157 Electrical Incinerating Toilets - Health and Sanitation; or

(d) Protocol for bacteriological reduction described in WAC 246-272A-0130.

(4) Manufacturers verifying product performance through testing according to the following standards or protocols shall have product testing conducted by a testing facility meeting the requirements established by the Testing Organization and Verification Organization, consistent with the test protocol and plan:

(a) EPA/NSF—Protocol for the Verification of Wastewater Treatment Technologies; or

(b) EPA Environmental Technology Verification Program protocol for the Verification of Residential Wastewater Treatment Technologies for Nutrient Reduction.

(5) Treatment levels used in these rules are not intended to be applied as field compliance standards. Their intended use is for establishing treatment product performance in a product testing setting under established protocols by qualified testing entities.

TABLE I

Testing Requirements for Proprietary Treatment Products	
TreatmentComponent/ Sequence Category	**Required Testing Protocol**
Category 1 Designed to treat sewage with strength typical of a residential source when septic tank effluent is anticipated to be equal to or less than treatment level E.	ANSI/NSF 40—Residential Wastewater Treatment Systems (protocols dated between July 1996 and the effective date of these rules)
Category 2 Designed to treat high-strength sewage when septic tank effluent is anticipated to be greater than treatment level E. (Such as at restaurants, grocery stores, mini-marts, group homes, medical clinics, residences, etc.)	EPA/NSF Protocol for the Verification of Wastewater Treatment Technologies/ EPA Environmental Technology Verification (April 2001)
Category 3 Black water component of residential sewage (such as composting and incinerating toilets).	NSF/ANSI Standard 41: Non-Liquid Saturated Treatment Systems (September 1999) NSF Protocol P157 Electrical Incinerating Toilets - Health and Sanitation (April 2000)
Total Nitrogen Reduction in Categories 1 & 2 (Above)	Protocol for the Verification of Residential Wastewater Treatment Technologies for Nutrient Reduction/EPA Environmental Technology Verification Program (November, 2000)

TABLE II

Test Results Reporting Requirements for Proprietary Treatment Products	
Treatment Component/ Sequence Category	**Testing Results Reported**
Category 1 Designed to treat sewage with strength typical of a residential source when septic tank effluent is anticipated to be equal to or less than treatment level E.	Report test results of influent and effluent sampling obtained throughout the testing period for evaluation of constituent reduction for the parameters: $CBOD_5$, and TSS: □ Average □ Standard Deviation □ Minimum □ Maximum □ Median □ Interquartile Range □ 30-day Average (for each month)
	For bacteriological reduction performance, report fecal coliform test results of influent and effluent sampling by geometric mean from samples drawn within thirty-day or monthly calendar periods, obtained from a minimum of three samples per week throughout the testing period. See WAC 246-272A-0130. Test report must also include the individual results of all samples drawn throughout the test period.
Category 2 Designed to treat high-strength sewage when septic tank effluent is anticipated to be greater than treatment level E. (Such as at restaurants, grocery stores, mini-marts, group homes, medical clinics, residences, etc.)	Report all individual test results and full test average values of influent and effluent sampling obtained throughout the testing period for: $CBOD_5$, TSS and O&G. Establish the treatment capacity of the product tested in pounds per day for $CBOD_5$.
Category 3 Black water component of residential sewage (such as composting and incinerating toilets).	Report test results on all required performance criteria according to the format prescribed in the NSF test protocol described in Table I.
Total Nitrogen Reduction in Categories 1 & 2 (Above)	Report test results on all required performance criteria according to the format prescribed in the test protocol described in Table I.

TABLE III

Product Performance Requirements for Proprietary Treatment Products						
TreatmentComponent/ Sequence Category	**Product Performance Requirements**					
Category 1 Designed to treat sewage with strength typical of a residential source when septic tank effluent is anticipated to be equal to or less than treatment level E.	**Treatment System Performance Testing Levels**					
	Level	**Parameters**				
		$CBOD_5$	**TSS**	**O&G**	**FC**	**TN**
	A	10 mg/L	10 mg/L	——	200/100 ml	——
	B	15 mg/L	15 mg/L	——	1,000/100 ml	——
	C	25 mg/L	30 mg/L	——	50,000/100 ml	——
	D	25 mg/L	30 mg/L	——	——	——
	E	125 mg/L	80 mg/L	20 mg/L	——	——
	N	——	——	——	——	20 mg/L
	Values for Levels A - D are 30-day values (averages for $CBOD_5$, TSS, and geometric mean for FC.) All 30-day averages throughout the test period must meet these values in order to be registered at these levels. Values for Levels E and N are derived from full test averages.					
Category 2 Designed to treat high-strength sewage when septic tank effluent is anticipated to be greater than treatment level E.	All of the following requirements must be met:					

Product Performance Requirements for Proprietary Treatment Products	
TreatmentComponent/ Sequence Category	**Product Performance Requirements**
(Such as at restaurants, grocery stores, mini-marts, group homes, medical clinics, residences, etc.)	(1) All full test averages must meet Level E; and (2) Establish the treatment capacity of the product tested in pounds per day for $CBOD_5$.
Category 3 Black water component of residential sewage (such as composting and incinerating toilets).	Test results must meet the performance requirements established in the NSF test protocol.
Total Nitrogen Reduction in Categories 1 & 2 (Above)	Test results must establish product performance effluent quality meeting Level N, when presented as the full test average.

[Statutory Authority: RCW 43.20.050. WSR 05-15-119, § 246-272A-0110, filed 7/18/05, effective 9/15/05.]

WAC 246-272A-0120 Proprietary treatment product registration—Process and requirements. (1) Manufacturers shall register their proprietary treatment product(s) with the department by submitting a complete application in the format provided by the department, including:

(a) Manufacturer's name, mailing address, street address and phone number;

(b) Contact individual's name, mailing address, street address, and phone number. The contact individual must be vested with the authority to represent the manufacturer in this capacity;

(c) Name, including specific brand and model, of the proprietary treatment product;

(d) A description of the function of the proprietary treatment product along with any known limitation on the use of the product;

(e) Product description and technical information, including process flow drawings and schematics; materials and characteristics; component design specifications; design capacity, volumes and flow assumptions and calculations; components; dimensioned drawings and photos;

(f) For treatment systems in Category 2, daily capacity of the model or models in pounds per day of $CBOD_5$;

(g) Siting and installation requirements;

(h) Detailed description, procedure and schedule of routine service and system maintenance events;

(i) Estimated operational costs for the first five years of the treatment component's life. This shall include both estimated annual electricity costs, and routine maintenance costs, including replacement of parts;

(j) Identification of information subject to protection from disclosure of trade secrets;

(k) Copies of product brochures & manuals: *Sales & Promotional; Design; Installation; Operation & Maintenance; and Homeowner Instructions*;

(l) The most recently available product test protocol and results report;

(m) A signed and dated certification by the manufacturer's agent specifically including the following statement, "I certify that I represent (INSERT MANUFACTURING COMPANY NAME) and I am authorized to prepare or direct the preparation of this application for registration. I attest, under penalty of law, that this document and all attachments are true, accurate, and complete. I understand and accept that the product testing results reported with this application for registration are the parameters and values to be used for determining conformance with Treatment System Performance Testing Levels established in chapter 246-272A WAC";

(n) A signed and dated certification from the testing entity including the statement, "I certify that I represent (INSERT TESTING ENTITY NAME), that I am authorized to report the testing results for this proprietary treatment product. I attest, under penalty of law, that the report about the test protocol and results is true, accurate, and complete"; and

(o) The fee described in WAC 246-272A-990.

(2) Products within a single series or model line (sharing distinct similarities in design, materials, and capacities) may be registered under a single application, consistent with the provisions of their test protocol for the certification of other products within a product series. Products outside of the series or model line must be registered under separate applications.

(3) Upon receipt of an application the department shall:

(a) Verify that the application is complete;

(b) If complete, place the product on the list of proprietary treatment products.

(4) All registrations are valid for up to one year, expiring on December 31 of each year. Fees are not prorated.

(5) In order to renew technology registration, a manufacturer shall:

(a) Apply for renewal of product registration using the form or in the format provided by the department.

(b) Submit the results of retesting, if the product has completed retesting according to the protocol required for registration and a report from the testing entity has been issued since initial registration or previous renewal. Renewal shall be based on the most recent test results.

(c) Provide an affidavit to the department verifying whether or not the product has changed over the previous year. If the product has changed, the affidavit must also include a full description of the changes. If the product has changed in a way that affects performance, the product may not be renewed and shall meet the requirements for initial registration.

(d) Submit the fee established in WAC 246-272A-990.

(6) As part of product registration renewal, the department shall:

(a) Request field assessment comments from local health officers no later than October 31st of each year. These comments may include concerns about a variety of field assessment issues, including product function, product reliability, and problems arising with operation and maintenance;

(b) Discuss with the TAC any field assessment information that may impact product registration renewal;

(c) Notify the manufacturer of any product to be discussed with the TAC, prior to discussion with the TAC, regarding the nature of comments received; and

(d) Renew the product registration unless:

(i) The manufacturer of a product does not apply for renewal; or

(ii) The department, after deliberation with the TAC, concludes product registration renewal should not be given or should be delayed until the manufacturer submits information that satisfactorily answers concerns and issues.

(7) The department shall maintain a list of proprietary treatment products meeting the registration requirements established in this chapter. The product registration is a condition of approval for use.

(8) Manufacturers shall have readily accessible information for designers, homeowners, regulators, system owners and other interested parties about their product including:

(a) Product manuals;

(b) Design instructions;

(c) Installation instructions;

(d) Operation and maintenance;

(e) Homeowner instructions; and

(f) A list of representatives and manufacturer certified service providers, if any.

[Statutory Authority: RCW 43.20.050. WSR 05-15-119, § 246-272A-0120, filed 7/18/05, effective 9/15/05.]

WAC 246-272A-0125 Transition from the list of approved systems and products to the registered list—Treatment products. (1) The department's list of approved systems and products shall:

(a) Become static on September 15, 2005. Subsequent changes, additions or deletions to the list of approved systems and products will only be made if approved by the department based on completed applications received prior to September 15, 2005.

(b) Remain in effect until March 15, 2007.

(2) Treatment products not on the department's list of approved systems and products on September 15, 2005, and not otherwise eligible for inclusion on the list by submittal of a completed application prior to September 15, 2005, must be registered with the department according to the requirements of this chapter before being permitted by the local health officer.

(3) Between September 15, 2005, and March 15, 2007, the local health officer may permit treatment products that are on the department's list of approved systems and products or registered with the department under the requirements of this chapter.

(4) After March 15, 2007, local health officers may only permit those treatment products registered under the requirements of this chapter.

(5) In order to be registered, manufacturers with treatment product models specified on the department's list of approved systems and products (excluding products being evaluated under the experimental systems program) on September 15, 2005, or subsequently added to the list as provided in subsection (1)(a) of this section, shall apply for product registration before March 15, 2007, using the following information:

(a) For treatment products approved for use with sewage typical of a residential source:

(i) If product approval was based on performance test results obtained from testing conducted according to a ANSI/NSF Standard 40 protocol dated prior to July 1996, the manufacturer may apply for registration as established by these rules using the performance test results obtained by a qualified testing facility from testing conducted according to a ANSI/NSF Standard 40 test protocol dated prior to July 1996;

(ii) In order to be registered, manufacturers must identify on their application for product registration if the reported product testing results use an excursion allowance. If an excursion allowance is used, only the excursion allowance provided in 1996 and later NSF protocols may be used;

(iii) Thirty-day averaging of sample results must meet the requirements established in 1996 and later NSF protocols;

(iv) If product approval was based upon the performance information obtained through the department's former experimental systems program, manufacturers may apply for registration under this chapter using the performance test results obtained from their experimental system program. This provision is valid for only those models on the list of approved systems and products;

(b) For products approved for use with high-strength residential or commercial sewage:

(i) Manufacturers may apply for product registration using the performance test results and other information previously provided to the department in support of product approval application.

(ii) If product approval was based upon the performance information obtained through the department's former experimental systems program, manufacturers may apply for registration under this chapter using the performance test results obtained from their experimental system program. This provision is valid for only those models on the list of approved systems and products;

(c) Test results for BOD_5 may be submitted in lieu of test results for $CBOD_5$. In these cases the numerical values for $CBOD_5$, will be determined using the following formula:

(BOD_5 value x .83 = $CBOD_5$ value);

(d) In order to be registered for treatment levels A, B or C, a manufacturer shall provide data demonstrating that each of the parameters ($CBOD_5$, TSS and fecal coliform) is met;

(e) Fecal coliform reduction performance must be demonstrated according to the provisions and requirements established in WAC 246-272A-0130 Bacteriological reduction; and

(f) Manufacturers and treatment products must meet all other requirements established in these rules for product registration.

[Statutory Authority: RCW 43.20.050. WSR 05-15-119, § 246-272A-0125, filed 7/18/05, effective 9/15/05.]

WAC 246-272A-0130 Bacteriological reduction. This section establishes the requirements for registering bacteriological reduction processes.

(1) Manufacturers shall, for the purpose of product registration as described in WAC 246-272A-0110 and 246-272A-0120 for meeting treatment levels A, B, or C, verify bacteriological reduction performance by sampling for fecal coliform.

(a) For products not yet tested according to ANSI/NSF Standard 40 testing protocol dated July 1996 or later, the requirements of both ANSI/NSF Standard 40 and the protocol specified in subsection (2) of this section for verifying bacteriological reduction must be met.

(b) For products that have been tested according to ANSI/NSF Standard 40 dated July 1996 or later but have not yet been tested for bacteriological reduction, treatment performance of the treatment product or sequence may be established based on test results for $CBOD_5$ and TSS obtained from the previous ANSI/NSF Standard 40 testing and bacteriological reduction performance based on testing according to the protocol in subsection (2) of this section. Provided that the testing entity must verify the influent wastewater stream throughout the bacteriological testing period meets the influent threshold levels for $CBOD_5$ and TSS required by ANSI/NSF Standard 40 testing protocol.

(2) All test data submitted for product registration shall be produced by an ANSI accredited, third-party testing and certification organization whose accreditation is specific to on-site wastewater treatment products. Bacteriological reduction performance must be determined while the treatment product or sequence is tested according to the ANSI/NSF Standard 40 testing protocol. During this testing the following requirements apply:

(a) Collect samples from both the influent and effluent streams, identifying the treatment performance achieved by the full treatment process (component or sequence);

(b) Obtain influent characteristics falling within a range of 10^6 - 10^8 fecal coliform/100 mL calculated as thirty-day geometric means during the test.

(c) Test the influent to any disinfection unit and report the following at each occasion of sampling performed in (d) of this subsection:

(i) Flow rate;

(ii) pH;

(iii) Temperature;

(iv) Turbidity; and

(v) Color.

(d) Obtain samples for fecal coliform analysis during both the design loading and stress loading periods identified by NSF Standard 40. Grab samples shall be collected from both the influent and effluent on three separate days of the week. Each set of influent and effluent grab samples must be taken from a different dosing time frame (morning, afternoon, or evening) so that samples have been taken from each dosing time frame by the end of the week.

(e) Conduct analyses according to standard methods;

(f) Report the geometric mean of fecal coliform test results from all samples taken within thirty-day or monthly calendar periods;

(g) Report the individual results of all samples taken throughout the test period design and stress loading; and

(h) Report all maintenance and servicing conducted during the testing period, including for example, instances of cleaning a UV lamp, or replenishment of chlorine chemicals.

(3) Manufacturers may register products in treatment levels A and B using disinfection.

(4) Manufacturers may not register products for treatment level C using disinfection.

[Statutory Authority: RCW 43.20.050. WSR 06-01-020, § 246-272A-0130, filed 12/12/05, effective 1/12/06; WSR 05-15-119, § 246-272A-0130, filed 7/18/05, effective 9/15/05.]

WAC 246-272A-0135 Transition from the list of approved systems and products to the registered list—Bacteriological reduction. This section on how bacteriological reduction products on the list of approved systems and products can become registered.

(1) The department's list of approved systems and products shall:

(a) Become static on September 15, 2005. Subsequent changes, additions or deletions to the list of approved systems and products will only be made if approved by the department based on completed applications received prior to September 15, 2005.

(b) Remain in effect until March 15, 2007.

(2) Systems on the department's list of approved systems and products meeting the BOD_5 (or $CBOD_5$) and TSS requirements for treatment standards 1 and 2 may continue to be combined with disinfection equipment and methods specified by the on-site sewage system designer to meet or exceed the fecal coliform reduction performance required by treatment standards 1 and 2, until March 15, 2007.

(3) After March 15, 2007, the local health officer may permit only those treatment products registered as meeting bacteriological reduction portions of treatment level A, B, or C under the requirements of this chapter.

(4) Products that have been tested for bacteriological reduction and have met all the requirements of WAC 246-272A-0130, except the bacteriological influent and/or sampling frequency requirements, may be registered under this chapter to allow continued use of the product after March 15, 2007. In order to register their product, the manufacturer shall:

(a) Assure their product is on the department's list of approved systems and products that have been approved as meeting a bacteriological reduction standard on September 15, 2005, or subsequently added to the list as provided in subsection (1)(a) of this section;

(b) Apply for product registration before March 15, 2007; and

(c) Have their product tested for two additional months of testing using the testing protocol specified in WAC 246-272A-0130(2) to verify the bacteriological reduction performance.

[Statutory Authority: RCW 43.20.050. WSR 05-15-119, § 246-272A-0135, filed 7/18/05, effective 9/15/05.]

WAC 246-272A-0140 Proprietary distribution products—Certification and registration. (1) Manufacturers shall register proprietary distribution products, including

gravelless distribution products and subsurface dripline products, with the department before the local health officer may permit their use.

(2) Manufacturers desiring to sell proprietary distribution products shall certify that the product(s) meets the standards established in this chapter and register their product(s) with the department using the process described in WAC 246-272A-0145.

(3) Proprietary gravelless distribution products shall:

(a) Be constructed or manufactured from materials that are nondecaying and nondeteriorating and do not leach chemicals when exposed to sewage and the subsurface soil environment;

(b) Provide liquid storage volume at least equal to the storage volume provided within the thirty percent void space in a twelve-inch layer of drainrock in a drainrock-filled distribution system. This storage volume must be established by the gravelless distribution products, system design and installation and must be maintained for the life of the system. This requirement may be met on a lineal-foot, or on an overall system design basis;

(c) Provide suitable effluent distribution to the infiltrative surface at the soil interface; and

(d) Maintain the integrity of the trench or bed. The material used, by its nature and its manufacturer-prescribed installation procedure, must withstand the physical forces of the soil sidewalls, soil backfill and the weight of equipment used in the backfilling.

(4) Proprietary subsurface dripline products shall:

(a) Be warranted by the manufacturer for use with sewage and for resistance to root intrusion.

(b) Incorporate emitters with a maximum nominal rated discharge of 1.3 gallons per hour. Emitter discharge rate may be controlled either by use of pressure-compensating emitters or with a pressure regulator.

(c) Be color-coded purple to identify that the pipe contains nonpotable water from a sewage source.

[Statutory Authority: RCW 43.20.050. WSR 05-15-119, § 246-272A-0140, filed 7/18/05, effective 9/15/05.]

WAC 246-272A-0145 Proprietary distribution product registration—Process and requirements. (1) Manufacturers shall register their proprietary distribution product(s) with the department by submitting a complete application in the format provided by the department, including:

(a) Manufacturer's name, mailing address, street address, and phone number;

(b) Contact individual's name, mailing address, street address, and phone number. The contact individual must be vested with the authority to act as the agent of the manufacturer in this capacity;

(c) Name, including specific brand and model, of the proprietary distribution product;

(d) A description of the function of the proprietary distribution product along with any known limitations on its use;

(e) Product description and technical information, including schematics; materials and characteristics; component design specifications; design capacity, volumes and flow assumptions and calculations; components; dimensioned drawings and photos;

(f) Siting and installation requirements;

(g) Detailed description, procedure and schedule of routine service and system maintenance events;

(h) Identification of information subject to protection from disclosure of trade secrets;

(i) Copies of product brochures and manuals: *Sales & Promotional; Design; Installation; Operation & Maintenance; and Homeowner Instructions*;

(j) For gravelless chamber systems a quantitative description of the actual exposed trench-bottom infiltrative surface area for each model seeking registration;

(k) A statement from a professional engineer that certifies the technology meets the standards established in WAC 246-272A-0140;

(l) A signed and dated certification by the manufacturer's agent specifically including the following statement, "I certify that I represent (INSERT MANUFACTURING COMPANY NAME) and I am authorized to prepare or direct the preparation of this application for product registration. I attest, under penalty of law, that this document and all attachments, are true, accurate, and complete."

(m) A signed and dated certification from the licensed professional engineer including the statement, "I certify that I represent (INSERT PROFESSIONAL ENGINEERING FIRM NAME), that I am authorized to certify the performance characteristics for the proprietary distribution product presented in this application. I attest, under penalty of law, that the technology report is true, accurate, and complete."

(n) The fee established in WAC 246-272A-0990.

(2) Products within a single series or model line (sharing distinct similarities in design, materials, and capacities) may be registered under a single application. Products outside of the series or model line must be registered under separate applications.

(3) Upon receipt of an application the department shall:

(a) Verify that the application is complete;

(b) If complete, place the product on the list of proprietary distribution products.

(4) All registrations are valid for up to one year, expiring on December 31st of each year. Required fees are not prorated.

(5) In order to renew a proprietary distribution product registration, a manufacturer must:

(a) Apply for renewal of product registration using the form or in the format provided by the department;

(b) Provide an affidavit to the department verifying whether or not the product has changed over the previous year. If the product has changed, the affidavit must also include a full description of the changes. If the product has changed in a way that affects performance, the product may not be renewed and shall meet the requirements of initial registration; and

(c) Submit the fee established in WAC 246-272A-0990.

(6) As part of product registration renewal, the department shall:

(a) Request field assessment comments from local health officers no later than October 31st of each year. These comments may include concerns about a variety of field assessment issues, including product function, product reliability, and problems arising with operation and maintenance;

(b) Discuss with the TAC any field assessment information that may impact product registration renewal;

(c) Notify the manufacturer of any product to be discussed with the TAC, prior to discussion with the TAC, regarding the nature of comments received; and

(d) Renew the product registration unless:

(i) The manufacturer of a product does not apply for renewal; or

(ii) The department, after deliberation with the TAC, concludes product registration renewal should not be given or should be delayed until the manufacturer submits information that satisfactorily answers concerns and issues.

(7) The department shall maintain a list of proprietary distribution products meeting the registration requirements established in this chapter. Product registration is a condition of approval for use.

(8) Manufacturers shall have readily accessible information for designers, homeowners, regulators, system owners and other interested parties about their product including:

(a) Product manuals;

(b) Design instructions;

(c) Installation instructions;

(d) Operation and maintenance;

(e) Homeowner instructions; and

(f) A list of representatives and manufacturer certified service providers, if any.

[Statutory Authority: RCW 43.20.050. WSR 05-15-119, § 246-272A-0145, filed 7/18/05, effective 9/15/05.]

WAC 246-272A-0150 Transition from the list of approved systems and products to the registered list—Distribution products. (1) The department's list of approved systems and products shall:

(a) Become static on September 15, 2005. Subsequent changes, additions or deletions to the list of approved systems and products will only be made when approved by the department based on completed applications received prior to September 15, 2005.

(b) Remain in effect until March 15, 2007.

(2) Distribution products not on the department's list of approved systems and products on September 15, 2005, and not otherwise eligible for inclusion on the list by submittal of a completed application prior to September 15, 2005, must be registered with the department under this chapter before being permitted by the local health officer.

(3) Between September 15, 2005, and March 15, 2007, the local health officer may permit distribution products that are on the department's list of approved systems and products or registered by the department under the requirements of this chapter.

(4) After March 15, 2007, local health officers may only permit those distribution products registered under the requirements of this chapter.

(5) In order to be registered, manufacturers with distribution product models specified on the department's list of approved systems and products (excluding products being evaluated under the experimental systems program) on September 15, 2005, or subsequently added to the list as provided in subsection (1)(a) of this section, shall apply for product registration before March 15, 2007, using the following information:

(a) Manufacturers may apply for registration using the information previously provided to the department in support of product approval application, without further professional engineer certification.

(b) If product approval was based upon the performance information obtained through the department's former experimental systems program, the manufacturer may apply for registration as established by these rules using the performance test results obtained from their experimental system program, without further professional engineer certification. This provision is valid for only those models on the approved list of systems and products.

(c) Manufacturers and distribution products shall meet all other requirements established in these rules for product registration.

[Statutory Authority: RCW 43.20.050. WSR 05-15-119, § 246-272A-0150, filed 7/18/05, effective 9/15/05.]

WAC 246-272A-0170 Product development permits. (1) A local health officer may issue a product development permit (PDP) for any proprietary treatment component or sequence. In order to protect public health during the development period, a complete system meeting the requirements of this chapter and the site must be installed. The product under development may then be added to the treatment system allowing the product developer to gather data about the product's performance in the field. The PDP allows product developers to explore and develop new technologies prior to product testing and registration under WAC 246-272A-0110 and 246-272A-0120. The PDP is not an alternative to testing and registration.

(2) An application for a PDP shall include all of the following:

(a) Proof of an existing conforming system in compliance with all local requirements, or a permit for a conforming system. The conforming system must be installed in its entirety before the PDP becomes valid;

(b) A description of the product under development including performance goals and a description of how the system will be used to treat sewage;

(c) Documentation of financial assurance that will cover the correction of any potential public health threats or environmental damage resulting from the use of the product under development. Instruments of financial assurance include:

(i) An irrevocable letter of credit in the amount required by the local health officer issued by an entity authorized to issue letters of credit in Washington state;

(ii) Cash or security deposit payable to the local health jurisdiction in the amount required by the local health officer; or

(iii) Any other financial assurance that satisfies the local health officer.

(d) Documentation signed by the owner of the proposed product development site allowing access to the local health officer for inspection of the site; and

(e) Any other information required by the local health officer.

(3) The local health officer may stipulate additional requirements for a PDP necessary to assure the performance of the conforming system, including providing performance data to the local health officer.

(4) A PDP is a site-specific permit. Product development at multiple sites requires a PDP for each site.

(5) During the term of the PDP, product development, testing and sampling are under the full control of the product developer and all data collected is considered proprietary information.

(6) A PDP is valid for one year and may be renewed by the local health officer.

(7) The product development period is over when the original PDP or any subsequently renewed permits have expired. At this time the product developer:

(a) Shall, at the direction of the local health officer, remove the product under development from the site, reestablishing all appropriate plumbing and power connections for the conforming system.

(b) May subject the product to performance testing described in WAC 246-272A-0110 in order to allow the product to be eligible for registration with the department.

(8) The local health officer may revoke or amend a PDP:

(a) If the continued operation or presence of the product under development:

(i) Presents a risk to the public health or the environment;

(ii) Causes adverse effects on the proper function of the conforming system on the site; or

(iii) Leaks or discharges sewage on the surface of the ground.

(b) If the developer fails to comply with any requirements stipulated on the permit by the local health officer.

(9) The local health officer may charge fees adequate to administer the PDP program.

[Statutory Authority: RCW 43.20.050. WSR 05-15-119, § 246-272A-0170, filed 7/18/05, effective 7/1/07.]

WAC 246-272A-0175 Transition from the experimental system program to application for product registration. (1) The department's list of approved systems and products shall:

(a) Become static on September 15, 2005. Subsequent changes, additions or deletions to the list of approved systems and products will only be made when approved by the department based on completed applications received prior to September 15, 2005.

(b) Remain in effect until March 15, 2007.

(2) Persons representing experimental systems not on the department's list of approved systems and products on September 15, 2005, and not otherwise eligible for inclusion on the list by submittal of a completed application prior to September 15, 2005, may apply to a local health officer for a product development permit under WAC 246-272A-0170.

(3) Those persons representing experimental systems on the department's list of approved systems and products on September 15, 2005, may continue with the experimental testing according to the experimental testing protocol agreed to by the department until completed. Upon completion of the testing, the person may apply to the department for product registration under WAC 246-272A-0120 or 246-272A-0145. In considering the results of the experimental testing protocol, the department may seek a recommendation from the TAC. The department may determine:

(a) The product meets the requirements for registration and place it on the list of registered proprietary products; or

(b) The product does not meet the requirements for registration. Any further treatment product development and testing may continue under WAC 246-272A-0170, not under the department's previous experimental system program. The requirements of WAC 246-272A-0110, 246-272A-0130, or 246-272A-0140 apply to any further application for product registration.

[Statutory Authority: RCW 43.20.050. WSR 05-15-119, § 246-272A-0175, filed 7/18/05, effective 9/15/05.]

SPECIFIC REQUIREMENTS

WAC 246-272A-0200 Permit requirements. (1) Prior to beginning the construction process, a person proposing the installation, repair, modification, connection to, or expansion of an OSS, shall report the following and obtain a permit from the local health officer:

(a) General information including:

(i) Name and address of the property owner and the applicant at the head of each page of submission;

(ii) Parcel number and if available, the address of the site;

(iii) Source of drinking water supply;

(iv) Identification if the property is within the boundaries of a recognized sewer utility;

(v) Size of the parcel;

(vi) Type of permit for which application is being made, for example, new installation, repair, expansion, modification, or operational;

(vii) Source of sewage, for example, residence, restaurant, or other type of business;

(viii) Location of utilities;

(ix) Name of the site evaluator;

(x) Name, signature and stamp of the designer;

(xi) Date of application; and

(xii) Name and signature of the fee simple owner, the contract purchaser of the property or the owner's authorized agent.

(b) The soil and site evaluation as specified under WAC 246-272A-0220.

(c) A dimensioned site plan of the proposed initial system, the reserve area and those areas immediately adjacent that contain characteristics impacting design including:

(i) Designated areas for the proposed initial system and the reserve area;

(ii) The location of all soil logs and other soil tests for the OSS;

(iii) General topography and/or slope;

(iv) Drainage characteristics;

(v) The location of existing and proposed encumbrances affecting system placement, including legal access documents if any component of the OSS is not on the lot where the sewage is generated; and

(vi) An arrow indicating north.

(d) A detailed system design meeting the requirements under WAC 246-272A-0230, 246-272A-0232, 246-272A-0234, and 246-272A-0238 including:

(i) A drawing showing the dimensioned location of components of the proposed OSS, and the system designed for the

reserve area if reserve site characteristics differ significantly from the initial area;

(ii) Vertical cross-section drawings showing:

(A) The depth of the soil dispersal component, the vertical separation, and depth of cover material; and

(B) Other new OSS components constructed at the site.

(iii) Calculations and assumptions supporting the proposed design, including:

(A) System operating capacity and design flow;

(B) Soil type; and

(C) Hydraulic loading rate in the soil dispersal component; and

(e) Any additional information as deemed necessary by the local health officer.

(2) A permit is not required for replacement, addition, or modification of broken or malfunctioning building sewers, risers and lids, sewage tank lids, sewage tank baffles, sewage tank pumps, pump control floats, pipes connecting multiple sewage tanks, and OSS inspection boxes and ports where a sewage tank, treatment component, or soil dispersal component does not need to be replaced. The local health officer may require the owner to submit information regarding these activities for recordkeeping purposes.

(3) The local health officer may develop the information required in subsection (1) of this section if authorized by local regulations.

(4) The local health officer shall:

(a) Respond to an application within thirty days as required in RCW 70.05.074.

(b) Permit only public domain technologies that have departmental RS&G. Permit only proprietary products that are registered by the department. During the period of transition from the list of approved systems and products to the registered list, the local health officer may permit products on the list of approved systems and products.

(c) Issue a permit when the information submitted under subsection (1) of this section meets the requirements contained in this chapter and in local regulations;

(d) Identify the permit as a new installation, repair, expansion, modification, or operational permit;

(e) Specify the expiration date on the permit. The expiration date may not exceed five years from the date of permit issuance;

(f) Include a reminder on the permit application of the applicant's right of appeal; and

(g) If requiring an operational permit, state the period of validity and the date and conditions of renewal.

(5) The local health officer may revoke or deny a permit for just cause. Examples include, but are not limited to:

(a) Construction or continued use of an OSS that threatens the public health;

(b) Misrepresentation or concealment of material fact in information submitted to the local health officer; or

(c) Failure to meet conditions of the permit, this chapter or any local regulations.

(6) Before the local health officer issues a permit for the installation of an OSS to serve more than one development, the applicant shall show:

(a) An approved public entity owning or managing the OSS in perpetuity; or

(b) A management arrangement acceptable to the local health officer, recorded in covenant, lasting until the on-site system is no longer needed, and containing, but not limited to:

(i) A recorded easement allowing access for construction, operation, monitoring maintenance, and repair of the OSS; and

(ii) Identification of an adequate financing mechanism to assure the funding of operation, maintenance, and repair of the OSS.

(7) The local health officer shall not delegate the authority to issue permits.

(8) The local health officer may stipulate additional requirements for a particular permit if necessary for public health protection.

[Statutory Authority: RCW 43.20.050. WSR 05-15-119, § 246-272A-0200, filed 7/18/05, effective 7/1/07.]

WAC 246-272A-0210 Location. (1) Persons shall design and install OSS to meet the minimum horizontal separations shown in Table IV, Minimum Horizontal Separations:

Table IV
Minimum Horizontal Separations

Items Requiring Setback	From edge of soil dispersal component and reserve area	From sewage tank and distribution box	From building sewer, and nonperforated distribution pipe
Well or suction line	100 ft.	50 ft.	50 ft.
Public drinking water well	100 ft.	100 ft.	100 ft.
Public drinking water spring measured from the ordinary high-water mark	200 ft.	200 ft.	100 ft.
Spring or surface water used as drinking water source measured from the ordinary high-water mark[1]	100 ft.	50 ft.	50 ft.
Pressurized water supply line	10 ft.	10 ft.	10 ft.

Items Requiring Setback	From edge of soil dispersal component and reserve area	From sewage tank and distribution box	From building sewer, and nonperforated distribution pipe
Decommissioned well (decommissioned in accordance with chapter 173-160 WAC)	10 ft.	N/A	N/A
Surface water measured from the ordinary high-water mark	100 ft.	50 ft.	10 ft.
Building foundation/in-ground swimming pool	10 ft.	5 ft.	2 ft.
Property or easement line	5 ft.	5 ft.	N/A
Interceptor/curtain drains/foundation drains/drainage ditches			
Down-gradient[2]:	30 ft.	5 ft.	N/A
Up-gradient[2]:	10 ft.	N/A	N/A
Other site features that may allow effluent to surface			
Down-gradient[2]:	30 ft.	5 ft.	N/A
Up-gradient[2]:	10 ft.	N/A	N/A
Down-gradient cuts or banks with at least 5 ft. of original, undisturbed soil above a restrictive layer due to a structural or textural change	25 ft.	N/A	N/A
Down-gradient cuts or banks with less than 5 ft. of original, undisturbed soil above a restrictive layer due to a structural or textural change	50 ft.	N/A	N/A
Other adjacent soil dispersal components/subsurface storm water infiltration systems	10 ft.	N/A	N/A

[1] If surface water is used as a public drinking water supply, the designer shall locate the OSS outside of the required source water protection area.

[2] The item is down-gradient when liquid will flow toward it upon encountering a water table or a restrictive layer. The item is up-gradient when liquid will flow away from it upon encountering a water table or restrictive layer.

(2) If any condition indicates a greater potential for contamination or pollution, the local health officer may increase the minimum horizontal separations. Examples of such conditions include excessively permeable soils, unconfined aquifers, shallow or saturated soils, dug wells, and improperly abandoned wells.

(3) The local health officer may allow a reduced horizontal separation to not less than two feet where the property line, easement line, in-ground swimming pool, or building foundation is up-gradient.

(4) The horizontal separation between an OSS dispersal component and an individual water well, individual spring, or surface water that is not a public water source can be reduced to a minimum of seventy-five feet, by the local health officer, and be described as a conforming system upon signed approval by the health officer if the applicant demonstrates:

(a) Adequate protective site-specific conditions, such as physical settings with low hydro-geologic susceptibility from contaminant infiltration. Examples of such conditions include evidence of confining layers and/or aquatards separating potable water from the OSS treatment zone, excessive depth to groundwater, down-gradient contaminant source, or outside the zone of influence; or

(b) Design and proper operation of an OSS system assuring enhanced treatment performance beyond that accomplished by meeting the vertical separation and effluent distribution requirements described in WAC 246-272A-0230 Table VI; or

(c) Evidence of protective conditions involving both (a) and (b) of this subsection.

(5) Persons shall design and/or install a soil dispersal component only if:

(a) The slope is less than forty-five percent (twenty-four degrees);

(b) The area is not subject to:

(i) Encroachment by buildings or construction such as placement of power poles and underground utilities;

(ii) Cover by impervious material;

(iii) Vehicular traffic; or

(iv) Other activities adversely affecting the soil or the performance of the OSS.

(c) Sufficient reserve area for replacement exists to treat and dispose one hundred percent of the design flow;

(d) The land is stable; and

(e) Surface drainage is directed away from the site.

(6) The local health officer may approve a sewer transport line within ten feet of a water supply line if the sewer line is constructed in accordance with section C1-9 of the department of ecology's "*Criteria For Sewage Works Design*," December 1998.

[Statutory Authority: RCW 43.20.050. WSR 05-15-119, § 246-272A-0210, filed 7/18/05, effective 7/1/07.]

WAC 246-272A-0220 Soil and site evaluation. (1) Only professional engineers, designers, or local health officers may perform soil and site evaluations. Soil scientists may only perform soil evaluations.

(2) The person evaluating the soil and site shall:

(a) Report:

(i) A sufficient number of soil logs to evaluate conditions within:

(A) The initial soil dispersal component; and

(B) The reserve area.

(ii) The groundwater conditions, the date of the observation, and the probable maximum height;

(iii) The topography of the proposed initial system, the reserve area, and those areas immediately adjacent that contain characteristics impacting the design;

(iv) The drainage characteristics of the proposed initial system, the reserve area and those areas immediately adjacent that contain characteristics impacting the design;

(v) The existence of structurally deficient soils subject to major wind or water erosion events such as slide zones and dunes;

(vi) The existence of designated flood plains and other areas identified in the local management plan required in WAC 246-272A-0015; and

(vii) The location of existing features affecting system placement, such as, but not limited to:

(A) Wells and suction lines;

(B) Water sources and supply lines;

(C) Surface water and stormwater infiltration areas;

(D) Abandoned wells;

(E) Outcrops of bedrock and restrictive layers;

(F) Buildings;

(G) Property lines and lines of easement;

(H) Interceptors such as footing drains, curtain drains, and drainage ditches;

(I) Cuts, banks, and fills;

(J) Driveways and parking areas;

(K) Existing OSS; and

(L) Underground utilities;

(b) Use the soil and site evaluation procedures and terminology in accordance with Chapter 5 of the *On-site Wastewater Treatment Systems Manual*, EPA 625/R-00/008, February 2002 except where modified by, or in conflict with, this chapter (available upon request to the department);

(c) Use the soil names and particle size limits of the United States Department of Agriculture Natural Resources Conservation Service classification system;

(d) Determine texture, structure, compaction and other soil characteristics that affect the treatment and water movement potential of the soil by using normal field and/or laboratory procedures such as particle size analysis; and

(e) Classify the soil as in Table V, Soil Type Descriptions:

TABLE V

Soil Type Descriptions

Soil Type	Soil Textural Classifications
1	Gravelly and very gravelly coarse sands, all extremely gravelly soils excluding soil types 5 and 6, all soil types with greater than or equal to 90% rock fragments.
2	Coarse sands.
3	Medium sands, loamy coarse sands, loamy medium sands.
4	Fine sands, loamy fine sands, sandy loams, loams.
5	Very fine sands, loamy very fine sands; or silt loams, sandy clay loams, clay loams and silty clay loams with a moderate or strong structure (excluding platy structure).
6	Other silt loams, sandy clay loams, clay loams, silty clay loams.
7 Unsuitable for treatment or dispersal	Sandy clay, clay, silty clay, strongly cemented or firm soils, soil with a moderate or strong platy structure, any soil with a massive structure, any soil with appreciable amounts of expanding clays.

(3) The owner of the property or his agent shall:

(a) Prepare the soil log excavation to:

(i) Allow examination of the soil profile in its original position by:

(A) Excavating pits of sufficient dimensions to enable observation of soil characteristics by visual and tactile means to a depth three feet deeper than the anticipated infiltrative surface at the bottom of the soil dispersal component; or

(B) Stopping at a shallower depth if a water table or restrictive layer is encountered;

(ii) Allow determination of the soil's texture, structure, color, bulk density or compaction, water absorption capabilities or permeability, and elevation of the highest seasonal water table; and

(b) Assume responsibility for constructing and maintaining the soil log excavation in a manner to prevent injury as required by chapter 296-155 WAC.

(4) The local health officer:

(a) Shall render a decision on the height of the water table within twelve months of receiving the application under precipitation conditions typical for the region;

(b) May require water table measurements to be recorded during months of probable high-water table conditions, if insufficient information is available to determine the highest seasonal water table;

(c) May require any other soil and site information affecting location, design, or installation; and

(d) May reduce the required number of soil logs for OSS serving a single-family residence if adequate soils information has previously been developed.

[Statutory Authority: RCW 43.20.050. WSR 05-15-119, § 246-272A-0220, filed 7/18/05, effective 7/1/07.]

WAC 246-272A-0230 Design requirements—General. (1) On-site sewage systems may only be designed by professional engineers, licensed under chapter 18.43 RCW or on-site sewage treatment system designers, licensed under chapter 18.210 RCW, except:

(a) If at the discretion of the local health officer, a resident owner of a single-family residence not adjacent to a marine shoreline is allowed to design a system for that residence; or

(b) If the local health officer performs the soil and site evaluation, the health officer is allowed to design a system.

(2) The designer shall use the following criteria when developing a design for an OSS:

(a) All sewage from the building served is directed to the OSS;

(b) Sewage tanks have been reviewed and approved by the department;

(c) Drainage from the surface, footing drains, roof drains, subsurface stormwater infiltration systems, and other nonsewage drains is prevented from entering the OSS, the area where the OSS is located, and the reserve area;

(d) The OSS is designed to treat and disperse the sewage volume as follows:

(i) For single-family residences:

(A) The operating capacity is based on 45 gpd per capita with two people per bedroom.

(B) The minimum design flow per bedroom per day is the operating capacity of ninety gallons multiplied by 1.33. This results in a minimum design flow of one hundred twenty gallons per bedroom per day.

(C) A factor greater than 0.33 to account for surge capacity may be required by the local health officer.

(D) The local health officer may require an increase of the design flow for dwellings with anticipated greater flows, such as larger dwellings.

(E) The minimum design flow is two hundred forty gallons per day.

(ii) For other facilities, the design flows noted in "*On-site Wastewater Treatment Systems Manual*," USEPA, EPA-625/R-00/008, February 2002 (available upon request to the department) shall be used. Sewage flows from other sources of information may be used in determining system design flows if they incorporate both an operating capacity and a surge capacity.

(e) The OSS is designed to address sewage quality as follows:

(i) For all systems, the designer shall consider:

(A) $CBOD_5$, TSS, and O&G;

(B) Other parameters that can adversely affect treatment anywhere along the treatment sequence. Examples include pH, temperature and dissolved oxygen;

(C) The sensitivity of the site where the OSS will be installed. Examples include areas where fecal coliform constituents can result in public health concerns, such as shellfish growing areas, designated swimming areas, and other areas identified by the local management plan required in WAC 246-272A-0015.

(D) Nitrogen contributions. Where nitrogen has been identified as a contaminant of concern by the local management plan required in WAC 246-272A-0015, it shall be addressed through lot size and/or treatment.

(ii) For OSS treating sewage from a nonresidential source, the designer shall provide the following information:

(A) Information to show the sewage is not industrial wastewater;

(B) Information regarding the sewage quality and identifying chemicals found in the sewage that are not found in sewage from a residential source; and

(C) A site-specific design providing the treatment level equal to that required of sewage from a residential source;

(f) The vertical separation to be used to establish the treatment levels and application rates. The selected vertical separation shall be used consistently throughout the design process.

(g) Treatment levels:

(i) Requirements for matching treatment component and method of distribution with soil conditions of the soil dispersal component are listed in Table VI. The treatment levels correspond with those established for treatment components under the product performance testing requirements in Table III of WAC 246-272A-0110. The method of distribution applies to the soil dispersal component.

(ii) Disinfection may not be used to achieve the fecal coliform requirements to meet:

(A) Treatment levels A or B in Type 1 soils; or

(B) Treatment level C.

TABLE VI
Treatment Component Performance Levels and Method of Distribution[1]

Vertical Separation in inches	Soil Type		
	1	2	3-6
12 < 18	A - pressure with timed dosing	B - pressure with timed dosing	B - pressure with timed dosing
≥18 < 24	B - pressure with timed dosing	B - pressure with timed dosing	B - pressure with timed dosing
≥24 < 36	B - pressure with timed dosing	C - pressure	E - pressure
≥36 < 60	B - pressure with timed dosing	E - pressure	E - gravity
≥60	C - pressure	E - gravity	E - gravity

1The treatment component performance levels correspond with those established for treatment components under the product testing requirements in WAC 246-272A-0110.

(3) The coarsest textured soil within the vertical separation selected by the designer shall determine the minimum treatment level and method of distribution.

(4) The local health officer shall not approve designs for:

(a) Cesspools; or

(b) Seepage pits.

(5) The local health officer may approve a design for the reserve area different from the design approved for the initial OSS, if both designs meet the requirements of this chapter for new construction.

[Statutory Authority: RCW 43.20.050. WSR 05-15-119, § 246-272A-0230, filed 7/18/05, effective 7/1/07.]

WAC 246-272A-0232 Design requirements—Septic tank sizing. Septic tanks shall:

(1) Have at least two compartments with the first compartment liquid volume equal to one-half to two-thirds of the total liquid volume. This standard may be met by one tank with two compartments or by two single compartment tanks in series.

(2) Have the following minimum liquid volumes:

(a) For a single family residence use Table VII, Required Minimum Liquid Volumes of Septic Tanks:

TABLE VII
Required Minimum Liquid Volumes of Septic Tanks

Number of Bedrooms	Required Minimum Liquid Tank Volume in Gallons
≤3	900
4	1000
Each additional bedroom	250

(b) For OSS treating sewage from a residential source, other than one single-family residence, two hundred fifty gallons per bedroom with a minimum of one thousand gallons;

(c) For OSS treating sewage from a nonresidential source, three times the design flow.

[Statutory Authority: RCW 43.20.050. WSR 05-15-119, § 246-272A-0232, filed 7/18/05, effective 7/1/07.]

WAC 246-272A-0234 Design requirements—Soil dispersal components. (1) All soil dispersal components, except one using a subsurface dripline product, shall be designed to meet the following requirements:

(a) Maximum hydraulic loading rates shall be based on the rates described in Table VIII;

TABLE VIII
Maximum Hydraulic Loading Rate

Soil Type	Soil Textural Classification Description	Loading Rate for Residential Effluent Using Gravity or Pressure Distribution gal./sq. ft./day
1	Gravelly and very gravelly coarse sands, all extremely gravelly soils excluding soil types 5 & 6, all soil types with greater than or equal to 90% rock fragments.	1.0
2	Coarse sands.	1.0
3	Medium sands, loamy coarse sands, loamy medium sands.	0.8
4	Fine sands, loamy fine sands, sandy loams, loams.	0.6
5	Very fine sands, loamy very fine sands; or silt loams, sandy clay loams, clay loams and silty clay loams with a moderate structure or strong structure (excluding a platy structure).	0.4
6	Other silt loams, sandy clay loams, clay loams, silty clay loams.	0.2
7	Sandy clay, clay, silty clay and strongly cemented firm soils, soil with a moderate or strong platy structure, any soil with a massive structure, any soil with appreciable amounts of expanding clays.	Not suitable

(b) Calculation of the absorption area is based on:

(i) The design flow in WAC 246-272A-0230(2); and

(ii) Loading rates equal to or less than those in Table VIII applied to the infiltrative surface of the soil dispersal component or the finest textured soil within the vertical separation selected by the designer, whichever has the finest texture.

(c) Requirements for the method of distribution shall correspond to those in Table VI.

(d) Soil dispersal components having daily design flow between one thousand and three thousand five hundred gallons of sewage per day shall:

(i) Only be located in soil types 1-5;

(ii) Only be located on slopes of less than thirty percent, or seventeen degrees; and

(iii) Have pressure distribution including time dosing.

(2) All soil dispersal components using a subsurface dripline product must be designed to meet the following requirements:

(a) Calculation of the absorption area is based on:

(i) The design flow in WAC 246-272A-0230(2);

(ii) Loading rates that are dependent on the soil type, other soil and site characteristics, and the spacing of dripline and emitters;

(b) The dripline must be installed a minimum of six inches into original, undisturbed soil;

(c) Timed dosing; and

(d) Soil dispersal components having daily design flows greater than one thousand gallons of sewage per day may:

(i) Only be located in soil types 1-5;

(ii) Only be located on slopes of less than thirty percent, or seventeen degrees.

(3) All SSAS shall meet the following requirements:

(a) The infiltrative surface may not be deeper than three feet below the finished grade, except under special conditions approved by the local health officer. The depth of such system shall not exceed ten feet from the finished grade;

(b) A minimum of six inches of sidewall must be located in original undisturbed soil;

(c) Beds are only designed in soil types 1, 2, 3 or in fine sands with a width not exceeding ten feet;

(d) Individual laterals greater than one hundred feet in length must use pressure distribution;

(e) A layer of between six and twenty-four inches of cover material; and

(f) Other features shall conform with the "*On-site Wastewater Treatment Systems Manual*," United States Environmental Protection Agency EPA-625/R-00/008 February 2002 (available upon request to the department) except where modified by, or in conflict with this section or local regulations.

(4) For SSAS with drainrock and distribution pipe:

(a) A minimum of two inches of drainrock is required above the distribution pipe;

(b) The sidewall below the invert of the distribution pipe is located in original undisturbed soil.

(5) The local health officer may allow the infiltrative surface area in a SSAS to include six inches of the SSAS sidewall height when meeting the required absorption area where total recharge by annual precipitation and irrigation is less than twelve inches per year.

(6) The local health officer may permit systems consisting solely of a septic tank and a gravity SSAS in soil type 1 if all the following criteria are met:

(a) The system serves a single-family residence;

(b) The lot size is greater than two and one-half acres;

(c) Annual precipitation in the region is less than twenty-five inches per year as described by "*Washington Climate*" published jointly by the Cooperative Extension Service, College of Agriculture, and Washington State University (available for inspection at Washington state libraries);

(d) The system is located outside the twelve counties bordering Puget Sound; and

(e) The geologic conditions beneath the dispersal component must satisfy the minimum unsaturated depth requirements to groundwater as determined by the local health officer. The method for determination is described by "*Design Guideline for Gravity Systems in Soil Type 1*" (available upon request to the department).

(7) The local health officer may increase the loading rate in Table VIII up to a factor of two for soil types 1-4 and up to a factor of 1.5 for soil types 5 and 6 if a product tested to meet treatment level D is used. This reduction may not be combined with any other SSAS size reductions.

(8)(a) The primary and reserve areas must be sized to at least one hundred percent of the loading rates listed in Table VIII.

(b) However, the local health officer may allow a legal lot of record created prior to the effective date of this chapter that cannot meet this primary and reserve area requirement to be developed if all the following conditions are met:

(i) The lot cannot meet the minimum primary and reserve area requirements due to the loading rates for medium sand, fine sand and very fine sand listed in Table VIII of this chapter;

(ii) The primary and reserve areas are sufficient to allow installation of a SSAS using maximum loading rates of 1.0 gallons/square foot per day for medium sand, 0.8 gallons/square foot/day for fine sand, and 0.6 gallons/square foot/day for very fine sand; and

(iii) A treatment product meeting at least Treatment Level D and pressure distribution with timed-dosing is used.

[Statutory Authority: RCW 43.20.050. WSR 05-15-119, § 246-272A-0234, filed 7/18/05, effective 7/1/07.]

WAC 246-272A-0238 Design requirements—Facilitate operation, monitoring and maintenance. (1) The OSS must be designed to facilitate operation, monitoring and maintenance according to the following criteria:

(a) For gravity systems, septic tank access for maintenance and inspection at finished grade is required. If effluent filters are used, access to the filter at finished grade is required. The local health officer may allow access for maintenance and inspection of a system consisting of a septic tank and gravity flow SSAS to be a maximum of six inches below finished grade provided a marker showing the location of the tank access is installed at finished grade.

(b) For all other systems, service access and monitoring ports at finished grade are required for all system components. Specific component requirements include:

(i) Septic tanks must have service access manholes and monitoring ports for the inlet and outlet. If effluent filters are used, access to the filter at finished grade is required;

(ii) Surge, flow equalization or other sewage tanks must have service access manholes;

(iii) Other pretreatment units (such as aerobic treatment units and packed-bed filters) must have service access manholes and monitoring ports;

(iv) Pump chambers, tanks and vaults must have service access manholes;

(v) Disinfection units must have service access and be installed to facilitate complete maintenance and cleaning; and

(vi) Soil dispersal components shall have monitoring ports for both distribution devices and the infiltrative surface.

(c) For systems using pumps, clearly accessible controls and warning devices are required including:

(i) Process controls such as float and pressure activated pump on/off switches, pump-run timers and process flow controls;

(ii) Diagnostic tools including dose cycle counters and hour meters on the sewage stream, or flow meters on either the water supply or sewage stream; and

(iii) Audible and visual alarms designed to alert a resident of a malfunction. The alarm must be placed on a circuit independent of the pump circuit.

(2) All accesses must be designed to allow for monitoring and maintenance and shall be secured to minimize injury or unauthorized access in a manner approved by the local health officer.

[Statutory Authority: RCW 43.20.050. WSR 05-15-119, § 246-272A-0238, filed 7/18/05, effective 7/1/07.]

WAC 246-272A-0240 Holding tank sewage systems. (1) A person may not install or use holding tank sewage systems for residential development or expansion of residences, whether seasonal or year-round, except as set forth under subsection (2) of this section.

(2) The local health officer may approve installation of holding tank sewage systems only:

(a) For permanent uses limited to controlled, part-time, commercial usage situations, such as recreational vehicle parks and trailer dump stations;

(b) For interim uses limited to handling of emergency situations; or

(c) For repairs as permitted under WAC 246-272A-0280 (1)(c)(i).

(3) A person proposing to use a holding tank sewage system shall:

(a) Follow design criteria established by the department;

(b) Submit a management program to the local health officer assuring ongoing operation, monitoring and maintenance before the local health officer issues the installation permit; and

(c) Use a holding tank reviewed and approved by the department.

[Statutory Authority: RCW 43.20.050. WSR 05-15-119, § 246-272A-0240, filed 7/18/05, effective 7/1/07.]

WAC 246-272A-0250 Installation. (1) Only installers may construct OSS, except as noted under subsection (2) of this section.

(2) The local health officer may allow the resident owner of a single-family residence not adjacent to a marine shoreline to install the OSS for that single-family residence.

(3) The installer described by either subsection (1) or (2) of this section shall:

(a) Follow the approved design;

(b) Have the approved design in possession during installation;

(c) Make no changes to the approved design without the prior authorization of the designer and the local health officer;

(d) Only install septic tanks, pump chambers, and holding tanks approved by the department;

(e) Be on the site at all times during the excavation and construction of the OSS;

(f) Install the OSS to be watertight, except for the soil dispersal component;

(g) Cover the installation only after the local health officer has given approval to cover; and

(h) Back fill with six to twenty-four inches of cover material and grade the site to prevent surface water from accumulating over any component of the OSS.

[Statutory Authority: RCW 43.20.050. WSR 05-15-119, § 246-272A-0250, filed 7/18/05, effective 7/1/07.]

WAC 246-272A-0260 Inspection. (1) For all activities requiring a permit, the local health officer shall:

(a) Visit the OSS site during the site evaluation, construction, or final construction inspection;

(b) Either inspect the OSS before cover or allow the designer of the OSS to perform the inspection before cover if the designer is not also named as installer of the system.

(c) Keep the record drawings on file, with the approved design documents.

(2) The person responsible for the final construction inspection shall assure the OSS meets the approved design.

[Statutory Authority: RCW 43.20.050. WSR 05-15-119, § 246-272A-0260, filed 7/18/05, effective 7/1/07.]

WAC 246-272A-0265 Record drawings. Upon completion of the new construction, alteration or repair of the OSS, a complete and detailed record drawing shall be submitted to both the health officer and the OSS owner that includes at a minimum the following:

(1) Measurements and directions accurate to +/- 1/2 foot, unless otherwise determined by the local health officer, to assure the following parts of the OSS can be easily located:

(a) All sewage tank openings requiring access;

(b) The ends, and all changes in direction, of installed and found buried pipes and electrical cables that are part of the OSS; and

(c) Any other OSS component which, in the judgment of the health officer or the designer, must be accessed for observation, maintenance, or operation;

(2) Location and dimensions of reserve area;

(3) Record that materials and equipment meet the specifications contained in the design;

(4) Initial settings of electrical or mechanical devices that must be known to operate the system in the manner intended by the designer or installer; and

(5) For proprietary products, manufacturer's standard product literature, including performance specifications and maintenance recommendations needed for operation, monitoring, maintenance or repair of the OSS.

[Statutory Authority: RCW 43.20.050. WSR 05-15-119, § 246-272A-0265, filed 7/18/05, effective 7/1/07.]

WAC 246-272A-0270 Operation, monitoring, and maintenance—Owner responsibilities. (1) The OSS owner is responsible for operating, monitoring, and maintaining the OSS to minimize the risk of failure, and to accomplish this purpose, shall:

(a) Obtain approval from the local health officer before repairing, altering or expanding an OSS;

(b) Secure and renew contracts for periodic maintenance where required by the local health jurisdiction;

(c) Obtain and renew operation permits if required by the local health jurisdiction;

(d) Assure a complete evaluation of the system components and/or property to determine functionality, maintenance needs and compliance with regulations and any permits:

(i) At least once every three years for all systems consisting solely of a septic tank and gravity SSAS;

(ii) Annually for all other systems unless more frequent inspections are specified by the local health officer;

(e) Employ an approved pumper to remove the septage from the tank when the level of solids and scum indicates that removal is necessary;

(f) Provide maintenance and needed repairs to promptly return the system to a proper operating condition;

(g) Protect the OSS area and the reserve area from:

(i) Cover by structures or impervious material;

(ii) Surface drainage, and direct drains, such as footing or roof drains. The drainage must be directed away from the area where the OSS is located;

(iii) Soil compaction, for example by vehicular traffic or livestock; and

(iv) Damage by soil removal and grade alteration;

(h) Keep the flow of sewage to the OSS at or below the approved operating capacity and sewage quality;

(i) Operate and maintain systems as directed by the local health officer;

(j) Request assistance from the local health officer upon occurrence of a system failure or suspected system failure; and

(k) At the time of property transfer, provide to the buyer, maintenance records, if available, in addition to the completed seller disclosure statement in accordance with chapter 64.06 RCW for residential real property transfers.

(2) Persons shall not:

(a) Use or introduce strong bases, acids or chlorinated organic solvents into an OSS for the purpose of system cleaning;

(b) Use a sewage system additive unless it is specifically approved by the department; or

(c) Use an OSS to dispose of waste components atypical of sewage from a residential source.

[Statutory Authority: RCW 43.20.050. WSR 05-15-119, § 246-272A-0270, filed 7/18/05, effective 7/1/07.]

WAC 246-272A-0275 Operation, monitoring, and maintenance—Food service establishments. The local health officer shall require annual inspections of OSS serving food service establishments and may require pumping as needed.

[Statutory Authority: RCW 43.20.050. WSR 05-15-119, § 246-272A-0275, filed 7/18/05, effective 7/1/07.]

WAC 246-272A-0280 Repair of failures. (1) When an OSS failure occurs, the OSS owner shall:

(a) Repair or replace the OSS with a conforming system or component, or a system meeting the requirements of Table IX either on the:

(i) Property served; or

(ii) Nearby or adjacent property if easements are obtained; or

(b) Connect the residence or facility to a:

(i) Publicly owned LOSS;

(ii) Privately owned LOSS where it is deemed economically feasible; or

(iii) Public sewer; or

(c) Perform one of the following when requirements in (a) and (b) of this subsection are not feasible:

(i) Use a holding tank; or

(ii) Obtain a National Pollution Discharge Elimination System or state discharge permit from the Washington state department of ecology issued to a public entity or jointly to a public entity and the system owner only when the local health officer determines:

(A) An OSS is not feasible; and

(B) The only realistic method of final dispersal of treated effluent is discharge to the surface of the land or into surface water; or

(iii) Abandon the property.

(2) Prior to repairing the soil dispersal component, the OSS owner shall develop and submit information required under WAC 246-272A-0200(1).

(3) The local health officer shall permit a system that meets the requirements of Table IX only if the following are not feasible:

(a) Installation of a conforming system or component; and

(b) Connection to either an approved LOSS or a public sewer.

(4) The person responsible for the design shall locate and design repairs to:

(a) Meet the requirements of Table IX if the effluent treatment and soil dispersal component to be repaired or replaced is closer to any surface water, well, or spring than prescribed by the minimum separation required in Table IV of WAC 246-272A-0210(1). Pressure distribution with timed dosing in the soil dispersal component is required in all cases where a conforming system is not feasible.

TABLE IX
Treatment Component Performance Levels for Repair of OSS Not Meeting Vertical and Horizontal Separations[1]

Vertical Separation (in inches)	Horizontal Separation[2]											
	< 25 feet			25 < 50 feet			50 < 100 feet[3]			≥100 feet		
	Soil Type			Soil Type			Soil Type			Soil Type		
	1	2	3-6	1	2	3-6	1	2	3-6	1	2	3-6

< 12	A	A	A	A	A	A	A	A	B	B	B	B
≥ 12 < 18	A	A	A	A	B	B	A	B	B	Conforming Systems		
≥ 18 < 24	A	A	A	A	B	B	A	B	C			
≥ 24 < 36	A	B	B	B	C	C	B	C	C			
≥ 36	A	B	B	B	C	C	B	C	E			

[1]The treatment component performance levels correspond with those established for treatment components under the product performance testing requirements in Table III of WAC 246-272A-0110.

[2]The horizontal separation indicated in Table IX is the distance between the soil dispersal component and the surface water, well, or spring. If the soil dispersal component is up-gradient of a surface water, well, or spring to be used as a potable water source, or beach where shellfish are harvested, the next higher treatment level shall apply unless treatment level A is already required.

[3]On a site where there is a horizontal setback of 75 - 100 feet between an OSS dispersal component and an individual water well, individual spring, non-marine surface water or surface water that is not a public water source and a vertical separation of greater than twelve inches, a conforming system that complies with WAC 246-272A-0210(4) shall be installed if feasible.

(b) Protect drinking water sources and shellfish harvesting areas;

(c) Minimize nitrogen discharge in areas where nitrogen has been identified as a contaminant of concern in the local plan under WAC 246-272A-0015;

(d) Prevent the direct discharge of sewage to groundwater, surface water, or upon the surface of the ground;

(e) Meet the horizontal separations under WAC 246-272A-0210(1) to public drinking water sources;

(f) Meet other requirements of this chapter to the maximum extent permitted by the site; and

(g) Maximize the:

(i) Vertical separation;

(ii) Distance from a well, spring, or suction line; and

(iii) Distance to surface water.

(5) Prior to designing the repair system, the designer shall consider the contributing factors of the failure to enable the repair to address identified causes.

(6) If the vertical separation is less than twelve inches, the local health officer may permit ASTM C-33 sand or coarser to be used as fill to prevent direct discharge of treated effluent to groundwater, surface water, or upon the surface of the ground.

(7) For a repair using the requirements of Table IX, disinfection may not be used to achieve the fecal coliform requirements to meet:

(a) Treatment levels A or B where there is less than eighteen inches of vertical separation;

(b) Treatment levels A or B in type 1 soils; or

(c) Treatment level C.

(8) The local health officer shall identify repair permits meeting the requirements of Table IX for the purpose of tracking future performance.

(9) An OSS owner receiving a repair permit for a system meeting the requirements of Table IX from the local health officer shall:

(a) Immediately report any failure to the local health officer;

(b) Comply with all local and state requirements stipulated on the permit.

[Statutory Authority: RCW 43.20.050. WSR 05-15-119, § 246-272A-0280, filed 7/18/05, effective 7/1/07.]

WAC 246-272A-0290 Expansions. (1) The local health officer shall require an OSS and a reserve area in full compliance with the new system construction standards specified in this chapter for an expansion of a residence or other facility.

(2) A local health officer may allow expansion of an existing on-site sewage system adjacent to a marine shoreline that does not meet the minimum horizontal separation between the soil dispersal component and the ordinary high-water mark required by WAC 246-272A-0210, Table IV, provided that:

(a) The system meets all requirements of WAC 246-272A-0230, 246-272A-0232, 246-272A-0234, and 246-272A-0238;

(b) The system complies with all other requirements of WAC 246-272A-0210 and this section;

(c) Horizontal separation between the soil dispersal component and the ordinary high-water mark is fifty feet or greater; and

(d) Vertical separation is two feet or greater.

[Statutory Authority: RCW 43.20.050. WSR 05-15-119, § 246-272A-0290, filed 7/18/05, effective 7/1/07.]

WAC 246-272A-0300 Abandonment. Persons permanently abandoning a septic tank, seepage pit, cesspool, or other sewage container shall:

(1) Have the septage removed by an approved pumper;

(2) Remove or destroy the lid; and

(3) Fill the void with soil or gravel.

[Statutory Authority: RCW 43.20.050. WSR 05-15-119, § 246-272A-0300, filed 7/18/05, effective 7/1/07.]

WAC 246-272A-0310 Septage management. (1) The local health officer shall approve an individual before they may remove septage from an OSS.

(2) Persons removing septage from an OSS shall:

(a) Transport septage or sewage only in vehicles clearly identified with the name of the business and approved by the local health officer;

(b) Record and report septage removal as required by the local health officer; and

(c) Dispose of septage, or apply septage biosolids to land only in a manner consistent with applicable laws.

[Statutory Authority: RCW 43.20.050. WSR 05-15-119, § 246-272A-0310, filed 7/18/05, effective 7/1/07.]

WAC 246-272A-0320 Developments, subdivisions, and minimum land area requirements. (1) A person proposing a subdivision where the use of OSS is planned shall obtain a recommendation for approval from the local health officer as required by RCW 58.17.150.

(2) The local health officer shall require the following prior to approving any development:

(a) Site evaluations as required under WAC 246-272A-0220, excluding subsections (3)(a)(i) and (4)(d);

(b) Where a subdivision with individual wells is proposed:

(i) Configuration of each lot to allow a one hundred-foot radius water supply protection zone to fit within the lot lines; or

(ii) Establishment of a one hundred-foot protection zone around each existing and proposed well site;

(c) Where preliminary approval of a subdivision is requested, provision of at least one soil log per proposed lot, unless the local health officer determines existing soils information allows fewer soil logs;

(d) Determination of the minimum lot size or minimum land area required for the development using Method I and/or Method II:

METHOD I. Table X, Single-Family Residence Minimum Lot Size or Minimum Land Area Required Per Unit Volume of Sewage, shows the minimum lot size required per single-family residence. For developments other than single-family residences, the minimum land areas shown are required for each unit volume of sewage. However, the local health officer may require larger lot sizes where the local health officer has identified nitrogen as a concern either through planning activities described in WAC 246-272A-0015 or another process.

TABLE X
Minimum Land Area Requirement
Single-Family Residence or Unit Volume of Sewage

Type of Water Supply	Soil Type (defined by WAC 246-272A-0220)					
	1	2	3	4	5	6
Public	0.5 acre	12,500 sq. ft.	15,000 sq. ft.	18,000 sq. ft.	20,000 sq. ft.	22,000 sq. ft.
	2.5 acre[1]					
Individual, on each lot	1.0 acre	1 acre	1 acre	1 acre	2 acres	2 acres
	2.5 acres[1]					

[1]See WAC 246-272A-0234(6).

METHOD II. A minimum land area proposal using Method II is acceptable only when the applicant:

(i) Justifies the proposal through a written analysis of the:

(A) Soil type and depth;

(B) Area drainage, and/or lot drainage;

(C) Public health impact on ground and surface water quality;

(D) Setbacks from property lines, water supplies, etc.;

(E) Source of domestic water;

(F) Topography, geology, and ground cover;

(G) Climatic conditions;

(H) Availability of public sewers;

(I) Activity or land use, present, and anticipated;

(J) Growth patterns;

(K) Reserve areas for additional subsurface treatment and dispersal;

(L) Anticipated sewage volume;

(M) Compliance with current planning and zoning requirements;

(N) Types of proposed systems or designs, including the use of systems designed for removal of nitrogen;

(O) Existing encumbrances, such as those listed in WAC 246-272A-0200 (1)(c)(v) and 246-272A-0220 (2)(a)(vii); and

(P) Estimated nitrogen loading from OSS effluent to existing ground and surface water;

(Q) Any other information required by the local health officer.

(ii) Shows development with public water supplies having:

(A) At least twelve thousand five hundred square feet lot sizes per single-family residence;

(B) No more than 3.5 unit volumes of sewage per day per acre for developments other than single-family residences; and

(iii) Shows development with individual water supplies having at least one acre per unit volume of sewage; and

(iv) Shows land area under surface water is not included in the minimum land area calculation; and

(e) Regardless of which method is used for determining required minimum lot sizes or minimum land area, submittal to the health officer of information consisting of field data, plans, and reports supporting a conclusion the land area provided is sufficient to:

(i) Install conforming OSS;

(ii) Assure preservation of reserve areas for proposed and existing OSS;

(iii) Properly treat and dispose of the sewage; and

(iv) Minimize public health effects from the accumulation of contaminants in surface and groundwater.

(3) The department shall develop guidelines for the application of Method II by (*insert date one year from the effective date*).

(4) The local health officer shall require lot areas of twelve thousand five hundred square feet or larger except when a person proposes:

(a) OSS within the boundaries of a recognized sewer utility having a finalized assessment roll; or

(b) A planned unit development with:

(i) A signed, notarized, and recorded deed covenant restricting any development of lots or parcels above the approved density with the overall density meeting the minimum land area requirements of subsection (2)(d) of this section;

(ii) A public entity responsible for operation and maintenance of the OSS, or a single individual owning the OSS;

(iii) Management requirements under chapter 246-272B WAC when installing a LOSS; and

(iv) Extinguishment of the deed covenant and higher density development allowed only when the development connects to public sewers.

(5) The local health officer may:

(a) Allow inclusion of the area to the centerline of a road or street right of way in a Method II determination under subsection (2)(d) of this section to be included in the minimum land area calculation if:

(i) The dedicated road or street right of ways are along the perimeter of the development;

(ii) The road or street right of ways are dedicated as part of the proposed development; and

(iii) Lots are at least twelve thousand five hundred square feet in size.

(b) Require detailed plot plans and OSS designs prior to final approval of subdivision proposals;

(c) Require larger land areas or lot sizes to achieve public health protection;

(d) Prohibit development on individual lots within the boundaries of an approved subdivision if the proposed OSS design does not protect public health by meeting requirements of these regulations; and

(e) Permit the installation of an OSS, where the minimum land area requirements or lot sizes cannot be met, only when all of the following criteria are met:

(i) The lot is registered as a legal lot of record created prior to the effective date of this chapter;

(ii) The lot is outside an area identified by the local plan developed under WAC 246-272A-0015 where minimum land area has been listed as a design parameter necessary for public health protection; and

(iii) The proposed system meets all requirements of these regulations other than minimum land area.

(6) The use of a reduced-sized SSAS does not provide for a reduction in the minimum land area requirements established in this section. Site development incorporating reduced-sized SSAS must meet the minimum land area requirements established in state and local codes.

[Statutory Authority: RCW 43.20.050. WSR 05-15-119, § 246-272A-0320, filed 7/18/05, effective 7/1/07.]

WAC 246-272A-0340 Certification of installers, pumpers, and maintenance service providers. (1) OSS installers and pumpers must obtain approval from the local health officer prior to providing services within a local health jurisdiction.

(2) Local health officer may establish programs and requirements for approving maintenance service providers.

[Statutory Authority: RCW 43.20.050. WSR 05-15-119, § 246-272A-0340, filed 7/18/05, effective 7/1/07.]

WAC 246-272A-0400 Technical advisory committee. (1) The department shall:

(a) Maintain a technical advisory committee to advise the department regarding:

(i) OSS design and siting;

(ii) Public domain technologies and recommended standards and guidance for their use; and

(iii) Testing and design standards used for proprietary product registration and recommended standards and guidance for use of proprietary products.

(b) Select members for the technical advisory committee with technical or scientific knowledge applicable to OSS from agencies, professions, and organizations including:

(i) Local health departments;

(ii) Engineering firms;

(iii) The department of ecology;

(iv) Land sales, development and building industries;

(v) Public sewer utilities;

(vi) On-site sewage system design and installation firms;

(vii) Environmental organizations;

(viii) University/college academic communities;

(ix) On-site sewage system or related product manufacturers; and

(x) Other interested organizations or groups.

(c) Convene meetings as needed.

(2) The department may have a representative on the technical advisory committee.

[Statutory Authority: RCW 43.20.050. WSR 05-15-119, § 246-272A-0400, filed 7/18/05, effective 9/15/05.]

WAC 246-272A-0410 Policy advisory committee. (1) The department shall:

(a) Maintain a policy advisory committee to:

(i) Make recommendations concerning departmental policy and regulations;

(ii) Review program services; and

(iii) Provide input to the department regarding the on-site sewage program;

(b) Select members from agencies, professions, organizations having knowledge and interest in OSS, and groups which are affected by the regulations; and

(c) Convene meetings as needed.

(2) The department may have a representative on the policy advisory committee.

[Statutory Authority: RCW 43.20.050. WSR 05-15-119, § 246-272A-0410, filed 7/18/05, effective 9/15/05.]

WAC 246-272A-0420 Waiver of state regulations. (1) The local health officer may grant a waiver from specific requirements of this chapter if:

(a) The waiver request is evaluated by the local health officer on an individual, site-by-site basis;

(b) The local health officer determines that the waiver is consistent with the standards in, and the intent of, these rules;

(c) The local health officer submits quarterly reports to the department regarding any waivers approved or denied; and

(d) Based on review of the quarterly reports, if the department finds that the waivers previously granted have not been consistent with the standards in, and the intent of these rules, the department shall provide technical assistance to the local health officer to correct the inconsistency, and may notify the local and state boards of health of the department's concerns. If upon further review of the quarterly reports, the department finds that the inconsistency between the waivers granted and the state board of health standards has not been corrected, the department may suspend the authority of the local health officer to grant waivers under this section until such inconsistencies have been corrected.

(2) The department shall develop guidance to assist local health officers in the application of waivers.

[Statutory Authority: RCW 43.20.050. WSR 05-15-119, § 246-272A-0420, filed 7/18/05, effective 9/15/05.]

WAC 246-272A-0425 Required rule review. The department shall review this chapter to evaluate the effectiveness of the rules and determine areas where revisions may be necessary. The department will provide the results of their review along with their recommendations to the state board of health and all local health officers by September 2009 and every four years thereafter.

[Statutory Authority: RCW 43.20.050. WSR 05-15-119, § 246-272A-0425, filed 7/18/05, effective 9/15/05.]

WAC 246-272A-0430 Enforcement. (1) The department or the local health officer:

(a) Shall enforce the rules of chapter 246-272A WAC; or

(b) May refer cases within their jurisdiction to the local prosecutor's office or office of the attorney general, as appropriate.

(2) When a person violates the provisions under this chapter, the department, local health officer, local prosecutor's office, or office of the attorney general may initiate enforcement or disciplinary actions, or any other legal proceeding authorized by law including, but not limited to, any one or a combination of the following:

(a) Informal administrative conferences, convened at the request of the department or owner, to explore facts and resolve problems;

(b) Orders directed to the owner and/or operator of the OSS and/or person causing or responsible for the violation of the rules of chapter 246-272A WAC;

(c) Denial, suspension, modification, or revocation of permits, approvals, registrations, or certification;

(d) The penalties under chapter 70.05 RCW and RCW 43.70.190; and

(e) Civil or criminal action.

(3) Orders authorized under this section include the following:

(a) Orders requiring corrective measures necessary to effect compliance with chapter 246-272A WAC which may include a compliance schedule; and

(b) Orders to stop work and/or refrain from using any OSS or portion of the OSS or improvements to the OSS until all permits, certifications, and approvals required by rule or statute are obtained.

(4) Enforcement orders issued under this section shall:

(a) Be in writing;

(b) Name the person or persons to whom the order is directed;

(c) Briefly describe each action or inaction constituting a violation of the rules of chapter 246-272A WAC, or applicable local code;

(d) Specify any required corrective action, if applicable;

(e) Specify the effective date of the order, with time or times of compliance;

(f) Provide notice of the consequences of failure to comply or repeated violation, as appropriate. Such notices may include a statement that continued or repeated violation may subject the violator to:

(i) Denial, suspension, or revocation of a permit approval, or certification;

(ii) Referral to the office of the county prosecutor or attorney general; and/or

(iii) Other appropriate remedies.

(g) Provide the name, business address, and phone number of an appropriate staff person who may be contacted regarding an order.

(5) Enforcement orders shall be personally served in the manner of service of a summons in a civil action or in a manner showing proof of receipt.

(6) The department shall have cause to deny the application or reapplication for an operational permit or to revoke, suspend, or modify a required operational permit of any person who has:

(a) Failed or refused to comply with the provisions of chapter 246-272A WAC, or any other statutory provision or rule regulating the operation of an OSS; or

(b) Obtained or attempted to obtain a permit or any other required certificate or approval by misrepresentation.

(7) For the purposes of subsection (6) of this section and WAC 246-272A-0440, a person is defined to include:

(a) Applicant;

(b) Reapplicant;

(c) Permit holder; or

(d) Any individual associated with (a), (b) or (c) of this subsection including, but not limited to:

(i) Board members;

(ii) Officers;

(iii) Managers;

(iv) Partners;

(v) Association members;

(vi) Agents; and

(vii) Third persons acting with the knowledge of such persons.

[Statutory Authority: RCW 43.20.050. WSR 05-15-119, § 246-272A-0430, filed 7/18/05, effective 9/15/05.]

WAC 246-272A-0440 Notice of decision—Adjudicative proceeding. (1) All local boards of health shall:

(a) Maintain an administrative appeals process to consider procedural and technical conflicts arising from the administration of local regulations; and

(b) Establish rules for conducting hearings requested to contest a local health officer's actions.

(2) The department shall provide notice of the department's denial, suspension, modification or revocation of a permit, certification, or approval consistent with RCW 43.70.115, chapter 34.05 RCW, and chapter 246-10 WAC.

(3) A person contesting a departmental decision regarding a permit, certificate, or approval may file a written request for an adjudicative proceeding consistent with chapter 246-10 WAC.

(4) Department actions are governed under the Administrative Procedure Act chapter 34.05 RCW, RCW 43.70.115, this chapter, and chapter 246-10 WAC.

[Statutory Authority: RCW 43.20.050. WSR 05-15-119, § 246-272A-0440, filed 7/18/05, effective 9/15/05.]

WAC 246-272A-0450 Severability. If any provision of this chapter or its application to any person or circumstances is held invalid, the remainder of this chapter, or the application of the provision to other persons or circumstances shall not be affected.

[Statutory Authority: RCW 43.20.050. WSR 05-15-119, § 246-272A-0450, filed 7/18/05, effective 9/15/05.]